FIRST QUARTERLY PROGRESS REPORT

on

DEVELOPMENT OF IMPROVED THERMOELECTRIC MATERIALS FOR SPACECRAFT APPLICATIONS

to

GEORGE C. MARSHALL
SPACE FLIGHT CENTER
NATIONAL AERONAUTICS AND
SPACE ADMINISTRATION

October 21, 1964

Contract No. NAS8-11452
Control No. DCN 1-4-50-01159-01 & S1 (1F)
CPB 02-1200-64

For the Period
June 29 to October 1, 1964

by

E. P. Stambaugh, L. K. Matson, B. G. Koehl,
R. Simon, and E. H. Lougher

BATTELLE MEMORIAL INSTITUTE
505 King Avenue
Columbus, Ohio 43201

TABLE OF CONTENTS

	Page
INTRODUCTION	1
ABSTRACT	1
WORK ACCOMPLISHED DURING THIS PERIOD	2
Experimental Investigation	2
Ternary Compounds	3
Bismuth-Antimony Alloys	7
Theoretical Investigations	14
Single-Band Conduction	15
$\sigma_o$exp r Analysis	16
Scattering Mechanism Considerations	19
Conclusion	20
ANTICIPATED WORK	20
REFERENCES	21

BATTELLE MEMORIAL INSTITUTE

(1) Theoretical Study

(2) Experimental Study
(Thermoelectric Cooling)

(a) Preparation and Evaluation of Ag (Fe, Sb) $(Se, Te)_y$ Ternaries

(b) Preparation and Evaluation of Ag Sb_k Fe_ℓ Se_m Te_n Alloys

(c) Preparation and Evaluation of n-p Couples of Promising Alloy(s)

(d) Optimization of n- and p-Type Bi-Sb Alloys for Low-Temperature Cooling

(3) Final Report (Preparation, Submission, and Approval)

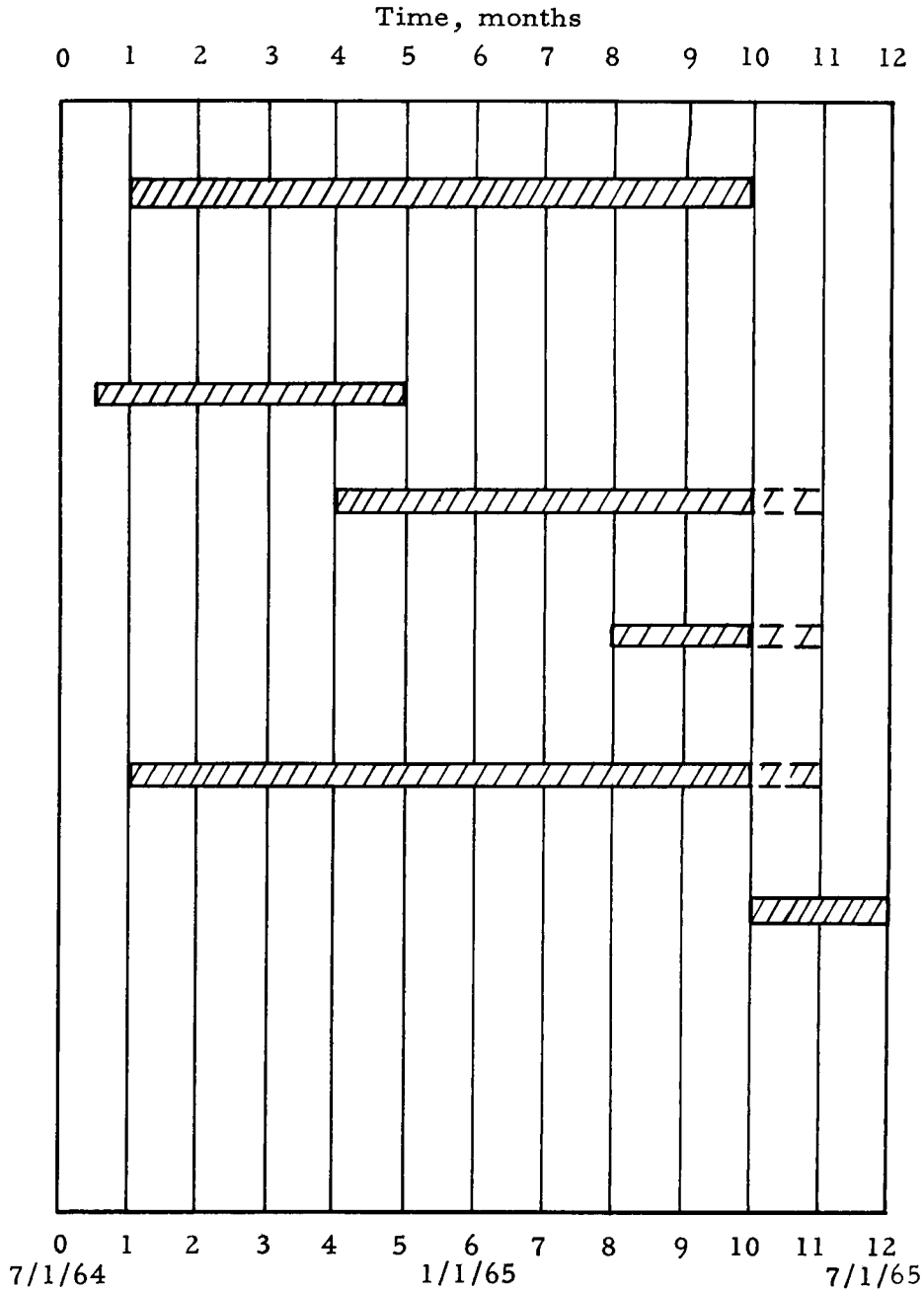

PROGRAM-PLANNING CHART

DEVELOPMENT OF IMPROVED THERMOELECTRIC MATERIALS FOR SPACECRAFT APPLICATIONS

by

E. P. Stambaugh, L. K. Matson, B. G. Koehl,
R. Simon, and E. H. Lougher

INTRODUCTION

This is the First Quarterly Progress Report on the project, "Development of Improved Thermoelectric Materials for Spacecraft Applications", covering the period from June 29 to October 1, 1964. The program, outlined in PR DCN 1-4-50-01159-01 & S1 and in Battelle's proposal dated June 4, 1964, is being carried out under Contract NAS8-11452. The work is a continuation of that conducted by Ohio Semiconductors Division, Tecumseh Products Company, under Contract NAS8-11075.

The objective of this research is the study and optimization of selected materials for use in thermoelectric and thermomagnetic cooling in a space environment. The materials to be investigated are Bi-Sb alloys and alloys in the Ag-Sb-Fe-Te-Se system.

ABSTRACT

17527 OVER

During this period, experimental effort was devoted to the preparation and evaluation $Bi_{85-88}Sb_{12-15}$* alloys (n- and p-types) and single-phase ternaries in the $Ag(Fe,Sb)_x(Se,Te)_y$ system. Theoretical work was devoted to correlation of the ionicity concept with the theory of the fundamental semiconductor characteristics that determine thermoelectric performance.

Large single crystals of n- and p-type Bi-Sb alloys were prepared by zone levelling at a crystallization rate of 3.2 cm per hour. An n-type, undoped specimen containing 14.61 atomic percent Sb was found to have a figure or merit of $3.79 \times 10^{-3}/°K$ at 80°K. Measurements are being conducted on a p-type (tin-doped) specimen having the composition $Bi_{82.8}Sb_{13.8}Sn_{3.4}$*.

Single-phase $AgSbSe_2$ was prepared by the furnace cool-anneal method. A specimen from this ingot had Seebeck coefficient and resistivity values at 300°K of 450 $\mu V/°K$ and 3.0 ohm-cm, respectively, and probably was intrinsic. Doping studies will be required to determine the capability of the material for thermoelectric use. The other ternaries, $AgSbTe_2$, $AgFeTe_2$, and $AgFeSe_2$, prepared by this method were polyphase; the $AbSbTe_2$ contained only a small amount of a second phase, but the $AgFeSe_2$ and $AgFeTe_2$ specimens each contained two phases of approximately equal concentration. Ingots of $AgSbTe_2$ and $AgFeTe_2$ prepared by zone levelling-zone refining are being evaluated.

*Subscripts are atomic percentages.

The relationships between the pertinent dimensionless energy-band structure and scattering parameters and the maximum figure of merit that can be attained by impurity doping of an essentially single-band material are reviewed in this report. Suchet's ionicity-parameter criteria for selecting potential thermoelectric materials have been examined in the light of these relationships. The conclusion is reached that these criteria are not likely to be useful for material selection. This tentative conclusion remains to be verified or modified on the basis of correlations between the results of the band-structure and ionicity criteria when applied to materials with known thermoelectric properties.

Author

WORK ACCOMPLISHED DURING THIS PERIOD

During this period, experimental and theoretical studies were directed toward development of improved thermoelectric materials for spacecraft applications. Experimental work was concerned with evaluating the Ag-Sb-Te and Bi-Sb alloy systems. The theoretical effort was concerned with correlation of the ionicity concept with the theory, developed previously at Battelle and elsewhere, of the interrelation of fundamental semiconductor characteristics (band gap, degree of doping, symmetry of band structure, etc.) with thermoelectric performance parameters.

Experimental Investigation

In evaluating a system for possible thermoelectric applications, it is important to conduct the electrical measurements on specimens that are homogeneous and single phase. Attainment of single-crystal specimens is desirable, of course, but this requirement is not nearly so important as that of homogeneity and single-phase composition, since electrical measurements conducted on inhomogeneous, polyphase specimens can be misleading. As a matter of fact, it is impossible to determine with confidence the the potentiality of a system for thermoelectric-cooling applications from data collected from inhomogeneous materials.

A high degree of inhomogeneity in a material leads to a lower figure-of-merit value than if the material is homogeneous.[1,2]* The lower figure of merit for an inhomogeneous material results from an increase in the thermal conductivity and a decrease in the Seebeck coefficient by the circulating-current effect, as discussed below.

Consider an idealized inhomogeneous specimen consisting of Regions 1 and 2 of different composition, as illustrated in Figure 1. If a temperature gradient is imposed across the specimen as shown, circulating currents (indicated by arrows) will be set up as a result of the difference in Seebeck coefficient between the two regions. As the currents cross the boundaries between the two regions at the high-temperature end ($T + \Delta T$), heat is absorbed by the Peltier effect. As they cross the boundaries at the low-temperature end (T), heat is evolved by the Peltier effect. This effect increases the effective thermal conductivity of the material. Such behavior has been observed in Bi_2Te_3-Bi_2Se_3 alloys[3], $BiSbTe_3$[4], $AgSbTe_2$[5], etc. In each semiconductor compound or alloy, the more homogeneous specimens exhibited the best thermoelectric properties.

*References are listed at the end of the report.

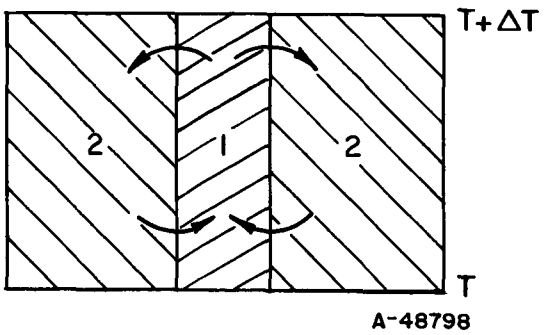

FIGURE 1. CIRCULATING CURRENTS RESULTING FROM INHOMOGENEITIES

Other transport properties also are sensitive to inhomogeneities in materials. Thus, in determining the transport properties of any system, the importance of the homogeneity of the specimens can be an overriding factor. Therefore, throughout this investigation, effort is being directed toward the preparation and evaluation of single-phase compounds and alloys.

Ternary Compounds

Preparation. This program is concerned partially with evaluation of Ag-Sb-Te alloys and more complex materials derived by partial substitution of Fe and Se in the Ag-Sb-Te alloy lattice. For guidance in development of these complex materials, data are needed on the properties of single-phase specimens of ternary compounds in the $Ag(Fe,Sb)_x(Se,Te)_y$ system.

During this period, three methods were used in an effort to prepare single-phase specimens of $AgSbTe_2$, $AgFeTe_2$, and $AgFeSe_2$. These were (1) furnace cool-anneal, (2) quench-anneal, and (3) a combination of zone levelling and zone refining. These methods are variants of the direct reaction-melt crystallization technique of material preparation. They have been used extensively at Battelle to prepare single-phase, homogeneous specimens of semiconductor compounds and alloys.

The furnace cool-anneal method consists of (1) reacting the elements, sealed in an evacuated quartz ampoule, at a temperature above the melting point of the compound, (2) homogenizing by thorough mixing, while maintaining this temperature for several hours, (3) crystallizing slowly by turning off electric power to the furnace, and allowing the furnace to cool to the annealing temperature ("furnace cooling"), (4) annealing the resulting ingot at this temperature, and (5) cooling the ingot to room temperature. The quench-anneal method of preparation is similar to the furnace cool-anneal method, except that the melt is solidified by quenching in air or water rather than by a furnace cool. Thus, the rate of crystallization is more rapid; crystallites are smaller, but less segregation usually results. In both methods, decomposition of a compound at the melting point by the loss of volatile components is minimized by using a specimen ampoule having as little free space as possible and also by maintaining a uniform temperature along the ampoule to avoid transfer of volatile components by distillation from one part of the ingot to another.

Single-phase material can be prepared by the above methods only if the gross composition of the ingot is within the stable composition region of the solid at the melting point (or at the annealing temperature). If the overall composition of an ingot is outside this region, single-phase material sometimes can be made by zone refining the ingot, since material which is not soluble in the solid major phase at the melting point may tend to be moved to the ends of the ingot, leaving the center section more nearly homogeneous. In the preparation of ternaries by zone refining during this report period, the zone refining was preceded by several zone-levelling passes (i.e., alternating the direction of movement of the molten zone) to mix the elements thoroughly before zone refining was started.

Since the ternaries under study tend to lose volatile components (arsenic, selenium, and tellurium) during preparation, it is necessary to provide a high ambient temperature for the zone levelling-zone refining apparatus to prevent condensation of these components on the walls of the tube containing the material. For this purpose, the apparatus shown in Figure 2 was set up. In this equipment, each furnace is controlled independently of the others. Furnaces 1 and 3 are used to control the vapor pressure of the volatile component, and Furnace 2 is used to melt the compound. The temperature of the end furnaces is regulated by Thermocouples 1 and 2 and that of the center furnace by a Variac and constant-voltage regulator. A graphite sleeve is placed in each end furnace to minimize temperature gradients.

The procedure for material preparation by zone levelling-zone refining was to (1) react the elements in a quartz boat enclosed in an evacuated quartz tube, (2) furnace cool to room temperature, (3) transfer the boat to the zone levelling-refining apparatus, (4) homogenize the ingot by making several zone-levelling passes, and finally, (5) zone refinine to remove minor phases.

The conditions under which the ternaries were prepared by the three methods described above are shown in Tables 1 and 2. Generally, the elements were not heated immediately to the melting point of the compound, but they were heated stepwise to promote partial reaction at temperatures below the melting point; many of these reactions are exothermic and rapid heating would result in the development of excessive temperatures. This may cause explosions as a result of the high vapor pressures attained.

TABLE 1. CONDITIONS OF PREPARATION OF TERNARIES BY QUENCH-ANNEAL AND FURNACE COOL-ANNEAL METHODS

		Reaction Conditions		Annealing Conditions		
Ingot	Composition	Temp[a], °C	Time, hr	Temp, °C	Time, hr	Method
21561-1	$AgSbTe_2$	715	68	500	24	Q-A[b]
-3	$AgSbSe_2$	705	70	525	16	FC-A[c]
-4	$AgFeTe_2$	742	22	500	22	FC-A
-6	$AgFeSe_2$	745	48	505	65	FC-A

(a) The elements were first heated at 500 to 600°C for several hours before heating to these temperatures.
(b) Quench-anneal.
(c) Furnace cool-anneal.

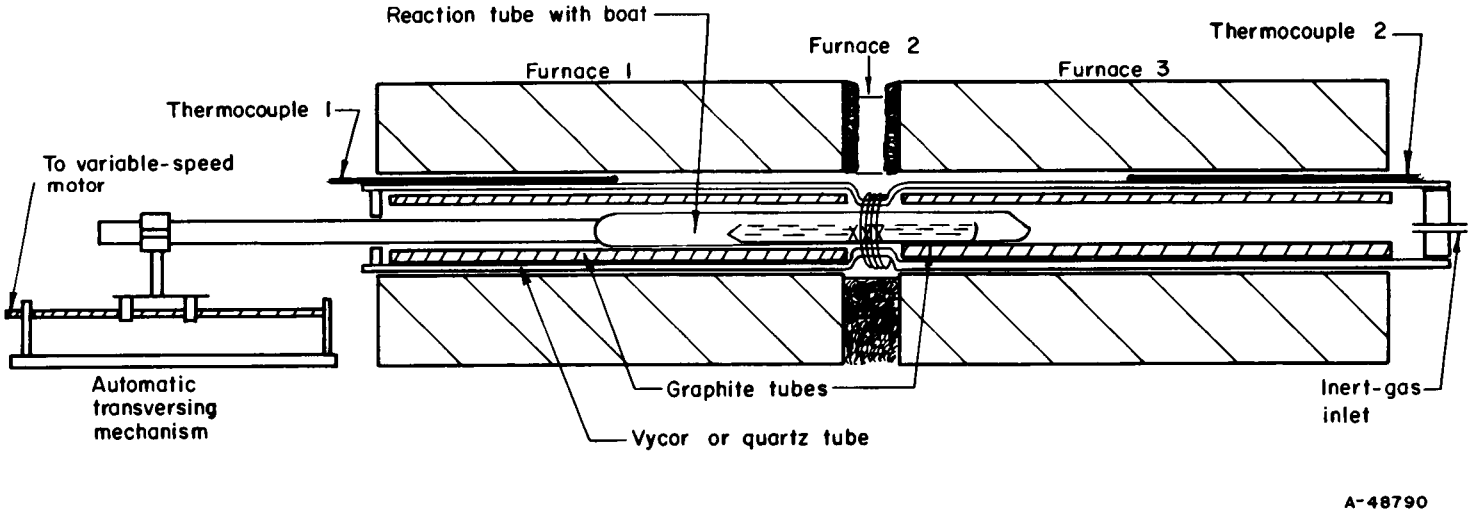

FIGURE 2. ZONE LEVELLING – ZONE REFINING APPARATUS

TABLE 2. CONDITIONS OF PREPARATION OF TERNARIES BY ZONE LEVELLING-ZONE REFINING

		Reaction Conditions		Zoning Conditions			
				Furnace Temperatures, °C			
Ingot	Composition	Temp, °C	Time, hr	Furnaces 1 and 3	Furnace 2	No. of Zone-Levelling Passes	No. of Zone-Refining Passes
21561-16	$AgSbTe_2$	500	3	500	600	4	12
		650	46				
		720	90				
21561-37	$AgFeTe_2$	535	15	605	800	4	11
		730	45				

Evaluation. Preliminary evaluation of each ingot is made by metallographic examination and by measurement of approximate values of the Seebeck coefficient and resistivity at various points along the ingot by the thermoelectric hot-probe and four-probe resistivity methods.* More detailed measurements are made on specimens that appear to have interesting properties and adequate homogeneity.

Metallographic examination of a specimen from each of the ingots prepared by the furnace cool-anneal or quench-anneal methods (Table 1) revealed that (1) the $AgSbSe_2$ was single phase, (2) the $AgSbTe_2$ contained a small amount of a second phase, and (3) the $AgFeSe_2$ and $AgFeTe_2$ each contained two phases of approximately equal concentration. The composition of the various phases was not determined. Differential-thermal-analysis data agreed well with the above metallographic examination; a single melting point was observed for $AgSbSe_2$, but two were noted for each of the other compositions, as shown in Table 3. Several other thermal breaks, indicating solid-solid transformations, also were noted (Table 1). The temperatures at which the breaks occurred in two of the materials, $AgFeTe_2$ and $AgFeSe_2$, depended upon whether the temperature was increasing or decreasing. The reason for this behavior has not been determined. The break observed for the $AgSbTe_2$ specimen at 140°C agrees with a published value for a transition at 137°C.[6]

Metallographic examination of the ingots prepared by zone levelling-zone refining is in progress.

* These are rapid techniques for obtaining approximate values of Seebeck coefficient and resistivity at several points on a specimen. The hot-probe method is based upon the deflection of a calibrated galvanometer connected between two probes – one heated, the other at room temperature – placed in contact with the specimen. The sign and magnitude of the deflection indicate the conductivity type and the approximate value of the Seebeck coefficient. The four-probe technique employs four closely spaced point probes in a row, which are placed in contact with the specimen. Current is passed between the two end probes, and the potential drop between the inner pair is measured. The resistivity can be calculated from the values of the current and potential drop and the probe spacing.

TABLE 3. PROPERTIES OF TERNARIES

Ingot	Composition	Thermal Breaks Other Than Melting Points, °C	Melting Point, °C	Approximate Seebeck Coefficient, μV/°K	Approximate Resistivity, ohm-cm
21561-1	$AgSbTe_2$	65, 140	540, 558	+230 to +260	$9.6\text{-}19 \times 10^{-3}$
21561-3	$AgSbSe_2$	--	633	+50 to +500 (mostly +300 to +400)	4.4 to 4.7
21561-4	$AgFeTe_2$	148, 474[a], 519[b]	675, 695	+52 to +72	$1.9\text{-}4.1 \times 10^{-3}$
21561-6	$AgFeSe_2$	541[a], 550[b], 563[a]	695, 730	Phase A: +32 to +80 Phase B: -8	$3\text{-}8.5 \times 10^{-3}$

(a) Obtained with decreasing temperature.
(b) Obtained with increasing temperature.

Approximate values of the Seebeck coefficients and resistivity* of the ternaries prepared by furnace cool-anneal and quench-anneal methods are shown in Table 3; these properties of ternaries prepared by zone levelling-zone refining are shown in Figures 3 and 4. More detailed electrical measurements made on a single-phase specimen of $AgSbSe_2$ are shown in Figure 5.

The wide range of Seebeck-coefficient and resistivity values obtained on specimens prepared as shown in Table 1 may indicate the high degree of inhomogeneity as seen by metallographic examination. Although metallographic examination of those ingots prepared by zone levelling-zone refining has not yet been made, there are sections within the ingots that exhibit more uniform Seebeck coefficient and resistivity values (Figures 3 and 4). This may indicate that these areas are single phase. Further studies will be made on these materials.

From the electrical measurements conducted on a single-phase specimen of $AgSbSe_2$ (Figure 5), it appears that this specimen probably is intrinsic. The resistivity is too high for the material, as prepared, to be useful for thermoelectric-cooling applications. Doping experiments will be required to evaluate the compound.

Plans for this system call for continued effort to prepare and evaluate more homogeneous, single-phase ternary compounds.

Bismuth-Antimony Alloys

In the study of bismuth-antimony alloys for thermoelectric applications, it is necessary to measure the Seebeck coefficient and the electrical and thermal conductivities along the three-fold (trigonal) symmetry axis, the direction of highest figure of merit. Thus, single-crystal measurement specimens are required, with the long

*Measured by the hot-probe and four-probe methods.

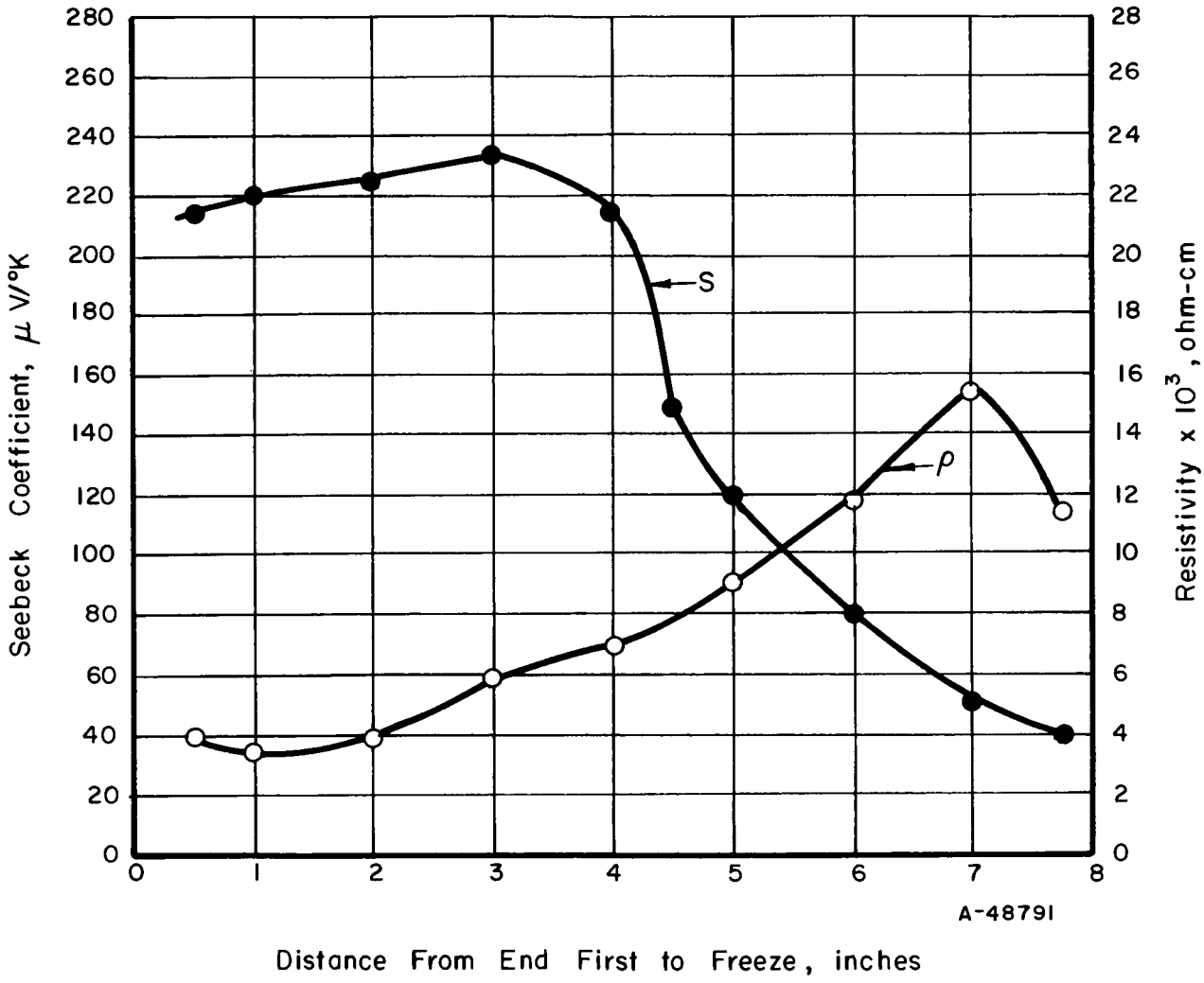

FIGURE 3. SEEBECK COEFFICIENT AND RESISTIVITY AS FUNCTIONS OF POSITION ALONG A ZONE LEVELLED - ZONE REFINED $AgSbTe_2$ INGOT (NO. 21561-16)

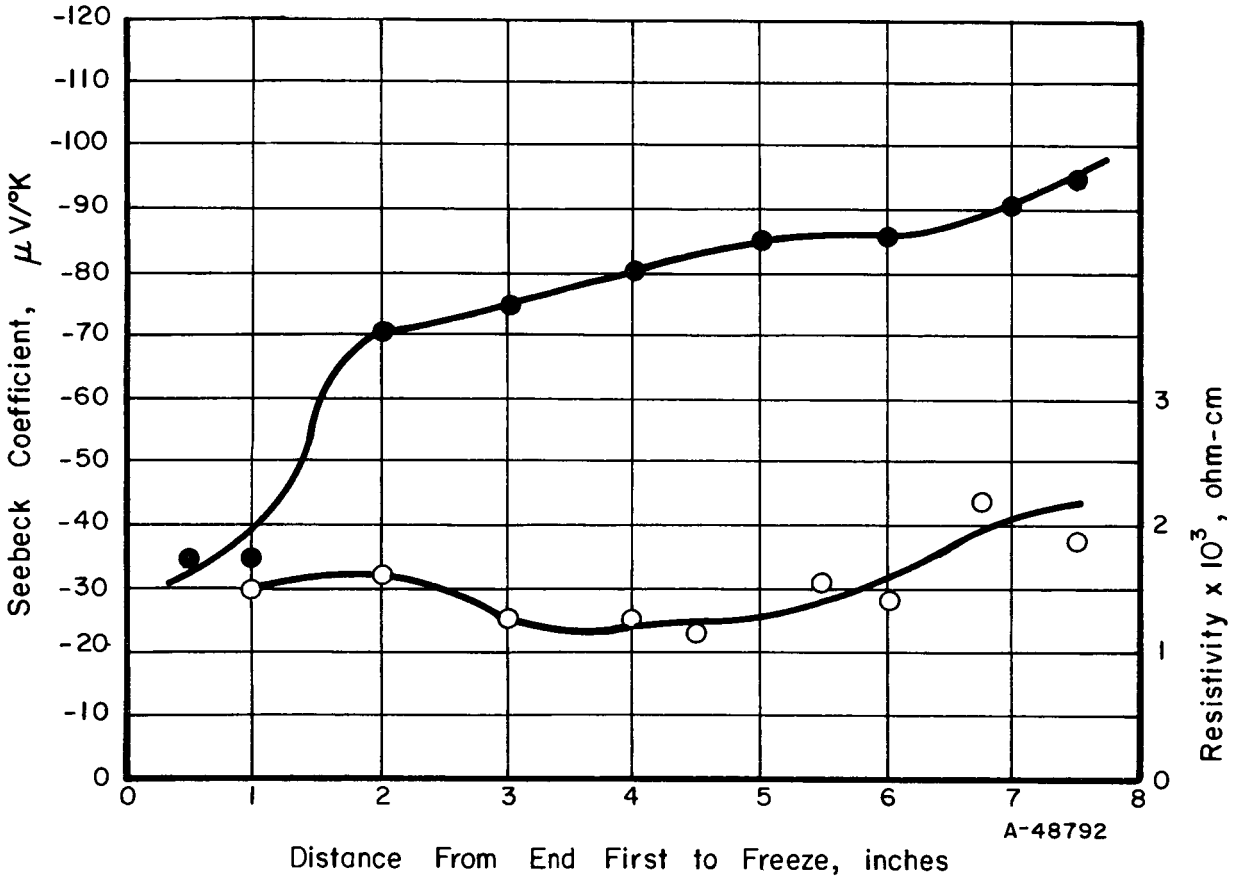

FIGURE 4. SEEBECK COEFFICIENT AND RESISTIVITY AS FUNCTIONS OF POSITION ALONG A ZONE LEVELLED - ZONE REFINED $AgFeTe_2$ INGOT (NO. 21561-37)

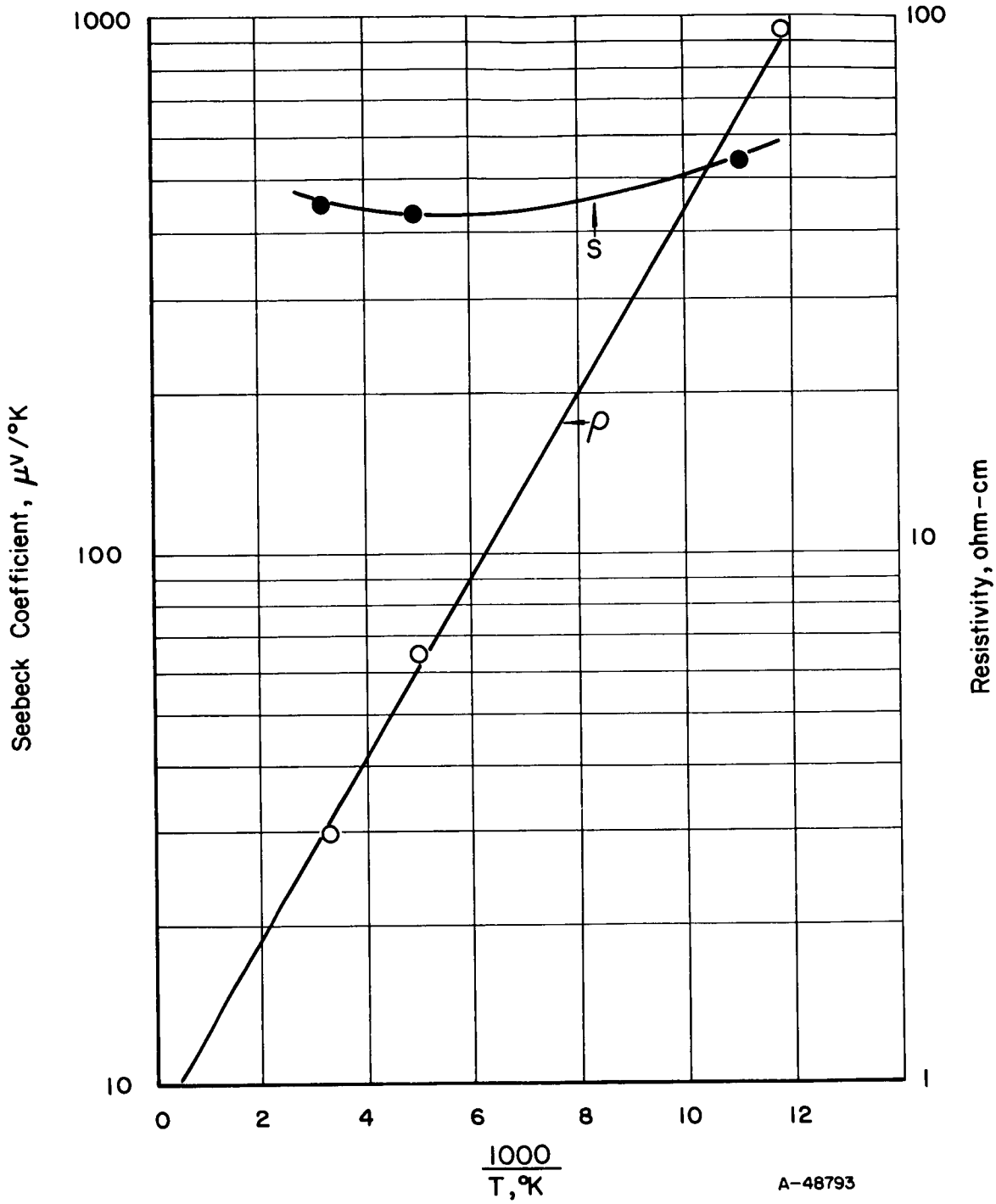

FIGURE 5. SEEBECK COEFFICIENT AND RESISTIVITY OF $AgSbSe_2$ (NO. 21561-3) VERSUS RECIPROCAL TEMPERATURE

dimension along the trigonal axis. If crystallization of the ingots is allowed to nucleate spontaneously, without control of the crystallographic orientation, invariably the crystals are oriented in such a manner that it is impossible to remove specimens with the desired dimensions (16-20 mm by 4-5 mm by 2-3 mm) for evaluation. The cleavage plane (plane perpendicular to the trigonal axis) is generally oriented at 45 to 60° with respect to the longitudinal axis of the ingot and tilted with respect to the vertical axis. However, by controlled seeding, it has been possible to grow large single-crystal ingots with the cleavage plane oriented vertically and lying along the longitudinal axis (growth direction) of the ingots. With this orientation, the length of the specimen corresponds to the width of the ingot, and specimens with dimensions adequate for electrical measurements were obtained.

Preparation. Both n-type (undoped) and p-type (tin-doped) single-crystal alloy ingots of nominal composition $Bi_{86}Sb_{14}$ (atomic percent) were grown by zone levelling, using rf induction heating and coupling directly to the melt. A carbon-coated quartz boat* of semicircular cross section was used as the melt container. The coating reduced stray nucleation of crystals at the melt-container interface.

The polycrystalline alloy ingots for the zone-levelling process were prepared by a specially developed decanting technique, as shown in Figure 6, to eliminate oxides from the surface of the ingots. (Surface oxides provide nucleation sites.) The elements are first melted together in Section 1 in vacuum, using a split, resistance-wound furnace. The melt is thoroughly homogenized by rocking the apparatus, decanted through the pouring spout into Section 2, and then crystallized by slowly lowering the temperature of the furnace.

The polycrystalline alloy ingots prepared by the above process are then transferred to the zone-levelling apparatus, as shown in Figure 7. The ingots are given several zone-levelling passes at a rate of 3.2 cm per hour to further homogenize the alloy (without melting into the seed crystal) and then the required number of passes for single-crystal growth by melting into the seed. The total number of passes ranged from 12 to 28. The ingots thus prepared weigh approximately 375 grams and measure about 2.2 cm by 25 cm.

In the preparation of doped ingots, the dopant can be added to the elements prior to casting of the polycrystalline ingot or placed on top of the ingot prior to zone levelling. Both methods have been used with satisfactory results. The tin-doped alloy ingot discussed below was prepared by the latter procedure.

Several alloy ingots, both n- and p-type, having the nominal composition $Bi_{86}Sb_{14}$ (atomic percent Sb), were prepared. Alloy Ingot 21590-1 was prepared without the addition of a dopant. It was n-type and contained a single crystal approximately 11 cm long with the cleavage plane oriented vertically and along the longitudinal axis of the ingot. Thermoelectric properties are discussed in the next section.

In an attempt to make p-type material, an ingot (21590-5A) was prepared in the same manner, except that it was doped with 0.9 atomic percent tin. Nominal composition was $Bi_{84.9}Sb_{14.2}Sn_{0.9}$. Hot-probe measurements showed that the ingot was n-type, except for the end last to freeze. This region, approximately 4 cm long, was partially p-type. No detailed electrical measurements were made because of the inhomogeneity of the material.

*Coated by pyrolyzing acetone vapor on the quartz surface at about 700°C.

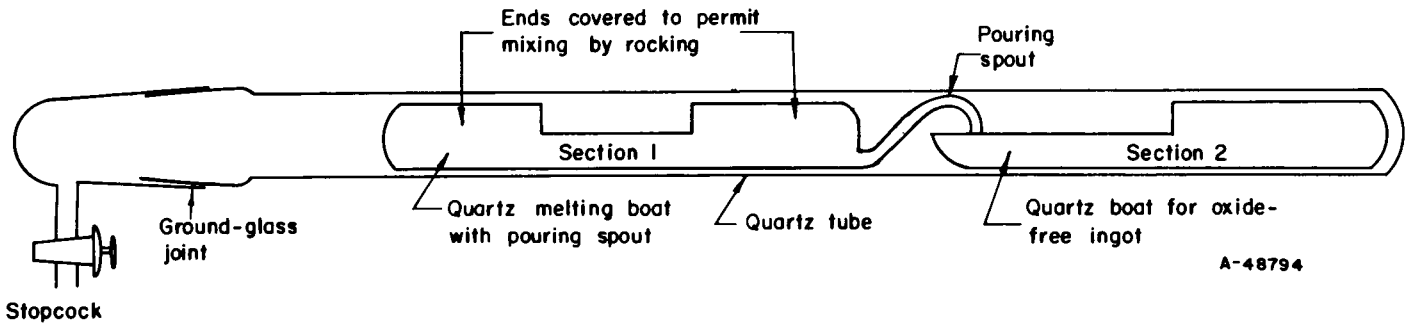

FIGURE 6. APPARATUS FOR PREPARING Bi-Sb ALLOYS WITH OXIDE-FREE SURFACES

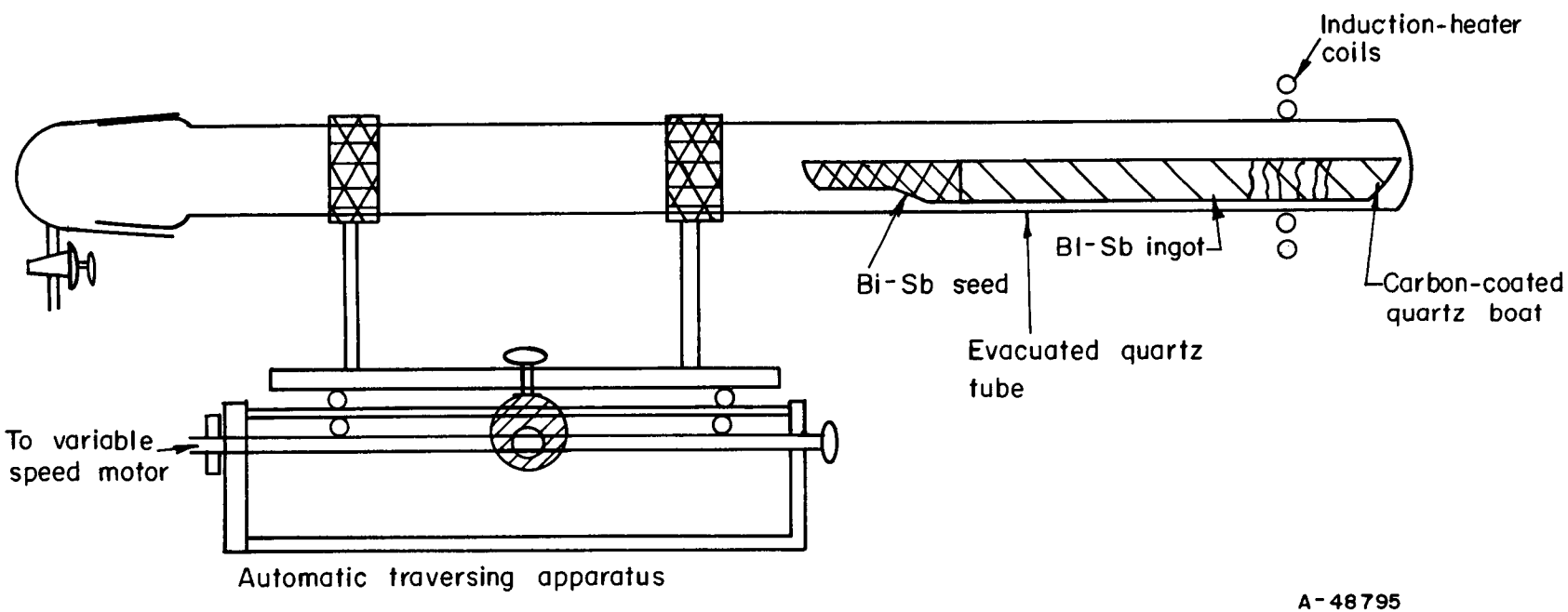

FIGURE 7. ZONE-LEVELLING APPARATUS FOR PREPARATION OF SINGLE-CRYSTAL Bi-Sb ALLOYS

An ingot (21590-5B) prepared by additional doping of the above ingot, and having the nominal composition $Bi_{82.8}Sb_{13.8}Sn_{3.4}$, was all p-type. It contained a large single-crystal section from which samples will be removed for detailed electrical measurements. Approximate resistivity and Seebeck-coefficient values, as determined by the four-probe and hot-probe methods, were 4.3×10^{-4} ohm-cm and 40 μV/°K, respectively.

Electrical Measurements. Thermoelectric properties (Seebeck coefficient, resistivity, and thermal conductivity) of a specimen from Alloy Ingot 20195-1 (n-type, undoped) are shown in Table 4. The composition of this specimen, as determined by wet-chemical analysis, was $Bi_{85.39}Sb_{14.61}$. The measurements were made on an oriented single crystal, using the Z-meter. All values were measured along the trigonal axis. Additional measurements will be made on this specimen and on specimens from the p-type ingot as functions of temperature.

The large variation of the thermoelectric figure of merit, Z, of Bi-Sb alloys with temperature is illustrated by the data in Table 4. The figure of merit increased from 0.93×10^{-3}/°K at 300°K to 3.79×10^{-3}/°K at 80°K. The opposite effect of temperature is observed with Bi_2Te_3 alloys, for which the figure of merit decreases two to threefold from room temperature to 80°K.

TABLE 4. THERMOELECTRIC PROPERTIES OF Bi-Sb ALLOY

Specimen	Composition, at. % Sb	Temp, °C	Seebeck Coefficient, μV/°K	Resistivity, ohm-cm	Thermal Conductivity, watt/cm°K	Figure of Merit, °K^{-1}
20195-1	$Bi_{85.39}Sb_{14.61}$	300	-80	1.70×10^{-4}	3.74×10^{-2}	0.93×10^{-3}
		80	-123	1.64×10^{-4}	2.37×10^{-2}	3.79×10^{-3}

Theoretical Investigations

The primary objective of the theoretical-investigations phase is to formulate useful guidelines for the development of improved thermoelectric materials.

If Suchet's[7,8] ionicity considerations or any other chemical or physical properties are to be of value as guidelines, they must exhibit a reasonable degree of correlation with the values of the various electrical and thermal transport parameters that affect the value of the dimensionless parameter Z(max)T, where Z(max) is the highest figure of merit obtainable with a given material as a function of crystallographic orientation and impurity doping, and T is the absolute temperature. The various performance indices of thermoelectric power generators or coolers are functions of ZT.

Since Z(max)T is dimensionless, it must be a function of dimensionless combinations of the various transport and band-structure variables. The term "parameter" in this discussion denotes a dimensionless parameter. The specification of the various pertinent parameters and the determination of the functional relationship between Z(max)T and these parameters have been developed for the standard two-band model

(conduction plus valence band) of a semiconductor or semimetal.[9] The general transport equations for electrical charge and thermal energy in an anisotropic multiband, multi-energy-extremum semiconductor or semimetal material under the influence of an electric field, magnetic field, and temperature gradient[10] permit the establishment of functional relationships among either the Peltier-Seebeck (PS) or Nernst-Ettingshausen (NE) figures of merit and the pertinent material parameters. These have been applied to the NE figure of merit of two-band materials[10] and have been used to obtain relationship between the NE and PS figures of merit in the strong magnetic field.[11]

The two Suchet ionicity parameters, the crystalline and atomic ionicities λ and λ_o, respectively, are already dimensionless parameters since they are distribution probabilities, as must also be their difference q/c, the effective charge ratio. In order for these Suchet parameters to be of value in preselecting potential thermoelectric materials, there must be a degree of correlation, different from essentially zero, between the value of Z(max)T and some combination of the values of these parameters, as previously mentioned. This correlation does not have to be universal in the sense that it encompasses all possible thermoelectric materials. It would certainly be of value to be able to predict which ternary compounds of a given class, for example, would be most likely to make better thermoelectric materials.

Single-Band Conduction

As Suchet also points out[8], the aim of an investigation concerning thermoelectric materials is to obtain as high a value as possible of the quantity $m_d^{3/2}\mu/k_{ph}$, where μ is mobility, m_d is density-of-states effective mass, and k_{ph} is the lattice thermal conductivity. Suchet thereby implicitly limits his considerations to the single energy band, multi-valley case, since this quantity would be different, in general, for each energy band. He further explicitly limits his considerations to the ratio μ/k_{ph}, despite the fact that high "μ" is usually associated with small "m". The effects of this will be discussed in more detail later.

The minimum magnitude of the reduced thermal energy gap, the forbidden energy gap in kT units, between the lowest conduction-band minimum and the highest valence-band maximum for which the single-band assumption would be a good approximation, depends upon the magnitude of the parameter β for the band of interest and upon the values of the ratio of the β's for the two bands.[9] The reduced energy separations between the various conduction or valence bands for which the single-band approximation is valid is also a function of the β's of the individual bands[12].

The quantity β introduced in the above paragraph is the primary dimensionless material parameter that determines the value of Z(max)T for a single-band material. It was first introduced by Chasmar and Stratton[13] and is defined by

$$\beta = (k/e)^2\sigma_o T/k_{ph} \quad , \tag{1}$$

where

$$\sigma_o = N\cdot 2(2\pi m_d kT/h^2)^{3/2} e\hat{\mu} \quad . \tag{2}$$

The quantity $m_d^{3/2}\mu/k_{ph}$ is seen to be a factor of β. The remaining factors include an explicit $T^{3/2}\cdot T = T^{5/2}$ dependence, the number of equivalent valleys N, and the universal constants k (Boltzmann's constant), e (the electronic charge), and h (Planck's constant). The quantity $\hat{\mu}$ is an effective mobility whose value depends upon the current

direction with respect to the crystal symmetry axes. For a crystal of cubic symmetry, $\hat{\mu}$ is isotropic and is given by $(1/3)(\mu_1+\mu_2+\mu_3)$, where μ_1, μ_2, and μ_3 are the Abeles and Meiboom partial mobilities[14] associated with intravalley conduction along the respective principal axes of each energy ellipsoid. If the relaxation time, τ, is isotropic, $\hat{\mu} = e(m_1^{-1}+m_2^{-1}+m_3^{-1}) \langle\tau\rangle$ where the m's are the principal masses of each energy ellipsoid and $\langle\tau\rangle$ is the relaxation time suitably averaged over the charge-carrier energy distribution. In terms of these principal masses, the density-of-states mass, m_d equals $(m_1m_2m_3)^{1/3}$.

The value of Z(max)T, at optimum impurity doping, is a function only of the two parameters β and r for single-band conduction[13]. The parameter r is the charge-carrier scattering parameter. In the relaxation-time approximation, the relaxation time varies as the r-1/2 power of the charge-carrier energy, and the mean free path length as the r-th power of the energy. The value of Z(max)T is a function of these two parameters approximately in the combination βe^r, as seen in Figure 8*. This approximation is seen to be a good one in the neighborhood of Z(max)T = 1, corresponding to the presently best available thermoelectric materials.

$\sigma_o$exp r Analysis

The electrical conductivity σ for a single-band material with parabolic energy bands is given by

$$\sigma = \sigma_o F_r(\eta)/r! \quad , \tag{3}$$

where $F_r(\eta)$ is the standard Fermi integral as a function of the reduced Fermi energy, η. Equation (3) reduces to $\sigma = \sigma_o e^{\eta}$ in the classical-statistics limit. Under the same conditions the absolute value of the Seebeck coefficient is given by

$$|S| = (k/e)\left[\frac{r+2}{r+1}\frac{F_{r+1}(\eta)}{F_r(\eta)} - \eta\right] \quad , \tag{4}$$

which reduces to $|S| = (k/e)(r+2-\eta)$ in the classical-statistics limit. The value of σ_o for any single-band material could, in principle, be obtained from any specimen of extrinsic, single-band conductivity by measuring the values of both S and σ for that specimen. The value of η could then be obtained with the aid of Equation (4) if r is known, and then σ_o could be obtained with the aid of Equation (3).

Figure 9 shows the results of eliminating η between Equations (3) and (4) to obtain $\sigma_o e^r/\sigma \equiv \sigma_o e^r \rho$ as a function of S for various values of r. For $|S| \gtrsim 350 \mu v/°C$, corresponding to the classical-statistics region, the curves for the various values of r are superimposed onto a single straight line on the semi-log scale of the figure. This is because the value of η may be eliminated explicitly from the classical-statistics forms of σ and $|S|$ to obtain $\sigma_o \exp r = \sigma \exp[(e/k)|S|-2]$.** Since Z(max)T depends approximately upon the combination βe^r, the quantity of interest is $\sigma_o e^r$ rather than σ_o itself. It is seen from Figure 9 that even if the value of r is unknown, a good approximation to $\sigma_o e^r$ can be obtained except for highly doped specimens, corresponding to highly degenerate carrier concentrations. At any rate, specimens that are highly doped may exhibit changes in the band structure and/or the formation of impurity bands

*Figure 8 is a reproduction of Figure 1 of Reference (15).

**This classical-statistics relationship is represented by the straight line labelled c in Figure 9.

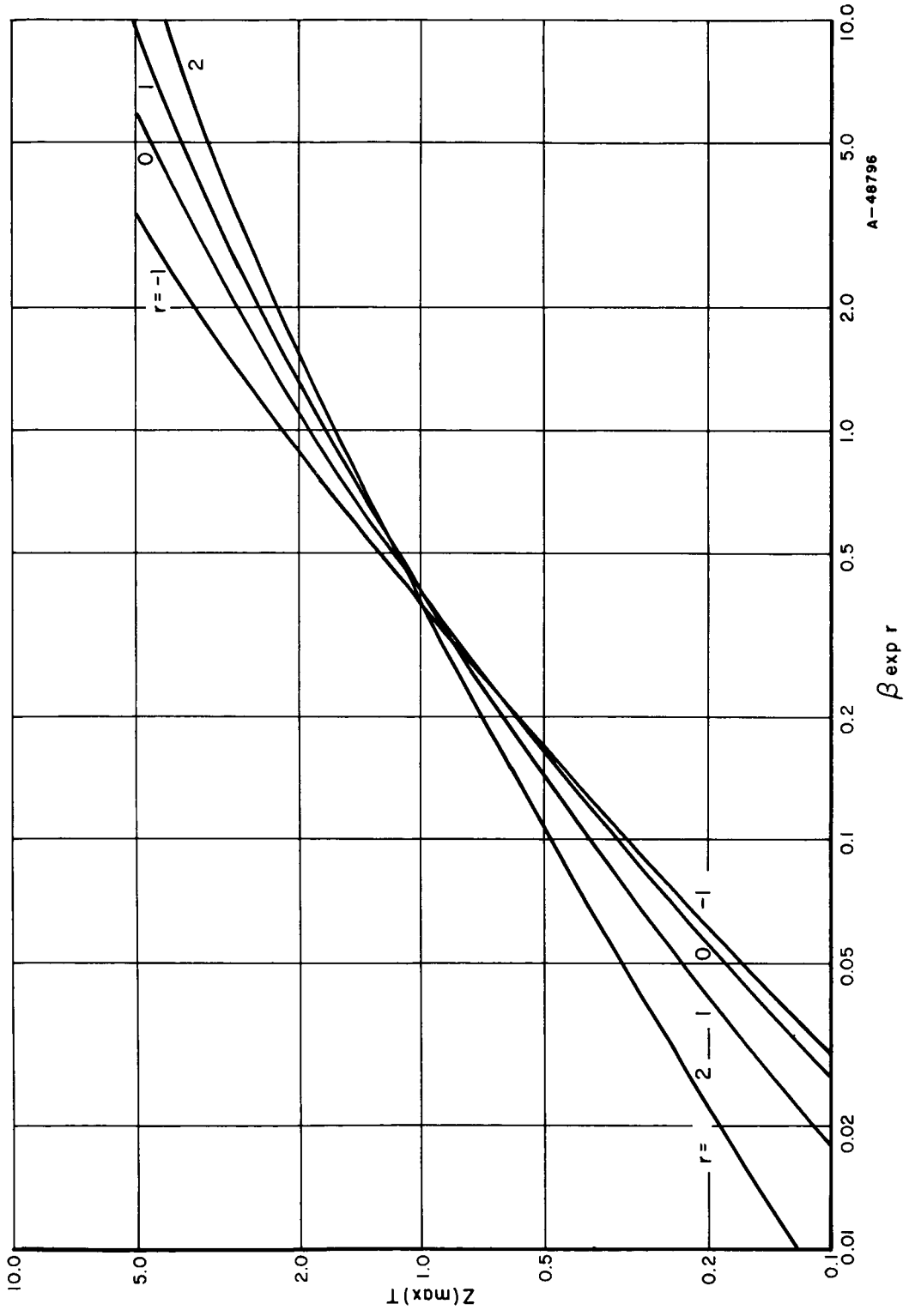

FIGURE 8. Z(max)T AS A FUNCTION OF β exp r

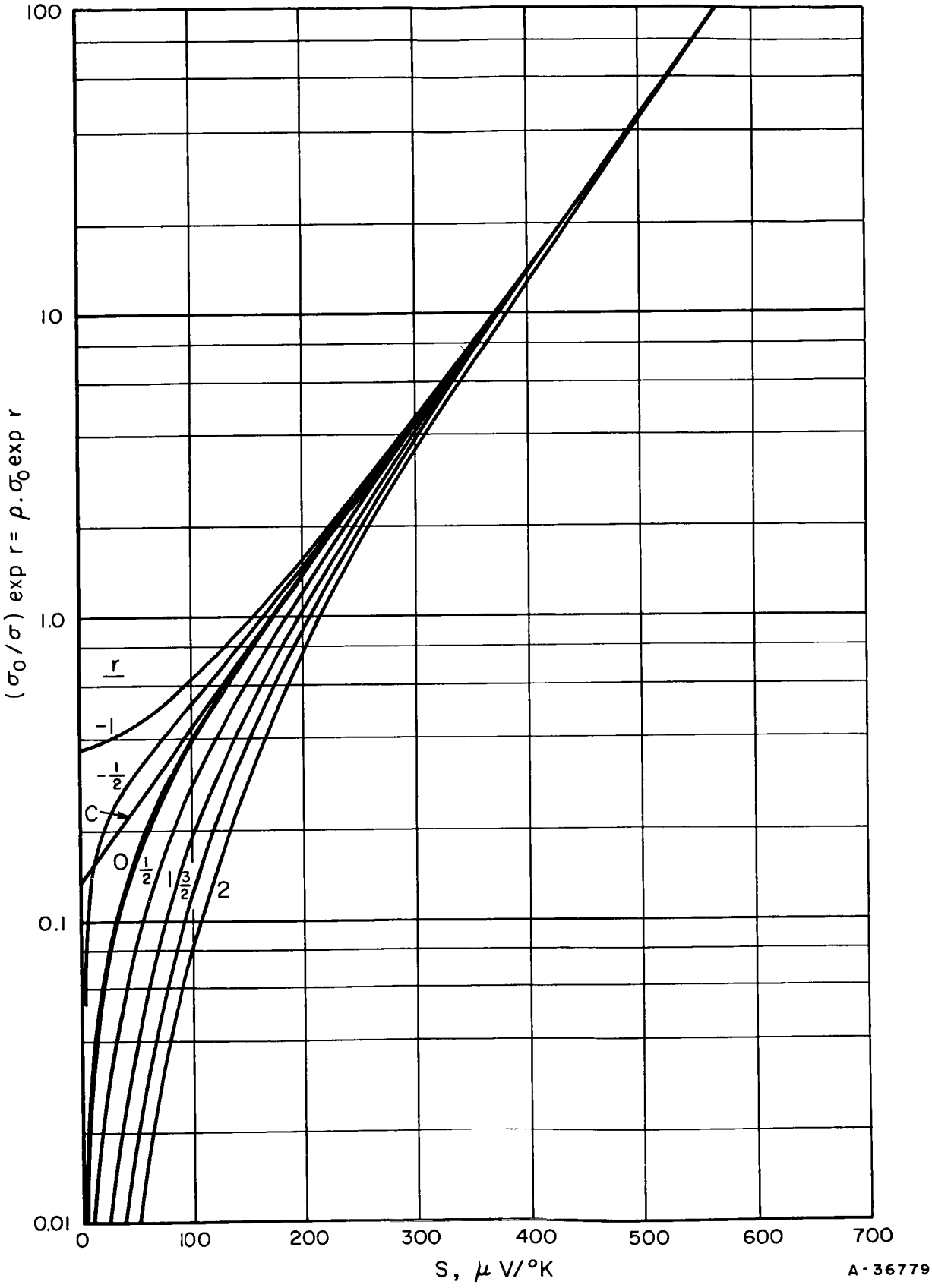

FIGURE 9. (σ_o/σ) exp r AS A FUNCTION OF S

BATTELLE MEMORIAL INSTITUTE

that would introduce errors in the values of σ and S computed by using Equations (3) and (4), respectively.

It is thus seen that the quantity $\sigma_o e^r$ is a characteristic constant of the material whose value may be obtained from the conductivity and Seebeck coefficients, in analogy to the charge-carrier mobility, whose value is obtained from the conductivity and Hall coefficient for single-band materials. The value of $\sigma_o e^r$ is directly indicative of the "quality" of the electronic transport properties of a single-band material pertinent to its potentialities as a thermoelectric material.

If an appreciable amount of electronic conduction takes place also in a second energy band, the error made in using the relationship expressed by Figure 9 to obtain the value of $\sigma_o e^r$ for the primary band is of the same nature as the error made in the mobility of the charge carrier of the primary band by assuming it to be equal to the Hall mobility. This may be seen from the following relationships:

$$\left.\begin{aligned} \sigma &= \sigma_1+\sigma_2 \\ R_H\sigma &= (\sigma_1/\sigma)(R_{H1}\sigma_1)+(\sigma_2/\sigma)(R_{H2}\sigma_2) \\ S &= (\sigma_1/\sigma)S_1+(\sigma_2/\sigma)S_2 \end{aligned}\right\} \quad . \tag{5}$$

The subscripts 1 and 2 refer to the two individual bands and the signs of the Hall and Seebeck coefficients for the individual bands are the conventional ones, positive for holes and negative for electrons.

Scattering Mechanism Considerations

As long as the dominant charge-carrier scattering mechanism is by the optical-mode lattice vibrations, the value of the mobility alone is of no value in rating the potential thermoelectric merit of single-band materials. The quantity $\sigma_o e^r$ for optical mode scattering is independent of μ, since $\mu \propto m^{-3/2}$ according to the perturbation theory of optical-mode lattice-vibration scattering, which is the case of interest here. In fact, for predominantly optical-mode lattice scattering[9],

$$\sigma_o \approx (8/3\pi)(kT/h)(\epsilon_\infty^{-1}-\epsilon_o^{-1})^{-1} \quad , \tag{6}$$

which is independent of any of the band-structure variables. In Equation (6), ϵ_o and ϵ_∞ are the low- and high-frequency limiting values of the dielectric constant.

Although of no value as a thermoelectric rating criterion among a group of materials whose charge-carrier scattering is predominantly by optical-mode lattice vibrations, the possibility that the value of the mobility alone might serve as a rating criterion among a group of materials with mixed optical- and acoustical-mode lattice scattering may be considered, assuming that a higher mobility is a rough indication of a lower relative contribution of optical-mode scattering. However, the best thermoelectric material among such a group may actually correspond to one with a certain percentage of optical-mode scattering rather than zero. This is because the increase in the effective value of r for an admixture of a small amount of optical-mode scattering (r = 1) to acoustical-mode scattering (r = 0) more than compensates for the decrease of σ_o in the value of the quantity $\sigma_o e^r$. Larger relative amounts of optical-mode scattering

would lower σ_o too rapidly, however. Just what proportion of optical-mode scattering would be optimum remains to be investigated, starting from the relaxation-time relationship:

$$1/\tau(E) = 1/\tau_a(E) + 1/\tau_o(E) \quad , \tag{7}$$

where $\tau_a(E) \propto E^{-1/2}$ and $\tau_o(E) \propto E^{+1/2}$. The relationship $\mu^{-1} = \mu_a^{-1} + \mu_o^{-1}$, where subscripts a and o stand for acoustic and optical, respectively, is not correct, although it is sometimes found in the literature. The correct relationship for mixed scattering is

$$\mu = (e/m)\langle\tau(E)\rangle \quad , \tag{8}$$

with $\tau(E)$ given by Equation (7). A similar analysis has been made for an admixture of ionized impurity scattering ($r = 2$) and acoustic-mode lattice scattering[15,16].

For pure acoustic-mode lattice-vibration scattering, the higher the mobility the greater is the value of $\sigma_o e^r$, since $\mu \propto m^{-5/2}$ for this scattering mode. In fact, σ_o is given by[3]

$$\sigma_o = (e^2 h/3\pi^2) C_{11}/m_c E_1^2 \quad , \tag{9}$$

where m_c is the conductivity effective mass, C_{11} is the elastic modulus, and E_1 is the deformation potential. It is not evident how the value of μ for pure acoustic-mode scattering could correlate with the Suchet ionicity parameters.

Conclusion

It may be concluded on the basis of the above considerations that it is doubtful that the use of Suchet's ionicity parameters would be of value in preselecting potential thermoelectric materials for further study. Objections have been raised in the above discussion concerning its applicability even to the single-band model, let alone to the multi-band situation that might characterize some of the ternary and more complex compounds of future interest. Nevertheless, it is considered worthwhile to attempt to correlate the computed Suchet ionicity values with the values of $\sigma_o e^r$ for those materials for which the required data exist. In those cases for which information on k_{ph} is available, this correlation will also be attempted for the entire parameter β.

ANTICIPATED WORK

Work plans for the next period include

(1) Measurement of thermoelectric properties of n- and p-type $Bi_{86}Sb_{14}$ alloy specimens

(2) Study of the effect of composition on figure of merit of Bi-Sb alloys

(3) An effort to prepare homogeneous $AgSbTe_2$, $AbFeSe_2$, and $AgFeTe_2$

(4) Study of the effect of doping on $AgSbSe_2$

(5) Theoretical investigation to correlate the various band-theory dimensionless parameters with the various chemical-bond parameters.

The data on which this report is based are recorded in Battelle Laboratory Record Books Nos. 21561, pp 1-50, and 21590, pp 1-8.

REFERENCES

(1) Airapetyants, S. V., Sov. Phys.-Tech. Phys., 2, 478 (1957).

(2) Airapetyants, S. V., and Breslev, M. S., Sov. Phys.-Tech. Phys., 3, 1935 (1958).

(3) Beer, A. C., and Bate, R. T., "Effect of Various Impurities on Lattice Thermal Conductivity of Bi_2Te_3", Final Report from Battelle Memorial Institute to Office of Naval Research, Contract No. NONR-2316(00), April 30, 1960.

(4) Cosgrove, G. J., et al., J. Appl. Phys., 32, 621 (1961).

(5) Wolfe, R., et al., J. Appl. Phys., 31, 1959 (1960).

(6) Nensberg, E. D., and Shtrum, E. L., Soviet Physics-Solid State, 5, 2463 (1964).

(7) Suchet, J. P., J. Phys. Chem. Solids, 21, 156 (1961).

(8) Suchet, J. P., Rodot, H., Leroux-Hugon, P., and Rodot, M., Adv. Energy Conv., 3, 569 (1963).

(9) Simon, R., J. Appl. Phys., 33, 1830 (1962).

(10) Simon, R., Solid-State Electronics, 7, 397 (1964).

(11) Simon, R., to be published in Adv. Energy Conv.

(12) Simon, R., unpublished analysis.

(13) Chasmar, R. P., and Stratton, R. J., J. Electronics and Control 7, 52 (1959).

(14) Abeles, B., and Meiboom, S., Phys. Rev., 101, 544 (1956).

(15) Simon, R., Adv. Energy Conv., 1, 81 (1961).

(16) Ure, R. W., J. Suppl. Phys. 30, 1922 (1959).

EPS:LKM:BGK:RS:EHL/mln

Battelle Memorial Institute · COLUMBUS LABORATORIES

505 KING AVENUE COLUMBUS, OHIO 43201 · AREA CODE 614, TELEPHONE 299-3151 · CABLE ADDRESS: BATMIN

October 27, 1964

National Aeronautics and Space Administration
George C. Marshall Space Flight Center
Huntsville, Alabama 35812

Attention PR

Gentlemen:

Enclosed is the First Quarterly Progress Report on your project, "Development of Improved Thermoelectric Materials for Spacecraft Applications" (Contract No. NAS8-11452), covering the period from June 29 to October 1, 1964.

During this quarter, 896 hours of professional scientists' time and 148.5 hours of technicians' time was charged to the project. Of these, 337 hours of professional scientists' time and 65 hours of technicians' time was charged to the project during the third month.

The attached revised program-planning chart reflects the clarification of emphasis in the experimental program agreed upon at our meeting in Huntsville, Alabama, on September 17, 1964.

During this report period, progress was made toward preparation of homogeneous specimens of ternary materials in the $Ag(Fe,Sb)_x(Se,Te)_y$ system. In the study of bismuth-antimony alloys, single crystals of both p- and n-type materials were prepared and are being evaluated. Also initiated was theoretical effort directed toward correlation of the ionicity concept with the theory of the fundamental semiconductor characteristics determining thermoelectric behavior.

We trust you will find the report satisfactory. Please let us know if you have any questions concerning the report or the conduct of the research.

Very truly yours,

E. H. Lougher

E. H. Lougher, Assistant Chief
Solid-State Materials Research

EHL:mln
Enc. (15)

cc: Mr. J. C. Horton (11)