AROD TRANSPONDER

THEORY OF OPERATION

PREPARED FOR

THE NATIONAL AERONAUTICS AND SPACE ADMINISTRATION

GEORGE C. MARSHALL SPACE FLIGHT CENTER

UNDER CONTRACT NO. NAS8-5480

JUNE 1964

GPO PRICE $ _____

OTS PRICE(S) $ _____

Hard copy (HC) $2.00

Microfiche (MF) $0.50

FACILITY FORM 602

N65-17956 (ACCESSION NUMBER)

64 (PAGES)

CR-60988 (NASA CR OR TMX OR AD NUMBER)

1 (THRU)

(CODE)

07 (CATEGORY)

SPACE CRAFT, INC.

SECTION III

AROD TRANSPONDER

THEORY OF OPERATION

AROD TRANSPONDER

THEORY OF OPERATION

PREPARED FOR

THE NATIONAL AERONAUTICS AND SPACE ADMINISTRATION

GEORGE C. MARSHALL SPACE FLIGHT CENTER

UNDER CONTRACT NO. NAS8-5480

JUNE 1964

Space Craft, Inc.
8620 South Memorial Parkway
Huntsville, Alabama

TABLE OF CONTENTS

I. INTRODUCTION

II. GENERAL DESCRIPTION

1. Functional Block Diagram
2. Input and Output Spectrum
3. Frequency Versatility and Synthesizing Philosophy

III. RECEIVER

1. Frequency Scheme
2. Bandwidth and Phase Shift Considerations
3. Demodulator
4. AGC System
5. Receiver Acquisition

IV. RANGE TONE FILTERS

1. General
2. 2.342 MC Filter
3. 2.2688 MC Filter
4. 1.107 & 1.179 KC Filter

V. SITE IDENTIFICATION GENERATOR

TABLE OF CONTENTS

(Continued)

VI. TRANSMITTER

1. Frequency Scheme

2. Tracking Filter

3. Transmitter Modulator

4. Frequency Acquisition & Doppler Compensation

VII. SYSTEM ACQUISITION

1. Operating Modes

2. Acquisition Philosophy

3. Detailed TTR Acquisition

4. Detailed TTT Acquisition

5. VTR Acquisition

LIST OF ILLUSTRATIONS

Figure 1 Simplified Functional Block Diagram of AROD Transponder

Figure 2 Baseband Spectrum

Figure 3 Transponder Receiver Input Spectrum

Figure 4 Transmitted Spectrum

Figure 5 Phase-Locked Frequency Divider

Figure 6 PCO Multiplier and Phase-Locked Loop Filter

Figure 7 PCO Multiplier Scheme Capable of Providing Output Frequencies in Increments of 1/4 f_o.

Figure 8 PCO Multiplier Scheme Capable of Providing Output Frequencies in Increments of 0.1 f_o.

Figure 9 Simplified Block Diagram of AROD Transponder Receiver

Figure 10 Bandwidths of Filters to Achieve Phase Slopes Inversely Proportional to Center Frequency

Figure 11 Simplified Block Diagram of AROD Transponder Exciter

Figure 12 Block Diagram Illustrating Simple Method of Achieving Doppler Reversal

LIST OF ILLUSTRATIONS

(Continued)

Figure 13 Block Diagram Illustrating a Practical Method of Doppler Reversal

Figure 14 AROD Transponder Receiver Acquisition Scheme

Figure 15 AROD Transponder Exciter Acquisition Scheme

AROD TRANSPONDER

THEORY OF OPERATION

I. INTRODUCTION

The following discussion pertains to the AROD Transponder, its performance requirements, design concepts, and techniques for achieving the required performance. No effort will be made to describe the entire AROD System or any part of the system which does not directly relate to or affect the transponder design.

II. GENERAL DESCRIPTION

1. Functional Block Diagram

A simplified functional block diagram of the AROD Transponder is shown in Figure 1. A phase modulated input signal at S-Band carries the ranging information in the form of four pairs of first-order sidebands derived from four range tones. Velocity information is contained in the Doppler shift of the received carrier frequency relative to a specified fixed carrier frequency.

The primary function of the Transponder is to translate the input carrier frequency to any one of four different output frequencies also in S-Band, and to preserve both the velocity and range information in making this translation. Several additional functions and requirements which have a significant effect on the Transponder design are listed below:

a. Linear demodulation of the phase-modulated input signal to extract the range tones for further signal processing.

b. Narrow-band filtering of the individual range tones to limit the noise bandwidth and thus improve signal-to-noise ratio on the retransmitted

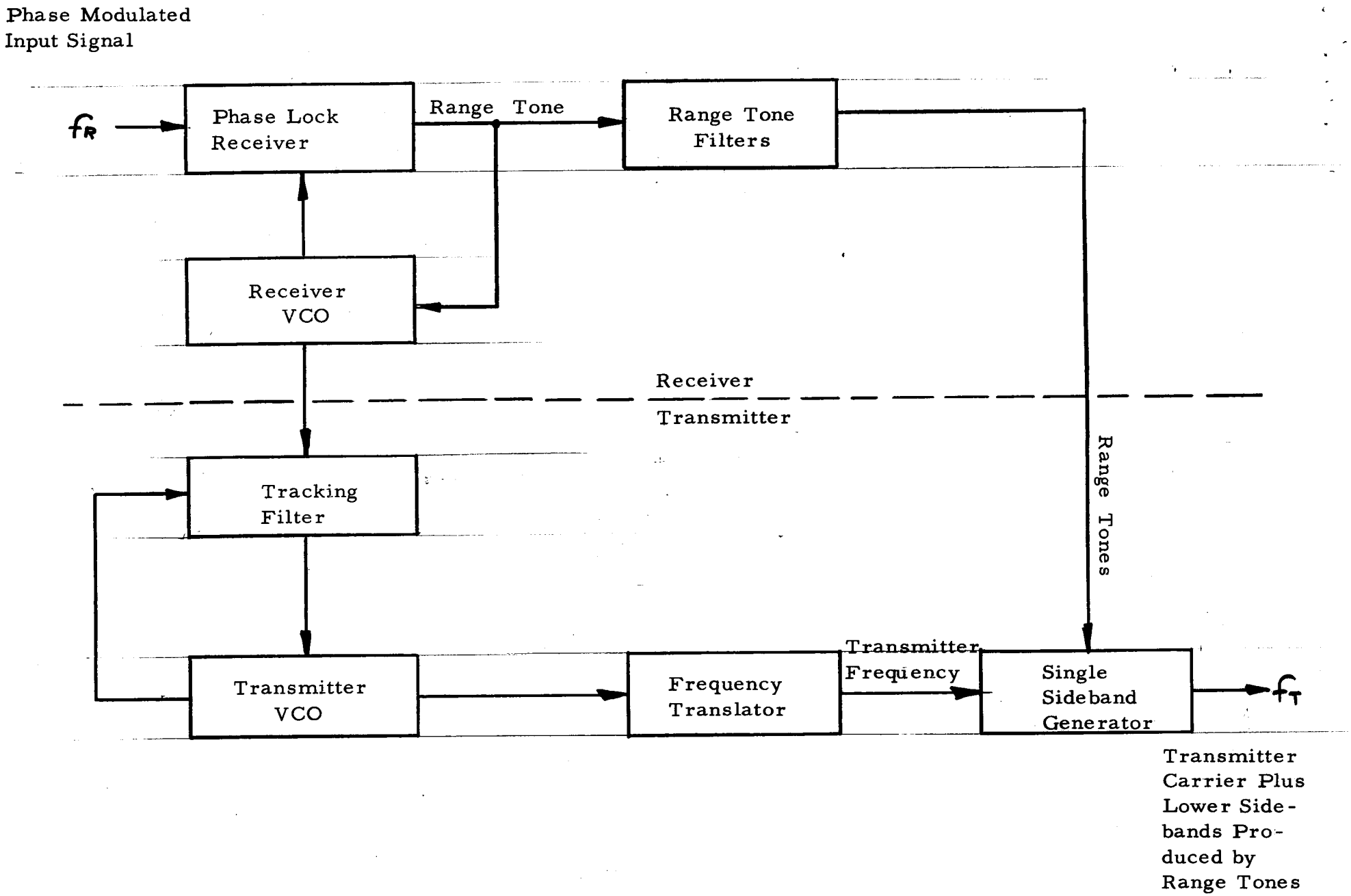

Figure 1. Simplified Functional Block Diagram of AROD Transponder

signals.

c. Generation of a single-sideband-plus-carrier type of output signal where the range tones appear as lower sidebands in the output signal spectrum.

d. A frequency scheme which will allow changes in the input and output frequencies in increments of 585.5 kc without major redesign of the Transponder. The frequency scheme must also allow the four transmitter output frequencies (channels) to be initially set up in increments of N times 234.2 KC where N is a whole number from 0 to 9 inclusive.

e. Receiver to be phase-lock type with loop noise bandwidth (2 B_L) of 300 cps.

f. Acquisition time for receiver loop to be as short as possible. Design goal is less than 0.5 sec for an initial frequency offset of ±80 kc due to Doppler shift on the incoming carrier frequency.

g. Doppler correction of transmitted signal to be provided during acquisition by Vehicle Tracking

Receiver. This correction to be removed after acquisition by the Vehicle Tracking Receiver. The purpose of this Doppler correction is to cause the signal received at the vehicle to be within the pull-in range of the narrow-band ($2\ B_L$ = 300 cps) phase-lock loop in the Vehicle Tracking Receiver.

2. Transponder Input and Output Frequency Spectrum

The AROD System ulitizes four basic CW modulating tones to measure range and to resolve ambiguities for distances up to about 1000 miles. The highest-frequency range tone determines maximum resolution and therefore has received the name of the Fine Range Tone (abbreviated FR1). The other range tones have been designated FR2, FR3, and FR4 in the order of decreasing frequency. FR4 is, of course, the lowest frequency tone and thus determines the maximum distance which can be measured without ambiguity. The numerical values of the range tones have been selected to facilitate processing of the signals and range data by binary digital circuitry. Thus, FR1 is the velocity of light (c) divided by a suitable number which is a multiple of the binary number two. Specifically:

$$FR1 = \frac{c}{2^7} = \frac{3 \times 10^8}{128} = 2.3420 \text{ mc}$$

$$FR2 = \frac{FR1}{2^5} = \frac{2.3420}{32} = 73.18750 \text{ kc}$$

$$FR3 = \frac{FR2}{2^5} = \frac{73.18750}{32} = 2.2871093750 \text{ kc}$$

$$FR4 = \frac{FR3}{2^5} = \frac{2.2871093750}{32} = 71.472167968750 \text{ cps}$$

These four range tones are used to phase modulate the carrier received by the Transponder. However, in order to simplify certain circuitry such as modulators and phase lock loop acquisition, the tones are not all directly modulated onto the carrier but are derived as shown in Figure 2. The carrier is directly modulated by FR1. FR1 is modulated by FR2 and by two additional frequencies, f_1 and f_2 which contain the FR3 and FR4 range tones by the following relationship:

$$FR3 = f_1 + f_2$$

$$FR4 = f_2 - f_1$$

A study of the baseband spectrum and the various frequency components illustrated in Figure 2 will facilitate an understanding of the Transponder input and output frequency spectrums.

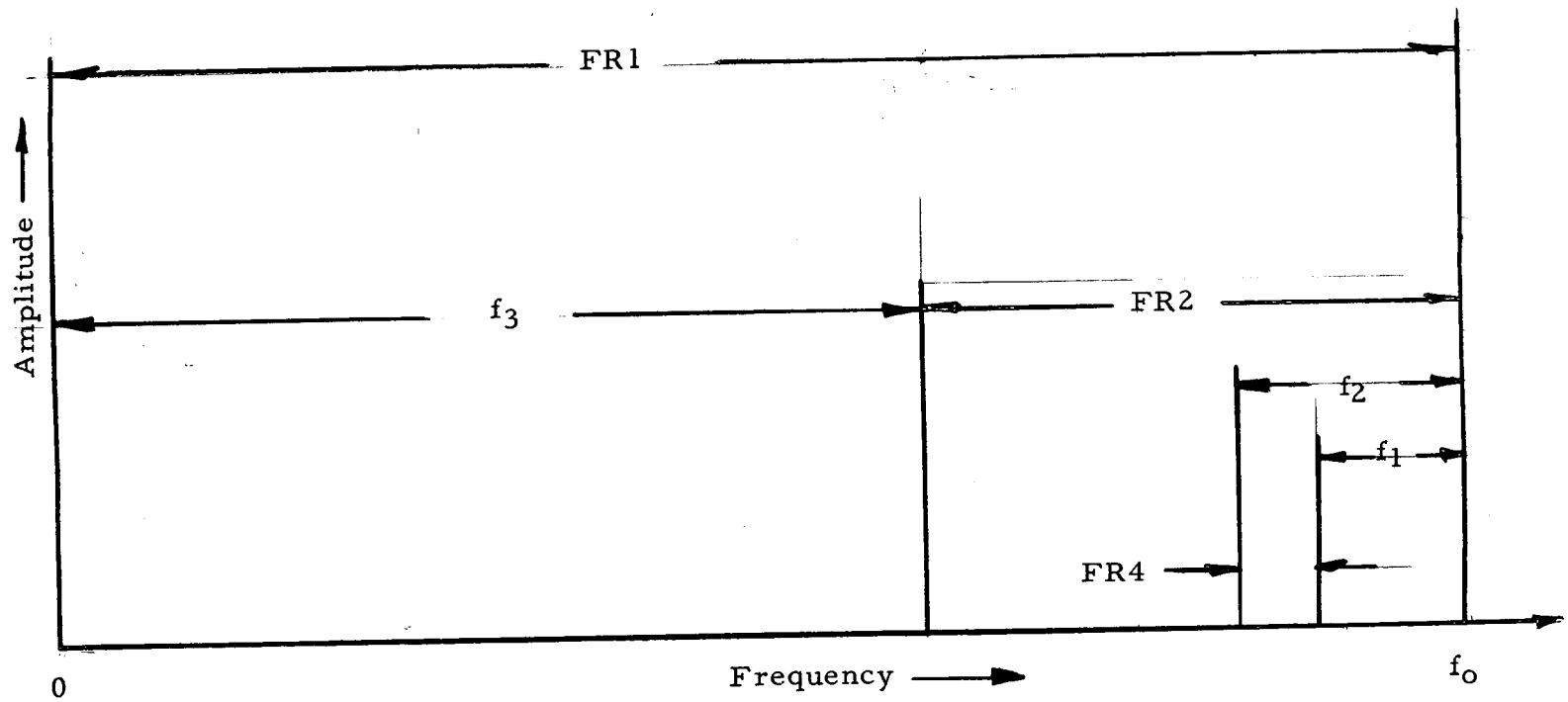

FR1 = f_o = C/128 = 2.3420 mc (C = Velocity of Light)

FR2 = FR1 /32 = FR1 - f_3 = 73.18750 kc

FR3 = FR3/32 = f_1 + f_2 = 2.2871093750 kc

FR4 = FR3/32 = f_2 - f_1 = 71.472167968750 kc

f_1 = 1.107818603516 0750 kc

f_2 = 1.1792907714843750 kc

f_3 = 2.26881250 mc

FR1 - f_1 = 2.34089218140 mc

FR1 - f_2 = 2.340820710 mc

Figure 2. Baseband Spectrum

The Transponder input spectrum is shown in Figure 3. This spectrum consists of the carrier frequency, f_R, and the first-order upper and lower sidebands produced by modulating the carrier with the baseband spectrum shown in Figure 2.

The Transponder output spectrum is shown in Figure 4. The spectrum shown is for either of the four output carrier frequencies, f_T, corresponding to either of the four specified transmitted channels. The transmitted spectrum shown consists of the carrier, f_T, and the lower sidebands produced by the baseband frequencies. One difference between the transmitted and the baseband spectrum is that two additional sidebands have been added to the transmitted spectrum on the lower side of the FR1 sideband. These two extra sidebands have been retained in the transmitted spectrum to simplify certain filters and modulator circuit designs in the Transponder.

3. Frequency Versatility and Synthesizing Philosophy

In order to simplify notation on block diagrams and in the succeeding paragraphs, the symbol, f_o, will be used to designate the fine range tone, FR1, previously defined as 2.342 mc. Thus a notation such as 12 f_o means 12 times 2.342 mc.

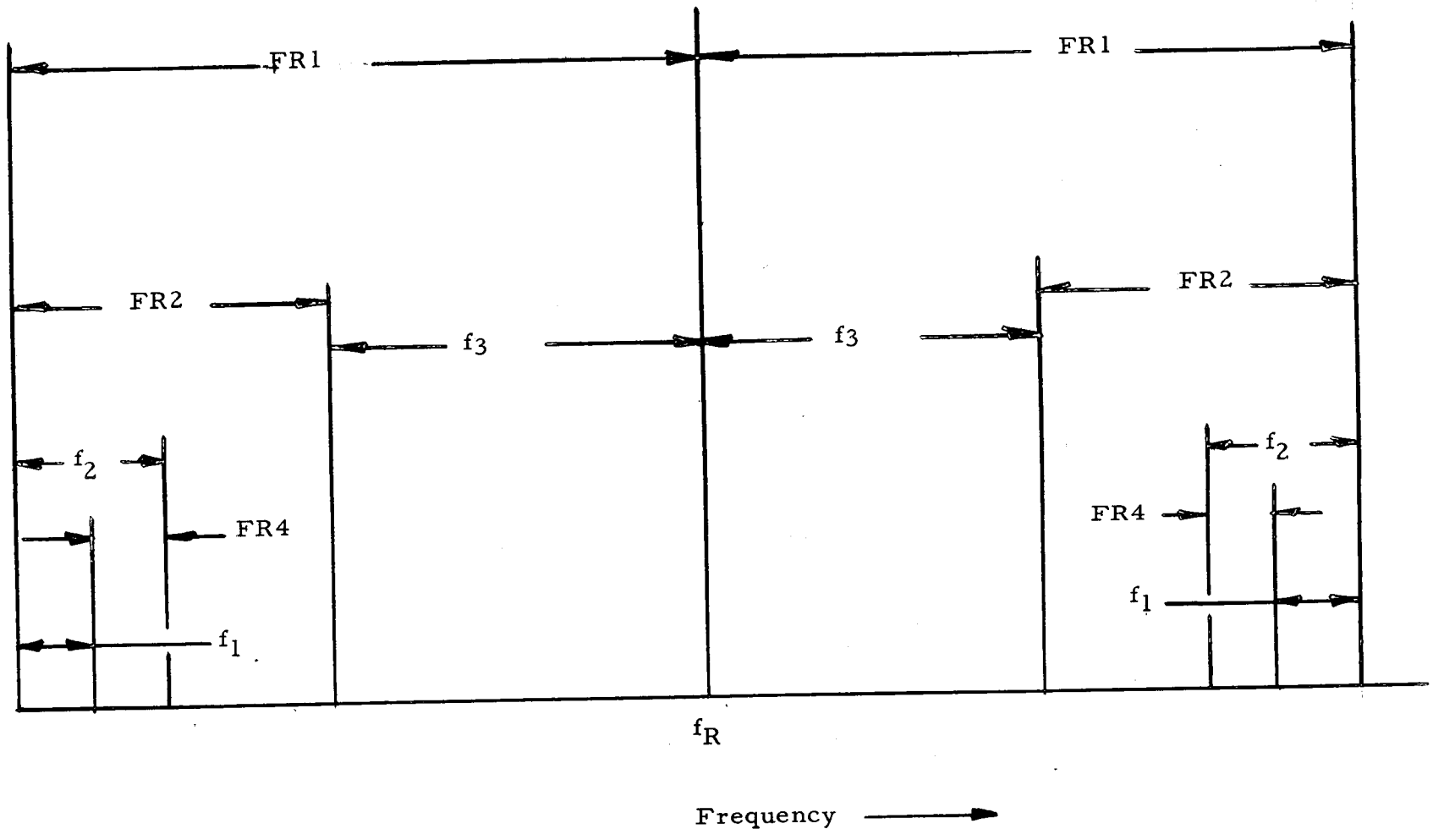

f_R = 2276.424 mc = Received Carrier Frequency

Figure 3. Transponder Receiver Input Spectrum

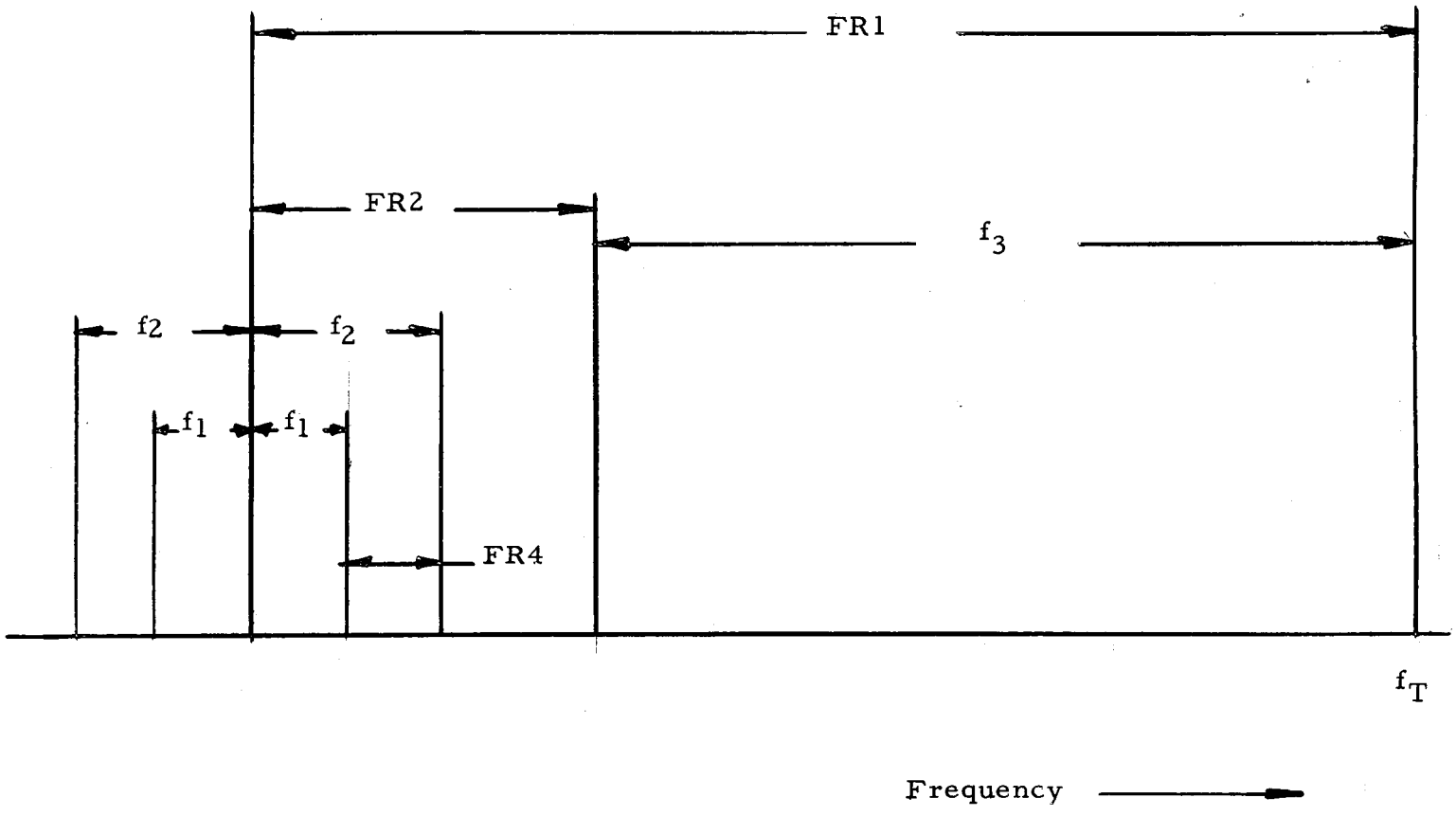

f_T = Transmitted Carrier Frequency

Channel 1: $f_T = 944.4\ f_o = 2211.7848$ mc

Channel 2: $f_T = 945.0\ f_o = 2213.190$ mc

Channel 3: $f_T = 947.3\ f_o = 2218.5766$ mc

Channel 4: $f_T = 947.9\ f_o = 2219.9818$ mc

Figure 4. Transmitted Spectrum

Since all carrier frequencies and range tones used in the AROD System are coherently derived from a single stable reference oscillator operating at f_o and located in the vehicle, all frequencies appearing in the AROD Transponder can be expressed in terms of f_o. This method of expressing the frequencies greatly simplifies the task of discovering and understanding the frequency schemes and frequency relationships. For example, the specified carrier frequency received by the Transponder is 2276.424 mc. This frequency is exactly 972 f_o. Likewise, the four carrier frequencies associated with the four transmitter output channels may be expressed in terms of f_o as shown in Figure 4. For example, channel 1 carrier frequency specified for the evaluation model Transponders is 2211.7848 mc or 944.4 f_o.

The frequency versatility requirement of 585.5 kc increments on both received and transmitted carriers is thus seen to be equivalent to requiring the input and output carrier frequencies to be movable in increments of 1/4 f_o without major redesign. Additionally, it is seen that the channel spacing between the four channel carrier frequencies is some multiple of 234.2 kc or of 0.1 f_o.

The frequency scheme and frequency synthesizing techniques used by SCI in the AROD Transponder provide the

capability of meeting the frequency versatility requirements to meet both cases mentioned above with a minimum of circuit redesign. The basic frequency scheme utilizes a completely coherent phase-lock receiver with a wide-band product demodulator; the receiver is then followed by a coherent transmitter output frequency synthesizer. The frequency versatility is obtained primarily through use of PCO (pulse controlled oscillator) multipliers which have the ability to selectively multiply an input frequency by consecutive high-order integers including prime number integers such as 19, 29, etc. The details of the overall frequency scheme will be covered in the following sections; however, the basic elements of the synthesis technique will be described in this section.

Consider first the coherent frequency divider illustrated in Figure 5. This method of frequency division utilizes a phase-lock loop with a multiplier in the reference signal path from the VCO to the phase detector. An advantage of this type frequency divider is that spurious signals have minimal effect on the VCO output, and the noise bandwidth can be reduced by the loop filter when this is consistent with tracking requirements of the coherent divider. The diagram shown illustrates a divide-by-24 loop similar to those used in the Transponder.

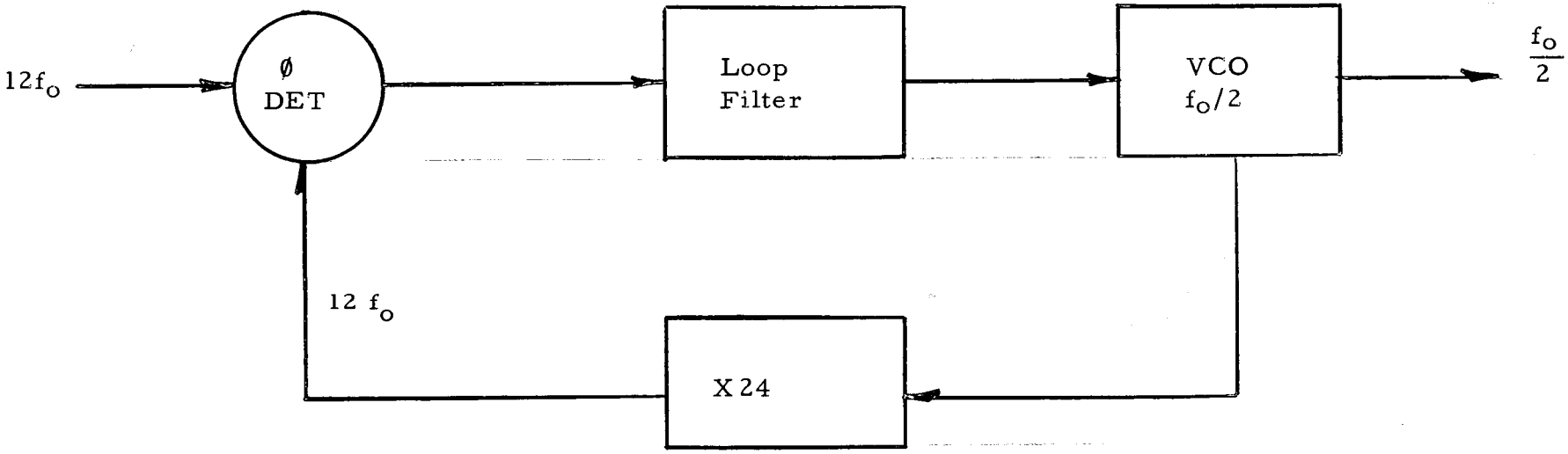

Figure 5. Phase Locked Frequency Divider.

Next consider the coherent multiplier shown in Figure 6. This multiplier consists of a PCO which does the actual multiplying, and a phase-lock loop which selects the desired output frequency component from the PCO and rejects all unwanted frequency components. The PCO-type multiplier has the interesting property of producing an output spectrum with frequency components which are exact integral multiples of the input frequency. By proper choice of duty cycle, oscillator tank Q, and other factors, it is possible to emphasize a particular desired output frequency to the extent that its amplitude will be only a few db (i.e., 3 to 6 db) less than the amplitude of the oscillator output when it is playing as a free-running oscillator. The exact frequency to be emphasized in the PCO output spectrum is determined by the resonant frequency of the PCO tank circuit. Thus, the PCO in Figure 6 is set to emphasize the 19th multiple of the input frequency. If it is desired to change the PCO multiplying factor to 23 for example, the only change required is a retuning of the PCO oscillator tank circuit to 11.5 f_o.

The phase-lock loop following the PCO multiplier is therefore designed to respond to only the desired frequency component in the PCO output. Thus, the phase-lock loop at 9.5 f_o in Figure 6. To change to a multiplying factor of 23 (instead of 19),

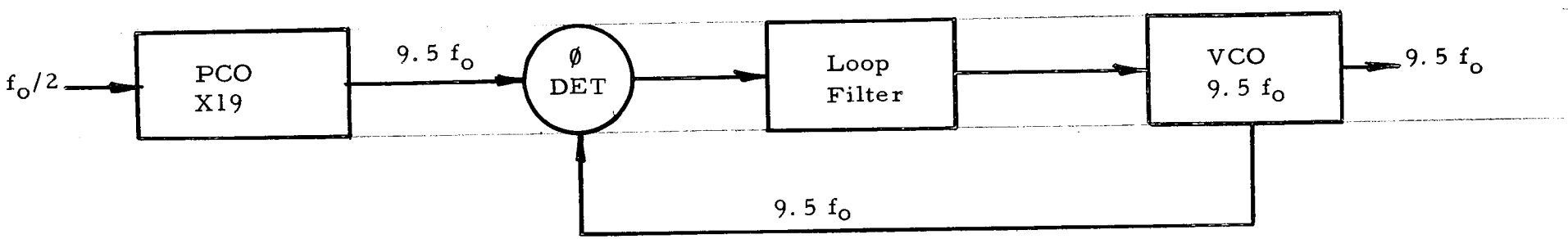

Figure 6. PCO Multiplier and Phase Locked Loop Filter

the phase-lock loop VCO operating frequency would have to be changed to 11.5 f_o. By use of crystal-controlled VCO circuits in the phase-lock loops, the pulling range of the VCO can be limited to assure lock-on only at the desired output frequency component from the PCO. Thus a clean, coherent, high level signal may be obtained which is a high-order multiple of the input frequency. The multiplying factor can be changed quite easily without significant redesign effort and therefore this scheme is particularly appropriate for the AROD Transponder.

Next the problem of providing the versatility necessary to allow frequencies to be moved in 1/4 f_o and 0.1 f_o increments will be considered. Since 1/4 f_o is a binary fraction and 0.1 f_o is a decimal fraction, it is necessary to find a starting frequency which can be utilized to provide the required binary and decimal increments on the output frequency with relatively simple circuitry. Consideration of all related factors indicates an input frequency of $\frac{1}{2} f_o$ to a PCO multiplier, followed by a phase-lock tracking loop containing either a X2 or X5 multiplier in the reference input will provide the required versatility. Figure 7 illustrates the method of obtaining output frequencies in 1/4 f_o increments. The frequencies shown in the figure provide the output frequency of 30 f_o. The next higher frequency

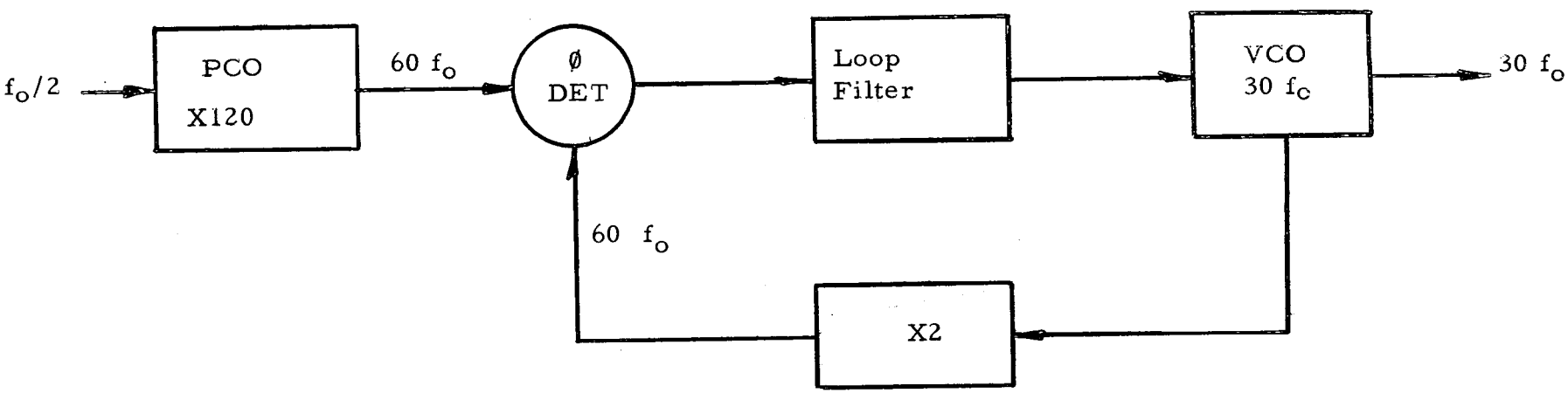

Figure 7. PCO Multiplier Scheme Capable of Providing Output Frequencies in Increments of 1/4 f_o

which might be required is 30.25 f_o, (30 f_o + 1/4 f_o). This output frequency of 30.25 f_o would be obtained in the following manner: A new crystal with 30.25 f_o center frequency would be placed in the VCO instead of the 30 f_o crystal. The X120 PCO would be retuned slightly to emphasize the 121st harmonic instead of the 120th. Thus the inputs to the phase detector would be 60.5 f_o from the PCO (1/2 f_o X121) and 60.5 f_o from the X2 multiplier (30.25 f_o X2). The new output frequency would now be 30.25 f_o as required. In a like manner, any other output frequency can be selected at any desired multiple of 1/4 f_o.

The method of obtaining frequencies in increments of 0.1 f_o is shown in Figure 8. The frequencies shown provide an output frequency of 2.4 f_o. The next higher frequency which might be required is 2.5 f_o, (2.4 f_o + 0.1 f_o). This output frequency of 2.5 f_o would be obtained in the following manner: A new crystal with 2.5 f_o center frequency would be placed in the VCO instead of the 2.4 f_o crystal. The X24 PCO would be retuned slightly to emphasize the 25th harmonic instead of the 24th. Thus the inputs to the phase detector would be 12.5 f_o from the PCO (1/2 f_o X25) and 12.5 f_o from the X5 multiplier (2.5 f_o X5). The new output frequency would now be 2.5 f_o as required. In a like manner, any other output frequency can be selected at any desired multiple of 0.1 f_o.

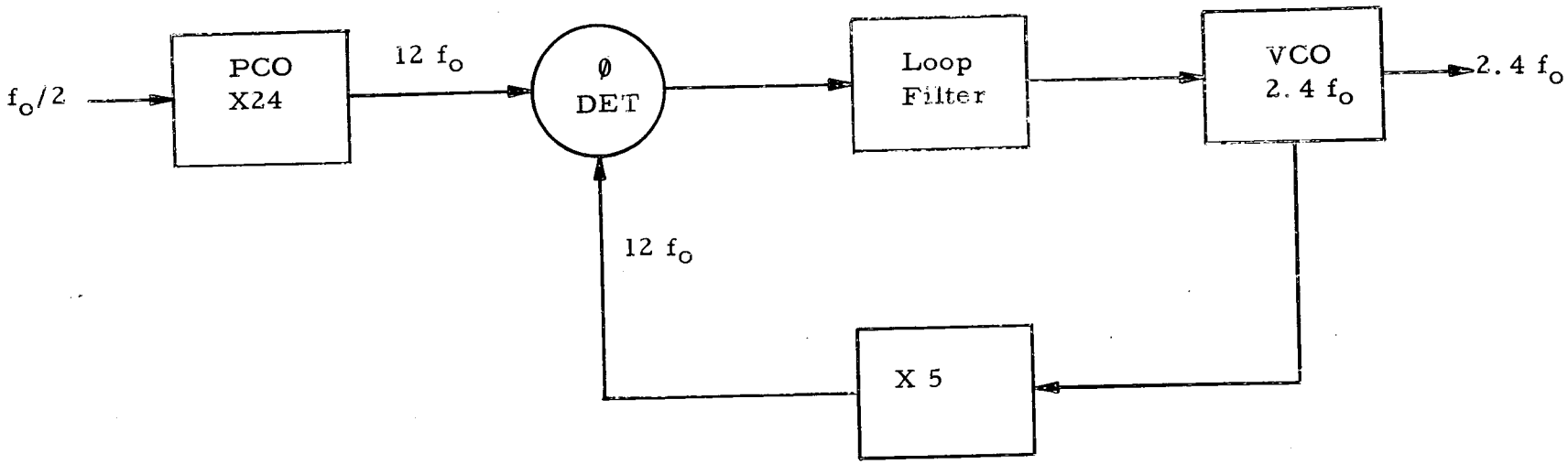

Figure 8. PCO Multiplier Scheme Capable of Providing Output Frequencies in Increments of 0.1 f_o

III. RECEIVER

1. Frequency Scheme

A simplified block diagram illustrating the Transponder Receiver frequency scheme is shown in Figure 9. The frequencies and multiplying factors shown in the block are for the specified operating frequency of 972 f_o. Small changes in operating frequency could be implemented by changing only the X76 multiplying factor. This would be accomplished by changing the PCO multiplier loop as described in the previous section. As an example, suppose it is desired to change the operating frequency to 972.25 f_o, (972 f_o + 1/4 f_o). The X76 multiplier would be changed to provide a 38.25 f_o output signal. The receiver input signal of 972.25 f_o would mix with the first mixer injection signal of 928 f_o to produce a first IF frequency of 44.25 f_o. The 44.25 f_o would mix with the 38.25 f_o at the second mixer to produce a second IF carrier frequency of 6 f_o. The remaining circuitry would perform as originally with no additional changes required. The slight change of +0.25 f_o in the first IF frequency would be negligible in terms of the wide IF bandwidth of 10 mc or more. Larger changes in operating frequency could be handled in the same manner but with the additional requirement that the first

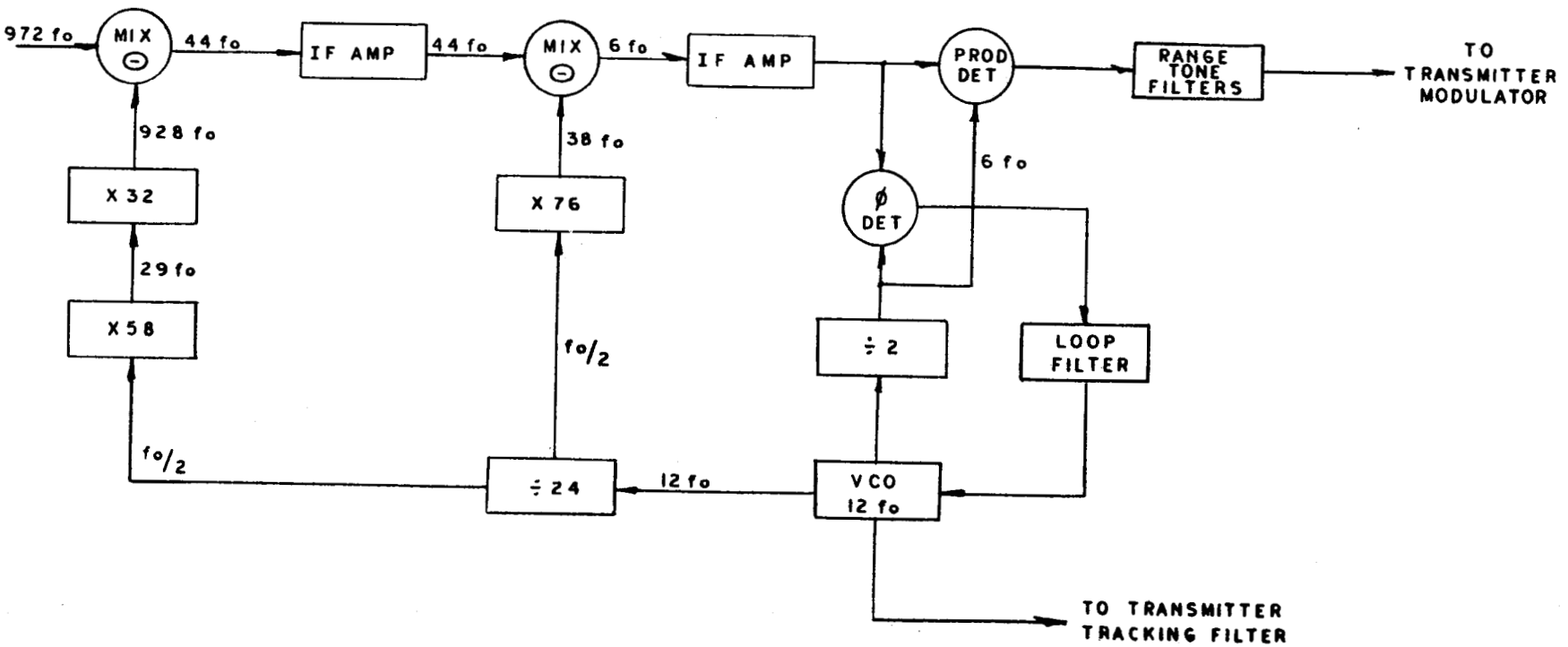

FIG. 9
SIMPLIFIED BLOCK DIAGRAM OF
AROD TRANSPONDER RECEIVER

IF section would have to be retuned to center around the desired operating frequency.

Several additional features and characteristics of the frequency scheme shown in Figure 9 will be discussed briefly in the following paragraphs. The receiver is a completely coherent type utilizing a single VCO to obtain all necessary mixer and detector injection frequencies. A separate wide-band correlation-type product detector is employed to extract the range tones from the last IF amplifier signal in a near-optimum manner at the low signal-to-noise ratios present in the AROD system. The range tones are then individually filtered to reduce the noise bandwidth associated with each tone so that the best possible signal-to-noise ratio is achieved before retransmission of the range tones by the Transponder. Details of the phase-shift requirements of the IF amplifiers and range tone filters will be discussed in a later section.

The VCO frequency, first IF frequency, and second IF frequency have been carefully selected for optimum overall performance with respect to bandwidths, RF interference, spurious responses, available gain, crystal filter availability, operating frequency versatility, and simplicity of S-band multiplier and VCO circuit design. The first IF frequency of 44 f_o

(103.048 mc) is high enough to provide sufficient bandwidth and low enough to allow adequate gain-per-stage with transistorized circuitry. Also, 44 f_o is high enough to allow sufficient image rejection to be obtained in the RF circuits, and low enough to achieve satisfactorily low spurious output signals from the first mixer. The exact value of 44 f_o is carefully chosen to fall between high-level oscillator signals and high-level low-order harmonics of oscillators or high-level amplifiers anywhere in the AROD Transponder. Thus the shielding requirements necessary to keep interference-producing signals out of the first IF amplifier low-level stages are minimized.

The VCO frequency of 12 f_o (28.104 mc) was selected in conjunction with the overall frequency scheme, first and second IF frequencies, desirable crystal VCO stability and pulling characteristics, and the somewhat intangible requirement of being composed of suitable factors of 3 X 2 X 2 X f_o. These factors allow selection of appropriate IF frequencies and the use of a frequency scheme employing a series of frequency doublers in the solid-state S-Band Multiplier. Since solid-state (varactor) doublers are more efficient and more easily designed than higher order multipliers such as triplers or quintuplers, this last requirement is rather important. The multiplier actually used is a X32 (4 X 4 X 2),

which receives an input frequency of 29 f_o and provides the required output signal at 928 f_o. An additional requirement on the VCO frequency is that it should be exactly twice the last IF frequency in order to simplify the synthesis of injection signals for the receiver detectors while keeping all high-level oscillator signals different from the last IF frequency to avoid interference. Considerable juggling of numbers was necessary before arrival at the scheme shown; however, it appears that this scheme is near-optimum in terms of overall system and individual circuit design considerations.

2. Bandwidth and Phase Shift Considerations

The bandwidth and phase shifts to be discussed in this section include the receiver phase-lock loop bandwidth, the IF amplifier bandwidths, and the post-detection bandwidth; the effect of these bandwidths on the relative phase shifts of the carrier and first order sidebands will be considered. Factors affecting relative phase shift and depending somewhat on bandwidths include differential Doppler shifts on the carrier and first order sidebands, temperature stability of tuned circuits or crystal filters, and center-frequency shift of tuned circuits or filters due to application of AGC to the associated amplifier stages. Each

of these problems must be considered in conjunction with overall system requirements which determine maximum allowable phase shift variations and maximum allowable noise bandwidths. The phase shift due to AGC can be minimized by proper choice and design of each controlled stage and by controlling only stages with wide bandwidths. The AGC system will be described in a later section. Temperature-induced phase shifts are relatively small except in narrow-band filters; therefore, it would be desirable to keep this factor in mind when considering possible solutions to the major phase shift problem caused by differential Doppler shifts.

Since Doppler frequency shift is proportional to frequency, if two frequencies are received at the same place, the highest frequency will have the greatest absolute change due to Doppler. If the two frequencies are then passed through a common filter having a linear phase characteristic, the highest frequency will have its relative phase shifted by a larger amount than the lower frequency. In the AROD Transponder Receiver, a different phase shift on the upper and lower sidebands results in a phase shift on the demodulated range tones. With the completely coherent receiver, this phase shift is much smaller than with a receiver using a fixed reference oscillator; but even with

the coherent receiver and most of the filtering at the lowest IF frequency where the Doppler shift is lowest, the amount of phase shift introduced into the fine range tone (FR1) will be too high to obtain the desired range resolution. One might at first think the required filtering could be obtained after detection at the range tone frequencies. However, a look at the signal-to-noise ratios confronting the detector and the filter at the range tone frequencies indicates that this approach would be highly questionable. Calculations of phase shift introduced by a 100 cps bandwidth passive filter at 2.342 mc indicate the need for a phase-lock loop tracking filter with high loop gain to hold the phase shift down to an acceptable value. However, the phase lock loop required could not operate satisfactorily at the highly negative signal-to-noise ratio which would be present if no predetection narrow-band filtering is employed. This seemingly impossible situation has been resolved by use of five separate crystal filters with relatively narrow bandwidths and with phase slopes inversely proportional to center frequency. Thus the phase shifts on the sidebands and carrier can be equal in absolute value so that the net effect on the demodulated range tones is no relative phase shift whatever. The center frequencies and approximate bandwidths of the five proportional phase slope crystal filters are shown in Figure 10. The bandwidths are

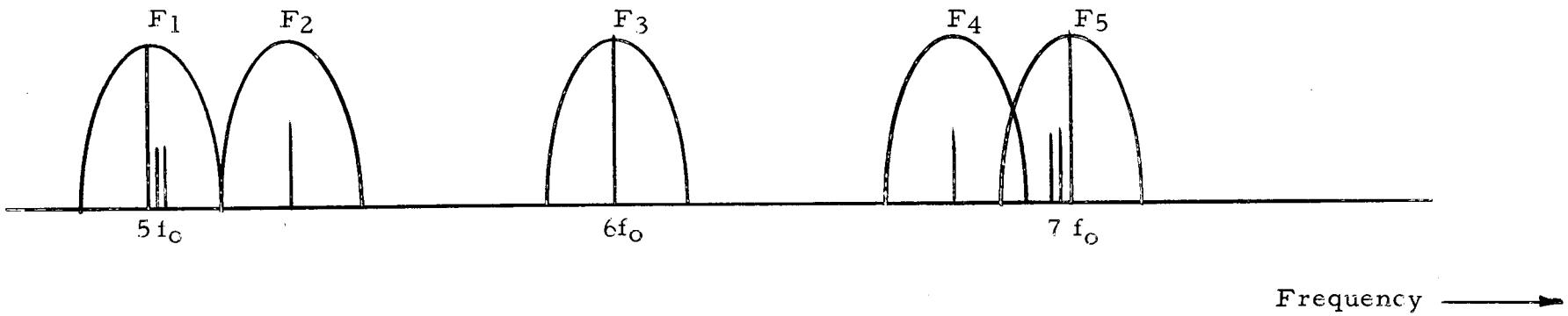

Figure 10. Bandwidths of Filters to Achieve Phase Slopes Inversely Proportional to Center Frequency.

Filter F_1: $BW_{3\,db} \approx 10$ KC

F_3: $BW_{3\,db} = \frac{6}{5} \times 10$ KC

F_5: $BW_{3\,db} = \frac{7}{5} \times 10$ KC

F_2 & F_4: Bandwidths proportional to center frequency using F_1 bandwidth as a reference.

not necessarily drawn to scale and are to be considered for illustrative purposes only.

3. Demodulator

The wide-band product demodulator receives a reference signal from the VCO through a divide-by-2 circuit. The performance of the demodulator in translating the sidebands to the range tone frequencies is similar to that of the other mixers in the receiver. Since the reference signal is relatively free from noise as a result of the requirement for good signal-to-noise ratio in the main phase-lock loop, the product demodulator introduces significantly less noise into the demodulated range tones from noise-X-noise products than would be introduced by any type of envelope or discriminator detector.

The function of a product demodulator as a phase-sensitive detector such as is needed in the main receiver loop phase detector may be illustrated in the following manner: Suppose the desired input signal is represented by $E_1 \sin (wt + \theta)$ and the reference input signal is represented by $E_2 \cos wt$. The product is:

$$\left[E_1 \sin (wt + \theta)\right] \left[E_2 \cos wt\right]$$

which by use of trigonometric identity is:

$$\frac{E_1 E_2}{2} \left[\sin (wt + \theta + wt) + \sin (wt + \theta - wt) \right]$$

which is:

$$\frac{E_1 E_2}{2} \sin (2wt + \theta) + \sin \theta$$

The first term is a double frequency term and can be removed easily by use of a low-pass filter. If the amplitudes E_1 and E_2 are then held constant, the resulting output is:

$$\frac{E_1 E_2}{2} \sin \theta = K \sin \theta$$

where K is a fixed constant. Thus, the product detector output is directly proportional to sin θ where θ was the original phase difference or modulation of the input signal.

4. <u>AGC System</u>

The Transponder uses a coherent AGC system which provides control in accordance with the actual received carrier signal and does not respond to noise. A product demodulator is employed to achieve this type AGC system. The demodulator is similar to the phase detector described in the previous section except that the reference signal from the VCO and divider has

been shifted in phase by 90 degrees with respect to the phase detector reference signal. Thus, the performance may be illustrated by the following equations where $A_1 \sin(wt + \theta)$ is the input signal and $A_2 \sin wt$ is the reference signal:

$$\left[A_1 \sin(wt + \theta)\right] \left[A_2 \sin wt\right]$$

$$= \frac{A_1 A_2}{2} \left[\cos(wt + \theta - wt) \pm \cos(wt + \theta + wt)\right]$$

$$= \frac{A_1 A_2}{2} \left[\cos \theta \bullet \cos(2\,wt + \theta)\right]$$

Now if θ is a small angle of 25 degrees or less, if A_2 is held constant, and if a low-pass filter is used to remove the 2 wt component, the output of the detector will be proportional to the amplitude (A_1) of the input signal. Small phase errors less than 25 degrees have very little effect on the output amplitude since the cosine function is still nearly equal to unity for small angles. Therefore, the product detector output amplitude may be used to provide the coherent AGC control voltage. This AGC voltage is applied only to wide-band amplifier stages so that phase errors in the modulation tones due to AGC are minimized.

5. Receiver Acquisition

The receiver main phase-lock loop noise bandwidth

($2B_L$) is 300 cps. This particular value has been selected as low as possible consistent with the ability to track a maximum Doppler acceleration of 3 kc/sec^2. The applicable equation can be shown to be:

$$\phi = \frac{101.2\,\dot{f}}{B_L^{\,2}} + \frac{360\,\dot{f}\,t}{G_o}$$

where:

ϕ is loop phase error due to Doppler acceleration

$\dot{f} = \frac{df}{dt}$ = Doppler acceleration

B_L = one-sided loop noise bandwidth

t = time in seconds

G_o = open loop gain

The second term is quite small due to the large value of G_o and the small value of t during which $\dot{f}$ is significantly large. Therefore, a loop noise bandwidth of 300 cps will produce a phase error of approximately:

$$\phi = \frac{101.2 \times 3000}{(150)^2} = \frac{300,000}{22,500} = 13.3 \text{ degrees.}$$

The maximum Doppler offset error expected at 2276 mc is approximately ±80 kc. The loop pull-in range can be safely estimated to be equal to the loop noise bandwidth so that acquisition

will be assured if the received carrier frequency is within ± 300 cps of the nominal carrier frequency without Doppler offset. However, this criterion indicates that the loop will not lock up with Doppler offset unless some means of presetting or sweeping the VCO frequency is provided. The maximum sweeping rate would be less than 3 kc/sec^2 as shown above and therefore, the minimum sweeping time required to sweep a total range of 160 kc (± 80 kc) would be $\frac{160 \text{ kc}}{3 \text{ kc}}$ or 53 seconds. Since the maximum time allowed for acquisition has been specified to be as short as possible with an expected goal of less than 1 second, it is apparent that a sweeping method of acquisition will not be satisfactory. Several methods of presetting the VCO to the correct frequency to assure pull-in of the main loop were considered and rejected for various practical reasons. The method finally adopted is quite straightforward and fool-proof. The method used requires a reference signal which contains the Doppler offset information. Such a signal can be made available at the VCO frequency of 12 f_o from the Command Receiver at the transponder site. The required signal will be available if the Command Receiver is designed to be frequency coherent and to use a VCO at 12 f_o. The Command Receiver VCO will thus provide preset information for the Transponder Receiver VCO. This scheme will work because the command-link

frequency is also coherently derived from the basic 2.342 mc frequency standard in the vehicle. However, it should be noted that the command link modulation method must be compatible with coherent operation of the command receiver, or else separate provision must be made for obtaining a clean carrier signal to the Common Receiver during acquisition. Detailed discussion of the acquisition circuitry and methods will be postponed to a later section so that overall Transponder acquisition may be covered at one time.

IV. RANGE TONE FILTERS

1. General

The proportional phase slope crystal filters in the receiver last IF will reduce the noise bandwidth to approximately 70 kc at the product demodulator output. However, the noise power in this bandwidth is still far too large to allow retransmission of relatively clean noise-free range tones. Therefore, it is necessary to provide narrow-band filters at each individual range tone to reduce the noise bandwidth to approximately 100 cps around each range tone frequency component. A quick calculation of phase shift due to Doppler offset and temperature effects eliminates passive filters (L-C, crystal, etc.) from consideration at the 2.342 mc and the 2.2688125 mc range tone frequencies. In particular, the maximum allowable phase shift of approximately ±0.5 degrees on the 2.342 mc fine range tone cannot be achieved with ordinary passive filters. To illustrate, consider a single-section crystal filter with a 3 db bandwidth of 60 cps (noise bandwidth of approximately 100 cps). The Doppler shift at 2.342 mc is about ±82 cps; therefore, if this signal is passed through the above filter having a 3 db bandwidth of ±30 cps, the phase error will greatly exceed ±45 degrees on the fine range tone. The error is several orders

of magnitude greater than the desired maximum of ±0.5 degrees.

Several approaches to the phase error problem in narrow-band filters were considered and rejected before the conclusion was reached that the required low phase shift could be obtained most simply by suitable phase-lock tracking filters at 2.342 mc and 2.2688125 mc. The 1.107 kc and 1.179 kc range tone components are then removed from the fine range tone by the 2.342 mc loop phase detector. These two low-frequency components are then passed through special temperature-compensated active filters with noise bandwidths of approximately 100 cps.

2. <u>2.342 mc Filter</u>

The open-loop gain (G_o) required to hold phase shift down to 0.5 degrees with ±82 cps Doppler frequency offset is determined as follows:

$$G_o = \frac{360\,\Delta f}{\Delta \phi} = \frac{360 \times 82}{0.5} = 59,000$$

The open loop gain is also:

$$G_o = 360\, K_V\, K_\phi\, AM$$

where:

K_V = VCO gain in cps/volt

K_ϕ = phase detector gain in volts/degree

A = required DC amplifier gain

M = multiplication ratio

Realizable values of 120 cps/volt for K_V, 0.0167 volts/degree for K_ϕ, and a value of 1 for M lead to the following requirement for A:

$$A = \frac{G_o}{360\ K_V\ K_\phi\ M} = \frac{59,000}{360 \times 120 \times 0.0167} = 82$$

This value has been rounded off to 100 for the required gain of the loop DC amplifier. Thus phase error will be somewhat less than 0.5 degrees and the loop noise bandwidth can be 100 cps. The loop filter time constants for a standard second order loop with 2 B_L of 100 cps are:

$$t_1 = \frac{9\ G_o}{32\ B_L^2} = \frac{9(59,000)}{32\ (50)^2} = 6.62 \text{ sec}$$

$$t_2 = \frac{3}{4\ B_L} = \frac{3}{4 \times 50} = 15 \text{ milliseconds}$$

The relatively large time constant for t_1 would require a rather large and expensive filter capacitor in this loop. Therefore, an operational-type active loop filter is employed to reduce the capacitor size required and to improve overall loop performance over that

of a standard second order loop. The active filter is easy to implement by simply making the DC amplifier a phase-inverting operational amplifier which is short-circuit stable. The desired filter characteristics are then obtained by suitable feedback circuitry.

3. 2.2688125 mc Filter

Since the FR2 tone which is derived from the 2.2688125 mc frequency component is used only to resolve ambiguity in the phase measurement on the FR1 fine range tone, the allowable phase error is somewhat larger in the 2.2688125 mc filter than in the 2.342 mc filter. A full cycle of the 2.342 mc tone corresponds to $\frac{360}{32}$ or 11.2 degrees on the FR2 range tone. Therefore, the phase error on FR2 in the entire AROD system must be kept below approximately ±5 degrees to allow ambiguity resolution of the fine range tone measurement. If half the allowable error is assigned to the Transponder and half to the vehicle system, the maximum allowable error is ±2.5 degrees in the Transponder. With the present transponder design, there are two major areas where phase error may occur on this tone: (1) in the receiver second IF proportional phase slope filters, and (2) in the 2.2688125 mc phase-lock loop. The proportional phase filters should not

contribute more than ±0.25 degrees; therefore, the allowable error in the phase lock loop could possibly be allowed to reach about ±2 degrees. Therefore, the 2.2688125 mc loop is made similar to the fine range tone loop except for the use of a limiter stage preceeding the phase detector in the 2.2688125 mc loop. The limiter loop has somewhat better dynamic range and transient performance which are helpful in this loop because of the smaller available signal power in the 2.2688125 mc sideband components. However, the reduction in loop gain caused by the limiter signal suppression at poor signal-to-noise ratios results in a maximum static phase error of ±1.44 degrees. This is below the ±2 degrees allowable error discussed above.

4. 1.107 KC and 1.179 KC Filters

The Doppler offset of approximately ±0.36 cps at these frequencies is relatively insignificant for a filter bandwidth of 60 cps. However, the effect of temperature on center frequency of ordinary L-C or active R-C filters is too great to maintain the required low phase shift of ±2 degrees. More stable devices such as crystals, tuning forks, or magnetostrictive rods generally have very high Q which is not compatible with 60 cps 3 db bandwidths and which causes excessive phase error if very

narrow bandwidths are used.

The filters finally selected for this application employ special temperature-stabilized cores and selected temperature-compensating capacitors in an active filter feedback loop Q multiplier. A phase error of less than ±2 degrees on each tone with approximately 100 cps noise bandwidth for each tone is obtained.

V. SITE IDENTIFICATION GENERATOR

Since several transponder sites are used in the AROD tracking system and each transponder may transmit on any one of the four channels, it is necessary to provide a means of identifying the particular transponder site from which a signal is being received. The method selected for accomplishing the required identification is to key the 2.2688125 mc range tone component on and off with a pulse train from the site Command Logic system. The existing range tone component at 2.2688125 mc could be keyed to provide the identification signal; however, the evaluation model Transponders use a separate 2.2688125 mc crystal-controlled oscillator to insure a noise-free signal for the identification modulator. The crystal oscillator is used only during site identification and is switched off at all other times. The 2.2688125 mc range tone component is temporarily switched off during the site identification mode of operation and is turned back on when the Transponder is placed in the operate mode. Likewise, the 1.107 kc and the 1.179 kc components are switched off during the site identification mode.

VI. TRANSMITTER EXCITER

1. Frequency Scheme

A simplified block diagram of the Transponder Exciter frequency scheme is shown in Figure 11. The frequencies and multiplying factors shown in the block are for the specified operating frequencies for the four transmit channels. The carrier frequencies corresponding to the four channels are shown on the block diagram at the extreme right side. The channel-selection switch is shown in the Channel 2 position and the frequencies corresponding to this channel are underlined at the two mixer outputs. The frequency scheme is similar to that used in the receiver in that PCO type multipliers are used with provisions for changing the output frequencies in 0.1 f_o increments from the individual channel multipliers and in 1/4 f_o increments for the entire group of output frequencies.

The operation of the PCO multipliers is discussed in Section II, Paragraph 3 and will not be repeated in detail here. However, examples illustrating the method of changing channel spacing and transmitter output frequencies will be given. Suppose it is desired to change the Channel 2 output by a single 0.1 f_o increment. This could be accomplished by changing the input to

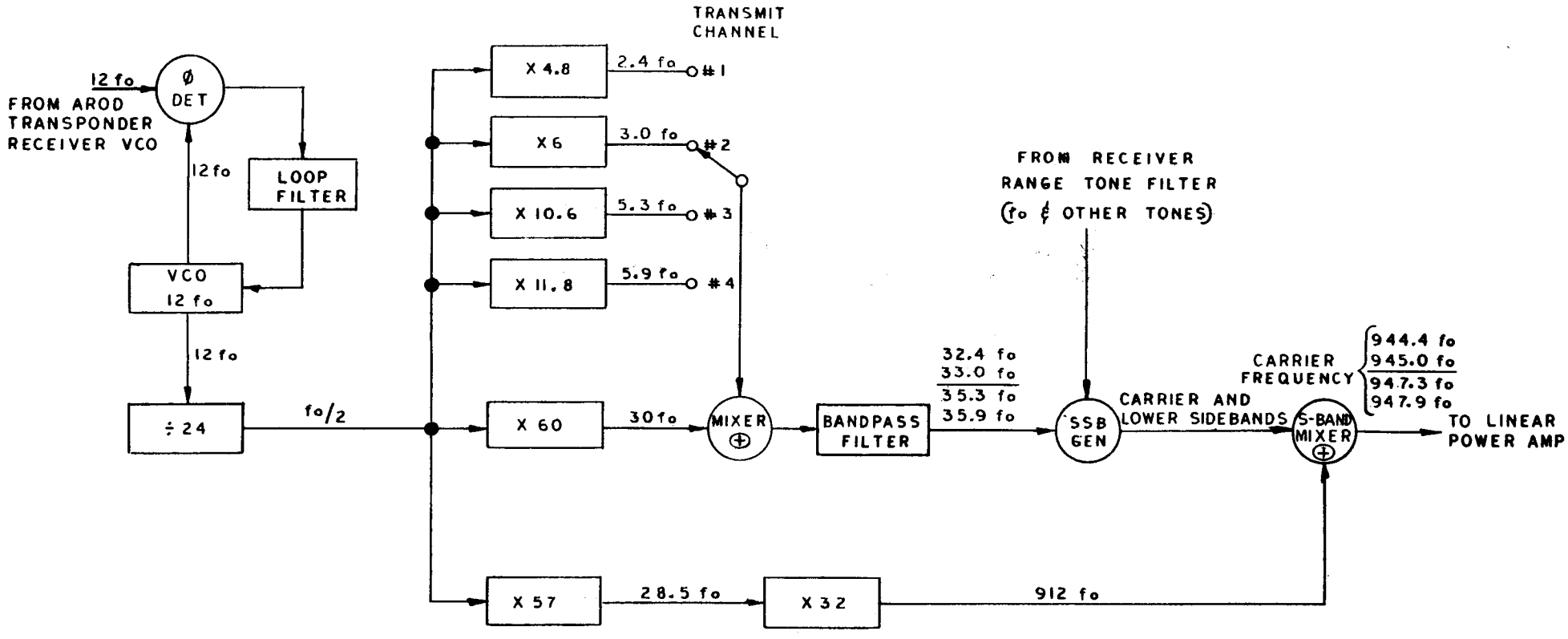

FIG. 11

SIMPLIFIED BLOCK DIAGRAM OF AROD TRANSPONDER EXCITER

the first mixer from 3.0 f_o to 3.1 f_o. The additional 0.1 f_o would be carried through both mixers to the output and would result in changing Channel 2 from 945.0 f_o to 945.1 f_o. The change from 3.0 f_o to 3.1 f_o would be accomplished in the X6 multiplier in the manner described in Section II. Similarly, any other channel could be changed in increments of 0.1 f_o by changing the corresponding multiplier by the desired amount.

A change of the entire output spectrum frequency by 1/4 f_o increments will be illustrated next. Suppose it is desired to move the entire output spectrum up in frequency by 1/4 f_o. This could be accomplished by changing the X60 multiplier so that the output frequency becomes 30.25 f_o, (30 f_o + 1/4 f_o). Each of the output frequencies from the first mixer would be moved up by 1/4 f_o and consequently, each component in the output spectrum would also be moved up by 1/4 f_o. An additional change involving the filter following the first mixer would also have to be considered if the entire output spectrum were to be changed. However, once the final operating frequencies are determined, no further changes in the filter will be necessary. Very large changes in output frequency (e.g. 50-75 mc) would be accomplished by changing the X57 multiplier, the X32 multiplier frequency, and possibly the last mixer. These changes would require some modifications of individual circuit com-

ponents, but would not require any major redesign or any change in synthesizing philosophy.

2. Tracking Filter

The method of obtaining frequency coherence between the received signal and the transmitted signals employs a VCO in the transmitter section which operates at the same frequency as the receiver VCO, ($12\ f_o$), and a phase-lock loop to hold the transmitter VCO on exactly the same frequency as the receiver VCO. All transmitter output signals are derived coherently from the transmitter VCO so that the entire system is frequency coherent. The phase-lock loop bandwidth is large enough to insure essentially instantaneous lock-in of the transmitter VCO with the largest anticipated Δf on the signal from the receiver VCO. Since the carrier phase is not presently used to obtain either range data or relative velocity data, the tracking loop phase error need only be small enough to insure reliable lock-in and hold-in at the greatest expected Δf and with the poorest expected signal to noise ratio. A reasonable and fairly conservative allowable phase error of 40 degrees keeps the loop circuit design parameters, gain, etc. in the realm of practicality. The required loop gain

$$G_o = \frac{360\ \Delta f}{\Delta \phi} = \frac{360 \times 1000}{40} = 9,000$$

can be obtained without the use of a supplemental amplifier since

$$G_o = 360\ K_V\ K_\phi\ AM$$

and realizable values of

$$K_V = 300 \text{ cps/volt}$$

$$K_\phi = 0.0833 \text{ volts/ degree}$$

$$A = 1$$

$$M = 1$$

give an open loop gain of 9,000. The loop noise bandwidth is approximately 1200 cps to insure fast lock-in with the anticipated ± 1000 cps Δf. An approximation of the maximum lock-in time for a 1000 cps frequency offset can be obtained from the following equation:

$$t = \frac{4(\Delta f)^2}{B_L^3}$$

$$t = \frac{4(1000)^2}{(600)^3} = 0.0185 \text{ seconds.}$$

However, it will be shown in a later section that during acquisition, this VCO will have to be changed by 2 Δf so that the lock-in time will be four times the number shown above or 0.0740 seconds.

3. Transmitter Modulator

The spectrum shown in Figure 4 must be generated from the baseband spectrum arriving from the Range Tone Filters. This baseband spectrum is somewhat different from the original baseband spectrum shown in Figure 2 for practical reasons involving the required complexity of the Range Tone Filter and modulator circuitry.

The 1.107 kc and 1.179 kc components are first filtered to remove excessive noise and then are recombined with the 2.342 mc component in a circuit consisting of a balanced mixer and a linear adder for reinserting the 2.342 mc component with the correct phase relationship. If a filter were employed to remove one set of sidebands at the balanced mixer output, excessive phase errors would be introducted into the fine range tone component by varying Doppler frequency offsets. Therefore, it was concluded that the simplest solution is to keep both sets of sidebands and to reduce the sideband amplitudes enough to keep the total sideband power the same as it was in the original baseband spectrum. The original baseband spectrum could have been retained by use of a phasing-type sideband generator in place of the single balanced mixer. However, the resulting circuitry would have been

considerably more complex.

Practical consideration of filter design and phase errors due to Doppler offset preclude the use of a filter-type sideband generator in the next stage of the transmitter modulator to produce the desired transmitter output spectrum from the new baseband spectrum discussed above. Therefore, the system shown in Figure 11 employs a phasing-type sideband generator to produce the required RF spectrum at a relatively low frequency. No narrow-band error-producing filters are required in the system shown. Once the required RF spectrum is obtained at the relatively low frequency, a frequency translation of the entire spectrum by the second mixer places the spectrum at the desired output frequency. In order to maintain the desired relationship between spectrum components and to provide the output spectrum shown in Figure 4, it is necessary to remove the carrier at 912 f_o and the lower sidebands produced by the second mixer. The carrier is removed by use of a balanced mixer and the lower sidebands by use of a filter. Phase errors introduced by the phasing-type sideband generator and the output filter are negligible as far as any effect on the final range accuracy is concerned.

4. Frequency Acquisition and Doppler Compensation

The overall system acquisition will be discussed in detail in the next section. However, a brief summary of the transmitter acquisition requirements and the methods used will be included here. During acquisition, the transmitter VCO is offset by the amount of the Doppler (one-way) so that the signal arriving at the Vehicle Tracking Receiver will be within the pull-in range of its main phase-lock loop. After acquisition is established, the transmitter VCO is shifted back to the Transponder Receiver VCO frequency. The initial transmitter VCO offset is accomplished by a Doppler reverser circuit which translates the Doppler shift on the Command Receiver VCO to a frequency on the other side of the nominal center frequency by an amount equal to the Doppler shift. A simple method of producing Doppler reversal is shown in Figure 12. The VCO nominal center frequency in the absence of Doppler is 12 f_o. An input signal to the mixer containing a positive Doppler shift of f_d is combined with the output of a stable reference oscillator at 24 f_o. The input signal is balanced out and does not appear in the output. The difference frequency of 24 f_o - (12 f_o + f_d) produces an output frequency of 12 f_o - f_d which is the input signal with the sign of the Doppler shift reversed. Practical considerations dictate the use of a somewhat different approach to achieve the required

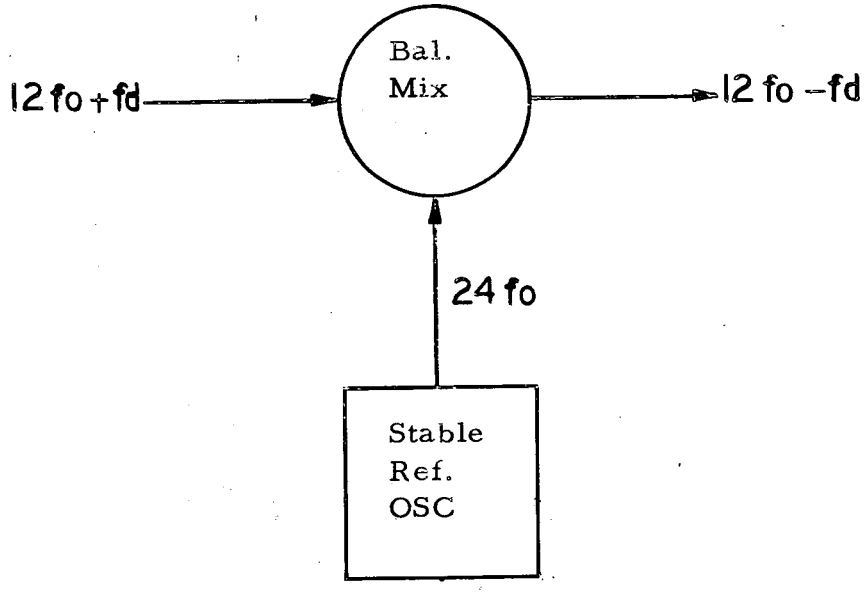

Figure 12. Block Diagram Illustrating Simple Method of Achieving Doppler Reversal

Doppler reversal. The system used in the AROD Transponder is shown in Figure 13. The stable reference oscillator at 8 f_o is combined with the input signal of 12 $f_o + f_d$ in the first mixer to produce an output of 20 $f_o + f_d$. This output is combined with the fourth harmonic (32 f_o) of the reference oscillator in the second mixer to produce an output of 12 $f_o - f_d$. Of course, the sign of the Doppler shift will be reversed with either positive or negative Doppler shift on the input signal. The process of Doppler reversal and lock-in of the transmitter VCO on the signal with Doppler reversed is called Doppler Compensation in the AROD system. The switching from compensated Doppler to straight Doppler is provided by control signals from the AROD Command Logic associated with the Command Receiver at each transponder site.

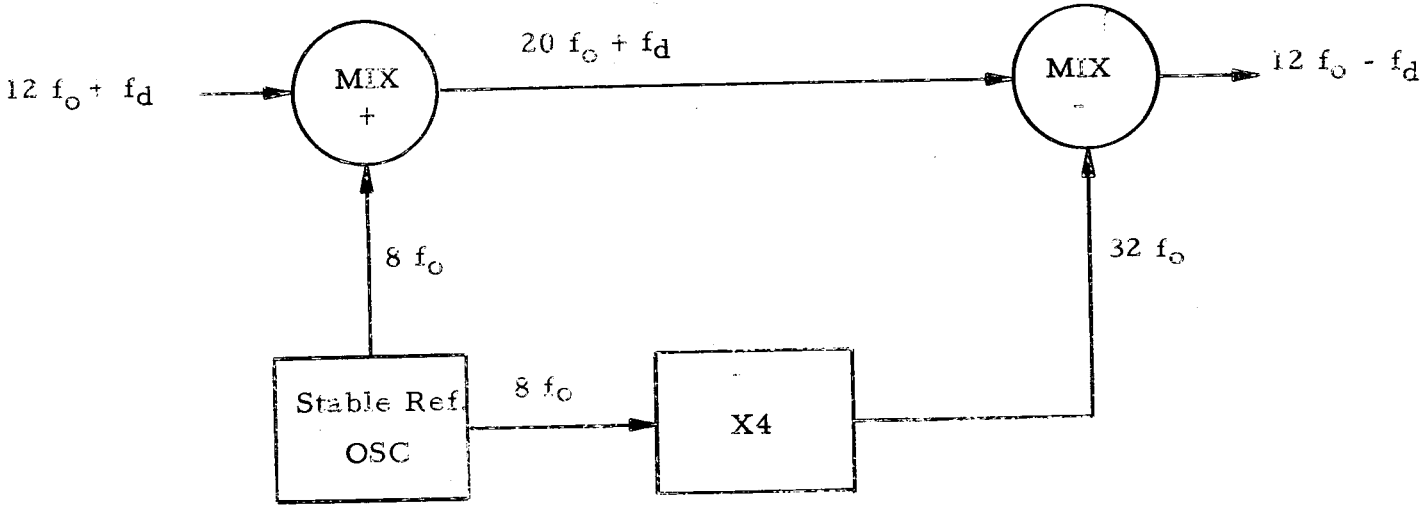

Figure 13. Block Diagram Illustrating a Practical Method of Doppler Reversal

VII. SYSTEM ACQUISITION

1. Operating Modes

Four distinct operating modes are involved in the operation of the AROD Transponder. These modes and the major identifying features of each are listed below:

Mode 1: Off

(a) Transponder Off

(b) Crystal Oven On

(c) Command Receiver On

Mode 2: Standby

(a) Transponder Receiver On

(b) Transponder Exciter On

(c) Transponder Transmitter in Standby

(d) Transponder Receiver Acquisition Occurs

(e) Transponder Exciter Doppler Compensation Applied

(f) Transponder Exciter Operating Frequency (Channel) Selected by Command

Mode 3: Site Identification

(a) Transponder Transmitter On

(b) Transponder Exciter Doppler Compensation Still Applied

(c) Identification Modulator and Associated 2.2688125 mc Crystal Oscillator On

(d) 2.2688125 mc Range Tone Loop Off

(e) Continuous Doppler Compensation Reference Signal Required

(f) 1.107 kc and 1.179 kc Range Tones Off

Mode 4: Operate

(a) Doppler Compensation Removed

(b) Identification Modulator and Associated 2.2688125 mc Crystal Oscillator Off

(c) 2.2688125 mc Range Tone Loop On

(d) 1.107 kc and 1.179 kc Range Tones On

2. Acquisition Philosophy

As previously noted, acquisition by sweeping the VCO frequency is not possible with the loop bandwidths used and with the short acquisition times desired. Therefore, separate methods have been devised to allow fast acquisition by presetting the VCO's in the frequency domain. This is accomplished by auxiliary wide-band phase-lock loops which can acquire and lock onto a reference frequency containing the Doppler offset information. The reference

frequency containing the Doppler offset information for presetting the Transponder Receiver VCO and the Transponder Transmitter VCO is obtained from the associated Site Command Receiver VCO. The Command Receiver must provide a clean coherent output signal at 12 $f_o \pm f_d$ for this purpose.

The Vehicle Tracking Receiver acquisition is accomplished in two steps. Initial acquisition is made possible by offsetting the Transponder Transmitter output frequency by an amount equal to the one-way Doppler shift. This operation causes the received signal at the Vehicle Tracking Receiver to arrive at exactly the nominal center frequency of the Vehcile Tracking Receiver so that the associated phase-lock loop can achieve lock-on quickly. However this operating state is only temporary since the Transponder Transmitter VCO and the Transponder Receiver VCO are offset on opposite sides of the nominal center frequency and the Transponder input and output frequencies are not coherent. In order to achieve coherence, it is necessary to change the Transponder Transmitter VCO frequency by an amount corresponding to twice the one-way Doppler shift. However, this change must be made quickly (0.5 seconds or less) and must be made in such a way that the sudden change in input frequency of ± 160 kc maximum at the Vehicle Tracking Receiver will not cause a permanent

loss of lock in the Vehicle Tracking Receiver. Therefore, the second step in Vehicle Tracking Receiver acquisition requires a reference signal with Doppler information at the Vehicle Tracking Receiver. Such a signal is available from the fine range tone VCO in the Vehicle Tracking Receiver.

3. Transponder Receiver Acquisition Circuitry

A block diagram with the essential features of the Transponder Receiver acquisition scheme is shown in Figure 14. The signal from the Command Receiver is divided by 2 and applied to the phase lock loop with the wide-band acquisition loop filter switched in. The VCO signal is applied to the AGC detector through the 90 degree phase shifter so that a DC control signal operates the Schmitt trigger as soon as the acquisition loop is locked to the command receiver VCO input signal. The Schmitt trigger switches the main loop filter on and the acquisition loop filter off, and simultaneously switches the Command Receiver VCO signal off and the Transponder Receiver last IF signal on. Since the VCO is at the correct frequency at the instant of switching, the main loop will lock and the Transponder Receiver Acquisition is completed.

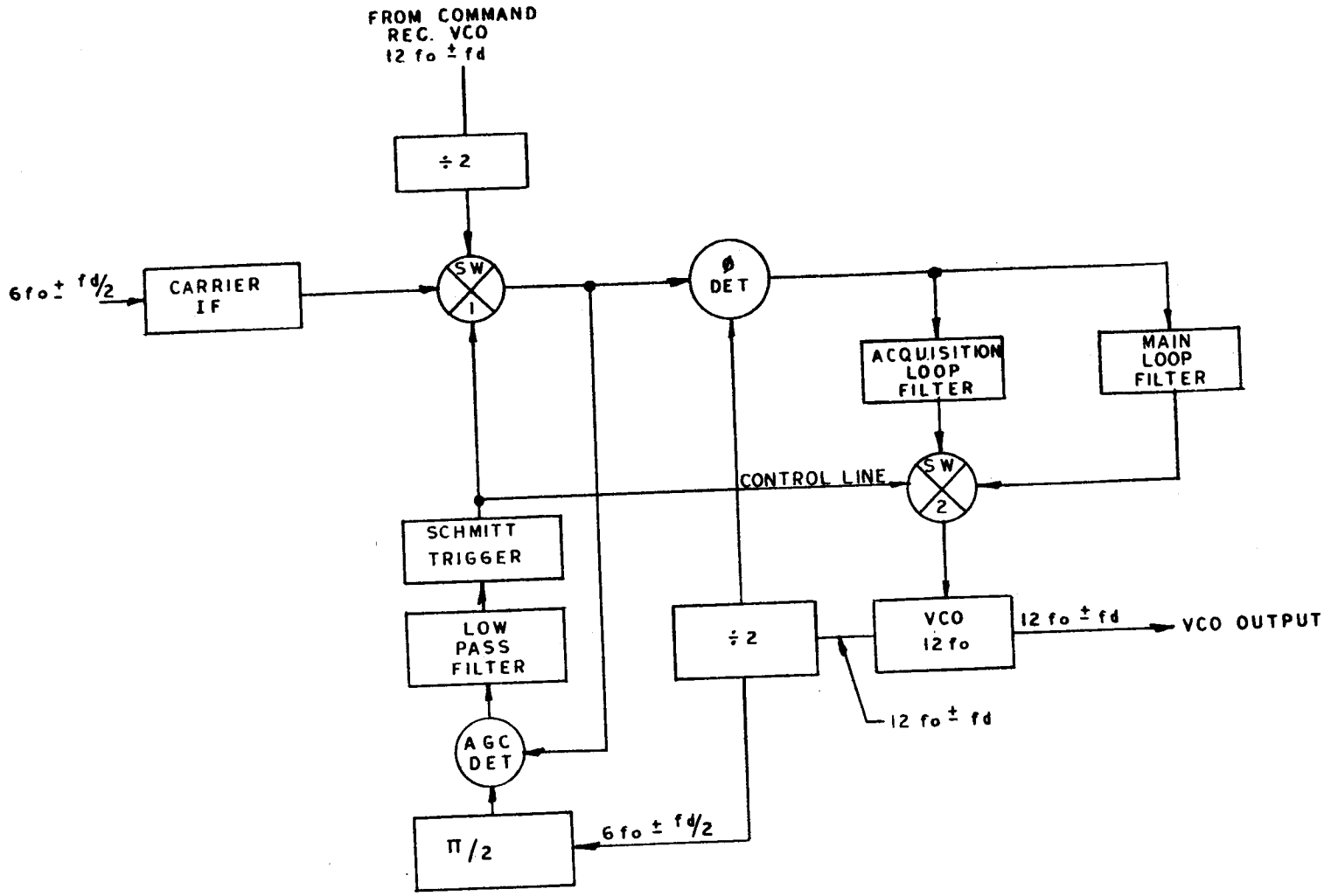

FIG 14
AROD TRANSPONDER RECEIVER
ACQUISITION SCHEME

4. Transponder Transmitter Acquisition Circuitry

A block diagram of the Transponder Transmitter Acquisition scheme is shown in Figure 15. The acquisition here is quite simple. Initial acquisition with the required reverse Doppler offset is obtained by feeding the Command Receiver VCO signal through the Doppler reverser to the tracking loop. An alternate approach which would increase acquisition time somewhat would be to use the Transponder Receiver VCO signal instead of the Command Receiver VCO signal.

After Vehicle Tracking Receiver lock verification is obtained, the Doppler reverser is switched out by a signal from the Site Command Logic and the input to the tracking loop is obtained directly from the Transponder Receiver VCO. As soon as this new acquisition is completed, the Transponder is operating in a coherent mode so that input and output frequencies are coherent.

5. Vehicle Tracking Receiver Acquisition

Although not a part of the AROD Transponder, the Vehicle Tracking Receiver acquisition scheme is directly related to the Transponder Transmitter acquisition and therefore will be

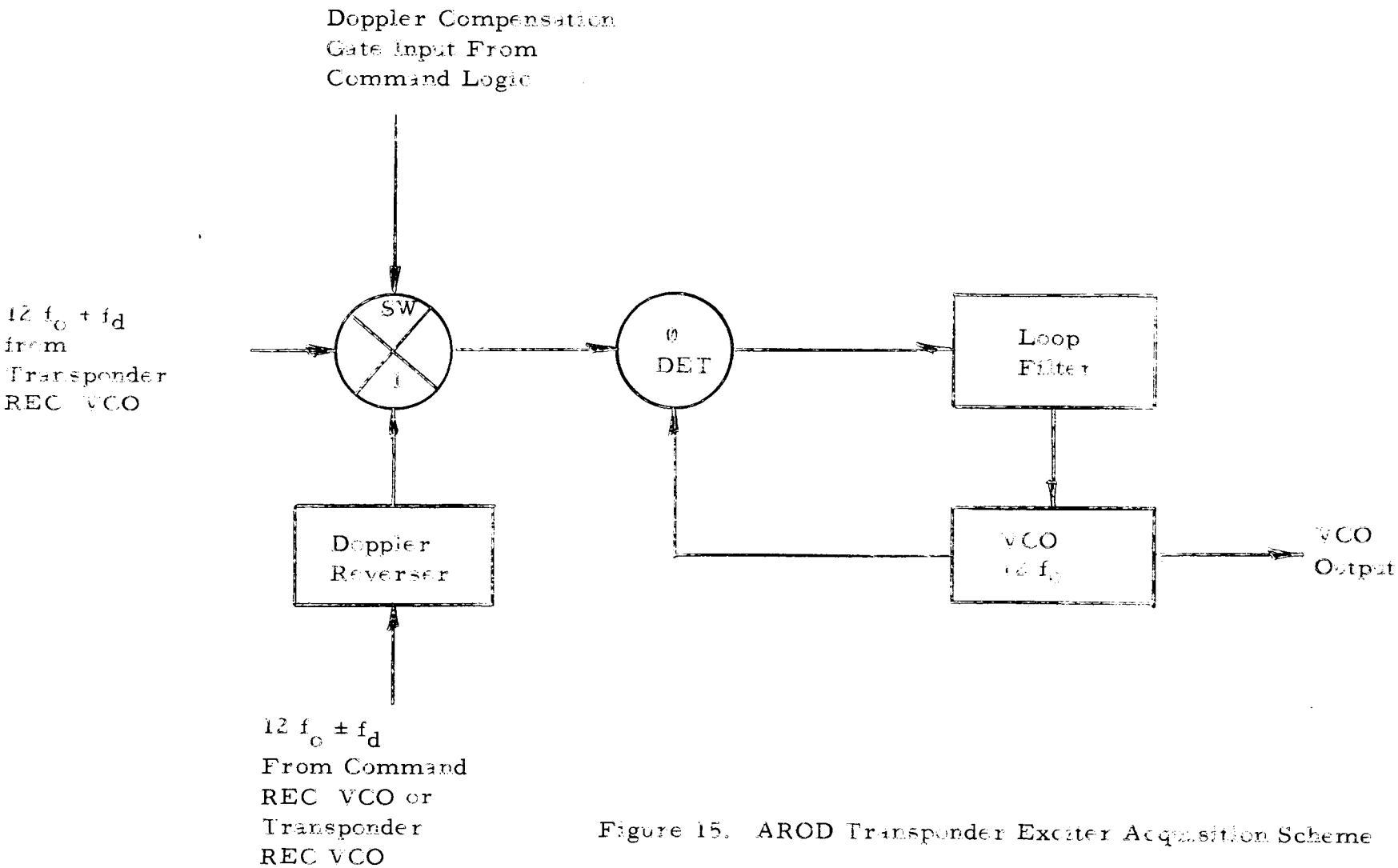

Figure 15. AROD Transponder Exciter Acquisition Scheme

discussed briefly. While the Vehicle Receiver is operating on the initial input frequency which has the reverse Doppler offset, the carrier arriving from the Transponder is not coherent with the Transponder Receiver carrier. However, it is interesting to note that the fine range tone frequency is coherent at the Vehicle Tracking Receiver regardless of whether the Transponder input and output carriers are coherent. Therefore, the Doppler information on the fine range tone VCO can be used to preset the Vehicle Tracking Receiver main loop VCO to the proper frequency to assure lock-in quickly after the Doppler compensation is removed from the Transponder Transmitter.