FACILITY FORM 602

N65-18119
(ACCESSION NUMBER)

106
(PAGES)

CR 57063
(NASA CR OR TMX OR AD NUMBER)

(THRU)

1
(CODE)

11
(CATEGORY)

HEC-D041
VOLUME V

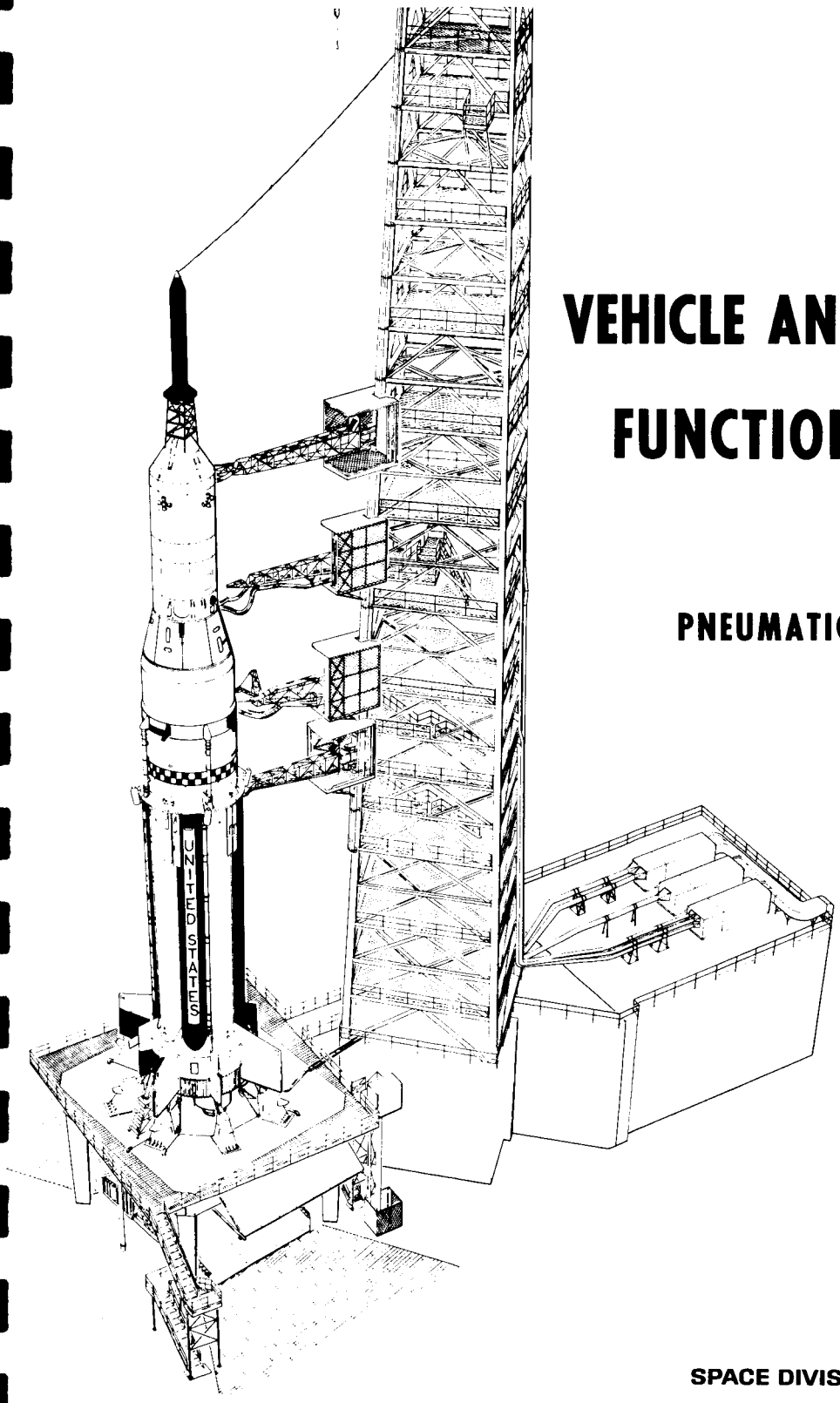

SA-7
VEHICLE AND LAUNCH COMPLEX
FUNCTIONAL DESCRIPTION

PNEUMATIC DISTRIBUTION SYSTEM

GPO PRICE $ _____

OTS PRICE(S) $ _____

Hard copy (HC) 4.00

Microfiche (MF) .75

SPACE DIVISION CHRYSLER CORPORATION

HUNTSVILLE OPERATIONS

HEC-DO41
VOLUME V

SA-7
VEHICLE AND LAUNCH COMPLEX
FUNCTIONAL DESCRIPTION

PNEUMATIC DISTRIBUTION SYSTEM

MAY 1964

ENGINEERING COMMUNICATIONS DEPARTMENT

SPACE DIVISION CHRYSLER CORPORATION

HUNTSVILLE OPERATIONS

58404/ZB015/250

FOREWORD

This volume has been prepared for the Functional Integration Section, Systems Integration and Operations Branch, Vehicle Systems Division, Propulsion and Vehicle Engineering Laboratory, by the Engineering Communications Department, Chrysler Corporation Space Division, under contract number NAS8-4016.

The following series, of which this volume is a part, functionally describes the mechanical and electromechanical systems of Saturn I, SA-7 space vehicle and Launch Complex 37:

Volume I.	RP-1 Fuel System
Volume II.	LOX System
Volume III.	LH_2 System
Volume IV.	Nitrogen and Helium Storage Facility
Volume V.	Pneumatic Distribution System
Volume VI.	Environmental Control System
Volume VII.	Launch Pad Accessories
Volume VIII.	H-1 Engine and Hydraulic System
Volume IX.	RL10A-3 Engine and Hydraulic System
Volume X.	Separation and Flight Termination Systems
Volume XI.	Supplement: Legend and Composite Schematic

Each volume contains mechanical schematics and a list of applicable finding numbers.

Volume V describes those components that are active during countdown, launch, and flight: it specifically excludes maintenance and checkout procedures. Only information available by March 10, 1964, has been included.

TABLE OF CONTENTS

	Page
1. PNEUMATIC DISTRIBUTION SYSTEM	1
2. PNEUMATIC CONTROL DISTRIBUTOR	1
2.1. GN_2 Section Operation	2
2.2. Helium Section Operation	4
3. VALVE PANEL 5	6
3.1. 3000-psig GN_2 System Operation	6
3.2. 750-psig GN_2 System Operation	7
3.3. Helium System Operation	8
4. VALVE PANEL 8	9
5. VALVE PANEL 9	10
5.1. GN_2 System Operation	10
5.2. Helium System Operation	11
6. VALVE PANEL 10	12
6.1. GN_2 Section Operation	12
6.2. Helium Section Operation	15
7. VALVE PANEL A	16
7.1. Ambient Helium Supply	16
7.2. 50-psig Helium Purge Supply System	17
7.3. Helium Transfer to the Helium Precool Heat Exchanger	18
7.4. Valve Panel A GN_2 Supply	18
8. HELIUM PRECOOL HEAT EXCHANGER	18
9. VALVE PANEL B	19
9.1. GN_2 Section Operation	19
9.2. Helium Section Operation	20
10. Q-BALL SYSTEM	20
10.1. Q-Ball	20
10.2. Q-Ball Cover and Removal System	21
10.3. Q-Ball Cover Removal	21
EQUIPMENT LOCATION DRAWING	23
LIST OF FINDING NUMBERS	25
MECHANICAL SCHEMATICS	97
DISTRIBUTION	111

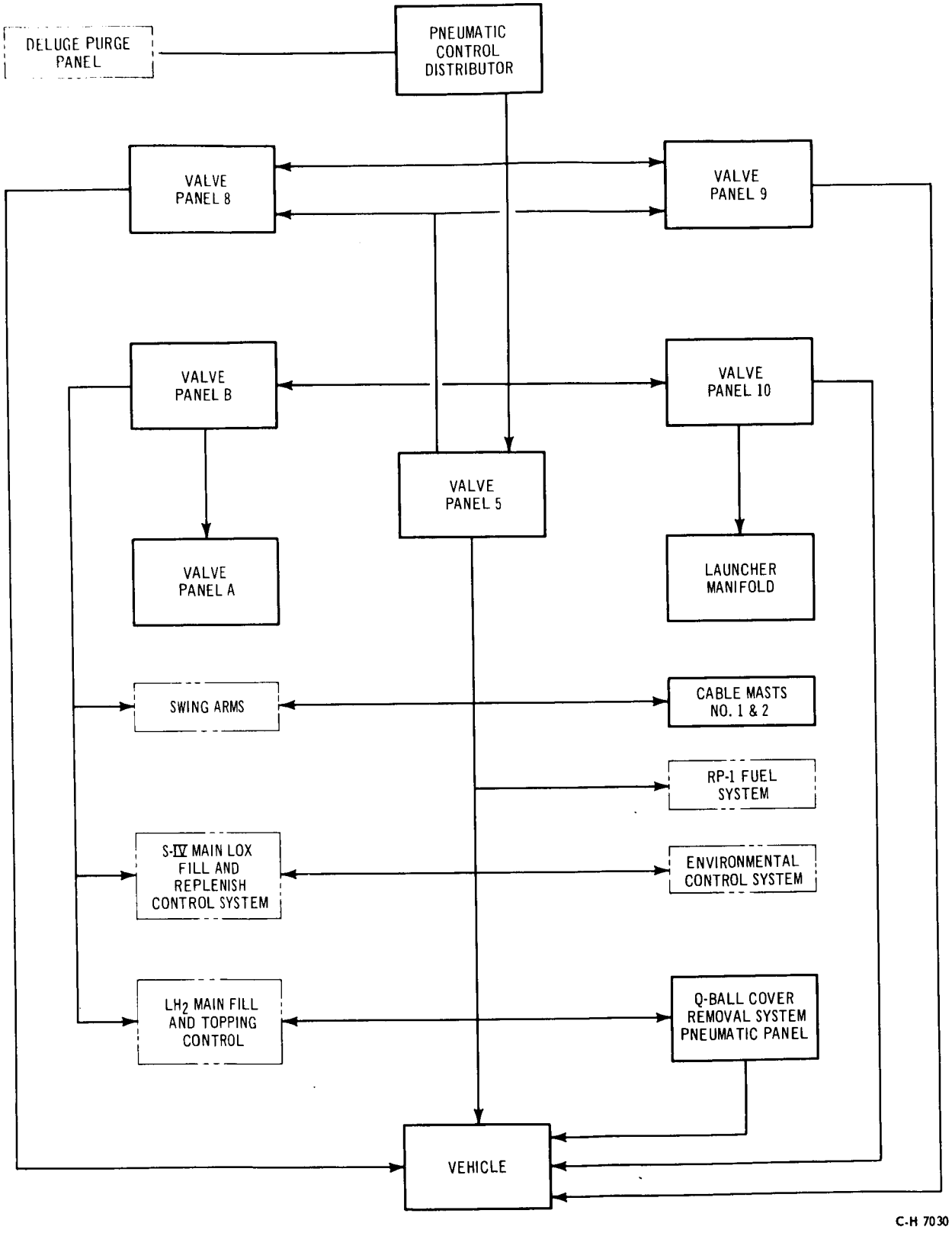

FIGURE 1. GN_2 DISTRIBUTION BLOCK DIAGRAM

1. PNEUMATIC DISTRIBUTION SYSTEM

The pneumatic distribution system at launch complex 37, pad B, receives 6000-psig gaseous nitrogen (GN_2) and helium from the nitrogen and helium storage facility. The pneumatic distribution system supplies the GN_2 (figure 1) and helium (figure 2) at various pressures to the ground and vehicle systems for control, pressurization, and purging operations. The major units in the pneumatic distribution system are the pneumatic control distributor (PCD); valve panels 5, 8, 9, 10, A, and B; a helium precool heat exchanger; and a Q-Ball cover removal system pneumatic panel. The Q-Ball, which is a back-up system to the accelerometer control system, is not part of the pneumatic distribution system, but is described in conjunction with the Q-Ball cover and removal system.

The PCD and valve panels 5 and 10 are located in the automatic ground control station (AGCS). Valve panels 8, 9, A, and B; the helium precool heat exchanger; and the Q-Ball cover removal pneumatic panel are located on the umbilical tower.

The mechanical schematics beginning on page 97 represent the ground and vehicle pneumatic distribution systems and should be used, in conjunction with the text, to follow the various flow routes of the system operation.

2. PNEUMATIC CONTROL DISTRIBUTOR

The PCD consists of a GN_2 section and a helium section. Inlet lines, shut-off valves, filters, primary regulators, and supply valves for each section are located in the basement of the AGCS, and the control panel for each section is located on the first floor of the AGCS. The GN_2 section includes three parallel systems: test and launch GN_2 system No. 1, launch GN_2 system No. 2, and launch GN_2 system No. 3. Each of these systems receives 6000-psig GN_2 from the storage facility, reduces it to 3000 psig, and supplies the 3000-psig GN_2 to a common manifold. Valve panels 5, 8, 9, 10, and the deluge purge panel receive 3000-psig GN_2 from the manifold. The helium section includes two systems: test and launch helium system No. 1 and launch helium system No. 2. The two helium systems also reduce 6000 psig to 3000 psig and supply the helium to a manifold. The helium manifold distributes 3000 psig to valve panels 5, 9, and 10. Both the GN_2 and helium sections contain pressure switches, pressure transducers, solenoid valves, and position indicators for monitoring and controlling PCD operation. The PCD also distributes 6000-psig GN_2 to valve panel B and 6000-psig helium to valve panel A. This high pressure gas is routed directly to the valve panels from the PCD inlet lines. The GN_2 is routed to valve panel B from launch GN_2 system No. 3, and the helium is routed to valve panel A from launch helium system No. 2. Although the PCD

output is maintained at 1500 psig for checkout and for part of countdown before being increased to 3000 psig at approximately T -50 minutes, only the 3000 psig operation is described.

2.1. GN_2 Section Operation (figure 4)

The three GN_2 systems receive 6000-psig GN_2 through separate supply lines from the nitrogen and helium storage facility. The GN_2 enters test and launch GN_2 system No. 1 and flows past 8000-psig Relief Valve A1451, through Manual Valve A1452 and 10-micron Filter A1453, to Primary Regulators A1457 and A1458; and through Manual Valve A1471 to reference Pressure Regulator A1467. Pressure Gage A1468 and Pressure Transducer A1469 provide local and remote monitoring respectively of regulator input pressure for GN_2 systems 1, 2, and 3. Reference Pressure Regulator A1467 reduces the GN_2 pressure to 3000 psig and the GN_2 flows past regulator output Pressure Gage A1464, through Solenoid Valve A1463, and Orifice A1461 to dome-load Primary Regulators A1457 and A1458. Orifice A1461 prevents pressure surges into the primary regulator domes and Relief Valve A1456 provides dome overpressure protection. The primary regulators reduce the 6000 psig input pressure to 3000 psig and supply the GN_2 through Manual Valve A1459 to 3000-psig GN_2 Distributor Manifold A1577.

GN_2 at 6000 psig enters launch GN_2 systems No. 2 and 3 and flows past 8000-psig Relief Valves A1475 and A1496; through Manual Valves A1476 and A1497, and 10-micron Filters A1477 and A1498; to Manual Valves A1492 and A1500, and to Primary Regulators A1481, A1482, A1505, and A1506. GN_2 enters manually adjusted reference Pressure Regulator A1491 through Manual Valves A1492 and A1500. The reference pressure regulator reduces the 6000-psig GN_2 input pressure to 3000 psig. The GN_2 flows from reference Pressure Regulator A1491 past regulator output Pressure Gage A1488, through Solenoid Valve A1487 and through Orifice A1485; dome-loading Primary Regulators A1481, A1482, A1505, and A1506. The primary regulators reduce the 6000 psig input pressure to 3000 psig and supply the pressure through Manual Valves A1483 and A1507 to 3000-psig GN_2 Distributor Manifold A1577. Relief Valves A1480 and A1504 provide dome overpressure protection. GN_2 from 3000-psig GN_2 distributor Manifold A1577 flows through Shuttle Valve A1581 to Pressure Gage A1525 for local monitoring and to Pressure Transducer A1524 for remote monitoring. 3500-psig Relief Valves A1526 and A1527 provide overpressure protection for the manifold.

Valve panels 5, 8, 9, 10, and the deluge purge panel receive 3000-psig GN_2 through a series of supply lines from 3000-psig GN_2 Distributor Manifold A1577. Each supply line contains a manual shut-off valve, pressure switch, manual vent valve, and a vent line check valve. Components used in each supply line are listed in the table on page 4.

GN_2 at 6000 psig is supplied to valve panel B by launch GN_2 system No. 3. From the outlet side of Filter A1498, GN_2 flows through a supply line from the AGCS, up the umbilical tower to valve panel B.

Test and launch GN_2 system No. 1 and launch GN_2 systems No. 2 and 3 inlet pressure can be vented through Manual Vent Valves A1473, A1494, and A1501 and Check Valves A1586, A1585, and A1508 to 6000-psig Vent Manifold A1509. The

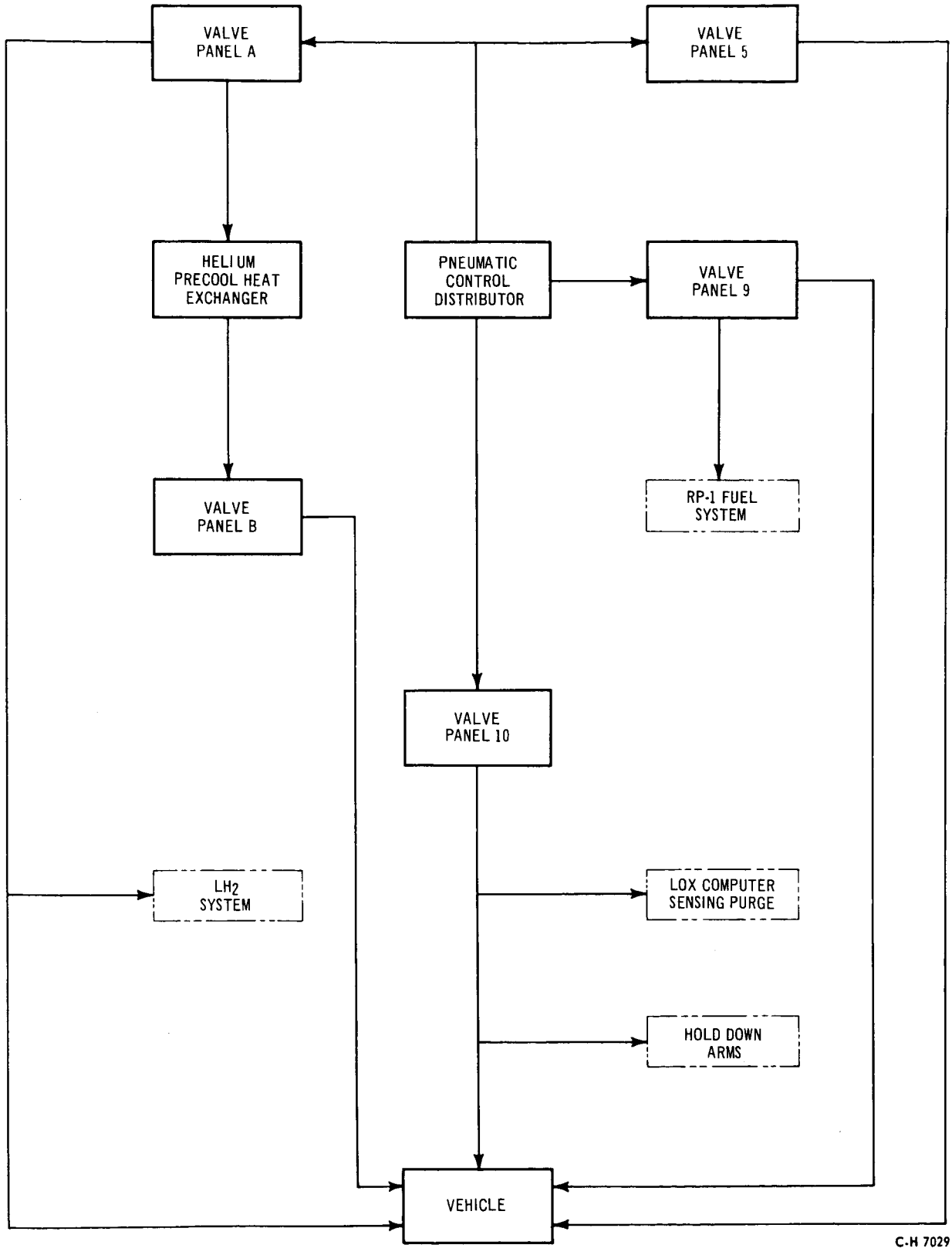

FIGURE 2. HELIUM DISTRIBUTION BLOCK DIAGRAM

Supply line	Components			
	Shut-off Valve	Pressure Switch	Vent Valve	Check Valve
Valve Panel 5	A1534	A1543	A1561	A1570
Valve Panel 8	A1530	A1539	A1557	A1566
Valve Panel 9	A1537	A1546	A1564	A1573
Valve Panel 10	A1536 A1535	A1545 A1544	A1563 A1562	A1572 A1571
Deluge Purge Panel	A1533 A1532	A1542 A1541	A1560 A1559	A1569 A1568

vented GN_2 flows out of the manifold to the atmosphere through Silencer A1514. The primary regulator domes can be vented through Manual Vent Valves A1466 and A1490 and Check Valves A1465 and A1489 to 3000-psig GN_2 Vent Manifold A1580. 3000-psig GN_2 Distributor Manifold A1577 can be vented through Manual Vent Valve A1529 and Check Valve A1528 to Manifold A1580.

Solenoid Valves A1463 and A1487 are energized to the closed (vent) position if an emergency arises, allowing the primary regulator domes to vent back through the solenoid valves and Silencers A1462 and A1486 to atmosphere. The primary regulators will then close, shutting off the 3000-psig GN_2 supply from the PCD.

2.2. Helium Section Operation (figure 4)

The helium section of the PCD receives 6000-psig helium through two lines from the nitrogen and helium storage facility. Helium enters test and launch helium system No. 1 and launch helium system No. 2 and flows past 8000-psig Relief Valves A1699 and A1610, through Manual Valves A1587 and A1611, and 10-micron Filters A1588 and A1612, to Primary Regulators A1592, A1593, A1616, and A1617; and through Manual Valves A1606 and A1627 to reference Pressure Regulators A1602 and A1626. Regulator input pressure is monitored locally by Pressure Gage A1603 and remotely by Pressure Transducer A1604. Reference Pressure Regulators A1602 and A1626 reduce the 6000-psig helium to 3000 psig. The 3000 psig helium then flows past regulator output Pressure Gages A1599 and A1623, through Solenoid Valves A1598 and A1622 and Orifices A1596 and A1620, to dome-load Primary Regulators A1592, A1593, A1616, and A1617. The primary regulators open and the helium passes through; its pressure reduced from 6000 psig to 3000 psig. Helium flows from the primary regulators through Manual Valves A1594 and A1618 to 3000-psig Helium Distributor Manifold A1635. Orifices A1596 and A1620 eliminate pressure surges to the primary regulator domes, and Relief Valves A1591 and A1615 provide dome overpressure protection. Helium from 3000-psig Helium Distributor Manifold A1635 flows through Shuttle Valve A5403 to

Pressure Gage A1641 for local monitoring, and to Pressure Transducer A1640 for remote monitoring. 3500-psig Relief Valves A1642 and A1643 provide overpressure protection for Manifold A1635.

Valve panels 5, 9, and 10 receive 3000-psig helium through a series of supply lines from 3000-psig Helium Distributor Manifold A1635. Each supply line contains a manual shut-off valve, a pressure switch, a manual vent valve, and a vent line check valve. Components used in each supply line are listed below.

Supply line	Components			
	Shut-off Valve	Pressure Switch	Vent Valve	Check Valve
Valve Panel 5	A1647	A1656	A1674	A1683
Valve Panel 9	A1646	A1655	A1673	A1682
Valve Panel 10	A1651 A1650	A1660 A1659	A1678 A1677	A1687 A1686

Helium at 6000 psig is supplied to valve panel A by launch helium system No. 2. From the outlet side of Filter A1612, helium flows through a supply line from the AGCS to valve panel A on the umbilical tower.

Test and launch helium system No. 1 and launch helium system No. 2 inlet pressure can be vented through Manual Vent Valves A1608 and A1629 and Check Valves A5407 and A5406 to 6000-psig Vent Manifold A1509. Primary regulator domes are vented through Manual Vent Valves A1600 and A1624 and Check Valves A1601 and A1625 to 3000-psig Helium Vent Manifold A1697. The 3000-psig helium distributor manifold can be vented through Manual Vent Valve A1645 and Check Valve A1644 to 3000-psig Helium Vent Manifold A1697.

Solenoid Valves A1598 and A1622 are energized to the closed (vent) position if an emergency arises, allowing the primary regulator domes to vent back through the solenoid valves and Silencers A1597 and A1621 to atmosphere. The primary regulators will then close, stopping 3000-psig helium flow from the PCD.

3000-psig Helium Distributor Manifold A1635 receives GN_2 from 3000-psig GN_2 Distributor Manifold A1577 for checkout purposes to conserve helium for launch operations. Manual Valves A1584 and A1694 admit the GN_2 to the helium distributor manifold. The interconnect line can be vented to atmosphere through Manual Vent Valve A6058 and Check Valve A6059.

3. VALVE PANEL 5

Valve panel 5, located on the first floor of the AGCS, receives 3000-psig GN_2 and helium from the nearby PCD control panels. The valve panel supplies GN_2 at 3000, 750, 50, and 25 psig; and helium at 3000 psig. The GN_2 system contains a 3000-psig GN_2 manifold that distributes GN_2 directly to the swing arm accumulators and the air bearing system and through a regulator to the tower purge and launcher purge systems. A 750-psig manifold in the GN_2 system supplies GN_2 for umbilical release, for fuel booster line valve control, and to the tower manifold supply line; and through a regulator to the fuel adjust level regulator supply system. The helium system supplies 3000-psig helium to the vehicle S-I stage for the propellant slosh measurement system.

3.1. 3000-psig GN_2 System Operation (figure 5)

GN_2 at 3000 psig enters valve panel 5 through 5-micron Filter A2052 and flows past inlet Pressure Gage A2053 to 3000-psig GN_2 Manifold A2054.

3.1.1. Tower Purge System Operation. GN_2 enters the tower purge system through Manual Valve A2055 and flows to reference Pressure Regulator A2056 and to Primary Regulator A2057. Reference Pressure Regulator reduces 3000 psig to 50 psig and dome-loads Primary Regulator A2057. 70-psig Relief Valve A2157 provides overpressure protection for the primary regulator dome. GN_2 at 50 psig from Primary Regulator A2057 flows past Manual Vent Valve A2063 and 60-psig Relief Valve A2058 to the umbilical tower for purging electrical panels and components, thus minimizing fire hazards. The environmental control system also receives 50-psig GN_2 from the tower purge system for pneumatic valve actuation (described in Volume VI). The tower purge system pressure is monitored by Pressure Gage A2059 and Pressure Switch A2061. Shuttle Valve A2060, used to calibrate the pressure gage and the pressure switch, is capped during operation. Internal relief pressure from Primary Regulator A2057 vents to atmosphere through Check Valve A2165.

3.1.2. Launcher Purge System Operation. GN_2 enters the launcher purge system through Manual Valve A2119 and flows to reference Pressure Regulator A2120 and Primary Regulator A2121. Reference Pressure Regulator A2120 reduces 3000 psig to 50 psig and dome-loads Primary Regulator A2121. 70-psig Relief Valve A2158 provides overpressure protection for the primary regulator dome. GN_2 at 50 psig from Primary Regulator A2121 flows past Manual Vent Valve A2127 and 60-psig Relief Valve A2122 to the launcher for purging electrical panels and the housings on short cable masts No. 2 and 4. GN_2 reduced from 50 psig to a slightly positive pressure by Orifices A6506 and A6606 in the housings on cable masts No. 2 and 4 provides an inert atmosphere and prevents contaminants from entering the housings (Volume VII). The launcher purge system pressure is monitored by Pressure Switch A2125 and Pressure Gage A2123. Shuttle Valve A2124, used to calibrate the pressure switch and pressure gage, is capped during operation. Internal relief pressure from Primary Regulator A2121 vents to atmosphere through Check Valve A2134.

3.1.3. Swing Arm Accumulator Supply. GN_2 at 3000 psig from GN_2 Manifold A2054 flows through Manual Valve A2066 past Manual Vent Valve A2067 to the accumulators of swing arms No. 1, 2, and 3 (described in Volume VII).

3.1.4. Air Bearing GN_2 Supply System. GN_2 enters the air bearing GN_2 supply system through Manual Valve A2077 and flows through Check Valve A2079 to a desiccant panel mounted on the AGCS wall behind valve panel 5. GN_2 flows through 10-micron Filter A2080, and Purifiers A2103, A2102, and A2081 in the desiccant panel. The filter and purifiers remove oil, water, and other foreign matter from the GN_2. The GN_2 re-enters valve panel 5 through 3-micron Filter A2071 and flows through Orifice A2082 to Solenoid Valve A2083 and Manual Bypass Valve A2084. Normal GN_2 flow is through Solenoid Valve A2083; however, if the solenoid malfunctions, the manual bypass valve is opened. GN_2 flow continues past Manual Vent Valve A2087 and Test Valve A2085 to the elapsed time meter Pressure Switch A2075, which starts Elapsed Time Meter A2076 to record pressurized time of the air bearing GN_2 supply system. GN_2 flows over swing arm No. 3 (figure 8) past constant bleed Orifice A3259 and Check Valve A3258 and enters the vehicle through Couplings A3248 and G500. From the couplings, GN_2 flows through Filter G501, Check Valve G502, and pressurizes high pressure Sphere G503 to 3000 psig.

The air bearing system receives 3000-psig GN_2 from high pressure Sphere G503. GN_2 flows past Pressure Switches G505 and G506, through Regulator-Heater Assembly G507, where it is reduced in pressure and heated if necessary, through Manifold Assembly G508 containing Thermostat G509, and through Filter G510 to the gyros in Stabilized Platform ST 124. Regulator-Heater Assembly G507 also contains a filter, a solenoid valve, and a solenoid bypass orifice. Pressure Switch G505 provides a sphere pressure OK signal and Pressure Switch G506 shuts down Stabilized Platform ST 124 and closes the solenoid valve in Regulator-Heater Assembly G507 if system pressure decreases below 1300 psig during standby operation. GN_2 flows through the solenoid bypass orifice at a reduced pressure to allow safe bearing runout as gyro speed decays. GN_2 to Stabilized Platform ST 124 is maintained at a temperature of 25° ±1°C by Thermostat G509 and the heater in Regulator-Heater Assembly G507.

3.2. 750-psig GN_2 System Operation (figure 5)

GN_2 supplied by 3000-psig GN_2 Manifold A2054 flows to reference Pressure Regulator A2090 and Primary Regulator A2091. Reference Pressure Regulator A2090 reduces the GN_2 pressure to 750 psig and dome-loads Primary Regulator A2091. The primary regulator also reduces the input pressure to 750 psig and supplies this pressure to 750-psig GN_2 Manifold A2092. GN_2 from the Manifold flows through Shuttle Valve A2095 to Pressure Gage A2094 for local monitoring and to Pressure Switch A2096 for remote monitoring. Relief Valve A2093 provides overpressure protection for Manifold A2092 and Manual Vent Valve A2098 vents the manifold to atmosphere through Check Valve A2099.

3.2.1. Adjust Level Regulator Supply System. GN_2 from 750-psig GN_2 Manifold A2092 enters the adjust level regulator supply system through Manual Valve A2108 and flows to manually adjusted Pressure Regulator A2109, which reduces the pressure to 25 psig. GN_2 flow continues past Relief Valve A2110 and Manual

Vent Valve A2115 to the RP-1 fuel system, through Pressure Controller A559, to operate Adjust Level Regulator A522 (described in Volume I). The adjust level regulator supply pressure is monitored locally by Pressure Gage A2111 and remotely by signals from Pressure Switch A2113. The 25-psig GN_2 pressure is also supplied to the LOX replenish system for valve control (described in Volume II).

3.2.2. Tower Manifold Supply System. GN_2 from 750-psig GN_2 Manifold A2092 flows through Manual Valve A2162, past Pressure Gage A2161, and Manual Vent Valve A2163 into the tower manifold supply line. Connections can be made to the tower manifold supply line at each level on the umbilical tower to provide an additional 750-psig GN_2 source as needed. The tower manifold supply line supplies 750 psig to the engine compartment conditioning system for valve actuation (described in Volume VI).

3.2.3. Umbilical Release Supply System. GN_2 from 750-psig GN_2 Manifold A2092 flows through Manual Valve A2130 and past Manual Vent Valve A2131 to swing arms No. 1, 2, and 3 (Volume VII). The umbilical release supply system also supplies 750-psig GN_2 to the LOX and LH_2 systems for valve actuation (described in Volumes II and III), and to the Q-Ball cover removal system pneumatic panel (described in paragraph 10.3).

3.2.4. Fuel Booster Line Valve Control System. The fuel booster line valve opening and closing pressure is controlled by two solenoid valves that are electrically controlled from the blockhouse and operate simultaneously. With the solenoid valves de-energized, GN_2 from 750-psig GN_2 Manifold A2092 flows through Solenoid Valve A2135 to the closing port of Fuel Booster Line Valve A519. The opening port vents to atmosphere through Solenoid Valve A2138, Manual Vent Valve A2139, and Check Valve A2140. When the solenoid valves are energized, Solenoid Valve A2135 closes to input pressure and vents the closing port pressure to atmosphere through Check Valve A2136, and Solenoid Valve A2138 opens to supply 750 psig pressure to the opening port of the fuel booster line valve (Volume I). Manual Valve A2139 can be closed to prevent fuel booster Line Valve A519 from closing when Solenoid Valve A2138 is de-energized. Or, Manual Valve A2139 can be adjusted to effect slow closing of the fuel booster line valve.

3.3. Helium System Operation (figure 5)

Valve panel 5 helium system receives 3000-psig helium from the PCD. Helium enters the valve panel through 5-micron Filter A2144 and flows past inlet Pressure Gage A2145 to Solenoid Valve A2146 and Manual Bypass Valve A2147. Normal helium flow is through Solenoid Valve A2146. Manual Bypass Valve A2147 is used for test purposes and for emergency operation if Solenoid Valve A2146 should fail. Helium flows past Manual Vent Valve A2150 and into the S-I stage through Couplings A3048 and B400 (figure 9). From Coupling-Half B400, 3000-psig helium flows through 20-micron Filter B401 and Check Valve B402 to the pre-flight and flight slosh probe purge systems, and also through Check Valve B421 to Helium Bottle B405. Pressure Switch B403 provides a remote indication when the helium bottle is pressurized to 3000 psig. Manual Valve B404, used when calibrating Pressure Switch B403, is capped during operation.

3.3.1. Pre-flight Slosh Probe Purge System Operation. Helium at 3000 psig from Check Valve B402 flows through Solenoid Valves B408 and B415 and through Orifices B420 that reduce the flow rate to 30 scfh and the pressure to approximately 850 psig. Helium then enters Fuel Containers F-4 and LOX Containers O-C and O-2 slosh probes through 12 Orifices B416, which meter the flow and further reduce the pressure to 450 psig.

3.3.2. Flight Slosh Probe Purge System Operation. Helium at 3000 psig from Helium Bottle B405 flows into Pressure Regulators B406 and B417 and is reduced to 450 psig. Helium from the regulators flows past constant bleed Orifices B418, through Check Valves B419 and Orifices B416, to the slosh probes in Fuel Container F-4 and LOX Containers O-C and O-2.

3.3.3. Slosh Probe Operations. During flight, slosh in Fuel Container F-4 and LOX Containers O-C and O-2 is measured by Differential Pressure Transducers B413, B414, B411, B412, B409, and B410. The two differential pressure transducers mounted on each container measure the pressure differential caused by wave movement (upward on one probe and downward on the other) across diametrically opposite pairs of probes. The measurement is telemetered to the LCC.

4. VALVE PANEL 8

Valve panel 8, located on the umbilical tower at the 168-foot level, receives 3000-psig GN_2 from the PCD and 50-psig GN_2 through the tower purge line from valve panel 5 (figure 5). Valve panel 8 supplies and controls the 750-psig actuation pressure to the LN_2 ground supply valve and the LN_2 fill and vent valve (described in Volume VI). The valve panel is operated remotely after the 3000-psig manual supply valve is opened and the 750-psig reference pressure regulator has been adjusted.

GN_2 at 3000 psig enters valve panel 8 through Manual Supply Valve A3801 and flows through 5-micron Filter A3802, past Inlet Pressure Gage A3804, and Manual Vent Valve A3805 to reference Pressure Regulator A3812 and Primary Regulator A3813. Reference Pressure Regulator A3812 dome-loads Primary Regulator A3813 with 750 psig. Primary Regulator A3813 reduces the GN_2 to 750 psig and supplies it to Solenoid Valves A3815, A3816, A3817, and A3818. Primary regulator output pressure is monitored by Pressure Gage A3820. Relief Valve A3814 provides overpressure protection for the system and relieves to atmosphere through Silencers A3826 and A3827. The 750-psig system pressure can be vented to atmosphere through Manual Vent Valve A3819.

To reduce fire hazards, valve panel 8 receives a constant cabinet purge (50-psig GN_2) from the tower purge system. GN_2, reduced from 50 psig to a slightly positive pressure by Orifice A3844, purges and 'inerts' the cabinet atmosphere. Calibrated Bleed A3845 helps maintain the positive pressure in the cabinet by restricting the GN_2 flow to atmosphere.

5. VALVE PANEL 9

Valve panel 9, located on the 108-foot level of the umbilical tower, contains a GN_2 system and a helium system supplied with 3000-psig GN_2 and helium from the PCD control panels in the AGCS and 50-psig GN_2 from the tower purge system. The GN_2 system supplies 3000 psig to the fuel containers pressurization spheres in the S-I stage, 750 psig control pressure to the S-I stage fuel vent valves, and 750 psig to the LOX system for valve control. The helium system regulates and supplies helium pressure to purge the RP-1 fuel system computer sensing lines. Solenoid valves in valve panel 9 provide remote operation capabilities from the blockhouse. The manual operations required by valve panel 9 are: initial adjustment of the pressure regulators; opening the manual supply valves; and when operations have been completed, manually venting the systems.

To reduce fire hazards, valve panel 9 receives a constant cabinet purge from the tower purge system. GN_2, reduced from 50 psig to a slightly positive pressure by Orifice A5078, purges and 'inerts' the cabinet atmosphere. Calibrated Bleed A5079 helps maintain the positive pressure in the cabinet by restricting the GN_2 flow to atmosphere.

5.1. GN_2 System Operation (figure 5)

GN_2 at 3000 psig enters valve panel 9 and flows through Manual Valve A5001, through 5-micron Filter A5002, and past inlet Pressure Gage A5004. Flow continues past Manual Vent Valve A5005 to Solenoid Valve A5010 in the fuel containers pressurization spheres supply line and to Pressure Regulators A5019 and A5018 in the 750-psig supply line to the fuel container vent valves.

5.1.1. Fuel Containers Pressurization Sphere Supply. Valve panel 9 begins supplying 1500-psig GN_2 to the fuel containers pressurization spheres at T -1 day. The pressure, maintained at 1500 psig until approximately T -50 minutes, is then increased to 3000 psig by the PCD (described in paragraph 2). Only the 3000 psig operation is described. GN_2 at 3000 psig from Solenoid Valve A5010, or Manual Bypass Valve A5008 if the solenoid valve has failed, flows past Test Vent Valve A5006, Manual Vent Valve A5007, and Solenoid Vent Valve A5009, through Orifice A3052, and enters the S-I stage through Couplings A3063 and B250 (figure 9). From Coupling-Half B250, GN_2 flows through Filter B251 and Check Valve B252, to Fuel Containers Pressurization Spheres B253. Pressure Switch B258 receives pressure through Manual Valve B257 and actuates at 2800 psig providing a sphere pressure OK signal to the LCC. This signal is one of the prerequisites for S-I stage engine ignition.

GN_2 from Filter B251 also flows through Check Valve B231 and pressurizes LOX-SOX vaporization triplex Spheres B198, B199, and B232 to 3000 psig.

Camera Capsule Ejection Sphere B227 is pressurized at approximately T -15 minutes from the fuel tank pressurization sphere supply line through Orifice B224, Solenoid Valve B223, and Vent Solenoid Valve B226.

The LOX-SOX vaporization system is supplied 3000-psig GN_2 from four triplex Spheres B198, B199, and B232. The spheres are isolated by Solenoid Valves B233 and B234 until 70 seconds of flight have elapsed. Actuation of the solenoid valves permits pressure equalization among triplex Spheres B198, B199, and B232; fuel containers pressurization Spheres B253; and Manifold B235. Residual GN_2 in the fuel container pressurization system provides an additional GN_2 source for the LOX-SOX vaporization system. When LOX-SOX vaporization begins, Solenoid Valves B236, B237, B238, B239, B240, B241, and B242 open to supply GN_2 from Manifold B235 to Plenum Chamber B243. To reduce S-IV stage fire hazards, the plenum chamber supplies GN_2 through six disposal manifolds into the S-IV boattail, thus vaporizing the SOX and LOX and diluting the GOX present in the six RL10A-3 engine nozzles during chilldown. The varying GN_2 flowrate (into the S-IV boattail) requirements are met by the flight sequencer (described in Volume X), which controls the opening of the required number of solenoid valves (B236 through B242).

Camera capsule ejection occurs 25 seconds after separation of the S-I and S-IV stages. Solenoid Valve B228 opens and 3000-psig GN_2 from Camera Capsule Ejection Sphere B227 flows into Manifold B229. Pressure from the manifold is supplied to a piston in each camera capsule ejection device. The piston movement shears a safety pin and each device ejects its camera capsule. A constant bleed through Orifice B230 prevents inadvertent camera capsule ejection if leakage develops through Solenoid Valve B228.

5.1.2. 750-psig Control Pressure Supply Operation (figure 5). GN_2 at 3000 psig flows to reference Pressure Regulator A5019 and Primary Regulator A5018. Reference Pressure Regulator A5019 reduces the input pressure to 750 psig and dome-loads Primary Regulator A5018. Primary Regulator A5018 then reduces its input pressure to 750 psig and supplies this pressure past 850-psig Relief Valve A5020, regulator output Pressure Gage A5021, and Manual Vent Valve A5022 to Solenoid Valve A5023. When energized, Solenoid Valve A5023 supplies 750-psig GN_2 through Couplings A3062 and B117 to open Fuel Vent Valves B106 in the S-I stage (described in Volume I).

The 750-psig GN_2 control pressure is also supplied to the S-IV main LOX fill and replenish control system for valve actuation (described in Volume II).

5.2. Helium System Operation (figure 5)

Helium at 3000 psig enters valve panel 9 and flows through Manual Valve A5046, past inlet Pressure Gage A5047, and through Filter A5048 to Pressure Regulator A5050. The pressure regulator reduces the input pressure to 450 psig and supplies this pressure past Relief Valve A5073 to the high and low pressure fuel sensing lines purge system. During fuel tanking operations, helium purges the sensing lines in fuel container F-4, and prevents fuel from rising into the lines as the containers are filled.

5.2.1. Fuel Density and Tanking Computer Sensor Purge. Orifice A5061 reduces the 450 psig input pressure to 150 psig. Helium at 150 psig flows past Pressure Switch A5063 to a second Orifice A5064, further reducing the pressure to approximately 16 psig. Helium then flows through Solenoid Valve A5066 to

Density Computer A507 and Fuel Tanking Computer A506 (Volume I). From Orifice A5064 helium flows through Couplings A3049 and B114 to purge the fuel density and tanking sensor in fuel container F-4.

5.2.2. Fuel Density Sensor Purge. Orifice A5053 reduces 450 psig to 150 psig. The 150-psig helium flows past Pressure Switch A5055 to a second Orifice A5056 that further reduces the pressure to approximately 16 psig. Helium flows through Solenoid Valve A5058 to Density Computer A507. From Orifice A5056 helium flows through Couplings A3051 and B116 to purge the density sensor in Fuel Container F-4.

5.2.3. Fuel Tanking Computer Low Pressure System. The low pressure sensing line from Fuel Tanking Computer A506 is routed through valve panel 9. Solenoid Valve A5070, located in the line for control purposes, is actuated from a remote panel. Valve panel 9 does not supply a purge pressure to this sensing line.

6. VALVE PANEL 10

Valve panel 10, located on the first floor of the AGCS, consists of GN_2 and helium sections that receive 3000 psig supply pressure from the PCD. Each section reduces this pressure to the operational requirements and effects distribution to various ground and vehicle systems.

6.1. GN_2 Section Operation (figure 6)

The GN_2 section distributes the GN_2 to various purge and bubbling systems, pneumatic control equipment, and the 750-psig GN_2 launcher manifold. GN_2 at 3000 psig from the PCD flows into valve panel 10 through 5-micron filters A5152 and A5153 and pressurizes 3000-psig GN_2 Manifold A5157. Pressure Gage A5156 is used to monitor input pressure.

6.1.1. LOX Dome Trickle Purge and LOX Dome Purge. The LOX dome trickle purge is initiated when the thrust chamber covers are removed from the H-1 engines and continues until just prior to engine ignition. GN_2 at 3000 psig from Manifold A5157 flows to reference Pressure Regulator A5220 and to Primary Regulators A5223 and A5232. Reference Pressure Regulator A5220 reduces the GN_2 pressure to 240 psig, which is monitored by Pressure Gage A5229 and dome-loads Primary Regulator A5232. Solenoid Valve A5222 prevents GN_2 flow to Primary Regulator A5223 during LOX dome trickle purge operation. Primary Regulator A5232 reduces GN_2 pressure to 165 psig, which is monitored by Pressure Gage A5233. This 165 psig GN_2 flows through Solenoid Valve A5234, past Relief Valve A5224 and Pressure Switch A5227, and through Couplings A6502 and B304, and A6504 and B304, to the LOX domes of the H-1 engines (described in Volume VIII). Manual Valve A5287 bypasses Solenoid Valve A5234 for manual operation of the LOX dome trickle purge. Shuttle Valve A5226, used to calibrate Pressure Switch A5227, is capped during purge operations.

At T -25 seconds, the LOX dome high-flow-rate purge is initiated by energizing Solenoid Valve A5222. GN_2 from reference Pressure Regulator A5220 flows through Orifice A5221 to dome-load Primary Regulator A5223, which reduces 3000 psig to 240 psig. The 240-psig GN_2 flows to the H-1 engine LOX domes through the same path described in the preceding paragraphs, but at a greater flowrate because of larger plumbing used in the LOX dome high-flow-rate purge supply system. The purge continues until LOX pump outlet pressure overcomes the purge pressure and closes Check Valve B45 (Volume VIII).

6.1.2. Thrust Chamber Fuel Injector Purge System Supply. GN_2 at 3000 psig flows from Manifold A5157 through two separate lines to reference Pressure Regulator A5196 and Primary Regulator A5199. Reference Pressure Regulator A5196 reduces the pressure to 490 psig. Just prior to launch, Solenoid Valve A5198 is energized and 490-psig GN_2 flows past Pressure Gage A5205, through Solenoid Valve A5198, through Orifice A5197; and dome-loads Primary Regulator A5199, which opens and reduces the supply pressure to 490 psig. The 490-psig GN_2 from the primary regulator flows past Relief Valve A5200 and Pressure Switch A5203 to the S-I stage through Couplings A6503 and B303. From Coupling-Half B303, GN_2 flows to the H-1 engine to purge the thrust chamber fuel injector (described in Volume VIII).

6.1.3. Gas Generator LOX Injector Purge System Supply. GN_2 at 3000 psig flows from Manifold A5157 through two separate lines to reference Pressure Regulator A5208 and Primary Regulator A5211. Reference Pressure Regulator A5208 reduces the pressure to 300 psig and supplies this pressure past Pressure Gage A5217; through Solenoid Valve A5210, which is energized just prior to launch; and through Orifice A5209 to dome-load Primary Regulator A5211. The primary regulator supplies 300-psig GN_2 past Relief Valve A5212 and Pressure Switch A5215 to the vehicle through Couplings A6608 and B301. From Coupling-Half B301, the GN_2 flows to the Gas Generator to purge the LOX injector (described in Volume VIII).

6.1.4. RP-1 Fuel Bubbling System Supply. GN_2 flows from Manifold A5157 past Manual Valve A5165 and through Manual Valve A5267 to reference Pressure Regulator A5185 and Primary Regulator A5186. The reference pressure regulator reduces the pressure to 290 psig and dome-loads Primary Regulator A5186. The primary regulator supplies 290-psig GN_2 past Manual Vent Valve A5187, Relief Valve A5189, Pressure Switch A5191, Pressure Gage A5193, and through Solenoid Valve A5194 to the vehicle through Couplings A6505 and B370. The GN_2 bubbles through the RP-1 in the fuel suction lines during LOX loading operations (described in Volume I).

6.1.5. S-I Control Pressure System Supply. Prior to propellant loading, Solenoid Valve A5158 is energized to pressurize the S-I control pressure system spheres. GN_2 at 3000 psig flows from Manifold A5157 through Solenoid Valve A5158 (or through Manual Bypass Valve A5159 if the solenoid valve fails), past Manual Vent Valve A5160, through Orifice A6628, and enters the vehicle through Couplings A6603 and B200 (figure 8). From Coupling-Half B200, GN_2 flows through 25-micron Filter B201, through Check Valve B202, and to Spheres B205 and B206, which it pressurizes to 3000 psig. Pressure Switch B203 signals adequate sphere pressurization to the LCC.

6.1.6. S-I Control System Operation. From Spheres B205 and B206, 3000 psig GN_2 flows through Fill and Vent Solenoid Valve B207, 25-micron Filter B208, and Pressure Regulator B209, which reduces the pressure to 750 psig, and to Manifold B211. Manual Valve B212 admits manifold pressure to 750 psig OK Pressure Switch B213. Relief Valve B210 provides overpressure protection for the manifold by relieving pressure above 950 psig. Manifold B211 supplies 750-psig GN_2 to Solenoid Valves B215, B216, and B222 for control of LOX system components (described in Volume II); to Solenoid Valves B217, which control Prevalves B103 and B155; through Manual Valve B214 to the H-1 engine gearbox pressurization ring manifold and LOX pump seal purge systems (described in Volume VIII); and to Solenoid Valve B220 in the calorimeter purge system. Just before engine ignition, Solenoid Valve B220 is energized to begin the calorimeter purge, which prevents combustion products or other foreign material from collecting on the calorimeter windows. GN_2 flows to Calorimeters B221 through Orifices B219, which restrict the flow rate to 3.0 ±0.3 scfm and protect the calorimeters from pressure surges. The orifices also prevent depletion of the control pressure system if a calorimeter is lost during flight. The calorimeter purge system operates throughout S-I stage flight and terminates at approximately the same time as outboard engine cutoff.

6.1.7. GN_2 Transfer to the Launcher Manifold. GN_2 at 3000 psig from valve panel 10 inlet lines flows through Manual Valve A5165 to reference Pressure Regulator A5166 and Primary Regulator A5167. Reference Pressure Regulator A5166 reduces the pressure to 750 psig and dome-loads Primary Regulator A5167. The primary regulator supplies 750-psig GN_2 past Relief Valve A5168, through Manual Valve A5177, and past Manual Vent Valve A5178 into the launcher manifold. Pressure Gage A5176 provides monitoring of valve panel 10 supply pressure to the launcher manifold and Pressure Switch A5174 provides a pressure OK signal for the supply line. Pressure upstream of Manual Valve A5177 is vented to atmosphere through Manual Vent Valve A5171, Check Valve A5172, and Vent Manifold A5255. Pressure Gage A5183 provides monitoring of launcher manifold pressure and Pressure Switch A5181 indicates launcher manifold pressure OK.

6.1.8. Launcher Manifold Distribution. From the 750-psig launcher manifold GN_2 flows through:

a. Solenoid Valve A2762 (Volume II) to the main LOX storage section.

b. Solenoid Valve A5616 (Volume II) to LOX Fill and Drain Valve B152.

c. Solenoid Valve A5618 (Volume II) to LOX Replenish Valve B151.

d. Solenoid Valve A5604 (Volume VII) to LOX filling mast release panel.

e. Solenoid Valve A5605 (Volume VII) to release short cable mast No. 4.

f. Solenoid Valve A5602 (Volume VII) to release short cable mast No. 2.

g. Solenoid Valve A5601 (Volume VII) to the fuel mast release panel.

h. Solenoid Valve A5617 (Volume VI) to Fuel Fill and Drain Valve B111.

i. Solenoid Valve A5600 (Volume I) to the fuel filling mast.

j. Electro-pneumatic Valve A4901 (Volume VI) in the S-I engine compartment conditioning system.

6.2. Helium Section Operation (figure 6)

Two supply lines transfer helium at 3000 psig from the PCD to the helium section of valve panel 10. After reducing the helium to the required operating pressures, the helium section effects distribution to the LOX system and the holddown arms release panel. To conserve helium during systems checkout, GN_2 at 3000 psig is routed from the GN_2 section of panel 10 to the helium section.

Helium at 3000 psig enters the valve panel through 5-micron Filters A5238 and A5237. Pressure Gage A5241 monitors the input pressure. Helium flow continues to Manual Valves A5242, A5289, A5268, and A5269 for distribution to various systems.

6.2.1. LOX Containers Pressurization Supply System. Helium at 3000 psig flows through Manual Valve A5242, past Manual Valve A5292, past Pressure Switch A5291, and to Solenoid Valves A6028 and A6029 that control helium flow to the LOX containers for pressurization (described in Volume II).

6.2.2. LOX Computer Sensing Line Purge. Helium from the inlet line flows through Manual Valve A5289 to Pressure Regulator A5280, which reduces the pressure to 450 psig. The helium flow continues past Pressure Gage A5281, past Relief Valve A5296, and through Orifice A6070; and purges the LOX computer sensing line that connects to the bottom of LOX container 0-C (described in Volume II). The LOX computer sensing line purge system is vented through Manual Vent Valve A5290, Check Valve A5294, and Vent Manifold A5255 to atmosphere when operations have been completed.

6.2.3. LOX Bubbling Supply System. Helium at 3000 psig from the inlet line flows through Manual Valve A5268 to reference Pressure Regulator A5244 and Primary Regulator A5245. Reference Pressure Regulator A5244 reduces the pressure to 315 psig and dome-loads Primary Regulator A5245. The primary regulator supplies 315-psig helium past Relief Valve A5246, Pressure Gage A5252, and Pressure Switch A5250, and through Solenoid Valve A5607 for LOX bubbling in the H-1 engine suction lines (described in Volume II). The LOX bubbling supply line can be vented to atmosphere through Manual Vent Valve A5247, Check Valve A5248, and Vent Manifold A5255.

6.2.4. Holddown Arms Release Panel Supply System. Helium at 3000 psig from the supply line flows through Manual Valve A5269 to reference Pressure Regulator A5271 and Primary Regulator A5270. The reference pressure regulator

reduces the pressure to 750 psig and dome-loads the primary regulator. The primary regulator supplies 750-psig helium past Relief Valve A5273, Manual Vent Valve A5272, Pressure Switch A5275, and Pressure Gage A5277, and through Check Valve A4443 to control components in the holddown arms release panel (described in Volume VII).

6.2.5. Helium System Checkout. GN_2 at 3000 psig from Manifold A5157 flows through Manual Valve A5254 and A5292 into the LOX container pressurization line. The GN_2 flows to Solenoid Valves A6028 and A6029 and through Manual Valve A5242 into the systems supply line for checkout of the systems described in 6.2.2., 6.2.3., and 6.2.4.

7. VALVE PANEL A

Valve panel A, located on the umbilical tower, receives 6000-psig helium from the PCD and 6000-psig GN_2 from valve panel B. The GN_2 pressure is used only for checkout purposes to conserve helium for launch operations. Valve panel A supplies helium to the LH_2 system, to the S-IV stage, and through the helium precool heat exchanger to valve panel B. At T -1 day, helium is supplied at 1500 psig to check the vehicle systems for pressure leaks. Prior to launch, the pressure is increased to 3000 psig and only that operation will be described.

Helium enters valve panel A and flows through Manual Valve A2300, through Filter A2302, past pressure monitoring components, and through Solenoid Valve A2312. The pressure monitoring components are typical throughout valve panel A and include Pressure Transducer A2304, which provides remote monitoring; Pressure Gage A2306, which provides local monitoring; and Snubber A2308, which protects the gage. Helium from Solenoid Valve A2312 flows through Solenoid Valve A2314 and Snubber A2385 into the valve panel cabinet, 'inerting' the atmosphere. From Solenoid Valve A2312, helium also flows through Check Valve A2316 to Manual Valves A2343 and A2324. Helium at 6000 psig flows through Manual Valve A2343 to remotely controlled Pressure Regulator A2344 and Primary Regulator A2349. The remotely controlled regulator, adjusted to reduce the pressure to 3000 psig, supplies this pressure past pressure monitoring equipment and dome-loads Primary Regulator A2349. The primary regulator reduces its input pressure to 3000 psig. The helium flows past Manual Valve A2350, pressure monitoring equipment, Relief Valve A2381, and Manual Vent Valve A2382 to Solenoid Valve A2383.

7.1. Ambient Helium Supply (figure 8)

Helium at 3000 psig flows through Solenoid Valve A2383 and 10-micron Filter A2384 and enters the S-IV stage through Couplings A3156 and E200. Helium flow continues through Check Valve E282, past fuel injector purge Check Valve E44 (Volume IX), to Check Valve E217, to Check Valve E262, and through Couplings E266 and E272 into Triplex Sphere B422.

7.1.1. RL10A-3 Engine Cooldown Ducts Purge. During countdown the cooldown ducts receive a helium trickle purge to disperse any GH_2 that may accumulate in the ducts. Helium flows through Check Valve E262, Solenoid Valve Bypass Orifice E263, Orifice E267, and enters the cooldown ducts through Orifices E268. Solenoid Valve E264 is energized to the closed position when countdown begins and remains closed until vehicle liftoff. At liftoff the solenoid valve opens to permit a higher flowrate of helium from triplex Spheres B422 to purge the cooldown ducts during S-I stage flight.

7.1.2. Make-up Pressurization System. The make-up pressurization system provides additional helium for LH_2 container pressurization during flight. Helium from the supply line flows through Check Valve E217 to Make-Up Pressurization Sphere E218. Pressure Switch E315 actuates at 2940 psig, indicating that the make-up pressurization sphere contains the required pressure. If the LH_2 container requires make-up pressure to supplement the normal container pressurization system (described in Volume III), Solenoid Valve E257 opens and Make-Up Pressurization Sphere E218 supplies helium to the container.

7.1.3. S-IV Stage Control Pressure System. The control pressure system supplies helium at a reduced pressure to solenoid control valves in the LOX, LH_2, and RL10A-3 engine systems. Helium at 3000 psig flows through Check Valve E201 to Control Pressure Sphere E202; past Solenoid Dump Valve E203, Pressure Switch E219, and Relief Valve E204, and through 10-micron Filter E205. From the filter, helium flows through Solenoid Valve E207 to Pressure Regulator E206, which reduces the pressure to 475 psig. Helium from the regulator flows past Pressure Switches E208-1, E208-2, and E220 and Plenum Chamber E271 to the LOX system (described in Volume II), the LH_2 system (described in Volume III), and the RL10A-3 engine system (described in Volume IX). If the control pressure downstream of Pressure Regulator E206 rises above 550 psig, Pressure Switches E208-1 and E208-2 will close Solenoid Valve E207 until the pressure decreases to a safe level. Pressure Switch E220 provides a signal to GSE indicating a low pressure condition if the control pressure decreases to 445 psig. Plenum Chamber E271 reduces pressure surges when sudden demands are placed on the control pressure system.

7.2. 50-psig Helium Purge Supply System (figure 7)

Helium at 3000 psig from Primary Regulator A2349 flows through Manual Valve A2350 to reference Pressure Regulator A2351 and Primary Regulator A2355. Reference Pressure Regulator A2351 reduces the pressure to 500 psig and supplies this pressure past pressure monitoring components to dome-load Primary Regulator A2355. The primary regulator supplies 500-psig helium past pressure monitoring components to reference Pressure Regulator A2360 and Primary Regulator A2364 that further reduce the pressure to 50 psig. Helium at 50 psig from Primary Regulator A2364 flows past pressure monitoring components, Relief Valve A2370, and Manual Vent Valve A2369 to Solenoid Valves A2321 and A2371.

Helium from Solenoid Valve A2371 flows through Orifice A2372 to Orifice A3167 and A3168 for purging LH_2 components (described in Volume III). Helium from Solenoid Valve A2321 flows to Manual Valve A2386 and through 10-micron Filter A2376 and Check Valve A3166 to purge the LH_2 fill line. Helium flows

through Manual Valve A2386 and Check Valve A2388 to purge the S-IV stage hydrogen vent line (described in Volume III).

7.3. Helium Transfer to the Helium Precool Heat Exchanger (figure 7)

Helium at 6000 psig from the valve panel A inlet line flows through Manual Valve A2324 to remotely controlled Pressure Regulator A2325 and Primary Regulator A2330. The remotely controlled regulator is adjusted to reduce 6000 psig to 3000 psig and dome-loads Primary Regulator A2330. The primary regulator supplies 3000-psig helium past Relief Valve A2331, pressure monitoring components, and Manual Vent Valve A2336 to the helium precool heat exchanger (described in paragraph 8).

7.4. Valve Panel A GN_2 Supply (figure 7)

Valve panel A utilizes GN_2 for checkout purposes to conserve helium for launch operations. GN_2 at 6000 psig from valve panel B enters valve panel A and flows past Manual Valve A2375; through Solenoid Valve A2320; past Vent Solenoid Valve A2318, which is closed during valve panel A GN_2 operation; and through Check Valve A2317. Valve panel A operation from this point is the same as previously described except that the medium is GN_2 instead of helium. Manual Valve A2375 is opened to allow GN_2 flow through Orifice A2322 to 'inert' the atmosphere of the valve panel cabinet. Vent Solenoid Valve A2318 vents the GN_2 supply line through Snubber A2319 when checkout has been completed.

8. HELIUM PRECOOL HEAT EXCHANGER

Located at the 108-foot level of the umbilical tower, the helium precool heat exchanger consists of a vacuum jacketed LH_2 container with a helium coil submerged in the LH_2 (figure 7). The heat exchanger receives helium from valve panel A and cools it to -410°F before transfer to valve panel B. The liquid level is maintained by a sensor opening and closing a supply valve in the LH_2 main fill and topping control unit.

From the main fill and topping control unit, LH_2 flows through LH_2 Inlet Valve A3917 into the area surrounding the precool coil unit. Liquid Level Sensor A3951 maintains the proper LH_2 level by opening and closing the solenoid valve that controls LH_2 Inlet Valve A3917 (Volume III). GH_2 from the heat exchanger vents through Check Valve A3377 to the launch facility burn pond. LH_2 boil-off is minimized by the vacuum jacket that insulates the LH_2 container. Transducer A3953 provides remote monitoring of jacket pressure and, in the event of excessive pressure build-up within the vacuum jacket, Burst Disc A3955 will rupture at 30 psig.

Helium at 3000 psig from valve panel A is cooled to -410°F as it flows through the coil in Helium Precool Heat Exchanger A3950. Helium flow continues past Temperature Transducer A3952 to the cold helium section of valve panel B.

9. VALVE PANEL B

Valve panel B, located at the 108-foot level of the umbilical tower, consists of a GN_2 section and a helium section (figure 7). The GN_2 section receives 6000-psig GN_2 from the PCD and effects distribution at 50 psig to various launch areas and vehicle LOX system purge networks, and at 750 psig to the LOX and LH_2 main fill and topping controls. The helium section receives 3000-psig helium from valve panel A via the helium precool heat exchanger and distributes 3000-psig helium to the S-IV stage cold helium spheres, and 50- to 500-psig helium to the LH_2 container pressurization system.

9.1. GN_2 Section Operation

GN_2 at 6000 psig flows from the PCD to valve panel B through Manual Shut-Off Valve A2519 and 10-micron Filter A2520 past monitoring devices to a line that supplies valve panel A and several systems in valve panel B. These monitoring devices, typical of those clustered throughout valve panel B, consist of pressure Transducer A2521, which provides remote monitoring of line pressure; 6000-psig Pressure Gage A2522, which provides panel pressure monitoring; and Snubber A2523, which protects the gage from pressure surge. Valve panel B supplies valve panel A with GN_2 as described in paragraph 7.4. GN_2 flows through Manual Valve A2525, Orifice A2526, and Snubber A2588 to purge and 'inert' the cabinet atmosphere.

GN_2 at 6000 psig flows to reference Pressure Regulator A2527 and Primary Regulator A2529. Reference Pressure Regulator A2527 reduces the pressure to 1500 psig and dome-loads Primary Regulator A2529. The primary regulator supplies 1500-psig GN_2 past pressure monitoring equipment to reference Pressure Regulator A2536, which dome-loads Primary Regulator A2540 to 750 psig; and, through Orifice A2591, to Primary Regulator A2540. 750-psig GN_2 from Primary Regulator A2540 flows past pressure monitoring equipment and Relief Valve A2545 to Solenoid Valve A2546, Manual Vent Valve A2548, and Manual Valve A2549.

9.1.1. S-IV LOX Nozzle and Umbilical Purges (figure 7). GN_2 at 750 psig flows through Manual Valve A2549 to reference Pressure Regulator A2550 and through Orifice A2592 to Primary Regulator A2551. Reference Pressure Regulator A2550 reduces the 750 psig to 50 psig and dome-loads Primary Regulator A2551. The primary regulator supplies 50-psig GN_2 past pressure monitoring components, Relief Valve A2559, and Manual Vent Valve A2560 to Solenoid Valves A2563 and A2561. Solenoid Valve A2563 permits GN_2 purging of LOX components on swing arm No. 2 (described in Volume II). Solenoid Valve A2561 permits GN_2 flow through Filter A2562 and Check Valve A3165 to purge the LOX fill and drain line (described in Volume II).

9.1.2. 750-psig GN_2 Valve Actuation Supply Pressure (figure 7). Solenoid Valve A2546 permits 750-psig GN_2 flow through 10-micron Filter A2547 to the control solenoid valves in valve panel B, the LH_2 main fill and topping control (described in Volume III), and the S-IV main LOX fill and replenish control system (described in Volume II); and to Solenoid Valve A3263 in the GH_2 vent release system (described in Volume VII).

The control solenoid valves in valve panel B and the pneumatic valves that they control are listed below.

Solenoid Valves	Pneumatic Valves
A2584	A2583
A2585	A2586
A2577	A2576
A2578	A2539

9.2. Helium Section Operation (figure 7)

Helium at approximately 3000 psig and -410°F flows from valve panel A to valve panel B via the helium heat exchanger as described previously. Helium at 3000 psig effects LH_2 container purge and LH_2 container pressurization respectively. After entering valve panel B, helium flows through two lines: one to the S-IV cold helium system, and the other to the LH_2 container purge and pressurization system.

9.2.1. LH_2 Container Purge and Pressurization System Supply. Helium at 3000 psig flows through Orifice A2581, Pneumatic Valve A2539, Check Valve A2580, past Manual Vent Valve A2575, and through Manual Valve A2573. Helium flow continues through 10-micron Filter A2574, over swing arm No. 2, and enters the S-IV stage through Couplings A3155 and E250 to purge the LH_2 container (described in Volume III). For LH_2 container pressurization (also described in Volume III), helium flows through the previously described path. Pneumatic Vent Valve A2576 and Manual Vent Valve A2575 can be opened to vent the LH_2 container purge and pressurization supply line.

9.2.2. S-IV Cold Helium System Supply. Helium at 3000 psig flows through Orifice A2582, Pneumatic Valve A2583, past Pneumatic Vent Valve A2586, through 10-micron Filter A2587, and enters the vehicle through Couplings A3157 and E225. Helium flows to Cold Helium Spheres E235, E234, and E233 (described in Volume II). The cold helium supply line is vented through Pneumatic Vent Valve A2586.

10. Q-BALL SYSTEM

10.1. Q-Ball (figure 10)

The Q-Ball system mounted directly into the air stream on the forward end of the launch escape system, provides backup measurements to the accelerometer control. Basically, the Q-Ball system consists of Q-Ball H8, which contains pressure transducers, six pressure sensing ports (four for angle-of-attack

and two for dynamic pressure), and an electronics package. The forward section of the Q-Ball contains the nose cap, the pneumatic manifolding, and the transducer package. The aft section contains the electronics circuit package.

The four angle-of-attack sensing ports are located in a circular pattern around the nose cap, with one port at each fin line. The two dynamic pressure ports are located at 45° between fin lines I and IV.

The basic parameter that Q-Ball H8 measures is differential pressure, proportional to the product of angle-of-attack (pitch and yaw) and dynamic pressure. Any deviation from planned course will create unequal pressures that are transmitted through the pressure tubes to the transducers in the Q-Ball system. Of the ten output signals from Q-Ball H8, four are transmitted to the vehicle--two pitch and two yaw. Six signals telemetered to ground receiving stations include two each for dynamic pressure, pitch angle of attack x dynamic pressure, and yaw angle of attack x dynamic pressure.

10.2. Q-Ball Cover And Removal System (figure 10)

Q-Ball Cover A5809 protects Q-Ball H8 against weather, contamination, and other damage prior to launch. The cover consists of a rigid conical fiberglass shell and a soft fiberglass cloth that encloses an inflatable nylon liner. The shell is equipped with a fitting for attaching an inflation hose and with two rings for attaching a retractor cable and a shock cord. A weight ring is mounted in the base of the shell to eliminate the need for mechanically connecting the cover to the vehicle.

The Q-Ball cover removal system consists of an elastic shock cord, a pneumatic control panel, a pneumatic retractor assembly, and the inflatable cover. The elastic shock cord, pre-adjusted to 20 pounds tension, aids the weight ring in holding the cover on the Q-Ball and also provides one method of retracting the cover from the vehicle path after cover removal from the Q-Ball.

The pneumatic control panel filters, regulates, and controls the GN_2 operating pressure to the inflatable liner in Q-Ball Cover A5809 and to Cylinder A5822 in the pneumatic retractor assembly. The pneumatic retractor assembly consisting of pneumatic Cylinder A5822, two pulleys, and two steel retractor cables provides a second method of retracting the Q-Ball cover. The steel cables and two tandem mounted pulleys connect the piston rod of Cylinder A5822 and the top attachment ring on Q-Ball Cover A5809. The pulleys effect a 4 to 1 increase in the cover retract speed. GN_2 for inflation of the nylon liner in the Q-Ball Cover flows from the pneumatic control panel through the inflation hose. The hose is clamped to the retraction cable, allowing sufficient slack to prevent fouling of the retraction cable during cover retract operation.

10.3. Q-Ball Cover Removal

From valve panel 5, 750-psig GN_2 enters the Q-Ball cover removal pneumatic control panel through Filter A5802 and passes through Manual Valve A5801 to a four way junction. From one line of the junction, GN_2 passes through Orifice

A5812 into the cabinet to purge and 'inert' the atmosphere. Bleed Fitting A5818 helps maintain a positive pressure in the cabinet by restricting GN_2 flow to atmosphere.

GN_2 from the four-way junction flows through Check Valve A5803 to pneumatic retractor cylinder Accumulator A5806, Manual Vent Valve A5804, Pressure Gage A5807, Pressure Switch A5808, and Solenoid Valve A5810.

GN_2 from the 4-way junction also flows through Pressure Regulator A5811, which reduces the pressure to 30 psig. GN_2 flow continues through Check Valve A5814 to cover inflation Accumulator A5816, Pressure Gage A5815, Pressure Switch A5819, and Solenoid Valve A5821. Pressure Switches A5808 and A5819 provide operating pressure OK signals to the LCC. Manual Vent Valves A5804 and A5817 permit venting of the pneumatic control panel through Bleed Fittings A5805 and A5813.

Between T -8 and T -7 minutes, two manually initiated commands from the blockhouse begin Q-Ball cover removal. The first command opens Solenoid Valve A5821 permitting GN_2 at 30 psig to flow through the inflation hose to Q-Ball Cover A5809, inflating the nylon liner. Inflation of the liner pushes the cover upward, free of Q-Ball H8, and the shock cord then retracts the cover from the vehicle flight path.

To ensure complete cover removal and retraction, a second command initiated four seconds after the first command opens Solenoid Valve A5810. GN_2 at 750 psig flows from the pneumatic control panel through Orifice A5823 to pneumatic Retract Cylinder A5822. The retracting piston in Retract Cylinder A5822 applies tension to the retract cables attached to the Q-Ball Cover and pulls the cover from the vehicle path. Piston speed is controlled by Orifice A5823. A limit switch actuates when the piston fully retracts, signaling to the blockhouse 'cover retracted.' If the nylon liner in Q-Ball cover A5809 fails to inflate, the pneumatic retractor assembly has enough force to pull the cover from the Q-Ball and retract it from the vehicle path.

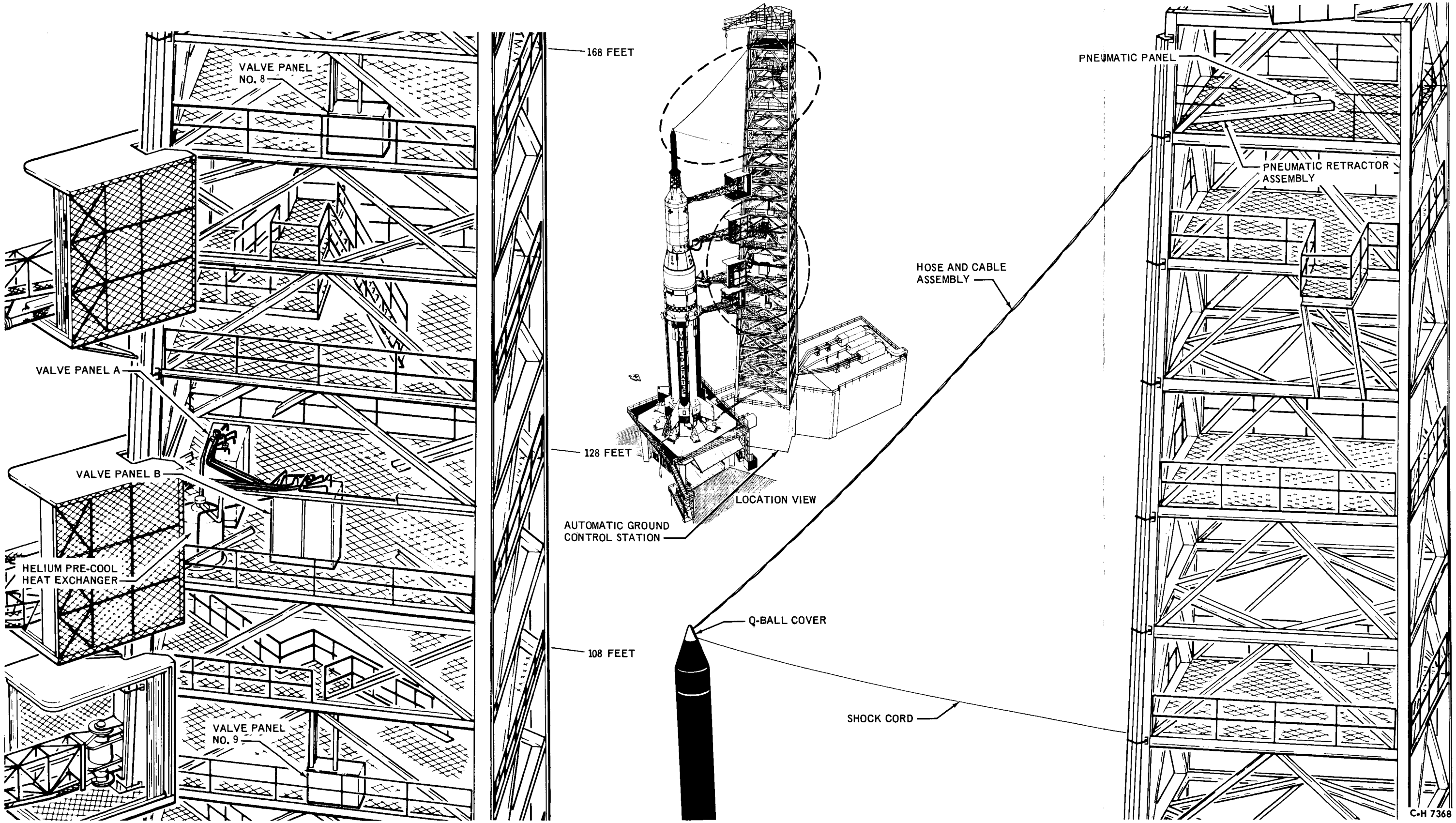

FIGURE 3. EQUIPMENT LOCATION

LIST OF FINDING NUMBERS

* FINDING NUMBER	NO. REQD	COMPONENT	REMARKS	VENDOR	DRAWING NUMBER	ELEC SYM
A1450						
A1451	1	Valve, Relief	Relief at 8000 ±200 psig Reseat at 6800 psig min.	Fluid Mechanics PN 2-920	75M50302	
A1452	1	Valve, Manual	2 in., Shut-Off	Annin Company PN 6510	75M50304	
A1453	1	Filter	10 Micron, 98% Nominal	Bendix PN 047213	75M50154-1	
A1454						
A1455						
A1456	1	Valve, Relief	Relief at 3350 ±150 psig Reseat at 3200 psig min.	Cornelius PN 116B100-2	75M50311-2	
A1457	1	Regulator, Dome Loaded	Primary Regulator, 6000 psig Inlet 3000 psig Outlet	Grove PN 10977HS08HR088D	75M50305-4	
A1458	1	Regulator, Dome Loaded	Primary Regulator, 6000 psig Inlet 3000 psig Outlet	Grove PN 10977HS08HR085D	75M50305-1	
A1459	1	Valve, Manual	2 in.	Annin Co. PN 4510	75M50306-2	
A1460						
A1461	1	Orifice	.031 in. dia.	Rocketdyne PN 9504-45062	10430000	

*Location: A = Ground; B = S-I Stage; E = S-IV Stage; G = Instrument Unit; H = Payload.

FINDING NUMBER	NO. REQD	COMPONENT	REMARKS	VENDOR	DRAWING NUMBER	ELEC SYM
A1462	1	Silencer		C. W. Morris Co. PN AA-3	10434141-2	
A1463	1	Valve, Solenoid	N.O.	Marotta PN 202873-113 (MV74)	75M01351	55A10A5
A1464	1	Gage, Pressure	0 to 5000 psig - Range 3000 psig - Normal Reading	Marsh PN 210-3SSFMH	75M50147-15	
A1465	1	Valve, Check	1/4 in., Cracking Pressure 4 psig max.	James, Pond, and Clark PN H249T1-4TT	10430234-1	
A1466	1	Valve, Manual	1/4 in., Vent	Robbins PN SSNA 250-4T-787	75M01305-1	
A1467	1	Regulator, Manual	Reference Pressure, 6000 psig Inlet 3000 psig Outlet	Grove PN 10931MA2B	75M50165-13	
A1468	1	Gage, Pressure	0 to 10000 psig-Range 6000 psig-Normal Reading	Marsh PN 210-3SSFMH	75M50147-18	
A1469	1	Transducer, Pressure	0 to 6000 psig-Range 6000 psig-Normal Reading	Giannini PN 46155NR-G-600-20	75M50148-2	55A10A6
A1470						
A1471	1	Valve, Manual	1/4 in., Shut-Off	Futurecraft PN 30404S	75M50161-1	
A1472						
A1473	1	Valve, Manual	1/4 in., Vent	Futurecraft PN 30404S	75M50161-1	

FINDING NUMBER	NO. REQD	COMPONENT	REMARKS	VENDOR	DRAWING NUMBER	ELEC SYM
A1474						
A1475	1	Valve, Relief	Relief at 8000 ±200 psig Reseat at 6800 psig min.	Fluid Mechanics PN 2-920	75M50302	
A1476	1	Valve, Manual	2 in., Shut-Off	Annin Company PN 6510	75M50304	59A12
A1477	1	Filter	10 micron, 98% nominal	Bendix PN 047213	75M50154-1	
A1478						
A1479						
A1480	1	Valve, Relief	Relieves at 3350 ±150 psig Reseat at 3200 psig min.	Cornelius PN 116-B-100-2	75M50311-2	
A1481	1	Regulator, Dome Loaded	Primary Regulator 6000 psig Inlet 3000 psig Outlet	Grove PN 10977HS08HR088D	75M50305-4	
A1482	1	Regulator, Dome Loaded	Primary Regulator 6000 psig Inlet 3000 psig Outlet	Grove PN 10977HS08HR088D	75M50305-4	
A1483	1	Valve, Manual	2 in., Shut-off	Annin Company PN 4510	75M50306-3	59A22
A1484						
A1485	1	Orifice	$.031\ ^{+.002}_{-.001}$ in. dia.	Rocketdyne PN 9504-45062	10430000	

FINDING NUMBER	NO. REQD	COMPONENT	REMARKS	VENDOR	DRAWING NUMBER	ELEC SYM
A1486	1	Silencer	3/8 in.	C. W. Morris Company PN AA-3	10434141-2	
A1487	1	Valve, Solenoid	N.O., 3-way	Marotta (Model MV74) PN 202873-113	75M01351	55A10A7
A1488	1	Gage, Pressure	0 to 5000 psig - Range 3000 psig - Normal Reading	Marsh PN 210-3SSFMH	75M50147-15	
A1489	1	Valve, Check	1/4 in., Cracking Pressure 4 psig max.	James, Pond, & Clark PN H249T1-4TT	10430234-1	
A1490	1	Valve, Manual	1/4 in., Vent	Robbins PN SSNA 250-4T-787	75M01305-1	
A1491	1	Regulator, Manual	Reference Pressure, 6000 psig Inlet 3000 psig Outlet	Grove PN 10931MA2B	75M50165-13	
A1492	1	Valve, Manual	1/4 in., Shut-Off	Futurecraft PN 30404S	75M50161-1	
A1493						
A1494	1	Valve, Manual	1/4 in., Vent	Futurecraft PN 30404S	75M50161-1	
A1495						
A1496	1	Valve, Relief	Cracks at 8000 ±200 psig Reseats at 6800 psig min.	Fluid Mechanics PN 2-290	75M50302	
A1497	1	Valve, Manual	Shut-Off with Position Switches	Annin PN 6510	75M50304	59A13

FINDING NUMBER	NO. REQD	COMPONENT	REMARKS	VENDOR	DRAWING NUMBER	ELEC SYM
A1498	1	Filter	10 microns, 98% nominal	Bendix PN 047213	75M50154	
A1499						
A1500	1	Valve, Manual	Shut-Off	Flodyne PN 2A11	75M51077-1	
A1501	1	Valve, Manual	Vent	Flodyne PN 2A11	75M51077-1	
A1502						
A1503						
A1504	1	Valve, Relief	Relief at 3350 ±150 psig Reseat at 3200 psig	Cornelius PN 116-B-100-2	75M50311-2	
A1505	1	Regulator, Dome Loaded	Primary Regulator 6000 psig Inlet 3000 psig Outlet	Grove PN 10977HS08HR088D	75M50305-4	
A1506	1	Regulator, Dome Loaded	Primary Regulator 6000 psig Inlet 3000 psig Outlet	Grove PN 10977HS08HR088D	75M50305-4	
A1507	1	Valve, Manual	2 in., Shut-Off	Annin PN 4510	75M50306-3	59A23
A1508	1	Valve, Check	Cracking Pressure 4 psig max.	James, Pond, and Clark PN 1-1299T1-4TT	10430233-1	
A1509	1	Manifold	GN_2 and He Vent			

FINDING NUMBER	NO. REQD	COMPONENT	REMARKS	VENDOR	DRAWING NUMBER	ELEC SYM
A1510 through A1513 are not functionally applicable to this system.						
A1514	1	Silencer			75M50787	
A1515 through A1523 are not functionally applicable to this system.						
A1524	1	Transducer, Pressure	0 to 4000 psig - Range 3000 psig-Normal Pressure	Giannini PN 46155NR-G-400-20MDD	75M50148-1	55A10A8
A1525	1	Gage, Pressure	0 to 5000 psig - Range 3000 psig-Normal Reading	Marsh PN 210-3SSFMH	75M50147-15	
A1526	1	Valve, Relief	Relief at 3500 ±100 psig Reseat at 3200 psig min.	Fluid Mechanics PN 2-916	10430216-5	
A1527	1	Valve, Relief	Relief at 3500 ±100 psig Reseat at 3200 psig min.	Fluid Mechanics PN 2-916	10430216-5	
A1528	1	Valve, Check	1 in., Cracking Pressure 4 psig max.	James, Pond, & Clark PN H249T1-16TT	10430234-5	
A1529	1	Valve, Manual	1 in., Vent	Futurecraft PN 30416S	75M50161-9	
A1530	1	Valve, Manual	1/2 in., Shut-Off	Futurecraft PN 30408S	75M50161-5	
A1531						
A1532	1	Valve, Manual	1 in., Shut-Off	Futurecraft PN 30416S	75M50161-9	

FINDING NUMBER	NO. REQD	COMPONENT	REMARKS	VENDOR	DRAWING NUMBER	ELEC SYM
A1533	1	Valve, Manual	1 in., Shut-Off	Futurecraft PN 30416S	75M50161-9	
A1534	1	Valve, Manual	1 in., Shut-Off	Futurecraft PN 30416S	75M50161-9	
A1535	1	Valve, Manual	1 in., Shut-Off	Futurecraft PN 30416S	75M50161-9	
A1536	1	Valve, Manual	1 in., Shut-Off	Futurecraft PN 30416S	75M50161-9	
A1537	1	Valve, Manual	1 in., Shut-Off	Futurecraft PN 30416S	75M50161-9	
A1538						
A1539	1	Switch, Pressure	Actuates at 15 psig	Custom PN 8G46	10430405	55A10A9
A1540						
A1541	1	Switch, Pressure	Actuates at 15 psig	Custom PN 8G46	10430405	55A10A11
A1542	1	Switch, Pressure	Actuates at 15 psig	Custom PN 8G46	10430405	55A10A12
A1543	1	Switch, Pressure	Actuates at 15 psig	Custom PN 8G46	10430405	55A10A13
A1544	1	Switch, Pressure	Actuates at 15 psig	Custom PN 8G46	10430405	55A10A14

FINDING NUMBER	NO. REQD	COMPONENT	REMARKS	VENDOR	DRAWING NUMBER	ELEC SYM
A1545	1	Switch, Pressure	Actuates at 15 psig	Custom PN 8G46	10430405	55A10A15
A1546	1	Switch, Pressure	Actuates at 15 psig	Custom PN 8G46	10430405	55A10A16
A1547 through A1556 are not functionally applicable to this system.						
A1557	1	Valve, Manual	3/8 in., Vent	Robbins PN NT-180	10437694	
A1558						
A1559	1	Valve, Manual	3/8 in., Vent	Robbins PN NT-180	10437694	
A1560	1	Valve, Manual	3/8 in., Vent	Robbins PN NT-180	10437694	
A1561	1	Valve, Manual	3/8 in., Vent	Robbins PN NT-180	10437694	
A1562	1	Valve, Manual	3/8 in., Vent	Robbins PN NT-180	10437694	
A1563	1	Valve, Manual	3/8 in., Vent	Robbins PN NT-180	10437694	
A1564	1	Valve, Manual	3/8 in., Vent	Robbins PN NT-180	10437694	
A1565						

FINDING NUMBER	NO. REQD	COMPONENT	REMARKS	VENDOR	DRAWING NUMBER	ELEC SYM
A1566	1	Valve, Check	3/8 in., Cracking Pressure 4 psig max.	James, Pond, & Clark PN H249T1-6TT	10430234-2	
A1567						
A1568	1	Valve, Check	3/8 in., Cracking Pressure 4 psig max.	James, Pond, & Clark PN H249T1-6TT	10430234-2	
A1569	1	Valve, Check	3/8 in., Cracking Pressure 4 psig max.	James, Pond, & Clark PN H249T1-6TT	10430234-2	
A1570	1	Valve, Check	3/8 in., Cracking Pressure 4 psig max.	James, Pond, & Clark PN H249T1-6TT	10430234-2	
A1571	1	Valve, Check	3/8 in., Cracking Pressure 4 psig max.	James, Pond, & Clark PN H249T1-6TT	10430234-2	
A1572	1	Valve, Check	3/8 in., Cracking Pressure 4 psig max.	James, Pond, & Clark PN H249T1-6TT	10430234-2	
A1573	1	Valve, Check	3/8 in., Cracking Pressure 4 psig max.	James, Pond, & Clark PN H249T1-6TT	10430234-2	
A1574						
A1575						
A1576						
A1577	1	Manifold	3000 psig GN_2, Distributor		75M50178-1	

FINDING NUMBER	NO. REQD	COMPONENT	REMARKS	VENDOR	DRAWING NUMBER	ELEC SYM
A1578						
A1579						
A1580	1	Manifold	3000 psig GN_2, Vent		75M50177	
A1581	1	Valve, Shuttle	1/4 in., 3-way	Clary Dynamics PN 524255	10434448	
A1582						
A1583						
A1584	1	Valve, Manual	Shut-Off	Futurecraft PN 30416S	75M50161-9	
A1585	1	Valve, Check	1/4 in., Cracking Pressure 4 psig max.	James, Pond, & Clark PN H249T1-4TT	10430234-1	
A1586	1	Valve, Check	1/4 in., Cracking Pressure 4 psig max.	James, Pond, & Clark PN H249T1-4TT	10430234-1	
A1587	1	Valve, Manual	2 in., Shut-Off	Annin Company PN 6510	75M50304	59A14
A1588	1	Filter	10 micron, 98% nominal	Bendix PN 047213	75M50154-1	
A1589						

FINDING NUMBER	NO. REQD	COMPONENT	REMARKS	VENDOR	DRAWING NUMBER	ELEC SYM
A1590						
A1591	1	Valve, Relief	Relief at 3350 ±150 psig Reseat at 3200 psig min.	Cornelius PN 116B100-2	75M50311-2	
A1592	1	Regulator, Dome Loaded	Primary Regulator 6000 psig Inlet 3000 psig Outlet	Grove PN 10977HS08HR088D	75M50305-4	
A1593	1	Regulator, Dome Loaded	Primary Regulator 6000 psig Inlet 3000 psig Outlet	Grove PN 10977HS08HR085D	75M50305-1	
A1594	1	Valve, Manual	2 in., Shut-Off	Annin Company PN 4510	75M50306-3	59A24
A1595						
A1596	1	Orifice	$.031\ ^{+.002}_{-.001}$ in. dia.	Rocketdyne PN 9504-45062	10430000	
A1597	1	Silencer	3/8 in.	C. W. Morris PN AA-3	10434141-2	
A1598	1	Valve, Solenoid	N.O., 3-way	Marotta (Model MV74) PN 202873-113	75M01351	55A10A18
A1599	1	Gage, Pressure	0 to 5000 psig - Range 3000 psig-Nominal Reading	Marsh PN 210-3SSFMH	75M50147-15	
A1600	1	Valve, Manual	1/4 in., Vent	Robbins PN SSNA 250-4T-787	75M01305-1	
A1601	1	Valve, Check	1/4 in., Cracking Pressure 4 psig max.	James, Pond, & Clark PN H249T1-4TT	10430234-1	

FINDING NUMBER	NO. REQD	COMPONENT	REMARKS	VENDOR	DRAWING NUMBER	ELEC SYM
A1602	1	Regulator, Manual	Reference Pressure, 6000 psig Inlet 3000 psig Outlet	Grove PN 10931MA2B	75M50165-13	
A1603	1	Gage, Pressure	0 to 10000 psig - Range 6000 psig-Normal Reading	Marsh PN 210-3SSFMH	75M50147-18	
A1604	1	Transducer, Pressure	0 to 6000 psig - Range 6000 psig-Normal Pressure	Giannini PN 46155NR-G-600-20	75M50148-2	55A10A19
A1605						
A1606	1	Valve, Manual	1/4 in., Shut-Off	Futurecraft PN 30404S	75M50161-1	
A1607						
A1608	1	Valve, Manual	1/4 in., Vent	Futurecraft PN 30404S	75M50161-1	
A1609						
A1610	1	Valve, Relief	Relief at 8000 ±200 psig Reseat at 6800 psig min.	Fluid Mechanics PN 2-920	75M50302	
A1611	1	Valve, Manual	2 in., Shut-Off	Annin Company PN 6510	75M50304	59A15
A1612	1	Filter	10 micron, 98% nominal	Bendix PN 047213	75M50154-1	
A1613						

FINDING NUMBER	NO. REQD	COMPONENT	REMARKS	VENDOR	DRAWING NUMBER	ELEC SYM
A1614						
A1615	1	Valve, Relief	Relief at 3350 ±150 psig Reseat at 3200 psig min.	Corneilus PN 116B100-2	75M50311-2	
A1616	1	Regulator, Dome Loaded	Primary Regulator 6000 psig Inlet 3000 psig Outlet	Grove PN 10977HS08HR088D	75M50305-4	
A1617	1	Regulator, Dome Loaded	Primary Regulator 6000 psig Inlet 3000 psig Outlet	Grove PN 10977HS08HR088D	75M50305-4	
A1618	1	Valve, Manual	2 in., Shut-Off	Annin Company PN 4510	75M50306-2	59A25
A1619						
A1620	1	Orifice	$.031^{+.002}_{-.001}$ in. dia.	Rocketdyne PN 9504-45062	10430000	
A1621	1	Silencer	3/8 in.	C. W. Morris Company PN AA-3	10434141-2	
A1622	1	Valve, Solenoid	N.O., 3-way	Marotta (Model MV74) PN 202873-113	75M01351	55A10A20
A1623	1	Gage, Pressure	0 to 5000 psig - Range 3000 psig-Normal Reading	Marsh PN 210-3SSFMH	75M50147-15	
A1624	1	Valve, Manual	1/4 in., Vent	Robbins PN SSNA 250-4T-787	75M01305-1	
A1625	1	Valve, Check	1/4 in., Cracking Pressure 4 psig max.	James, Pond, & Clark PN H249T1-4TT	10430234-1	

FINDING NUMBER	NO. REQD	COMPONENT	REMARKS	VENDOR	DRAWING NUMBER	ELEC SYM
A1626	1	Regulator, Manual	Reference Pressure 6000 psig Inlet 3000 psig Outlet	Grove PN 10931MA2B	75M50165-13	
A1627	1	Valve, Manual	1/4 in., Shut-Off	Futurecraft PN 30404S	75M50161-1	
A1628						
A1629	1	Valve, Manual	1/4 in., Vent	Futurecraft PN 30404S	75M50161-1	
A1630 through A1634 are not functionally applicable to this system.						
A1635	1	Manifold	3000 psig He, Distributor		75M50178-2	
A1636 through A1639 are not functionally applicable to this system.						
A1640	1	Transducer, Pressure	0 to 4000 psig-Range 3000 psig-Normal Pressure	Giannini PN 46155NR-G-400-20MOD	75M50148-1	55A10A21
A1641	1	Gage, Pressure	0 to 5000 psig-Range 3000 psig-Normal Reading	Marsh PN 210-3SSFMH	75M50147-15	
A1642	1	Valve, Relief	Relief at 3500 ±100 psig Reseat at 3200 psig min.	Fluid Mechanics PN 2-916	10430216-5	
A1643	1	Valve, Relief	Relief at 3500 ±100 psig Reseat at 3200 psig min.	Fluid Mechanics PN 2-916	10430216-5	
A1644	1	Valve, Check	1 in., Cracking Pressure 4 psig max.	James, Pond, & Clark PN HP249T1-16TT	10430234-5	

FINDING NUMBER	NO. REQD	COMPONENT	REMARKS	VENDOR	DRAWING NUMBER	ELEC SYM
A1645	1	Valve, Manual	1 in., Vent	Futurecraft PN 30416S	75M50161-9	
A1646	1	Valve, Manual	3/8 in., Shut-Off	Futurecraft PN 30406S	75M50161-3	
A1647	1	Valve, Manual	1/2 in., Shut-Off	Futurecraft PN 30408S	75M50161-5	
A1648						
A1649						
A1650	1	Valve, Manual	1 in., Shut-Off	Futurecraft PN 30416S	75M50161-9	
A1651	1	Valve, Manual	1 in., Shut-Off	Futurecraft PN 30416S	75M50161-9	
A1652 through A1654 are not functionally applicable to this system.						
A1655	1	Switch, Pressure	Actuates at 15 psig	Custom PN 8G46	10430405	55A10A22
A1656	1	Switch, Pressure	Actuates at 15 psig	Custom PN 8G46	10430405	55A10A23
A1657						
A1658						

FINDING NUMBER	NO. REQD	COMPONENT	REMARKS	VENDOR	DRAWING NUMBER	ELEC SYM
A1659	1	Switch, Pressure	Actuates at 15 psig	Custom PN 8G46	10430405	55A10A26
A1660	1	Switch, Pressure	Actuates at 15 psig	Custom PN 8G46	10430405	55A10A27
A1661 through A1672 are not functionally applicable to this system.						
A1673	1	Valve, Manual	3/8 in., Vent	Robbins PN NT-180	10437694	
A1674	1	Valve, Manual	3/8 in., Vent	Robbins PN NT-180	10437694	
A1675						
A1676						
A1677	1	Valve, Manual	3/8 in., Vent	Robbins PN NT-180	10437694	
A1678	1	Valve, Manual	3/8 in., Vent	Robbins PN NT-180	10437694	
A1679 through A1681 are not functionally applicable to this system.						
A1682	1	Valve, Check	3/8 in., Cracking Pressure 4 psig max.	James, Pond, & Clark PN H249T1-6TT	10430234-2	
A1683	1	Valve, Check	3/8 in., Cracking Pressure 4 psig max.	James, Pond, & Clark PN H249T1-6TT	10430234-2	

FINDING NUMBER	NO. REQD	COMPONENT	REMARKS	VENDOR	DRAWING NUMBER	ELEC SYM
A1684						
A1685						
A1686	1	Valve, Check	3/8 in., Cracking Pressure 4 psig max.	James, Pond, Clark PN H249T1-6TT	10430234-2	
A1687	1	Valve, Check	3/8 in., Cracking Pressure 4 psig max.	James, Pond, & Clark PN H249T1-6TT	10430234-2	
A1688 through A1693 are not functionally applicable to this system.						
A1694	1	Valve, Manual	1 in.	Futurecraft PN 30416S	75M50161-9	
A1695						
A1696						
A1697	1	Manifold	3000 psig He, Vent		57M50177-2	
A1698						
A1699	1	Valve, Relief	Relief at 8000 ±200 psig Reseat at 6800 psig	Fluid Mechanics PN 2-920	75M50302	
A1700 through A2050 are not functionally applicable to this system.						

FINDING NUMBER	NO. REQD	COMPONENT	REMARKS	VENDOR	DRAWING NUMBER	ELEC SYM
A2051						
A2052	1	Filter	5 micron, 95% nominal	Bendix PN 041675	10434444-3	
A2053	1	Gage, Pressure	0 to 5000 psig-Range 3000 psig-Normal Reading	Marsh PN 210-3SSFMH	75M50147-15	
A2054	1	Manifold	3000 psig GN_2, Supply		75M50175	
A2055	1	Valve, Manual	1/2 in., Shut-Off	Marotta SPV-27 PN 223143-3	75M51064-3	
A2056	1	Regulator, Manual	Reference Pressure 3000 psig Inlet 50 psig Outlet	Wallace O. Leonard PN 146050-34	10437835-2	
A2057	1	Regulator, Dome Loaded	Primary Regulator 3000 psig Inlet 50 psig Outlet	Marotta PN 226944-1	75M51102-1	
A2058	1	Valve, Relief	Relief at 60 ±3 psig Reseat at 54 psig min.	Fluid Mechanics PN 2-846	10430216-6	
A2059	1	Gage, Pressure	0 to 100 psig-Range 50 psig-Normal Reading	Marsh PN 210-CSFMH	75M50147-4	
A2060	1	Valve, Shuttle	1/4 in.	Clary Dynamics PN 524255	10434448	
A2061	1	Switch, Pressure	Actuates at 35 ±.75 psig Deactuates at 2 psi Below Actuation Pressure	Southwestern Ind. Inc. PN PS3704-35	10434297-3	55A5A10
A2062						

FINDING NUMBER	NO. REQD	COMPONENT	REMARKS	VENDOR	DRAWING NUMBER	ELEC SYM
A2063	1	Valve, Manual	1/4 in., Vent	Robbins PN SSNA 250-4T-787	75M01305-1	
A2064						
A2065						
A2066	1	Valve, Manual	1/2 in., Shut-Off	Marotta SPV-27 PN 223143-3	75M51064-3	
A2067	1	Valve, Manual	1/4 in., Vent	Robbins PN SSNA 250-4T-787	75M01305-1	
A2068	1	Valve, Check	1/4 in., Cracking Pressure 4 psig max.	James, Pond, & Clark PN H299T1-4TT	10430233-1	
A2069						
A2070						
A2071	1	Filter	2 micron, 95% nominal	Bendix PN 047309	10434444-1	
A2072	1	Valve, Check	1/4 in., Cracking Pressure 4 psig max.	James, Pond, & Clark PN H299T1-4TT	10430233-1	
A2073						
A2074						

FINDING NUMBER	NO. REQD	COMPONENT	REMARKS	VENDOR	DRAWING NUMBER	ELEC SYM
A2075	1	Switch, Pressure	Actuates at 15 ±5 psid Deactuates at 5 psi Below Actuation Pressure	Custom Components PN 8G46	10430405	55A5A12
A2076	1	Meter, Elapsed Time	0 to 9999.9 hr.	Cramer Controls Corp. PN 61S45	75M50172-2	55A5A13
A2077	1	Valve, Manual	3/8 in.	Robbins PN SSNA-375A-6T-768	75M01305-2	
A2078						
A2079	1	Valve, Check	3/8 in., Cracking Pressure 4 psig max.	James, Pond, & Clark PN H299T1-6TT	10430233-2	
A2080	1	Filter, Mechanical	10 micron, water separator	Robbins PN RAF-SPE (A847)	75M50173-1	
A2081	1	Purifier	Oil vapor removed to 1 ppm dewpoint of -100°F	Robbins PN RAF-2SP-769 & RAF-SPT13X	75M50174-1&2	
A2082	1	Orifice	.084 ±.001 in. dia. 275 SCFM	A. U. Stone PN H93C-.084	75M50184-4	
A2083	1	Valve, Solenoid	3/8 in., N.C.	Marotta (MV1307) PN 212783-1	10437739	55A5A7
A2084	1	Valve, Manual	3/8 in., Bypass	Robbins PN SSNA-375A-6T-768	75M01305-2	
A2085	1	Valve, Manual	1/4 in., Bearing Spheres Test Outlet	Robbins PN SSNA-250-4T-787	75M01305-1	
A2086						

FINDING NUMBER	NO. REQD	COMPONENT	REMARKS	VENDOR	DRAWING NUMBER	ELEC SYM
A2087	1	Valve, Manual	1/4 in., Vent	Robbins PN SSNA 250-4T-787	75M01305-1	
A2088	1	Valve, Check	1/4 in., Cracking Pressure 4 psig max.	James, Pond, & Clark PN H299T1-4TT	10430233-1	
A2089						
A2090	1	Regulator, Manual	Reference Pressure 3000 psig Inlet 750 psig Outlet	Wallace O. Leonard PN 187040-2	75M50182	
A2091	1	Regulator, Dome Loaded	Primary Regulator 3000 psig Inlet 750 psig Outlet	Grove PN 10988A068B	75M01356-2	
A2092	1	Manifold	750 psig GN_2, Supply		75M50175-2	
A2093	1	Valve, Relief	Relief at 875 ±44 psig Reseat at 790 psig min.	Fluid Mechanics PN 2-847	10430216-3	
A2094	1	Gage, Pressure	0 to 1000 psig - Range 750 psig-Normal Reading	Marsh PN 210-3SSFMH	75M50147-11	
A2095	1	Valve, Shuttle	1/4 in.	Clary Dynamics PN 524255	10434448	
A2096	1	Switch, Pressure	Actuates at 625 ±25 psig Deactuates at 50 psi below actuation pressure	Southwestern Ind. Inc. PN PS5116-625	10434443-6	55A5A5
A2097						
A2098	1	Valve, Manual	1/4 in., Vent	Robbins PN SSNA 250-4T-787	75M01305-1	

FINDING NUMBER	NO. REQD	COMPONENT	REMARKS	VENDOR	DRAWING NUMBER	ELEC SYM
A2099	1	Valve, Check	1/4 in., Cracking Pressure 4 psig max.	James, Pond, & Clark PN H299T1-4TT	10430233-1	
A2100						
A2101						
A2102	1	Purifier	Oil vapor removed to 1 ppm dewpoint of -100°F	Robbins PN RAF-2SP-769 & RAF-SPT13X	75M50174-1 & -2	
A2103	1	Purifier	Oil vapor removed to 1 ppm dewpoint of -100°F	Robbins PN RAF-2SP-769 & RAF-SPT13X	75M50174-1 & -2	
A2104 through A2107 are not functionally applicable to this system.						
A2108	1	Valve, Manual	3/8 in., Shut-Off	Robbins PN SSNA-375A-6T-768	75M01305-2	
A2109	1	Regulator, Manual	750 psig Inlet 25 ±2 psig Outlet	Wallace O. Leonard PN 146050-28	10437835-1	
A2110	1	Valve, Relief	Relief at 40 ±2 psig Reseat at 33 psig min.	James, Pond, and Clark PN 5159T1-6TB-40	10430079-1	
A2111	1	Gage, Pressure	0 to 60 psig - Range 25 psig - Normal Reading	Marsh PN 210-CSFMH	75M50147-3	
A2112	1	Valve, Shuttle	1/4 in.	Clary Dynamics PN 524255	10434448	
A2113	1	Switch, Pressure	Actuates at 21.5 ±.5 psig Deactuates at 1.5 psi below actuation pressure	Southwestern Ind. Inc. PN PS3704-21.5	10434297-4	55A5A4

FINDING NUMBER	NO. REQD	COMPONENT	REMARKS	VENDOR	DRAWING NUMBER	ELEC SYM
A2114						
A2115	1	Valve, Manual	1/4 in., Vent	Robbins PN SSNA 250-4T-787	75M01305-1	
A2116	1	Silencer	1/2 in.	C. W. Morris PN AA-4	10434141-1	
A2117						
A2118						
A2119	1	Valve, Manual	1/2 in., Shut-Off	Marotta SPV-27 PN 223143-3	75M51064-3	
A2120	1	Regulator, Manual	Reference Pressure 750 psig Inlet 50 psig Outlet	Wallace O. Leonard PN 146050-28	10437835-1	
A2121	1	Regulator, Dome Loaded	Primary Regulator 3000 psig Inlet 50 psig Outlet	Marotta PN 226944-1	75M51102-1	
A2122	1	Valve, Relief	Relief at 60 ±3 psig Reseat at 54 psig min.	Fluid Mechanics PN 2-846	10430216-6	
A2123	1	Gage, Pressure	0 to 100 psig - Range 50 psig - Normal Reading	Marsh PN 210-CSFMH	75M50147-4	
A2124	1	Valve, Shuttle	1/4 in.	Clary Dynamics PN 524255	10434448	
A2125	1	Switch, Pressure	Actuates at 35 ±.75 psig Deactuates at 2 psig below Actuation Pressure	Southwestern Ind. Inc. PN PS3704-35	10434297-3	55A5A6

FINDING NUMBER	NO. REQD	COMPONENT	REMARKS	VENDOR	DRAWING NUMBER	ELEC SYM
A2126						
A2127	1	Valve, Manual	1/4 in., Vent	Robbins PN SSNA 250-4T-787	75M01305-1	
A2128	1	Valve, Check	1/4 in., Cracking Pressure 4 psig max.	James, Pond, & Clark PN H249T1-4TT	10430234-1	
A2129						
A2130	1	Valve, Manual	1/2 in., Shut-Off	Marotta SPV-27 PN 223143-3	75M51064-3	
A2131	1	Valve, Manual	1/4 in., Vent	Robbins PN SSNA 250-4T-787	75M01305-1	
A2132	1	Valve, Check	1/4 in., Cracking Pressure 4 psig max.	James, Pond, & Clark PN H299T1-4TT	10430233-1	
A2133						
A2134	1	Valve, Check	Cracking Pressure 4 psig max.	James, Pond, & Clark PN H299T1-16TT	10430233-5	
A2135	1	Valve, Solenoid	N.O., 3-way	Marotta PN 204424 Model 123	10425701	55A5A3
A2136	1	Valve, Check	1/4 in., Cracking Pressure 4 psig max.	James, Pond, & Clark PN H299T1-4TT	10430233-1	
A2137						

FINDING NUMBER	NO. REQD	COMPONENT	REMARKS	VENDOR	DRAWING NUMBER	ELEC SYM
A2138	1	Valve, Solenoid	N.C., 3-way	Marotta PN 204424 Model 123	10425701	55A5A2
A2139	1	Valve, Manual	1/4 in., Vent	Hoke Series 280 PN 4PY281	75M02711-2	
A2140	1	Valve, Check	1/4 in., Cracking Pressure 4 psig max.	James, Pond, Clark PN H299T1-4TT	1040233-1	
A2141 through A2143 are not functionally applicable to this system.						
A2144	1	Filter	5 micron, 95% nominal	Bendix PN 041675	10434444-3	
A2145	1	Gage, Pressure	0 to 5000 psig-Range 3000 psig-Normal Reading	Marsh PN 210-3SSFMH	75M50147-15	
A2146	1	Valve, Solenoid	3/8 in., N.C.	Marotta (MV130T) PN 212783-1	10437739	55A5A8
A2147	1	Valve, Manual	3/8 in., By Pass	Robbins PN SSNA-375A-6T-768	75M01305-2	
A2148						
A2149						
A2150	1	Valve, Manual	1/4 in., Vent	Robbins PN SSNA 250-4T-787	75M01305-1	
A2151	1	Valve, Check	1/4 in., Cracking Pressure 4 psig, max.	James, Pond, & Clark PN H299T1-4TT	10430233-1	

FINDING NUMBER	NO. REQD	COMPONENT	REMARKS	VENDOR	DRAWING NUMBER	ELEC SYM
A2152 through A2156 are not functionally applicable to this system.						
A2157	1	Valve, Relief	Relief at 70 ±5 psig Reseat at 55 psig min.	James, Pond, & Clark PN 5159T1-4TB-70	10430079-5	
A2158	1	Valve, Relief	Relief at 70 ±5 psig Reseat at 55 psig min.	James, Pond, & Clark PN 5159T1-4TB-70	10430079-5	
A2159						
A2160						
A2161	1	Gage, Pressure	0-1000 psig - Range 750 psig - Normal Reading	Marsh PN 210-3SSFMH	75M50147-11	
A2162	1	Valve, Manual	1 in., Supply Shut-Off	Marotta PN 223774-1	75M51063-1	
A2163	1	Valve, Manual	3/8 in., Vent	Robbins PN SSNA-375A-6T-768	75M01305-2	
A2164	1	Valve, Check	Cracking Pressure 4 psig max.	James, Pond, & Clark PN H299T1-6TT	10430233-2	
A2165	1	Valve, Check	Cracking Pressure 4 psig max.	James, Pond, & Clark PN H299T1-16TT	10430233-5	
A2166 through A2299 are not functionally applicable to this system.						
A2300	1	Valve, Manual	1/2 in.	DAC (Douglas Aircraft Co.) PN 3864055-1		

FINDING NUMBER	NO. REQD	COMPONENT	REMARKS	VENDOR	DRAWING NUMBER	ELEC SYM
A2301						
A2302	1	Filter	1/2 in., 10 micron	DAC PN 3864058-1		
A2303						
A2304	1	Transducer, Pressure		DAC PN 7861472-555		497PT20
A2305						
A2306	1	Gage, Pressure	0 to 10000 psig-Range 6000 psig-Normal Reading	DAC PN S-3732740V-12		
A2037	1					
A2038	1	Snubber				
A2039 through A2311 are not functionally applicable to this system.						
A2312	1	Valve, Solenoid	N.C.	DAC PN 3864060-1		497ES6
A2313						
A2314	1	Valve, Solenoid	N.O.	DAC PN 3864060-1		497ES5

FINDING NUMBER	NO. REQD	COMPONENT	REMARKS	VENDOR	DRAWING NUMBER	ELEC SYM
A2315						
A2316	1	Valve, Check	1/2 in.	DAC PN 3864067-1		
A2317	1	Valve, Check	1/2 in.	DAC PN 3864067-1		
A2318	1	Valve, Solenoid	N.O.	DAC PN 3864061-1		497NS5
A2319	1	Snubber				
A2320	1	Valve, Solenoid	N.O.	DAC PN 3864060-1		497NS4
A2321	1	Valve, Solenoid	N.C.	DAC PN 3864062-501		497ES1
A2322	1	Orifice				
A2323						
A2324	1	Valve, Manual	1/2 in.	DAC PN 3864055-1		
A2325	1	Regulator, Solenoid Operated	Remotely Controlled 6000 psig Inlet 3000 psig Outlet	DAC PN 5865918-1		497E8
A2326	1	Gage, Pressure	0 to 5000 psig - Range 3000 psig-Normal Reading	DAC PN S-3732740U-12		

FINDING NUMBER	NO. REQD	COMPONENT	REMARKS	VENDOR	DRAWING NUMBER	ELEC SYM
A2327	1	Snubber				
A2328	1	Transducer, Pressure		DAC PN 5865846		497PT22
A2329						
A2330	1	Regulator, Dome Loaded	6000 psig Inlet 3000 psig Outlet	DAC PN 3864065-1		
A2331	1	Valve, Relief	Relief at 3500 ±105 psig Reseat at 3000 psig min.	DAC PN 384068-507		
A2332						
A2333	1	Transducer, Pressure		DAC PN 5865846		497PT23
A2334	1	Snubber				
A2335	1	Gage, Pressure	0 to 5000 psig - Range 3000 psig-Normal Reading	DAC PN S-3732740U-12		
A2336	1	Valve, Manual	1/4 in., Vent	DAC PN 3864056-1		
A2337 through A2342 are not functionally applicable to this system.						
A2343	1	Valve, Manual	1/2 in.	DAC PN 3864055-1		

FINDING NUMBER	NO. REQD	COMPONENT	REMARKS	VENDOR	DRAWING NUMBER	ELEC SYM
A2344	1	Regulator, Solenoid Operated	Remotely Controlled 6000 psig Inlet 3000 psig Outlet	DAC PN 5865918-1		497E5
A2345	1	Gage, Pressure	0 to 5000 psig - Range 3000 psig - Normal Reading	DAC PN S-3732740U-12		
A2346	1	Snubber				
A2347	1	Transducer, Pressure		DAC PN 5865846		497PT19
A2348						
A2349	1	Regulator, Dome Loaded	6000 psig Inlet 3000 psig Outlet	PN 3864065-1		
A2350	1	Valve, Manual	1/2 in.	PN 3864056-501		
A2351	1	Regulator, Manual	3000 psig Inlet 5000 psig Outlet	DAC PN 3864064-501		
A2352	1	Gage, Pressure	0 to 1000 psig - Range 500 psig - Normal Reading	DAC PN S-3732740M-12		
A2353	1	Snubber				
A2354						
A2355	1	Regulator, Dome Loaded	3000 psig Inlet 500 psig Outlet	DAC PN 3864066-1		

FINDING NUMBER	NO. REQD	COMPONENT	REMARKS	VENDOR	DRAWING NUMBER	ELEC SYM
A2356						
A2357	1	Transducer, Pressure		DAC PN 5865846		497PT17
A2358	1	Snubber				
A2359	1	Gage, Pressure	0 to 1000 psig - Range 500 psig-Normal Reading	DAC PN S-3732740M-12		
A2360	1	Regulator, Manual	500 psig Inlet 50 psig Outlet	DAC PN 3864064-1		
A2361	1	Gage, Pressure	0 to 100 psig - Range 50 psig-Normal Reading	DAC PN S-3732740E-12		
A2362	1	Snubber				
A2363						
A2364	1	Regulator, Dome Loaded	500 psig Inlet 50 psig Outlet	DAC PN 3864066-1		
A2365						
A2366	1	Transducer, Pressure		DAC PN 5865846		497PT16
A2367	1	Snubber				

FINDING NUMBER	NO. REQD	COMPONENT	REMARKS	VENDOR	DRAWING NUMBER	ELEC SYM
A2368	1	Gage, Pressure	0 to 100 psig - Range 50 psig-Normal Reading	DAC PN S-3732740E-12		
A2369	1	Valve, Manual	1/4 in., Vent	DAC PN 3864056-1		
A2370	1	Valve, Relief	Relief at 60 ±1.8 psig Reseat at 50 psig min.	DAC PN 3864068-501		
A2371	1	Valve, Solenoid	N.C.	DAC PN 3864062-1		497ES2
A2372	1	Orifice		DAC PN 2253887-4C-024		
A2373						
A2374						
A2375	1	Valve, Manual	1/4 in.	DAC PN 3864056-1		
A2376	1	Filter	1/2 in., 10 micron	DAC PN 3865916-1		
A2377						
A2378	1	Transducer, Pressure		DAC PN 5865846		497PT18
A2379	1	Snubber				

FINDING NUMBER	NO. REQD	COMPONENT	REMARKS	VENDOR	DRAWING NUMBER	ELEC SYM
A2380	1	Gage, Pressure	0 to 5000 psig-Range 3000 psig - Normal Reading	DAC PN S-3732740U-12		
A2381	1	Valve, Relief	Relief at 3500 ±105 psig Reseat at 3000 psig min.	DAC PN 3864068-507		
A2382	1	Valve, Manual	1/4 in., Vent	DAC PN 3864056-1		
A2383	1	Valve, Solenoid	N.C.	DAC PN 3864062-501		497ES4
A2384	1	Filter	1/2 in., 10 micron	DAC PN 3865916-1		
A2385	1	Snubber				
A2386	1	Valve, Manual	1/2 in.	DAC PN 3864056-501		
A2387 through A2518 are not functionally applicable to this system.						
A2519	1	Valve, Manual	1/2 in.	DAC PN 3864055		
A2520	1	Filter	10 micron	DAC PN 3864058-1		
A2521	1	Transducer, Pressure		DAC PN 7861472-539		
A2522	1	Gage, Pressure	0 to 10000 psig-Range 6000 psig-Normal Reading	DAC PN S-3732740V-12		
A2523	1	Snubber				

FINDING NUMBER	NO. REQD	COMPONENT	REMARKS	VENDOR	DRAWING NUMBER	ELEC SYM
A2524						
A2525	1	Valve, Manual	1/4 in., Vent	DAC PN 3864056-1		
A2526	1	Orifice				
A2527	1	Regulator, Manual	6000 psig Inlet 3000 psig Outlet	DAC PN 3864064-509		
A2528	1	Gage, Pressure	0 to 5000 psig - Range 3000 psig - Normal Reading	DAC PN S-3732740U-12		
A2529	1	Regulator, Dome Loaded	6000 psig Inlet 3000 psig Outlet	DAC PN 3864065-1		
A2530	1	Snubber				
A2531						
A2532	1	Gage, Pressure	0 to 5000 psig - Range 3000 psig - Normal Reading	DAC PN S-3732740U-12		
A2533	1	Snubber				
A2534						
A2535	1	Transducer, Pressure	1/4 in.	DAC PN 7861472-547		
A2536	1	Regulator, Manual	1500 psig Inlet 750 psig Outlet	DAC PN 3864064-503		

FINDING NUMBER	NO. REQD	COMPONENT	REMARKS	VENDOR	DRAWING NUMBER	ELEC SYM
A2537	1	Gage, Pressure	0 to 1000 psig - Range 750 psig - Normal Reading	DAC PN S-3732740M-12		
A2538	1	Snubber				
A2539	1	Valve, Pneumatic	2 1/2 in., N.C.	DAC PN 3864048-1		498EP2
A2540	1	Regulator, Dome Loaded	1500 psig Inlet 750 psig Outlet	DAC PN 3864066-1		
A2541						
A2542	1	Snubber				
A2543	1	Gage, Pressure	0 to 1000 psig - Range 750 psig - Normal Reading	DAC PN S-3732740M-12		
A2544	1	Transducer, Pressure		DAC PN 7861472-529		
A2545	1	Valve, Relief	Relief at 850 ±25.5 psig Reseat at 750 psig min.	DAC PN 3864068-1		
A2546	1	Valve, Solenoid	1/2 in., N.C.	DAC PN 3864062-501		498NS1
A2547	1	Filter	1/2 in., 10 micron	DAC PN 3865916-1		
A2548	1	Valve, Manual	1/4 in., Vent	DAC PN 3864056-1		
A2549	1	Valve, Manual	Shut-Off	DAC PN 3864056-501		

FINDING NUMBER	NO. REQD	COMPONENT	REMARKS	VENDOR	DRAWING NUMBER	ELEC SYM
A2550	1	Regulator, Manual	750 psig Inlet 50 psig Outlet	DAC PN 3864064-1		
A2551	1	Regulator, Dome Loaded	750 psig Inlet 50 psig Outlet	DAC PN 3864066-1		
A2552						
A2553	1	Snubber				
A2554	1	Gage, Pressure	0 to 100 psig-Range 50 psig-Normal Reading	DAC PN S-3732740E-12		
A2555	1	Transducer, Pressure		DAC PN 7861472-509		
A2556	1	Gage, Pressure	0 to 100 psig-Range 50 psig-Normal Reading	DAC PN S-3732740E-12		
A2557	1	Snubber				
A2558						
A2559	1	Valve, Relief	Relief at 60 ±1.8 psig Reseat at 50 psig min.	DAC PN 3864068-501		
A2560	1	Valve, Manual	1/4 in., Vent	DAC PN 3864056-1		
A2561	1	Valve, Solenoid	N.C.	DAC PN 3864062-501		498NS2

FINDING NUMBER	NO. REQD	COMPONENT	REMARKS	VENDOR	DRAWING NUMBER	ELEC SYM
A2562	1	Filter	1/2 in., 10 micron	DAC PN 3865916-1		
A2563	1	Valve, Solenoid	1/4 in., N.C.	DAC PN 3864062-1		498NS3
A2564 through A2572 are not functionally applicable to this system.						
A2573	1	Valve, Manual	1/2 in.	DAC PN 3864056-501		
A2574	1	Filter	1 3/4 in., 10 micron	DAC PN 3865916-1		
A2575	1	Valve, Manual Vent	1/4 in.	DAC PN 3864056-1		
A2576	1	Valve, Pneumatic	4 1/4 in., N.C.	DAC PN 3865919-1		498EP3
A2577	1	Valve, Solenoid	N.C.	DAC PN 3863940-1		498NS8
A2578	1	Valve, Solenoid	N.C.	DAC PN 3863940-1		498NS7
A2579						
A2580	1	Valve, Check	1/2 in.	DAC PN 3864057-1		
A2581	1	Orifice				

FINDING NUMBER	NO. REQD	COMPONENT	REMARKS	VENDOR	DRAWING NUMBER	ELEC SYM
A2582	1	Orifice				
A2583	1	Valve, Pneumatic	2 1/2 in., N.C.	DAC PN 3864048-1		498EP1
A2584	1	Valve, Solenoid	1/4 in.	DAC PN 3863940-1		498NS6
A2585	1	Valve, Solenoid	1/4 in.	DAC PN 3863940-1		498NS9
A2586	1	Valve, Pneumatic	4 1/4 in., N.C.	DAC PN 3865919-501		498EP6
A2587	1	Filter	1/2 in., 10 micron	DAC PN 3865916-1		
A2588	1	Snubber				
A2589 and A2590 are not functionally applicable to this system.						
A2591	1	Orifice		DAC PN S2253887-8C-250		
A2592	1	Orifice		DAC PN S2253887-8C-172		
A2593 through A3047 are not functionally applicable to this system.						
A3048	1	Coupling-Half, Quick Disconnect	3000 psig He	E. B. Wiggins Oil Tool Co. Inc. PN 6300R10244	75M02220	

FINDING NUMBER	NO. REQD	COMPONENT	REMARKS	VENDOR	DRAWING NUMBER	ELEC SYM
A3049						
A3050						
A3051						
A3052	1	Orifice	0.2 in. dia.		75M04703	
A3053 through A3062 are not functionally applicable to this system.						
A3063	1	Coupling-Half, Quick Disconnect	Fuel Spheres Pressurize	E. B. Wiggins Oil Tool Co. Inc. PN 6200R76A12	75M02218	
A3064 through A3155 are not functionally applicable to this system.						
A3156	1	Coupling-Half, Quick Disconnect	Ambient He Fill	E.B. Wiggins Oil Tool Co. Inc. PN 6200R78A4	75M02212	
A3157	1	Coupling-Half, Quick Disconnect	Cold He Fill	On-Mark Couplings, Inc. PN 1-1162-8	75M05194	
A3158 through A3247 are not functionally applicable to this system.						
A3248	1	Coupling-Half, Quick Disconnect	Air Bearing Sphere Fill	E.B. Wiggins Oil Tool Co. Inc. PN 6200R67A6	75M02216	
A3249 through A3257 are not functionally applicable to this system.						

FINDING NUMBER	NO. REQD	COMPONENT	REMARKS	VENDOR	DRAWING NUMBER	ELEC SYM
A3258	1	Valve, Check	Cracking Pressure 3 psig	James, Pond, & Clark PN P-4-698-3	75M00178	
A3259	1	Orifice		A. U. Stone PN H228-031	75M50562-1	
A3260 through A3800 are not functionally applicable to this system.						
A3801	1	Valve, Manual	1/2 in., Shut-Off	Marotta PN 223143-2	75M50164-1	
A3802	1	Filter	5 micron, 95% nominal	Bendix PN 041675	10434444-3	
A3803						
A3804	1	Gage, Pressure	0 to 5000 psig - Range 3000 psig-Normal Reading	U. S. Gauge PN AW1827AK01	10437806	
A3805	1	Valve, Manual	1/4 in., Vent	Robbins PN SSNG 250-4T-768	75M01720-4	
A3806 through A3811 are not functionally applicable to this system.						
A3812	1	Regulator, Manual	3000 psig Inlet 750 psig Outlet	W. O. Leonard PN 187040-2	75M50182	
A3813	1	Regulator, Dome Loaded	3000 psig Inlet 750 psig Outlet	Grove PN 10988A066B	75M01356-1	
A3814	1	Valve, Relief	Relief at 876 ±44 psig Reseat at 790 psig min.	Fluid Mechanics PN 2-847	10430216-3	

FINDING NUMBER	NO. REQD	COMPONENT	REMARKS	VENDOR	DRAWING NUMBER	ELEC SYM
A3815 through A3818 are not functionally applicable to this system.						
A3819	1	Valve, Manual	1/4 in., Vent	Robbins PN SSNG 250-4T-768	75M01720-4	
A3820	1	Gage, Pressure	0 to 1000 psig-Range 750 psig-Normal Reading	U. S. Gauge PN AW1827AH01	10437804	
A3821 through A3825 are not functionally applicable to this system.						
A3826	1	Silencer	1 in.	C. W. Morris PN AA-8	10434141-3	
A3827	1	Silencer	1 in.	C. W. Morris PN AA-8	10434141-3	
A3828 through A3843 are not functionally applicable to this system.						
A3844	1	Orifice	.031 ±.001 in. dia. 50 psig to 3 in. H_2O Press. Reduc.	A. U. Stone PN H228-03	75M50562	
A3845	1	Calibrated Bleed	1248 scim at 3 in H_2O	Del Mfg. Co. PN 10023	75M02047	
A3846 through A3949 are not functionally applicable to this system.						
A3950	1	Heat Exchanger		DAC PN 7863909-501		
A3951	1	Sensor, Liquid Level	Low, High, & Maximum Level Indication	DAC PN 7864143-501		

FINDING NUMBER	NO. REQD	COMPONENT	REMARKS	VENDOR	DRAWING NUMBER	ELEC SYM
A3952	1	Transducer, Temperature		DAC PN 7861475-551		
A3953	1	Transducer, Pressure	0 to 1000 microns Hg. Vacuum - Range 50 Microns-Normal	Consolidated Vacuum Corp. PN GTC-004		
A3954	1	Valve, Manual	Vent	VECCO PN RI00P		
A3955	1	Disc, Burst	Rupture at 30 ±5 psig			
A3956 through A5000 are not functionally applicable to this system.						
A5001	1	Valve, Manual	1 in., Shut-Off	Marotta PN 223774	75M51063	
A5002	1	Filter	5 micron, 98.6% Nominal	Bendix PN 041675	10434444-3	
A5003						
A5004	1	Gage, Pressure	0 to 5000 psig-Range 3000 psig-Normal Reading	U. S. Gauge PN AW1827AK01	10437806-9	
A5005	1	Valve, Manual	3/8 in., Vent	Robbins PN NT-180	10437694	
A5006	1	Valve, Manual	1/4 in., Fuels Spheres Test Vent	Robbins PN SSNA 250-4T-787	75M01305-1	
A5007	1	Valve, Manual	3/8 in., Vent	Robbins PN NT-180	10437694	

FINDING NUMBER	NO. REQD	COMPONENT	REMARKS	VENDOR	DRAWING NUMBER	ELEC SYM
A5008	1	Valve, Manual	3/8 in., Bypass	Robbins PN NT-180	10437694	
A5009	1	Valve, Solenoid	N.C.	Marotta PN 212783-1 (MV130T)	10437739	57A9A5
A5010	1	Valve, Solenoid	N.C.	Marotta PN 216774-1 (MV159CA)	10437737	57A9A14
A5011 through A5013 are not functionally applicable to this system.						
A5014	1	Silencer	3/8 inch	C. W. Morris PN AA-3	10434141-2	
A5015 through A5017 are not functionally applicable to this system.						
A5018	1	Regulator, Dome Loaded	3000 psig Inlet 750 psig Outlet	Grove PN M12951N	75M02156-2	
A5019	1	Regulator, Manual	3000 psig Inlet 750 psig Outlet	W. O. Leonard PN 187040-2	75M50182	
A5020	1	Valve, Relief	Relief at 850 ±43 psig Reseat at 770 psig min.	James, Pond, & Clark PN 5159T1-6TT-1020	75M02172-3	
A5021	1	Gage, Pressure	0 to 1000 psig-Range 750 psig-Normal Reading	U. S. Gauge PN AW1827AH01	10437804	
A5022	1	Valve, Manual	1/4 in., Vent	Robbins PN SSNA 250-4T-787	75M01305-1	
A5023	1	Valve, Solenoid	N.C., 3-way	Marotta (MV123) PN 204424	10425701	57A9A6

FINDING NUMBER	NO. REQD	COMPONENT	REMARKS	VENDOR	DRAWING NUMBER	ELEC SYM
A5024 through A5045 are not functionally applicable to this system.						
A5046	1	Valve, Manual	3/8 in.	Robbins PN NT-180	10437694	
A5047	1	Gage, Pressure	0 to 5000 psig-Range 3000 psig-Normal Reading	U. S. Gauge PN AW1827AK01	10437806-9	
A5048	1	Filter	0.80 ±.05 microns nominal	Millipore PN XX4504700	75M50561-1	
A5049						
A5050	1	Regulator, Manual	3000 psig Inlet 450 psig Outlet	W. O. Leonard PN 128390-4	75M50726-2	
A5051						
A5052						
A5053	1	Orifice	450 to 150 psig Pressure Reduction	W. O. Leonard PN 156040-5	75M50727-2	
A5054						
A5055	1	Switch, Pressure	Actuates at 50 psig Increasing Pressure, Deactuates at 100 psig Inc. Press.	Meletron PN M7141EB-32A-2	75M50728-1	57A9A3
A5056	1	Orifice	50 psig to 16 psig Pressure Reduction (Approx.)	A. U. Stone PN P881-8	75M04165-8	

FINDING NUMBER	NO. REQD	COMPONENT	REMARKS	VENDOR	DRAWING NUMBER	ELEC SYM
A5057 through A5060 are not functionally applicable to this system.						
A5061	1	Orifice	450 psig to 150 psig Pressure Reduction	W. O. Leonard PN 156040-5	75M50727-2	
A5062						
A5063	1	Switch, Pressure	Actuates at 50 psig Increasing Pressure, Deactuates at 100 psig Inc. Press.	Meletron PN M7141EB-32A-1	75M50728-1	57A9A4
A5064	1	Orifice	50 psig to 16 psig Pressure Reduction (Approx.)	A. U. Stone PN P881-8	75M04165-8	
A5065 through A5072 are not functionally applicable to this system.						
A5073	1	Valve, Relief	1/4 in., Relief at 600 psig	James, Pond, & Clark PN 5159T1-4TB-600	10430079-6	
A5074 through A5077 are not functionally applicable to this system.						
A5078	1	Orifice	.031 ±.001 in. dia.	A. U. Stone PN H228-031	75M50562-1	
A5079	1	Plate, Calibrated Bleed	1248 scim at 3 in. H_2O	Del Mfg. Co. PN 10023	75M02047	
A5080 through A5151 are not functionally applicable to this system.						
A5152	1	Filter	5 micron, 98.6% nominal	Bendix PN 041675	10434444-3	

FINDING NUMBER	NO. REQD	COMPONENT	REMARKS	VENDOR	DRAWING NUMBER	ELEC SYM
A5153	1	Filter	5 micron, 98.6% nominal	Bendix PN 041675	10434444-3	
A5154						
A5155						
A5156	1	Gage, Pressure	0 to 5000 psig-Range 3000 psig-Normal Reading	Marsh PN 210-3SSFMH	75M50147-15	
A5157	1	Manifold	3000 psig GN_2, Supply		10432680	
A5158	1	Valve, Solenoid	N.C.	Marotta PN 212783-1 (MV-130T)	10437739	55A6A3
A5159	1	Valve, Manual	3/8 in., Bypass	Robbins PN NT-180	10437694	
A5160	1	Valve, Manual	3/8 in., Vent	Robbins PN NT-180	10437694	
A5161	1	Valve, Check	3/8 in., Cracking Pressure 4 psig max.	James, Pond, & Clark PN HP299T1-6TT	10430233-2	
A5162 through A5164 are not functionally applicable to this system.						
A5165	1	Valve, Manual	1/2 in.	Marotta PN 223143-3	75M51064-3	
A5166	1	Regulator, Manual	Reference Pressure 3000 psig Inlet 750 psig Outlet	Wallace O. Leonard PN 187040-2	75M50182	

FINDING NUMBER	NO. REQD	COMPONENT	REMARKS	VENDOR	DRAWING NUMBER	ELEC SYM
A5167	1	Regulator, Dome Loaded	Primary Regulator 3000 psig Inlet 750 psig Outlet	Grove Mod. 201B	75M01356-1	
A5168	1	Valve, Relief	Relief at 875 ±44 psig Reseat at 790 psig min.	Fluid Mechanics PN 2-847	10430216-3	
A5169						
A5170						
A5171	1	Valve, Manual	3/8 in., Vent	Robbins PN NT-180	10437694	
A5172	1	Valve, Check	3/8 in., Cracking Pressure 4 psig max.	James, Pond, & Clark PN HP299T1-6TT	10430233-2	
A5173	1	Valve, Shuttle	1/4 in.	Clary PN 524255	10434448	
A5174	1	Switch, Pressure	Actuates at 625 ±15 psig Deactuates at 40 psid max. Below Actuation Pressure	Southwestern Ind. Inc. PN PS5116-625	10434443-6	55A6A4
A5175						
A5176	1	Gage, Pressure	0 to 1000 psig-Range 750 psig-Normal Reading	Marsh PN 210-3SSFMH	75M50147-11	
A5177	1	Valve, Manual	3/4 in.	Marotta PN 223143-2	75M51064-2	
A5178	1	Valve, Manual	3/8 in., Vent	Robbins PN NT-180	10437694	

FINDING NUMBER	NO. REQD	COMPONENT	REMARKS	VENDOR	DRAWING NUMBER	ELEC SYM
A5179	1	Valve, Check	3/8 in., Cracking Pressure 4 psig GN_2	James, Pond, & Clark PN HP299T1-6TT	10430233-2	
A5180	1	Valve, Shuttle	1/4 in.	Clary PN 524255	10434448	
A5181	1	Switch, Pressure	Actuates at 625 ±15 psig Diff. Press. at 40 psi max.	Southwestern Ind. Inc. PN PS5116-625	10434443-6	55A6A16
A5182						
A5183	1	Gage, Pressure	0 to 1000 psig-Range 750 psig-Normal Reading	Marsh PN 210-3SSFMH	75M50147-11	
A5184						
A5185	1	Regulator, Manual	Reference Pressure 3000 psig Inlet 290 psig Outlet	Wallace O. Leonard PN 186740-2	75M50182	
A5186	1	Regulator, Dome Loaded	Primary Regulator 3000 psig Inlet 290 psig Outlet	Grove PN M12951N	75M02156-2	
A5187	1	Valve, Manual	3/8 in., Vent	Robbins PN NT-180	10437694	
A5188	1	Valve, Check	3/8 in., Cracking Pressure 4 psig max.	James, Pond, & Clark PN 299T1-6TB	75M50149-2	
A5189	1	Valve, Relief	Relief at 380 ±20 psig Reseat at 300 psig min.	James, Pond, & Clark PN 5159T1-6TT-380	75M02172-1	
A5190	1	Valve, Shuttle	1/4 in.	Clary PN 524255	10434448	

FINDING NUMBER	NO. REQD	COMPONENT	REMARKS	VENDOR	DRAWING NUMBER	ELEC SYM
A5191	1	Switch, Pressure	Actuates at 185 ±15 psig Diff. Press. at 30 psi max.	Southwestern Ind. Inc. PN PS5116-185	10434443-12	55A6A15
A5192						
A5193	1	Gage, Pressure	0 to 600 psig-Range 290 psig-Normal Reading	Marsh PN 210-CSFMH	75M50147-9	
A5194	1	Valve, Solenoid	N.C.	Marotta PN 212783-1 (MV-130T)	10437739	55A6A14
A5195						
A5196	1	Regulator, Manual	Reference Pressure 3000 psig Inlet 490 psig Outlet	Rocketdyne PN 553645	10437906-9	
A5197	1	Orifice	$.031^{+.002}_{-.001}$ in. dia.	Rocketdyne PN 9504-45062	10430000	
A5198	1	Valve, Solenoid	N.C., 3-way	Marotta PN 202873-113 (MV-74)	75M01351	55A6A5
A5199	1	Regulator, Dome Loaded	Primary Regulator 3000 psig Inlet 490 psig Outlet	Grove PN 10977A085B	75M50341-2	
A5200	1	Valve, Relief	Relief at 700 ±35 psig Reseat at 565 psig min.	Fluid Mechanics PN 2-922	10430216-11	
A5201						
A5202	1	Valve, Shuttle	1/4 in.	Clary PN 524255	10434448	

FINDING NUMBER	NO. REQD	COMPONENT	REMARKS	VENDOR	DRAWING NUMBER	ELEC SYM
A5203	1	Switch, Pressure	Actuates at 425 ±15 psig Max. Diff. Press. 35 psi	Southwestern Ind. Inc. PN PS5116-425	10434443-4	55A6A6
A5204						
A5205	1	Gage, Pressure	0 to 1000 psig-Range 490 psig-Normal Reading	Marsh PN 210-3SSFMH	75M50147-11	
A5206						
A5207						
A5208	1	Regulator, Manual	Reference Pressure 3000 psig Inlet 300 psig Outlet	Rocketdyne PN 553645	10437906-7	
A5209	1	Orifice	$.031^{+.002}_{-.001}$ in. dia.	Rocketdyne PN 9504-45062	10430000	
A5210	1	Valve, Solenoid	N.C., 3-way	Marotta PN 202873-113 (MV74)	75M01351	55A6A9
A5211	1	Regulator, Dome Loaded	Primary Regulator 3000 psig Inlet 300 psig Outlet	Grove PN 10977A085B	75M50341-1	
A5212	1	Valve, Relief	Relief at 530 ±30 psig Reseat at 430 psig min.	Fluid Mechanics PN 2-924	10430216-12	
A5213						
A5214	1	Valve, Shuttle	1/4 in.	Clary PN 524255	10434448	

FINDING NUMBER	NO. REQD	COMPONENT	REMARKS	VENDOR	DRAWING NUMBER	ELEC SYM
A5215	1	Switch, Pressure	Actuates at 310 ±15 psig Max. Diff. Press. 35 psid	Southwestern Ind. Inc. PN PS5116-310	10434443-13	55A6A10
A5216						
A5217	1	Gage, Pressure	0 to 800 psig-Range 300 psig-Normal Reading	Marsh PN 210-3SSFMH	75M50147-10	
A5218						
A5219						
A5220	1	Regulator, Manual	Reference Pressure 3000 psig Inlet 240 psig Outlet	Rocketdyne PN 553645	10437906-8	
A5221	1	Orifice	.031 $^{+.002}_{-.001}$ in. dia.	Rocketdyne PN 9504-45062	10430000	
A5222	1	Valve, Solenoid	N.C., 3-way	Marotta PN 202873-113 (MV74)	75M01351	55A6A11
A5223	1	Regulator, Dome Loaded	Primary Regulator 3000 psig Inlet 165 psig Outlet	Grove PN 10977A085B	75M50341-1	
A5224	1	Valve, Relief	Relief at 315 ±20 psig Reseat at 250 psig min.	Fluid Mechanics PN 2-921	10430216-13	
A5225						
A5226	1	Valve, Shuttle	1/4 in.	Clary PN 524255	10434448	

FINDING NUMBER	NO. REQD	COMPONENT	REMARKS	VENDOR	DRAWING NUMBER	ELEC SYM
A5227	1	Switch, Pressure	Actuates at 195 ±15 psig Max. Diff. Press. 30 psid	Southwestern Ind. Inc. PN 5116-195	10434443-14	55A6A12
A5228						
A5229	1	Gage, Pressure	0 to 600 psig-Range 240 psig-Normal Reading	Marsh PN 210-CSFMH	75M50147-9	
A5230						
A5231						
A5232	1	Regulator, Dome Loaded	3000 psig Inlet 240 psig Outlet	Grove PN M12951N	75M02156-2	
A5233	1	Gage, Pressure	0 to 600 psig-Range 240 psig-Normal Reading	Marsh PN 210-CSFMH	75M50147-9	
A5234	1	Valve, Solenoid	3/8 in. N.C.	Marotta PN 212783-1 (MV130T)	10437739	55A6A13
A5235						
A5236						
A5237	1	Filter	5 micron, 98.6% nominal	Bendix PN 041675	10434444-3	
A5238	1	Filter	5 micron, 98.6% nominal	Bendix PN 041675	10434444-3	

FINDING NUMBER	NO. REQD	COMPONENT	REMARKS	VENDOR	DRAWING NUMBER	ELEC SYM
A5239						
A5240						
A5241	1	Gage, Pressure	0 to 5000 psig-Range 3000 psig-Normal Reading	Marsh PN 210-3SSFMH	75M50147-15	
A5242	1	Valve, Manual	1 in., Shut-Off	Marotta SVP-29 PN 223774-1	75M51063-1	
A5243						
A5244	1	Regulator, Manual	Reference Pressure 3000 psig Inlet 315 psig Outlet	Wallace O. Leonard PN 187040-2	75M50182	
A5245	1	Regulator, Dome Loaded	Primary Regulator 3000 psig Inlet 315 psig Outlet	Grove PN 10988A066B	75M01356-1	
A5246	1	Valve, Relief	Relief at 140 ±7 psig Reseat at 130 psig min.	Fluid Mechanics PN 2-925	10430216-14	
A5247	1	Valve, Manual	3/8 in., Vent	Robbins PN NT-180	10437694	
A5248	1	Valve, Check	3/8 in., Cracking Pressure 4 psig max.	James, Pond, & Clark PN P299T1-6TB	75M50149-2	
A5249	1	Valve, Shuttle	1/4 in.	Clary PN 524255	10434448	
A5250	1	Switch, Pressure	Actuates at 300 ±15 psid Max. Diff. Press. 35 psid	Southwestern Ind. Inc. PN PS5116-185	10434443-12	55A6A20

FINDING NUMBER	NO. REQD	COMPONENT	REMARKS	VENDOR	DRAWING NUMBER	ELEC SYM
A5251						
A5252	1	Gage, Pressure	0 to 800 psig-Range 315 psig-Normal Reading	Marsh PN 210-3SSFMH	75M50147-10	
A5253						
A5254	1	Valve, Manual	1/2 in., Nitrogen Bypass	Marotta SPV-27 PN 223143-3	75M51064-3	
A5255	1	Manifold	2 in., Vent	Grayloc Tool Company	75M02102	
A5256 through A5266 are not functionally applicable to this system.						
A5267	1	Valve, Manual	3/8 in.	Robbins PN NT-180	10437694	
A5268	1	Valve, Manual	1/2 in.	Marotta SPV-27 PN 223143-3	75M51064-3	
A5269	1	Valve, Manual	3/8 in.	Robbins PN NT-180	10437694	
A5270	1	Regulator, Dome Loaded	Primary Regulator 3000 psig Inlet 750 psig Outlet	Grove PN M12951N	75M02156-2	
A5271	1	Regulator, Manual	Reference Pressure 3000 psig Inlet 750 psig Outlet	Wallace O. Leonard PN 187040-2	75M50182	
A5272	1	Valve, Manual	3/8 in., Vent	Robbins PN NT-180	10437694	

FINDING NUMBER	NO. REQD	COMPONENT	REMARKS	VENDOR	DRAWING NUMBER	ELEC SYM
A5273	1	Valve, Relief	Relief at 850 ±43 psig Reseat at 770 psig min.	James, Pond, & Clark PN 5159T1-6TT-1020	75M02172-3	
A5274	1	Valve, Shuttle	1/4 in.	Clary PN 524255	10434448	
A5275	1	Switch, Pressure	Actuates at 625 ±15 psig Max. Diff. Press. 35 psid	Southwestern Ind. Inc. PN PS5116-625	10434443-6	55A6A8
A5276						
A5277	1	Gage, Pressure	0 to 1500 psig-Range 750 psig-Normal Pressure	Marsh PN 210-3SSFMH	75M50147-12	
A5278						
A5279						
A5280	1	Regulator, Pressure	1/4 in., Inlet 3000 psig Outlet 450 ±20 psig	W. O. Leonard PN 128390-4	75M50726-2	
A5281	1	Gage, Pressure	0-800 psig-Range	Marsh PN 0-800, 210-3SSFMH	75M50147-10	
A5282 through A5286 are not functionally applicable to this system.						
A5287	1	Valve, Manual	1/4 in., Bypass	Cardair PN 3510-0083	75M51076-1	
A5288	1	Valve, Manual	1/4 in., Vent	Robbins PN SSNA 250-4T-787	75M01305-1	

FINDING NUMBER	NO. REQD	COMPONENT	REMARKS	VENDOR	DRAWING NUMBER	ELEC SYM
A5289	1	Valve, Manual	1/4 in., Shut-Off	Robbins PN SSNA 250-4T-787	75M01305-1	
A5290	1	Valve, Manual	1/4 in., Vent	Robbins PN SSNA 250-4T-787	75M01305-1	
A5291	1	Switch, Pressure		Custom PN 8G46	10430405	55A6A23
A5292	1	Valve, Manual	1/2 in., Bypass	Marotta SPV-27 PN 223143-3	75M51064-3	
A5293	1	Valve, Check	1/4 in.	James, Pond, & Clark PN 299T1-4TB	75M50149-1	
A5294	1	Valve, Check	1/4 in.	James, Pond, & Clark PN H299T1-4TT	10430233-1	
A5295						
A5296	1	Valve, Relief	1/4 in.	James, Pond, & Clark PN 5159T1-4TB-600	10430079-6	
A5297 through A5402 are not functionally applicable to this system.						
A5403	1	Valve, Shuttle	1/4 in., 3-way	Clary Dynamics PN 524255	10434448	
A5404						
A5405						

FINDING NUMBER	NO. REQD	COMPONENT	REMARKS	VENDOR	DRAWING NUMBER	ELEC SYM
A5406	1	Valve, Check	1/4 in., Cracks at 4 psig max.	James, Pond, & Clark PN H299T1-4TT	10430233-1	
A5407	1	Valve, Check	1/4 in., Cracks at 4 psig max.	James, Pond, & Clark PN H299T1-4TT	10430233-1	
A5408 through A5800 are not functionally applicable to this system.						
A5801	1	Valve, Manual		Robbins Aviation PN SSNA-375A-6T-768	75M01305-2	
A5802	1	Filter	3/8 in., 10-micron	Permanent Filter Corp. PN 10813	10437650	
A5803	1	Valve, Check	3/8 in., Cracking Pressure 3 psig max.	James, Pond, & Clark PN HP279T1-6TT	75M02676	
A5804	1	Valve, Manual	Vent	Robbins Aviation PN SSNA-250-4T-787	75M01305-1	
A5805	1	Calibrated Bleed			75M02048	
A5806	1	Accumulator	150 cu. in.		75M05639	
A5807	1	Gage, Pressure	0 to 1000 psig-Range		10437804	
A5808	1	Switch, Pressure	Actuates at 600 psig	Southwestern Ind. Inc. PN PS5116-600	10434443-10	57A258-A2A3
A5809	1	Cover Assembly, Q-Ball			50M32049	

FINDING NUMBER	NO. REQD	COMPONENT	REMARKS	VENDOR	DRAWING NUMBER	ELEC SYM
A5810	1	Valve, Solenoid	N.C., 3-way	Marotta MV123 PN 204424	10425701	57A258-A241
A5811	1	Regulator, Manual	750 psig inlet 30 psig outlet		75M50165-4	
A5812	1	Orifice			75M01779	
A5813	1	Calibrated Bleed			75M02048	
A5814	1	Valve, Check	Cracking Pressure .5-1.0 psig	James, Pond, & Clark PN 279T-6BB	10434518	
A5815	1	Gage, Pressure	0 to 50 psig - Range		10437803	
A5816	1	Accumulator	60 cu. in.		75M06197	
A5817	1	Valve Manual	Vent	Robbins Aviation PN SSNA-250-4T-787	75M01305-1	
A5818	1	Calibrated Bleed			75M02048	
A5819	1	Switch, Pressure	Actuates at 10 psig	Southwestern Ind. Inc. PN PS3704-10	10434297-2	57A258-A2A2
A5820						
A5821	1	Valve, Solenoid	N.C., 3-way	Marotta MV 123 PN 204424	10425701	57A258-A2A4
A5822	1	Retract Cylinder	2 in. dia., 48 in. length	Hannifin Co. Model No. CBB-HLS13	10427203	

FINDING NUMBER	NO. REQD	COMPONENT	REMARKS	VENDOR	DRAWING NUMBER	ELEC SYM
A5823	1	Orifice	.015 in. dia.		75M02852	
A5824 through A6057 are not functionally applicable to this system.						
A6058	1	Valve, Manual	Vent	Futurecraft PN 30416S	75M50161-9	
A6059	1	Valve, Check		James, Pond, & Clark PN H249T1-16TT	10430234-5	
A6060 through A6501 are not functionally applicable to this system.						
A6502	1	Coupling-Half, Quick Disconnect	240 psig GN_2	E.B. Wiggins Oil Tool Co. Inc. PN 6400R107A16	75M02214	
A6503	1	Coupling-Half, Quick Disconnect	3000 psig GN_2	E.B. Wiggins Oil Tool Co. Inc. PN 6400R107A20	75M02211	
A6504	1	Coupling-Half, Quick Disconnect	240 psig GN_2	E.B. Wiggins Oil Tool Co. Inc. PN 6400R107A16	75M02214	
A6505						
A6506	1	Orifice	.030 dia.		75M04165-2	
A6507 through A6602 are not functionally applicable to this system.						
A6603	1	Coupling-Half, Quick Disconnect	490 psig GN_2	E.B. Wiggins Oil Tool Co. Inc. PN 6400R109A6	75M02209	
A6604						

FINDING NUMBER	NO. REQD	COMPONENT	REMARKS	VENDOR	DRAWING NUMBER	ELEC SYM
A6605						
A6606	1	Orifice	.030 dia.		75M04165-2	
A6607						
A6608	1	Coupling-Half, Quick Disconnect	300 psig GN_2	E.B. Wiggins Oil Tool Co. Inc. PN 6400R107A16	75M02214	
A6609 through A6627 are not functionally applicable to this system.						
A6628	1	Orifice	.063 dia.		75M05177	
A6629 through B197 are not functionally applicable to this system.						
B198	1	Sphere			20M00937	
B199	1	Sphere			20M00935	
B200	1	Coupling-Half, Quick Disconnect	3/8 in., 3000 psig GN_2	E.B. Wiggins Oil Tool Co. Inc. PN 6005 R67A6	20M30140	
B201	1	Filter	3/8 in., 25 micron	Walter Kidde & Co. PN 840473	20M30127	
B202	1	Valve, Check	3/8 in.	James, Pond, & Clark PN P279T-6BB (L)	20M30124	
B203	1	Switch, Pressure	Actuates at 2835 ±100 psig Deactuates at 2600 psig	Southwestern Ind. Inc. PN PS 13800-2800	20M30130	9A52

FINDING NUMBER	NO. REQD	COMPONENT	REMARKS	VENDOR	DRAWING NUMBER	ELEC SYM
B204	1	Valve, Manual	1/4 in., 3-way	Benton Corp. PN B-17500	10414076	
B205	1	Sphere	3000 psig GN_2 1.0 cu. ft.	Bendix Aviation Corp. PN 19E-23-29UD	20M00837	
B206	1	Sphere	3000 psig GN_2 1.5 cu. ft.	Bendix Aviation Corp. PN 19E-23-12UD	20M00837	
B207	1	Valve, Solenoid	N.C., 5-port	Marotta Valve Corp. PN 213854	20M30131	9A51
B208	1	Filter	3/8 in., 25 micron	Walter Kidde & Co. PN 840473	20M30127	
B209	1	Regulator, Manual	3000 psig Inlet 750 psig Outlet	Rocketdyne PN 550278	20M30134	
B210	1	Valve, Relief	Relief at 950 ±50 psig Reseat at 845 psig min.	Rocketdyne PN 550435	20M30137	
B211	1	Manifold	750 psig GN_2		20M00878	
B212	1	Valve, Manual	1/4 in., 3-way	Benton Corp. PN B-17500	10414076	
B213	1	Switch, Pressure	Actuates at 625 ±25 psig Deactuates at 575 psig	Southwestern Ind. Inc. PN PS-5100A	20M30135	9A53
B214 through B216 are not functionally applicable to this system.						
B217-1	1	Valve, Solenoid	N.C.	Marotta PN 218263-113 (MV-74)	20M30128	9A25

FINDING NUMBER	NO. REQD	COMPONENT	REMARKS	VENDOR	DRAWING NUMBER	ELEC SYM
B217-2	1	Valve, Solenoid	N.C.	Marotta PN 218263-113 (MV-74)	20M30128	9A28
B217-3	1	Valve, Solenoid	N.C.	Marotta PN 218263-113 (MV-74)	20M30128	9A31
B217-4	1	Valve, Solenoid	N.C.	Marotta PN 218263-113 (MV-74)	20M30128	9A34
B217-5	1	Valve, Solenoid	N.C.	Marotta PN 218263-113 (MV-74)	20M30128	9A37
B217-6	1	Valve, Solenoid	N.C.	Marotta PN 218263-113 (MV-74)	20M30128	9A40
B217-7	1	Valve, Solenoid	N.C.	Marotta PN 218263-113 (MV-74)	20M30128	9A43
B217-8	1	Valve, Solenoid	N.C.	Marotta PN 218263-113 (MV-74)	20M30128	9A46
B218	8	Orifice	.046 $^{+.001}_{-.000}$ in. dia.		10414595	
B219	10	Orifice	.018 $^{+.002}_{-.000}$ in. dia.		20M00982	
B220	1	Valve, Solenoid	N.C.	Marotta PN 20593-12	20M30160	9A9
B221-1	8	Calorimeter Assembly			50M10311	
B221-2	1	Calorimeter Assembly			50M10353	

FINDING NUMBER	NO. REQD	COMPONENT	REMARKS	VENDOR	DRAWING NUMBER	ELEC SYM
B221-3	1	Calorimeter Assembly			50M10445	
B222						
B223	1	Valve, Solenoid	N.C., 2-way	Marotta PN 224613	20M30380	11A77
B224	1	Orifice	Camera Ejection		20M01022	
B225						
B226	1	Valve, Solenoid	5-way	Marotta PN 213854	20M30131	11A61
B227	1	Sphere	3000 psig GN_2 0.5 cu. ft.	Bendix PN 19E-23-3UD	10438154	
B228	1	Valve, Solenoid	N.C.	Marotta PN 225317-1	20M30171	11A62
B229	1	Manifold, Distributor	3000 psig GN_2		20M00921	
B230	1	Valve, Constant Flow	Inlet pressure; 450 ±20 psig Outlet pressure; 0 to 150 psig 1/4 in., Orifice	W. O. Leonard, Inc. PN 156070-2	20M30120	
B231	1	Valve, Check	3/4 in.	Marotta PN 204022 (CMV 12)	20M30132	
B232	2	Sphere, Triplex	3000 psig GN_2 3 cu. ft.	Bendix Aviation Corp. PN 19E-23-22VD	20M00936	

FINDING NUMBER	NO. REQD	COMPONENT	REMARKS	VENDOR	DRAWING NUMBER	ELEC SYM
B233	1	Valve, Solenoid	N.C.	Marotta PN 225317-1	20M30171	11A68
B234	1	Valve, Solenoid	N.C.	Marotta PN 225317-1	20M30171	11A69
B235	1	Manifold	3000 psig GN_2, Distributor		20M00906	
B236	1	Valve, Solenoid	N.C.	Marotta PN 225317-1	20M30171	11A70
B237	1	Valve, Solenoid	N.C.	Marotta PN 225317-1	20M30171	11A71
B238	1	Valve, Solenoid	N.C.	Marotta PN 225317-1	20M30171	11A72
B239	1	Valve, Solenoid	N.C.	Marotta PN 225317-1	20M30171	11A73
B240	1	Valve, Solenoid	N.C.	Marotta PN 225317-1	20M30171	11A74
B241	1	Valve, Solenoid	N.C.	Marotta PN 225317-1	20M30171	11A79
B242	1	Valve, Solenoid	N.C.	Marotta PN 225317-1	20M30171	11A80
B243	1	Sphere	3000 psig GN_2		20M00905	
B244 through B249 are not functionally applicable to this system.						
B250	1	Coupling-Half, Quick Disconnect	3000 psig GN_2	E.B. Wiggins Oil Tool Co. Inc. PN 6005R104A12	20M30133	

FINDING NUMBER	NO. REQD	COMPONENT	REMARKS	VENDOR	DRAWING NUMBER	ELEC SYM
B251	1	Filter	3/4 in.		20M30129	
B252	1	Valve, Check	3/4 in.	Marotta PN 204022 (CMV12)	20M30132	
B253	2	Sphere	3000 psig GN_2 20 cu. ft.		20M00414	
B254 through B256 are not functionally applicable to this system.						
B257	1	Valve, Manual	1/4 in., 3-way	Benton Corp. PN B17500	10414076	
B258	1	Switch, Pressure	Actuates at 2835 ±100 psig Deactuates at 2600 psig	Southwestern Ind. Inc. PN PS 3800-2800	20M30130	11A51
B259 through B399 are not functionally applicable to this system.						
B400	1	Coupling-Half, Quick Disconnect	1/4 in., 3000 psig helium	E.B. Wiggins Oil Tool Co. Inc. PN 6105R102A4	20M30389	
B401	1	Filter	3/8 in. 20 micron	Cosmic Fairchild PN 30474	20M30414	
B402	1	Valve, Check	1/4 in.	Wallace O. Leonard Inc. PN 155040-2	20M30339	
B403	1	Switch, Pressure	Actuates at 2835 ±100 psig Deactuates at 2600 psig	Southwestern Ind. PN PS 3800-2800	20M30130	11A52
B404	1	Valve, Manual	1/4 in.	Benton Corp. PN B-15600	10414087	

FINDING NUMBER	NO. REQD	COMPONENT	REMARKS	VENDOR	DRAWING NUMBER	ELEC SYM
B405	1	Bottle	3000 psig He 50 cu. in.	Airtite Products, Inc.	20M00449	
B406	1	Regulator, Preset	3000 psig Inlet 450 ±20 psig Outlet	Wallace O. Leonard PN 128390-2	20M30157	
B407						
B408	1	Valve, Solenoid Assy.	N.C., 2-way	Marotta PN 224613	20M30380	11A67
B409	1	Transducer, Δ P	±1 psid - Range 1/4 in.	Statham Instruments, Inc.	50M10201	10A540
B410	1	Transducer, Δ P	±1 psid - Range 1/4 in.	Statham Instruments, Inc.	50M10201	10A541
B411	1	Transducer, Δ P	±1 psid - Range 1/4 in.	Statham Instruments, Inc.	50M10201	10A406
B412	1	Transducer, Δ P	±1 psid - Range 1/4 in.	Statham Instruments, Inc.	50M10201	10A408
B413	1	Transducer, Δ P	±1 psid - Range 1/4 in.	Statham Instruments, Inc.	50M10201	10A538
B414	1	Transducer, Δ P	±1 psid - Range 1/4 in.	Statham Instruments, Inc.	50M10201	10A539
B415	1	Valve, Solenoid	N.C., 2-way	Marotta PN 224613	20M30380	11A66
B416	12	Valve, Constant Flow	1/4 in.	Wallace O. Leonard PN 156070-2	20M30120	

FINDING NUMBER	NO. REQD	COMPONENT	REMARKS	VENDOR	DRAWING NUMBER	ELEC SYM
B417	1	Regulator, Preset	3000 psig Inlet 450 ±20 psig Outlet	Wallace O. Leonard PN 128390-2	20M30157	
B418	2	Valve, Constant Flow	Inlet pressure; 450 ±20 psig Outlet pressure; 0 to 150 psig	Wallace O. Leonard PN 156070-2	20M30120	
B419	2	Valve, Check	1/4 in.	Wallace O. Leonard PN 155040-2	20M30339	
B420	2	Constant Flow Valve	Inlet Pressure; 3000 ±50 psig Outlet Pressure; 800 to 900 psig 1/4 in.	Wallace O. Leonard PN 156070-3	20M30383	
B421	1	Valve, Check	Inlet Pressure; 3000 ±50 psig Outlet Pressure; 800 to 900 psig	Wallace O. Leonard PN 155040-2	20M30339	
B422	1	Sphere, Triplex	3000 psig GN_2 3 cu. ft.		10438020	
B423 through E199 are not functionally applicable to this system.						
E200	1	Coupling-Half, Quick Disconnect	3000 psig Helium	DAC (Douglas Aircraft Co.) PN 7851823-503		
E201	1	Valve, Check		DAC PN 7851822-1		
E202	1	Sphere	3000 psig Helium 3.5 cu. ft.	DAC PN 7851820-1		
E203	1	Valve, Solenoid	N.C.	DAC PN 7851825-1		407W12L3
E204	1	Valve, Relief	Relief at 3250 ±150 psig Reseat at 3100 psig Approx.	DAC PN 7851824-501		

FINDING NUMBER	NO. REQD	COMPONENT	REMARKS	VENDOR	DRAWING NUMBER	ELEC SYM
E205	1	Filter	10 micron	DAC PN 7851840-1		
E206	1	Regulator, Manual	3000 ±100 psig Inlet 455 ±25 psig Outlet	DAC PN 7851821-501		
E207	1	Valve, Solenoid	N.O.	DAC PN 7851825-501		407W12L4
E208-1	1	Switch, Pressure	Actuates at 550 ±8 psig Deactuates at 510 ±10 psig	DAC PN 7851830-1		407W12S1
E208-2	1	Switch, Pressure	Actuates at 550 ±8 psig Deactuates at 510 ±10 psig	DAC PN 7851830-1		407W12S13
E209 through E216 are not functionally applicable to this system.						
E217	1	Valve, Check		DAC PN 7851822-1		
E218	1	Sphere	3000 psig Helium 1.5 cu. ft.	DAC PN 5693830		
E219	1	Switch, Pressure	Actuates at 2940 ±25 psig Deactuates at 2840 ±25 psig	DAC PN 7851830-503		407W12S5
E220	1	Switch, Pressure	Actuates at 445 ±5 psig Deactuates at 435 ±5 psig	DAC PN 7851830-501		407W12S4
E221 through E261 are not functionally applicable to this system.						
E262	1	Valve, Check		DAC PN 7851843-1		

FINDING NUMBER	NO. REQD	COMPONENT	REMARKS	VENDOR	DRAWING NUMBER	ELEC SYM
E263	1	Orifice	.037 in. dia.	Del Mfg. Co. PN R4-8		
E264	1	Valve, Solenoid	N.O.	DAC PN 1A22472-1		407W12L12
E265						
E266	1	Coupling-Half, Quick Disconnect	3000 psig Helium	DAC PN 1A22470-1		
E267	1	Orifice	.059 in. dia.	DAC PN S-4851838C8-084		
E268	6	Orifice	.055 in. dia.	DAC PN S-4851838C4-055		
E269						
E270						
E271	1	Sphere	Helium 424 cu. in.	DAC PN 1A58515-1		
E272	1	Coupling-Half, Quick Disconnect	3000 psig helium	DAC PN 1A22469-1		
E273 through E281 are not functionally applicable to this system.						
E282	1	Valve, Check		DAC PN 78511822-1		

FINDING NUMBER	NO. REQD	COMPONENT	REMARKS	VENDOR	DRAWING NUMBER	ELEC SYM
E283 through E314 are not functionally applicable to this system.						
E315	1	Switch, Pressure	Actuation at 2940 ±25 psig Deactuation at 2840 ±25 psig minimum	DAC PN 7851830-503		407W12S10
E316 through G499 are not functionally applicable to this system.						
G500	1	Coupling-Half, Quick Disconnect	3/8 in., 3000 psig GN_2	E. B. Wiggins Oil Tool Co. Inc. PN 6005R67A6	20M30140	
G501	1	Filter	3/8 in. 20 micron	Cosmic-Fairchild PN 30474	20M30414	
G502	1	Valve, Check	3/8 in.	James, Pond, & Clark PN P279T-6BB (L)	20M30124	
G503	1	Sphere	3000 psig GN_2 1 cu. ft.		20M00976	
G504	1	Valve, Manual	1/4 in., 3-Way	Benton Corp. PN B-17500	20M30436-1	
G505	1	Switch, Pressure	Actuation at 2835 ±100 psig Deactuation at 2600 psig min.	Southwestern Ind. Inc. PN PS 3800-2800	20M30130	801A10
G506	1	Switch, Pressure	Deactuation at 1375 ±33 psig Actuation at 70 psig Increase above Deactuation Pressure	Southwestern Ind. Inc. PN PS-3800-D1375	20M30159	80A12
G507	1	Regulator and Heater Assembly	300 to 3000 psig Inlet 10 to 30 ±.2 psig Outlet	Wallace O. Leonard PN 200400-2	20M30476-1	802A39
G508	1	Manifold Assembly	Operating Pressure 35 psig		20M01023-1	

FINDING NUMBER	NO. REQD	COMPONENT	REMARKS	VENDOR	DRAWING NUMBER	ELEC SYM
G509	1	Thermostat			10414079	
G510	1	Filter	3/8 in. 20 micron	Cosmic-Fairchild PN 30474	20M30414	
G511 through H7 are not functionally applicable to this system.						
H8	1	Q-Ball		Nortronics PN F-16	50M30645	
H9 and subsequent finding numbers are not functionally applicable to this system.						

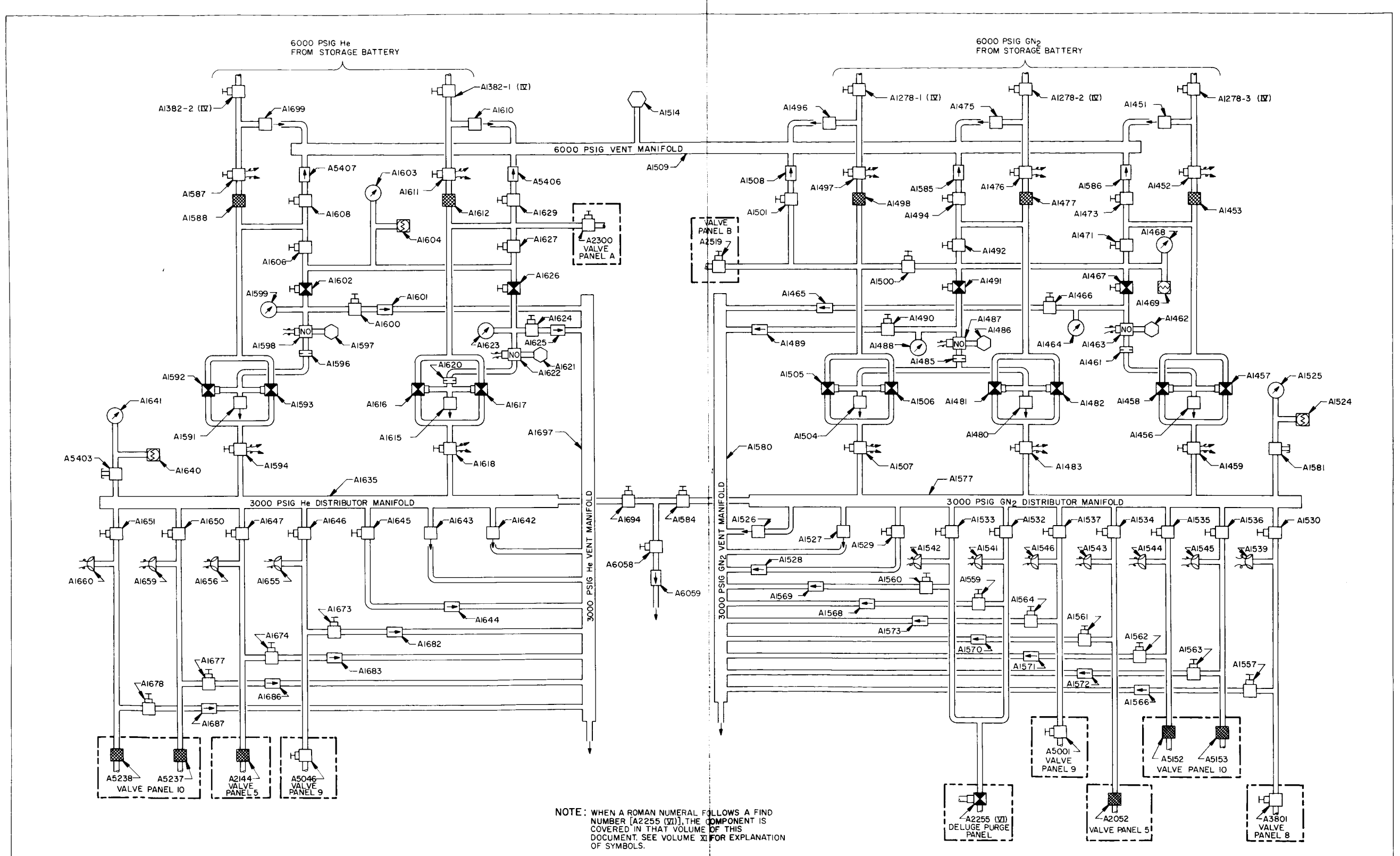

FIGURE 4. PNEUMATIC CONTROL DISTRIBUTOR

CSA 5050

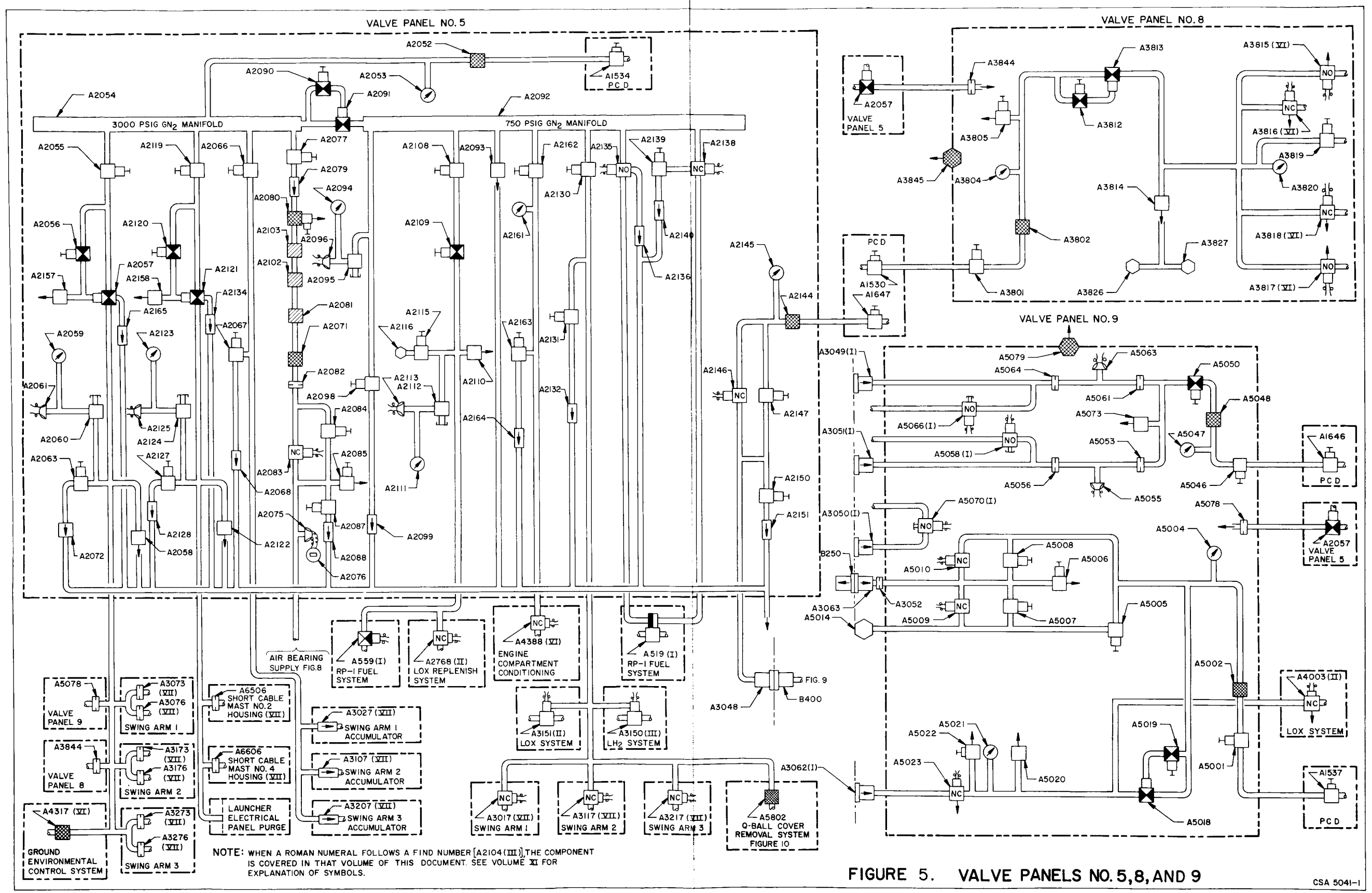

NOTE: WHEN A ROMAN NUMERAL FOLLOWS A FIND NUMBER [A2104(III)], THE COMPONENT IS COVERED IN THAT VOLUME OF THIS DOCUMENT. SEE VOLUME XI FOR EXPLANATION OF SYMBOLS.

FIGURE 5. VALVE PANELS NO. 5, 8, AND 9

CSA 5041-1

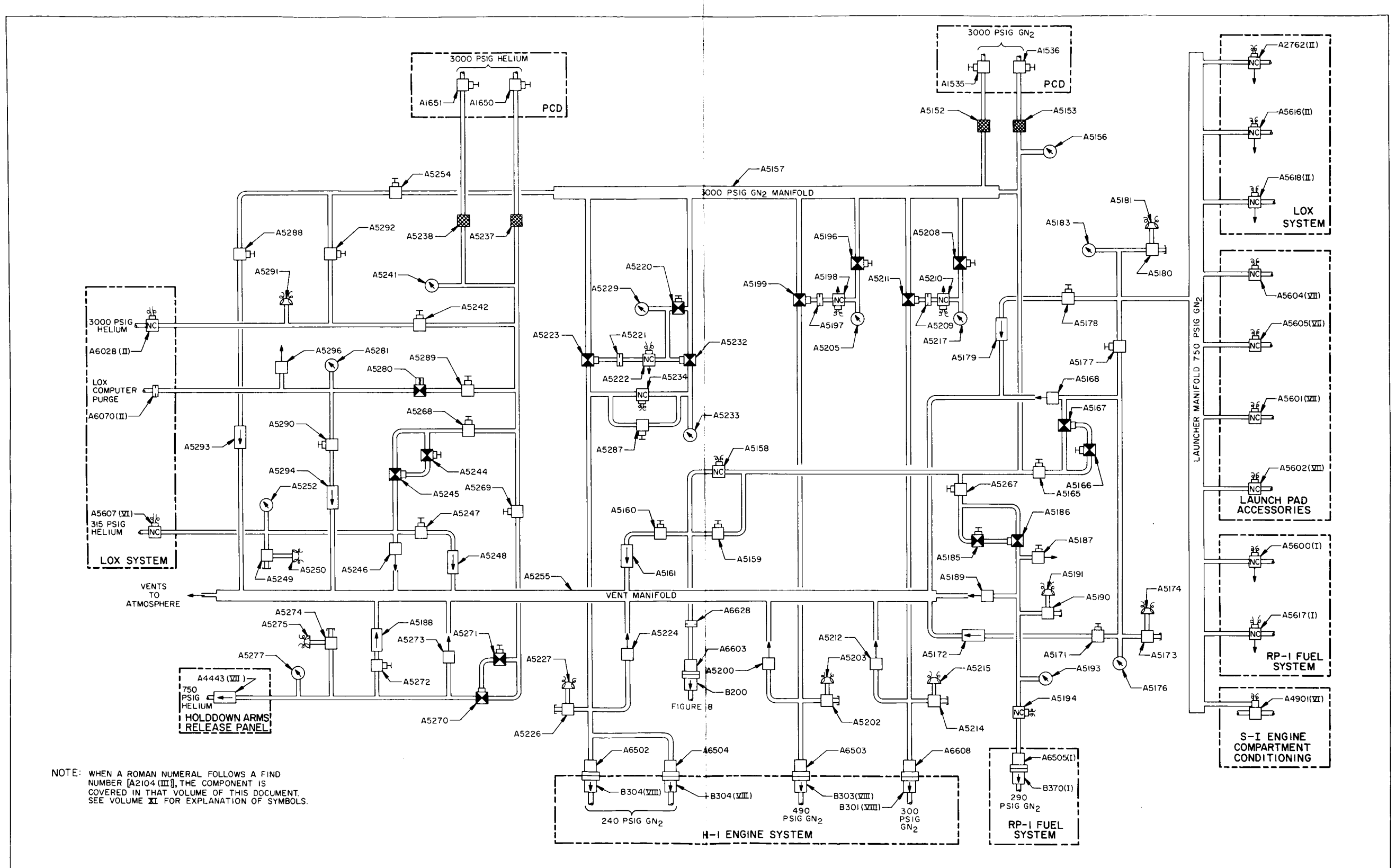

NOTE: WHEN A ROMAN NUMERAL FOLLOWS A FIND NUMBER [A2104 (III)], THE COMPONENT IS COVERED IN THAT VOLUME OF THIS DOCUMENT. SEE VOLUME XI FOR EXPLANATION OF SYMBOLS.

FIGURE 6. VALVE PANEL NO. 10 & LAUNCHER MANIFOLD

C-H 7100

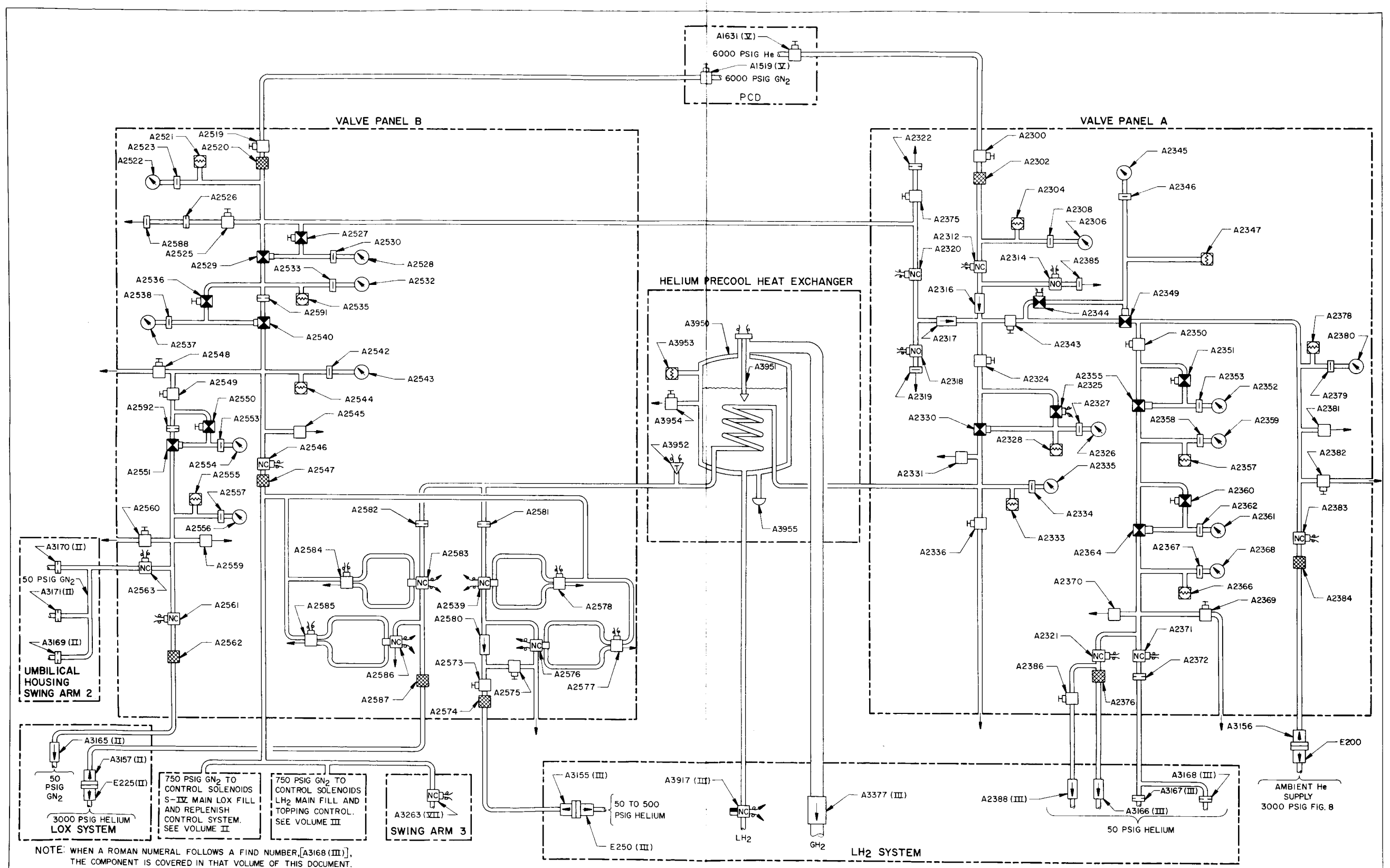

NOTE: WHEN A ROMAN NUMERAL FOLLOWS A FIND NUMBER, [A3168 (III)], THE COMPONENT IS COVERED IN THAT VOLUME OF THIS DOCUMENT. SEE VOLUME XI FOR EXPLANATION OF SYMBOLS.

FIGURE 7. VALVE PANELS A&B AND HELIUM PRECOOL HEAT EXCHANGER C-H 7105

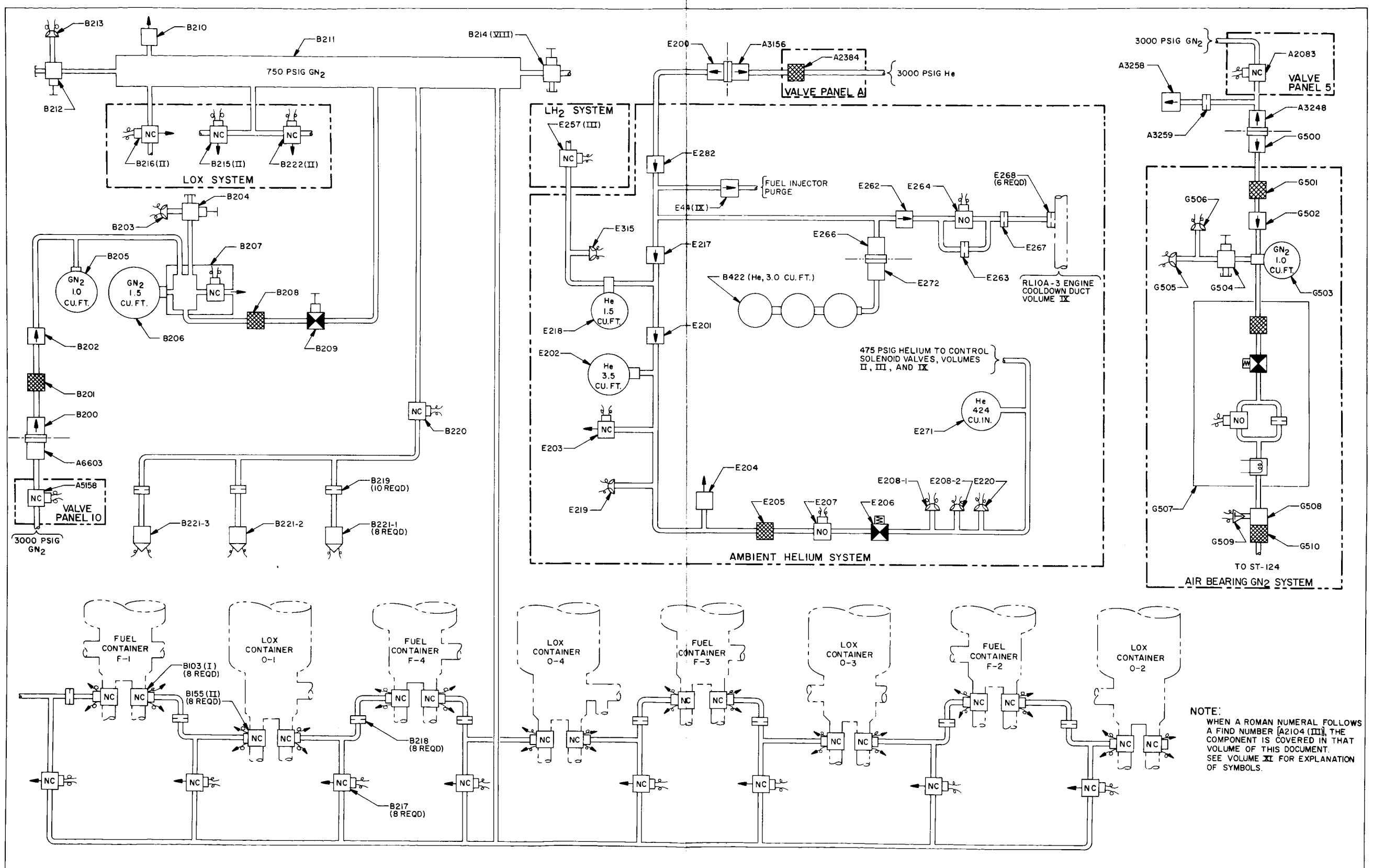

FIGURE 8. VEHICLE PNEUMATIC SYSTEMS

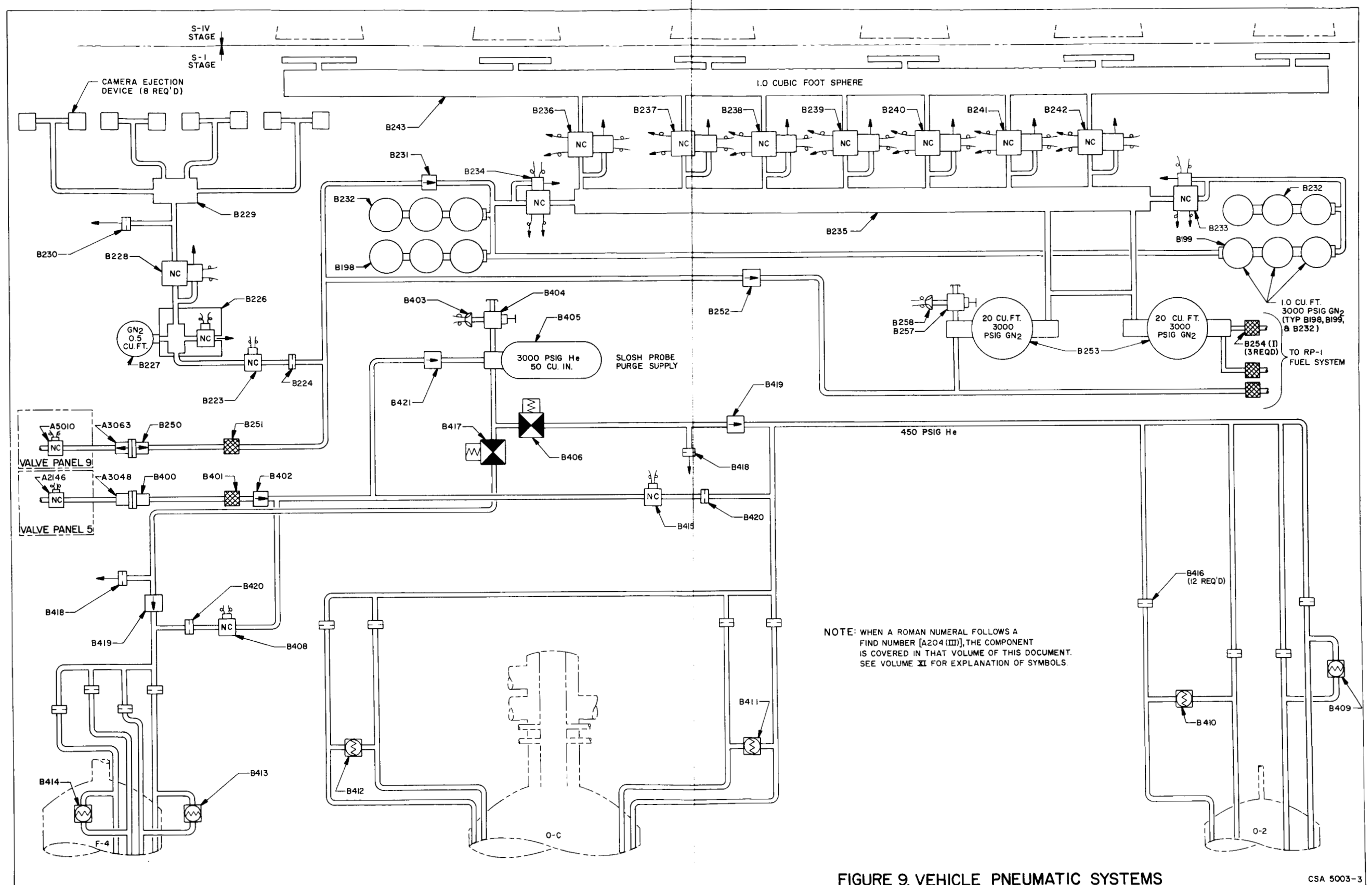

FIGURE 9. VEHICLE PNEUMATIC SYSTEMS

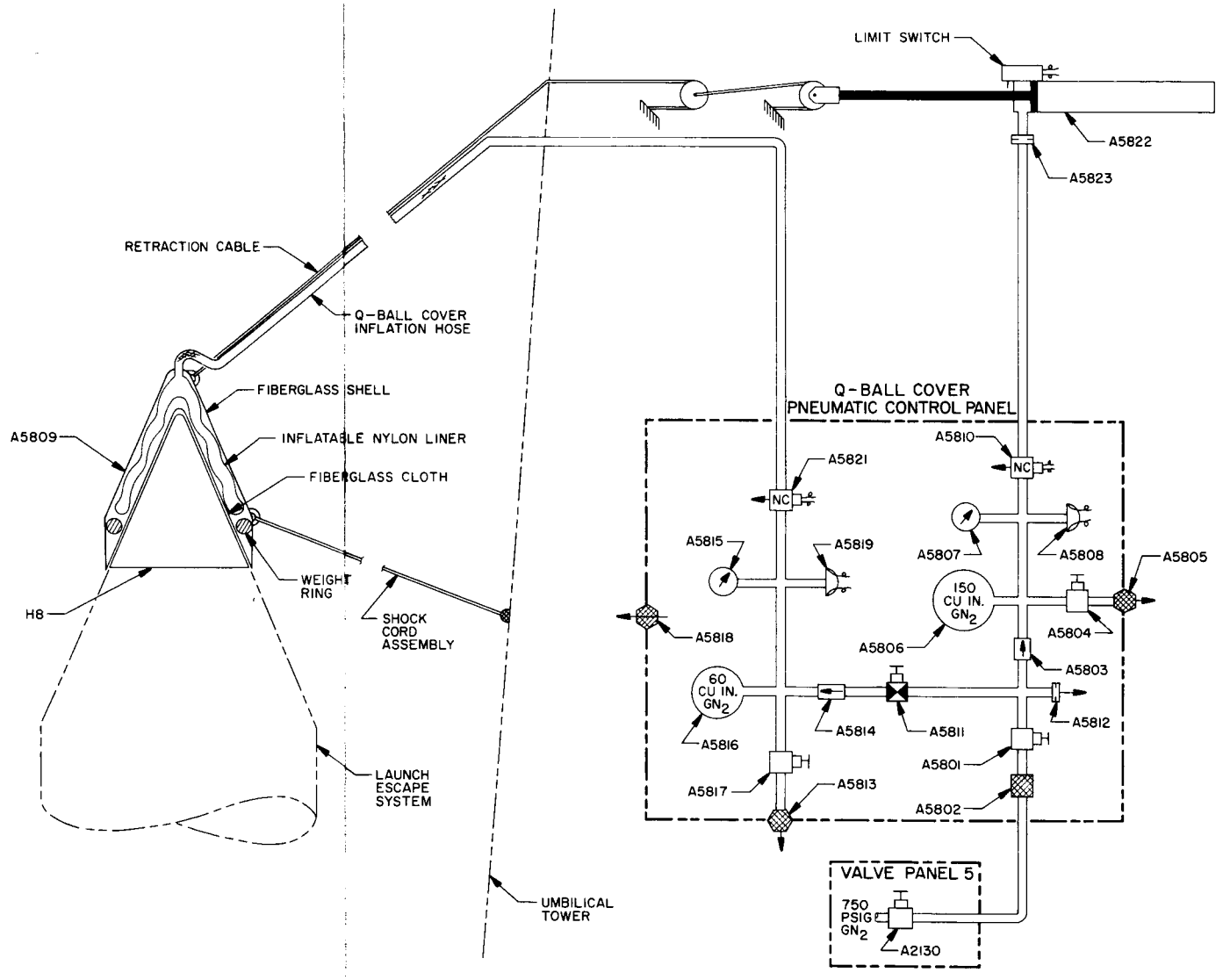

NOTE: WHEN A ROMAN NUMERAL FOLLOWS A FIND NUMBER [A2130(XI)], THE COMPONENT IS COVERED IN THAT VOLUME OF THIS DOCUMENT. SEE VOLUME XI FOR EXPLANATION OF SYMBOLS.

FIGURE 10. Q-BALL COVER REMOVAL SYSTEM

CSA 5049

DISTRIBUTION

CCSD-HO (Dept. 4600), BALFOUR, C.L. (10)
CCSD-NO (Dept. 2714), BEAMER, W. (14)
CCSD-NO (Dept. 2240), SIMMONS, F. (2)
DAC (Dept. A2-857), BELWOOD, H.
DAC, KEATING, J.
DAC, HOLLISTER, R. (Dept. A3-770)
I-I/IB-SI, CHAMBERS, J.
I-I/IB-SIV, FERGUSON, W.
I-I/IB-SIVH, LEAGUE, R.
I-I/IB-SIVL/DAC, STOOPS, G.
I-I/IB-SIVL-NASA/DAC-SACTO, TYSON, O.
I-I/IB-SIVL-NASA/DAC-SANTA MONICA, WEAVER, E.
I-MICH-OA, STEVENSON, H.
I-MICH-OA, QUINTON, H.
KN-BS27, WHISENANT, R.
KN-DA, POPPEL, T.
KN-DE2, HAHN, R.
KN-DE2, GRIFFIN, F.
KN-DE2, DZIADON, E. (2)
KN-DE2, REID, R.
KN-DE2, MOORE, R.
KN-DE2, STAHLEY, S.
KN-DE2, CHAPPLE, E.
KN-DE4, DOWNS, J.
KN-DE5, GRIFFIN, F.
KN-DF2, CAREY, T.
KN-DL2, BUCHANAN, D.
KN-DP2, MIMS, W.
KN-DP2, MINTON, C.
KN-DP2, SPARKMAN, O.
KN-DP2, WASILESKI, C.
KN-DP4, NELSON, R.
KN-DP5, WRIGHT, R.
KN-DR2, HOOKER, J. (5)
KN-DS232, BUNCH, M.
KN-ET, BRIDEWELL, C.
KN-FE, DODD, R. (2)
KN-AG, RUSSELL, L. (2)
KN-GT44, HAWKINS, G.
KN-L, GORMAN, R.
KN-LP2, SWEAT, C.
KN-M, PICKETT, A.
KN-P, PETRONE, R.
KN-PA, MATTHEWS, E.
KN-PC, BODY, R. (2)
KN-V, O'HARA, A.
KN-VG, RIGELL, I. (2)
KN-VG2, GREENFIELD, T.
KN-VG22, DOWLING, C. (4)
KN-VG23, ROUSE, C. (4)
KN-VL, GREENE, D. (5)
KN-VL, WHISENANT, E. (2)
KN-VM, PICKETT, A.
KN-VM2, ROBINSON, G.
KN-VM2, RAINWATER, W.
KN-VM3, PANTOLIANO, T. (3)
KN-VM22, DeLaROSA, H.
KN-VM22, FANNIN, L. (8)
KN-VM23, SCOVILLE, D.
KN-VM24, HILL, L.
LVO-DIR, WILLIAMS, M.
LVO-AD, ZEILER, A.
LVO-L, BELLAMY, E. (5)
R-ASTR-E, FICHTNER, H.
R-ASTR-EA, SMITH, R. (5)
R-ASTR-EAA, PASCHAL, L.
R-ASTR-ES, ADEN, R. (3)
R-ASTR-ESI, MILNER, R.
R-ASTR-I, HOBERG, O.
R-ASTR-IM, POWELL, J.
R-ASTR-TR, WAGNON, W.
R-ME-A, NOWAK, M.
R-P&VE-AV, NEIGHBORS, W.
R-P&VE/DAC, MEZO, C.
R-P&VE-PA, REED, K.
R-P&VE-PEM, HOLMES, J. (2)
R-P&VE-PM, FUHRMANN, H. (2)
R-P&VE-PP, HEUSINGER, B.
R-P&VE-PT, WOOD, C.
R-P&VE-V, PALAORO, H.
R-P&VE-VA, HOFFMAN, C.
R-P&VE-VAS, MOON, O.
R-P&VE-VF, ROTHE, K.
R-P&VE-VI, FAULKNER, W. (2)
R-P&VE-VK, BOONE, C.
R-P&VE-VM, BECK, M.
R-P&VE-VNW, DEVENISH, R. (5)
R-P&VE-VO, KISTLER, W. (20)
R-P&VE-VS, SCHULZE, W.
R-P&VE-VSA, PRASTHOFER, W.
R-P&VE-VSI, HURT, W. (2)
R-P&VE-VSI, KRAUS, G. (2)

DISTRIBUTION (Cont'd.)

R-P&VE-VSP, AKINS, J.
R-QUAL-A, URBANSKI, A. (2)
R-QUAL-AAA, CALDWELL, W.
R-QUAL-J, QUINN, C.
R-QUAL-P, BROOKS, C.
R-QUAL-PI, CONAWAY, J.
R-TEST-CF, FORBIS, M.
R-TEST-I, SIEBER, W.
R-TEST-S, DRISCOLL, D.

Please forward any suggested changes, additions, and corrections to the Applied Engineering Communications Section (4612), Chrysler Corporation, Space Division, Huntsville, Alabama.

COPY NO. _____

THIS BOOK CONTAINS _____ PAGES. ☐ ONE SIDE ONLY. ☐ BACK TO BACK

_____ PAGES HAVE BEEN LEFT INTENTIONALLY BLANK.

THIS BOOK WAS INSPECTED BY Shaw AND FOUND TO BE COMPLETE.

SPACE DIVISION CHRYSLER CORPORATION

HUNTSVILLE OPERATIONS