UNPUBLISHED PRELIMINARY DATA

THE EMISSION OF EXO-ELECTRONS FROM ALUMINUM DURING FATIGUE

FACILITY FORM 602

N65-21343
(ACCESSION NUMBER)

36
(PAGES)

CR-57918
(NASA CR OR TMX OR AD NUMBER)

(THRU)

1
(CODE)

26
(CATEGORY)

FINAL REPORT
1 September 1961 - 30 September 1963

Contract No. NASr-63(02)

M.R.I. Project No. 2553-P

GPO PRICE $ _____

OTS PRICE(S) $ _____

Hard copy (HC) $2.00

Microfiche (MF) .50

For

Office of Grants and Research Contracts
Attn: Code SC
National Aeronautics and Space Administration
Washington, D. C. 20546

MIDWEST RESEARCH INSTITUTE

THE EMISSION OF EXO-ELECTRONS FROM ALUMINUM DURING FATIGUE

by

J. C. Grosskreutz
David K. Benson

FINAL REPORT
1 September 1961 - 30 September 1963

Contract No. NASr-63(02)

M.R.I. Project No. 2553-P

For

Office of Grants and Research Contracts
Attn: Code SC
National Aeronautics and Space Administration
Washington, D. C. 20546

PREFACE

This report describes the research performed during the period 1 September 1961 - 30 September 1963, under Contract No. NASr-63(02), MRI Project No. 2553-P. The research was directed by Dr. J. C. Grosskreutz under the supervision of Dr. Sheldon L. Levy, Director, Mathematics and Physics Division, Midwest Research Institute. Mr. David K. Benson carried out and helped to plan much of the experimental work. Others who contributed to the project were Mr. Sidney Hamilton, autoradiographic techniques; Dr. Richard Connell and Mr. David Banner, hydrogen cleaning experiments; and Mr. Gordon Gross, who assisted in the interpretation of data.

Approved for:

MIDWEST RESEARCH INSTITUTE

Sheldon L. Levy, Director
Mathematics and Physics Division

25 October 1963

TABLE OF CONTENTS

	Page No.
Summary	1
I. Introduction	2
II. The Sources of Exo-Electrons in Deformed Aluminum	3
A. Background	3
B. Autoradiography of Fatigue Fracture in Aluminum	3
C. Direct Imaging of Exo-Electron Sources	4
III. Quantitative Measurement of Exo-Electrons from Deformed Aluminum	7
A. Background	7
B. Fatigue Deformation	7
C. Unidirectional Deformation	9
IV. Discussion and Conclusion	14
A. Sources	14
B. Magnitude of the Emission Rate	14
C. A Model for the Emission of Exo-Electrons from Aluminum	15
D. Conclusions	16
References	17
Appendix I - Solid-State Thin Film Exo-Electron Detectors	18
Appendix II - Electron Multiplier Background Current	22
Appendix III - Treatment of Oxide Coated Al with Atomic Hydrogen	25

LIST OF FIGURES

Figure No.	Title	Page No.
1	Surface of Fatigue Specimen Showing Grain Boundary Cracking, (a) Bright Field; (b) Dark Field; (c) Autoradiographic Film, Magnification as Shown. . . .	5
2	Simplified Cross-Section of Vacuum Fatigue Apparatus (1) Sample; (2) Electron Multiplier (or Direct Imaging Tube, 1P25);(3) Piezoelectric Crystal; (4) O-Ring Sliding Seal; (5) Magnetic Shield; (6) Dynamic Coil; and (7) Stationary Permanent Magnet	8
3	Block Diagram of Electron Detecting Circuit.	8
4	Electron Multiplier Counting Rate vs. Time Following the Beginning of Fatigue Test. Failure of Sample Occurred Between 8 and 9 Min.	10
5	Electron Multiplier Counting Rate vs. Time Following the Beginning of Fatigue Test. Failure of Sample Occurred After 800,000 Cycles.	10
6	Simplified Cross-Section of UHV Sample Chamber	12
7	Block Diagram of UHV System.	12
8	Current-Voltage Characteristics of Thin Film Multi-layer Devices Using Different Semiconductors	20
9	Current-Voltage Characteristics of a Thin Film Multi-layer Device for Different Oxide Layer Thicknesses.	20
10	Electron Multiplier Background Current vs. Pressure (Vac-Ion Pump On).	24
11	Schematic Diagram of Apparatus for Cleaning Oxide Layer from Aluminum.	27
12	Sample Temperature vs. Time During Hydrogen Cleaning Experiments.	30

SUMMARY

21343

The details of exo-electron emission from fatiguing aluminum have been observed. Autoradiographic experiments indicated that the exo-electrons originate in slip bands and in freshly exposed crack surface. Direct imaging of these sources in vacuum with a 1P25 imaging tube failed because of the extremely low intensity of exo-electrons. Exo-electrons emitted during fatigue stressing at 2×10^{-5} Torr were detected directly with an electron multiplier. The intensity is very low, being only a few per cent above the background current of the detector. To investigate further the effects of environmental gases on exo-electron emission, experiments were performed in tension at 10^{-9} and 10^{-6} Torr, again using electron multiplier detection. Sensitivity problems prevented the primary objectives, but an upper limit to the emission rate was established to be $\sim$100 electrons/cm^2 sec at 10^{-6} Torr. This value agrees with earlier work on evaporated aluminum if one assumes that emission occurs only at slip bands. The evidence thus favors the view that exo-electrons are emitted from freshly exposed surface during deformation and that the process of oxidation is necessary for prompt emission. In view of the very low intensity of exo-electron emission during fatigue and the necessity of oxygen, it does not appear feasible at this time to apply the results to a means of monitoring fatigue damage.

Author

I. INTRODUCTION

The emission of electrons from the surfaces of cold-worked metals was first reported by Kramer[1] in 1950. Because he believed the emission to result from certain exothermal processes at the metal surface, Kramer called these electrons, "exo-electrons." Surveys of subsequent exo-electron research have been published by Grunberg and Wright[2] and by Bohun.[3] Two specific results are pertinent to the study to be reported here.

First, the intensity of "exo-emission" is proportional to the amount of prior cold work. Von Voss and Brotzen[4] found this proportionality to hold for aluminum under tensile stress, with the emission becoming significant for strains larger than 3 per cent. Second, there is good reason to suppose that exo-electrons originate in surface slip bands. Meleka and Barr[5] offer indirect evidence for this mechanism in the form of a Russell effect[6] experiment. Fine grain autoradiographic film was wrapped around a tensile-test specimen of zinc and developed after an exposure of several hours. A perfect image of the surface slip bands was obtained, a result which was explained in terms of exo-electron emission from these sites. These two results suggest that exo-electron intensity should be a good measure of cumulative plastic strain.

An obvious application of the exo-electron phenomenon becomes apparent when one recalls that the majority of fatigue fractures begin in surface slip bands. As these slip bands widen and deepen under additional straining, the crack grows and propagates along the surface from one slip band to another. The accumulation of such slip band deformation ought to be accompanied by a proportionate increase in exo-electron emission if the above results have been given the proper interpretation.

The research described in this report had its genesis in the hope that the emission of exo-electrons during fatigue might prove to be a good monitor of the extent of fatigue damage. However, several questions remained to be answered. For example, feasibility would hinge on the correctness of the slip band emission hypothesis and on the magnitude of exo-emission during fatigue. Also, the effect of environmental conditions on emission rate would be important. Such conditions would include surface layers as well as atmospheric content. Methods of detection should also be explored. Part of this report describes in detail our attempts to answer these questions in an unambiguous manner. Such an approach has required, in some cases, the use of exotic vacuum (10^{-9} Torr) conditions to delineate the effects of environment.

Our results have shown that the magnitude of exo-electron emission is so small that their use as a fatigue monitor is questionable at the present time. We have therefore not attempted to develop the original monitoring objective in this report, but rather have devoted our effort to a description and discussion of the mechanisms and sources of exo-electron emission during fatigue, a subject hitherto unexplored. Three Appendixes describe some related work of interest. The first is concerned with solid state electron collector devices, and the third with a method for producing atomically clean surfaces of aluminum. This method may also have significance for the broad field of space research. The second Appendix deals with a curious dependence of electron multiplier dark current on pressure.

II. THE SOURCES OF EXO-ELECTRONS IN DEFORMED ALUMINUM

A. Background

Except for the indirect evidence of Meleka and Barr,[5] there does not exist substantial experimental proof that exo-electrons originate in slip bands. There is some support for this view, however, in the evidence put forward by Wüstenhagen[7] and by Lohff[8] which indicates that exo-electron emission accompanies, or results from, the oxidation of fresh metal surfaces. These workers found that the emission from freshly evaporated or abraded surfaces of Al depended strongly on the oxygen pressure and fell below the background counting rate at 4×10^{-7} Torr. Since metals under tension or fatigue loading form new surface at slip bands, it is reasonable to suppose that these bands should be the sites of exo-electron emission.

We have attempted to further substantiate this claim for fatigued aluminum both with a Russell effect experiment, and with a direct imaging experiment.

B. Autoradiography of Fatigue Fracture in Aluminum[9]

The ability of fresh metal surfaces to blacken a photographic film, known as the Russell effect,[6] was first noticed 120 years ago by Moser.[10] In the years following Russell's extensive researches, it was generally agreed[11] that hydrogen peroxide, forming on the fresh surface in the presence of water vapor, was responsible for developing the latent image. Grunberg[12] proposed that exo-electrons emitted from the metal surfaces were responsible for the reaction leading to the formation of H_2O_2. As we have already noted, Meleka and Barr,[5] used a fine grain autoradiographic stripping emulsion (Kodak AR.10) to show that the Russell effect was concentrated in the surface slip bands of statically strained zinc single crystals. Thus, on the basis

of Grunberg's hypothesis, they concluded that the emission of exo-electrons from zinc originates in slip bands. This section of our report gives similar evidence for the case of fatigued aluminum and shows that fatigue cracks are especially effective in producing the Russell effect.

Flat strips of 99.99 per cent polycrystalline Al were fatigued in push-pull at constant strain (± 0.002) for 50,000 cycles (approximately 10 per cent of expected life). After cycling, the samples were quickly removed to a darkroom and previously prepared stripping emulsion was picked up wet onto the surface of the samples (under a Wratten series 1 safelight) and allowed to dry at room temperature. Exposure times of 18 hr. in total darkness were found convenient, although a detectable image could be obtained in 2 hr. After exposure, the emulsion was processed and allowed to dry while still in contact with the metal sample. The dry emulsion was then stripped from the metal, refloated on water, and picked up on a 1 x 3 in. glass slide. After drying again, the emulsion could be examined under a microscope.

Figure 1(c) is a typical example of the image produced. Comparison with the metal surface itself (Figs. 1(a) and (b)) shows the photographic image to be a faithful replica of the slip band and crack structure induced by fatigue stressing. In fact, the crack detail obtained on the stripping emulsion is superior to that of the conventional photomicrographs mainly because the extraneous scattering of light by surface contours is not present.

The importance to the emission process of incident light on the deforming surface was tested by wrapping one set of specimens in black paper prior to cycling. With the exception of an exposure of approximately 1 min. to the red safelight while applying the wet emulsion, the experiment was carried out in total darkness. There was no significant difference in the intensity of the images produced over those obtained with the cycling performed under ambient light conditions.

If one assumes the Grunberg hypothesis concerning the role of exo-electrons in H_2O_2 formation, it is clear that fatigue stressing not only produces highly localized exo-electron emission in slip bands, but results in a copious emission from fatigue cracks in their early stages. Both of these observations show the importance of freshly exposed surface to the mechanism of the exo-electron emission produced by plastic deformation.

C. Direct Imaging of Exo-Electron Sources

In showing that fatigue cracks are especially effective in producing the Russell effect we have strong evidence for the hypothesis that exo-electrons can be sensitive indicators for the process of fatigue fracture.

(a)

(b)

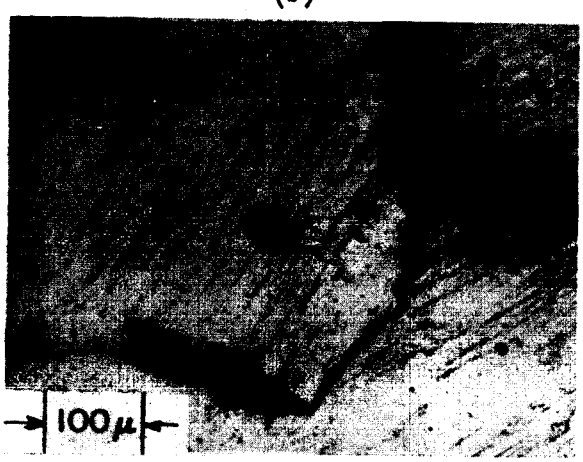

(c)

Fig. 1 - Surface of Fatigue Specimen Showing Grain Boundary Cracking (a) Bright Field; (b) Dark Field; (c) Autoradiographic Film Magnification as Shown

It remains, however, to bridge the gap between the Russell effect and the Grunberg hypothesis which states that this effect is due to the emission of exo-electrons. In other words, a definitive experiment is needed to show directly that exo-electrons are emitted preferentially from slip bands and fatigue cracks. An existing fatigue tester, capable of driving a small sheet specimen in a vacuum of $\sim 5 \times 10^{-5}$ Torr, was modified for this experiment. Provision was made to view the sample with a "snooper-scope" image converter tube (1P25), Fig. 2, p. 8. The infrared sensor is replaced by the exo-electron emitting sample. An image of the emission sources will then be formed on the collecting screen of the snooper-scope and, if the Grunberg hypothesis is correct, a slip band and fatigue crack image should be obtained similar to Fig. 1(c).

To test the imaging abilities of the 1P25 phototube, the fatigue sample was first replaced with a hot wire filament. Thermionic electrons from this filament were then collected by the imaging tube and focused onto a phosphor screen. The "best" settings of the focusing controls were recorded; it was also found that a grounded guard electrode placed in the object plane improved the image significantly.

After calibration and test, the hot wire filament was removed and the aluminum fatigue sample put back in place. The grounded guard electrode was kept in position, and the phosphor collector screen was replaced with an electron sensitive photographic film. The sample was then cycled at $\sim$400 cps under constant stress with the 1P25 tube energized.

Most commercially-available, electron-sensitive films are coated with an anti-abrasive gelatin which is too thick to allow penetration by the 2 kev electrons produced by the imaging tube. Therefore an AR.10 stripping emulsion (which has no surface coating) was tried, but no detectable image was obtained after 3.5 million cycles of stress which produced fatigue failure of the sample. Subsequent examination of the fractured sample showed extensive slip band development over the surface. If these bands are exo-electron sources, then the conditions were certainly satisfied for recording their image. The failure to obtain an image must be attributed therefore to the relatively slow speed of the AR.10 emulsion, and a small intensity of exo-electrons.

Another series of runs was made using Kodak SWR vacuum ultraviolet film which does not have an anti-abrasive coating and is more sensitive than the AR.10. Although samples whose fatigue lives ranged from 10^5 to 2×10^6 cycles were investigated, no detectable image was obtained. Finally, in an attempt to increase the speed of the detecting films, a zinc sulphide phosphor was placed over a piece of Tri-X film and the combination placed in the detecting position. The result of this experiment was also negative. The significance of these results is discussed in Section IV.

III. QUANTITATIVE MEASUREMENT OF EXO-ELECTRONS FROM DEFORMED ALUMINUM

A. Background

In the past, much of the quantitative measurement of exo-electron intensities has been made with Geiger counters. There are two disadvantages with this technique which make the results somewhat suspect and difficult to interpret. First, with the voltages used on these counters, a rather strong electric field can exist at the surface of the sample to be investigated. Cold emission, ionization, and other field-induced processes therefore contribute to the observed effects. Second, the sample is immersed in the filling gas of the Geiger tube, an inert gas plus a quenching agent such as methane. There is usually no attempt to reduce the oxygen impurity content of these gases, and consequently, the important effects of environment cannot be studied.

Both of these disadvantages can be avoided if an electron multiplier is used as a detector. The multiplier and sample should be arranged as integral parts of the same vacuum system. A line-of-sight path is necessary between the sample and the first dynode, and a small accelerating potential, $\sim$ 250 v., should exist on the first dynode so that all of the exo-electrons are collected.* In the experiments to be described in this section, electron multiplier detection was used exclusively.

Two measurements have been carried out. First, the exo-electron emission from aluminum during fatigue has been measured. The extremely small intensities which were recorded suggested additional experiments to determine the influence of environment and the precise mechanisms of emission. These experiments were performed under ultra-high vacuum conditions necessitating unidirectional straining rather than fatigue.

B. Fatigue Deformation

The experimental setup shown in Fig. 2 was used except that the 1P25 tube was replaced with a Dumont 14-stage electron multiplier having a current gain of $\sim 10^6$. Electronic circuitry is shown in Fig. 3.

---

* Exo-electrons are emitted with very low energies, $\sim$0.2 ev.

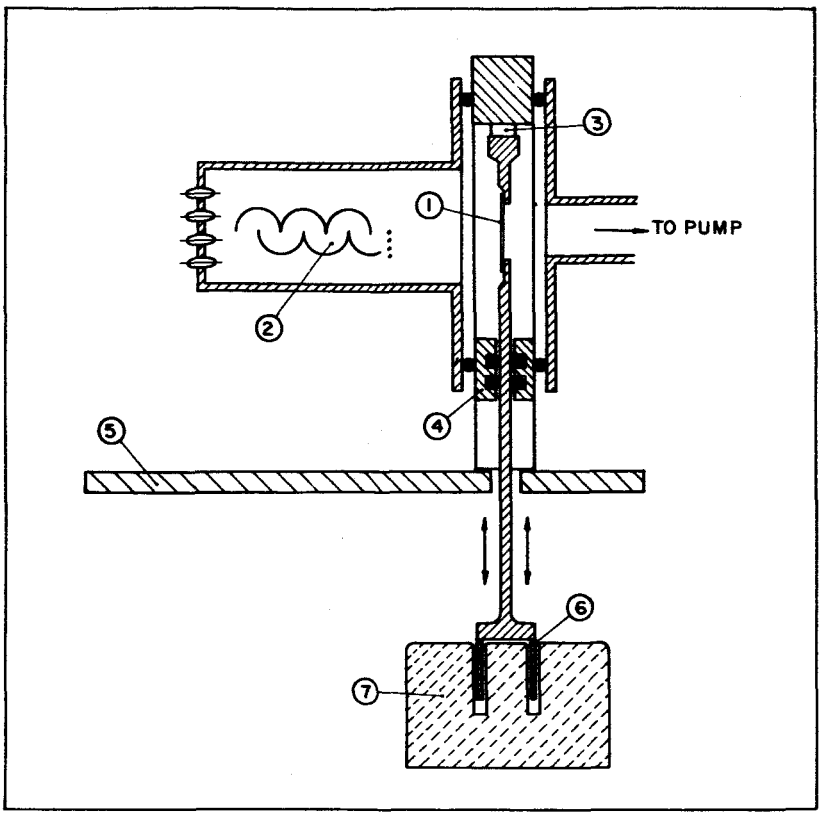

Fig. 2 - Simplified Cross-Section of Vacuum Fatigue Apparatus (1) Sample; (2) Electron Multiplier (or Direct Imaging Tube, 1P25); (3) Piezoelectric Crystal; (4) O-Ring Sliding Seal; (5) Magnetic Shield; (6) Dynamic Coil; and (7) Stationary Permanent Magnet

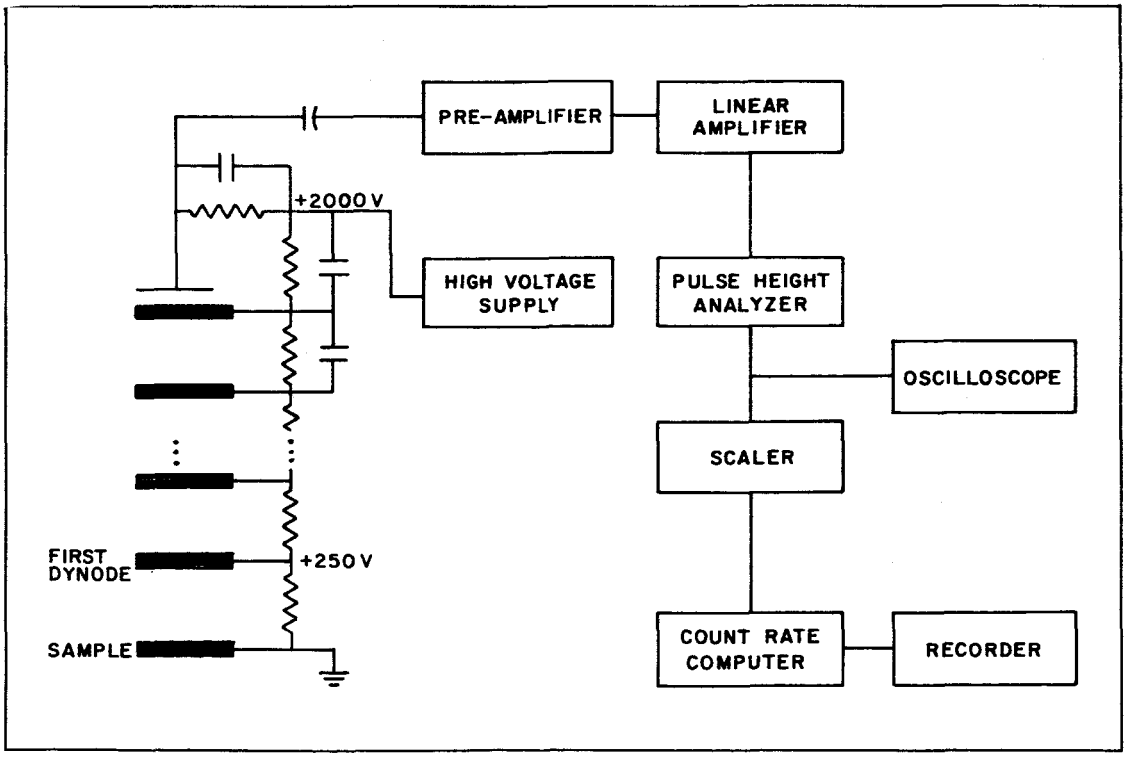

Fig. 3 - Block Diagram of Electron Detecting Circuit

Because the inherent noise of the multiplier and associated circuit components seriously hampered the measurements, the pulse height analyzer was used as a selective filter, passing only pulses within a given voltage range. This effectively reduced the noise, making possible the detection of exo-electron emission rates that were less than the total background count rate. However, the precise exo-electron emission rate could not be determined.

Several 2S and pure aluminum samples were fatigued until fracture with the electron multiplier as a detector. The sample was in complete darkness. Figure 4 shows the results of the first such measurement. The count rate is quite low because only a narrow portion of the pulse spectrum was monitored. Figure 5 is a subsequent measurement with a higher signal-to-noise ratio obtained by filtering the last stages of the electron multiplier and carefully selecting the bandpass of the pulse height analyzer. These experiments were all performed at pressures of 2 to 5 x 10^{-5} Torr. They are only semiquantitative. A reasonable correlation of exo-electron emission with the development of slip and fracture is demonstrated, however.

An attempt was made to improve the working vacuum, in order to check the effect of oxygen on exo-electron emission. The oil diffusion pump was replaced with a "Vac-ion" titanium sputter pump. The neoprene O-rings of the system were also replaced with duPont Viton O-rings which have a lower vapor pressure. The vacuum was still limited, however, to 5 x 10^{-6} Torr by other high vapor-pressure materials in the original apparatus and by a leak around the sample-driving plunger. Measurements in this modified system were masked by an increase of noise current with pressure. As the sample fatigued and slipped, the travel of the driving plunger increased and so did the leak rate around it. It was impossible to separate the pressure effect from the exo-electron emission. This annoying increase of noise with pressure was also observed in the high vacuum experiments described in the next section. An explanation is given in Appendix II. It is shown that the phenomenon is caused by the Vac-ion pump. It, therefore, did not influence the previous measurements.

C. Unidirectional Deformation

Although the evidence is strong[7,8] for an oxidation theory of exo-electron emission, some investigators[2] suggest that strain alone can cause measurable exo-electron emission either from the oxide or the metal itself. The extremely small exo-electron intensity recorded during fatigue does not settle this point, since enough oxygen is present at 10^{-5} Torr to oxidize the slip steps. Furthermore, if any application of the fatigue results are to be made to actual structures, it is imperative to know precisely the effects of enivronment. Unidirectional straining was chosen for this experiment to avoid the complications of coupling an alternating strain into ultra-high vacuum chambers.

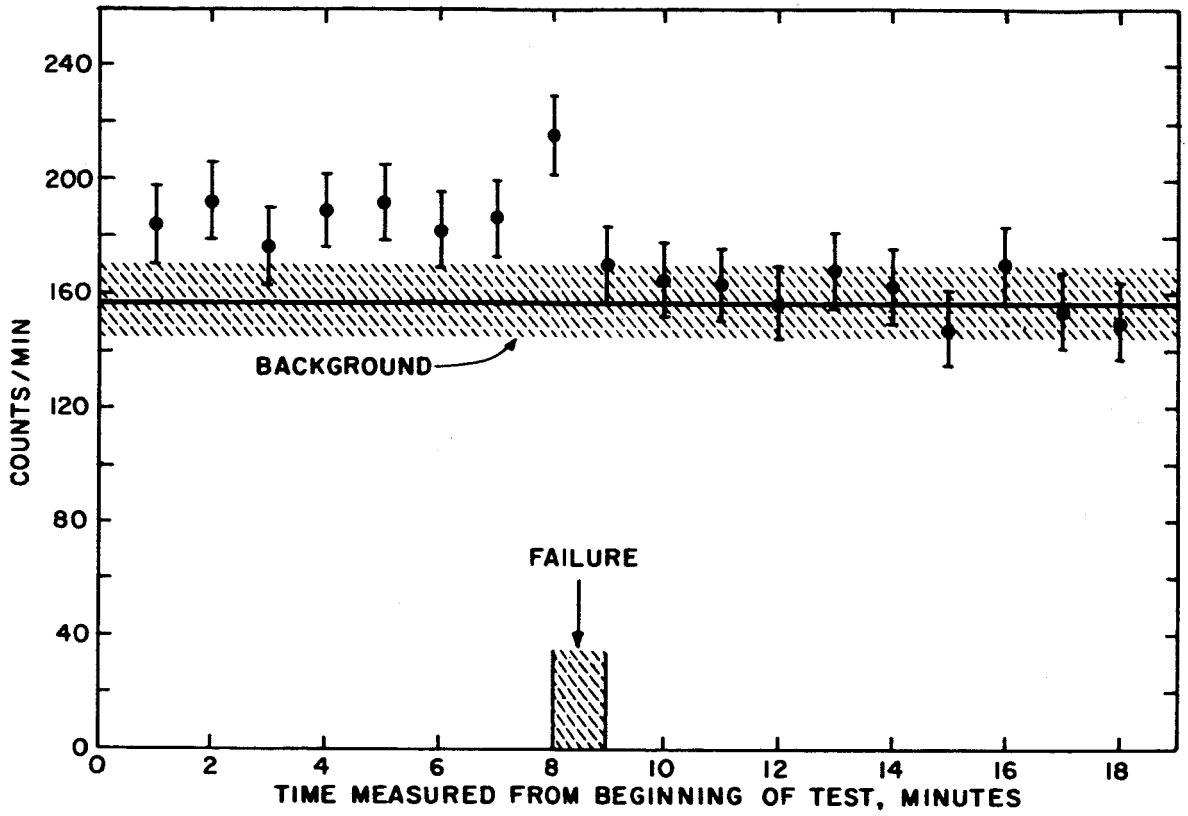

Fig. 4 - Electron Multiplier Counting Rate vs. Time Following the Beginning of Fatigue Test. Failure of Sample Occurred Between 8 and 9 min.

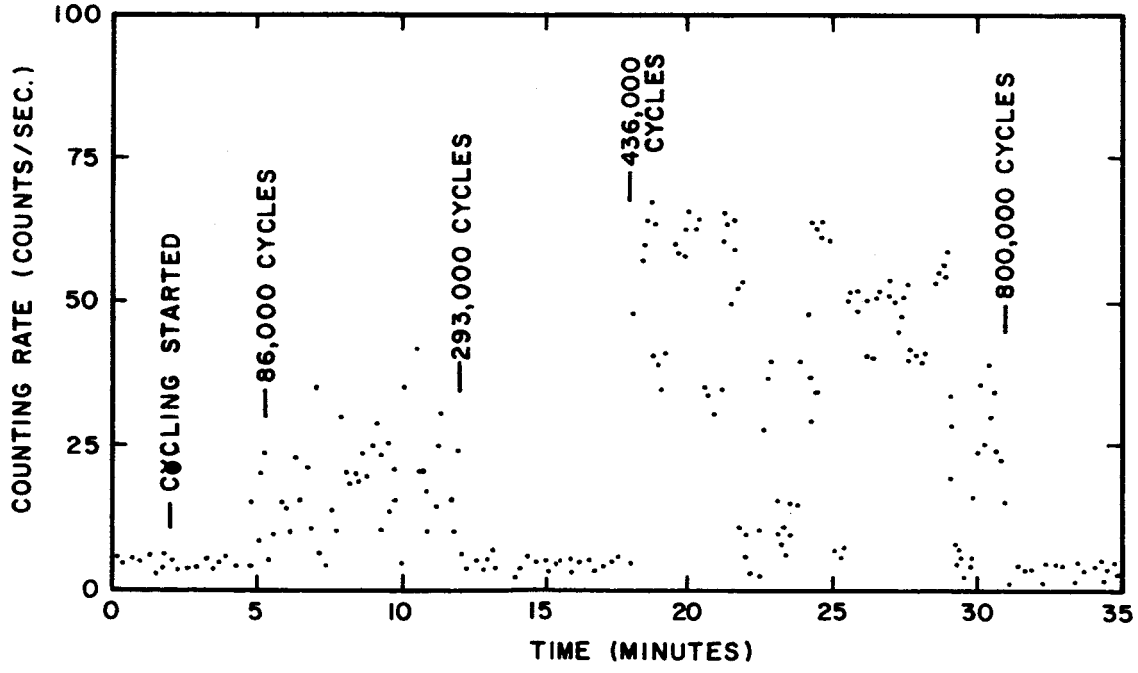

Fig. 5 - Electron Multiplier Counting Rate vs. Time Following the Beginning of Fatigue Test. Failure of Sample Occurred After 800,000 Cycles

A critical experiment was set up to determine: (a) if exo-electrons could be produced by strain alone; and (b) how the magnitude of such emission compares with that of chemical origin. The experiment consists of three steps:

1. An aluminum sample with an oxide coating is strained in a vacuum of 10^{-9} Torr. The amount of strain is adjusted to keep the oxide coating intact.

2. The sample is then strained so as to break the oxide and expose a given area of new surface.

3. The same procedure is followed at a pressure of 10^{-6} Torr. An electron multiplier is used to detect any electrons emitted during the experiments.

If (1) causes emission, then we can conclude that sites in the oxide layer contribute the electrons and their emission is activated by strain alone. On the other hand, if (1) causes no emission, but (2) does, then we would know that a new surface of either oxide or metal were necessary. Finally, if only step (2) performed at 10^{-6} Torr causes electron emission, the oxidation of new surface would be shown necessary. The results, as described below, were disappointing because exo-electron emission was not detected under any of these conditions.

The sample chamber, the vacuum system, and the detection circuit are illustrated in Figs. 6, 7, and 3, respectively. Provision is made so that light may fall on the sample surface if desired. A thermionic emitter is incorporated into the sample chamber and used to calibrate the detection system. Thermal electrons from the warm filament were readily collected. With this electron source, the gain of the electron multiplier was measured before each exo-electron experiment.

A combination of strains and different environmental conditions were studied. Under none of the conditions could we detect exo-electrons. We can, however, estimate the maximum rate of their production which would have gone undetected. At 10^{-9} Torr, fluctuations in the background current set the limit of sensitivity to about 50 per cent of the background. At 10^{-6} Torr, a change in current equal to 5 per cent of the background could have been observed. These values appear in Table I as upper limits. For comparison, the maximum emission rate (initial) observed by Wüstenhagen[7] was 10^4 electrons/cm^2 sec of <u>new surface</u> at 2×10^{-5} Torr of oxygen.

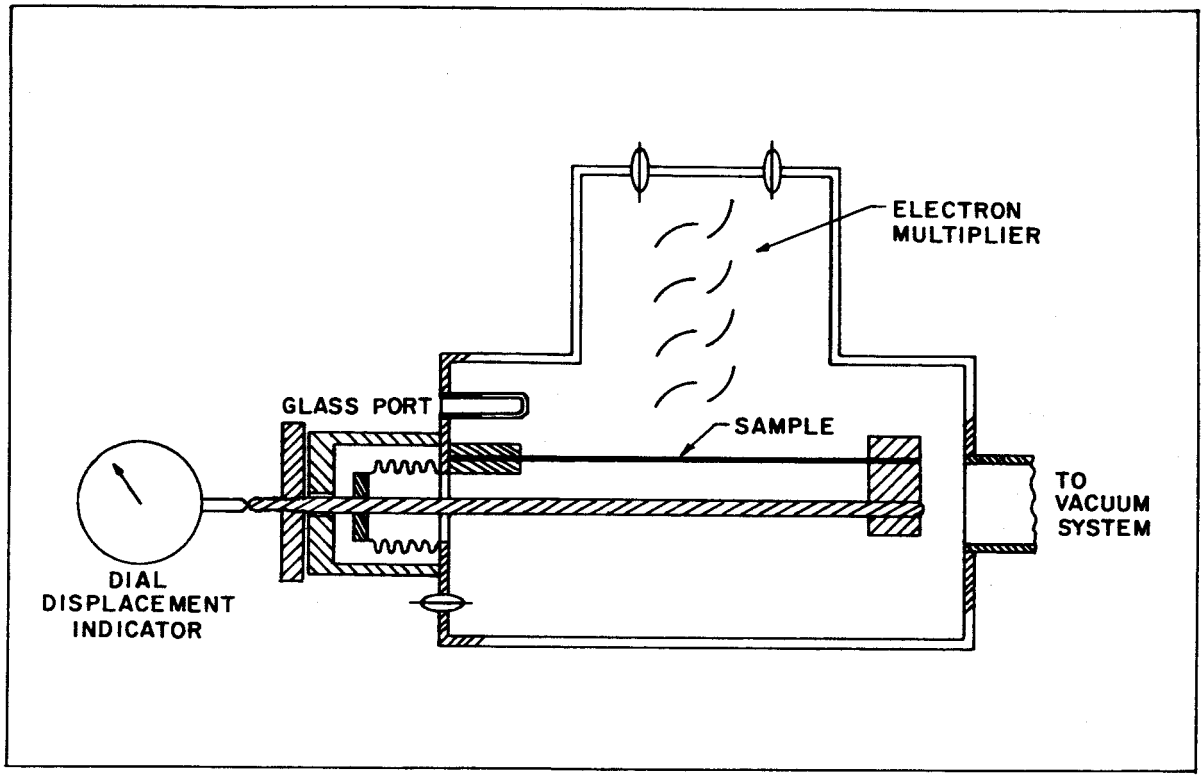

Fig. 6 - Simplified Cross-Section of UHV Sample Chamber

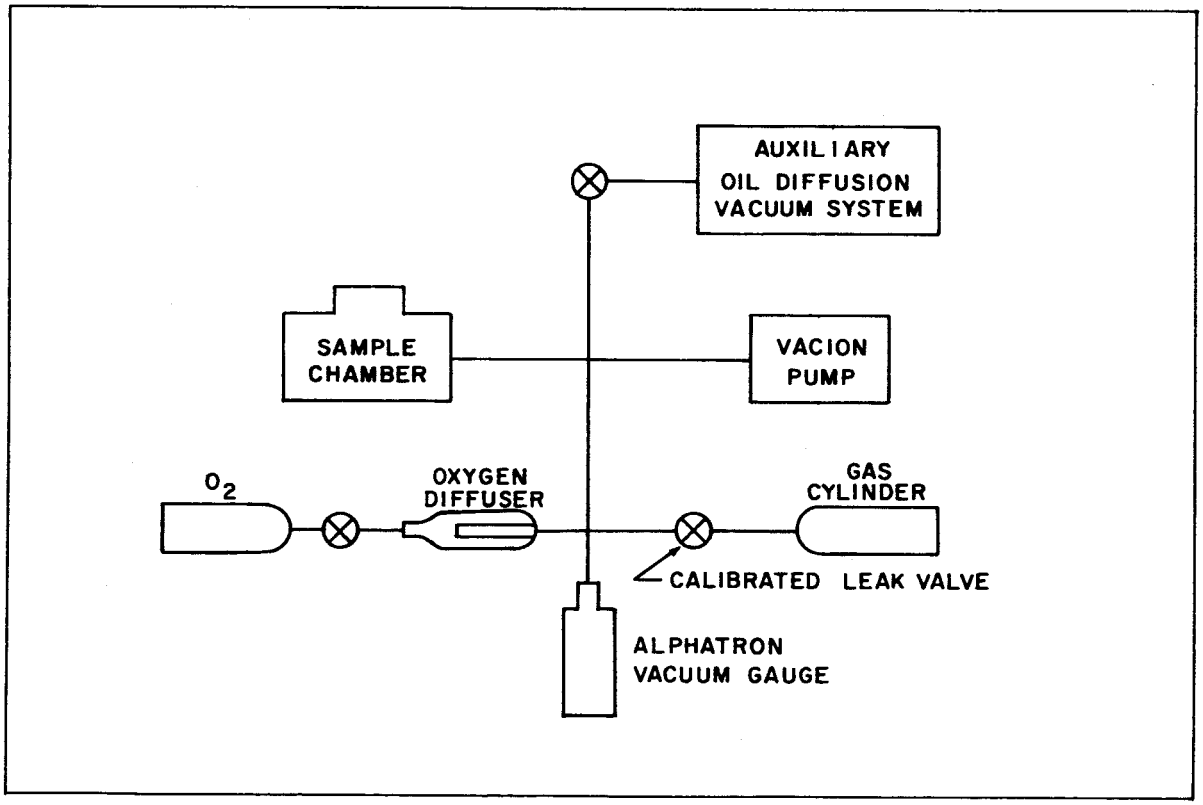

Fig. 7 - Block Diagram of UHV System

TABLE I

EXO-ELECTRON EMISSION FROM STRETCHED ALUMINUM

Material	Pressure	Experiment	Exo-Electrons	Upper Limit (electrons/cm^2 sec)
2S Aluminum annealed and electropolished	$\sim 10^{-9}$ Torr	Stretched 1% in visible light	Not detected	170
"	"	Stretched 10% in visible light	"	"
"	5×10^{-7} Torr	Stretched 10% in dark	"	150
"	10^{-6} Torr of oxygen	Stretched 5% in visible light	"	100

The actual surface area of his evaporated films may have been greater than the geometric area, as the substrates were purposely roughened. The maximum emission rate from a smooth evaporated film of aluminum was $\sim 10^3$ electrons/cm^2 sec. Lohff and Raether[13] measured a maximum emission of about 10^3 electrons/cm^2 sec from bulk aluminum which had just been scraped by a steel brush. Their work was also done at 2×10^{-5} Torr.

Of course, the amount of new surface created in our straining experiment is much less than the actual geometric surface area to which the results are referred. Therefore, the values in Table I should be increased by the ratio (total geometric area/total slipped area) for proper comparison. Unfortunately, this ratio is difficult to estimate, but it should be at least 10, if not greater.*

* Wüstenhagen found one exo-electron emitted per 5×10^{11} oxygen molecules striking unit area of freshly evaporated aluminum. Our results give no more than one electron per 4×10^{12} oxygen molecules striking unit area of surface. If only 10 per cent of this surface were fresh surface, then our results are consistent with those of Wüstenhagen.

Increasing our results by a factor of 10 and comparing with Wüstenhagen indicates that our background currents were too high by about a factor of two to have detected exo-electrons. Thus, the sensitivity of our measurements leaves much to be desired. The high noise level and poor reliability of our multipliers have severely handicapped us. Four electron multipliers have deteriorated in turn to total uselessness over the project period in spite of great care in handling and storage. The high noise level which increased with pressure has been studied belatedly and an explanation for it is given in Appendix II.

IV. DISCUSSION AND CONCLUSIONS

A. Sources

There is still no direct evidence that exo-electrons from deformed metals originate in slip bands. The failure of our direct imaging experiments must be attributed to the extremely small intensity of emission. Perhaps with the use of more sophisticated image intensifiers, this experiment might succeed. We do have strong proof that new surface in the form of slip bands and cracks causes intense photographic blackening (Russel effect). The hydrogen peroxide mechanism seems quite adequate to account for this.

The circumstantial evidence for slip band and crack emission is very strong. In addition to the Russell effect correlation, the fact remains that these are the only sites at which oxidation can occur during deformation. The marked dependence of exo-electron emission on oxygen pressure forces one to conclude that emission does indeed originate in slip bands and cracks. With this assumption, one can then rationalize the shape of the two emission curves obtained from fatiguing aluminum (Figs. 4 and 5). Electrons emitted in the early cycles are caused by the initial formation of slip bands; the rise in emission rate near the end of the test is due to the formation of macrocracks.

B. Magnitude of the Emission Rate

Our only successful detection of exo-electrons occurred during fatigue. Unfortunately, in these experiments we were not equipped to measure the multiplier gain and thus cannot quote an absolute figure for the emission rate. We became aware of the erratic behavior of electron multipliers in continuously pumped vacuum systems as these experiments were being performed. Therefore, in the subsequent experiments in UHV, we made certain that facilities were available for monitoring the multiplier gain prior to each run. In

spite of the shortcomings of the fatigue experiments, we feel that it is reasonable to conclude that exo-electrons are emitted during fatigue of aluminum, and that the intensity, under clean vacuum conditions at 10^{-5} Torr, is extremely small, being only a few per cent above the background dark current of the electron multiplier tube.

The unidirectional strain experiments in UHV were designed to measure the difference between pure strain-induced exo-electron emission and oxidation-induced emission. Because no emission was detected under any conditions, including those for which both light and oxygen were present, direct conclusions are not possible. Comparison with other work[7] indicates that, if emission originates only at newly exposed surface, then our sensitivity was too low to detect exo-electrons. If strain-induced emission is supposed to occur uniformly over a strained surface (as opposed to concentration in slip bands), then our results show that following 10 per cent strain this emission is less than $\sim 10^2$ electrons/cm^2 sec, an extremely low figure.

The fact that electrons were detected in the fatigue experiments and not in the unidirectional work must be attributed to the fact that fatigue stressing can accumulate rather large amounts of plastic strain. For example, at 400 cps (the frequency of our test) 10 per cent strain can be accumulated in 1 sec. with only 0.025 per cent strain per cycle. We do not know the rate of strain accumulation in our constant load fatigue test, but it must certainly have been at a rate sufficient to produce more new surface area than the unidirectional tests.

Because the rate of exo-electron emission is so low and is so sensitive to the environmental conditions, the use of the phenomenon as a practical fatigue monitor seems remote at the present time. The fact that electrons are emitted, most likely from slip bands and from fracture surfaces, should not, however, be forgotten. As the sensitivity of detection devices improves, and as fundamental research into the nature of the exo-electron emission process continues, the chances will improve for using these electrons as sensitive indicators of microplastic strain.

C. A Model for the Emission of Exo-Electrons from Aluminum

The magnitude of the quantitative emission limits compared with the emission from freshly evaporated aluminum[7] suggests strongly that emission in uniform deformation is restricted to the slip lines and bands. We therefore adopt as most reasonable the view that exo-electrons are formed during the oxidation of newly exposed surface. A prompt emission takes place as

indicated by our fatigue results. Electrons caught in shallow surface traps may be stimulated by incident light and cause delayed emission. Conrad and Levy[14] have shown this to be especially true for fracture surfaces. The exact way in which the oxidation process releases a free electron is not known.

D. Conclusions

1. The evidence favors the view that exo-electrons are emitted from freshly exposed surface formed during deformation, either at slip bands or in cracks.

2. The process of oxidation is necessary for the emission of prompt exo-electrons from these surfaces.

3. A very weak exo-electron intensity has been recorded from fatiguing aluminum.

4. An upper limit to the emission rate during unidirectional strain at 10^{-6} Torr is $\sim 10^2$ electrons/cm^2 sec. Unit area refers to the actual geometric surface. This value agrees with earlier quantitative work with evaporated surfaces provided about 10 per cent of the total surface is slipped (new surface) area.

5. In view of the very low intensity of exo-electrons from fatiguing aluminum and the necessity of oxygen for emission, it does not appear feasible at this time to apply the results to a means of monitoring fatigue damage.

REFERENCES

1. Kramer, J., Der Metallische Zustand (Gottingen, 1950).
2. Grunberg, L., and Wright, K., Brit. J. Appl. Phys., 9, 85 (1958).
3. Bohun, A., Phys. Stat. Sol., 3, 779 (1963).
4. Von Voss, W. D., and Brotzen, F. R., Journ. Appl. Phys., 30, 1639 (1959).
5. Meleka, A. H., and Barr, W., Nature, 187, 232 (1960).
6. Russell, W. R., Proc. Roy. Soc. (London), 61, 424 (1897).
7. Wüstenhagen, J., Z. für Naturforsch., 14A, 634 (1959).
8. Lohff, J., Z. für Phys., 146, 436 (1956).
9. See Grosskreutz, J. C., Journ. Appl. Phys., 33, 2653 (1962).
10. Moser, Pogg. Ann., 56, 177 (1842).
11. Keenan, G. L., Chem. Rev., 3, 95 (1927).
12. Grunberg, L., Proc. Phys. Soc., 66B, 153 (1953).
13. Lohff, J., and Raether, H., Z. für Phys., 142, 310 (1955).
14. Conrad, M. A., and Levy, S., Nature, 189, 887 (1961).

APPENDIX I

SOLID-STATE THIN FILM EXO-ELECTRON DETECTORS

We originally supposed that exo-electrons emanate from shallow traps in the oxide covering of a metal when the metal and oxide are strained. Such a view is still prevalent in the field, but is losing favor. Electrons from these sources would be emitted into the vacuum level of the oxide conduction band and have a high probability of escaping the surface. A positively biased overlayer of a semiconductor should be effective as a collector. The current of exo-electrons would be proportional to the strain. Thus, the integrated current would be proportional to integrated strain and to the accumulated fatigue damage. Such a simple collector might be applied to a structural member and instrumented to indicate when accumulated fatigue damage made the member unsound. This was the thinking which initiated the work on thin film collectors.

A device with low voltage rectifying properties was sought, i.e., one which exhibited higher resistance in the forward direction, the direction of exo-electron emission, than in the back direction. Such a characteristic implies a potential barrier at the oxide-semiconductor interface. Exo-electrons with energies well up in the conduction band would have a far greater probability of surmounting this barrier than would low energy "ordinary" electrons, thereby producing a high signal-to-noise ratio.

Since no adequate theory exists for predicting the behavior of such a collector, the influence of semiconductor work function, bandgap, and oxide thickness were studied empirically. The electrical characteristics were measured at low voltage and extremely low currents. At higher voltages, the resistance decreases because of quantum mechanical tunneling through the oxide. Such a tunneling current would completely mask any exo-electron emission.

Figures 8 and 9 show typical results of electrical measurements on various samples. An exo-electron current density of 10^{-10} amp superimposed on the forward leakage current might be easily detected with some of the devices using a bias of 1/2 v., a 100 Å oxide coating, and selenium as the collector.

The investigation of this detection method was terminated early in the first year because of a dilemma based on:

1. A growing suspicion that the dominant source of exo-electrons was the surface oxidation of metals.

2. The observation of anomalous behavior* of these multilayer devices under strain in moist air.

---

* The open circuit voltage of the multilayer structure is strongly dependent on oxygen and water vapor diffusion to the substrate.

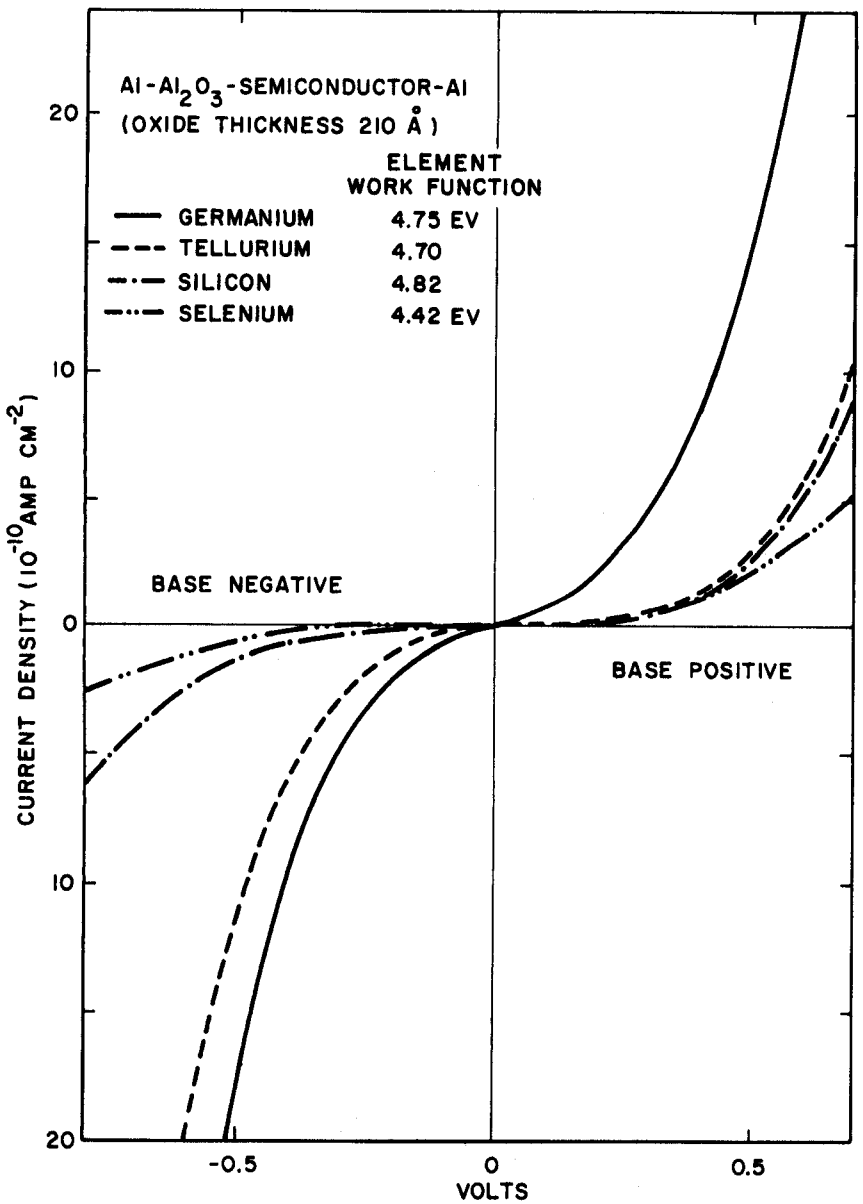

Fig. 8 - Current-Voltage Characteristics of Thin Film Multi-layer Devices Using Different Semiconductors

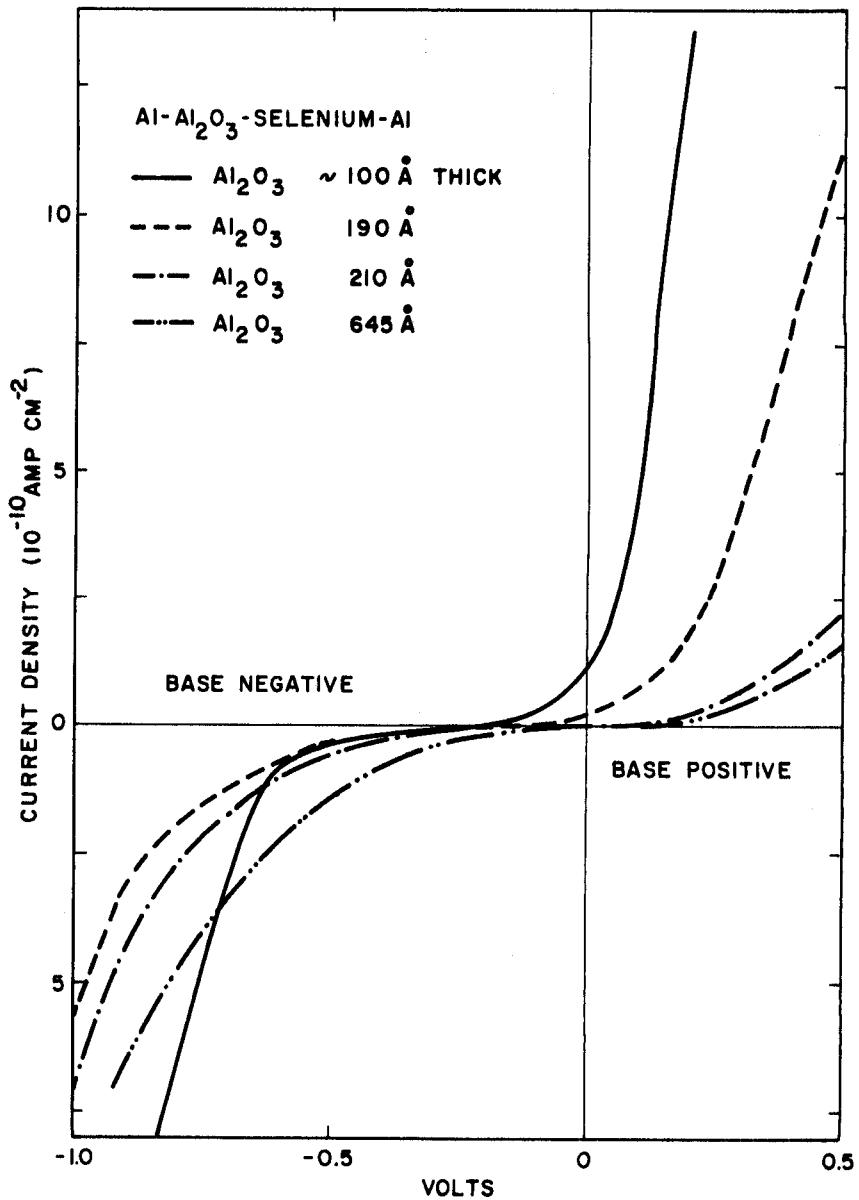

Fig. 9 - Current-Voltage Characteristics of a Thin Film Multi-layer Device for Different Oxide Layer Thicknesses

Dilemma: If oxidation is required, the collector plates must be permeable to oxygen. If the anomalous behavior under strain were to be avoided, water vapor must be excluded.

No satisfactory solution presented itself during the remainder of the project.

APPENDIX II

ELECTRON MULTIPLIER BACKGROUND CURRENT

The background anode current of our copper-beryllium electron multiplier increased with pressure. Only after the basic research effort was concluded, did we find an explanation for this annoying effect.

Using a multiplier with deteriorated gain of 140, we obtained the data of Fig. 10. That part of the background current due to the Vac-ion pump is nearly linear with pump current. A low, constant background current has been subtracted. Two explanations are possible: (1) negative ions or electrons escape from the pump and diffuse into the sample chamber where they are collected; (2) energetic photons emitted by the ionized gases in the pump reflect around the corners of the vacuum system into the sample chamber where they produce photoelectrons which are collected. The linear dependence of multiplier current upon the pressure is compatible with either of these mechanisms.

We have attempted to detect free negative ions in a mass spectrometer, partial pressure gas analyzer which is pumped by two Vac-ion pumps. At 7×10^{-6} Torr, no such ions could be detected with a sensitivity of 0.01 ions per second. Further, we have impressed a magnetic field near the exit port of the Vac-ion pump sufficient to deflect electrons, but the background current was unaffected. We conclude that the background current is probably caused by the second mechanism described above.

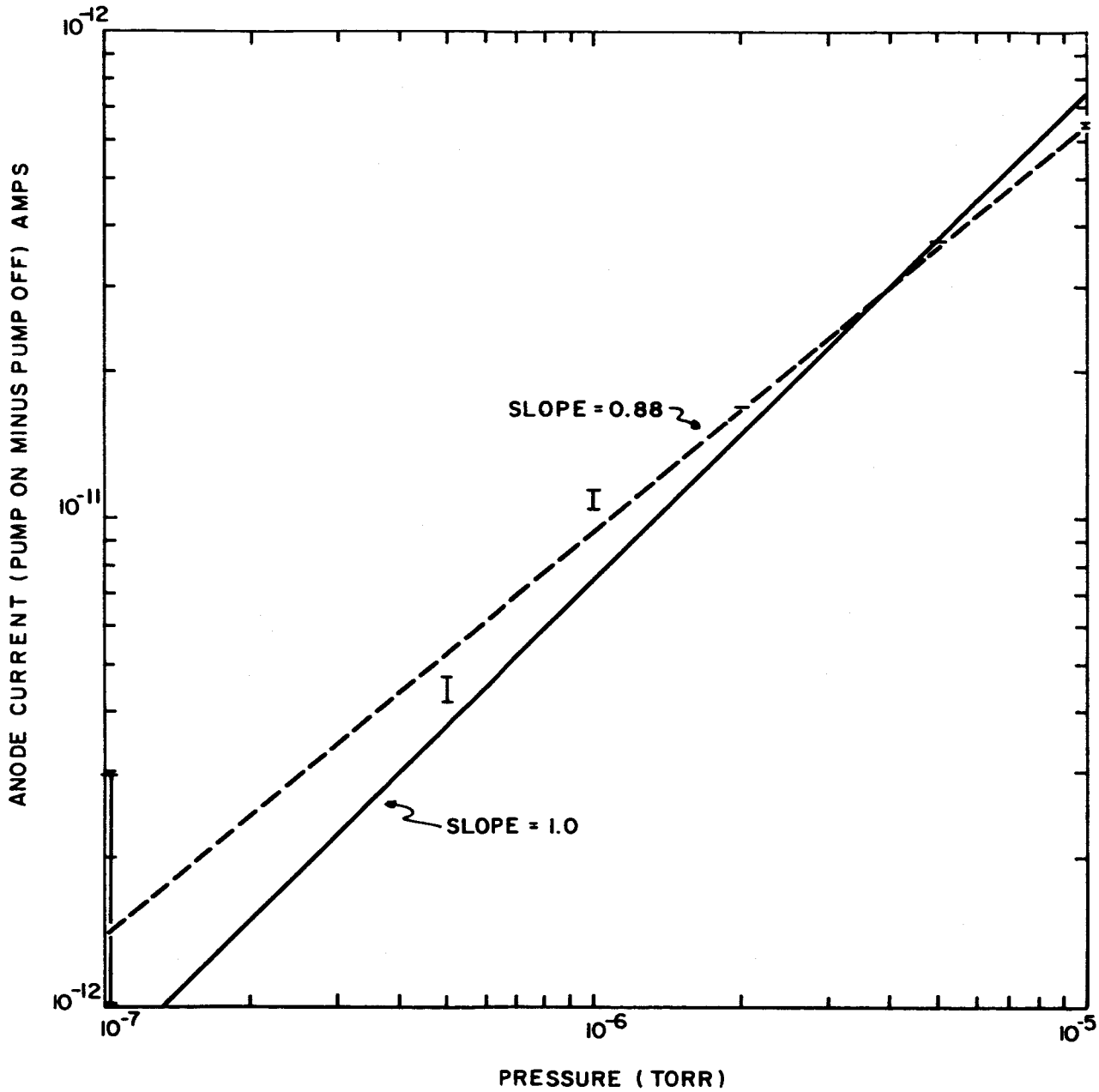

Fig. 10 - Electron Multiplier Background Current vs. Pressure (Vac-Ion Pump On)

APPENDIX III

TREATMENT OF OXIDE COATED Al WITH ATOMIC HYDROGEN

To establish whether or not the presence of an oxide layer is essential for the generation of exo-electrons at a metal surface, it was necessary to devise some technique by which such a coating could be completely removed, with as little perturbation of other surface parameters as possible. Although exo-electron collection from oxide-free aluminum was never carried out, due to electron multiplier sensitivity problems, the oxide removal technique is of sufficient interest to report here.

Aluminum presents a particularly difficult problem since it possesses both a relatively low melting point and an exceptionally stable and refractory oxide. Ultimately, treatment with atomic hydrogen was chosen as the most desirable possibility, whereby the oxide would be reduced by the reaction

$$Al_2O_3 + 6H \longrightarrow 2Al + 3H_2O\ (g) + 86\ \text{kcal} \quad .$$

The atomic hydrogen was generated at a hot tungsten filament ($T_f \sim 1500°C$) in a hydrogen atmosphere ($P_{H_2} \sim 25\mu Hg$) which was introduced via a palladium diffuser into a Vac-ion pumped system (see Fig. 11).

The immediate problem was to establish the degree to which the aluminum surface is being cleaned by this process. It has been determined many times that the work function of a metal surface is extremely sensitive to the microscopic conditions at the surface. Therefore, a quartz window was incorporated into the system to facilitate determination of the photoelectric threshold. The threshold can be measured either by finding the optical threshold frequency ν_t at which photoelectrons can first be detected, or by measuring the retardation potential V_r where all photocurrent is suppressed. In the latter case the photocathode is illuminated with light of known frequency, $\nu > \nu_t$. The energy relations involved here are described by the equation

$$E_{max} = (h\nu - \phi) = eV_r$$

where E_{max} is the maximum kinetic energy a photoelectron can possess and ϕ is the photoelectric threshold (or work function) of the metal surface in question.

It is also possible to discern changes in the surface conditions of a metal by measuring the contact potential with respect to a known metal surface - in this case thermally-cleaned tungsten.

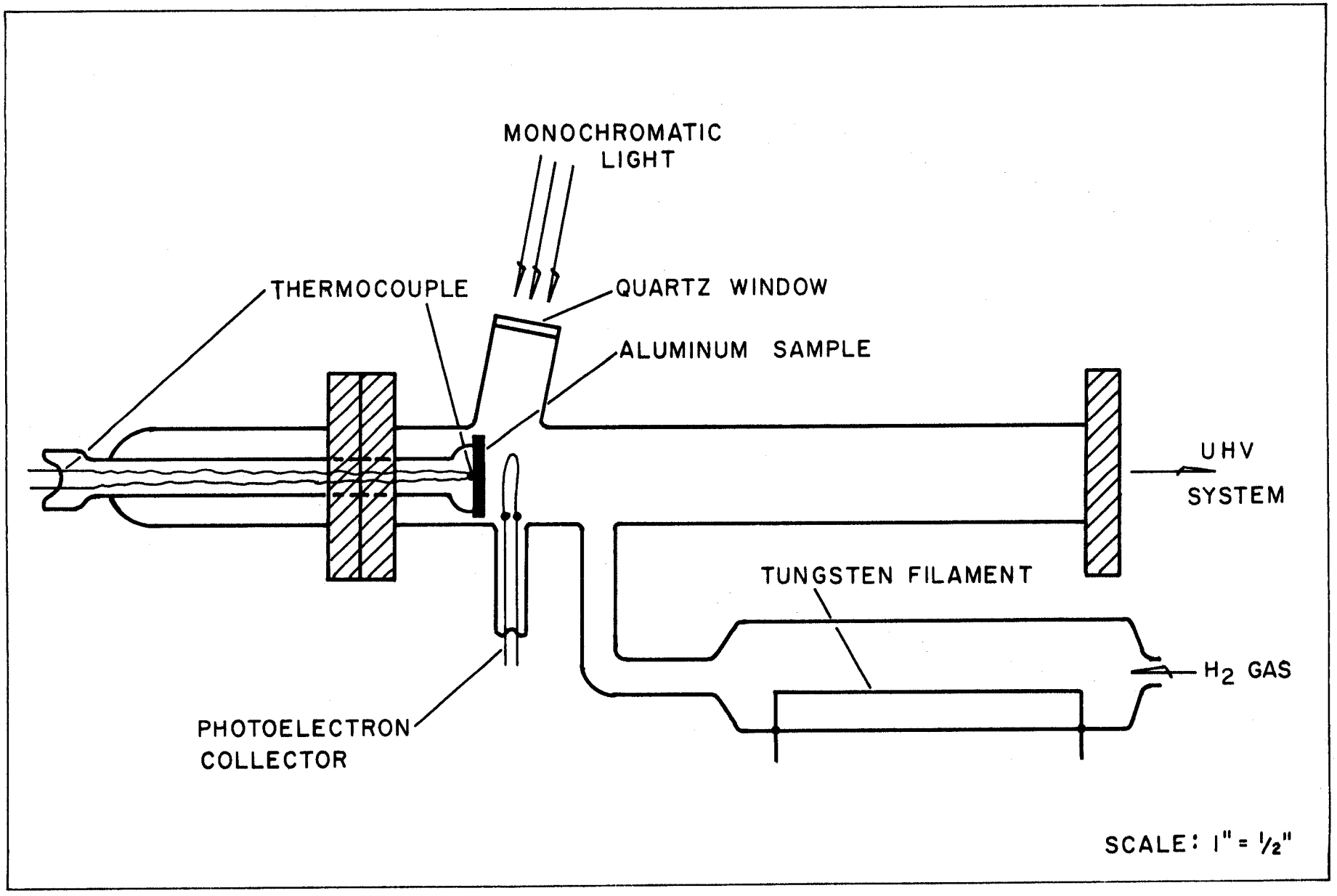

Fig. 11 - Schematic Diagram of Apparatus for Cleaning Oxide Layer from Aluminum

Contact potential differences can be detected in several different ways, one of which is to treat the setup shown in Fig. 11 as a vacuum diode. If we operate under conditions where space charge effects are small (i.e., at a low thermionic cathode temperature), there are two relatively well defined regions in the characteristic curve of an ideal diode. For very low currents and voltages the curve is exponential, following the relation

$$I_a = I_s \exp\left\{e(V_a+\phi_c-\phi_a)/kT\right\} \quad ,$$

where I_a is the plate current, V_a is the plate voltage, and ϕ_c and ϕ_a are the cathode and anode contact potentials. At higher voltages the current saturates with $I_a = I_s$, all emitted electrons being collected immediately at the anode. At the saturation threshold voltage, V_{as} , the exponential factor is set equal one; therefore, $V_{as} + \phi_c-\phi_a = 0$. In this way the value of $(\phi_c-\phi_a)$ is determined.

Unfortunately no meaningful results could be obtained by either method. The use of the first photoelectric technique was frustrated by lack of an adequate source of monochromatic light continuously variable throughout the near ultraviolet. With the second photoelectric technique it was possible to get fairly substantial photocurrents, using a filtered mercury line source. Any meaningful shifts in the current-voltage curves, however, were obscured by space charge effects and charge accumulation on the container walls. This also proved to be the case in the contact potential measurements. Clearly a major alteration in electrode geometry would be required for unambiguous results.

The only remaining possibility for acquiring some information about the atomic hydrogen process was to look at the temperature of the aluminum disc while the reaction was taking place. Briefly, an aluminum sample disc was electropolished and then anodized to form an oxide coating of approximately 400 Å thickness. A chromel-alumel thermocouple was then soldered onto the back of the disc and it was sealed into the vacuum system. Upon pumping down to $\sim 10^{-9}$ Torr following a 200°C bakeout, a hydrogen pressure of roughly 25μ was maintained dynamically by balancing the input from the palladium diffuser and the exhaust rate to an auxiliary oil diffusion pump. For these runs, the photoelectron collector filament (Fig. 11) was heated to provide the atomic hydrogen. This procedure insures a copious supply of H at the sample surface, but it also results in radiant heating of the sample. Therefore, temperature changes due to the hydrogen reduction process or to the recombination of hydrogen will be superposed on the equilibrium temperature reached in the presence of the hot filament.*

* Actually the close proximity of the hot filament proved to be a fortunate circumstance as it later helped to evaporate the reduced aluminum layer which formed on the sample.

Initial runs taken over a period of about 20 min. merely showed a monotonic temperature rise to equilibrium. This, of course, is not sufficient to establish whether or not the heat generated is due to oxide removal or simple hydrogen recombination at the surface. It was not until a very extended run was made that it became obvious that there were in fact some rather complicated processes taking place at the aluminum surface. The results of this run and two subsequent runs are shown in Fig. 12.

It was observed that the disc temperature rapidly reached a rather modest equilibrium temperature of about 67°C which it maintained for over 2 hr. Then the temperature commenced to increase relatively rapidly, attaining a value of about 180°C in the next 2 hr. At this point some further leveling off occurred, accompanied by the formation of a metallic deposit on the walls of the vacuum chamber in the form of a ring adjacent to the edge of the disc (see Fig. 11).

At this point the experiment was stopped and the hydrogen removed. The sample temperature then rose quickly to a vacuum equilibrium value of 365°C. Three more runs were then made on this sample. One was made in vacuum, showing the rapid attainment of the 365°C equilibrium value. A brief run in hydrogen after the disc had remained in the system for 60 hr. ($P \sim 10^{-9}$ Torr) showed a rapid initial rise, reaching 215°C after only 10 min. running time. Another run in hydrogen, taken after exposure to air for about 10 min., exhibited a similar heating curve, leveling off at around the same temperature.

An attempt was made to ascertain what had actually transpired by metallographic techniques. Although part of the original anodic film remained, it was not possible to float off a self-supporting film after dissolving away the bulk metal as could be done with a control disc. Also, a thin coating of Al covered the surface of the partially reduced oxide film. Furthermore, the metallic deposit on the walls was found to be aluminum. Therefore, it seems apparent that at least some oxide had been reduced and aluminum from the disc was transferred to the walls. The precise mechanisms involved remain unclear.

A tentative explanation is that the initial thermal plateau is a region where the dominant processes are the relatively slow reduction of the oxide by the atomic hydrogen and conduction cooling of the disc by the molecular hydrogen gas. The heat of reaction generated during the reduction process is insufficient for the sublimation of the thin aluminum metal layer that must subsequently form. It is also likely that the more energetic hydrogen recombination reaction must go on concurrently, imparting sufficient energy to the catalyzing aluminum atoms to eject a certain percentage from the surface. The indications are that the reduction reaction is the rate governing process, however.

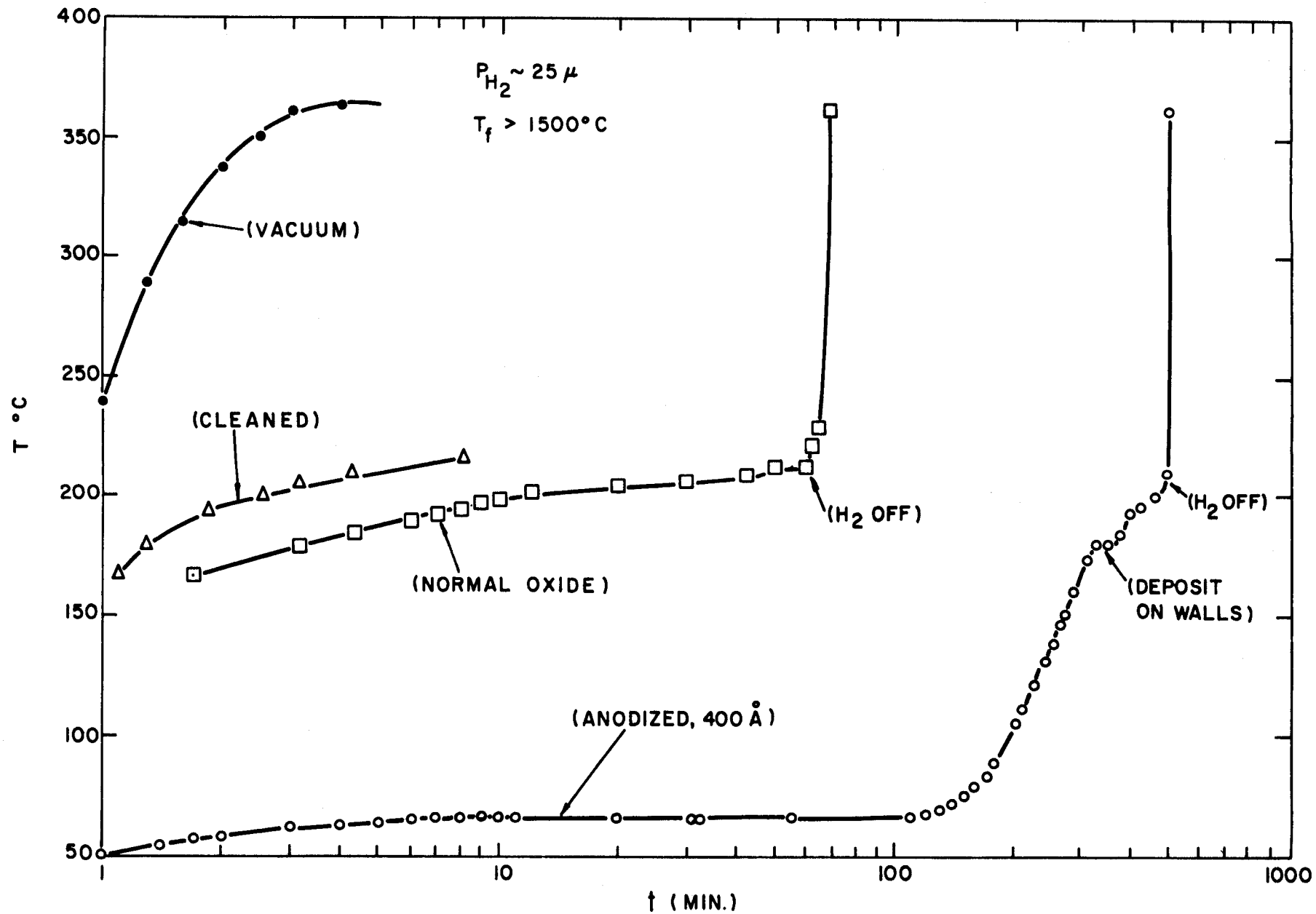

Fig. 12 - Sample Temperature vs. Time During Hydrogen Cleaning Experiments

One might next conjecture that once a portion of the oxide layer covering the disc has been stripped away completely (say, at the edge of the disc) the hydrogen recombination reaction will be favored, and there will be an attendant rise in temperature with a copious evaporation of aluminum. The evaporation is assisted by the radiation heating from the nearby filament. This of course is merely a hypothesis constructed to explain a single set of experiments.

It is not even possible to say whether the oxide was removed uniformly or only in patches, or if it ever is removed to the last monolayer. Nor is it possible to tell if the resulting surface might not be covered with a thin hydride coating. It has been established that the atomic hydrogen very definitely reacts with the anodic oxide coating, and hence merits further investigation, particularly in view of the fact that there is no other satisfactory method for treating the surface of metals such as Al, Be, Mg, etc.