[redacted]

N65-21353
(ACCESSION NUMBER)
23
(PAGES)
CR 51892
(NASA CR OR TMX OR AD NUMBER)
(THRU)
1
(CODE)
03
(CATEGORY)
FACILITY FORM 602

GPO PRICE $ _____

OTS PRICE(S) $ _____

Hard copy (HC) $1.00

Microfiche (MF) .50

ENGINEERING RESEARCH
OKLAHOMA STATE UNIVERSITY

Fluid Power Controls Laboratory
School of Mechanical Engineering
OKLAHOMA STATE UNIVERSITY
Stillwater, Oklahoma

Sept 26 522

PROGRESS REPORT NO. 64-5

STUDY IN FLUID TRANSIENTS IN
CLOSED CONDUITS

Contract: NAS 8 11302

PROGRESS REPORT NO: 64-5

Period of Report: 1 November 1964 through 30 November 1964

Contractor: Oklahoma State University, Stillwater, Oklahoma

Segment Generating Report: School of Mechanical Engineering
Fluid Power and Controls Laboratory

STUDY OF FLUID TRANSIENTS IN CLOSED CONDUITS

Contract: NAS 8 11302

Control Number: DCN-1-4-50-01153-01(IF)
CPB 02-1209-64

Date: 7 December 1964

Prepared for: George C. Marshall Space Flight Center, Huntsville, Alabama

Prepared by: Dr. J. D. Parker, Project Co-Director
C. R. Gerlach, Project Leader

Approved:

E. C. Fitch

J. D. Parker

CONTENTS

Section		Page
I.	Authorization and Program Schedule	1
II.	Information Report	3
III.	Monthly Progress	9
IV.	Anticipated Progress	19

PROGRESS REPORT ON

FLUID TRANSIENTS STUDY

I. Authorization

This report covers the work performed during the period 1 November 1964 through 30 November 1964 and the work that will be pursued during the period 1 December 1964 through 31 December 1964, as authorized by:

Contract: NAS 8 11302

PROGRAM SCHEDULE

○ Scheduled start or end of event
● Actual start or end of event
□ Anticipated slippage
■ Actual slippage

Work Description	J	A	S	O	N	D	J	F	M	A	M	J
I. Comprehensive Review of Literature												
II. Analytical Investigation												
A. Development of Mathematical Model for Transient, One-Phase Fluid Conduit												
B. Development of Analog Model Based on Results of A.												
C. Development of Mathematical Model for Transient, Two-Phase Fluid Conduit												
D. Development of Analog Model Based on Results of C.												
III. Experimental Investigation - Conduct on experimental study to verify the models developed in Part II.												
IV. Investigate Analytically the Effect of Components on a Conduit system.												
V. Report Final												

II. Information Report

A. Distributed- and Lumped-Parameter Conduit Systems

In a conduit system the effect of the mass, resistance, etc. are distributed with respect to space and time. In other words a conduit is a distributed-parameter system and hence must be described by partial differential equations. There are some circumstances under which we may reduce the describing equations to ordinary differential equations by considering the effects of these distributed parameters to be concentrated at one location. This is called lumping and the resulting equations then describe a lumped-parameter system. This method has been found to be valid if the frequencies involved are not greater than about one-eighth of the first critical frequency of the system. The lumped-parameter approach gives a first approximation in the solution of a problem. To compare both types of systems let us consider the simple case of a one-dimensional conduit with no friction losses. The distributed-parameter model for this case is represented by the equation of motion

$$1) \quad \frac{\partial v_z}{\partial t} = -\frac{1}{\rho_0}\frac{\partial p}{\partial z}$$

and by the continuity relation for a liquid

$$2) \quad \frac{\partial p}{\partial t} = -K\frac{\partial v_z}{\partial z}$$

Solution of these equations leads to the transfer equations between section 0 and L of a conduit

$$3)\quad P(L,s) = P(0,s)\cosh\frac{sL}{c_0} - c_0\rho_0 V(0,s)\sinh\frac{sL}{c_0}$$

and

$$4)\quad V(L,s) = V(0,s)\cosh\frac{sL}{c_0} - \frac{P(0,s)}{c_0\rho_0}\sinh\frac{sL}{c_0} \quad .$$

Going back now and assuming the compressibility to be lumped at z=0 and also lumping the mass we may rewrite Equations 1) and 2) in transformed form as (See Figure 1)

$$5)\quad sV_L = -\frac{1}{\rho_0}\,\frac{(P_L - P_0)}{L}$$

and

$$6)\quad sP_0 = -K\,\frac{(V_L - V_0)}{L} \quad .$$

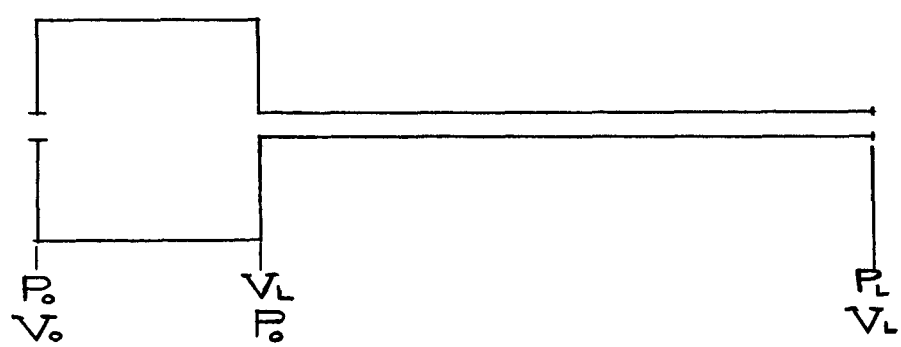

Figure 1 Lumped Frictionless Conduit

From 5) and 6) the transfer equations are obtained as

$$7)\quad P(L,s) = P(0,s)\left[1 + \frac{s^2 L^2}{C_o^2}\right] - sL\rho_o V(0,s)$$

and

$$8)\quad V(L,s) = V(0,s) - \frac{sL}{\rho_o C_o^2} P(0,s) \quad .$$

Notice that Equations 7) and 8) may be obtained from 3) and 4) by assuming $\left(\frac{sL}{C_o}\right)$ to be small and then writing the appropriate forms for $\cosh\frac{sL}{C_o}$ and $\sinh\frac{sL}{C_o}$ for small agrument.

There are many ways of lumping conduit systems, depending on the spatial placement of the lumped parameters. For example, we might have put one-half of the compressibility effect at each end instead of at only one end. There are many possibilities.

One should not be misled in the use of a lumped-parameter model. It is important to remember that it is good only for relatively low frequency (less than one-eighth the first critical frequency). Because of this restriction, the lumped model is only adequate for a frequency analysis or for a time domain analysis in which there are no sharp inputs which excite high frequencies. There seem to be three main reasons for using a lumped-parameter model:

a) Allows use of electrical analogies

b) To get first approximation answers

c) Easy to solve a complex system for time domain response on analog computer.

d) Permits the use of different property values, such as ρ_o and c_o, for each lump, approximating the variable property case. This would be particularly important where there are localized changes of phase since property variations are often quite large.

B. Analog Methods in Conduit Analysis

Most of our efforts thus far have been directed toward the development of transfer equations for conduits which yield good information with respect to frequency analysis but are rather difficult to use with respect to time domain analysis. One method of analysis which has been found useful by previous investigators with regard to the time domain is the analog method. Solutions by the analog method generally fall under one of two groups:

A) Simulation of the Model

B) Solution of Model Equations.

Simulation involves building a representation of the model using computer elements (capacitors, resistors, multipliers, dividers, function generators, etc.). The simulation of a conduit system on an analog computer is best suited to a lumped-parameter model of the system. Using a pressure-voltage analogy the electric equivalent of the lumped frictionless model represented by 5) and 6) is shown in Figure 2.

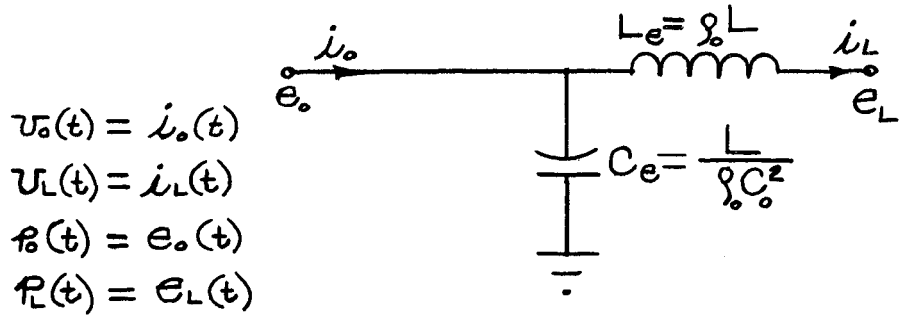

Figure 2 Electrical Analogy for Lumped Lossless Conduit

If the conduit is not lossless but has friction then one electrical representation is shown in Figure 3 where $R = \frac{P_L - P_0}{v}$ for steady flow velocity v. If the flow is laminar then R is a constant for a given conduit and fluid, but if the flow is turbulent then R is some function of v.

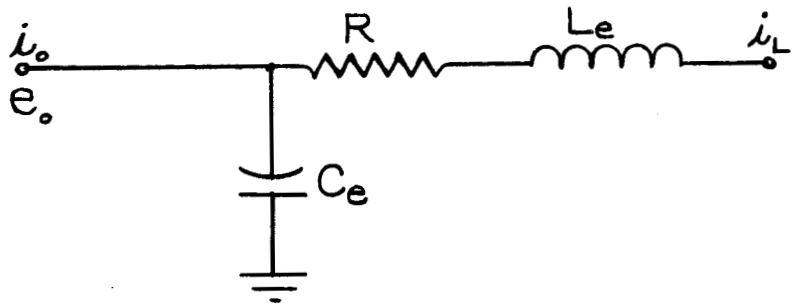

Figure 3 Electrical Analogy for Lumped Conduit with Friction

One method which has been used to improve the accuracy of these lumped models is to represent segments of a line by an analogy such as above ganged together in series. Suppose, for example, we represent the conduit of Figure 3 by n segments instead of a single segment. The new analogy is shown in Figure 4.

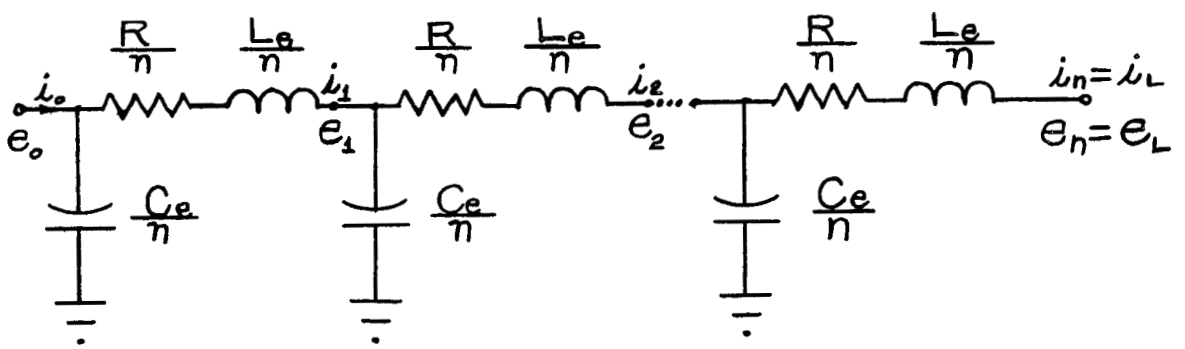

Figure 4 Analogy for n-Segmented Lumped Conduit with Friction

There are a great variety of lumped models available for use in analog simulation; however, it must be remembered that their use must be limited to those applications involving relatively low frequencies. When the frequencies involved are such that the lumped-parameter model is not valid, then the distributed-parameter model must be used.

Several investigators have represented a lossless distributed parameter conduit on an analog computer by writing the transfer equations in terms of time delays, thus

$$9)\quad P_L - Z_c v_L = P_o(t-T_d) + Z_c v_o(t-T_d)$$

and

$$10)\quad P_o - Z_c v_o = P_L(t-T) - Z_c v_L(t-T_d)$$

where Z_c is the characteristic impedance for the line. The block diagram representation of such a model is shown in Figure 5(a).

There appears to be much room for improvement in the development of analog models for distributed parameter systems. It appears to the writer, however, that it will be difficult to attain the degree of exactness in analog conduit models that is attained in the transfer equation models developed thus far.

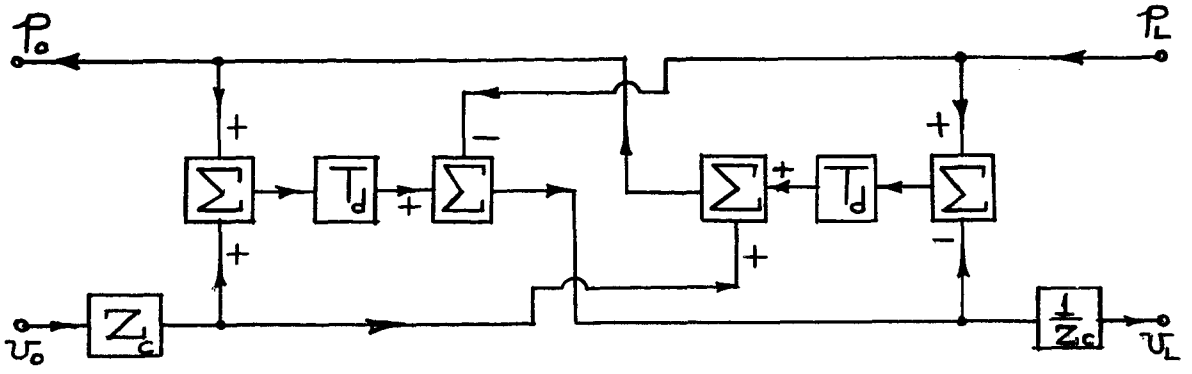

(a) Lossless Distributed Parameter Conduit Block Diagram

Summation Block

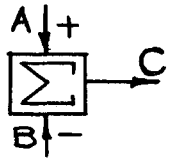

$C = A - B$

Multiplication Block

$B = A \cdot C$

(b) Block Notation

Figure 5

III. Monthly Progress

A. Experimental Investigation

The major effort during the report period on the part of the one-phase group was the completion of the first test setup. As indicated in previous progress reports, this first experimental apparatus consists of a conduit with a constant pressure reservoir at one end and an oscillating piston at the other end as shown schematically in Figure 6. See also Figures 7-9.

The oscillator driver is powered by a hydraulic motor. By controlling the flow rate of the driving fluid to the hydraulic motor, its speeds may be varied from near zero to 4000 rpm. The pipe length and diameter may be varied up to 80 feet and 3 inches

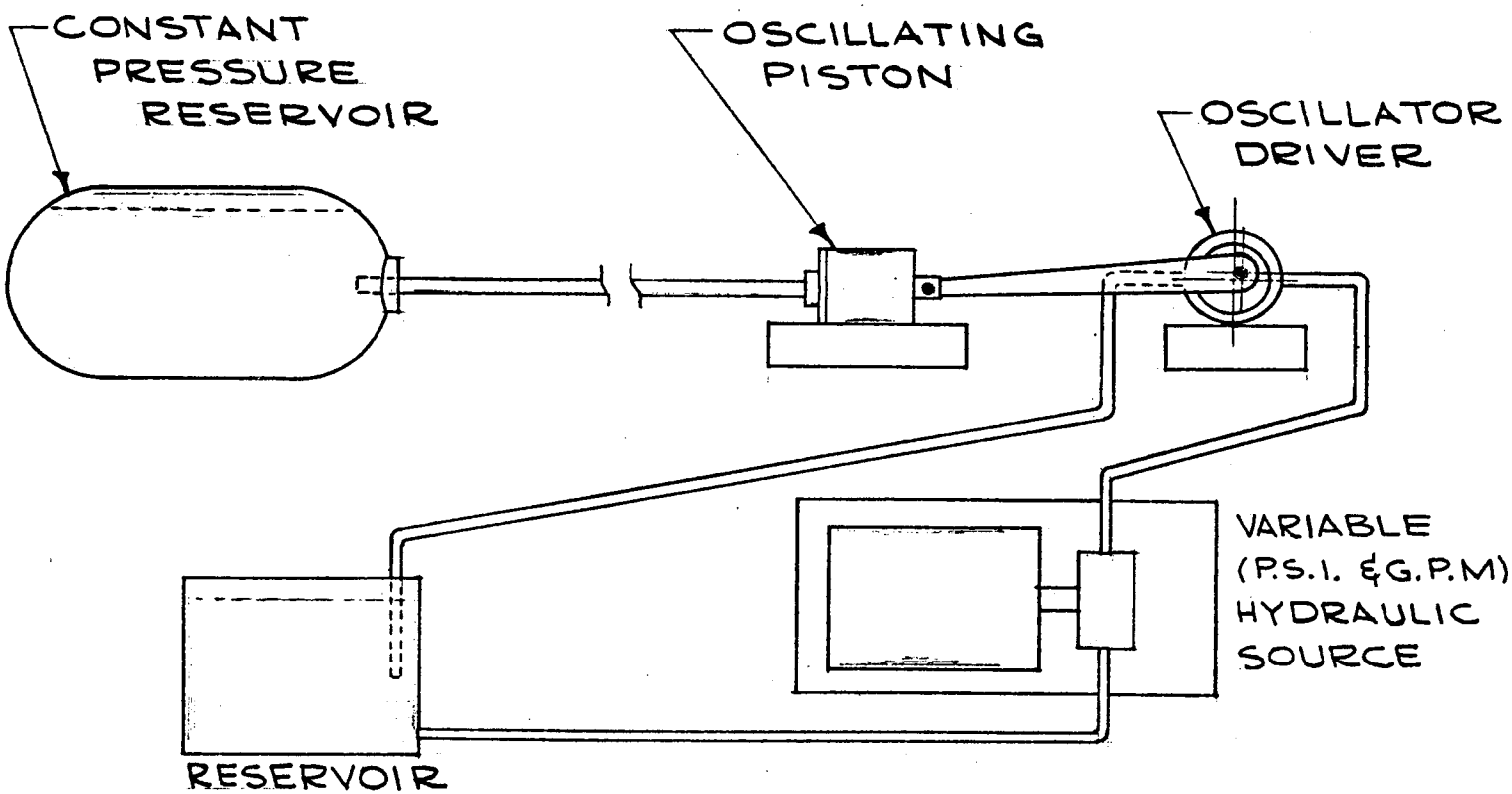

Figure 6 Schematic of Experimental Setup

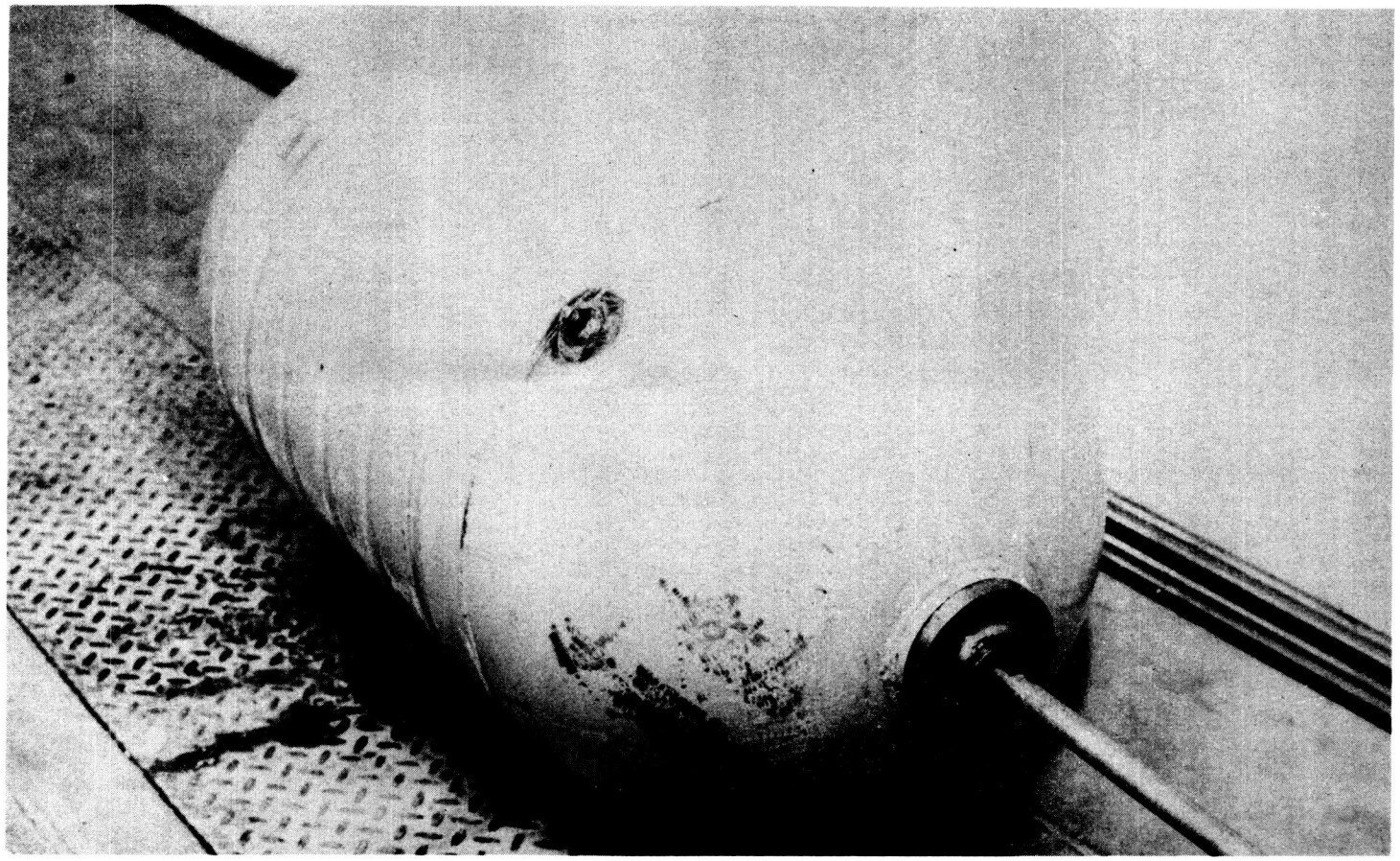

Figure 7 Constant Pressure Reservoir

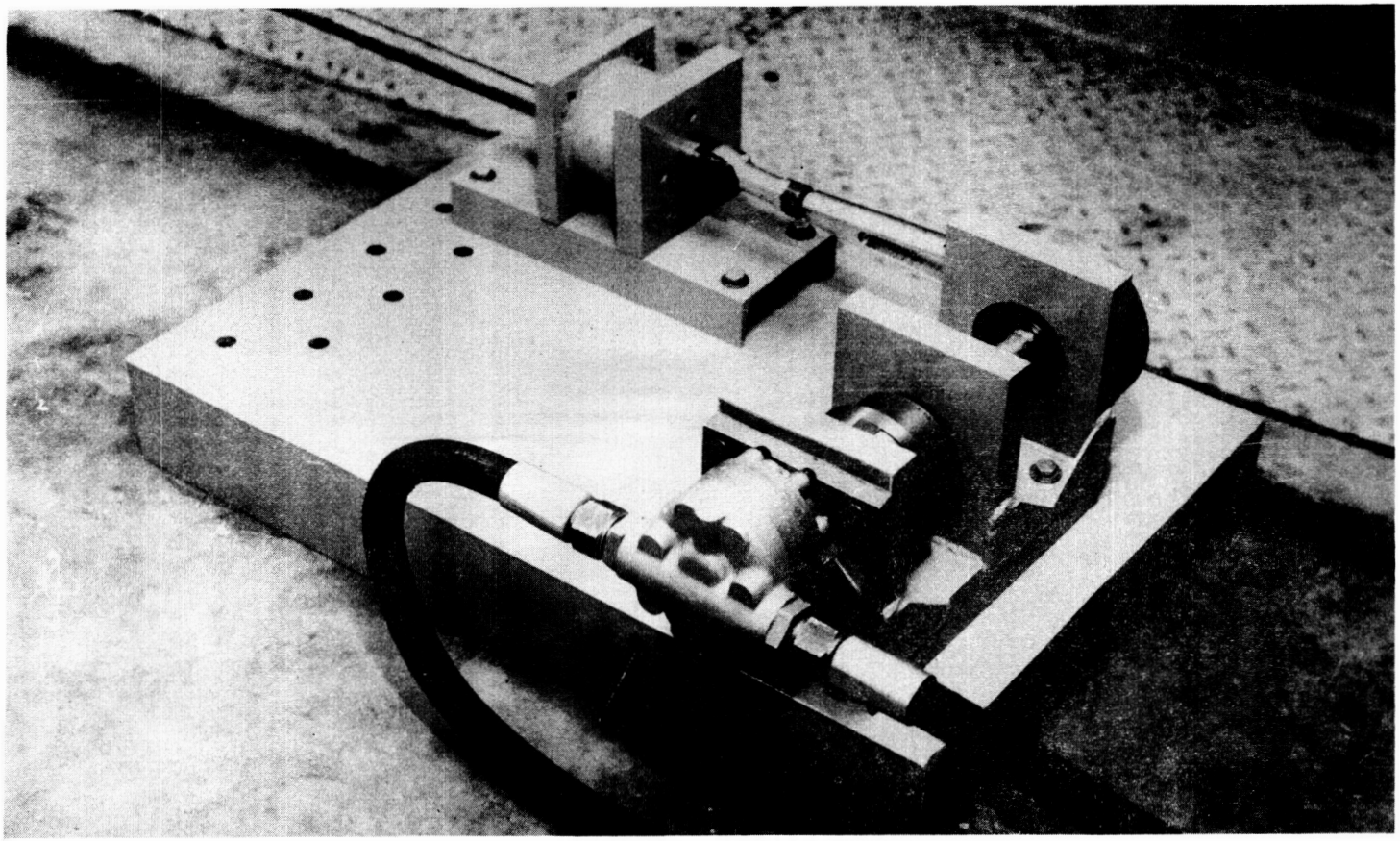

Figure 8 Oscillator Unit

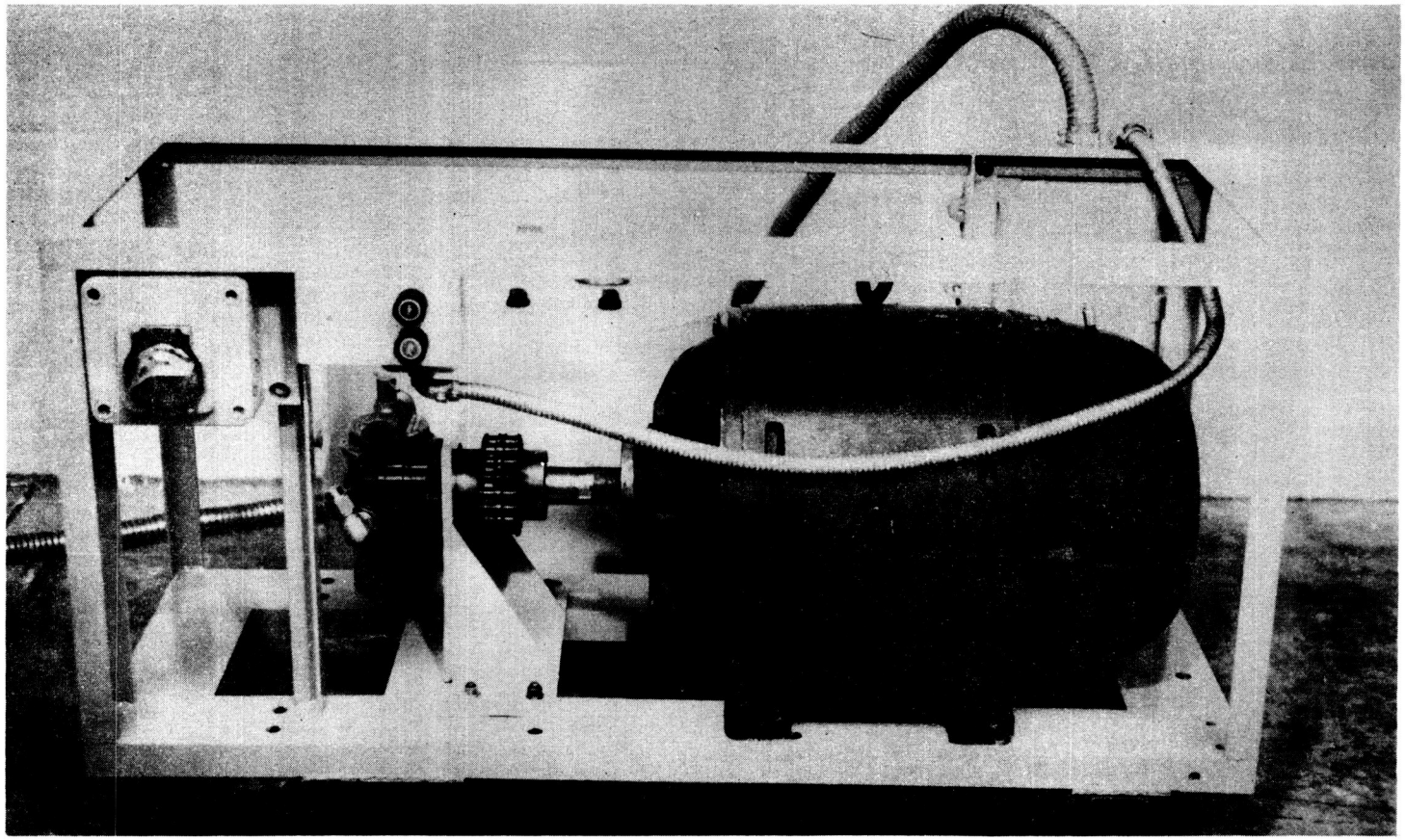

Figure 9 Power Supply

respectively. With an 80 foot pipe it should be possible to reach the second critical frequency with some fluids. For water the second critical frequency will be less than the peak rpm of the hydraulic motor and most of the fluids which we will be concerned with have sound velocities which are smaller than that of water.

The reason this particular experimental model was chosen is because it allows good control of the fluid velocity. Unsteady fluid velocities are very difficult to measure accurately but by knowing the oscillator driver amplitude and speed we have good control of the fluid velocity. Pressures, on the other hand, are not so difficult to measure with a good pressure transducer, so we will let pressure be our variable. By placing pressure transducers along the pipe, we can experimentally determine the amplitude ratio and phase angle between pressure and piston driving velocity. This data can then by used to partially check the analytical model. By varying the pipe length, diameter, thickness, and material and also the fluid we should be able to get a good indication of the accuracy of the analytical model. It should be mentioned that this basic unit might be varied in a multitude of ways to represent other models, such as putting restrictions in the line, having abrupt changes in cross-section, etc.

There are other important concepts which might be evaluated with the present experimental setup. For example, the generation and attenuation of the various velocity modes could be checked to see if it complies with the theoretical predictions. The oscillating piston should generate many of the higher modes and at the

relatively low frequencies the experiments will be performed, these higher modes will all attenuate within a short distance from the piston. This means there should be a considerably heating effect near the piston.

B. Approximate Effect of Tube Longitudinal Deflections

Some conduit systems of practical interest may involve time varying longitudinal deflections which may not be neglected. An exact analysis for such a case would involve solving the fluid equations and tube equations and setting their velocities equal at the tube wall. An approximate approach is presented here which is much less involved and should give good first approximation answers.

Let us consider now the case of a conduit as shown below:

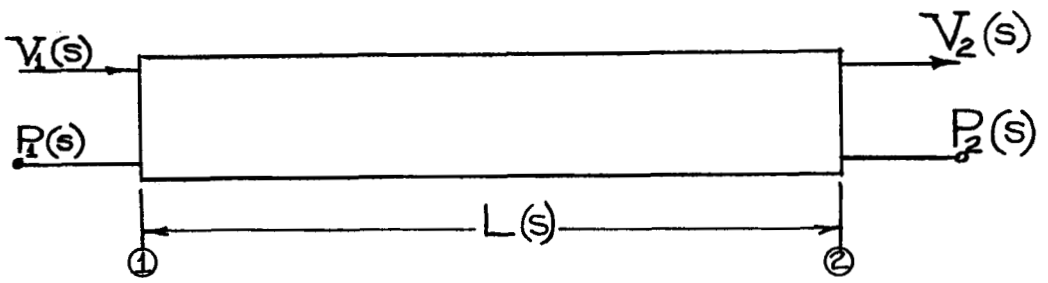

The length of the conduit is assumed to be changing with time (the conduit diameter remains constant). Assuming end (1) to remain stationary, we may write the transfer equations as

$$11)\quad V_2(s) = V_1(s)\cosh \Gamma_0 L(s) - \frac{P_1}{Z_0}\sinh \Gamma_0 L(s) - sL(s)$$

and

$$12)\quad P_2(s) = P_1(s)\cosh \Gamma_0 L(s) - Z_0 V_1(s)\sinh \Gamma_0 L(s).$$

If L(s) does not vary greatly from L_o, then we may further simplify by setting $L(s) = L_o$ in the hyperbolic functions.

C. A Homogeneous Model for Two-Phase Flow

Work has begun on the development of a transient, two-phase fluid conduit model with effort at first being placed on a simple homogeneous model. By homogeneous is meant that the concept of a fluid continuum holds and thus the governing equations of motion are valid for the homogeneous fluid mixture. In this analysis we assume the liquid flow to contain a uniform distribution of vapor or gaseous particles which are moving along with the liquid, with no slip between the phases.

The one-dimensional equation of motion is solved for each phase alone, thus obtaining a solution for the relationship between the velocity and pressure for each case. It is then assumed that the velocity for the mixture may be represented in the Laplace domain by

$$13) \quad U_T = U_L F + U_G (1-F)$$

where F is some function of the mass ratio of gas to liquid and also of S, the Laplace variable. Introduction of 13) into the equation of motion of the mixture gives an equation dependent on F. Solution of this equation yields the value for F.

This two-phase model represents the first step in the development of two-phase conduit transfer equations.

D. Effect of Phase Change on the Velocity of Sound

The effect of phase change, such as the formation of vapor bubbles, on the density and bulk modulus of the fluid has been discussed previously in Monthly Progress Report 64-3, Section III. As would be expected, the effect of the vapor formation is to make the fluid more compressible. Since the velocity of sound is dependent upon the fluid compressibility, there is a significant effect upon the sound velocity when a phase change occurs.

A recent survey of the subject has been given in reference (1). The material pertinent to the present study is summarized below.

> The velocity of sound in a liquid containing small amounts of vapor uniformly dispersed will be quite low, much lower than the velocity of sound in the liquid phase, and lower than the velocity of sound in the vapor phase. This is based upon the assumption of no slip, and thermodynamic equilibrium between the phases. The pressure is assumed to be low relative to the critical pressure.

The velocity of sound in a two-phase mixture can be calculated using the assumptions just stated and starting with the equation for a single phase.

14) $$c^2 = \left(\frac{\partial p}{\partial \rho}\right)_s = -v^2\left(\frac{\partial p}{\partial v}\right)_s$$ where v = specific volume, s = specific entropy

or $$c^2 = v^2\left(\frac{\partial s}{\partial v}\right)_p\left(\frac{\partial s}{\partial v}\right)_T\left(\frac{\partial T}{\partial s}\right)_v$$ See reference (2) pp. 342 & 343

In the two-phase region

$$\left(\frac{\partial s}{\partial v}\right)_p = \left(\frac{\partial s}{\partial v}\right)_T \quad \text{and} \quad \left(\frac{\partial s}{\partial v}\right)_p = \frac{s_{fg}}{v_{fg}}$$

thus

$$c^2 = \left[\frac{v}{v_{fg}}\right]^2 s_{fg}^2\left(\frac{\partial T}{\partial s}\right)_v$$

Using the definition of quality, X, and assuming that the specific volume of the liquid is much less than that of the vapor

$$15) \quad c = x\, s_{fg} \sqrt{\left(\frac{\partial T}{\partial s}\right)_v}$$

Thus, if temperature-entropy-volume data is available, the velocity of sound can be calculated for specified qualities. The velocity of sound in the two regions was calculated by Karplus (3) and is shown in Figure 10 below

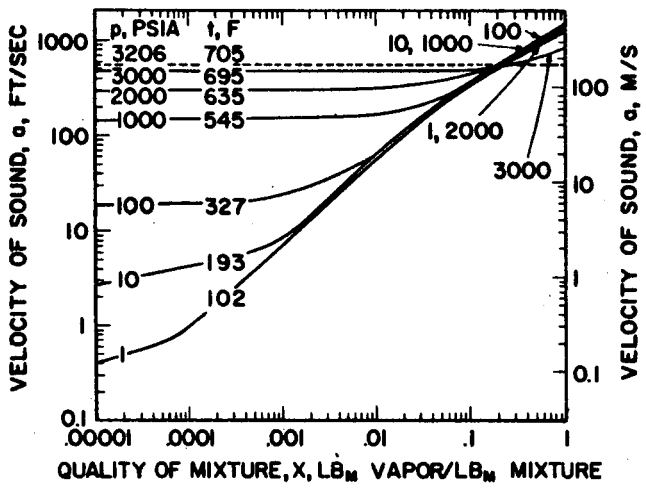

Figure 10

Velocity of Sound in Two-Phase Region for Water

It is particularly important to notice the low velocity of sound that occurs at low qualities such as in bubble flow.

If the vapor phase is present but not dispersed the velocity of sound will be lower than for the liquid phase alone, but not nearly so low as indicated by equation 15).

IV. Anticipated Progress

A. Experimental Investigation

The first set of tests will being on the newly completed test setup shown in Figure 1. Other experimental equipment is being designed to furnish information on the two-phase aspects of the problem. Two types of equipment are being considered and will be proposed in detail in the next monthly report. One proposed piece of equipment is a hydrodynamic tunnel suitable for studying cavitating flows of cryogenic and other fluids through components such as nozzles, orifices, bends and valves. The other proposed equipment is an observation chamber for the study of bubble growth and collapse.

B. Analog Models

Work will continue on the development of analog conduit models.

C. Mathematical Models

Work will continue on the development of transient one-phase and homogeneous two-phase conduit models.

REFERENCES

1. S. W. Gouse, Jr., and George A. Brown, "A Survey of the Velocity of Sound in Two-Phase Mixtures," A.S.M.E. Paper 64-WA/FE-35.

2. J. H. Keenan, "Thermodynamics," John Wiley, 1941.

3. H. B. Karplus, "Propagation of Pressure Waves in a Mixture of Water and Steam," ARF 4132-12, Illinois Inst. of Tech., January, 1961.