FEASIBILITY STUDY
PASSIVE LUNAR MARKER BEACON

FINAL REPORT

26 MARCH 1965

HUGHES

HUGHES AIRCRAFT COMPANY
SPACE SYSTEMS DIVISION

SSD 5147R

CONTENTS

	Page
1. INTRODUCTION	
Statement of Work	1-1
2. SUMMARY	2-1
3. TECHNICAL DISCUSSION	
3.1 Beacon Radar Requirements	3-1
3.2 Corner Reflectors	3-3
3.3 Van Atta Array	3-5
3.4 Bird Cage Reflector	3-7
3.5 Visibility Considerations	3-12
3.6 Environmental Model	3-23
3.7 Materials and Fabrication Processes	3-32
3.8 Materials Selection	3-36
3.9 Beacon Observation During Deployment	3-44
3.10 Beacon Deployment Mechanization	3-46
3.11 System Configuration	3-55
3.12 Preliminary Specification for Passive Lunar Marker Beacon	3-72
4. FUTURE EFFORT	4-1

1. INTRODUCTION

Presented herein is a summary of the work accomplished by the Space Systems Division of Hughes Aircraft Company during the 60 days of the Passive Lunar Marker Feasibility Study. This effort has been conducted in accordance with NASA contract NASA-3980 and the following statement of work.

STATEMENT OF WORK

Not more than ten percent of the effort will be used on optical considerations and the balance will be used on radar applications.

Task 1.0 Beacon Performance Requirements

1.1 Functional requirements shall be translated into definitive performance requirements for a combined RF and optical passive beacon. These performance requirements will include reflectivity of the devices, size, deployed volume or area, orthogonality requirements, and structural integrity.

Task 2.0 System Design

2.1 A preliminary literature survey shall be conducted to identify materials, material properties, impregnation methods, and fabrication processes which are probable candidates for the combined RF and optical marker beacons.

2.2 Based on the data acquired in Tasks 1.1 and 2.1, preliminary requirements definition studies shall be conducted to select the materials and processes which appear to be desirable candidates for satisfying the performance requirements.

2.3 Consideration shall be given to observation by the spacecraft imaging system of the ejection and deployment process.

2.4 Methods of separating the beacon from the Surveyor spacecraft or lunar roving vehicle and methods of ensuring proper beacon orientation shall be examined.

2.5 Parameterized data showing the relationship between size, lunar environment, and reliability shall be developed. The reliability effort shall also include preliminary analyses of different ejection methods and operational procedures which could improve the probability of success for the overalll mission.

2.6 and 2.7 Studies shall be conducted to develop alternate families of passive reflector and associated constraints. The reflectors to be considered are classified generally as RF corner reflectors whose overall shape may be either a portion of a sphere or an entire sphere. The reflectors have been modified as required to provide optical reflectivity. In addition a concept evaluation will be made to determine the applicability of a hollow spherical reflector (bird cage antenna).

2.8 and 2.9 Trade off studies shall be conducted to select a recommended preliminary design. These studies shall include an examination of the relationship between schedule, cost, weight, acquisition range, packaged volume, complexity, reliability, thermal control, and materials and material processes. Quantification of the weight, packaged volume, and reliability of candidate preliminary designs will be provided in the final report.

Task 3.0 Preliminary Specification

3.1 A final report shall be prepared consisting of a preliminary performance specification, supporting studies which justify configuration selection, and identification of areas requiring further study. The areas requiring further study will include those design parameters for which empirical data has not been developed through a materials test program and which may therefore require modification at a later time.

The beacon is required to meet the following general requirements:

1) Act in conjunction with the Apollo optics so that angle information may be obtained from lunar orbit at a slant range of 200 n. mi. (80 n. mi. orbit) with a 95 percent probability of successful acquisition.

2) Reflect a signal from the Lunar Excursion Module rendezvous radar (LEM R/R) so that full angular tracking accuracy is preserved at 20-n. mi. range.

3) Provide a 0.9 probability of successful survival on the lunar surface at the end of 3 years.

4) Weight and packaged volume should not exceed 12 pounds and 250 cubic inches. A design objective shall be 10 pounds.

A ground rule that Hughes has assumed has been to avoid the use of long lived active elements or components except those that may be required to initially deploy or orient the passive marker.

To provide continuity between the interim and final reports, the format in both reports is the same. Where no refinement of data was possible the same text is utilized to alleviate the necessity to refer to the interim report.

2. SUMMARY

Six general beacon configurations were examined during the study. These were:

1) A uniquely oriented single circular or triangular trihedral edge corner reflector.

2) Four corner reflectors arranged as a hemisphere.

3) Eight corner reflectors arranged as a sphere.

4) Bird cage echo enhancer.

5) Van Atta array.

6) Biconical corner reflector.

Each of these configurations has been modified by the addition of pigments or auxiliary optical beacons which provide a diffuse reflective surface for optical acquisition.

The radar beacon design has been the pacing item due to the difficulties encountered in satisfying the 20 nautical mile range and 12 db signal to clutter ratio requirement.

The most severe constraint has been one of providing a large enough radar target to compensate for cross section reduction when the beacon is viewed from a line-of-sight which varies from the reflectors axis of symmetry. This latter constraint is particularly severe for an omnidirectional reflector design similar to 2, 3, and 6 above. This accrues from the fact that a corner reflector cannot provide the radar cross section required for complete omnidirectional coverage without excessively large dimensions. For example, a 35 foot diameter four quadrant hemispherical reflector provides a 75 percent coverage at 20 n. mi. or a 90 percent coverage at about 12 miles. A beacon of this size would weigh approximately 52 pounds including the weight of the deployment mechanism. It can

therefore be seen that even if the range requirements are reduced the beacon weight is very large for a high probability of coverage. This configuration does have the advantage of simplicity of deployment. Each of the other systems except the uniquely oriented beacon are similarly limited.

The uniquely oriented beacon has the performance advantage of providing 100 percent coverage and being the overall lightest system. It has the disadvantage of being the most complex system considered. However, the complexity does not necessarily infer the beacon is unreliable. It is felt that this system can be designed to be consistent with the beacon reliability objectives. Therefore, it represents a recommended configuration.

It should be emphasized that due to the parametric nature and time duration of the study it was not possible to develop a complete set of system characteristics for the recommended design. Nor was it possible to examine each of the possible problem areas in great depth. Therefore, it is further recommended that the effort be continued and extended in order to include material, subscale and full scale model deployment and testing. A preliminary statement of work to accomplish this follow on effort is included in Section 4.

An interesting outgrowth of the study has been the conclusion that an independent optical beacon can be developed which is physically well within the weights and volumes specified by NASA/MSC. A brief description of the independent beacon is also included in Section 4.

3. TECHNICAL DISCUSSION

Task 1.0 Beacon Performance Requirements

1.1 Functional requirements shall be translated into definitive performance requirements for a combined RF and optical passive beacon. These performance requirements will include reflectivity of the devices, size, deployed volume or area, orthogonal requirements, and structural integrity.

3.1 BEACON RADAR REQUIREMENTS

Passive Lunar Beacon

Beacon Radar Cross Section Requirement

The required signal-to-clutter ratio for the beacon return has been specified as 12 db. The signal-to-clutter ratio is given by

$$\frac{S}{C} = \frac{\sigma_b}{\sigma_\ell} = \frac{\sigma_b G}{K 4\pi R^2} = 12 \text{ db}$$

where

σ_b = radar cross section of beacon

σ_ℓ = radar cross section of lunar surface

G = rendezvous radar antenna gain

R = vehicle to beacon range

K = reflectivity of lunar surface per unit projected area

The above expression assumes a signal modulation that is not range gated and with insignificant side lobe clutter.

Since the acquisition range and antenna gain are specified as 20 n. mi. and 32 db, the only other determinant of the beacon cross section is the radar reflectivity of the lunar surface. Three different models have been used to determine this parameter, each giving substantially the same result or -25 db. The three models are as follows:

1) <u>Lincoln Lab</u>

$$K = \frac{3}{5}\left\{ \exp\left[- \frac{\tan^2\psi}{\psi_o^2} \right] + \frac{\cos\psi}{50} \right\}$$

$$\psi_o = 0.355 \text{ radius}$$

for shallow angles

$$K \approx 0.012 \cos\psi$$

$$\cos 75 \approx 0.26$$

$$K = 0.003 \text{ (-25 db)}$$

The error associated with the above expression is +4 db, -2 db

2) <u>JPL/Hughes</u>

$$K(\psi) = \eta \left(\frac{0.36}{\sin\psi + 0.36 \cos\psi} \right)^3$$

$$\eta = 0.075 \text{ (best guess value)}$$

$$K(75°) = (0.075)(0.040) = 0.003 \text{ (-25 db)}$$

3) <u>Lambert Law (used in proposal)</u>

$$K(\psi) = 4r_o \cos\psi$$

$$r_o = 0.005$$

$$K = (25) = 0.005 \text{ (-23 db)}$$

The required radar cross section for a 12 db signal-to-clutter ratio is

$$\sigma = 9.6 \times 10^6 \text{ square feet for } K = 0.005$$

$$\sigma = 5.8 \times 10^6 \text{ square feet for } K = 0.003$$

The value chosen for the radar cross section is a rounded value of 10^7 square feet.

3.2 CORNER REFLECTORS

There are three basic corner reflector shapes: square sides, triangular sides, and circular sides.

The theoretical maximum cross section of each type is given by

Square Side

	normalized to	
$\sigma = \frac{12\pi a^4}{\lambda^2}$	$\frac{\pi a^4}{\lambda^2}$	10.8 db

Triangular Side

$\sigma = \frac{4\pi a^4}{3\lambda^2}$	1.2

Circular Side

$\sigma = \frac{16\pi a^4}{3\lambda^2}$	7.2

Corner Reflector Coverage

Although the circular sided corner reflector has 3-db less peak cross section it has a somewhat greater coverage in azimuth than the square sided reflector. The triangular sided corner is less efficient on both peak response and coverage. A corner reflector is not equally sensitive in all directions. It has a definite directional characteristic that depends on the shape of the component planes. A complete directional pattern calls for a three dimensional diagram. The composite surface is shown in Figure 3-1 with the specific curve relating to a reflector having triangular plane surfaces.

Comparisons of the overall coverage of corner reflectors is summarized in Figure 3-2.

Polarization effects

The LEM rendezvous radar employs circular polarization, which affects the beacon design in two ways. First, the size of the beacon is derived from the expected clutter level. These levels are based on experimental data obtained using linear polarization since data for circular polarization is not available. The surface reflectivity for circular polarization is not the

same as for linear polarization. The Radar Laboratory at Hughes Aircraft has performed a limited number of reflectivity experiments using circular polarization at K_a band. It was found that the reflectivity of the urban area and the hills surrounding Los Angeles were from 6 to 12 db less than 2 when linear polarization is used. The only other ground reflectivity tests that bear on this problem were a series of cross polarization tests performed at X-band. In these tests transmission was on either vertical or horizontal linear polarization and reception on the opposite polarization, that is transmit vertical and receive horizontal. Data for desert terrain showed the cross polarization reflectivity to be 6 db below that where transmission and reception were on the same polarization. In the absence of any other data 6 db or possibly 9 db less reflectivity will be assumed with circular polarization than with linear polarization.

Second, a corner reflector returns circular polarization of the wrong sense so that it cannot be received by the existing antenna. Two remedies are possible. The first is make one of the three surfaces of the corner reflector a series of parallel wires that will cancel one component of the circularly polarized wave. The wires will transmit rather than reflect the undesired component. The corner reflector will then reflect linear polarization with a 3 db loss which in turn will be received with an additional 3 db loss by the circularly polarized antenna.

Surface Irregularities

The effect of surface irregularities on the performance of corner reflectors can only be extrapolated from experience on parabolic reflector antennas. The following tolerances give the indicated gain losses when the correlation distance of the error is large with respect to a wavelength.

RMS Error	Gain Loss
$\frac{\lambda}{16}$	3.0 db
$\frac{\lambda}{40}$	0.5

Extrapolating to a corner reflector that entails three rather than one reflection, the tolerances should be increased by a factor $\sqrt{3}$ giving

RMS Error	Cross Section Reduction
$\frac{\lambda}{\sqrt{3}\ 16}$	3.0 db
$\frac{\lambda}{\sqrt{3}\ 40}$	0.5

Alignment Errors

The proceeding theory for corner reflectors is valid only if the angles between the reflecting planes are each 90 degrees. When one angle differs from 90 degrees, the triply reflected beam splits into two beams; when two angles differ there are four beams and when all three differ there are six divergent beams. Because the scattering back along the line of sight is of concern the reduction in cross section must be evaluated. Table 3-1 summarizes the signal strength loss due to these errors.

TABLE 3-1. SIGNAL STRENGTH LOSS

Type of Reflection	Line of Sight	Number of Errors	Type of Corner	Error to Reduce By		
				1 db,	3 db,	10 db,
Triple	Symmetric	One	Triangular	0.42λ	0.70λ	1.21λ
Triple	Symmetric	Three	Triangular	0.20λ	0.35λ	0.62λ
Triple	Symmetric	Three	Circular	0.18λ	0.33λ	0.60λ

It is essential to note that edge length is not a related parameter; therefore the longer the sides the greater the structural accuracy required.

Corner Reflector Coverage

The corner reflectors being considered for this application are so large in terms of a wavelength that the radar coverage will be essentially no greater than the optical coverage of a similar corner (Reference 3-1). Under these conditions the one bounce and two bounce reflections cover such a small solid angle as to be negligible. Hence, signal return near the planes of the reflecting surfaces will be too low to be of use and the return will drop below an acceptable minimum in some areas. Therefore, a probability of coverage must be established for the particular set of parameters being considered.

The hemispherical cluster of four circular edge corner reflectors was one design chosen for detail study. Of the three types of trihedral reflectors studied, it offers the best compromise between high signal return and broad angular coverage. Figure 3-1 gives the percentage of the hemisphere covered at various db levels below the peak return. This type reflector is discussed more thoroughly in paragraph 3.11.

3.3 VAN ATTA ARRAY

The Van Atta array consists of an array of discrete element radiators. Pairs of dipoles, slots, or spirals are connected in pairs as shown in Figure 3-3. The line lengths must be multiples of a wave length. A plane wave incident on the array is transmitted in the same direction as the incident wave. The incident wave and the time delay at each element is represented by

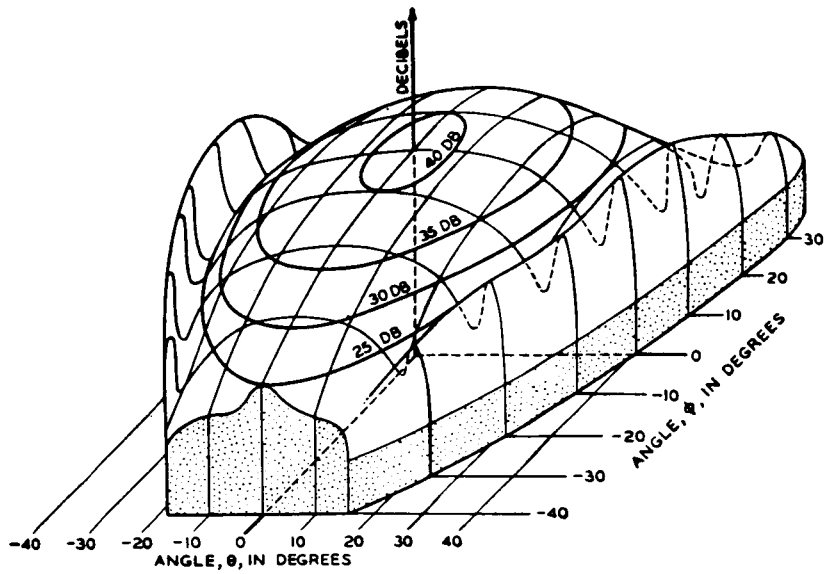

Figure 3-1. Composite Surface Representing Signal Levels Returned by Typical Corner Reflector

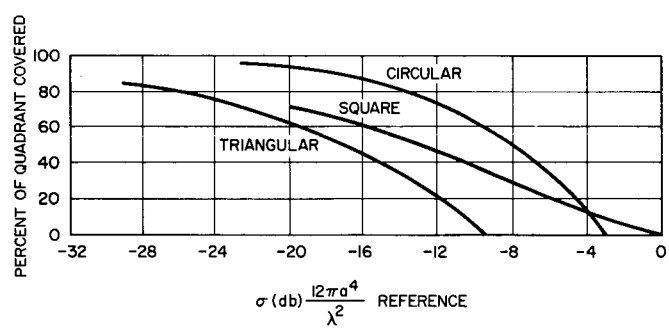

Figure 3-2. Corner Reflector Arrangement

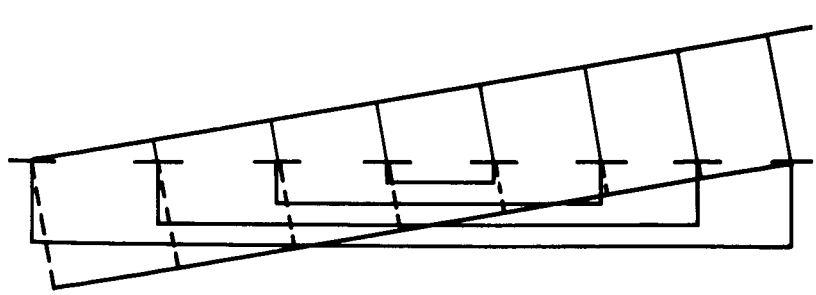

Figure 3-3. Van Atta Array Dipole Arrangement

a solid line; the retransmitted wave is represented by a dotted line. It is clear that connecting the elements as shown will cause the correct time delay to be introduced at each element for retransmission. The radar cross section of a Van Atta Array as a function of the angle of incidence is given by

$$= K \frac{4 A^2}{2} \cos^2$$

For scanning over a ±45 degree sector, the area has to be increased by 40 percent. For 360 degree coverage, four panels are required. Three panels can be used if the area of each panel is doubled. For a ±45 degree scan a 15 x 15 foot panel will give a radar cross section of 10^7 square feet.

The factor K in the expression for the cross section represents the loss of the transmission lines required to connect the elements. A strip transmission line to connect the elements was considered. The line considered had a loss of 6.5 db for the longest path; however it weighed 64 pounds. Reducing the size of strip line to 0.005 in mylar and using deposited aluminum resulted in a maximum loss of 87 db. The losses and/or weight of the transmission line appear to rule out the Van Atta array.

3.4 BIRD CAGE REFLECTOR

The surface of a bird cage reflector consists of a thin shelled dielectric sphere. Closely spaced wires are imbedded or printed on the surface. The wires are oriented so that they cross the equitorial plane at 45 degrees. Viewing the sphere along a diameter the wires on the front surface are at +45 degrees and the wires on the rear surface are at -45 degrees with respect to the poles. An electro magnetic field incident on the front surface can be resolved into two linearly polarized components, one parallel and the other perpendicular to the wires. The parallel component is scattered while the perpendicular component passes through the surface. The wires on the rear surface are parallel to the polarization vector of the transmitted component and act as a spherical reflector. The focal point is approximately a half radius away from the surface. If a cylindrical surface a half sphere radius in diameter is placed inside the sphere, the focused energy will be directed back against the spherical reflector and transmitted through the front surface. The sphere thus acts like an omnidirectional reflector in azimuth.

The polarization losses of the reflected fields as a function of the incident fields is as follows:

Incident Wave	Reflected Wave	Polarization Loss, db
Horizontal	-45 degrees linear	6
Vertical	-45 degrees linear	6
Circular	-45 degrees linear	6

Incident Wave	Reflected Wave	Polarization Loss, db
+45 linear	0	∞
-45 linear	-45 degrees linear	0

The efficiency of the bird cage reflector depends on the size and placement of the inner reflecting ring. The optimum size and placement has to be determined experimentally.

To confirm the data presented in the interim report a ray tracing study of the bird cage reflector was made to verify the statement made by Croney and Delany (Reference 3-1) that the cross-section would scale as the fourth power of the diameter. This ray tracing showed that there was not a circle of zero path length error formed by the intersection of the sphere with the plane $y = 2r - 4f$ as claimed by Croney and Delany. A close look at the geometry in their Figure 2 revealed that they had overlooked the fact that the angle made by the reflected wave with the normal to the surface was not restrained to be equal to the angle of the incident wave. Therefore, the size of the usable cap is not fixed at some percentage of the sphere regardless of diameter. Rather the path length error increases continuously with distance from the radar-reflector line of sight. Scaling up the size of the reflector would then also directly scale up the path length errors, which represent RF phase errors. Since the reflecting surface is no longer useful after phase errors exceed 90 degrees, the useful cap becomes a smaller and smaller portion of the total reflecting surface of the reflector as the sphere is scaled larger and larger.

It is known that the scattering cross sections of various forms of reflectors vary as given in Table 3-2:

TABLE 3-2. SCATTERING CROSS SECTIONS

Form of Reflector	Order of Curvature	Variation
Planar	Zero curvature	a^4
Cylindrical	Simply curved	a^3
Spherical	Doubly curved	a^2

Since the bird cage reflector uses a doubly curved main reflector it was assumed that it should scale approximately as a sphere. This is not to be construed as saying that the bird cage is not a better reflector than a simple sphere. It is much better. However, when scaling to a larger size it is believed that the proper method would be to scale from the measured cross section of the 2 foot sphere by the square of the ratio of the two diameters.

When the size of a bird cage reflector that would yield $= 10^7$ square feet was recalculated on this basis it turned out to be far too large to be considered for this application.

Biconical Reflector

A biconical type of corner reflector has been investigated. The biconical corner reflector is shown in Figure 3-4. The main advantage is the circular symmetry which yields full azimuthal coverage. The main disadvantage is the large size for a specified cross section. The following assumptions were made prior to calculating the size needed to give the required return signal:

1) There would be no polarization loss because this is a two-bounce reflector.

2) Tolerance loss has been set at 3 db rather than the 6 db used for the trihedral reflectors because the cone is readily adaptable to stretching to hold its shape. Furthermore, since the biconical reflector is a curved surface in one direction, phase errors are inherent in the reflected signal. This accounts for its small effective area compared to a plane surface. Hence, extremely tight tolerances are required only in the direction where the surface is not curved and in the 90 degree angle where the two cones meet.

3) Look angle loss has been set at 4-1/2 db. This derives from a tolerance of ±15 degrees for lunar surface slope plus 12 ± 5 degrees for the LEM approach angle. The 12 degrees is removed by tilting the centerline of the corner up 12 degrees, leaving a total angular uncertainty of ±20 degrees about the peak of the return. The data is taken from a curve of the vertical coverage of a biconical reflector published by Southworth (Reference 3-2).

4) It was assumed that the maximum effective area of the biconical reflector is 3-1/2 db below the maximum effective area of a cylinder of the same overall dimensions. Southworth says this ratio is about 1/2 for vertical polarization. Since the reflector contemplated is large in terms of a wavelength it will behave primarily as an optical device and will not discriminate against horizontal polarization. A preliminary investigation of this surface suggests that optically the effective surface would be exactly half the equivalent cylinder. This result is further supported because the cylinder and the biconical reflector are singly curved surfaces and the projected area of the biconical reflector is half that of the equivalent cylinder. Thus, the 3-1/2 db loss would represent a conservative assumption.

5) It assumed that tilting the angle of the reflector up 12 degrees would not appreciably affect its cross section, weight, or method of fabrication. Hence all calculations concerning radar performance (except for look angle loss), weight, and fabrication techniques are based on the conventional biconical reflector.

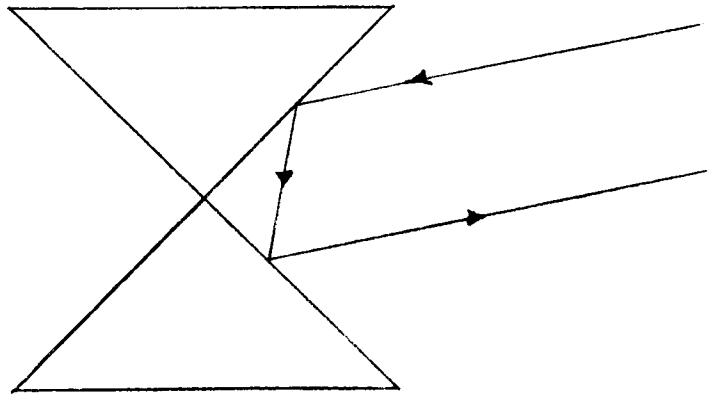

Figure 3-4. Cross Section of a Biconical Reflector

6) The reduction in background clutter by the use of circular polarization would be 9 db as was assumed for previous calculations.

Summarizing the losses and gains gives

Polarization loss in reflector	0 db
Loss due to tolerances	-3
Look angle loss	-4.5
Effective area compared to cylinder	-3.5
Tilting the angle of the 90 degree corner	0
Total losses	-11 db
Improved signal to clutter ratio by use of circular polarization	+9
Net loss	-2 db

The scattering cross section of a cylinder is given by

$$\sigma = \frac{2\pi ab^2}{\lambda}$$

or for a cylinder whose height is 2a

$$\sigma = \frac{8\pi a^3}{\lambda}$$

Reducing this cross section by 2 db for the biconical reflector yields

$$\sigma = 0.63 \frac{8\pi a^3}{\lambda}$$

Calculations for a when $\sigma = 10^7$ square feet yield a diameter and height approximately 80 feet each. This is too large to be considered; therefore, this design is not recommended.

3.5 VISIBILITY CONSIDERATIONS

Five factors were examined in attempting to evaluate the probable performance of a passive visual beacon as a navigational aid for the Apollo misssion. These were as follows:

1) Contrast available between diffusely reflecting materials and background.

2) Angle subtended by beacon which is determined by projected area and range.

3) Possible contrast attenuation by intervening media.

4) Adaptation brightness for observer.

5) Magnification and other optical transformations of telescope.

Contrast

Estimates of the contrast assumed solar illumination of the background and reflecting surfaces at the same angle from the normal. Since the sun is assumed to be between 15 and 45 degrees above the horizon, this assumption is correct for those surfaces that are parallel to the ground but may be somewhat pessimistic for those surfaces that are perpendicular to the ground. The background albedo was assumed to be 0.07, which is slightly higher than values for the lunar maria given elsewhere.

A lambertian diffuse reflecting surface is assumed for the beacon. Some white paints for spacecraft temperature control were artificially aged in a simulated space ultraviolet environment at Lockheed Missile and Space Company (LMSC). L. A. McKellar (Reference 3-3) reports that, after exposure, these paints had final albedos of from 0.41 to 0.73. To be safely conservative the assumption was made that the beacon would have an albedo of 0.41 yielding a contrast of 4.8. Higher contrasts are likely, since for the particular paint, darkening with ultraviolet exposure may have been caused by the carrier rather than the pigment and some inorganic pigments have albedos as high as 0.98.

Subtended Angle

Several of the beacon models investigated in the earlier parts of the study had dimensions based on radar requirements. The smallest of these, when viewed from the worst possible azimuth direction, had a vertical projected area of about 320 square feet. The maximum horizontal range for this view is less than 400 n.mi. since the line of sight to a satellite in an 80-mile orbit about the moon drops below the horizon at this range. As the line of sight elevates above the horizon, the projected area increases up to some angle near 45 degrees and then diminishes. The smallest projected area when viewed from directly above was only 225 square feet.

Since illumination will be from one side and with solar elevations between 15 and 45 degrees, the illuminated projected area diminishes as the observing satellite passes the vertical. With unfavorable orientations, the horizontal illuminated area may be completely obscured by the vertical beacon surfaces at an angle of about 135 degrees for the beacon model with triangular vertical surfaces and a circular base and at 120 degrees for those models with trangles or quarter circles for both the horizontal and vertical surfaces. With more favorable orientations the beacons may be observable through larger angles, in some cases nearly 180 degrees. The geometry is shown in Figure 3-5.

As the line of sight approaches the obscuration angles, the visible illuminated areas become quite small. However, the ranges also are quite small, about 90 miles at 120 degrees and 110 miles at 135 degrees. Thus, if the beacon is visible at the longest ranges without obscuration, a relatively small unobscured area should be visible from these shorter ranges, permitting tracking to within a few degrees of the obscuration angle.

Contrast Attenuation

The probability of haze at or near the moon's surface is negligible, so that there can be no contrast attenuation due to scattering along the light path.

Adaptation Brightness

The visibility of an object of a given subtended angle and contrast is a function of the brightness (luminance) of the scene to which the observer's eye has become adapted. Since the background will fill the field of view it was assumed that the adaptation brightness will simply be the luminance of the lunar maria attenuated by the transmittance of the telescope. Assuming Lambertian diffuse reflection, the sun high enough to obviate large shadows, an albedo of 0.07, and a transmittance of 5 percent, the luminance of the scene is about 35 foot-lamberts.

Magnification

The telescope through which the scene is to be viewed has a magnification of 28 and an entrance aperture of 1.58 inches. The effect of the magnification may increase the apparent area of the beacon by a factor of $(28)^2$ or decrease the apparent range by a factor of 1/28.

The Rayleigh limit for a 1.58-inch aperture, when magnified 28 times is about 1.6 minutes of arc for 0.55 micron light. Since the resolution limit of the eye is ordinarily about 1 minute of arc, it can be assumed that the telescope is limiting for resolution. A 20-foot diameter object will subtend the resolution limit at about 320 n. mi. The outline should become barely evident at about one-third this distance. No correction to the apparent scene luminance was made for the small exit pupil of this instrument since it is not known if this was accounted for in the specified transmission factor.

Expected Performance

By using the 320-square foot projected area of the beacon, a contrast of 4.8, and adaptation brightness of 10 to 100 foot-lamberts, and a magnification of 28, the range at which the beacon should be liminally visible was found to be about 1400 n.mi. by use of the Tiffany Foundation visibility nomographs (Reference 3-4). Infinite meteorological range, corresponding to no atmospheric scattering, was assumed. For 98 percent probability of detection, the liminal range for half the actual contrast was used and was found to be about 1000 n.mi.

Factors Causing Difficulty in Visual Beacon Identification

Surface Slopes

Consider two adjacent plane regions on a surface, one of which is tilted with respect to the other with a component of the tilt angle lying in a plane containing the direction toward the source of illumination. The illumination of that region whose normal made the smallest angle with the direction of the solar rays would be greater, and assuming reasonably diffuse reflection, that region would appear brighter to an observer.

If the surface is a Lambertian diffuse reflector of uniform albedo, the contrast can be shown to be independent of the direction to the observer, assuming that both surface regions can be seen and the relation satisfied is

$$C = \frac{\cos\left(\frac{\pi}{2} - \alpha - \delta\right)}{\cos\left(\frac{\pi}{2} - \alpha\right)} - 1 = \frac{\sin(\alpha + \delta)}{\sin \alpha} - 1$$

where α is the solar elevation angle relative to one of the regions, and δ is the component of the tilt angle of the other region in the plane containing α.

A graph of C versus α for various values of δ is given in Figure 3-6. For the limited range of α plotted, the curves appear to be asymptotic to $C = 0$. This is not true, however, since contrasts must go negative as the sun passes some point near the meridianal plane, or more exactly at $\alpha = \pi/2 - \delta/2$.

Figure 3-6 indicates that for the most probable slopes in the lunar maria, low contrasts are likely at solar elevations of 15 degrees or above. Regions with slope greater than a few degrees must be relatively small in area and even a 15-degree slope has a contrast of less than 0.93.

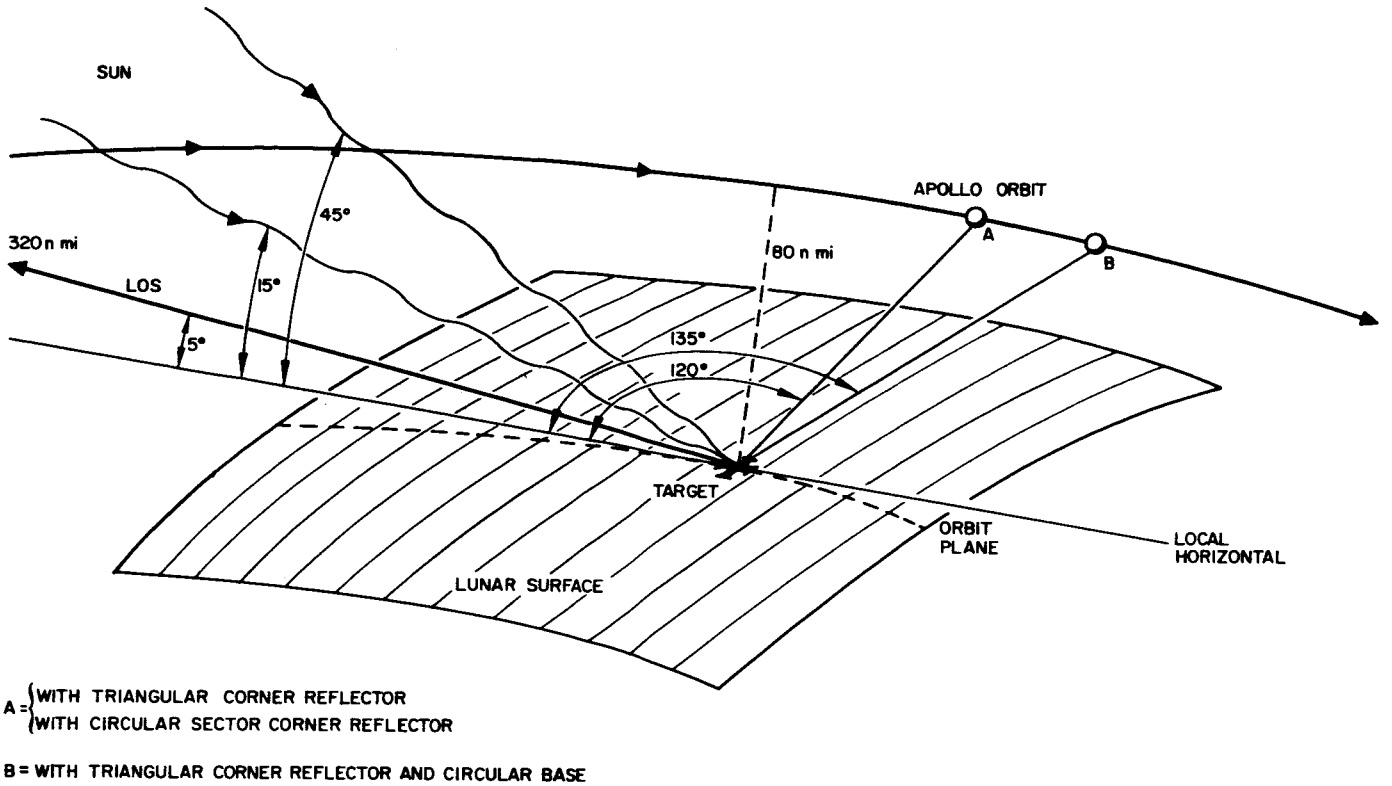

Figure 3-5. First Pass Line-of-Sight Geometry

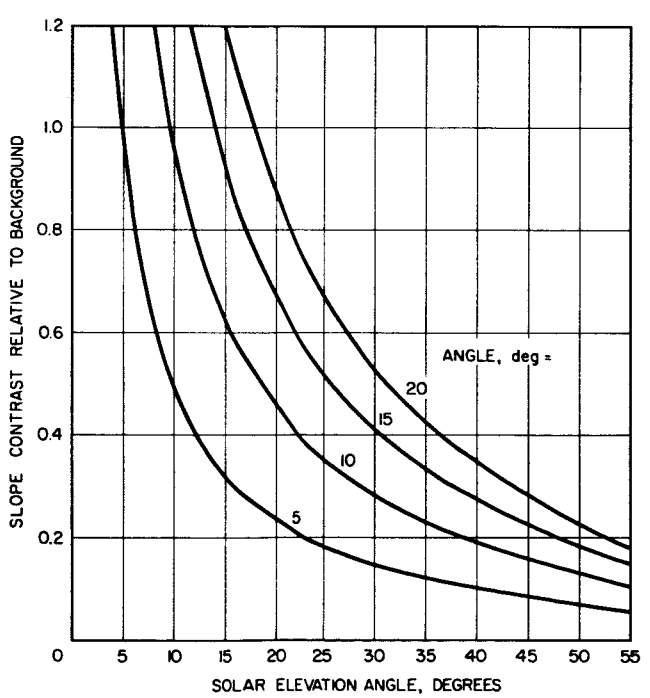

Figure 3-6. Contrast of Slopes versus Solar Elevation Angle
Various slope tilt angles toward sun

Effect of Resolution Limit

Let C' be the inherent contrast of an object of area a and brightness B_1 when examined against a background of brightness B_2. Then

$$C' = \frac{B_1 - B_2}{B_2}$$

Suppose the eye or some optical device integrates all the flux from one resolution element of projected area A at the objects range, R. Then the apparent contrast, C'', seen by the eye, assuming all adjacent resolution elements have the brightness, B_2 will be

$$C'' = \frac{aB_1 + (A-a)\,B_2}{AB_2} - 1$$

$$= \frac{a}{A}\,C'$$

If the resolution limit is set by the diffraction pattern of the entrance aperture, most but not all of the flux from the object points passes through the corresponding resolution elements in the image plane. Specifically, if A is defined by the projection of the circle whose diameter is defined by the Rayleigh angular limit, $1.22\,\lambda/D$, and if a is enough smaller than A to be considered a point source for practical purposes, then only about 84 percent of the flux from a passes through the central disc of the diffraction pattern, the remaining 16 percent passing through a set of concentric rings at considerably reduced intensity. This results in the apparent contrast being further reduced. Thus, the apparent contract, C, through a diffraction limited instrument with circular entrance aperture is approximately

$$C = 0.84\,\frac{a}{A}\,C'$$

where C' is the inherent contrast of the object whose area is a provided $a < A$ where

$$A = \frac{\pi}{4} R^2 \left(\frac{1.22\ \lambda}{D}\right)^2$$

and R is the object range, λ the wavelength of the light, and D the aperture diameter. For larger objects C approaches C' because of the overlapping of diffraction patterns of all points not at the boundary.

Discrimination Between Bright Points and Areas of Enhanced Contrast Caused by Slope

Ideally, a passive lunar beacon should be identifiable even when its projected area is too small to fill the diffraction limit of the viewing instrument. This is possible because the low albedos of the moon's surface, especially of the maria, and the high albedos achievable with various pigments make possible quite high inherent contrasts, of the order of 5 to 10.

For small objects, it was shown in the previous discussion that the apparent contrast must be smaller than the inherent contrast. To be distinguishable from other spots in the field of view with contrast enhanced by increased illumination of slopes facing the source of illumination, the remaining apparent contrast must exceed that of the slopes by a factor that is presently undetermined.

It is known that a minimally trained human observer can distinguish between point sources using less than a 10 percent difference in luminous flux (e.g., variable star observers who regularly estimate 0.1 magnitude differences). These distinctions are generally made under conditions of extremely low background brightness which would not be the situation at the site of the lunar beacon. Thus, it is suspected that it must take a difference appreciably greater than 10 percent in relative brightness or contrast to distinguish between two point sources. Yet, it does not seem likely that a difference of as much as a factor of two should be necessary.

Assuming the required difference in contrast lies between the above indicated limits, and assuming that the most difficult background spots are 15-degree slopes, that the range is 200 n.mi., the aperture is 1.58 inches, the ultimate albedo of the beacon is 0.6, the albedo of the moon's surface in the maria is 0.065, the probable required horizontal beacon projected areas are indicated in Figure 3-7 as a function of solar elevation angle.

In Figure 3-7 the square root of the projected area of the beacon normal to the line of sight is plotted against the solar elevation angle for three different assumed criteria. Curve I is for a beacon with 10 percent higher apparent contrast relative to the horizontal background than a slope of 15-degree inclination tilted toward the sun. It is highly unlikely that a passive beacon whose dimensions fall below this curve can be distinguished from such slopes if the latter have projected areas of 325 square feet or more. The actual area is 325 square feet to 595 square feet depending on viewing angle.

Curve II is for an apparent contrast twice as great as that of the competing slopes. Intuitively at least, this should be distinguishable from any competing slope since the apparent contrast of the slope remains constant if the area is appreciably larger than just the area needed to fill the Airey disc of the viewing instrument.

Curve III represents the level at which the beacon would have an apparent contrast of 1.0 against the expected background. This represents a very safe margin against a uniform background, being about 14 db above the level required for 98 percent probability of detection, based on the Tiffany Foundation data. A square projected area of 6.95 feet on a side or a circle 7.84 feet in diameter is required. A horizontal circle less than 16 feet in diameter would have the required projected area at viewing angles as low as 15 degrees above the horizon.

The above described curves are based on the relation

$$\sqrt{a} = \frac{R}{2}\left(\frac{1.22\lambda}{D}\right)\sqrt{\frac{\pi C}{0.84\,C'}}$$

where R is the range, λ the mean wavelength of light used, D the aperture diameter; hence $(R/2)(1.22\lambda/D)$ is the projected diameter in units of R of the Airey disc at the beacon's range. C is the required apparent contract, C' the inherent contrast of the beacon. For curve I, C was 1.1 times the contrast of a 15-degree slope (Figure 3-5); for II, C was 2.0 the slope contrast, and for III, C was 1 over the background. C' was 8.23.

Comparison of Horizontal Beacon With Specific Design

The previous arguments demonstrated that about 90 square feet of projected area normal to the line of sight and an albedo of at least 0.6 is needed for a horizontal lunar beacon to be clearly distinguished from the most severe background conditions at 200 n. mi. through the Apollo sextant. At a 200 n. mi. slant range corresponding to an 80 mile circular orbit, the line of sight is about 71.9 degrees away from the vertical. Therefore, the actual horizontal area required would be about 290 square feet.

Since the required area would go up very rapidly with adverse slope angle, such a horizontal beacon cannot be achieved practically if the probability of falling on a 15 degree slope facing away from the sun is high. A beacon with some vertical surfaces can overcome this problem as well as possibly reducing the nominally horizontal area required. Since a passive radar beacon made up of one or more corner reflectors already contains nominally (or nearly) vertical as well as nominally horizontal surfaces, the visual beacon problems can be solved by coating all or part of the surfaces with an appropriate pigment.

The problem is to determine the actual areas of the appropriately pigmented surface for a specific beacon configuration in extreme lighting and viewing orientations and in the appropriate regime of competing contrast areas.

The relation that will be used is that for equal apparent luminance, Two Lambertian reflectors have areas, A_1 and A_2, related by

$$\frac{A_2}{A_1} = \frac{\rho_1 \cos \alpha_1 \cos \beta_1}{\rho_2 \cos \alpha_2 \cos \beta_2} \tag{3-1}$$

where

ρ_i = albedo or reflectivity of ith surface

α_i = angle between normal to surface and direction of illumination (sun)

β_i = angle between normal and observer

At other ranges the above expression can be modified by noting that the required area is proportional to the square of the ranges, thus

$$\frac{A_2}{A_1} = \frac{R_2^2 \rho_1 \cos \alpha_1 \cos \beta_1}{R_1^2 \rho_2 \cos \alpha_2 \cos \beta_2}$$

If it is desired to find the vertical angle at which a given sized area is visible with the desired contrast, it is noted

$$R \cong h \sec \theta$$

where h is the altitude of the observer and θ is the vertical angle. If δ is the angle of tilt of the slope on which the beacon falls, then for the nominally horizontal beacon surfaces, $\beta = \theta \pm \delta$, the sign depending on whether the tilt is away from or toward the observer. Making these substitutions in the comparison expression above it is possible to numerically solve the following expression for θ;

$$\cos^2 \theta_2 \cos(\theta_2 \pm \delta_2) = \frac{A_1 h^2 \cos \alpha_1 \cos \beta_1}{A_2 R_1^2 \cos \alpha_2} \qquad (3\text{-}2)$$

where the subscript 1 refers to the standard surface and 2 refers to the comparison surface.

Hemispherical Four Sided Corner Reflector

Figure 3-15 shows one of the probable beacon configurations. The radar beacon consists of four corner reflectors fitted into a hemispherically bounded volume. The visual beacon consists of the square cap and pigmented areas on the vertical surfaces indicated by shading. It will be assumed that the hemisphere is 35 feet in diameter and the cap has 100 square feet of area. For the cases discussed in the following paragraphs, it was assumed that the cap is flat and parallel to the bottom plane.

Case I

The sun and the observer are considered to be on the same side of the beacon and in the same vertical plane. The sun elevation is at 15 degrees and the observers range is 200 n. mi. (18.1-degree elevation). From Figure 3-7, the projected area of a horizontal beacon must be 90 square feet; hence the standard beacon area is 290 square feet, α_1 is 75 degrees, β_1 is 71.9 degrees.

If it happens that the beacon (Figure 3-15) falls on a 15 degree slope facing away from the sun, the cap contributes nothing to visibility. If it is assumed that the beacon has fallen in such a way that the vertical surfaces make a 45-degree angle with the direction to the sun, the projected area of the vertical pigmented patches is minimum.

Using Expression 3-1, it can be shown that for visibility equal to that of the standard requires 33 square feet of vertical pigmented area or 16-1/2 square feet on each of the eight vertical areas.

Case II

The assumptions are the same as in Case I except the beacon is tilted toward the sun and observer. It is clear that the apparent total luminance must increase, while the luminance of the vertical sides diminishes approximately as the square of the cosine of the change in tilt and the top increases as the square of the sine. The top has a larger area; in fact, 85-1/2 square feet of the top cap alone would suffice.

Case III

The assumptions are the same as in Case I except that the sun elevation is at 45 degrees. Now the projected area of the horizontal beacon need only be 48 square feet to the observer; thus the standard beacon area, A_1, is only 155 square feet. The cap supplies negligible luminance. The required area on the vertical sides is 79 square feet or about 39-1/2 square feet on each of the eight vertical faces.

Case IV

The assumptions are the same as in Case II except the sun is at 45 degrees elevation. A_1 is the same as in Case III. The solution of Expression 3-1 shows 72 square feet of cap alone would be sufficient.

Case V

The assumptions for the sun and beacon are the same as in Case II, but the observer is on the opposite side of the beacon. It is desirable to determine the angle at which the beacon is as visible as the standard beacon at 200 n.mi. with a corresponding observer elevation angle of 18.1 degrees.

Solving for θ in Equation 3-2 yields an angle of about 19 degrees. Thus the total vertical angle is little more than 90 degrees. This result is unduly pessimistic even for the adverse conditions since 1) the top cap will sag somewhat and 2) the implied contrast is greater than necessary as predicted by the Tiffany Foundation data especially since this case occurs after the beacon presumably has been acquired and tracked continuously for several minutes under initially favorable conditions. A case can be made for sufficient contrast to track to as much as 50 degrees past the vertical in this situation.

Case VI

It is desirable to find the vertical angle as in Case V with the assumptions for the sun and beacon the same as in Case I.

Since the cap is not illuminated at all in this case, there is a small probability of seeing the beacon much past the vertical. Therefore Case III sets the minimum value of pigmented vertical surface area at about 40 square feet per face. The 100-square-foot cap takes care of all other situations where it is possible to get good range and angular coverage with a visual beacon containing only perpendicular plane surfaces.

Uniquely Oriented Corner Reflector

For the uniquely oriented radar beacon consisting of a single corner reflector tilted 20 degrees toward the expected direction of the LEM landing

trajectory, identical analysis to that of Case III shows that the inner faces of each of the two nearly vertical surfaces require about 50 square feet of pigmented area. A top cap should be included to provide for visibility when the sun is on the opposite side of the beacon from the observer, i.e., where the visible vertical pigmented surfaces are not illuminated. To guarantee tracking through a wide angle on either side of the vertical, this top cap should be at least 100 square feet in area and deployed in such a way as to remain within 5 degrees of horizontal.

An alternative to the top cap would be two or more separately deployed flat beacons rolled out on the lunar surface near the radar beacon. These beacons should be about 100 square feet each in area. Two or more beacons should be used to reduce the probability of a single beacon falling on a 15-degree slope facing away from the sun which would be invisible when the elevation of the sun is 15 degrees, and to reduce the probability of a beacon falling where it would be shaded or obscured by the radar beacon. The two beacons should be deployed within about 50 feet of the radar beacon.

In addition to easing some of the deployment problems, the separate horizontal beacons ease the problem of pigmenting the vertical surfaces of the radar beacon, since it is unnecessary to locate the pigmented areas where they will not be shaded or obscured by the top cap. Depending on the properties of the pigmented plastic or paint used and the materials used for the radar reflecting surfaces, it may be desirable to apply the pigmenting in the form of a uniform polka dot or mesh pattern or in the form of broad stripes adjacent to the corner posts.

3.6 ENVIRONMENTAL MODEL

The overall reliability of the passive beacon to provide a satisfactory target after 3 years on the moon's surface is a direct function of the environment. The type of materials used in the construction and reflecting surface materials are a function of the environment. It cannot be over emphasized that a satisfactory model of the environment is essential to the success of a passive beacon system.

The complete environment has been established from many sources of information (References 3-6 through 3-14). The data include the preliminary results from the Range 7 and 8 photographic observations.

Albedo

Optically the surface of the moon is observed as a source of diffuse reflected radiation. It is diffused by the nature of the surface material and not by any possible atmospheric content. The variation of the reflective properties of the lunar surface in the visual spectrum are as follows: (Reference 3-6)

Dark plains (maria)	0.065
Brighter plains (paludes)	0.091
Mountain regions (terrai)	0.105
Crater bottoms	0.112
Bright rays	0.131
Brightest spot (Aristarchus)	0.176
Darkest spot (inside Oceanus Pro)	0.051

Bright spots around the maria are about 0.12 and 0.15. The same colors probably exist for small rays surrounding craters that fall below optical resolution. If colors exist, they are very faint with the surface generally in various levels of gray.

Thermal

The extreme changes in the surface temperature on the moon are shown in Figure 3-8 . These vary from a maximum of 390°K at the lunar noon to a minimum of 80°K at the lunar midnight. These values vary slightly, perhaps 10 percent, as a function of the selenographic latitude. Since the passive beacon is to be located near the equator the latitude effect need not be considered.

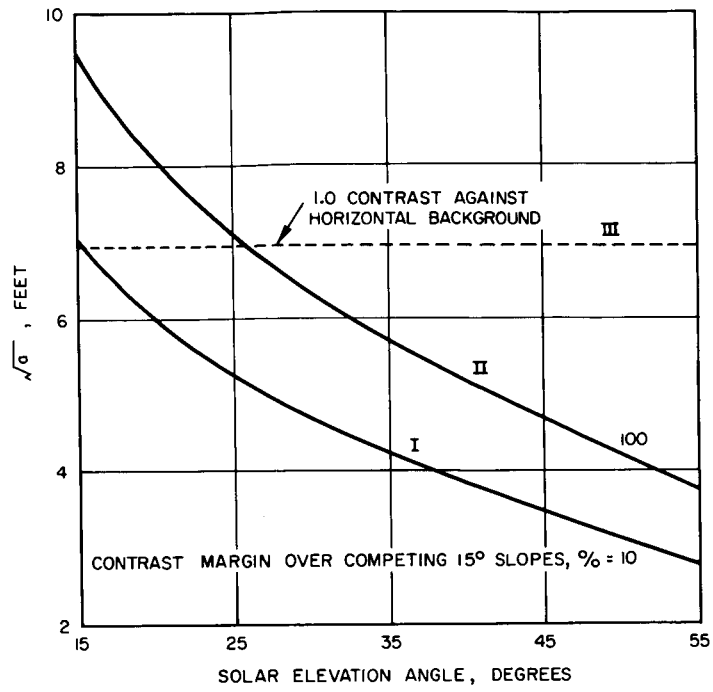

Figure 3-7. Visual Beacon Dimensions versus Solar Elevation Angle
Range = 200 n. mi. Telescope aperture = 1.58 in. Albedo = 0.6
Several possible discrimination criteria

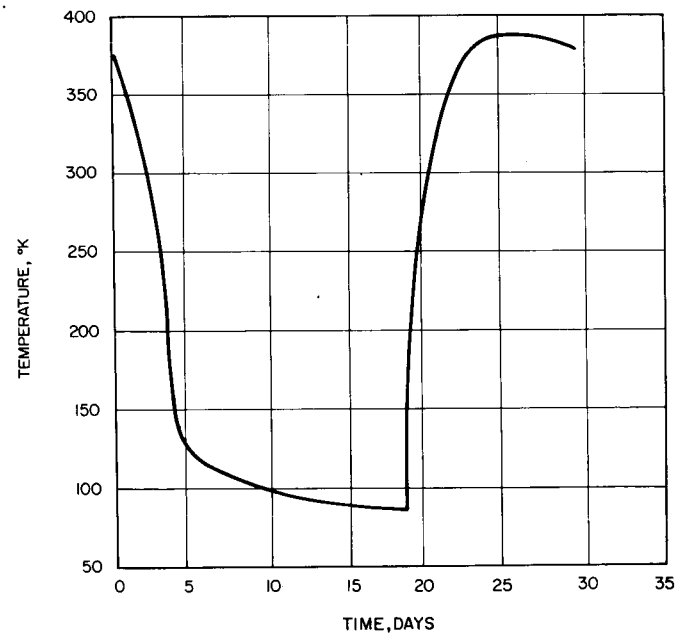

Figure 3-8. Temperature Variations over 1 Lunar Day

Cosmic Dust

One of the more troublesome environmental parameters is the continuously bombarding cosmic dust originating from within the solar system and a secondary particle that originates from the impact of the primary particle on the lunar surface. The distribution of meteoritic material in the vicinity of the moon is shown in Figure 3-9 and constitutes the flux of the primary particle. These data have been measured near earth particularly in the region of mass values of less than 10^{-10} grams. In outer space the flux may be reduced by 10^2 to 10^3 times. However in the vicinity of the moon, the same flux as measured near earth is used.

The secondary particles generated differ from the primary particles in that the velocity imparted is 1/10 that of the primary particles and the total mass of the ejected material is 10 to 10^2 times that of the primary particle. This is on dust coverage of the passive beacon surfaces.

Fields and Radiation

The magnetic fields and the radiation environment are as follows:

Magnetic Field

Experimental evidence indicates a field on the order of 10^{-3} gauss. The solar magnetic field is less than 10^{-3} gauss even with the presence of solar flare plasma clouds or torques.

Electromagnetic Radiation

Solar constant		1.39×10^{-6} ergs cm^{-2} sec^{-1}
	or	1.39×10^{-5} lumins m^{-2}
X-rays		$\lambda = 1 - 10$ Å
Quiet sun		10^{-8}-10^{-3} ergs cm^{-2} sec^{-1} $Å^{-1}$
Active sun		10^{-6}-10^{-2} ergs cm^{-2} sec^{-1} $Å^{-1}$
γ-rays		$\lambda < 1$ Å
Quiet sun		$< 10^{-8}$ ergs cm^{-2} sec^{-1} $Å^{-1}$
Active sun		$< 10^{-5}$ ergs cm^{-2} sec^{-1} $Å^{-1}$
Ultraviolet		$500 < \lambda < 3000$ Å
		5 ergs cm^{-2} sec^{-1} $(Å)^{-1}$

During the lunar day extreme temperature variations exist before and after the lunar noon. The temperature can drop to 120°K in the shadows formed by crater rims, jagged rocks, or other protuberances. However, this is not as extreme as the midnight temperature.

Since no direct measurements have been made, the thermal properties of the lunar surface are based on a speculative estimation. Two surface material models have been considered, which based up combined indirect IR and RF measurements.

Material A: K (thermal conductivity) = 6×10^{-6} cal cm^{-1} sec^{-1} $(°C)^{-1}$

ρ (density) = 0.9 gm c^{-3}

c (specific heat) = 0.2 cal gm^{-1} (at 25°C)

Material B: K = 4×10^{-3} cal cm^{-1} sec^{-1} $(°C)^{-1}$

ρ = 3.0 gm cm^{-3}

C = 0.2 cal gm^{-1} (at 25°C)

Local surface materials may exist with thermal properties similar to those of an infinite layer of material A (extreme insulating model) or an exposed layer of material B of infinite thickness (extreme conductivity model).

Surface Structure

The lunar surface is relatively free from large rocks and protuberances in excess of 10 cm. Roughness is generally of the millimeter size when the visible surface begins to make itself felt. However, occasional boulders 1 to 100 meters in dimension exist. This was further confirmed by photographs from Ranger. Generally the surface consists of sand, gravel, or cobblestone-sized fragments overlaying a possible frothly rock substrate of very low bearing pressure.

The estimated bearing strength of the surface structure is as follows:

1) Static - a static load of 1 psi will penetrate no more than 10 cm below the surface.

2) Dynamic - A dynamic load of 12 psi will penetrate no more than 30 cm below the surface.

One other surface feature that may exist is the possibility of a dust cushion about 1 meter thick on the sunlighted side of the moon. The cushion consists of particles of about 10^{-5} grams or less. Photoionization of the loose surface dust particles develops charges in each particle of the same sign; thus, the particles remain in suspension by electrostatic repulsive forces.

	Particle Radiation
Solar flare	1966 to 1969
	virtually no shielding
	1.6×10^{13} protons cm^{-2} for $E > 0.2$ Mev
	1967 to 1970
	1.8×10^{13} protons cm^{-2} for $E > 0.2$ Mev
Solar wind	for a 3-year period
	3×10^{7} to 3×10^{8} protons cm^{-2} for $2 < E < 20$ Kev

Minor Environmental Considerations

Two additional environmental conditions are the presence of an atmosphere and the possible presence of an ionsphere. Neither of these have much effect on the overall design of a passive beacon but do contribute to the completeness of the model. The atmosphere has been skeptically measured and theoretically calculated to be between 10^{-10} and 10^{-13} millimeters of Hg. The composition is presumed to consist of the inert gaseous elements of Krypton, Xenon, and Radon. Because of the direct effect of high energy electromagnetic radiation on the lunar surface materials and some low level gases, there is a possibility that a sheath of electrons exists close to the ground forming a lunar ionosphere. It has been estimated that this ionosphere contains about 10^4 electrons cm^{-3}.

Erosion of Passive Beacon

The environment used in this study is shown in Figure 3-9 based on data obtained in terrestrial space. Particles have been measured with a mass as low as 10^{-16} gram with very high flux traveling at speeds between 10-30 km sec^{-1}. According to the data the flux of particles at this mass is approximately 0.1 mm^{-2} sec^{-1}.

Each particle as it strikes the surface dissipates its kinetic energy in the forming of a small crater that is estimated to be about three times the diameter of the particle for speeds of 10 to 30 km sec^{-1}. The crater depth or penetration of the particle is an indication of the depth of erosion into the target material. An expression for the penetration (devised by Locke) is

$$\frac{P}{d} = 2.28 \left(\frac{P_p}{P_t}\right) \left(\frac{V}{C}\right)^{2/3} \qquad \text{(Reference 3-10)}$$

where

P = penetration

d = diameter of particle

ρ_p = density of particle

V = velocity of particle

ρ_t = density of target material

C = speed of sound in target material

A particle with a mass of 10^{-16} grams has a maximum dimension of about 10^{-5} cm. Using the previous equation and the characteristics of plastic ($\rho = 1.4$ gm cm^{-3}) and aluminum, the penetration per impact was determined. The depths were about 0.1 micron for the aluminum and about 0.4 micron for the plastic.

The time to obtain a given depth of erosion is based on the size of crater obtained and the number of craters required per unit area; in this case 1 mm^2. A crater 3×10^{-5} cm in diameter has an area of about 8×10^{-10} cm^2 or approximately 10^{-7} mm^2. This means that it would take 10^7 particles of the 10^{-5} cm size to erode 1 mm^2 of surface one penetration depth. At a particle flux of 0.1 mm^{-2} sec^{-1} it would require a time of 10^8 seconds or about 3 years. The results are listed in Table 3-3 for the aluminum and plastic for particle velocities of 10 and 30 km sec^{-1}.

TABLE 3-3. EROSION DEPTH OVER 3-YEAR PERIOD

Target Material	Particle Velocity	
	10 km sec^{-1}	30 km sec^{-1}
Aluminum, $\rho = 2.7$	0.1μ	0.2 μ
Plastic, $\rho = 1.4$	0.4μ	0.8 μ

At the end of this 3-year period the entire surface of the target would be eroded to the depth shown. There will be some holes made by larger meteorites, e.g., for particles of sufficient size to pass completely through the target material ($d = 5 \times 10^{-3}$ cm) there would be around 3000 holes 0.1 mm in diameter per square meter. Other particles will cause the amount of erosion to vary across the target surface.

Dust Coverage of Beacon Surfaces

The meteoritic particles that cause erosion of passive beacon surfaces also stir up surface particles (secondary particles) that can fall onto the surfaces and can cling to the surfaces because of the high vacuum and the electrostatic potential between the beacon material and the lunar surface material. Even primary particles that impact the lunar surface a great distance from the beacon can provide some low energy secondary particles that fall on the beacon surfaces.

Assuming the same primary particle mass and flux as used for estimating the extent of surface erosion, the characteristics of the secondary particles are assumed to be as follows:

- Total mass of the affected particles (secondaries) is from 10 to 10^2 times the mass of the primary particle.
- Velocity of the ejected particle is about 0.1 that of the primary particle.

If it is further assumed that the ejected particles have the same individual mass as the primary particle, the flux of the secondary particles is from 10 to 10^2 times the flux of the primary particle but at 0.01 the energy. Specifically, the secondary flux is then from 1 to 10 particles mm^{-2} sec^{-1}. Not all of these particles will land over a specific region; some generated particles will escape, particularly those in an upward direction. Even particles from completely around the moon could conceivably land in the specified area.

All secondary particles having a velocity component in excess of the escape speed of 2.5 km sec^{-1} and in a direction about the local horizontal will escape. All particles less than this speed will fall back somewhere on the surface. This could mean that the lunar atmosphere would have a large number of dust particles flying around except for the fact that they are directed in their trajectories by the solar wind and light pressure and stopped by high mountains and ridges. For the purposes of estimating the amount of coverage, two extreme conditions will be considered. First, only 1 percent of the secondary particles return to the surface; and second, 100 percent of the particles return to the surface. Using the assumptions previously mentioned, the percent of the beacon surface covered as a function of time was determined. The results are

shown as Figure 3-10. Even for the worst possible condition, the amount of the surface covered to a depth of 10^{-5} cm is about 14 percent. This would not be the realistic value. The curve for a 1-percent return of the secondary particles shows that the coverage is small for a 3-year period.

These values must be modified to include the effects of the vacuum and electrostatic environment. The effects of the vacuum primarily cause the particles to adhere to steeply inclined surfaces and would not affect the rate of accumulation. However, the electrostatic potential difference can effectively increase the flux of the ejected lunar materials.

Photoionization of a given material is a function of the total atomic cross section and the number of atoms per gram of the material. The only concern with respect to the passive beacon system is the difference in the number of ejected electrons gm^{-1} of the beacon material and the lunar surface material.

The total cross section, $\bar{\sigma}$, is a function of the following:

$$\bar{\sigma} \alpha \frac{I^4}{Z2}$$

where I is the ionization energy and Z is the atomic number.

Using typical values of I and Z for the beacon plastic material and the lunar surface material, the difference in ionization is about a factor of 10. This would indicate that the electrostatic charge would be 10 times the equivalent lunar area. The electrostatic field difference thus developed would attract small dust particles which are also slightly charged by the photoionization process. This can be interpreted as a potential increase in the secondary particle flux. The percent dust coverage of the beacon surface is modified by a factor of 10 and is shown in Figure 3-10 as the dashed curve.

Radiation Degradation

The 3-year service life requirement for the passive beacon prior to the Apollo landing places the beacon on the surface of the moon during the upper portion of the maximum solar sunspot cycle. The extreme solar flare activity produces an intense proton radiation environment that could conceivably degrade the structural properties of the materials used in the passive beacon. From solar flare studies made at Hughes, the estimated proton dose listed in the environmental model, the absorbed dose in the plastic materials is estimated to be about 10^4 Rads (c). This is increased by 5 percent by the ever present X-ray, γ-ray radiation and secondary radiation from the lunar surface. The majority of the plastic materials considered have threshold absorbed radiation levels from 10^7 to 10^8 Rads (c) before any deterioration takes place in a vacuum. With the presence of a trace of oxygen, the threshold dose decreases to about 10^4 Rads (c).

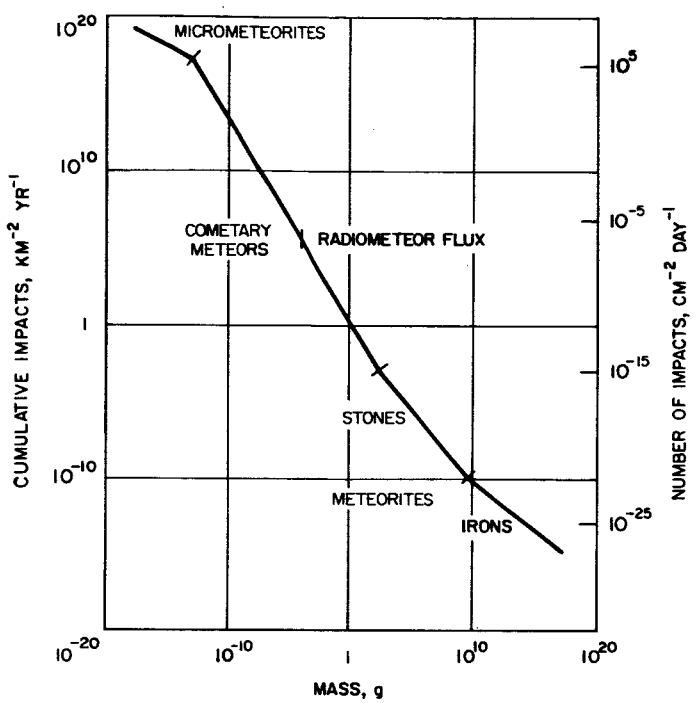

Figure 3-9. Frequency of Meteoritic Objects of Different Mass in Space

(after Hawkins, 1963)

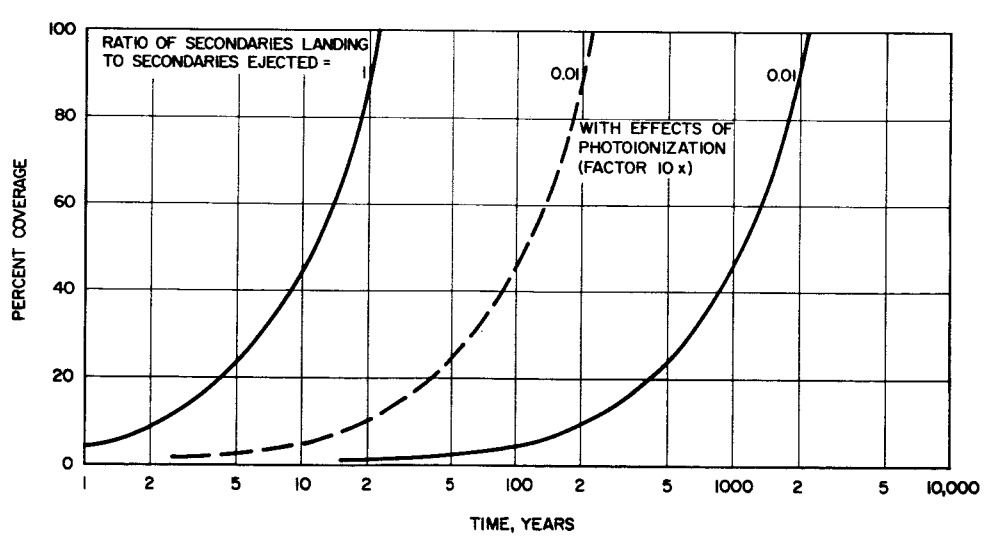

Figure 3-10. Time for Flat Surface to be Covered with Dust to Thickness of 0.00001 cm (0.1 μ)

Task 2.1. A preliminary literature survey shall be conducted to identify materials, material properties, impregnation methods, and fabrication processes which are probable candidates for the combined RF and optical marker beacons.

3.7 MATERIALS AND FABRICATION PROCESSES

The materials and fabrication processes under investigation are those associated with the production of a large, light weight, inflatable structure. After expansion the structure will be radar and/or optically visible for at least 3 years in the lunar environment. The general configuration will utilize a sphere or hemisphere and/or several tori or inflated tubes for erection of the reflector surfaces, and rigidization of the tubes or tori to ensure permanance in the expanded shape after loss of pressurization. Because of the optical visibility requirements, the reflector surfaces will utilize special coatings over metal mesh surfaces. The objectives of this project include the following:

1) Investigation of light weight, flexible film materials with adequate lunar environment resistance.

2) Investigation of coatings or additives which, when applied to the films, would result in the required optical and radar reflective properties.

3) Investigation of rigidization systems for the expanded structure.

4) Investigation of methods to fabricate the required structure.

5) Estimates of the alignment accuracy of the completed structure.

Environmental Factors

In any investigation of materials for space usage possibly the first consideration should be the stability of the materials in the space environment. The lunar environmental factors that the beacon materials must resist are as follows:

High vacuum (10^{-10} - 10^{-12} mm Hg)

Temperature extremes ranging from approximately +250 to -300°F

Ultraviolet radiation, at a flux considerably greater than on earth

High energy particle radiation

Micrometeorite erosion

A large amount of effort has been expended in the last few years to determine the effects of these various factors on many types of materials, including various plastic films and coatings. A literature search was therefore made to assemble the data pertinent to this project.

Vacuum

All materials volatilize to some extent in a high vacuum. However, in the case of long chain polymeric materials, the vapor pressure of the basic macromolecule is usually not great enough to be of significance, except possibly for a few short chain terminal groups. The only appreciable weight changes that might come about would be from degradation of the polymer, to short chain lengths, or loss of plasticizer. Since only nonplasticized materials will be considered for long term usage, plasticizer loss is not a factor. In polymer degradation caused by vacuum most materials suitable for high temperature use would inhibit weight loss. This includes all the common thermosetting materials, such as polyesters, expoxies, silicones, polyethylene terephthalate (Mylar), etc. Also included are unplasticized thermoplastics such as polyethylene, polypropylene, and nylon. It should be noted, however, that these observations are based on the results of relatively short term tests; i.e. approximately 2000 hours maximum. Extrapolation to much longer periods may not be reliable since degradation in most cases takes place exponentially.

Thermal Effects

As given above the lunar thermal extremes range from approximately +250° to -300°F. In general no deterioration occurs as the result of the low temperatures, other than possible side effects from thermal expansions and contractions. However, elevated temperatures increase weight loss and the rate of degradation. It is not possible to utilize the Langmuir equation to accurately estimate the extent of weight loss of polymers, since these normally do not degrade and vaporize into a gas phase, but rather are reduced into shorter chain fragments which are lost in the vacuum. The degradation (and mass loss), while temperature dependent, is also affected by ultraviolet and ionizing radiation. Therefore, it is extremely difficult to make definite predictions of the weight loss of any polymer. It is possible by maintaining the material at low temperatures to minimize the losses. In some cases this low equilibrium temperature is an inherent property of the polymer, and in others a coating or treatment is required to assure a low $\frac{\alpha}{\epsilon}$ ratio. In any event high temperature resistant, thermosetting materials would always be considered the better materials for resistance to the thermal effects.

Ultraviolet Radiation

Probably the most damaging environmental factor for thin polymeric substances is ultraviolet radiation from the sun. It is presumed that this effect is as pronounced on the moon, during the lunar day , as it is in any other part of space. The ultraviolet radiation which is expected on the moon includes radiation from 1000 to 3000 Å. Wavelengths from 1000 to 3000 Å

have the highest energy of the ultraviolet spectrum. The effects produced by the ultraviolet radiation are also accelerated by the accompanying absorption of infrared radiation which causes a heat rise. The resultant effects could be of four types: 1) random chain breaking 2) crosslinking, 3) breaking off side chains, and 4) unzippering or shortening of the chain by scission. This last effect is most noticeable on thermoplastic materials such as polyethylene and polypropylene which therefore possibly precludes their use in this application. On the other hand, unprotected Mylar exposed to ultraviolet radiation rapidly turns brown and embrittles. The same effect has also been reported for metallized Mylar over a longer period of time.

Unlike infrared rays ultraviolet and visible radiation do not easily penetrate material. Therefore inclusion of a surface coating such as metallizing or an opaque paint would serve to protect the film. On the other hand the coating would have to be one which was relatively stable under the effects of the ultraviolet radiation, and it would have to have an $\frac{\alpha}{\epsilon}$ ratio that would maintain the surface at a relatively low temperature.

Particle Radiation

High energy particle radiation can not be as easily shielded as ultraviolet. The particle radiations (protons, electrons, and neutrons) produce either ionization or excitation of the molecule. Three processes can occur: chain scission, polymerization, and crosslinking. Generally all three processes take place simultaneously, with one process predominating. The effects of the chain scission are to cause the polymer to soften and degrade badly. Polymerization and crosslinking, if not carried too far, actually can be beneficial causing increases in strength and rigidity. The presence or absence of oxygen has a large effect on the final results of these tests. Unfortunately, the great majority of the tests were not conducted in vacuum. Mylar, polyimides, fluorocarbons, and some nylons appear to be the best of the nonfilled plastics. Thermosetting resins, such as phenolics, polyesters and epoxies, when combined with fillers such as glass fibers, appear to have adequate resistance in this regard.

Micrometeorite Erosion

The data on micrometeorite erosion is probably the most controversial because of lack of uniformity. Nevertheless, it may be concluded that micrometeorite erosion will not be a problem to the polymeric materials because 1) the materials will be thick enough to resist the erosive effects of micrometeorites and 2) the outer thermal radar and/or optical coatings will withstand most of the damaging effects (References 3-15 through 3-21).

Summary

An attempt to summarize the literature data (sometimes conflicting, and all of it based on relatively short time duration) is shown below (References 3-22 and 3-23).

Film Materials

The following materials are suitable as a base for reflector surfaces.

Mylar. Mylar, when sufficiently metallized, remains one of the most attractive film materials; however only if maintained at temperatures well below 200°F. At elevated temperatures weight losses take place accompanied by embrittlement, and possible shrinkage.

Teflon FEP. Considerably less data is available on this material. Nevertheless it appears to be more stable than Mylar from the standpoint of heat and ultraviolet resistance. Its major disadvantage is the higher specific gravity of the material, and lack of availability in very thin gages.

Tedlar (Polyvinyl Fluoride). Since this is a relatively new material data is very scarce on its resistance to space environment conditions. Standard outdoor weathering tests on pigmented and clear films, however, indicate that this material is outstanding in its ultraviolet resistance, superior, in fact, to all other polymeric films. Since these tests were all run in a standard atmosphere, it may be assumed that ultraviolet resistance, in the absence of oxygen, would be even better. Tests to outdoor exposure have been run as long as 19 years with outstanding results.

Kapton H. (DuPont Company polyimide formerly called H-film). This material is by far the best material from the standpoint of heat, particle, and radiation resistance, with good ultraviolet resistance. The major disadvantages of this material are the somewhat lower physical properties than Mylar at room temperatures (balanced by considerably better properties at temperatures above 300°F), difficulty in bonding, and nonavailability in extremely thin gages such as 1/4 or 1/2 mil. The specific gravity is approximately the same as Mylar.

More satisfactory than metallizing any of the above films is the concept of a composite material, e.g., aluminum foil laminated either to Mylar, polypropylene, or other available thin, light-weight films. Such composite materials exhibit the space environment resistance of a solid aluminum foil combined with the toughness and crease resistance of the organic base material. When the aluminum is used as the outer layers of the sandwich it effectively protects the organic film, while at the same time being reinforced by the polymer. A number of such composite laminates are currently available for use.

Thus, the preferred materials for the reflector applications would be aluminum-Mylar-aluminum laminates or possibly aluminum-polypropylene-aluminum laminates. If used solely as a radar reflector the aluminum would be given a thermal control coating to maintain the equibrium temperature of the skin to a maximum of approximately 120°F when facing the sun. If the reflector element is to be used for both radar and optics, an additional white, thermal control coating would be applied.

The tori rigidizing elements could be readily made using glass fabrics impregnated with any one of several thermosetting resins, and/or gelatin, as described later. The spherical shapes required could be made using any of the available light films; however, to minimize embrittlement and shrinkage stresses from affecting the reflector surfaces, it is believed necessary that the sphere be nonpermanent. For this application then a photolyzable film would be used. This material, available from the Goodyear Aircraft Company, has the property of disentegrating when exposed to ultraviolet and vacuum conditions.

> Task 2.2. Based on the data acquired in Tasks 1.1 and 2.1, preliminary requirements definition studies shall be conducted to select the materials and processes which appear to be desirable candidates for satisfying the performance requirements.

3.8 MATERIALS SELECTION

Based on the data presented in the preceding section it appears that film materials are available which could be used for fabriction of the reflector elements. In each case these materials would have to be metallized, or laminated to a metal film to obtain radar reflective properties. Each film would also have to be coated or pigmented to obtain the required optical visibility properties. In addition to the characteristics of the material such properties as available sizes, thicknesses, pigmenting possibilities, and processing information have been examined to make a valid material selection.

Reflector Element Materials

A listing of the properties and characteristics of the various available composite film materials is shown in Table 3-4. Table 3-4 lists seven materials which might be used as reflector elements. Of the seven materials the lightest, metallized Mylar, is the one considered to be the most doubtful from the standpoint of ultraviolet and radiation resistance for the required 3-year period. The next lightest material, the two-ply aluminum foil - Mylar laminate, is not believed satisfactory for long term usage, since being a two-ply laminate, the exposed Mylar surface would be darkened and embrittled, thus changing the thermal properties and inducing stresses in the material. The most satisfactory material then is the three-ply aluminum foil-polypropylene-aluminum foil laminate, This material has been produced by the G. T. Schjeldahl Company, and has been evaluated by NASA. It is produced with either 58 percent or 70 percent of the aluminum etched away in an hexagonal pattern as shown in Figure 3-11. The etched areas in the aluminum foil are sufficiently small, however, so that the laminate behaves as a solid reflector to radar wavelengths of 2.53 cm (X-band or longer). This material, then, because of its combination of light weight, medium thickness, good weatherability, and current availability, is the recommended material for use as the radar reflector material.

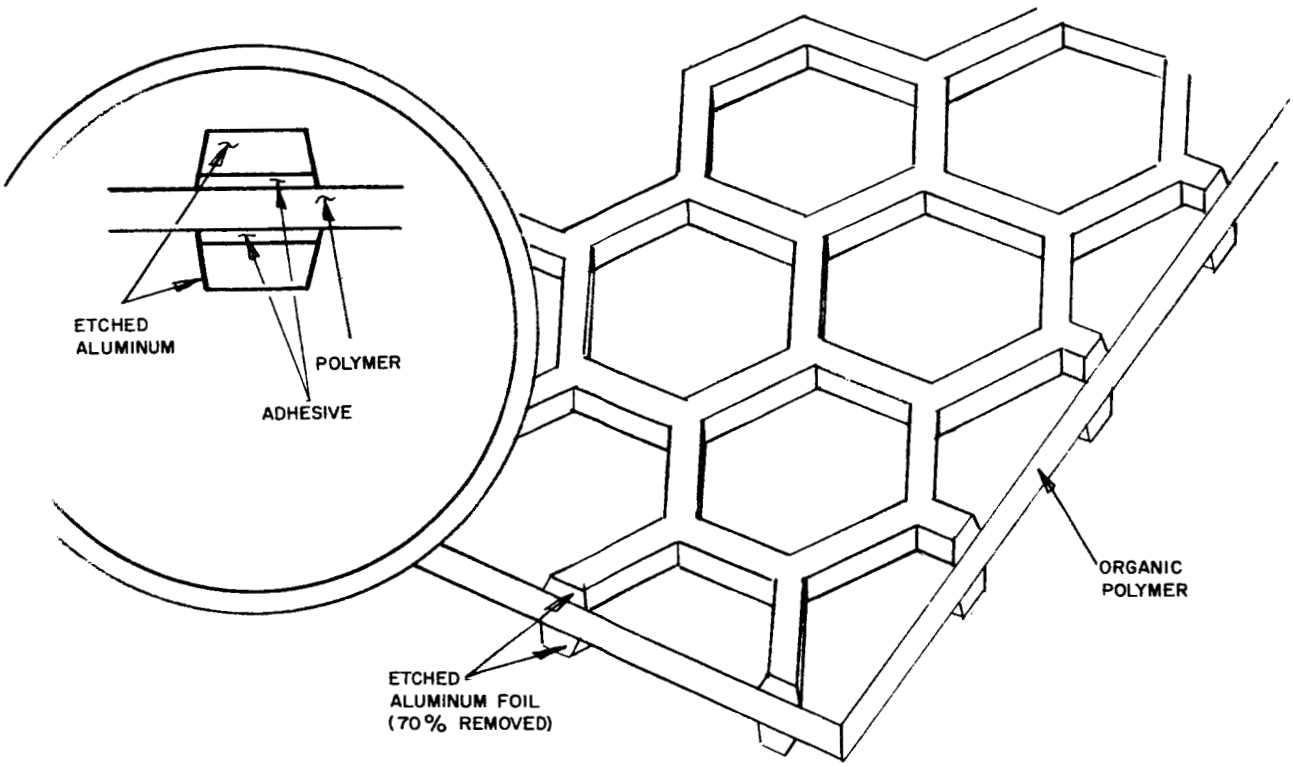

Figure 3-11. Chem Milled Aluminum Foil-Polymer Laminate

TABLE 3-4. FILM MATERIALS SUITABLE FOR USE AS REFLECTOR ELEMENTS

Material	Thickness, Mils		Weight lb / 1000 ft^2	Space Environment Resistance	Optical Visibility	Processability
	Film	Metal				
Metallized mylar	0.5	8000 A	4.1	Fair	Requires coating	Good
Metallized Kapton-HF(1)	1.5	2200 A	12.3	Very good	Requires coating	Difficult
FEP-aluminum foil-FEP(2) laminate	1.0	0.18	14.6	Good	Can be pigmented(3)	Good
Aluminum foil-Mylar-aluminum foil laminate-three-ply	0.35	0.36	8.2	Excellent	Requires coating	Fair
PVF-aluminum foil-PVF(4) laminate	1.0	0.18	10.5	Good	Can be pigmented (5)	Good
Aluminum-foil polyproylene aluminum-foil laminate(6)	0.6	0.18	5.5	Good	Requires coating	Good
Aluminum foil-Mylar laminate	0.35	0.18	5.35	Fair	Requires coating	Fair

(1) Kapton HF - available from DuPont as 1 mil Kapton coated with 1/2 mil FEP Teflon for bonding

(2) FEP-Teflon FEP - Available from DuPont as clear film only.

(3) A pigmenting system would have to be developed

(4) PVF (Tedlar) polyvinyl fluoride - Available from DuPont Company

(5) Available pigmented only down to 1.0 mil in thickness. Process would have to be developed to obtain 0.5 mil pigmented film.

(6) 70 percent of the aluminum foil is removed by chemical milling.

Two other foil-polymer laminates, FEP and PVF (Tedlar) composites, are shown in Table 3-4. In both cases the vendor, the DuPont Company, furnishes either material in a minimum thickness of 0.5 mil, and in this thickness, only as a clear film. The Tedlar material, however, can be made by DuPont as 0.5 mil pigmented stock. A pigmenting process would have to be developed for the FEP material if the film is to be viewed as a white material. The use of the Kapton-HF film would probably also give a good ultraviolet film. However, it currently is not available in a thickness less than 1.0 mil. In addition the requirement for the use of the 1/2 mil FEP film to bond the material makes for excessive weight. The most promising material for a pigmented film is the Tedlar, if some small development effort is added. This material, combined with etched aluminum foil or pattern metallized aluminum could then result in the best composite material for both radar and optical visibility.

The problem of providing radar reflectivity in any of the films is seen to be relatively minor. However, providing optical visibility, along with control of temperature is a considerably more difficult task, from the standpoint of providing a stable coating which will not add excessive weight to the final assembly and which will have good thermal control properties.

Optical - Thermal Coatings

An investigation was made of coatings which might serve as optical aids and at the same time provide thermal control. The requirements for such a coating are as follows:

1) It should be a pure white for maximum contrast with the lunar surface.

2) It should not change color on exposure to the ultraviolet or the vacuum-thermal conditions of the lunar atmosphere, during the 3 year period.

3) It should have an $\frac{\alpha}{\epsilon}$ ratio such that the equilibrium temperature is well below 200 °F.

4) It should have a flexible binder which will adhere well to the selected film.

The results of the investigation indicated that zinc oxide pigment is currently regarded as the optimum material from the standpoint of ultraviolet stability and satisfactory $\frac{\alpha}{\epsilon}$ ratio. A coating, designated S-13 (Reference 3-24) developed by the Illinois Institute of Technology Research Institute appears to have the desired characteristics of color, flexibility, and thermal control. It has been used for a number of other inflatable space structures. This material utilizes a General Electric Silicone RTV as the binder and 40 percent zinc oxide as the pigment. The α_s is given as 0.18 and the ϵ_{ir} as 0.88 to 0.91. The paint has proven very stable in up to 4000 solar equivalent hour tests. The weight of this material is approximately 12.5 lb/1000 ft^2 at

a thickness of 1 mil. For best adhesion the finish must be applied in conjunction with a primer, which weighs approximately 4.0 lb/1000 ft^2 in the recommended thickness of 0.5 mil.

The S-13 finish has been tested in a simulated space environment for 4200 hours (approximately 6 months) during which time the solar absorbtivity increased from 0.21 to 0.27. An extrapolation of the curve to 20,000 hours indicates that the absorbtivity will increase to approximately 0.31. (This time represents considerably more than 3 years lunar exposure, considering that half the time will be during the lunar night.) At the maximum α of 0.31 and a fairly constant ε of 0.9, the maximum temperature anticipated is then approximately 100 °F, which, if reached, should not prove excessively deteriorating to the underlying aluminum composite structure.

Because of the extreme weight penalty attendant to its use, it is planned to apply the S-13 finish to the aluminum foil laminate in a polka dot pattern on only those areas where it is necessary to have optical visibility. The combination of the S-13 paint film, primer, and the radar reflective laminate will result in a material weighing approximately 22.0 lb/1000 ft^2. This material, however, is the only material currently known to have the desired properties of high whiteness, flexibility, and stability required for this application. A considerable savings in weight would result if white pigmented Tedlar is proven to have the desired space environment stability. This material, if produced in a thickness of 0.001 inch, white pigmented, and then metallized in the required pattern would weigh approximately 8.0 lb/1000 square ft^2. The weight savings could then be quite impressive. Even more weight savings could result if 0.5 mil white pigmented Tedlar is produced and found satisfactory.

In the case of the aluminum foil surfaces used solely for radar reflection, it is planned to use a chemical coating which has been found to show excellent thermal control characteristics. This coating, American Chemical Company Alodine 401-45, can change the α/ε ratio from 6.5 to 1.7, thus assuring an equilibrium temperature that could be the same as that reached by the white painted areas. Thus, it is anticipated that minimum differential thermal stresses will result. Since one side of the reflector surfaces would face the sun and the other side would face deep space, preliminary analysis indicates that the equilibrium temperature would be approximately 0 °F during the lunar day and considerably below this during the lunar night. With this preliminary analysis data, thermal effects are not considered to represent a major problem.

Long term space environment exposure data was also not available on the Alodine treated surfaces. However, if a photolyzable film were used as the polymeric component in the aluminum surfaced laminate, maintenance of a low temperature is of less importance.

In addition to assuring that the structure does not reach excessive temperature while on the moon, it is also necessary that the packaged structure be kept at a reasonable temperature during the cis-lunar phase. While

in transit it is planned that the marker will be packaged in an hermetically sealed container. This is necessary, since the rigidizable tori will still be in the "wet" uncured state. A thermal control coating (or possibly heaters) will then be applied to the exterior of the package so as to maintain the contents at a temperature of 50° to 125°F. Within this range the materials will neither be too hard for deployment, or too soft and low in viscosity to rigidize satisfactorily. A detailed analysis of the thermal control system cannot be furnished at this time because no data is available regarding the position of the marker container relative to the rest of the vehicle, orientation to the sun, etc. However, it is anticipated that the thermal control system would not be over a few percent of the total weight of the entire package. On deployment on the lunar surface it is only necessary that the structure be between the required temperatures.

Supporting Structure

In addition to the reflective surfaces and the optical and thermal control coatings, it is also necessary that some method be developed to erect the structure and to maintain it in the expanded position after loss of the pressurizing media. The methods proposed for the various configurations investigated all involve the use of inflated, plastic resin impregnated fiberglass tori, or plastic-fiberglass grid. The resin in the fiberglass would be uncured and flexible on earth, so that the structure could be compactly packaged. After expansion of the structure, the tori would be automatically rigidized using some condition in the space environment or a gas as the activating mechanism. An investigation was therefore made into the various chemical systems which could be used to rigidize the structure. Table 3-5 shows the methods currently available for this purpose and a comparison of their characteristics.

In each of the rigidization systems it is planned to use either a braided fiberglass tube or glass fabric, bias cut, to form the tubes. After impregnation of the fiberglass a thin polyethylene tube is inserted on the inside of the fiberglass tube to act as an inflation bladder. A similar thin film covering is used on the outside of the fiberglass to act as a parting agent. It is anticipated that a torus in a 2-inch diameter, with approximately 0.015-inch wall thickness would weigh 6.6 lb/100 linear feet.

One of the major problems in erecting the reflector webs by means of a pressurized sphere and tori was believed to be the effects of shrinkage as the resin cured. It was felt that the webs would be fully extended, and wrinkle free at the time of initial pressurization. However, after the tori became rigidized, the resin cure shrinkage would permit the webs to slump slightly, which could then cause some wrinkling and/or change in orthogonality. Tests were performed with vertical strips of glass fabric, which had small weights on one end corresponding to a load of approximately 5 psi. The position of the weight was measured carefully; the strips were then resin impregnated and the resin was allowed to cure (or dry in the case of the gelatin). The surprising results obtained indicated that the gelatin impregnated samples at first elongated, and then shrank approximately 0.1 percent after drying. In the case of similar tests run with a polyester resin, the final result was

approximately 0.04 percent elongation caused by the slight continuous tensile load maintained. The result of these tests indicate that initial shrinkage, due to resin cure, should not constitute a serious problem.

In constructing any of the configurations, it is planned that a torus would be attached continuously to a web. Pressurization of the torus would then cause it to expand to the limit of the web, and to cure in this position. In this event slight shrinkage should take place. However, if polypropylene or Mylar is used as the polymeric layer in the reflector web, continuous exposure at an elevated temperature will also cause some slight shrinkage which should then help counteract the effect of the shrinkage in the torus.

Recent tests with the gelatin system indicate that it is possible to "B" stage the gelatin resin. This development means that the gelatin may be changed from a highly viscous liquid to a rubbery state, after impregnation. This could mean a substantial weight reduction when using this system, since the material could be kept flexible with a lower solvent (water) content, and possibly the outer parting film could be eliminated. Further investigations of this system are being made at Hughes Aircraft as part of another project.

Erection Sphere

To erect an inflatable marker beacon with the highest degree of efficiency, it is necessary that the reflective elements be as wrinkle-free as possible and with orthogonality as precise as possible. Previous fabrication experience has indicated that inflatable spheres can be made to a high degree of dimensional accuracy. It is therefore planned to utilize a sphere, in conjunction with the expandable tori, to fabricate parts with the highest dimensional accuracy.

In use, the sphere and the tori would be inflated simultaneously. The sphere would then act as an accurate spatial locator for the tori. Both the sphere and the tori would be kept inflated until the tori have been rigidized. After rigidization the sphere would lose its pressurization and be allowed to collapse against the tori "ribs." If the sphere were made of 1/4 or 1/2 mil polypropylene or Mylar, the lightest weight structure would be assured. However, after a few months of radiation of either of these materials there would be a good possibility of tori distortion as the sphere material became embrittled and shrank nonhomogenously. To prevent such an occurrence it is planned to investigate the use of a photolyzable film produced by the Goodyear Aircraft Company. With the use of this film it will be possible to erect the sphere, and after approximately 20 to 40 hours of high ultraviolet irradiation, the film will disintegrate. Information regarding types of film available, weights, processing, etc. has been received from the Goodyear Aerospace Company (Reference 3-29). Currently this material has been made in widths up to 54 inches and thicknesses as low as 1.0 mil. Films as thin as 1/2 or 1/4 mil are a distinct possibility. The film can be processed by standard adhesive and heat sealing techniques. Laminates with aluminum foil have not yet been made, but Goodyear states that such laminates can be made. It is planned that the photolyzable film would be used in conjunction

with the chemically milled aluminum. Thus a reflector web would be initially erected as a solid film. However, after a short exposure to the ultraviolet light and vacuum, the film would be dissipated in the open spots. The remaining perforated film would then be considerably less vulnerable to shrinkage or warping effects which might occur if polypropylene or Mylar film was contained between the perforations. In the event that the photolyzable film proves impractical or unavailable, it is planned to use polypropylene as the sphere material.

TABLE 3-5. POSSIBLE RIGIDIZATION SYSTEMS

System	Activation Means	Rigidization Time	Remarks
Polyester	Ultraviolet radiation	45 minutes	Must be completely exposed to the ultraviolet source. Could not tolerate shadow areas (Reference 3-25).
Epoxy Resin	Infrared radiation	1 to 8 hours	Should have a variable α/ε coating to have an initially high temperature, which then changes to a low temperature after rigidization. Also can not tolerate shadow areas (Reference 3-25).
Gelatin	Vacuum (solvent loss)	4 to 16 hours	Possible weight penalty of 10 to 15 percent. Good ultraviolet resistance (References 3-25 and 26).
Polyurethane	Water vapor	1 to 16 hours	Possibly 5 to 25 percent weight penalty for water and valving system, (Reference 3-27).
Polyester or epoxy	Gas catalysis		These systems are said to have been recently developed. Complete information is not yet available. Use of the gas catalysis removes the "shadow" and variable α/ε limitations shown above (Reference 3-28).

Task 2.3. Consideration shall be given to observation by the spacecraft imaging system of the ejection and deployment processes.

3.9 BEACON OBSERVATION DURING DEPLOYMENT

Imaging system viewing of the deployment process by the beacon parent vehicle is a desirable system characteristic. Primarily it will provide visual evidence that the beacon has deployed and erected properly. In addition it will permit an assessment of the degree of margin or angular coverage which will be available in the event a hemispherical configuration is deployed rather than a uniquely oriented mechanism.

The areas that effect the viewing capability fall into three general categories. These are as follows:

1) Imaging system field of view capability

2) Imaging system focus capability

3) Telecommunications limitations

The Surveyor spacecraft survey TV imaging subsystem has a narrow and wide angle field of view. These are 6.4 degrees in azimuth and elevation, and 25.4 degrees in azimuth and elevation respectively. This capability does not permit viewing the completely inflated and rigidized beacons as a whole object unless the beacon is deployed far enough away from the spacecraft to permit viewing. Typically if the beacon were a 35-foot hemisphere, it would have to be ejected approximately 80 feet from the spacecraft to just fill the view of the imaging system. For optimum viewing it should be far enough away to permit it to be framed against lunar background requiring that the beacon be displayed even farther. If the beacon were uniquely oriented and thus could be somewhat smaller in overall dimensions, it would have to be deployed on approximately a 60-foot boom to just fill the view of the imaging system. In either case it is desirable from a mechanisms weight point of view not to eject or deploy the beacon any farther than would be required to prevent spacecraft observation of the beacon. Therefore, the viewing of the deployment and unfolding of the beacon will have to be accomplished by taking successive frames as the cameras viewing angle is slewed in azimuth and elevation, sweeping across the beacon in a prescribed raster and then reconstructing a composite image from the combined frames. Since this is a common technique it is not expected to provide any significant problems. The time required to scan the completely erected sphere or hemisphere is a function of the number of frames required. Since frames may be taken and transmitted at 3.6-second intervals, the total time required to scan the complete beacon is not expected to be excessive.

The imaging system focus capability is from 4 feet to infinity. This capability limits the viewing of the deployment cannister or folded boom but

presents no problem in focusing on the erection and rigidization process. Since the deployment and ejection can be instrumented to provide engineering data, it is not essential that the near field be in focus.

If the cannister is located so as to be in focus (farther than 4 feet from one of the survey TV camers), simultaneous transmission of the video and the engineering data may present an additional problem. Because of bandwidth limitations the current Surveyor spacecraft cannot simultaneously transmit both sets of data. This limitation will, however, probably not exist on Block 1A or Block II Surveyor spacecraft.

The wideband telecommunication bandwidth requirements for the imaging system present another problem. For wideband telecommunications the Surveyor high gain planar array antenna must be uniquely oriented to provide a sufficient signal-to-noise level at the DSIF receivers. It is possible that the uniquely oriented beacon when deployed and erected could obscure the planar arrays earth line of sight. In this event no video could be received. One method that may be utilized to eliminate the interference if it did occur would be to slew the beacon after boom deployment and beacon erection to another position; then return it to the desired orientation. Unfortunately because of the time limitations imposed by the study, the effects of this additional maneuver on the deployment mechanism have not been determined. At the very least there would be a reduction in the system reliability because of the additional maneuvers required.

Another factor that was considered for beacon viewing was the reflective properties of the marker. If the reflective properties and the illuminating source are such that the camera automatic iris setting system registers illumination great enough to damage the vidicon faceplate, the camera shutter is inhibited and no picture can be taken. It is not considered likely that either the white diffuse reflective surface of the optical beacon nor the sphere erected RF reflector whose vertical surfaces are optically treated will cause the shutter to be inhibited. However, further consideration will have to be given to the effect of direct sunlight.

3.10 BEACON DEPLOYMENT MECHANIZATION

Mechanical devices for deploying the beacon fall into two general categories: 1) those which catapult the folded reflector out and away from the spacecraft in an uncontrolled manner and 2) those which extend the folded reflector out from the spacecraft in a controlled manner. The choice of the method is dictated by the directional properties of the reflector employed. The first method will be used to deploy a reflector with omnidirectional properties. The second method will be used to deploy a corner reflector which has directional properties and must be oriented in a prescribed direction from the spacecraft. The catapult method is by far the simpler deployment system to implement. TV monitoring will verify deployment of reflector in both cases.

Catapult System (Omnidirectional Radar Reflector)

The catapult system is to deploy an omnidirectional beacon of hemispherical configuration, 35 feet in diameter. The folded reflector package to be ejected weighs 34.3 pounds and has a volume of 2345 cubic inches in volume. The folded reflector package must be ejected to a distance of 70 feet from the spacecraft to the nearest edge of the reflector.

Specific features of the catapult system include the following:

1) Container that can be evacuated for packaging the reflector

2) Means for supporting unit during launch, transit, and landing phases

3) Ejection device that can be actuated on receipt of command signal

4) Means for protecting reflector from damage after ejection

5) Self-righting ability for proper orientation of reflector

The catapult system can also be used to deploy the bird cage reflector, which has omnidirectional property in azimuth but not in elevation. Thus, the catapult system with the self-righting feature is required for proper erection of the bird cage.

System Description

Figure 3-12 suggests the design of the catapult deployment system. The deflated reflector will be packaged in an aluminum spherical shell which can be evacuated. The shell has a radius of approximately 8 inches (corresponding to a packaged volume of 2345 cubic inches) and requires a wall thickness of 0.019 inch to withstand the atmospheric collapsing pressure. The shell, including a diametral parting flange, would weigh less than 1.9 pounds.

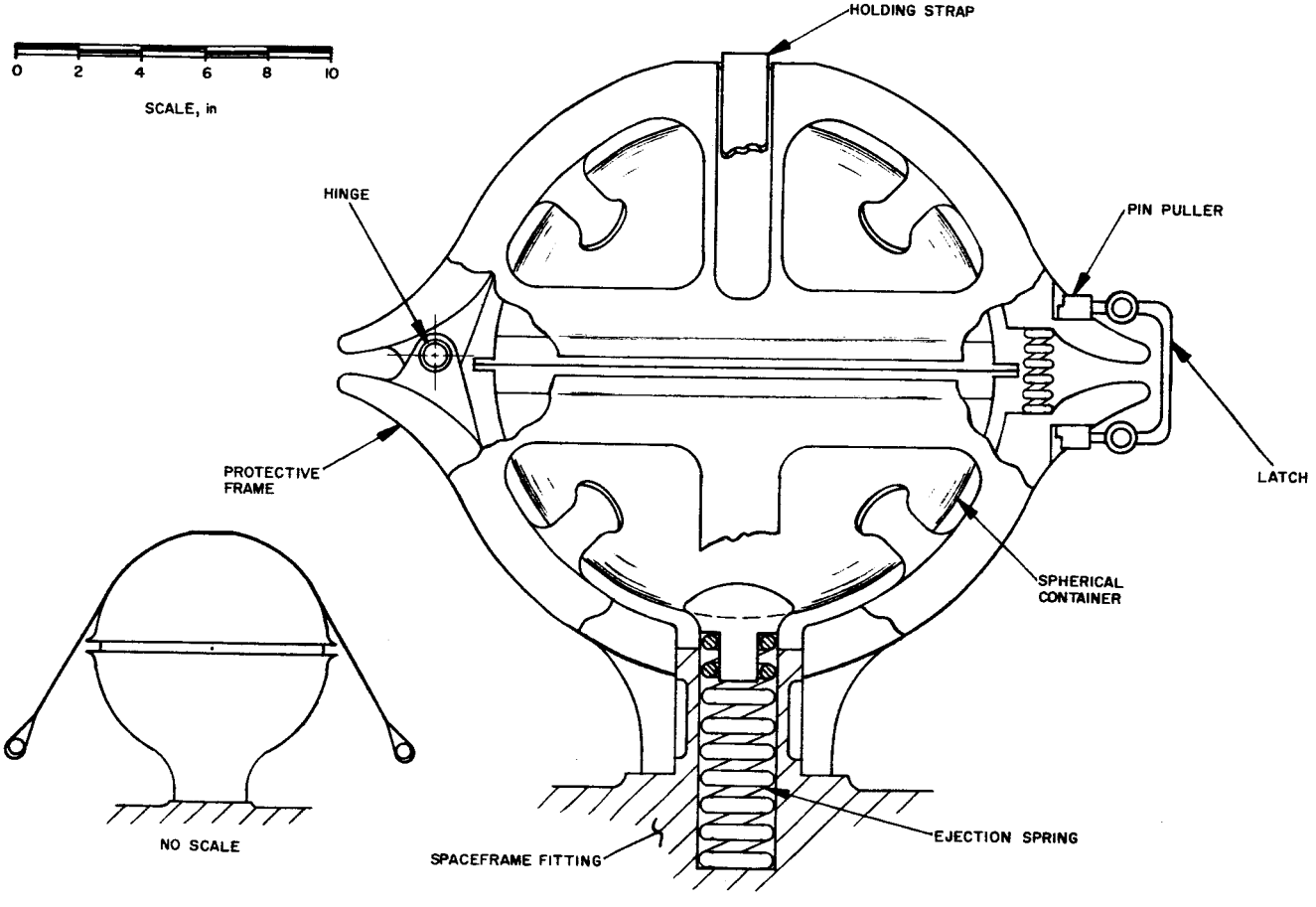

Figure 3-12. Catapult System

The spherical container is enclosed and supported by a frame composed of two half-shells which protect the container during the launch transit and landing phases, and absorb the severe contact loads that can be expected when the container is ejected to the lunar surface. The protective frame can be fabricated from any one of several high-energy absorption materials such as enclosed cellulose honeycomb, or other low density cell-type structures. It is expected that an adequate protective frame can be designed for less than 8 pounds.

The two protective frame half-shells are hinged together and spring-loaded to open in clam-shell fashion. A latch holds against the spring load until the latch is released by the operation of a pin puller type device. The circuit and power source is self-contained, and is automatically triggered (with adequate time delay) when the unit is ejected from the spacecraft.

A lip that extends along the periphery of the protective frames in the same diametrical plane as the spherical container parting line, ensures that the final attitude of the deployed container will permit proper inflation of the reflector.

Components that are susceptible to damage when the unit is deployed (such as the hinge device and latch release mechanisms) can be located in protected areas within the outer frames.

The ejection device could be a simple compression spring having, as an example, a 10-inch stroke with a maximum force of about 600 pounds. The deployment spring would weigh less than 1.8 pounds. The device could be mounted to the spacecraft by means of a pedestal adapter which would support the unit on a hollow post surrounding the deployment spring. The unit could be restrained against the deployment spring by a light gage Elgiloy strap. A pin-puller type release device, which would allow the Elgiloy strap to spring free of the unit, can be used to initiate deployment of the unit to the lunar surface. Total weight of the spacecraft adapter and hold-down mechanism is expected to be less than 2.5 pounds.

Preliminary Dimensions and Weights

The outside dimensions of the protective frame would be approximately 20 inches in diameter with a 28-inch diameter flange in one plane. The weight of the complete system is estimated at 51.3 pounds, including 34.3 pounds for the reflector.

Advantages

The system has the following advantages:

1) Simple and reliable ejection mechanism

2) Electrical power requirement is low

3) Interface and integration problems are low.

4) Reflector can be deployed before completion of primary mission of spacecraft.

5) Knowledge of spacecraft orientation is not required.

6) Relatively simple, straight-forward hardware requirements.

Disadvantages

The system has the disadvantage of overall large size and weight.

Possible Problem Areas

1) Inadequate support of the unit on the spacecraft

2) Deployment damage due to severe landing shock load

Scaling Law

The catapult system weight can be scaled in the following manner when the packaged volume of the reflector changes:

1) The thin-walled spherical container weight is found by,

$$W_2 = W_1 \left(\frac{V_2}{V_1}\right)^{2/3}$$

where

W_1 = initial weight

W_2 = final weight

V_1 = initial volume

V_2 = final volume

2) The protective frame weight is found by

$$W_2 = W_1 \left(\frac{V_2}{V_1}\right)^{1/2}$$

3) The ejection spring weight varies directly as the total weight that is to be ejected. The bulk of the ejected weight is composed of the weights of the reflector and its inflation equipment, the spherical container, and the protective frame.

Extendible Boom System

The extendible boom system deploys a circular sided corner radar reflector in a prescribed orientation from the spacecraft. This reflector has edge dimensions of 12 feet and when inscribed within a sphere, its diameter will be 19 feet. A layout study showed that a boom length of approximately 30 feet is required to suspend this sphere. Reflector material and erection considerations dictate the suspension of the sphere by its vertical diameter. Two other reflector sizes were considered, one larger and one smaller, for increased and decreased gain margins beyong the nominal reflector. The larger reflector has a sphere diameter of 24-1/2 feet and the smaller, 14 feet.

Two optical beacons will be deployed as a separate system by the catapult method. Because of their very light weight and small size, and because there is no need for righting the reflector package, a catapult system similar to that previously described in the progress report of 2 March 1965 will be utilized. The two optical beacons will be packaged in a single cannister with a separating device, such as a spring, between them. This spring will cause separation of the two packages as they are ejected from the canister.

Systems Description

Figure 3-13 suggests the design of the deployment system required to uniquely orient a corner reflector which is contained in a spherical covering 19 feet in diameter. Orthogonal axes with their origin fixed to the reflector center are designated azimuth, roll (both shown in Figure 3-13), and elevation, which is perpendicular to the figure. It is desired to maintain the azimuth axis of the reflector parallel to the moon local vertical and the roll axis parallel to the plane formed by the boom (the spacecraft being vertical) and the local vertical. When the spacecraft is vertical, rotation of the boom about the spacecraft mast for azimuth positioning of the reflector does not cause deviations from this nominal reflector orientation. Now, if the spacecraft is nonvertical and if the reflector is rigidly attached to the boom, the reflector coordinates will deviate from their nominal orientation. This deviation can be corrected with a suspension system that allows the reflector freedom to align itself with the local vertical.

The major components of the extendible boom system are 1) azimuth 2) extension boom, 3) cannister (with folded reflector), 4) pulley-cable suspension. The sequence of operation of the boom deployment system is as follows:

1) The folded boom and cannister will be positioned in azimuth with a motor drive system mounted on the spacecraft mast. A 360 degree range in rotation is required.

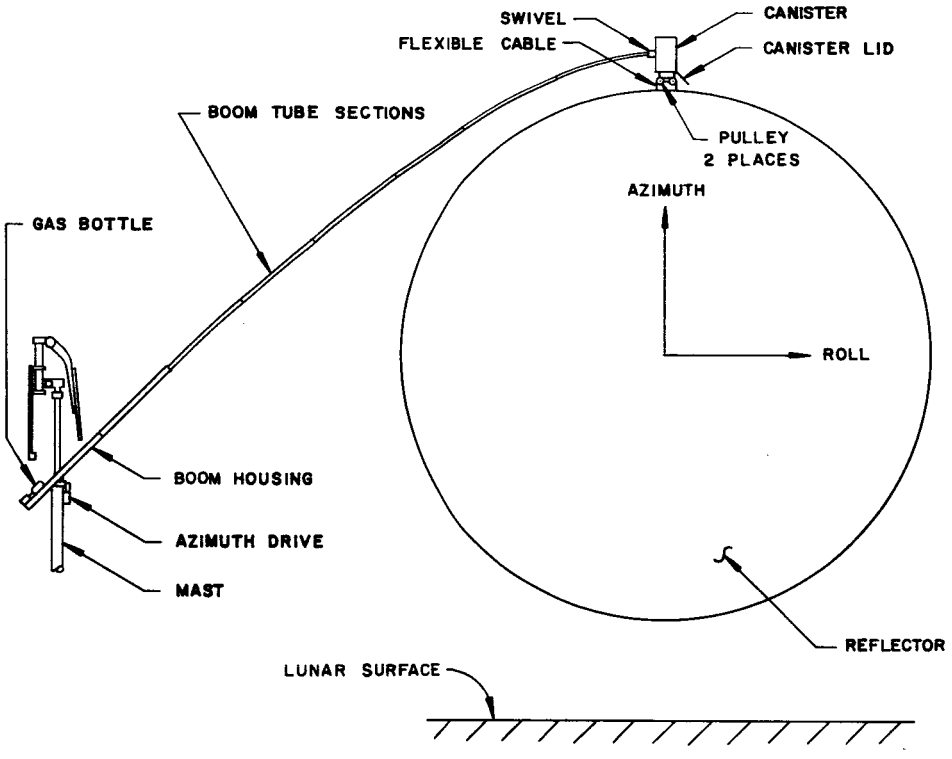

Figure 3-13. Extendible Boom System

2) The extension boom and canister will be actuated and the canister will be carried out by the telescoping sections of the boom.

3) When the boom is fully extended the canister latch pin puller is energized, opening the canister lid. The reflector drops out and is automatically inflated.

4) The sphere is attached to a pulley-cable arrangement, which allows alignment of the reflector with the local vertical.

Component Description

Azimuth Positioning System. The azimuth positioning system will consist of an electric motor drive with a very large gear reduction. A stepper motor with integral gear train as used for the Surveyor antenna/solar panel positioner can be utilized in this application. This integral unit will be mounted on the mast and its output will mesh with an external gear, which is bearing mounted on the mast. This driven gear carries the boom housing. Studies indicate that this motor-gear drive combination is capable of positioning against the inertia, unbalanced, and friction loads of the folded boom and also, hold against the large unbalance load of the extended boom. The azimuth drive will be operated only when the boom is in the stowed condition. In the deployed condition there is a large increase in moment of inertia, unbalance load, friction, and boom compliance. The azimuth drive will respond to positioning signals from the telecommunication system.

Extension Boom. The extension boom consists of telescoping sections of seamless tubings. Except for the two end sections, each section acts as a cylinder for the preceding section and as a piston for the following. The boom will be locked in the stowed position by the extended pin of an explosive pin-puller. Extension will be accomplished by electrical squib actuation of a pressurized cold gas power supply which will provide a controlled flow of gas to propel the tubes to the extended position. The boom sections will have locking devices to retain the sections in the fully extended position. The pressurized cold gas source and tube assembly will be mounted on the boom housing, which in turn is mounted on the azimuth drive output gear.

An experimental extension boom similar to that described has been built for the Surveyor. This boom was designed to extend an instrument package, weighing 12 pounds on earth, to a distance of 15 feet. The boom had eight telescoping sections and deflected about 10 inches at the tip when carrying a simulated moon weight of 2 pounds. This unit without modification is quite suitable for deploying the smallest reflector (14 feet diameter sphere).

The extension boom for the nominal sized reflector is expected to be about 30 feet long. Layout study indicated that a boom length of approximately 40 feet is required to suspend the 24-1/2-foot diameter sphere. System weight and load deflection considerations will impose severe

constraints on the design of the boom of these lengths. The deflection of the boom must be controlled by design to minimize deviation in reflector orientation due to a lateral component of the load.

Canister. The canister will be a cylindrical container with a lid spring-loaded to open. The container will be bearing mounted to the boom end, the container axis being perpendicular to the boom axis. Thus, a slightly unbalanced canister will tend to rotate about the roll axis for self-alignment with the local vertical. An explosive pin-puller will release the container lid. This sequence may be initiated via a trailing wire or by self-contained mechanisms.

Pulley-Cable Suspension. The reflector will be suspended by a light flexible cable whose ends are attached to a reflector torus. The cable runs through a pair of pulleys attached to the canister and the cable hangs from the pulleys allowing the reflector to align itself with the local vertical like a plumb bob. The separation of the two pulleys gives some torsional stiffness about the azimuth axis (or vertical diameter of the sphere) to prevent rotation about that axis.

Tables 3-6 and 3-7 present preliminary dimensions and weight for the extendible boom system.

TABLE 3-6. PRELIMINARY DIMENSIONS AND WEIGHT

Extendible Boom System	Weight, pounds		
	Reflector Size		
	14-foot sphere	19-foot sphere	24-1/2-foot sphere
Azimuth motor and gear box	2.0	2.0	2.0
Motor mounting structures, gears, and bearings	1.5	1.75	2.0
Extension boom	3.0	9.0	18.0
Canister (without reflector)	2.2	2.6	3.1
Total	8.7	15.35	25.1

TABLE 3-7. DIMENSIONS

Extendible Boom System	Dimensions, Diameter by Length		
Azimuth motor and gear box	2-1/2 x 6 inches	2-1/2 x 6 inches	2-1/2 x 6 inches
Extension boom (folded)	1 x 30 inches	1-1/2 x 36 inches	2 x 40 inches
Cannister	6-1/2 x 10 inches	7 x 13 inches	8 x 15 inches

Catapult System (Optical Reflectors)

The overall dimensions of the catapult system for the optical reflectors will be approximately 4.0-inch diameter by 5.0 inches long. The system weight, less reflector and inflation equipment, will be about 1.5 pounds.

Advantages

1) Predictability of performance

2) Smaller reflector size

3) Reflector does not strike lunar surface, eliminating wear and tear

Disadvantages

1) Longer folded length (folded boom plus canister)

2) More complex mechanisms and decreased reliability such as azimuth drive, pulley-cable suspension of reflector, and extension boom.

3) Design interface and system integration problems such as 360 degree-rotation in azimuth, more electrical interfaces, and Centaur nose cone shroud interference.

4) Electrical power and position signals required

5) Deployment only after completion of primary mission of spacecraft

6) Angular orientation of spacecraft in lunar coordinates must be known.

Possible Problem Areas

1) High structural loading of spacecraft mast.

2) Probable deployment of reflector in front of telecommunication antenna, blanking out TV.

3) Boom interference with spacecraft structures

4) Deformation of reflector

5) Pointing accuracy of reflector largely dependent on predictability of boom and reflector deflections, reflector geometry, and cg control.

Task 2.6 and 2.7. Studies shall be conducted to develop alternate families of passive reflector and associated constraints. The reflectors to be considered are classified generally as RF corner reflectors whose overall shape may be either a portion of a sphere or an entire sphere and which has been modified as required to provide optical reflectivity. In addition, a concept evaluation will be made to determine the applicability of a hollow spherical reflector (bird cage antenna).

Task 2.8 and 2.9. Tradeoff studies shall be conducted to select a recommended preliminary design. These studies shall include an examination of the relationship between schedule, cost, weight, acquisition range, packaged volume, complexity, reliability, thermal control and materials and material processes. Quantification of the weight, packaged volume, and reliability of candidate preliminary designs will be provided in the final report.

3.11 SYSTEM CONFIGURATIONS AND TRADEOFFS

Initial considerations were given to a number of different design configurations, all of which might have met the radar and optical functional requirements. Further examination of these designs was then made from the standpoint of weight, fabrication complexity, deployment reliability, etc.

In preparing the designs and evaluations structural analyses were made of the tori and the inflated tubes to determine the optimum sizes and weights. The physical property data used for the tubes were obtained as the result of space environment erection and rigidization tests run at Hughes Aircraft. These tests indicated that with either the polyester system or the gelatin impregnation system tubes could be made with minimum tensile strengths of 20,000 psi, compressive strengths of 10,000 psi, and flexural strengths of 25,000 psi. Tensile and compressive moduli of 1.5×10^6 psi and flexural moduli of 1×10^6 psi were also used. With these conservative physical property data it was calculated that most of the larger structures could be made with 1 to 1-1/4 inch diameter tori with 0.015 inch wall thickness. Where special center post inflated tubes were required, these ranged from 2 to 4 inches in diameter with wall thicknesses of 0.022 inch. The configurations considered are listed in the following paragraphs.

Eight Quadrant Omnidirectional Reflector

Figure 3-14 shows an eight quadrant sphere which was designed for use as an omnidirectional optical and radar beacon marker. Because no special orientation would be used with this type marker it was designed to be 35 feet in diameter. Table 3-8 shows a detailed breakdown of estimated weights and packaged volume for this structure and the others considered. As shown, the assembly consists of three 1-1/4 inch diameter cross section equatorial tori supporting the reflector elements. The tori are in turn spatially oriented by the transparent sphere. This configuration would be moderately difficult to fabricate, but would be easy to deploy.

TABLE 3-8. WEIGHTS AND PACKAGED VOLUMES OF VARIOUS CONFIGURATIONS

Design	Size	Weights, pounds					Volumes		Remarks
		Tori	Reflectors	Sphere	Point	Total	Actual	Package[b]	
8 quadrant sphere	35 foot diameter	13.5	15.9	13.6	12.8	55.8	1266	3855	Might require special orientation for best optical visibility.
4 quadrant hemisphere	35 foot diameter	9.03	10.06	10.4	4.8	34.29	729	2345	Must be erected base down.
Uniquely oriented single quadrant	19 foot diameter	3.05	1.88	4.1	2.1	11.13[a]	192	575	Requires special orientation apparatus which brings weight up. Also is not omnidirectional.
4 quadrant triangular	58 x 24 feet	8.5	16.3	–	6.7	31.5	665	1995	Simplest to build, somewhat dubious as to performance.
Bird cage	27 foot diameter	144	6.0	16.1	–	166.1	3220	9660	Very difficult to fabricate and deploy. Extremely heavy.
Bicone	40 foot diameter	20.3	19.7	17.8	2.0	59.8	1272	3716	Next hardest to build and deploy.

(a) This design would require two separate optical markers for omnidirectivity which weigh 1.0 pound each

(b) Packaged volume is taken as three times the calculated volumes

Note: Above weights do not include gases or other erection media

Four Quadrant Omnidirectional Marker

Figure 3-15 shows a four quadrant omnidirectional marker which is similar to the eight quadrant marker, except that it would have to be deployed to be erected base down. This design does have the advantage of lighter weight, and slightly simpler construction. Figure 3-15 also shows the application of a white pigmented cap, and white finished areas to result in optical visibility. Also shown are the combination of striped and hexagonal metallized patterns used to obtain proper polarization of the returned radar signal.

Uniquely Oriented Reflector

Figure 3-16 illustrates a design for a reflector which would be precisely oriented. Because of the orientation this design could be somewhat smaller, a 12 foot corner reflector inscribed within a sphere 19 feet in diameter. Table 3-8 also lists the weight breakdown of such a structure. Similar to the previous design, this marker utilizes three tori and a sphere. This design would present approximately the same difficulties in fabrication as the first two. To assure visibility at low angles of approach, the uniquely oriented marker will utilize, in addition to the white polka dots, two separately deployed torus expanded markers. These markers will each have an area of 100 square feet and will be automatically expanded to shape by the encircling torus. The approximate weight of each marker will be 1.0 pound. No special orientation will be required to assure erection right side up.

Four Quadrant Triangular Reflector

Figure 3-17 illustrates a four quadrant reflector which, while not as efficient as either of the previous reflectors in the same size, does have the virtue of simplicity. As shown, the reflectors would be erected by the central inflated and rigidized tube, and the outer torus. Orthogonality and reflector web tautness would be obtained by mounting the reflectors on spring loaded wires. It is planned that the base and height dimensions of each reflector would be 24-1/2 feet, and the circular base would be 58 feet in diameter in order to improve optical visibility. The base of the reflector would be metallized on the bottom surface in the desired pattern. The top (outer) surface would then either be pigmented white, or would have a white coating applied on the outer surface. This design is the simplest to fabricate. It should be relatively easy to deploy.

Bird Cage Reflector

Another type of reflector considered was the so-called bird cage reflector. In this design, a 27-foot diameter sphere, containing, on its surface a multiplicity of wires at 45-degree angles to each other, is rigidized in such a manner as to support a small torus erected reflective cylinder in its center shown in Figure 3-18. The rigidization of the sphere would take

place by final curing of a network of plastic-fiberglass bands. This structure, as shown, would be extremely difficult to construct, and would have to be deployed precisely in one plane.

Bicone Reflector

Figure 3-19 illustrates the design for an omnidirectional biconical reflector. In this design, two 40 foot diameter cones are suspended from an expanded and rigidized center post. The base of each cone is formed by the expansion and rigidization of a plastic-fiberglass torus. A light film is used around the entire structure to aid in initial erection, prior to rigidization of the center post. A white pigmented conical top is used to furnish optical visibility. This design is considered to be somewhat difficult to build (more so than any of the others except the bird cage). It would have to be deployed so the bottom cone was placed on the bottom.

Construction Features

In constructing the various parts of any of the designs, it is planned to utilize conventional fabrication techniques as far as possible. In this respect the large surfaces will be made from the 44 to 72 inch width materials available (except if Kapton is used which is currently only 16 inches wide), using conventional bonding techniques which have already been developed for the Echo type balloons. The tori rigidization system used will probably be the gelatin system, although the actual choice cannot be made with certainty since tests are still in progress with the various systems.

The only features considered to be "new" types of construction are those relating to attachment of the webs to the tori, attaching the tori to the inner sphere surface, and making torus to torus attachments.

The method of attaching the reflective webs to a torus is shown in Figure 3-20. It is planned that all tori and webs would be precut and then temporarily assembled, before permanent assembly would be made. By cutting the webs to perfect circles, and then attaching one such web to a complete circular torus, it is believed that the correct size, and torus shape could be developed so as to result in a virtually wrinkle-free surface when the torus is inflated.

The tori, and the webs would then be cut at the appropriate points to make the intersections. Tori joints would then be made as illustrated in Figure 3-21. The premolded plastic fittings would probably be made of the same material used for the tori. Such parts, made in an approximately 0.015 inch thickness should be strong enough and yet extremely light. In packaging such an assembly it is planned that the space inside the fitting would be filled with the tori and reflector or inflation materials to maximize the utilization of space.

The problem of adjusting and securing the tori to specific areas on the inner surface of the sphere, if used, has not yet been resolved. This is one of the fabrication techniques still to be established.

Advantage would be taken of the slight shrinkage of the web to counter the cure shrinkage of the tori (as previously described). Since no structures of this type have as yet been built it is very difficult to predict accuracies and tolerance variations which might occur. However, based on good plastics fabrication techniques, and allowing for the fact that the structures would be erected and rigidized without a mold it is estimated that the following tolerances could be maintained.

Overall dimensions	± 1/2 inch (based on 20 foot diameter structure)
Orthogonality	± 0.15 degree
Web wrinkling after cure	not to exceed 1/8 inch

Expansion Techniques

In all cases, an effort will be made to have each structure expand and rigidize automatically. A number of tests have been made at Hughes to develop this technique and good success has been achieved with several systems. For torus expansion it is planned to incorporate a small amount of a volatile liquid in the interior of the torus. On exposure of the structure to the vacuum atmosphere the vapor pressure of the liquid then automatically erects the torus. The exact liquid to be used and the amounts would have to be determined during tests made with the particular structure.

Expansion of the spheres would likewise be done automatically, using subliming solids such as anthroquinone, camphor, etc. in order to result in much lower pressures. The results of the Echo I and II tests have demonstrated that this technique should work satisfactorily. Again the precise amounts would have to be determined after tests are started on the structure, since it is very difficult to predict the efforts of folds, structure stiffness, etc. Calculations made on the 35-foot diameter hemisphere, neglecting stiffness and just considering gravity effects, indicated that only 2.36 grams of helium gas (or an equivalent molar amount of a volatile liquid) would be required to pressurize the 220 feet of tori tubing to 4 psi at approximately 75°F. The hemisphere, with a volume of 11,200 cubic feet would require approximately 0.18 pound of anthroquinone to become fully expanded, including raising the tori (however, at least 1 pound would be used to ensure against leaks, etc.). The weights of the inflation media are then considered to be a small fraction of the total weights.

Weights and Volumes

Estimates of the weight and volumes of the various beacon configurations are listed in Table 3-8. Figure 3-22 shows how the weights and volumes vary as the size of the beacon is changed.

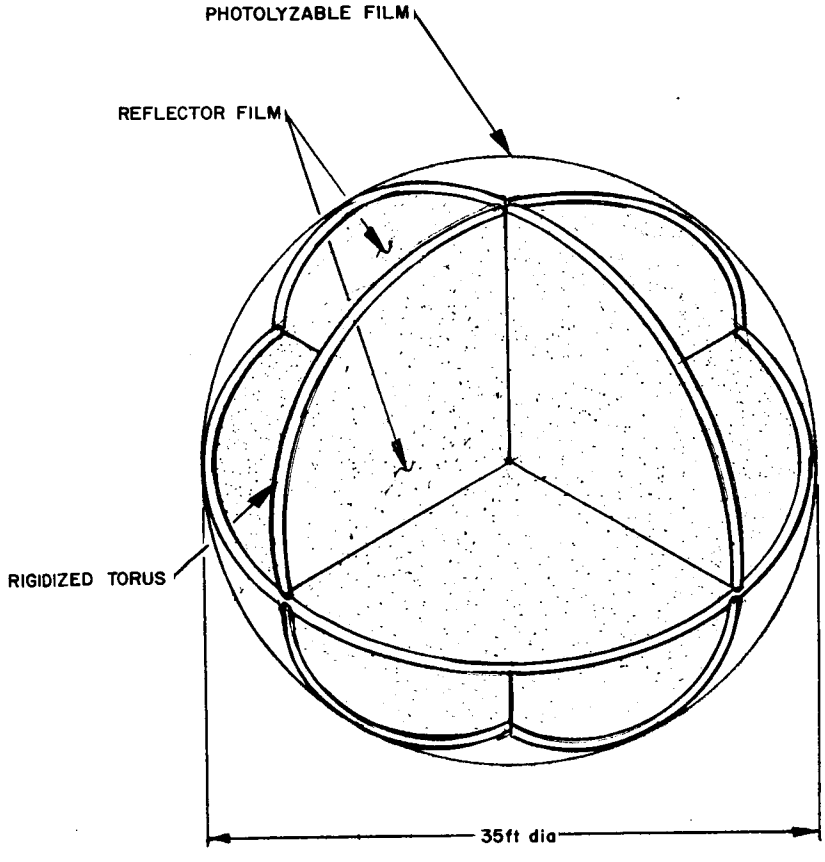

Figure 3-14. Eight Quadrant Omnidirectional Marker

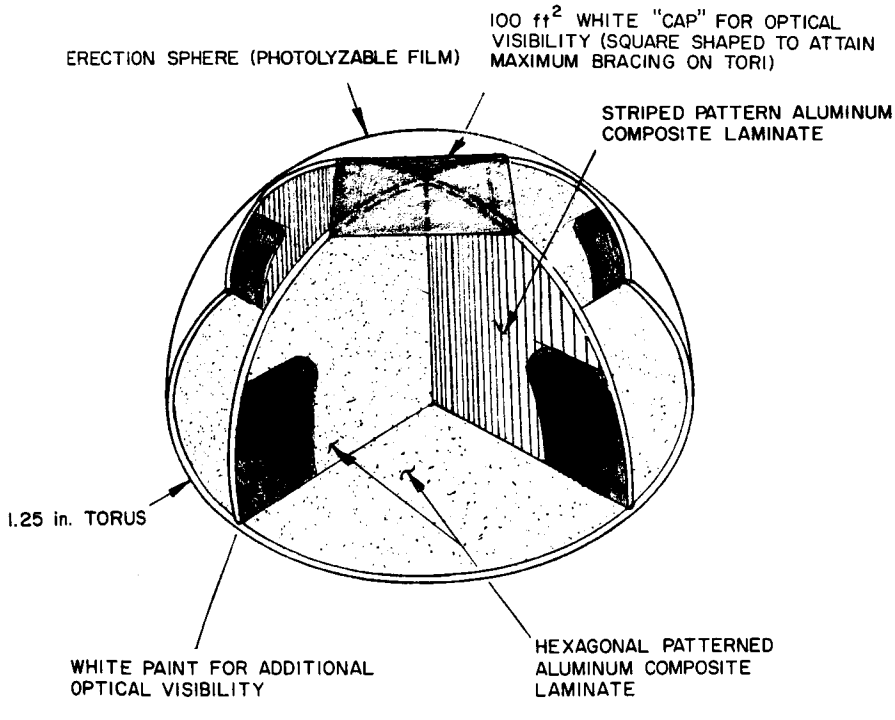

Figure 3-15. Quadrant Hemispherical Reflector

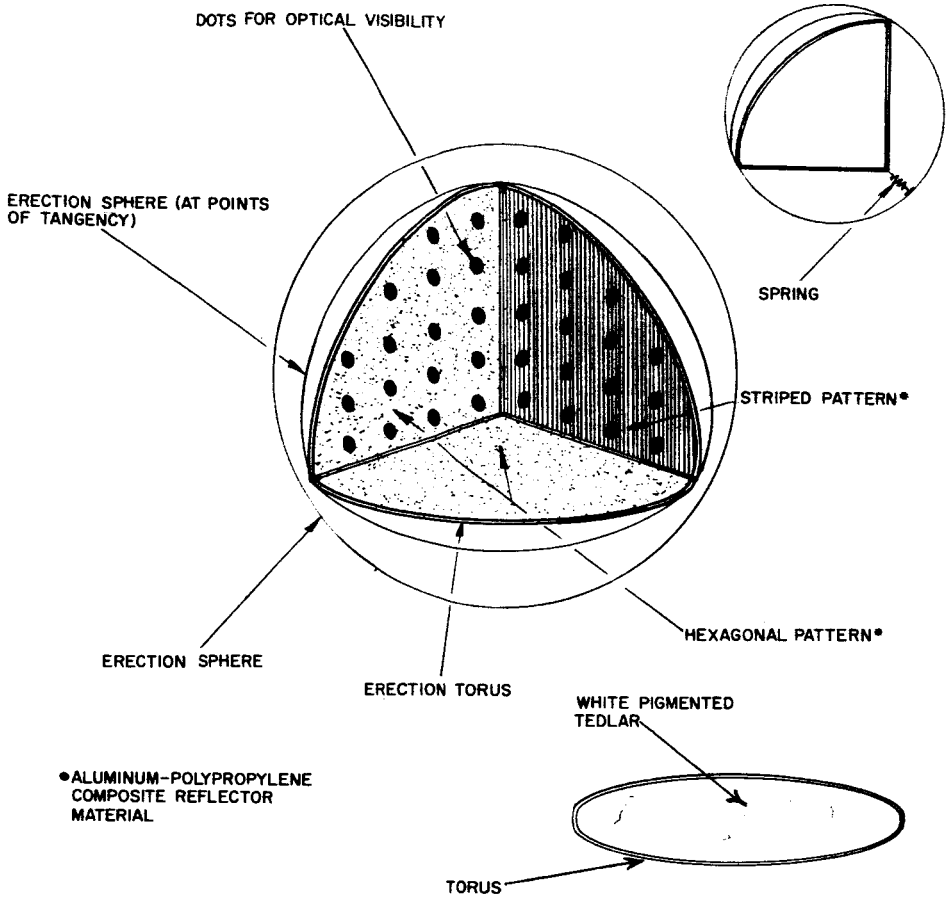

Figure 3-16. Uniquely Oriented Reflector

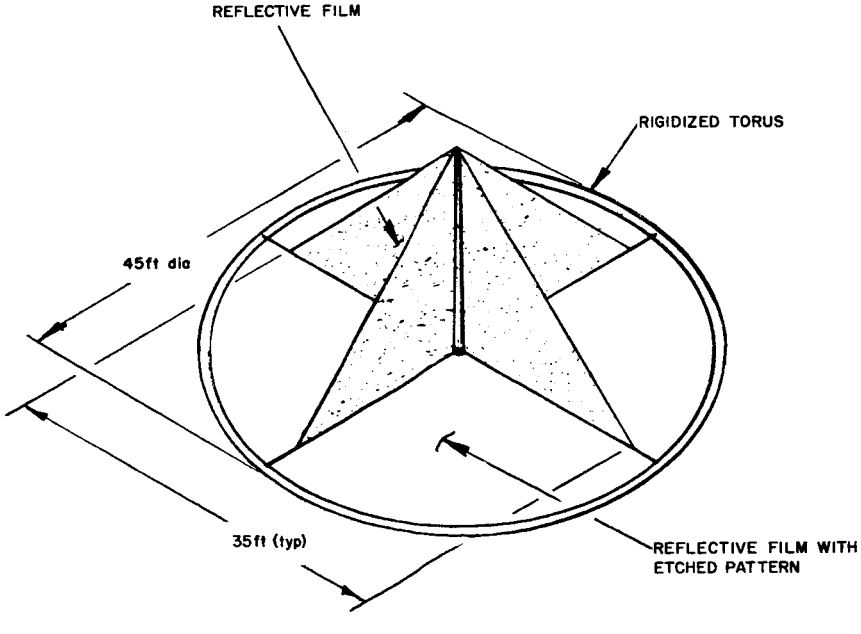

Figure 3-17. Four Quadrant Triangular Reflector

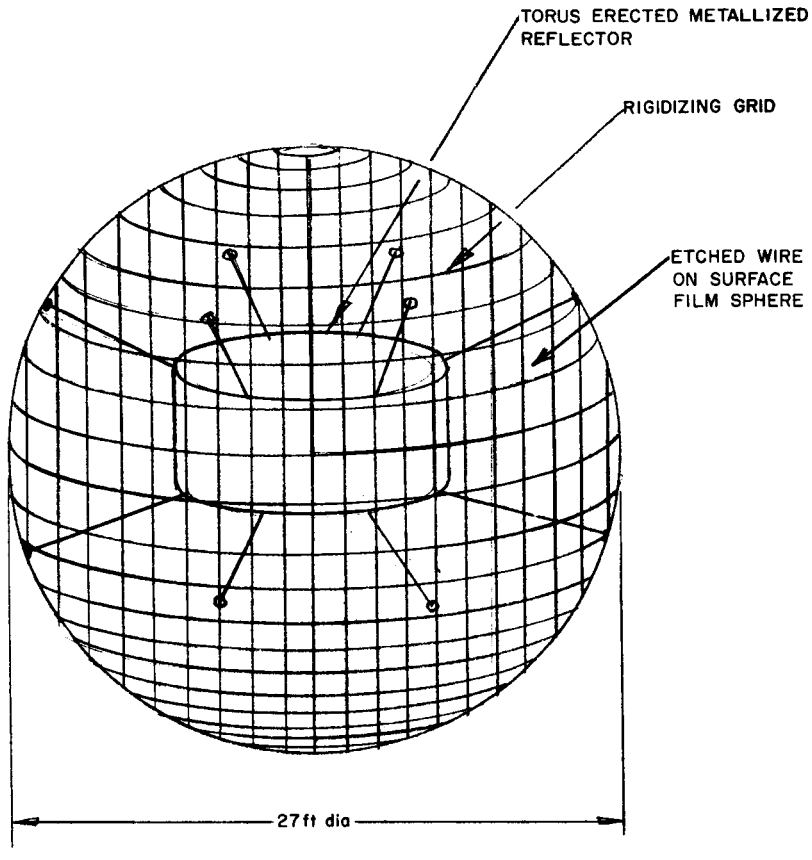

Figure 3-18. Bird Cage Reflector

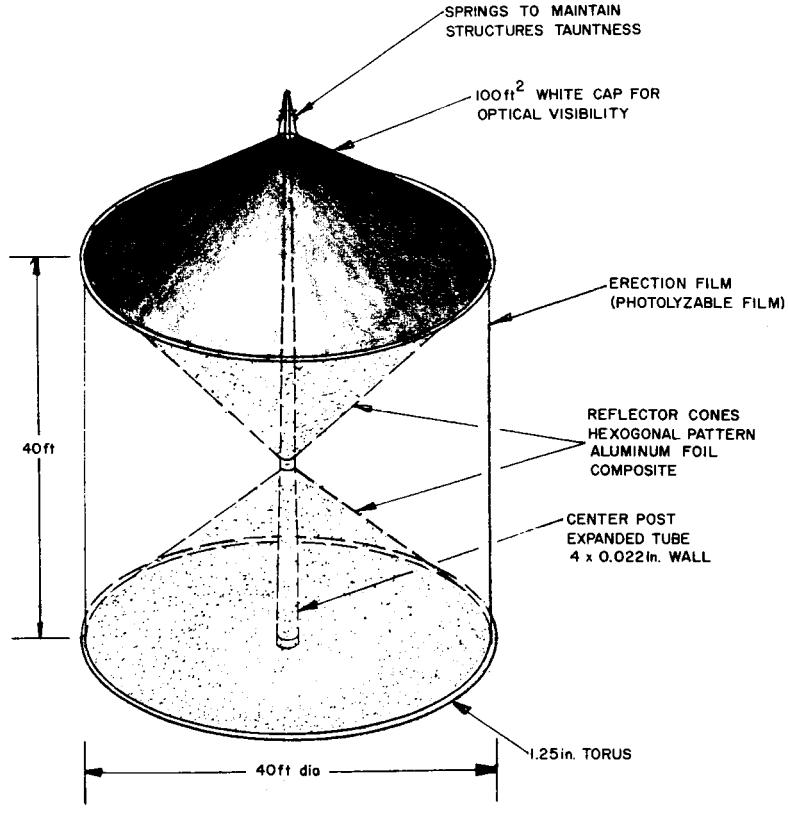

Figure 3-19. Bicone Reflector

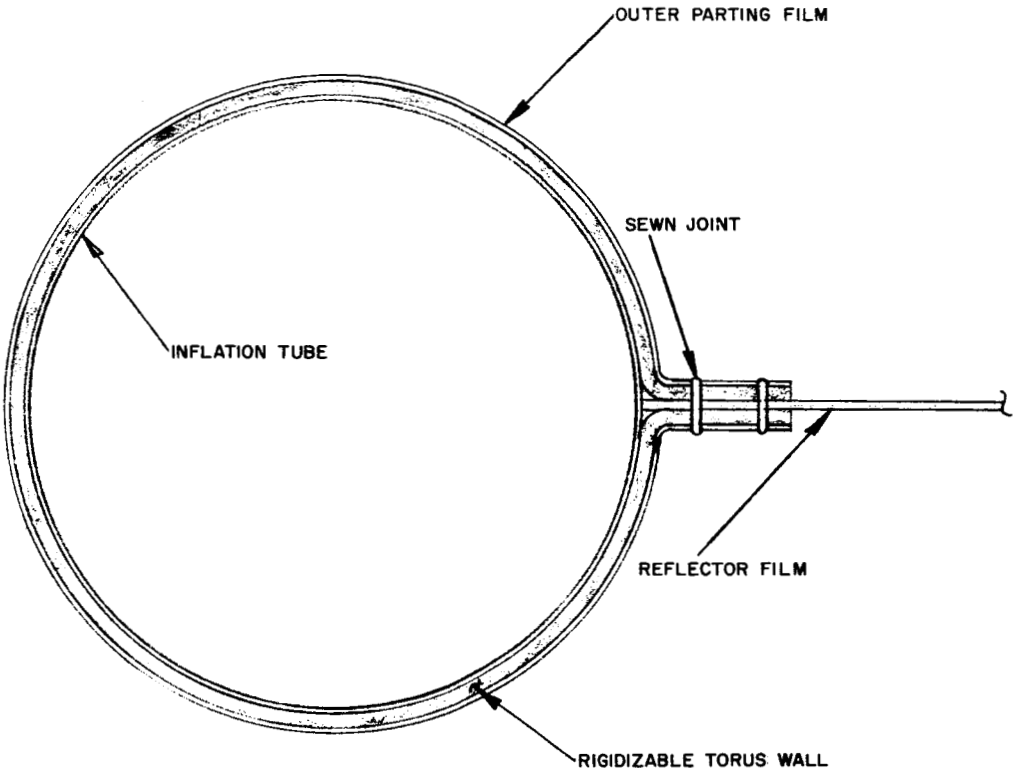

Figure 3-20. Method of Joining Torus to Reflector Film

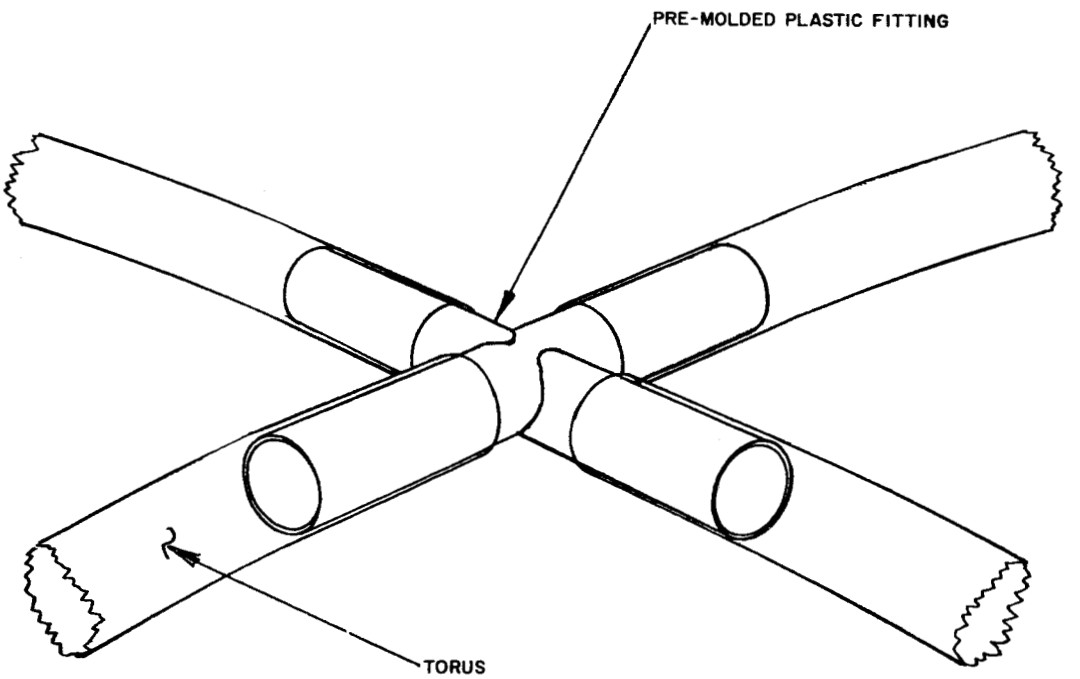

Figure 3-21. Method of Making Torus Joints

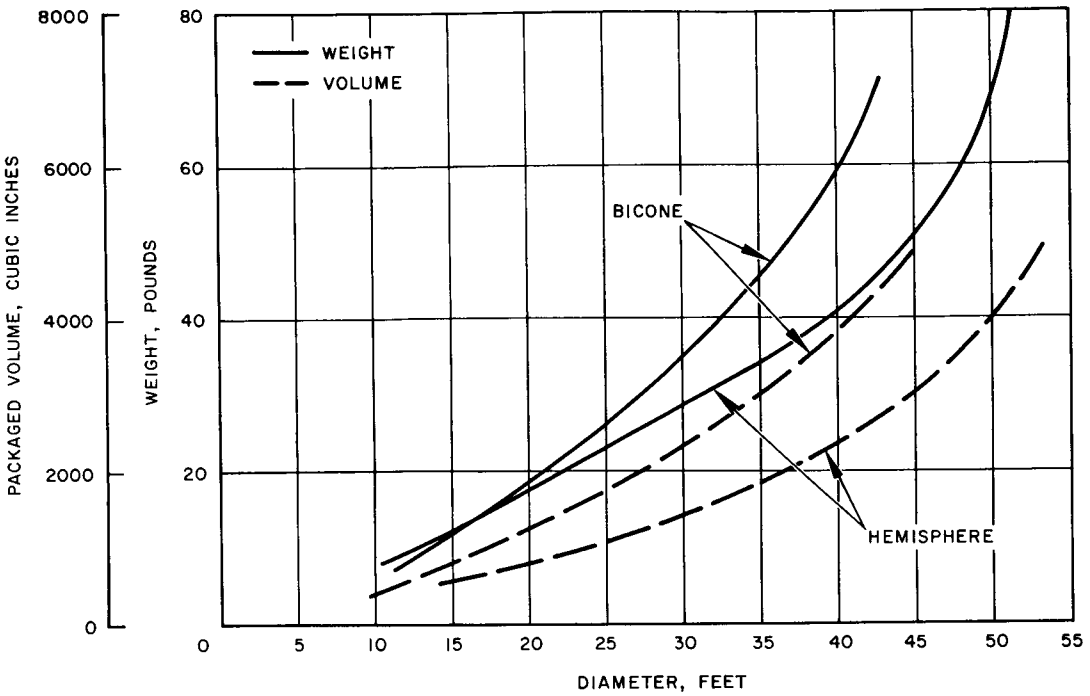

a) Omnidirectional Reflector

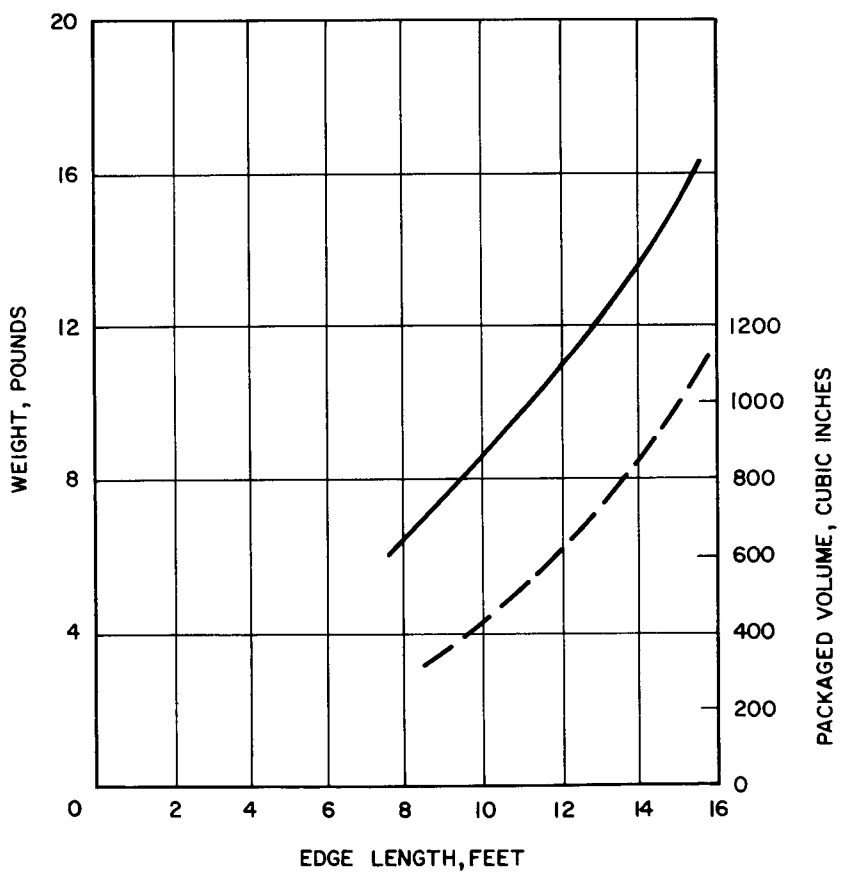

b) Uniquely Oriented Reflector

Figure 3-22. Beacon Dimensions versus Weight and Volume

The maximum cross section of a circular side corner reflector as previously defined is given by:

$$\sigma_b = \frac{16 \pi a^4}{3\lambda^2} \tag{3-7}$$

The apparent cross section of the reflector will be reduced by several factors defined as:

L_p = Loss in db due to polarization mismatch

L_t = Loss in db due to tolerances

L_v = Loss in db due to view angle off the direction of return

then

$$\sigma_b = \frac{16 \pi a^4}{3\lambda^2 \log^{-1}\left(\frac{L_p + L_t + L_v}{10}\right)} \tag{3-8}$$

Equating Equations 3-6 and 3-8

$$\frac{\left[\log^{-1}\left(\frac{S/C_{db}}{10}\right)\right] K 4\pi (R_{nm} \times 6076)^2}{\log^{-1}\left(\frac{G_{db} + I_p}{10}\right)} = \frac{16 \pi a^4}{3\lambda^2 \log^{-1}\left(\frac{L_p + L_t + L_v}{10}\right)}$$

$$a^4 = \frac{3\lambda^2 K 4\pi (R_{nm} \times 6076)^2 \log^{-1}\left(\frac{S/C_{db}}{10}\right) \log^{-1}\left(\frac{L_p + L_t + L_v}{10}\right)}{16\pi \log^{-1}\left(\frac{G_{db} + I_p}{10}\right)}$$

PARAMETERIZATION OF RADAR PERFORMANCE

The hemispherical cluster of circular side trihedral reflectors was studied in parametric form. Two families of curves were drawn for this study, one relating the length of the edge of a corner versus range, and the other relating percent coverage of the hemisphere versus range.

The equations for these curves were derived in the following manner. The signal-to-clutter ratio as previously defined is given by

$$S/C = \frac{\sigma_b G}{K\, 4\pi R_{ft}^{2}} \tag{3-3}$$

If the gain of the radar antenna, and S/C ratio are given in db and range is given in nautical miles, the equation must be changed to

$$\log^{-1}\left(\frac{S/C_{db}}{10}\right) = \frac{\sigma_b \log^{-1}\left(\frac{G_{db}}{10}\right)}{K\, 4\pi\, (R_{nm} \times 6076)^2} \tag{3-4}$$

The signal-to-clutter ratio is improved by the use of circular polarization which reduces the clutter return. Equation 3-4 is then modified as follows:

$$\log^{-1}\left(\frac{S/C_{db}}{10}\right) = \frac{\sigma_b \log^{-1}\left(\frac{G_{db}}{10}\right) \log^{-1}\left(\frac{I_p}{10}\right)}{K\, 4\pi\, (R_{nm} \times 6076)^2} \tag{3-5}$$

where

I_p = improvement in S/C ratio due to use of circular polarization on radar antenna.

then

$$\sigma_b = \frac{\left[\log^{-1}\frac{S/C_{db}}{10}\right] K\, 4\pi\, (R_{nm} \times 6076)^2}{\log^{-1}\left(\frac{G_{db} + I_p}{10}\right)} \tag{3-6}$$

Simplifying and rearranging terms gives:

$$a = \sqrt[4]{3/4\lambda^2 K\,(R_{nm} \times 6076)^2 \log^{-1}\left(\frac{S/C_{db} + L_v}{10}\right) \log^{-1}\left(\frac{L_p + L_t - G_{db} - I_p}{10}\right)}$$

Which simplifies further to:

$$a = \sqrt[4]{3/4K}\ \sqrt[2]{\lambda R_{nm} \times 6076}\ \log^{-1}\left(\frac{S/C_{db} + L_v}{40}\right) \log^{-1}\left(\frac{L_p + L_t - G_{db} + I_p}{40}\right) \quad (3\text{-}9)$$

Substitute now numerical values previously established for the following parameters:

K = 0.005 (previously defined)

L_p = 6 db (previously defined)

L_t = 6 db (previously defined)

I_p = 9 db (previously defined)

G_{db} = 32 db (previously defined)

λ = 0.1 feet (typical X-band wavelength)

Equation 3-9 then reduced to:

$$a = 1.15\sqrt{R_{nm}}\ \log^{-1}\left(\frac{S/C_{db} + L_v}{40}\right) \quad (3\text{-}10)$$

The edge of the reflector is now related in terms of the three parameters of most interest to the problem: namely, range from reflector to the LEM, signal-to-clutter ratio considered acceptable for the radar display, and L_v which can be interpreted as a percentage of coverage or as the loss in signal involved in looking off at some angle away from peak return.

For the first family of curves S/C is set equal to 12.3 db and L_v is successively set equal to 6.5 db, 11 db, and 20 db for 60, 80, and 95 percent coverage of a quadrant, respectively. The value of a was then calculated as a function of range in nautical miles for the three cases. The data is presented in Figure 3-23 where it relates to a cluster of four circular edge reflectors which attempt to cover a hemisphere for a system that has no

particular azimuthal orientation. It is readily seen that an exhorbitantly large hemisphere is required for 95 percent coverage at a range of 20 n. mi. If the percentage of coverage is allowed to drop to 80 percent or the range to 5 n. mi., then edge lengths that might be possible are indicated.

Equation 3-10 was then solved for L_v and the following expression obtained:

$$L_v = 40\left[\log \frac{a}{1.15\sqrt{R_{nm}}}\right] - S/C_{db}$$

Three representative values of a were chosen: 10, 17.5, and 25 feet. L_v was then calculated as a function of range and transformed into percentage of coverage by Levines* curve. The family of curves shown in Figure 3-24 was then obtained. A study of these curves shows that an edge length of 17.5 feet (the largest considered feasible to fabricate and erect successfully) provide only 72 percent coverage at a range of 20 n. mi. Further, coverage does not exceed 95 percent even at 2 n. mi.

Attention was then directed to a uniquely oriented reflector. From a study of the coverage provided by a circular side reflector on a Lambert Azimuth Projection, it was determined that the angular covered required by the descent trajectory of LEM (±25 degrees in azimuth to 12 degrees $^{+8.0}_{-2.0}$ degrees in elevation) could be obtained by a single properly oriented reflector with the return signal dropping at most 3 db at the extreme corners of the coverage rectangle. Thus 100 percent coverage would be provided for L_v = 3 db. When this value and 12.3 db for S/C were substituted into Equation 3-10 the curve of a versus range shown in Figure 3-25 was obtained. This curve shows that a 12.5 foot reflector will provide 100 percent coverage provided it can be sufficiently accurately oriented on the lunar surface. A tolerance on alignment of ±2 degrees in both elevation and azimuth was assumed. It is believed that the Surveyor system can meet these alignment requirements.

If it were possible to degrade the signal to noise ratio, then the size of the uniquely oriented reflector could be reduced further. If a S/N ratio of 5 db is assumed instead of the 12.3 db used previously, Equation 3-10 gives a value of 8.5 feet for a range of 20 n.mi. This is not considered to be a significant decrease in size for such a large degradation in S/N ratio, hence it is not recommended.

---

*D. Levine and W. H. Welch,

CONFIGURATION SELECTION

The performance of the configurations examined during the course of the study has tended to confirm the initial assumptions which were based upon preliminary calculations that some form of corner reflector can best satisfy the performance requirements. As shown, the Van Atta array and bird cage Echo enhancer reaches dimensions which make fabrication complexity and system weight prohibitive. During the early part of the study, the bird cage size was based on the scaling laws presented in Reference 3-2. This led to the preliminary conclusion that as the range requirement is reduced the bird cage would scale down in such a way that it might be a workable system. However, after a more detailed analysis it has been shown that the 27-foot diameter reflector discussed previously would only provide acquisition and full tracking at 1.41 n.mi.

In an effort to take advantage of the absence of a polarization reversal for a two bounce reflector, a Biconic reflector configuration was examined. This configuration despite an overall gain improvement because of the absence of the polarization reversal, required 80 feet dimensions in order to satisfy the performance requirements. This size precluded its application because even if range is reduced to approximately 10 n. mi. the 40-foot bicone described earlier will not be able to provide the required performance.

The hemispherical four quadrant corner reflectors can be satisfactorily erected; therefore, the spherical or eight quadrant reflector does not merit further consideration because of the inherent weight and volume penalties. Further, due to the superior performance of a circular edge trihedral when contrasted to a triangular trihedral, the triangular trihedral cannot be considered a desirable shape for any of the quadrant reflectors. This is true despite the general advantage in weight of a triangular trihedral over the circular trihedral. This results since dimensionally the triangular trihedral must be greater to provide the same performance. Since degradation is a function of wavelength, the longer the dimensions the greater the degradation.

The comparison then reduces to one of two systems:

1) Hemispherical four quadrant corner reflector

2) Uniquely oriented corner reflector

As shown, the four quadrant corner reflector can never provide 100 percent coverage except in the near field. The coverage for the 35 foot diameter beacon starts at approximately 75 percent at 20 n. mi. and does not exceed 90 percent coverage until the range is reduced to about 12 n. mi. However, from a weight and packaged volume point of view even if the performance is acceptable, the beacon configuration may not be compatible with the overall weight requirement. In the area of operational simplicity and greater inherent reliability, the beacon configuration is superior to the uniquely oriented system. This is due to the absence of any unique orientation requirement. The beacon can be ejected from a relatively simple catapult. Further, it can be treated to ensure optical acquisition without the use of auxiliary optical beacons.

The uniquely oriented system can be designed to provide 100 percent coverage. Omnidirectivity is not required and as such the performance is predictable. In addition, the total weight, including auxiliary optical beacons, is less than the hemisphere. As range requirements are reduced, the beacon dimensions can be allowed to shrink and therefore the weight and volumes become closer to those values specified as objectives by NASA/USC. It should be emphasized that although this system is comparatively complex, it is not necessarily unreliable. Similar mechanisms and operational interface exist as payload items on the Surveyor vehicle. It is felt that this system's reliability can be designed to be consistent with the desired objectives. Therefore, this system represents the recommended configuration. The total weight of this system is approximately 30 pounds for 20 n. mi. radar acquisition.

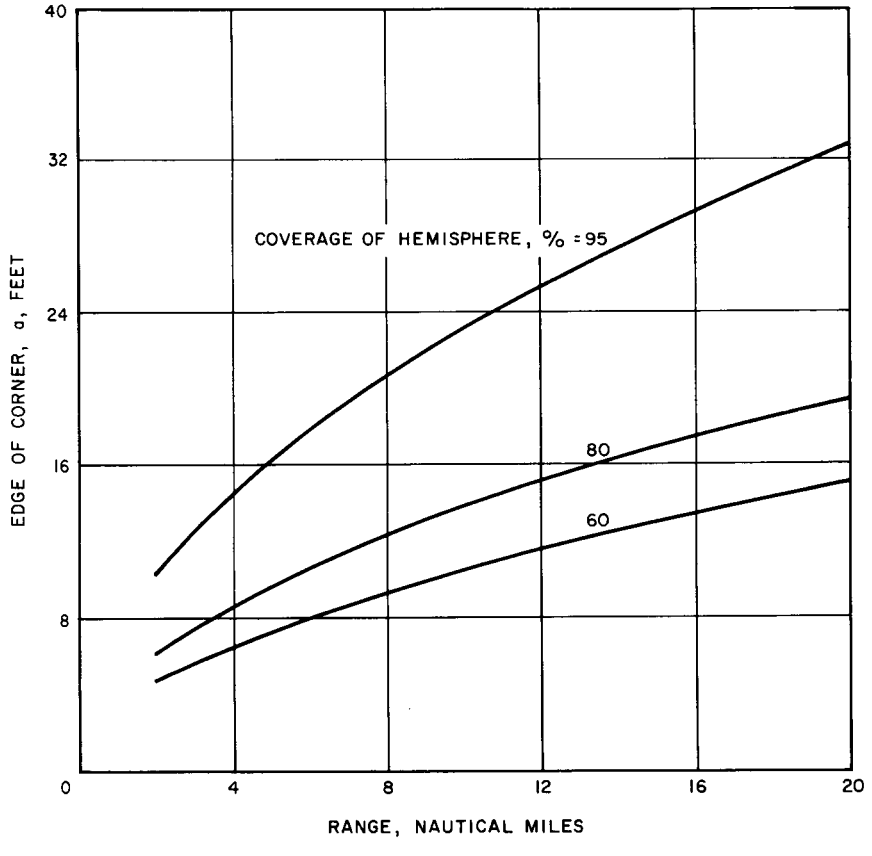

Figure 3-23. Reflector Size versus Range for Reflector Hemisphere

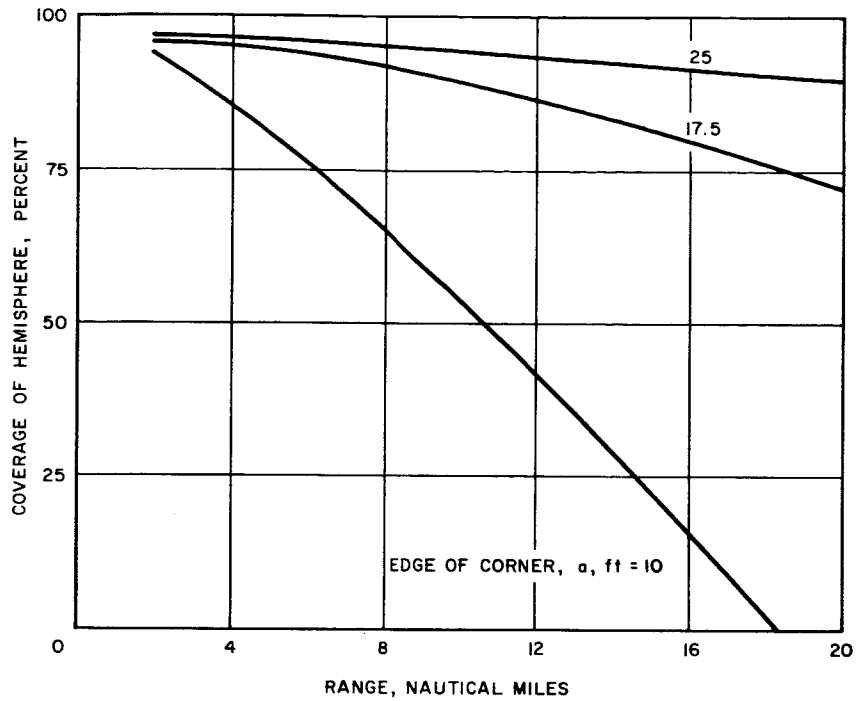

Figure 3-24. Percent Coverage versus Range for Hemisphere Reflector

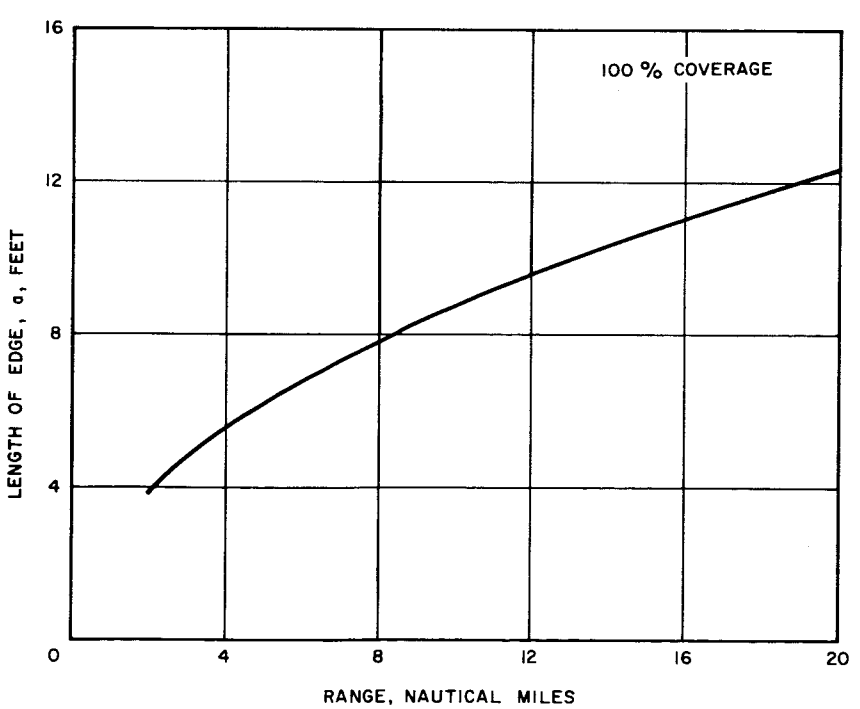

Figure 3-25. Size versus Range for Uniquely Oriented Reflector

Task 3.0 Preliminary Specification

Task 3.1 A final report shall be prepared consisting of a preliminary performance specification supporting studies which justify configuration selection, and identification of areas requiring further study. The areas requiring further study will include those design parameters for which empirical data has not been developed through a materials test program and which may therefore require modification at a later time.

3.12 PRELIMINARY SPECIFICATION FOR PASSIVE LUNAR MARKER BEACON

The specification included here represents the recommended beacon configuration.

PRELIMINARY SPECIFICATION FOR PASSIVE LUNAR MARKER BEACON

PREFACE

This specification presents preliminary performance requirements and configuration data.

1.0 SCOPE

This performance specification presents the technical requirements which must be met by a Passive Lunar Marker Beacon to be used by the Apollo as a navigational aid for lunar orbital determination and terminal descent guidance. The lunar surface marker may be carried to the lunar surface approximately 3 years before the first manned lunar landing. When the lunar expedition arrives the Apollo optics will be directed toward the surface while in lunar orbit to establish landing parameters. During landing, the marker will be used with the LEM R/R to pinpoint the landing areas.

2.0 APPLICABLE DOCUMENTS

To be determined.

3.0 REQUIREMENTS

3.1 Basic Objectives

a) The passive Lunar Marker Beacon shall be designed so as to provide a sufficient contrast against the lunar background to ensure a 95 percent probability of successful optical acquisition by the Apollo optics from a 200-n.mi. range.

b) The beacon shall be designed so as to provide a sufficiently large radar cross section to ensure acquisition and full tracking by the LEM rendezvous radar at a range of 20 n. mi.

c) The beacon shall be designed such that it may be transported to the lunar surface and subsequently deployed from an advanced Surveyor spacecraft.

d) The beacon shall be designed such that it does not preclude viewability during the deployment process by the spacecraft imaging system.

e) The probability of the marker providing satisfactory performance at the end of a 3-year lunar stay shall be at least 90 percent.

3.2 Optical Performance Requirements

3.2.1 The minimum apparent contrast as seen at the maximum range for detection shall be +1 compared to any nearby surface areas with slopes up to 15 degrees facing the direction of the sun.

3.2.2 Where minimum apparent contrast occurs at a solar elevation angle of 15 degrees, the luminance of the beacon shall be no less than that of a horizontal beacon with 290 square feet of surface area. Where minimum apparent contrast occurs at solar elevation angles of 25 degrees or greater, the luminance of the beacon shall be no less than that of a horizontal beacon with 155 square feet of surface area.

3.2.3 The spot sizes specified in 3.2.2 assumed that optical reflective surface shall have a minimum albedo of 0.60 after aging for 3 years in the lunar environment. For other albedos, the areas given in 3.2.2 shall be modified by the following relationship:

$$\frac{A_2}{A_1} = \frac{0.535}{\alpha_2 - 0.065}$$

where A_1 is the area given in 3.2.2, α_2 is the alternative albedo and A_2 is the corresponding area. α_2 shall not be less than 0.26.

3.3 Radar Performance Requirements

3.3.1 The electrical characterisitcs of the corner specified below are based on the allowances of 6 db loss in area due to polarization mismatch, 6 db loss due to manufacturing tolerances, and 3 db loss due to the required angle of coverage.

3.3.2 Scattering cross section (measured values):

1)	Minimum peak value	2×10^7 square feet
2)	Minimum value over required field of view θ = 45 to 55 degrees, ϕ = 18 to 54 degrees	1×10^7 square feet

3.3.3 Polarization:

Accepts circular; returns linear

3.3.4 Size:

Edge length of corner	12.0 feet minimum

3.3.5 Surface flatness:

RMS deviation from true plane	±0.050 inches

3.3.6 Corner squareness:

RMS deviation from 90 degrees at each corner	±0.15 degrees

3.3.7 Reflection Coefficient of hexagonal aluminum material to be used on two sides of corner	0.93 minimum

3.3.8 Reflection coefficient of parallel strip aluminum material to linearly polarized wave:

1) E vector parallel to strips	0.95 minimum
2) E vector perpendicular to strips	0.15 maximum

3.4 Environmental Criteria

This section presents the overall environmental criteria within which the passive beacon must operate. These criteria shall be used as the basis for designing and testing all electrical, electronic, and mechanical assemblies and subassemblies of the lunar passive beacon to be mounted on the Surveyor spacecraft. The environmental criteria presented is what is known to date and may change with additional data obtained about the moon and cislunar space.

ENVIRONMENTAL CRITERIA

3.4.1 Launch Environment

3.4.1.1 Static Acceleration

5.9 longitudinal

0.4 lateral

3.4.1.2 Pressure Changes

Pressure reductions inside capsule during the boost phase will decrease from atmospheric to 10^4 Torr in 3 minutes.

3.4.1.3 Vibration (assembly)

Table 3-9 presents a summary of assembly vibration.

TABLE 3-9. ASSEMBLY VIBRATION

Frequency, cps	Level g, rms	Remarks
100 to 1500	2.0	Throughout powered flight, except during liftoff, maximum q and/or Mach 1.
100 to 1500	4.5	During liftoff, maximum q and/or Mach 1.

3.4.2 Cislunar Environment (Cruise Phase)

3.4.2.1 Micrometeorite fluxes reduced from 10^2-10^3 below the values near earth.

3.4.2.2 Radiation fluxes will be omnidirectional instead of only over a hemispherical shape.

3.4.2.3 Temperature is a function of the attitude and orientation of the spacecraft. Typical Surveyor component temperature ranges are:

a) Antenna -100° to +250°F

b) All other components + 10° to +250°F

c) Generally + 20° to +100°F

3.4.2.4 Time spent in the above environment is no more than 96 hours (more like 66 hours).

3.4.3 Lunar Environment

3.4.3.1 Temperature. The lunar surface temperature ranges from a maximum of approximately 390°K at the subsolar point to a minimum of approximately 80°K during the lunar night. In the shadows during the lunar day the temperature is estimated to be 120°K.

3.4.3.2 Pressure. The surface pressure has been estimated to be between 10^{-10} to 10^{-13} Torr.

3.4.3.3 Slopes. Slopes greater than 15 degrees will not be encountered in the local areas designated for Apollo landing. The probability of landing on a slope of 15 degrees or greater is estimated to be about 0.01.

3.4.3.4 Surface Roughness. Designated landing area is relatively free from protuberances in excess of 10 cm. Occasional boulders or protuberances of

1 to 100 meters are present. Generally sand, gravel, or cobblestone sized fragments overlaying a possible frothy rock substrate of very low bearing pressure.

3.4.3.5 Surface Condition. Surface hardness may vary from that of hard rock to that of soft inelastic material with high internal friction. The extremes of compressive strength anticipated of the lunar surface materials are:

a)	Hard rock:	4000 to 25,000 psi
b)	Soft Material:	A static load of 1 psi will penetrate no more than 10 cm. A dynamic load of 12 psi will penetrate no more than 30 cm below the surface.

3.4.3.6 Dust Condition. Surface dust conditions are uncertain. Dust thickness in the low areas may vary from a few millimeters to several meters. During the lunar day the photoionization may electrostatically cause a dust cushion 1 meter thick.

3.4.3.7 Albedo. The visual albedo is estimated to be as follows:

a)	Darkest spot (inside oceanus procellarium)	0.051
b)	Dark plains (maria)	0.065
c)	Brighten plains (paludes)	0.091
d)	Mountain regions (terrae)	0.105
e)	Crater bottoms	0.112
f)	Bright rays	0.131
g)	Brightest spot (Aristaichus)	0.176
h)	Bright spots around maria	0.12-0.15

3.4.3.8 Reflective Properties. The radar reflective properties of the lunar surface in the wavelength region from one meter to ten cm are estimated to be as follows:

a)	Average effective reflectivity	0.01 to 0.05
b)	The ratio of specular reflected power to diffuse reflected power	9.0
c)	Average value of reflectivity to be used in determining beacon parameters is	0.05

3.4.3.9 Thermal Properties. The thermal properties of the lunar surface material cover the range represented by an infinite layer of material A (extreme insulating model) or an exposed layer of material B of infinite thickness (extreme conducting model). The estimates of the thermal constants for these models are shown in Table 3-10.

TABLE 3-10. THERMAL CONSTANTS OF LUNAR SURFACE MATERIAL

Material	Thermal Conductivity, cal $cm^{-1} sec^{-1} (C°)^{01}$	Density, gm cm^{-3}	Specific Heat, cal gm^{-1} (at 25°C)
A	6×10^{-6}	0.0	0.2
B	4×10^{-3}	3.0	0.2

3.4.3.10 Magnetic Fields. The magnetic field of the moon is estimated to be less than 10^{-3} Gauss.

3.4.3.11 Micrometeorite Particles. The lunar surface shall be subjected to the meteoritic fluxes shown in Figure 3-26.

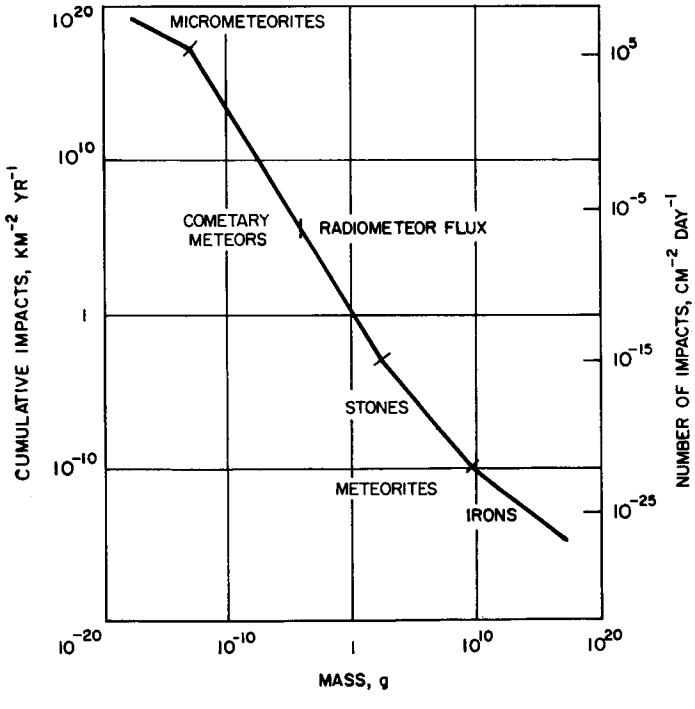

Figure 3-26. Meteorite Fluxes

3.4.3.12 Secondary Dust Particles. The primary meteoritic particles are assumed to generate secondary particles with the following characteristics:

a) Velocities about 0.1 the primary particle.

b) Total mass generated may be 10 to 100 times the mass of the primary particle.

3.4.3.13 Ionosphere. It is possible that near the surface of the moon there exists an ionosphere containing about 10^4 electrons cm^{-3}.

3.4.3.14 Electromagnetic Radiation. The electromagnetic radiation affecting the life time of the passive beacon is listed as follows:

a) Solar constant.... 1.39×10^6 ergs cm^{-2} sec^{-1}

b) X-ray ($x = 1\text{-}10$ Å)
quiet sun: $10^{-8} - 10^{-3}$ ergs cm^{-2} sec^{-1} $(Å)^{-1}$
active sun: $10^{-6} - 10^{-2}$ ergs cm^{-2} sec^{-1} $(Å)^{-1}$

c) γ-rays ($\lambda < 1$ Å)
quiet sun: $< 10^{-8}$ ergs cm^{-2} sec^{-1} $(Å)^{-1}$
active sun: $< 10^{-5}$ ergs cm^{-2} sec^{-1} $(Å)^{-1}$

d) Ultra Violet: $500 < \lambda < 3000$ Å
5 ergs cm^{-2} sec^{-1} $(Å)^{-1}$

3.4.3.15 Particle Radiation. The particle radiation (consisting primarily of protons) at the surface of the moon is as follows:

a) Solar wind over a 3 year period:
3×10^7 to 3×10^8 protons cm^{-2}
for $2 < E < 20$ Kev.

b) Solar flare protons ($E > 0.2$ Mev):

1966 to 1969	1.6×10^{13} protons cm^{-2}
1967 to 1970	1.8×10^{13} protons cm^{-2}

c) Cosmic rays:
10^8 particles cm^{-2} (primarily α particles)

3.4.3.16 Surface Gravitation. The gravitational acceleration at the lunar surface has been calculated to be 162 cm sec^2 -0.165 that of the planet earth.

3.4.3.17 Lunar Topography. Topographical description of the lunar surface is consistant with the contour charts of the Aeronautical Chart and Information Center and the recent Ranger 7 and 8 photographs.

3.5 Apollo System Characteristics

The performance and configuration data presented herein is based upon the environment specified in 3.4 and the Apollo characteristics which follow:

3.5.1 Rendezvous radar parameters:

a)	Modulation	207.5 cps 6.64 kc, 212.5 kc
b)	Type of modulation	phase
c)	Modulation index	0.3
d)	Antenna gain (transmit, sum)	32 db over isotropic
e)	Polarization	Circular, 2 db axial ratio
f)	Difference pattern null	30 db below sum pattern
g)	Transmit frequency	X-band
h)	Receiving frequency	X-band $\frac{241}{240}$ x receiving frequency is to be transmitted by transponder
i)	Noise figure	9.5 db
j)	IF bandwidth	30 mc
k)	Transmitter power output	300 mw
l)	Long term frequency stability	1×10^{-7}
m)	Frequency difference between LEM and CSM RR	Approximately 200 mc
n)	Skin track signal to clutter ratio	5 db for acquisition, 12 db for full tracking accuracy

3.5.2 Optical system parameters

a) The objective lense of the Apollo sextant is 1.58 inches in diameter.

b) Overall light transmission of 5 percent.

c) Field of view 2 degrees

d) Magnification X28

e) The illuminating source may be between 15 and 45 degrees above the horizon. (evening or morning)

3.5.3 Trajectory Parameters

a) The orbital plane of the CSM is identical to the landing trajectory plane.

b) The Lunar Orbit is retro-grade, and the LEM will approach the landing site from the east.

c) The nominal loss from the LEM vehicle to the landing site will be 12 degrees with respect to the horizontal. Loss may be between 10 and 20 degrees with respect to the horizontal.

d) The beacon is to be placed within a 45 degree sector behind the desired landing site, (symmetric about the nominal trajectory plane) or within a 1,000 foot circle around the landing site. A plus or minus 35 degrees margin is desired from either side of the normal approach path so the LEM approach to the site can occur within a 50 degree sector.

3.6 Beacon Functional Description

The beacon system shall consist of the following:

a) A uniquely oriented circular edge trihedral corner reflector whose vertical sides have been treated to provide a diffuse optical reflective surface.

b) Two independent flat optical beacons deployed around the spacecraft and treated so as to provide a diffuse reflective surface.

c) A deployment mechanism which can uniquely orient the major axis of symmetry of the trihedral corner reflector along the nominal LEM approach.

d) A deployment mechanism which can deploy the separate optical beacons a sufficient distance from the spacecraft.

3.6.1 Circular Edge Trihedral Corner Reflector

3.6.1.1 Size. The beacon edge length shall be a minimum of 12 feet. This edge length assumes the following:

a) Construction tolerances which do not reduce the cross section by more than 6 db.

b) A net 3 db gain due to polarization effects.

c) Errors in predicting the direction of the major axis of symmetry which do not exceed ± 2 degrees (1σ)

3.6.1.2 RF Reflector Surfaces. Two sides of the reflector surfaces shall be comprised of perforated or etched aluminum, on a polymeric film base. The geometry of the perforations shall be such that the reduction in reflectivity is negligible although 70 percent of the aluminum is etched away. The third side shall consist of etched aluminum-film composite in a geometry which yields a parallel wire effect and which shall be used to reduce the circularly polarized incident electromagnetic waves to a linear polarization.

3.6.1.3 Optically Treated Surfaces. The two nominally vertical sides of the reflector shall be pigmented with an optical reflective material in a polka dot pattern. The total area shall be 50 square feet per inner side, and 25 square feet per outer side.

3.6.1.4 Physical Characteristics. The beacon shall be self-erecting and rigidizing and capable of being stowed in a compact configuation during the cislunar trajectory. A packing factor of 3X will be used in stowing the beacon in its deployment canister.

3.6.2 Separate Optical Beacons

3.6.2.1 Two independent flat beacons shall be deployed within 50 feet of the spacecraft. The beacon surface area shall be 100 square feet each.

3.6.2.1 The beacons shall be self-erecting and capable of being compactly stowed during the cislunar trajectory.

3.6.3 Uniquely Oriented Boom Mechanism

The extendible boom system shall uniquely orient a circular side corner reflector. The system shall mount on the top portion of the spacecraft mast. With commands from the telecommunication system, the deployment mechanism shall unlock, drive to desired position, extend boom, and release reflector for inflation.

3.6.3.1 Azimuth Positioning System. This system is located at the top of the spacecraft mast. A bearing mounted hub rotatable about the mast is gear driven by an integral stepper motor-gear train in response to positioning signals from the telecommunication system. An explosive pin puller is used to lock the system in the stowed position.

3.6.3.2 Stepper Motor; Gear Train. The drive unit will consist of a bi-directional solenoid stepping motor with detent and planetary gear reduction, contained within a sealed enclosure. Rotary output will be transmitted through a dynamic seal. The drive unit shall be capable of holding its load in any position without external power applied.

3.6.3.3 Exposed Bearings and Gears. Bearings and gears exposed to the lunar environment will be of a type to withstand the most severe loads and also provide a margin above the length of service required.

3.6.3.4 Extension Boom. This unit is mounted on the output gear of the azimuth drive. The extension boom will consist of telescoping sections of seamless tubings which are extended by controlled flow of gas from a high pressure gas bottle. Command signals from the telecommunication system will unlock the boom in the stowed condition and actuate the squib valve.

3.6.3.5 Canister. The canister will contain the folded reflector and inflating equipment and will be swivel mounted to the end of the boom. The canister will be unbalanced to orient it with the local vertical. Electrical energization of the squib actuated latch will open canister to release reflector for inflation. The canister will be leak tight to permit evacuation for purpose of packing reflector.

3.6.3.6 Pully-Cable Suspension. This unit is mounted on the canister and allows the reflector to align with the local vertical. A pair of pulleys with their grooves in line and parallel to the boom axis will extend down from the canister. A cable whose ends are attached to the reflector torus will run over the pulley grooves.

3.6.4 Optical Beacon Deployment Mechanism

A spring actuated catapult shall be utilized to deploy the beacons. The catapult shall consist of 1) an outer canister which is mounted to the spacecraft at the angle required to achieve the proper ballistic trajectory, and 2) a compressed spring which when released imparts sufficient energy to the beacons to eject them from the canister.

3.6.5 Each of the marker beacons shall utilize an erection system which is completely automatic after the part is deployed from the vehicle.

3.6.6 Only materials resistant to the lunar environment for at least 3 years shall be used in construction of the reflector webs, the optical portion of the structure and the rigidized components.

3.6.7 Thermal control coatings should maintain the structure at a maximum temperature of 100°F initially and the $\frac{\alpha}{\epsilon}$ ratio should not change more than 15% over the 3 year lunar exposure.

3.7 RELIABILITY

The reliability of the beacon system exclusive of the parent vehicle shall be consistent with the objectives specified in 3.1.

4.0 QUALITY ASSURANCE

To be determined.

3-27 A. Damusis, H. Wissman, A. Sanger, "Impregnants for Expandable Rigidizable Aerospace Structures," Wyandotte Chemicals Corporation WPAFB Technical Documentary Report ASD-TDR-63-588, July 1963.

3-28 I. W. Russell, N.S. Hanssen, W.J. McKillip, "Development of an Inflatable Self-Rigidizing Space Shelter and Solar Collector from Honeycomb Sandwich Material," Viron Division, Geophysics Corporation of America, WPAFB Technical Documentary Report, APL TDR 64-29, WPAFB, December 1963.

3-29 Private communication from F. Gerring of Goodyear Aerospace Company.

3-30 E. Rottmayer, "Preliminary Design of a Lenticular Satellite," Unmanned Spacecraft Conference, Los Angeles, California, March 1965.

REFERENCES

3-1 D. Levine and W. H. Welch, "Spatial Coverage of Radar Reflectors," IEEE Transaction on Aerospace, April 1964, p 161 and 164.

3-2 J. Croney and W. H. Delany, "A New Type of Omni-Azimuthal Radio-Echo Enhancer," Microwave Journal, March 1963, p 105-109.

3-3 G. C. Southworth, "Principles and Applications of Waveguide Transmission," D. Van Nostrand Company, 1950, p 481.

3-4 L. A. McKellar, "Effects of the Spacecraft Environment on Thermal Control Materials Characteristics," Spacecraft Thermodynamics Symposium, 28 March 1962, Palo Alto, California.

3-5 H. R. Blackwell, "Contrast Thresholds of the Human Eye," JOSA, Volume 36, p 625-43, 1946.

3-6 "Surveyor Block II Phase – A Study of Lunar Terrain Assessment," JPL TM 33-172, 20 April 1965.

3-7 G. D. Kuiper and B. M. Middlehurst, "Planets and Satellites: The Solar System," Volume III, University of Chicago Press, 1961.

3-8 J. Bensko, "Lunar Surface Conditions," NASA MTP-XN-63-1, 15 March 1963.

3-9 "Environmental Specifications for Apollo Scientific Equipment," North American Document ME 999-0051; Grumman Document LED-520-C.

3-10 "Meteoric Infall and Lunar Surface Roughness," Bell Communications, Inc., 31 January 1964.

3-11 "Natural Environment and Physical Standards for Project Apollo," NASA M-D E 8020.008A, August 1963.

3-12 H. J. Smith and E. V. P. Smith, "Solar Flares," MacMillin Corporation, 1963.

3-13 R. Baldwin, Face of the Moon, Oxford Press.

3-14 Topographical Charts of the lunar surface, Aeronautical Chart and Information Center.

3-15 F. H. Bratten, S. J. Stenlund, and A. J. Wendt, "Advanced Rigidized Membrane Material Development," Aerospace Expandable Structures Conference Transactions, Dayton, Ohio, October 1963.

3-16 N. J. Broadway, R. W. King, S. Palinchak, "Space Environmental Effects on Materials and Components," Report RSIC-150, and Appendix B "Plastics" and Appendix F "Laminates," Battelle Memorial Institute, April 1964.

3-17 L. Isenberg, "Plastic Materials in the Space Environment," AD 435245, North American Aviation, Inc., December 1963.

3-18 L. D. Jaffee and J. B. Rittenhouse, "How Materials Behave in Space," Jet Propulsion Laboratory, Materials in Design Engineering, September 1962.

3-19 G. F. Pezdirtz, "Polymers for Spacecraft," Langley Research Center, Modern Plastics, 1963.

3-20 W. A. Riehl, W. L. Looney, S. V. Caruso, "Compatibility of Engineering Materials with Space Environment," ADU 39693, George C. Marshall Space Flight Center.

3-21 N. E. Wahl, "The Effects of High Vacuum and Ultraviolet Radiation on Reinforced Plastics," SPE Journal, Volume 17, No. 8, August 1961.

3-22 H. L. Price, "Mechanical Properties of Composite Materials for Expandable Space Structures," Aerospace Expandable Structures Conference, Transactions, Dayton, Ohio, October 1963.

3-23 R. J. Slater, "Design and Fabrication of Inflatable and Rigidizable Passive Communication Satellites," Aerospace Expandable Structures Conference Transactions, Dayton, Ohio, October 1963.

3-24 G. A. Zerlaut and Y. Harada, "Stable White Coatings," Report No. IITRI-C 207-27, IIT Research Institute, January 1964.

3-25 L. B. Keller and S. Schwartz, "Rigidization Techniques for Integrally Woven Composite Constructions," Hughes Aircraft Company, WPAFB Technical Documentary Report ML-TDR-64-299, September 1964.

3-26 J. L. Schwendeman, J. L. Robertson, and I. O. Salyer, "Gelatin as a Possible Structural Material for Space Use," Monsanto Research Corporation, Dayton, Ohio, WPAFB Technical Documentary Report, ASD-TDR-63-444, May 1963.

4. FUTURE EFFORT

Because of the parametric nature and time constraints of the study, it was not possible to fully develop a set of system characteristics for the selected design. Therefore it is recommended that follow on effort be initiated which will lead to the preparation of a design specification, model development, and performance evaluation of the beacon models.

The following represents a preliminary statement of work for the followon activity required to ensure an orderly continuation of the passive marker effort.

1.0 Studies shall be conducted of large corner reflectors of the type studied under this contract. Experimental and theoretical investigations shall be made to determine how closely measured results follow the theoretical results.

2.0 Investigations shall be made of the possibilities of producing composite films using photolyzable material and perforated aluminum foil.

3.0 Space environmental tests shall be conducted on the materials which are applicable to beacon fabrication.

4.0 Investigation shall be conducted on the possibility of fabricating FFP Tedlar and Kapton H in films thinner than the 1 mil currently available.

5.0 Fabrication tests shall be conducted to determine factors such as folding and packaging techniques, pressurization media required, optimum fabrication techniques, band strengths obtainable, and dimensional tolerances. This effort should be conducted initially on subscale models followed by full scale fabrication.

6.0 A detailed analyses on the effect of adding the uniquely oriented beacon to the Surveyor spacecraft shall be conducted.

7.0 Detailed analyses leading to a refined preliminary design for a uniquely oriented deployment mechanism shall be conducted.

Independent Passive Optical Beacon

If an independent passive visual beacon were to be used, i. e., if the radar beacon were some device which did not provide large surface areas which could be suitably pigmented, it is believed that the optimum shape would be a right circular cone deployed with base down. The diameter of the base would be about 20 feet and the total apex angle would be about 120 degrees. If this cone fell on a slope of 15 degrees or less at least half of the surface would always be illuminated and at least half would always be visible. While for high solar and observer elevations all of the surface would be illuminated and visible. Studies should be undertaken to optimize the apex angle and determine the minimum dimensions to guarantee specified visibility margins. Figure 4-1 shows the configuration of this type of marker, and its method of construction and deployment.

In this marker a loose web will be expanded by the encircling torus, similar to that shown in Figure 4-1. However, this design also utilizes a center erected and rigidized pole to form a cone after erection is complete. By using a center pole twice the required height, as shown, the structure can be simply deployed and will always become conical with no special orientation required. The weight and packaged volume of this beacon is well within the 10-pound and 250-cubic inch size limitations for a passive beacon.

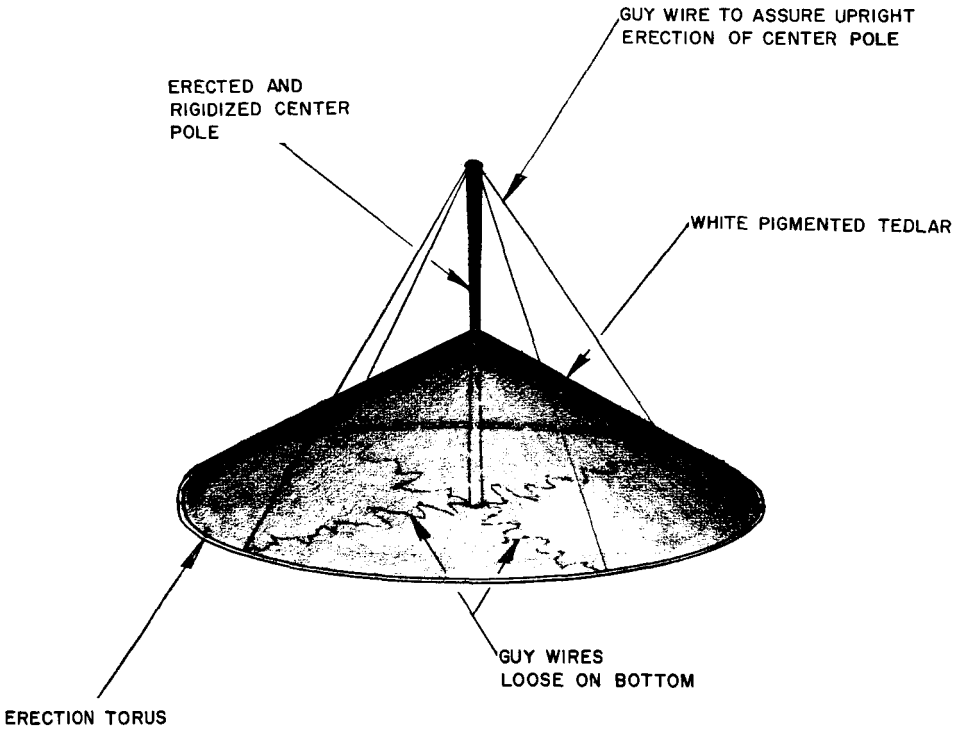

Figure 4-1. Independent Passive Optical Beacon