NASA CONTRACTOR REPORT

NASA CR - 61049

NASA CR - 61049

FACILITY FORM 602

N65-24015 (ACCESSION NUMBER)

108 (PAGES)

CR-61049 (NASA CR OR TMX OR AD NUMBER)

(THRU)

1 (CODE)

11 (CATEGORY)

APOLLO LOGISTICS SUPPORT SYSTEMS MOLAB STUDIES

LUNAR SHELTER/ROVER CONCEPTUAL DESIGN AND EVALUATION

Prepared under Contract No. NAS8-5307 by

E. C. San Juan

HAYES INTERNATIONAL CORPORATION
Missile and Space Support Division
Apollo Logistics Support Group

GPO PRICE $ _____

OTS PRICE(S) $ _____

Hard copy (HC) $4.00

Microfiche (MF) .75

For

NASA - GEORGE C. MARSHALL SPACE FLIGHT CENTER
Huntsville, Alabama

November 1964

CR-61049

APOLLO LOGISTICS SUPPORT SYSTEMS
MOLAB STUDIES

LUNAR SHELTER/ROVER CONCEPTUAL DESIGN AND EVALUATION

By

E. C. San Juan

Distribution of this report is provided in the interest of information exchange. Responsibility for the contents resides in the author or organization that prepared it.

Prepared under Contract No. NAS 8-5307 by
HAYES INTERNATIONAL CORPORATION
Missile and Space Support Division
Apollo Logistics Support Group

For

PROPULSION AND VEHICLE ENGINEERING LABORATORY

NASA-GEORGE C. MARSHALL SPACE FLIGHT CENTER

TABLE OF CONTENTS

Section	Title	Page
1.0	SUMMARY	1
2.0	INTRODUCTION	4
3.0	ASSUMPTIONS AND GUIDELINES	6
3.1	Mission	6
3.2	Payload	6
3.3	LTV	7
3.4	SHELAB	8
4.0	ENVIRONMENT CONSIDERATIONS	9
4.1	Radiation	9
4.2	Meteoroids	11
4.3	Lunar Surface	11
5.0	MISSION DESCRIPTION	16
5.1	General	16
5.2	Scientific Mission Requirements	18
5.2.1	Stationary Instruments	18
5.2.2	Portable Instruments	19
5.2.3	Cabin Instruments	20
5.2.4	Mission Trip Parameters	21
5.2.5	Lunar Drilling	21
5.2.6	Operational Comment	22
6.0	SHELAB DESIGN	24
6.1	General	24
6.2	Shelter Design Approaches	25
6.2.1	Cabin Size	37

TABLE OF CONTENTS

Section	Title	Page
6.2.2	Cabin Shape	37
6.2.3	Cabin Wall	44
6.2.4	Airlock	44
6.2.5	Bubble	47
6.2.6	Azimuth Leveler	47
6.2.7	Radiator	50
6.3	Life Support Considerations	53
6.4	SHELTER Power Considerations	54
6.5	Communication Considerations	56
7.0	LTV DESIGN	58
7.1	General	58
7.2	Vehicle Design Approach	59
7.2.1	Storage Compartment	59
7.2.2	Lunar Dust Covers	63
7.3	Vehicle Mobility and Locomotion	63
7.3.1	Wheels	64
7.3.2	Steering	70
7.3.3	Suspension System	71
7.3.4	Braking System	72
7.4	Vehicle Unloader	73
7.5	LTV Power Considerations	77
7.6	Communication	77
7.7	Navigation	79
7.8	Vehicle Survivability	81

TABLE OF CONTENTS

Section	Title	Page
	7.8.1 Space Suit and Backpack	81
	7.8.2 Flying Belt	82
8.0	OPERATIONAL CONSIDERATIONS	85
	8.1 Assembly of the ALSS Space Vehicle	85
	8.2 Lunar Landing	86
	8.3 Unmanned Lunar Operation	86
	8.4 Manned Lunar Mission	90
9.0	INERFACE CONSIDERATIONS	92
10.0	WEIGHT SUMMARY CONSIDERATIONS	93
	10.1 ALSS Summary Weight	93
	10.2 System Weight Summary and Deployment	94
11.0	CONCLUSIONS AND RECOMMENDATIONS	95
	REFERENCES	96

LIST OF ILLUSTRATIONS

Figure	Title	Page
1-1	SHELAB/LTV Concept	2
2-1	Lunar Base	5
4-1	Meteoroid Shielding	12
4-2	Meteoroid Shielding	13
4-3	Slope Data	14
5-1	Bonpland and Maria Nobium Region	17
5-2	LTV Scientific Equipment	23
6-1	SHELAB/LTV Concept	27
6-2	SHELAB/LTV Concept	29
6-3	SHELAB Equipment Distribution	31
6-4	ALSS Payload Envelope	33
6-5	ALSS Payload Envelope	35
6-6	Cabin Diameters	38
6-7	Proposed SHELAB Cabin	39
6-8	Proposed SHELAB Equipment Distribution	41
6-9	SHELAB Cabin	43
6-10	Cabin Wall Cross Section	45
6-11	SHELAB Leveler	48
6-12	Cabin Azimuth Leveler	51
6-13	LEM/T Azimuth Leveler	52
6-14	Fuel Cell Module (Closed System Schematic)	55
6-15	SHELAB/LTV Communications Link	57
7-1	Proposed LTV	60

LIST OF ILLUSTRATIONS (Cont.)

Figure	Title	Page
7-2	Proposed LTV	61
7-3	LTV Concept 2	62
7-4	Tri-Flexo Wheel (Cross Section Detail)	68
7-5	Tri-Flexo Wheel	69
7-6	Unloading System Sequence	74
7-7	Unloading System Sequence	75
7-8	LTV Unloader	76
7-9	LTV Fuel Cell Module (Open Cycle System Schematic)	78
7-10	Flying Belt Unit	83
7-11	Flying Device	84
8-1	Proposed ALSS Module	87

LIST OF TABLES

Table	Title	Page
7-I	LTV Mobility Data	65
7-II	LTV Lunar Surface Analysis	66
7-III	Mobility Comparison	67

DEFINITIONS

SHELAB	For the purpose of this report, the two-man lunar shelter laboratory (SHELAB) represented here is considered to be a scientific laboratory and shelter, providing protection for astronauts under lunar environmental conditions.
LTV	The single-man lunar traversing vehicle (LTV) is considered to be a wheeled, transportable, lightweight, self-propelled vehicle capable of negotiating the lunar terrain. It will provide transportation and scientific instrumentation for lunar exploration and survey.
ALSS	The Apollo Logistics Support System (ALSS) consists of the launch vehicle, the spacecraft, the flight crew, the ground support systems, and the assigned payload.
ALSS PAYLOAD	The ALSS payload is the configuration of surface operations equipment transported to the lunar surface on a single ALSS logistics carrier.

LEM TRUCK	The lunar excursion module-truck (LEM/T) is the automated unmanned version of the LEM descent stage designed to transport lunar payloads from orbit to the lunar surface.
ALSS MODULE	The ALSS module is the combination of an ALSS payload and the LEM-Truck.
ALSS SPACECRAFT	The ALSS spacecraft is the combination of the ALSS module, the command module, the service module, the lunar excursion spacecraft, and the adapter.
ALSS SPACE VEHICLE	The ALSS space vehicle is the combination of the ALSS spacecraft and the Saturn V launch vehicle.
LAUNCH VEHICLE	The launch vehicle is the Saturn V, composed of the S - IC booster stage, the S - II stage, the S - IV B stage, and the instrument unit.
ASSUMPTIONS	Assumptions are defined as criteria or conditions used as study guidelines, which may change during the iterative process, provided that the basic study ground rules are not affected.

ABBREVIATIONS

ALSS	-	Apollo Logistic Support System
S-IC	-	Booster Stage
SII	-	Second Stage
SIV B	-	Third Stage
IU	-	Instrument Unit
CSM	-	Command/Service Module
CM	-	Command Module
SM	-	Service Module
LES	-	Lunar Excursion Spacecraft
BA	-	Booster Adapter
ALSSM	-	Apollo Lunar Support System Module
LEM/T	-	Lunar Excursion Module - Truck
SSE	-	Scientific Station Equipment
ECS	-	Environmental Control System
IMU	-	Inertial Measuring Unit
LEM	-	Lunar Excursion Module
SNAP	-	System for Nuclear Auxiliary Power
T/M	-	Telemetry
MOLAB	-	Lunar Mobile Laboratory
SHELAB/LTV	-	Shelter Laboratory/Lunar Traversing Vehicle

1.0 SUMMARY

24015

This document represents the evaluation of past efforts on lunar shelters and small roving vehicle payload combinations, and the development of the most promising design concept.

It also shows the capability of a lunar shelter-laboratory (SHELAB) to provide housing and support equipment for the scientific exploration of the lunar surface, and discusses the design of the shelter. The proposed shelter will support two astronauts for a 14-day mission. This shelter will be the payload of the LEM/T, and includes the one-astronaut traversing vehicle (LTV) which will be utilized for traversing, exploring, drilling, and other missions designated for the roving vehicle, as shown in Figure 1-1.

Author

The LTV will be unloaded from the LEM/T, and will be manned by astronauts or remotely operated from either the LEM or the earth station.

To the extent possible, the study approach considers only that part of the operational analysis which requires early consideration in the design of the SHELAB/LTV.

Recommended operational and control systems of the SHELAB/LTV were selected on the basis of trade-offs which primarily considered the adequacy of the astronaut support, system versatility, power and weight requirements, and other data pertinent to the proposed concept.

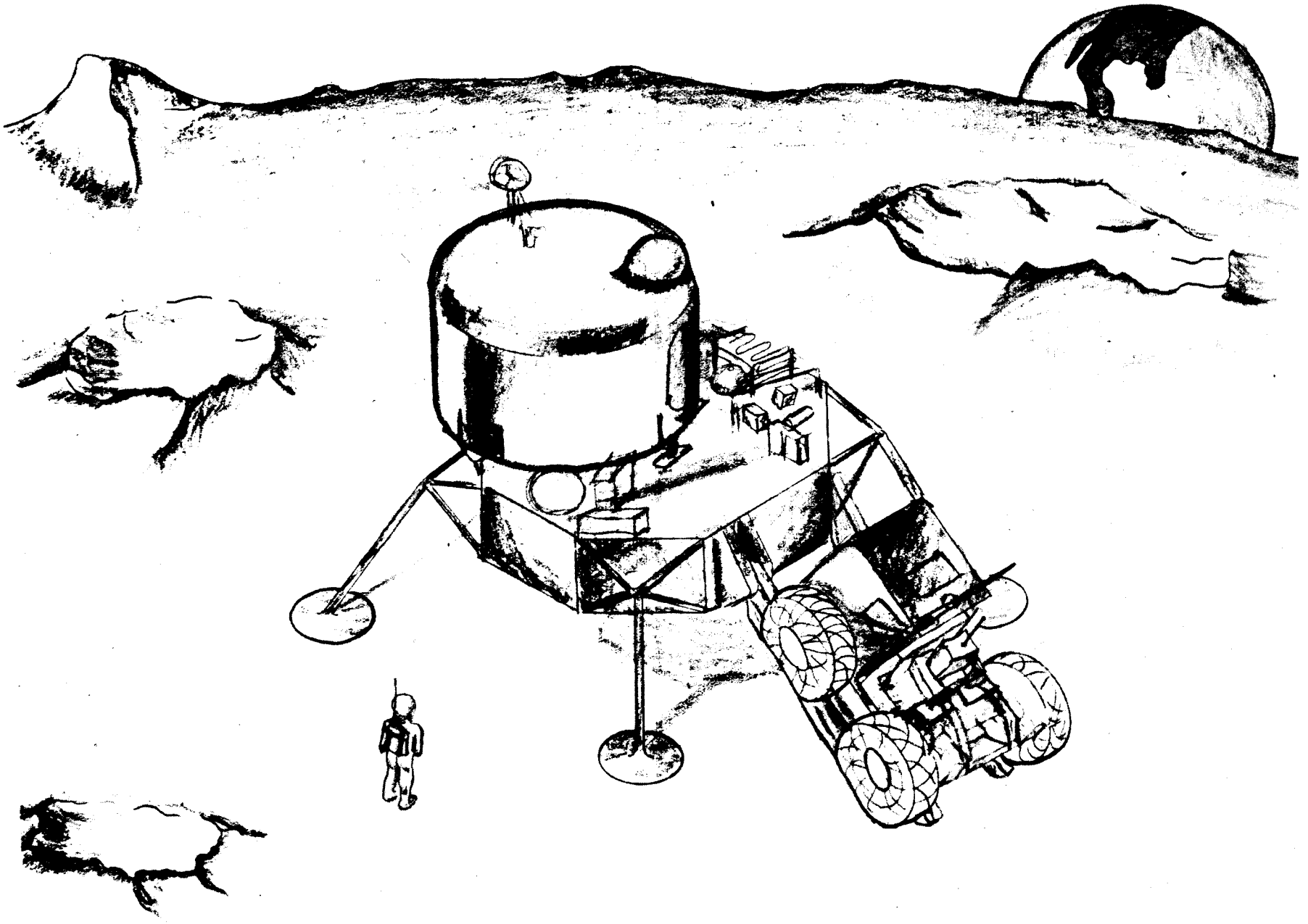

FIGURE 1-1. SHELAB/LTV CONCEPT

Considerable data on SHELAB and LTV subsystems was extrapolated from previous MSFC work on shelter and mobile laboratory systems. This work was completed by the several MSFC laboratories and groups involved in lunar surface system studies and references are included at the end of this report.

2.0 INTRODUCTION

The present space efforts are directing great emphasis toward placing men on the moon at the earliest possible date. Although delivery and return requirements are of utmost importance, early lunar surface operations also must receive careful consideration.

The early exploration of the lunar surface as described in the Apollo program will, in effect, require a lunar base. (See Figure 2-1). If the assumption is made that the lunar activities will be expanded into a large base operation, it is forseen that special equipment will be required by personnel on the surface of the moon for protection and support.

In order that our lunar explorers accomplish their tasks efficiently, they must be provided with some type of shelter to house themselves, and facilities for their equipment and supplies. The shelter must provide adequate space to be compatible with minimum human requirements. Also, ideally, a means of survival should exist to provide for the possibility of the loss of the return capability of the spacecraft.

If our astronauts are to explore, survey, and gather geological samples and other scientific data required by the mission, a means of transportation must be provided for traversing the lunar surface.

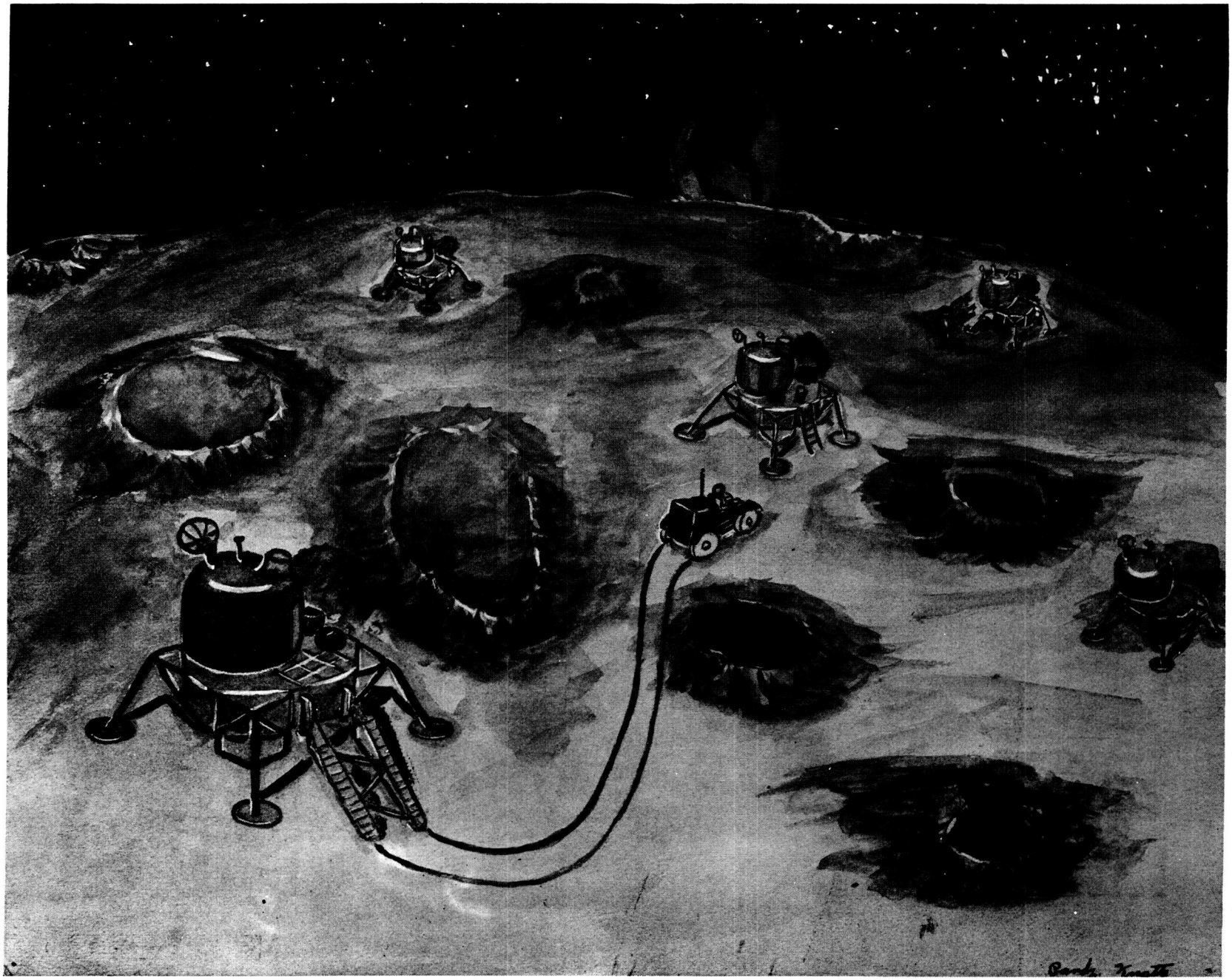

FIGURE 2-1. LUNAR BASE

3.0 ASSUMPTIONS AND GUIDELINES

3.1 MISSION

a) The launch vehicle will be the three-stage Saturn V.

b) The LEM and CM/SM will be capable of sufficient staytimes on the lunar surface or in the lunar orbit to support the 14-day mission of the SHELAB.

c) The phasing conditions for the operational portion of the mission will be 7 days lunar night, and 7 days lunar day.

3.2 PAYLOAD

a) A two-man shelter laboratory (SHELAB) and a small lunar traversing vehicle (LTV) will constitute a combined payload to be transported to the lunar surface by a single Saturn V.

b) The combined payload will be stored on the moon for a period of up to 180 days and will have a mission duration of 14 days.

c) Weight distribution guidelines to be compatible with the Apollo LEM-Truck are as follows:

LTV SHELAB Unloader	2950 kg.	6500 lbm.

d) The SHELAB and LTV will be designed for 95 percentile astronauts.

e) Structures, equipment, and instruments of both the SHELAB and the LTV must be capable of withstanding the Apollo launch, transit, docking, LEM-Truck landing loads, shock, and vibrations.

f) Standardization of subsystems and components which are common to the other Apollo systems will be applied.

g) The SHELAB/LTV will be designed to fit in the existing payload envelope.

3.3 LTV

a) The LTV shall be designed to accommodate a single astronaut.

b) The LTV will be automated and can be unloaded from the LEM/T by control from the earth station, the lunar surface, or a lunar excursion module.

c) The LTV will have a minimum range of 8 km (5 miles).

d) The traversing vehicle will be designed for space suit operations.

e) A spare backpack will be included in the life support crew equipment.

f) The LTV shall have remote as well as manned control capability.

3.4 SHELAB

a) The two-man shelter (SHELAB) will remain on the lunar excursion module-truck (LEM/T).

b) A two-man airlock will be provided for egress and ingress operations.

c) The shelter shall provide an O_2 atmosphere at 5 psia shirt-sleeve operations for life support environment.

d) Two spare spacesuits and a backpack will be included in the life support equipment.

4.0 ENVIRONMENT CONSIDERATIONS

The different environments to which the SHELAB/LTV and the astronauts will be exposed on the lunar surface present design problems which will require special attention.

The different environments that affect all systems, subsystems, and components are:

a) Acceleration

b) Vibration

c) Shock

d) Temperature

e) Vacuum

f) Earth's Temperature

g) Energetic Charged Particles

h) Magnetic Fields

i) Electromagnetic Radiation

j) Dust Particles

k) Meteors or Micrometeors

l) Lunar Surface

4.1 RADIATION

The following information is taken from Annex "D" Report R-AERO-S, "Radiation Shielding". The SHELAB/LTV radiation shield will be designed with the following tolerance dosage:

250 Rads to skin of whole body (Astronaut) (while on surface)

100 Rads for blood-forming organs

50 Rads to eyes

500 Rads for overall mission

Based on a single solar flare event having a time-integrated energy spectrum (NASA Apollo model):

$$N\ (>P) = N_o\ E^{\frac{-P}{P_o}}\ \left(\frac{\text{Protons}}{\text{cm}^2}\right)$$

P = rigidity in volts (joules/coulomb)

P = 8×10^7 volts

N_o = 4.54×10^{10} protons/cm^2

Based on the relationship of tissue depth and aluminum thickness:

$$T_{A4} = 1.313^T \text{ (Tissue)} \quad (\text{gm/cm})^2$$

Wall composition for 500 Rads is 1.0 $\frac{gm}{cm^2}$ Aluminum, and for 250 Rads is 2.0 $\frac{gm}{cm^2}$ Aluminum.

It is anticipated that the equipment installed inside the cabin wall will serve as a partial shield; therefore, a lesser amount of shielding will be required for the cabin walls. However, the upper dome portion of the cabin will require shielding, as no equipment lines these walls unless a radiator is placed above the cabin.

4.2 METEOROIDS

For this study we will use a 99% probability of no penetration with a confidence level of 80%, taken from the Meteoroid Penetration Criteria of MEMO R-AERO-Y-26-64.

$$\text{Log } p = (1/3)\left[\log (At - \text{Loglog } (1/R) - \text{Log } (PtHt)\right] - 3.82 \pm 0.680$$

$\therefore$ For R = 0.99 and confidence level of 80% ($\pm 0.68 \rightarrow +0.849$)

$$\text{Log } p = 1/3\left[\log (At) - \text{Log } (\rho tHt)\right] + 0.788 - 3.82 + 0.849$$

$$= 1/3\left[\text{Log } (At) - \log (\rho tHt)\right] - 2.183$$

Where A = effective exposed area (M^2)

t = time (seconds)

Pt = plate density (g/cc)

Ht = wall hardness in Brinell units

(See Figures 4-1 and 4-2)

4.3 LUNAR SURFACE

Previously compiled data in the KSC Annex "A" and "G" Engineering Model Surface (ELMS), gives us the slope of the Maria profiles and the frequency of occurrence, shown in Figure 4-3).

Thickness of a Homogeneous Wall of Aluminum 2219 T 87

With a No Puncture Probability of 0.99 for the Primary Meteoroid Flux on the Moon

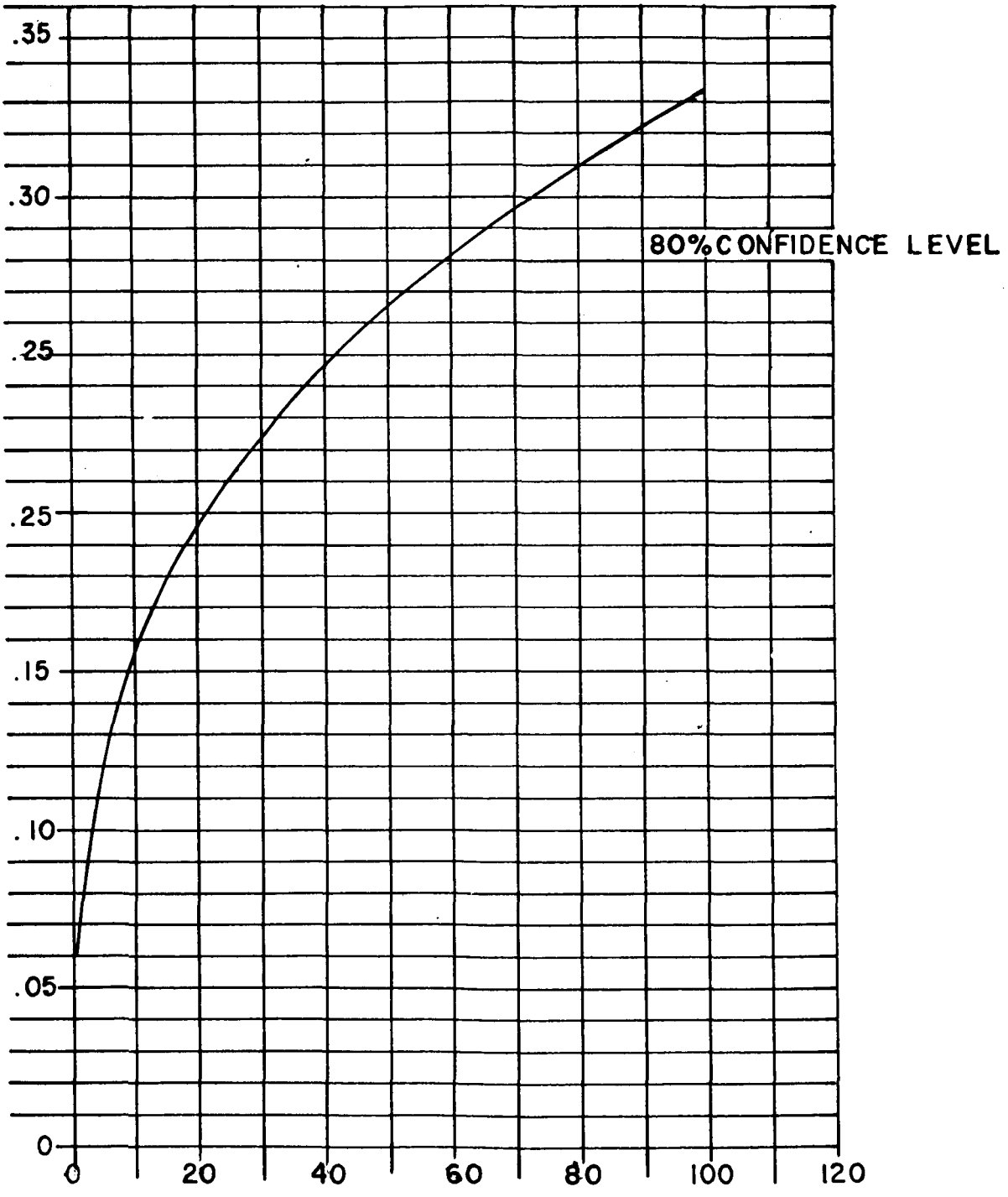

FIGURE 4-1 METEOROID SHIELDING

Thickness of a Homogeneous Wall of Aluminum 2219 T 87

With a No Puncture Probability of 0.99 for the Primary Meteoroid Flux on the Moon

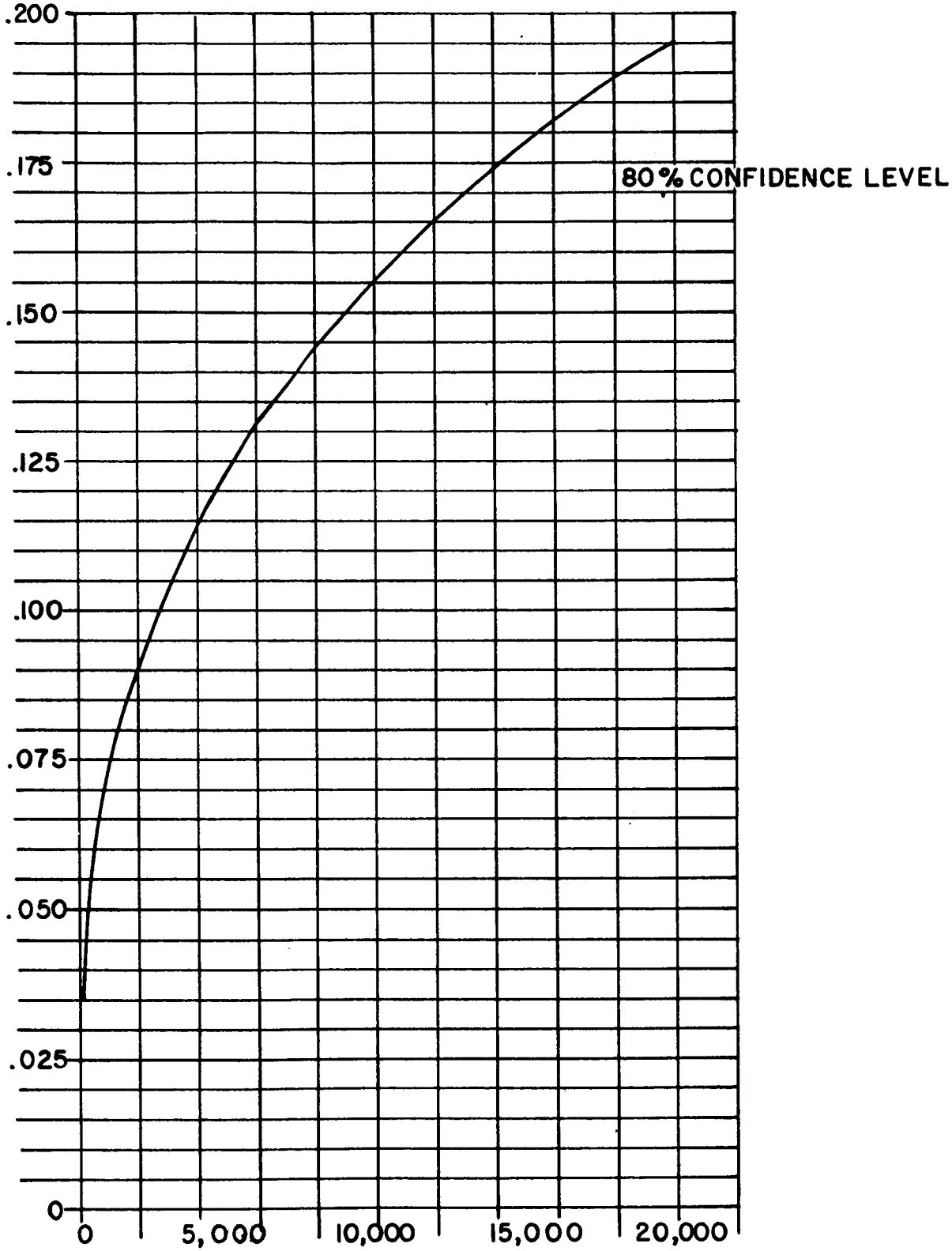

FIGURE 4-2 METEOROID SHIELDING

FIGURE 4-3 SLOPE DATA	
Per Cent	Slope
24.5	1.5 to 2.5
22.5	.5 to 1.5
16.0	2.5 to 3.5
11.0	-.5 to +.5
10.0	3 1/2 to 4 1/2
7.5	4 1/2 to 5 1/2
TOTAL 91%	Slope - .5 to 5 1/2

The chart shows that a traversing vehicle should be designed to negotiate slopes from 0.5 to 5 1/2 degrees, which comprise about 91% of the Maria lunar surface profile.

For this study, we will use Annex "A", Soil Properties, showing minimum soil strength, and we will consider Annex "G", indicating the least desirable soil conditions.

ϕ = angle of friction deg

c = coefficient of soil cohesion psi

K_c = modulus of soil deformation to cohesion $lb/(in)^{n+1}$

$K\phi$ = modulus of soil deformation to friction

n = stratification factor of soil

K_1 = reflects degree of compactness

K_2 = determining fundamental characteristics of shear curve

K_1 and K_2 are also slippage factors

Sym.	ANNEX "A"	ANNEX "G"
ϕ	32	20
c	0	0
K_c	0	0
$K\phi$	0.5	0.05
n	0.5	1.0
K_1	0.2	0.2
K_2	1.25	1.25

5.0 MISSION DESCRIPTION

5.1 GENERAL

The NASA-Apollo project objective of landing on the moon and returning to earth is scheduled to be accomplished within the time frame of 1968 to 1970. This mission, which could support early Apollo missions, would utilize the three-stage Saturn V launch vehicle for earth launch and escape.

After earth escape, midcourse maneuvers will be performed by the astronauts to place the spacecraft in a lunar orbit, where the lunar excursion module-truck (LEM/T) will separate from the command and service module and proceed to the moon's surface. During the LEM/T descent, the ALSS module will be guided to the selected landing site. Figure 5-1 shows a potential landing site.

The ALSS module consists of the combined payload of a shelter laboratory (SHELAB) and a lunar traversing vehicle (LTV), which will be used for the scientific mission exploration.

Astronauts can be landed by a LEM within 180 days of the ALSS module landing, after which the LTV can be remotely guided to the astronauts in the LEM with the assistance of the stereo television. The LEM astronauts with the LTV will then proceed to the shelter and explore the

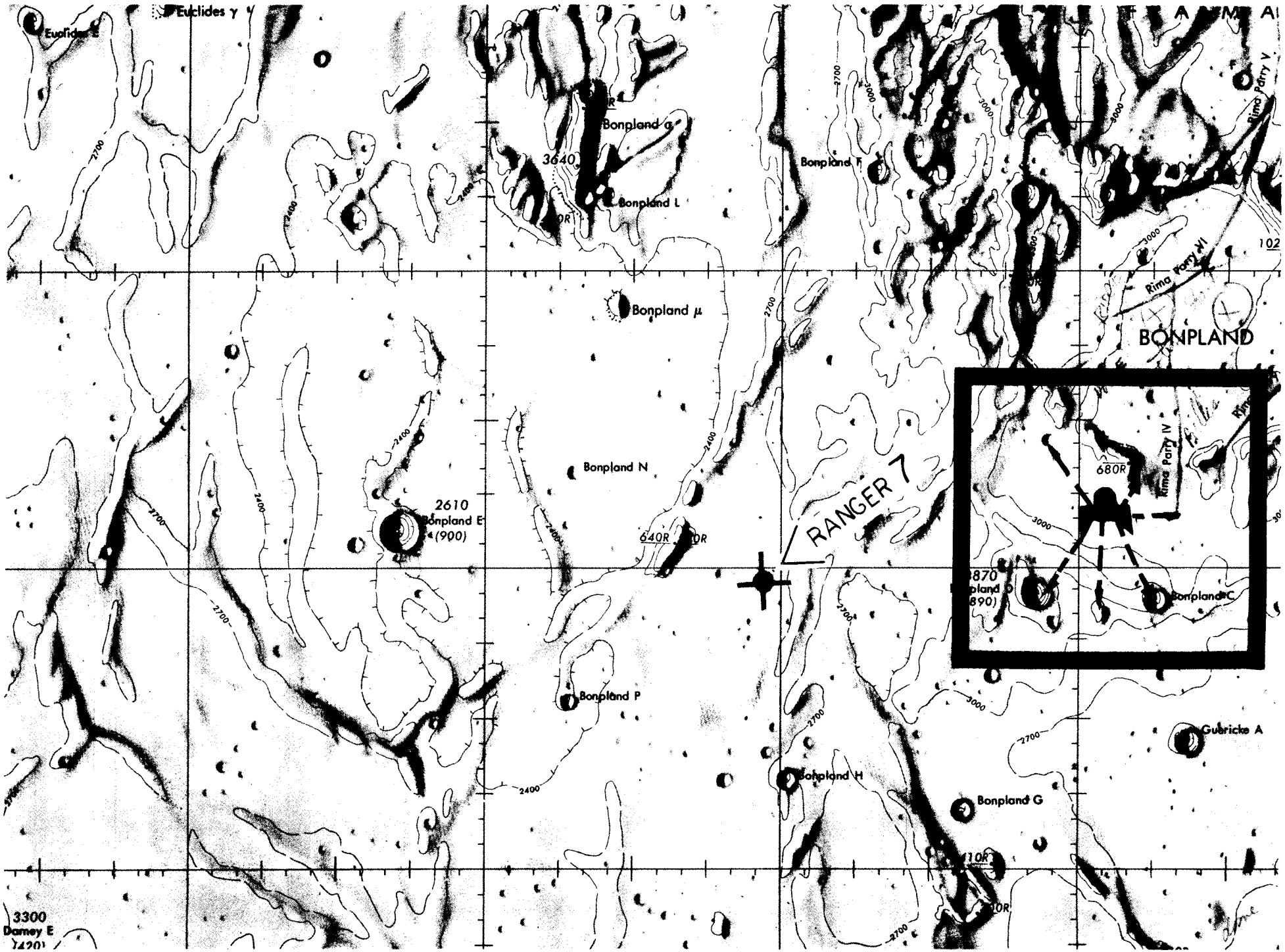

FIGURE 5-1. BONPLAND AND MARIA NUBIUM REGION

lunar surface and perform the scientific investigation as planned within the duration of 14 days.

After completion of the survey, the astronauts will return to the LEM with their 36.24 kg (80 pounds) of speciments and return to the orbiting command and service module via the LEM ascent stage. After accomplishing LEM docking, the astronauts, with the specimens and samples, will board the command module, return to the earth's orbit, and land.

5.2 SCIENTIFIC MISSION REQUIREMENTS

No detailed traverse will be planned for the present, as the mission will consist of numerous small loops. The instruments to be taken on each loop will be determined by the astronauts on the basis of what has been the most beneficial and what will supply the most useful data concerning the surface conditions to be encountered. The following lists of instruments might be considered representative for the preliminary design study.

5.2.1 STATIONARY INSTRUMENTS

Based on the above mission, the following instruments might be required for the SHELAB. Some of the instruments will be fixed; the others will be deployed on the cabin or deck area. The instruments include:

a) Acoustic Meteoroid Panel*

b) Lunar Exposure Panel*

c) Dosimeter*

d) γ -Ray Detector*

e) Tidal Gravimeter

f) Quake Seismometer

g) Star Tracker

h) Meteoroid Spectrometer

i) Solar Plasma Spectrometer

j) Magnetometer

k) Charged Particle Spectrometer

l) Neutron Phoswich Detector

m) Atmosphere Mass Spectrometer

n) Total Gas Pressure Gauge

o) Charged Dust Detector

p) Electric Field Meter

q) Lyman α Spectrometer

r) Permanent Thermal Probe

s) Radio-Isotope Power Supply

5.2.2 PORTABLE INSTRUMENTS

Instruments for the LTV will be stored on the deck area, with the exception of the drill, which will be incorporated in the LTV design. Portable instruments for the LTV include:

* Instruments (a) through (d) will be operated prior to the astronauts' arrival.

a) Cameras

b) Theodolite

c) Gravimeter

d) Sample Containers

e) Geophones

f) Magnetometer

g) Spectrophotometers

h) Mass Spectrometer

i) α -Particle Mass Spectrometer

j) Subsurface Probe

k) Acoustic Velocity Probe

l) Total Gas Pressure Gague

m) Charged Dust Detector

n) Electric Field Meter

o) Gas Chromatograph

p) γ -Ray Spectrometer

q) Drill (Permanently Fixed to LTV)

r) Portable TV Camera (Regular LTV Camera, Detachable)

5.2.3 CABIN INSTRUMENTS

The instruments that will remain inside the LTV cabin and support the LTV instrumentation include:

a) Siesmic Amplifier

b) X-ray Diffractometer

5.2.4. MISSION TRIP PARAMETERS

A total weight of 81.54 kg (180 lbs) has been allotted for instruments to be taken by the LTV for each mission trip. A total of twenty-eight (two four-hour trips per day) trips are possible in this mission. See Figures 6-3, 7-2, and 5-2 for scientific instrument deployment and installation.

5.2.5 LUNAR DRILLING

The drilling equipment is one of the vital scientific instruments required to accomplish the many phases of the scientific plan. The lunar drill will be used to obtain core samples and soil mechanics measurements, and to perform active seismic shots for sub-surface measurements. (See Figure 5-2)

The lunar drill intended for this mission will have a drilling depth capacity of 3.04 m (10 ft) and will be incorporated in the design of the LTV. It will be a telescopic type with extendable rods supporting a drill bit at the end. The drill as visualized would be similar to the present state-of-the-art standard coring rig which is used for obtaining core samples. It will be located in the area of the vehicle center-of-gravity in order to acquire maximum thrust through the use of the vehicle mass.

Since the drill depth is limited to 3.04 m (10 ft), the seismic shot will not be included in the planned mission.

5.2.6 OPERATIONAL COMMENT

During the operational mode of lunar drilling, trays are provided for the core samples, and a compartment is provided for the tools required in the drilling operation, see Figure 5-2.

A scientific stowage compartment is provided, in which to keep all the required scientific instruments safely strapped. The lid may be transformed into a table for general purposes, such as mapping, data recording, etc.

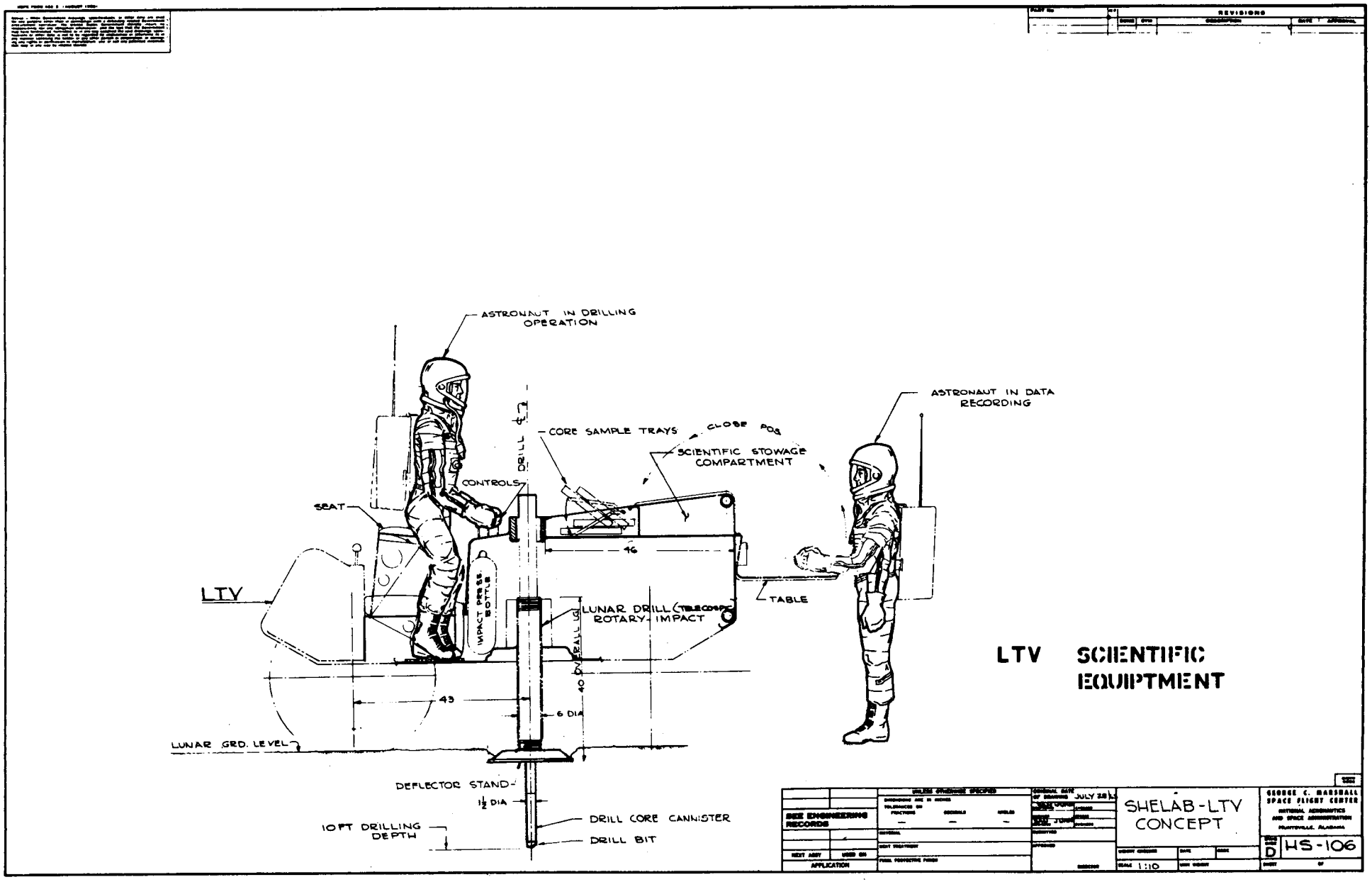

FIGURE 5-2 LTV SCIENTIFIC EQUIPMENT

6.0 SHELAB DESIGN

6.1 GENERAL

If the lunar astronauts are to accomplish their mission in an efficient manner, it is desirable to provide laboratory facilities for experimentation, and shelters for housing and supply storage. The shelter must provide protection from lunar environmental hazards, and at the same time must provide life support in case of an emergency.

The shelter will be accommodated on the lunar excursion module-truck (LEM/T), which will be soft-landed at the selected landing site. Landing shock attenuation will be provided by the four fold-out footings (shock-absorbing landing legs).

Most of the scientific equipment required for use on the lunar surface will be stored outside of the living space on the LEM/T deck. The equipment necessary to sustain two astronauts for a 14-day mission duration should consist of:

a) Life Support

b) Instrumental Control Equipment

c) Electrical Power Supply

d) Communication Equipment

e) Guidance and Navigation Equipment

f) Equipment for Personnel Comfort, Safety, and Hygiene

6.2 SHELTER DESIGN APPROACHES

Figures 6-1, 6-2, and 6-3 show the proposed SHELAB/LTV concept and supporting equipment on the LEM/T. The design configuration of the shelter is influenced significantly by the following factors:

a) Payload Envelope

b) LTV Volume and Location

c) Method of Unloading the LTV

d) Orientation of the Unloading Device with Reference to the LEM/T Landing Gear Legs

e) Cabin Design Pressure

f) Volume of Equipment and Crew Requirements

g) Docking Adapter Support

h) Airlock Location

The shape of the two-man shelter must comply with the dimensional constraints of the payload envelope. The SHELAB/LTV payload envelope is in the form of a frustrum of cone, as shown in Figures 6-4, and 6-5. Dimensions include:

Minimum Diameter	475.28 cm	187.12 in.
Maximum Diameter	568.60 cm	223.86 in.
Height	295.91 cm	116.50 in.
Overall Clearance	7.62 cm	3.00 in.
Total Volume	63.4 m^3	2239.00 cu. ft.

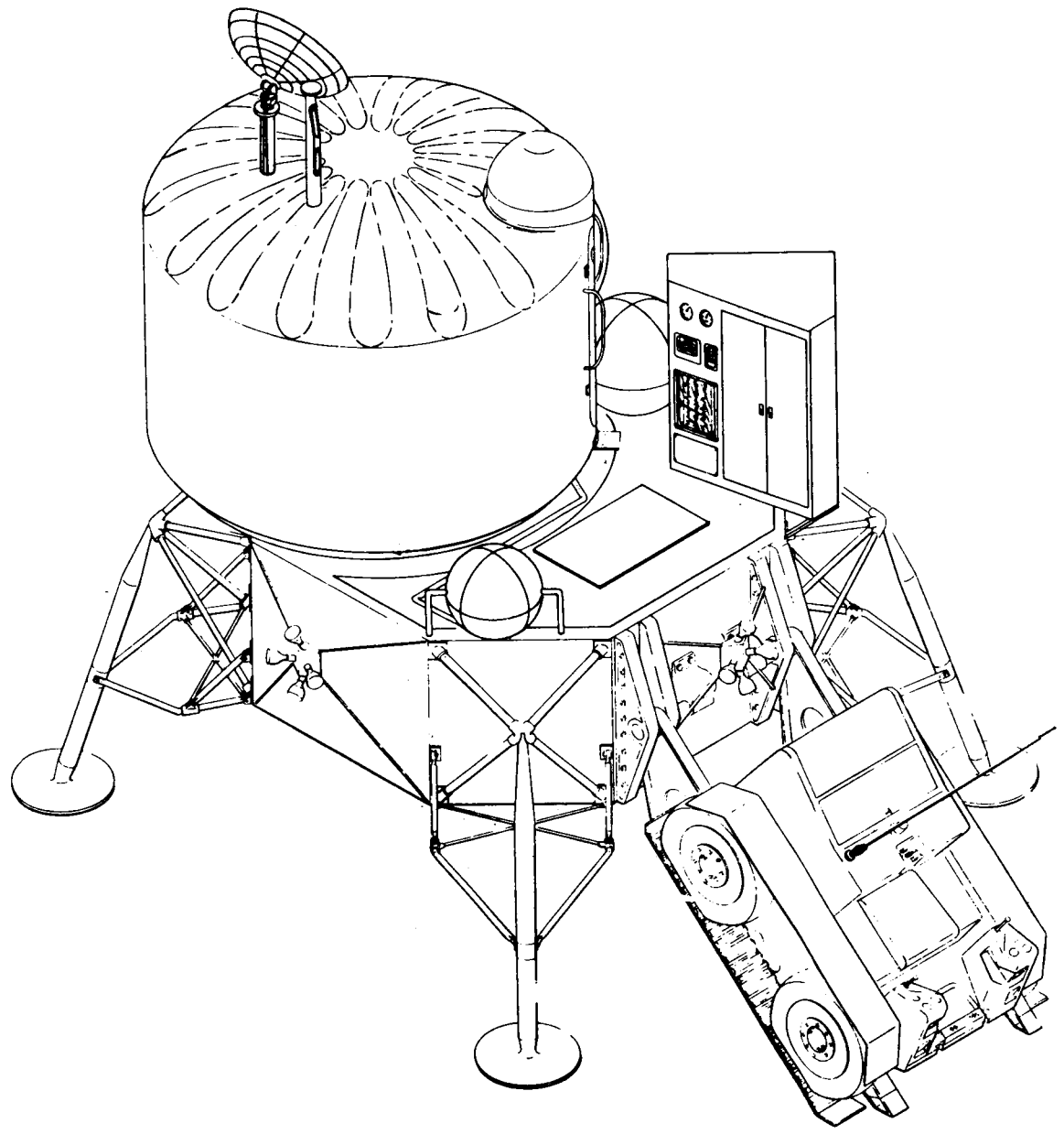

PROPOSED LUNAR SHELAB - LTV

PREPARED BY
HAYES INTERNATIONAL
HUNTSVILLE, ALABAMA

LIST OF MATERIAL

SHELAB - LTV
CONCEPT

GEORGE C. MARSHALL
SPACE FLIGHT CENTER

J HS-101

FIGURE 6-1 SHELAB/LTV CONCEPT

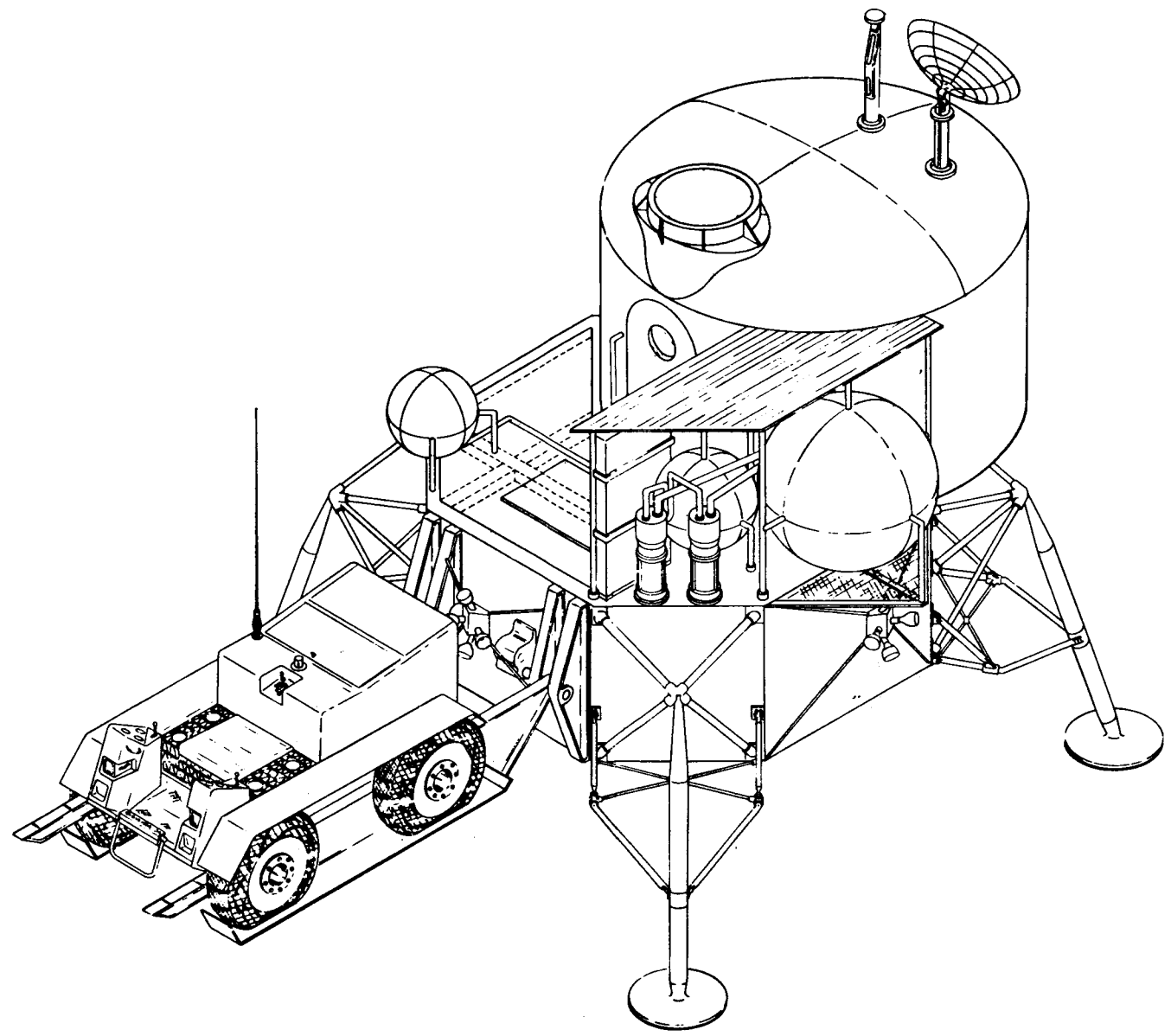

PROPOSED LUNAR SHELAB / LTV

SHELAB-LTV CONCEPT

GEORGE C. MARSHALL SPACE FLIGHT CENTER

HS-102

FIGURE 6-2 SHELAB/LTV CONCEPT

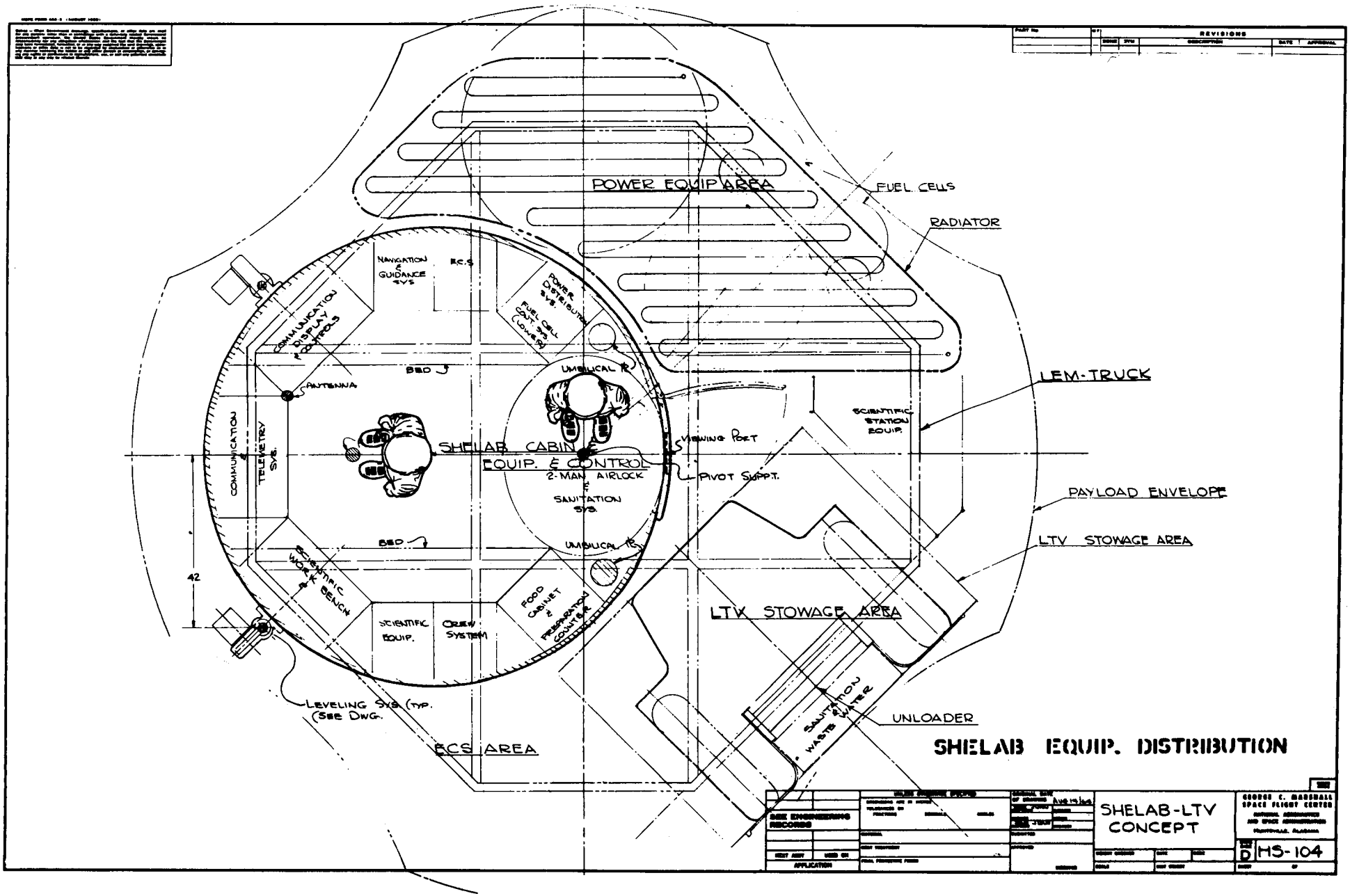

FIGURE 6-3 SHELAB EQUIPMENT DISTRIBUTION

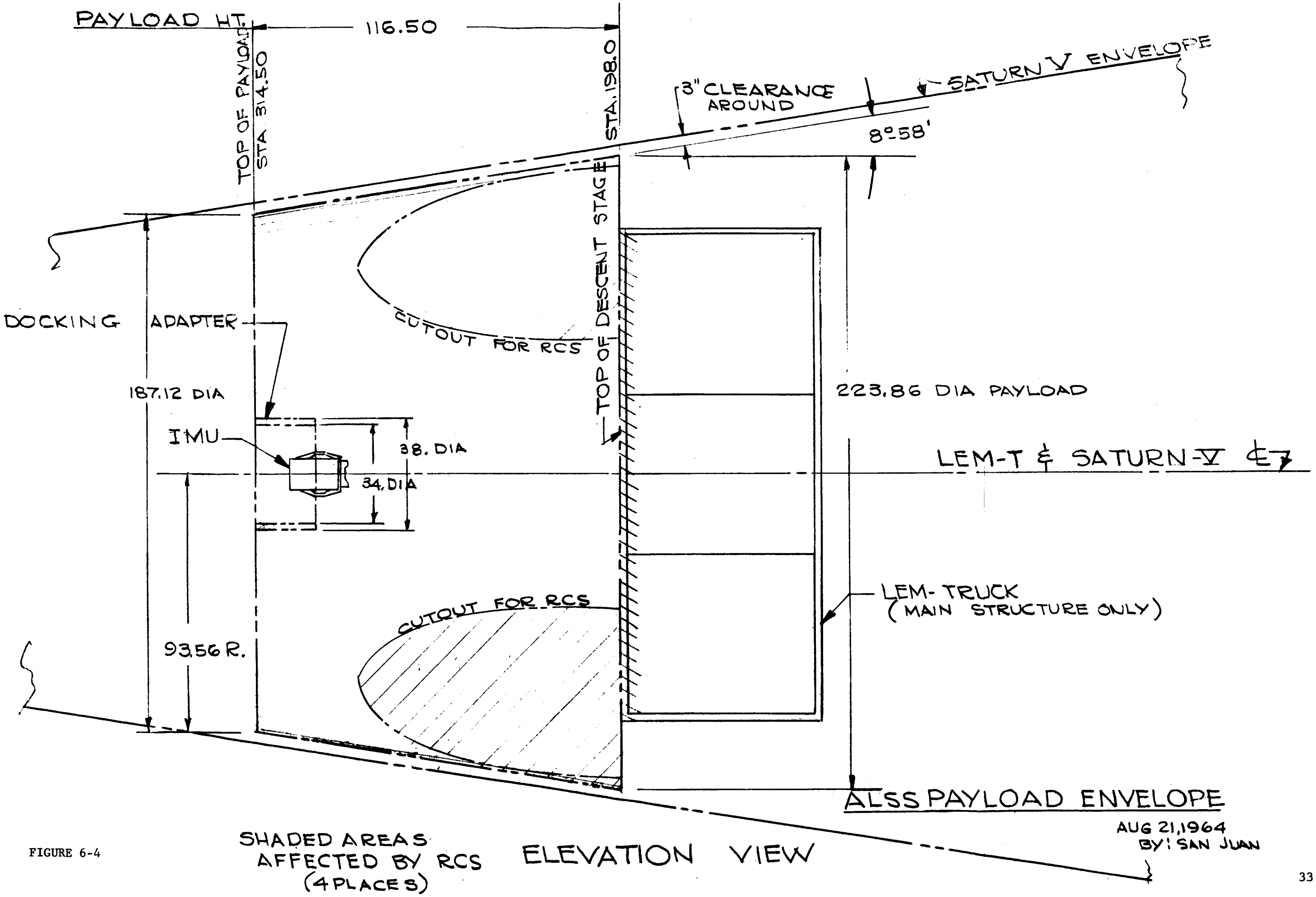

FIGURE 6-4

SHADED AREAS AFFECTED BY RCS (4 PLACES)

ELEVATION VIEW

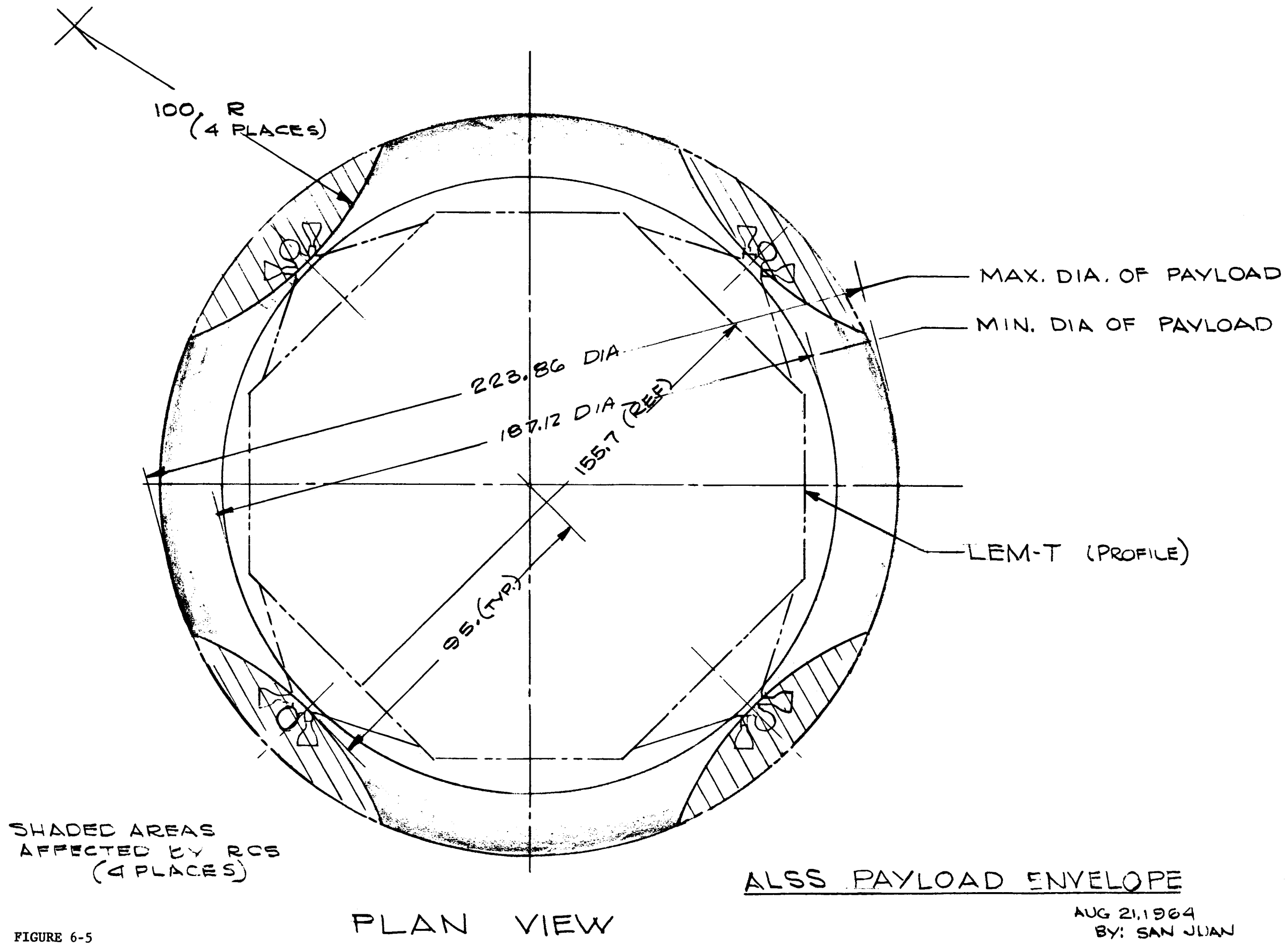
100 R
(4 PLACES)
MAX. DIA. OF PAYLOAD
MIN. DIA OF PAYLOAD
223.86 DIA
187.12 DIA
155.7 (REF)
95. (TYP.)
LEM-T (PROFILE)
SHADED AREAS
AFFECTED BY RCS
(4 PLACES)
ALSS PAYLOAD ENVELOPE
PLAN VIEW
AUG 21, 1964
BY: SAN JUAN

FIGURE 6-5

6.2.1 CABIN SIZE

The diameter of the cabin will be governed by the free volume required for two men to perform mission duties during a 14-day period. Requirements include provision for a two-man airlock.

Figure 6-6 illustrates the suitability of using a 289.56 cm (114 in) diameter cabin, obtaining the maximum usable volume while maintaining compatibility with the LEM-Truck docking adapter location. The philosophy dictates offsetting the position of the shelter with reference to the LEM/T configuration. This is structurally sound in terms of supporting the landing loads and the loads transmitted by the docking adapter.

6.2.2 CABIN SHAPE

Two cabin configurations have been considered, as shown in Figures 6-7 and 6-8 (vertical cylinder) and Figure 6-9 (semi tear-drop vertical cylinder).

The vertical cylinder was selected for this study because of its ability to withstand or transfer vertical shock loads as well as pressure loads. Another major reason for its selection is the fact that it has less weight versus volume than the flat-floor or horizontal cylinder concept.

The cabin has a total internal volume of 362 ft^3, which will satisfy actual manned volume requirements for a two-man, 14-day mission duration period. The internal volume including airlock is 424 ft^3. The gross cabin volume, external walls, is 447 ft^3.

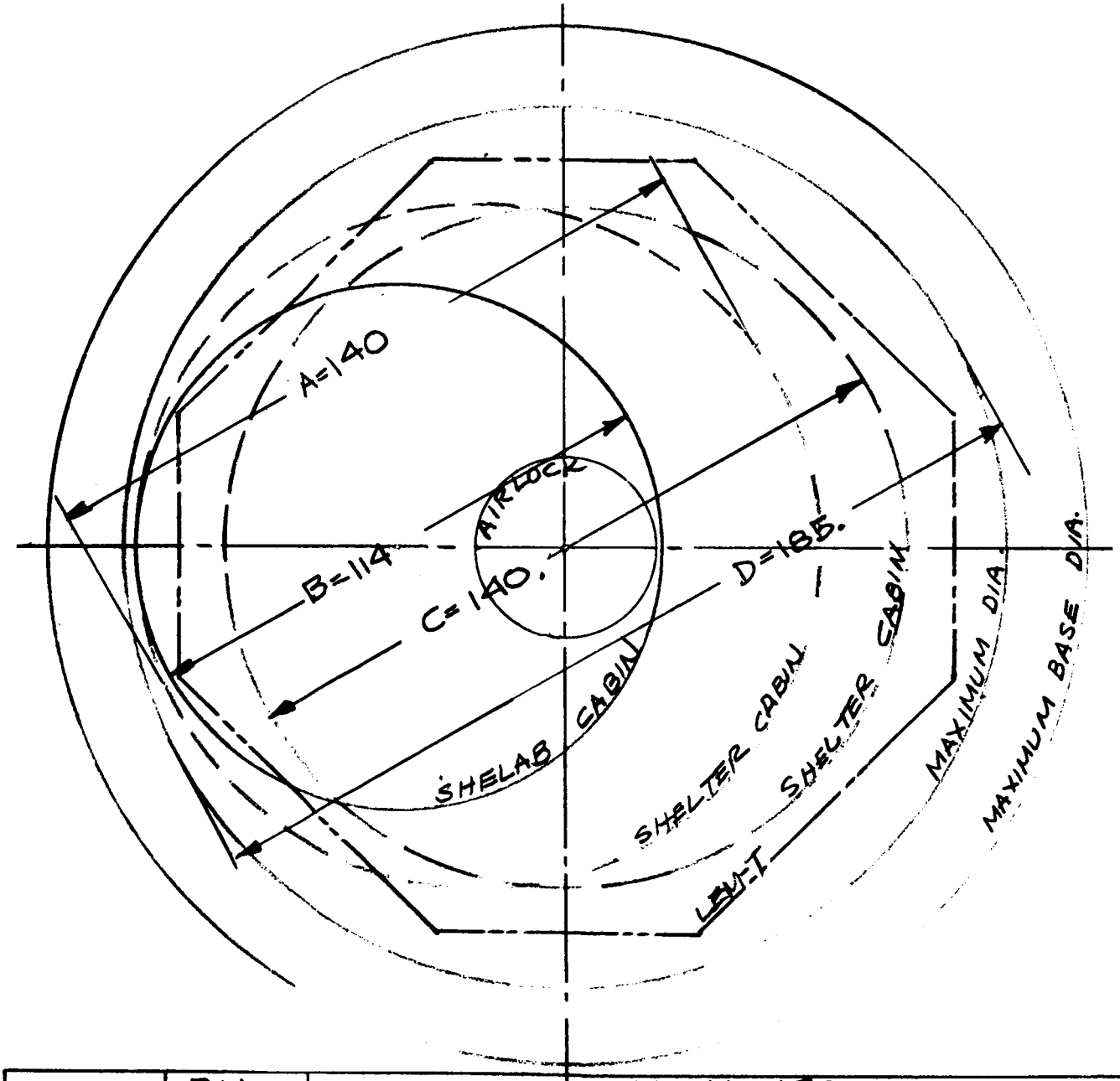

	DIA	COMMENTS
A	140	OFFSET-WITH AIRLOCK UNDER DOCKING ADAPTER
B	114	do - do
C	140	CONCENTRIC - SEPERATE AIRLOCK FROM ADAPTER
D	185	do - do

CABIN DIAMETERS

FIGURE 6-6

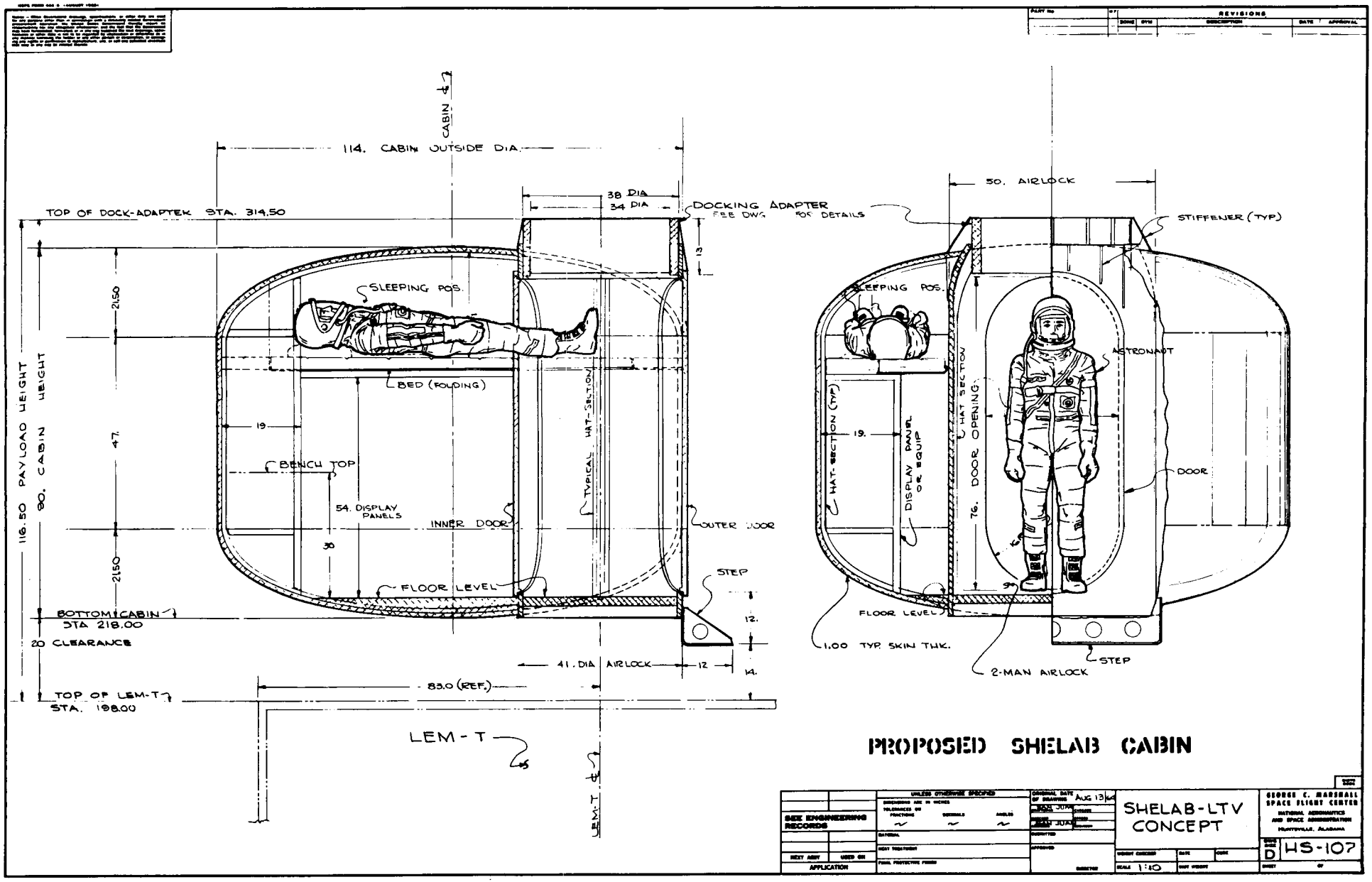

FIGURE 6-7 PROPOSED SHELAB CABIN

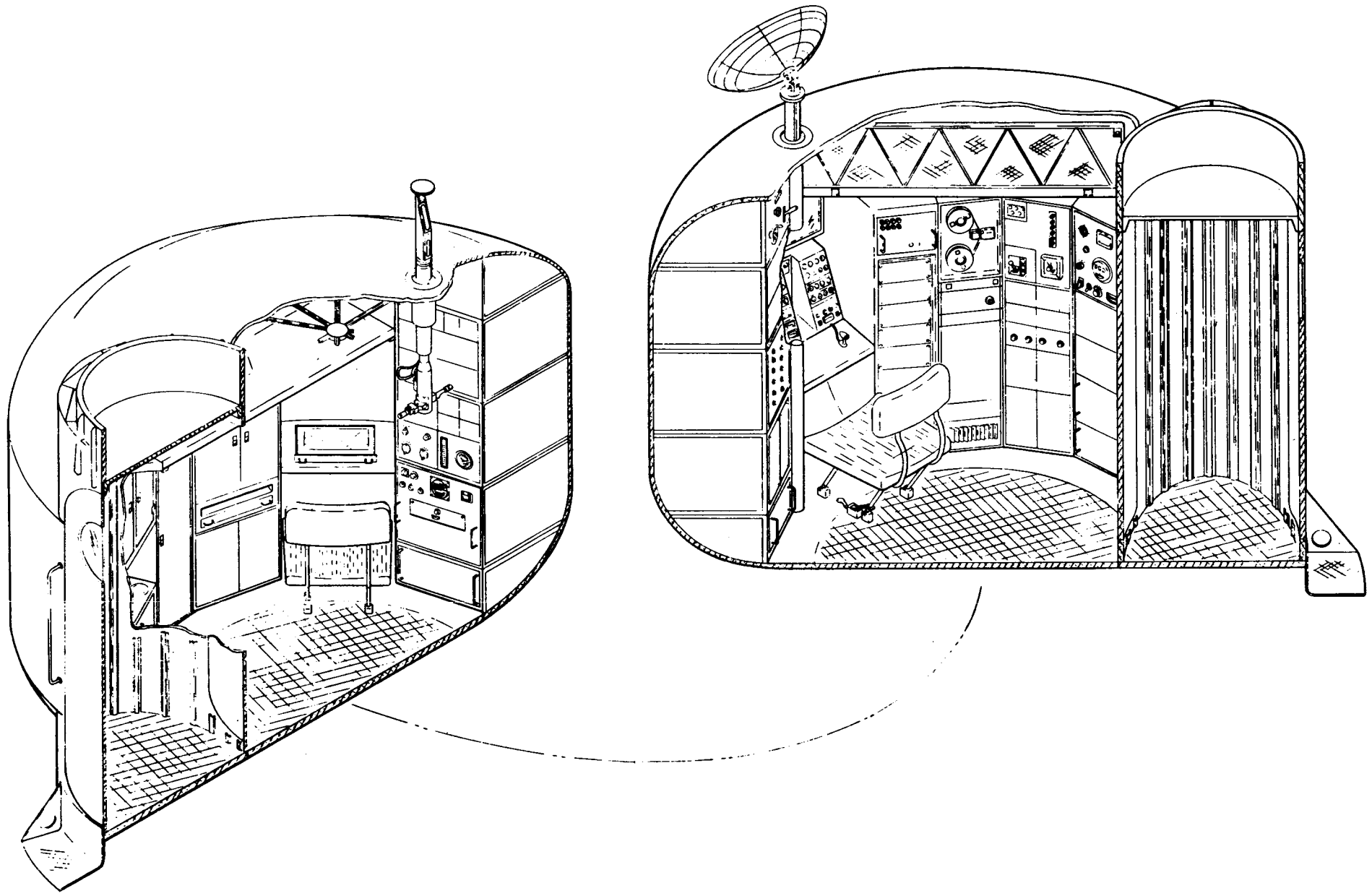

PROPOSED SHELAB EQUIP. DISTRIBUTION

SHELAB-LTV CONCEPT

HS-103

FIGURE 6-8 PROPOSED SHELAB EQUIPMENT DISTRIBUTION

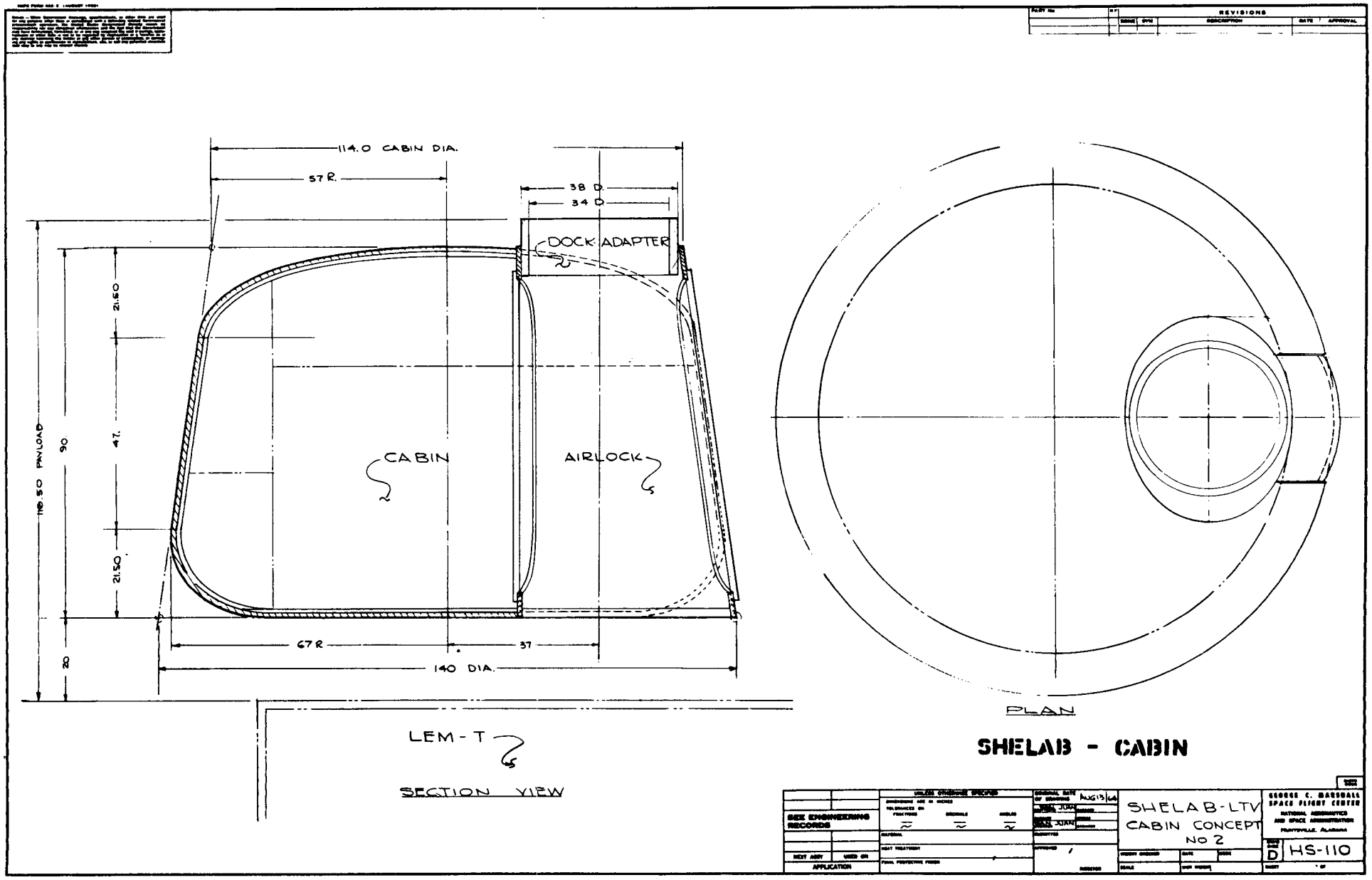

FIGURE 6-9 SHELAB CABIN

A sub-floor made of honey-comb material will be used for the working area, to provide a level surface over the ellipsoidal-dome contour of the floor. Work benches will be 76.20 cm (30 in) from the floor level, and display panel height will be 137.16 cm (54 in) with the exception of the panels between the two work benches opposite the airlock.

A standard dimension of 48.26 cm (19 in) from the wall to the equipment face will be the limiting dimension for all equipment to be designed or installed inside the cabin. For the dimensions of the equipment storage area, see Figure 6-3. The limitations set here will assist in the future preliminary design of different cabin equipment and storage compartments.

6.2.3 CABIN WALL

The cabin wall will be a composite structure consisting of polyurethane foam and super insulation sandwiched by two aluminum skins (outer bumper and inner skin). The inner skin is the pressure vessel and the outer bumper is the meteoroid shield, as shown in Figure 6-10. Considerable rigidity will be offered by the framwork supporting the internal equipment. Cross section number 2 will be used for this study.

6.2.4 AIRLOCK

The airlock chamber, an integral part of the cabin, is used as a decompression chamber for cabin ingress-egress. Also it is used as an emergency compartment in case of life support system or structural failure in the cabin or as protection from intense solar radiation.

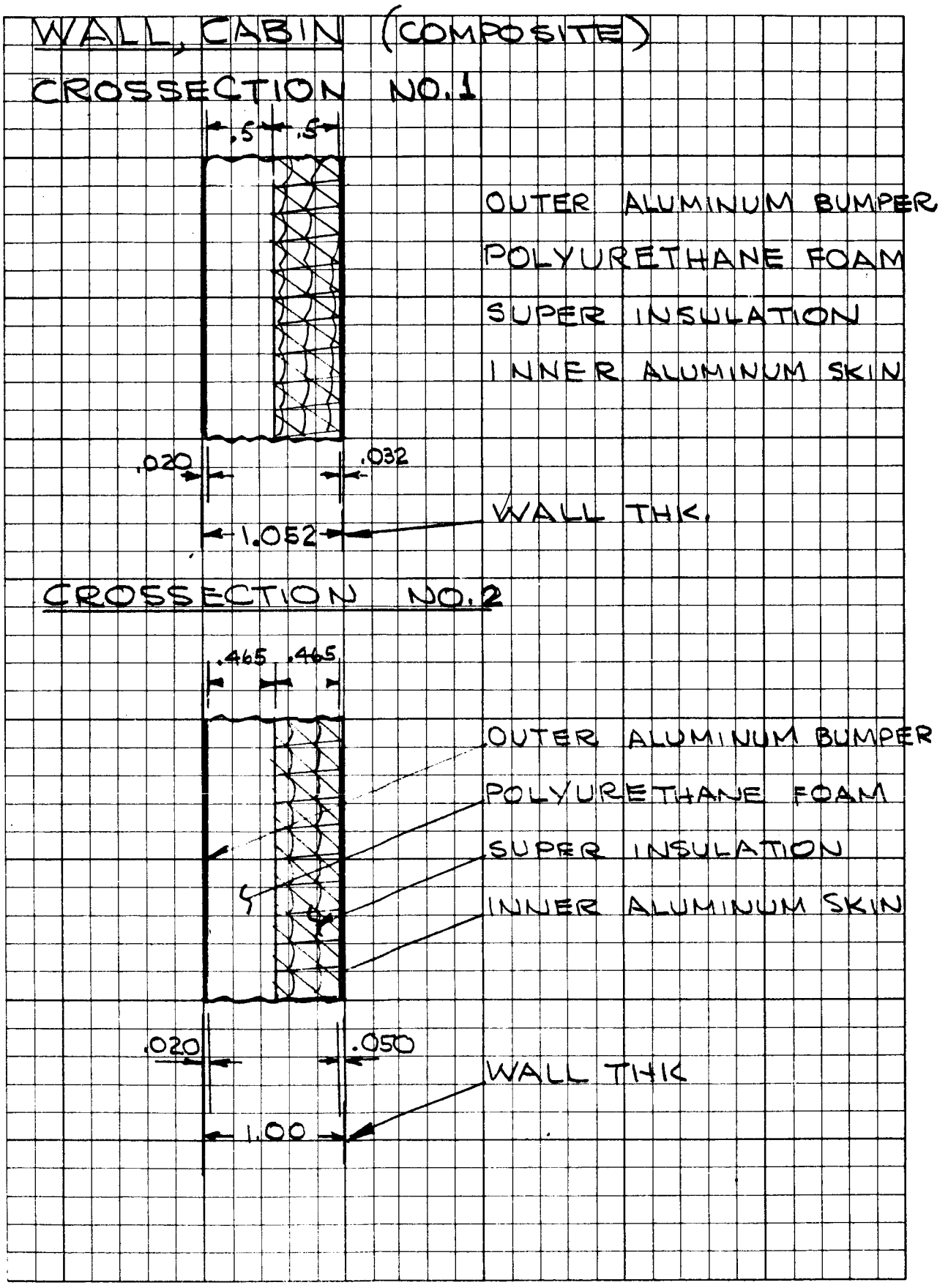

FIGURE 6-10 CABIN WALL CROSS SECTION

The airlock is designed to support a docking adapter ring, as shown in Figures 6-8, 6-3, and 6-7. The airlock is an ellipsoidal pressure cylinder, with a volume of 2.4 m^3 (85 ft^3), a flat floor with an area of 1.11 m^2 (12 ft^2), and a flat, removable roof. The sub-floor will be made out of honeycomb material. The wall thickness is designed to withstand the loads transmitted by the docking adapter and the landing load transmitted by the LEM/T deck through the azimuth leveler supports, to provide shielding from meteoroids and radiation, and to withstand the internal pressure imposed. Hat-section reinforcement will be used inside the shelter to add rigidity to the structure.

It is anticipated that the airlock will be used for an ingress-egress two times per day. This means a loss of approximately 29.45 kg (65 lbs) of O_2 from the airlock chamber if pumpdowns were not provided. Two doors, designed with the proper seal and positive locking mechanisms, are provided for ingress-egress. The doors may be opened one at a time, an action accomplished by limit-switches mounted on the door locks. The door seals used will be designed to have the minimum leak rate.

Provisions for a pumping system and a method of control will be provided. A vacuum pump unit will be installed outside of the airlock chamber with a capacity of 30 CFM, including a one-hp drive motor.

A removable plate, located at the upper part of the airlock, is bolted to the docking adapter. This plate is removable and can be replaced, at the discretion of the astronaut, by a bubble-hatch which serves as a sealing unit.

6.2.5 BUBBLE

A bubble is a combination of an escape hatch and an observation view port, as shown in Figure 6-2.

Provisions for positive sealing and locking mechanisms will be provided for the bubble. It will be supported by a four-bar linkage, which will allow it to be stored at the side of the cabin during the duration of the flight.

The bubble will be fabricated of a transparent material and constructed similar to the viewing ports. Provisions will be made for placing a theodolite at the top of the bubble to allow for mapping, tracking, and determining the location of the landing site by the triangulation method.

6.2.6 AZIMUTH LEVELER

The azimuth leveler, Figure 6-11, is a sub-system designed to level the cabin in the event that the LEM/T landing gear falls into a crevice or lands on a boulder. The effective slope shall not exceed 15° for the depressions and sinkages in the surface.

These conditions will be resolved by providing the shelter with a tri-point support, shown in Figure 6-11. The main support, which is a ball joint, falls directly in the ℄ of the LEM/T and docking adapter-airlock, and the two secondary supports are the levelers. The drive leveler units support the cabin at the joint of the cylindrical shell, and the lower ellipsoidal dome.

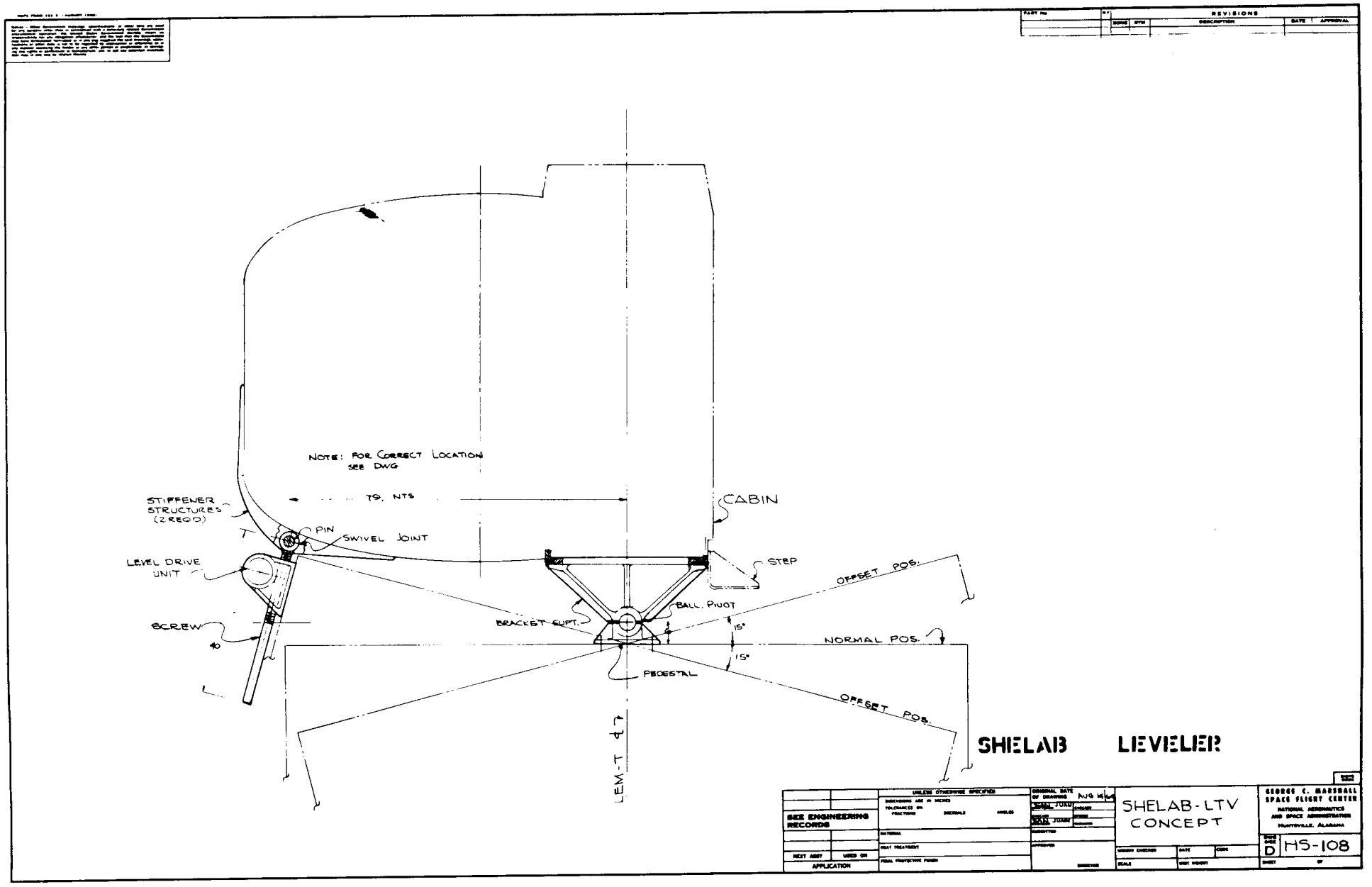

FIGURE 6-11 SHELAB LEVELER

The azimuth leveler tri-support is designed to absorb loading transmitted by the docking adapter, the weight of the cabin, and the acceleration forces created by the impact of landing.

The following leveler equipment is required:

a) Main Support

- Ball Joint
- Airlock Adapter
- Pedestal

b) Level Drive Assembly (2)

- Drive Motor
- Screw
- Gear
- Housing
- Swivel Eye
- Stiffener

It appears that the ideal azimuth leveler should be incorporated with the LEM-Truck landing gear.

Assuming that the LEM-Truck's landing gear legs are designed to have leveling capabilities, the following advantages will be derived:

a) Possibility of eliminating the azimuth leveler

b) Lower cabin floor level and center-of-gravity achieved

c) LEM/T structure utilized for flooring support

d) Lower weight achieved

e) Savings in weight can be used to increase the O_2 supply

f) Greater clearance provided at the roof area

g) Design integrity and reliability increased

Figures 6-12 and 6-13 show the comparison between a shelter with a leveler (shelter number 1) and a shelter without a leveler (number 2).

6.2.7 RADIATOR

The variation of lunar surface temperature from 115.5°C (240°F) at the sub-solar point to -168°C(-270°F) at night plus the sun orientation are some of the environmental factors that affect the design of the radiator. Other factors are operating temperature levels, heat loads, surface properties, and the insulation position of the radiator, all of which determine how much heat may be rejected per square foot of the radiator area.

The radiator will be installed on the deck of the LEM/T in a horizontal position. The radiator will be supported from the deck and elevated 1.824 m (6 ft), as shown in Figure 6-1. The main support will be attached to the main structure of the LEM/T.

To conserve weight and increase radiator area, an incorporation of the radiator tubes into the composite structure roof is proposed, as shown in Figure 6-2. This radiator area of 8.54 m^2 (92 ft^2) will allow the use of low temperature operating fuel cells.

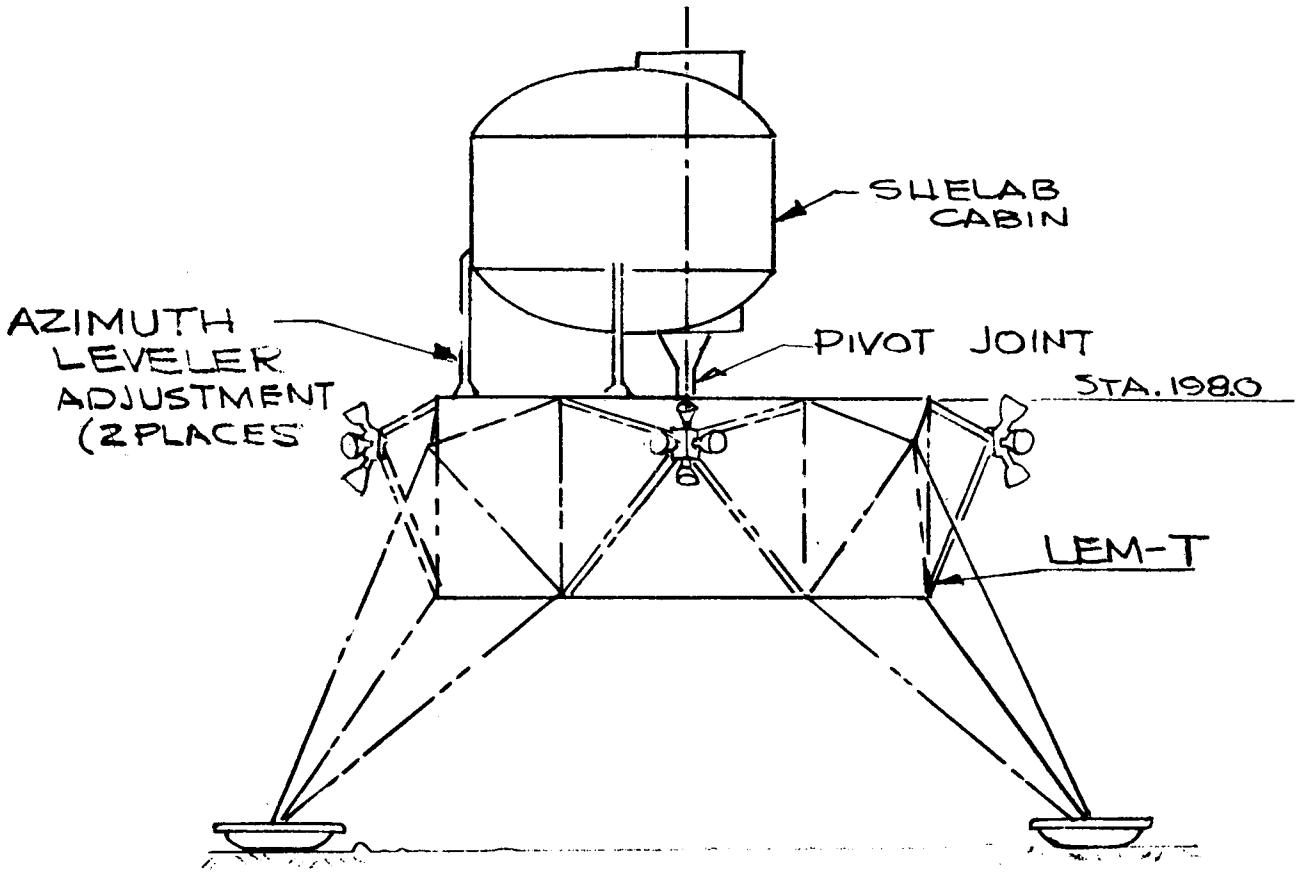

CABIN AZIMUTH LEVELER
SYSTEM No 1

FIGURE 6-12

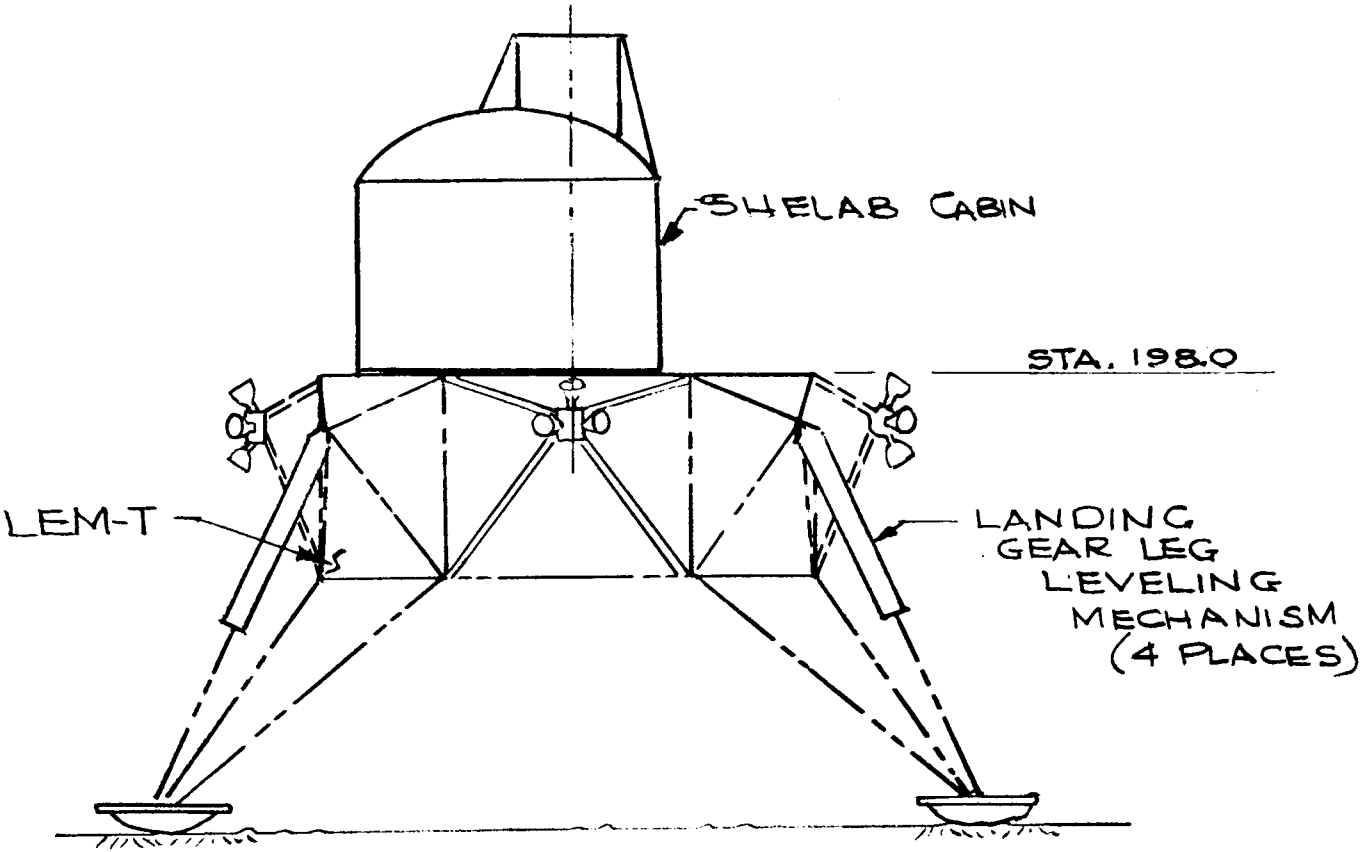

FIGURE 6-13

LEM-T AZIMUTH LEVELER SYSTEM No 2

A combination of the two radiator concepts will give a total available radiator area of 13.93 m^2 (150 ft^2).

6.3 LIFE SUPPORT CONSIDERATIONS

The primary objective of a life support system is to allow astronauts to perform and complete the scientific mission plan in the presence of a hositle lunar environment. This includes providing an artificial environment, nutritious food, water, oxygen, objects for personal hygiene and sanitation, and other necessary items for a 14-day duration period.

The normal operating pressure in the cabin will be regulated to 5 psia with a 100% oxygen atmosphere. In the emergency condition, the operating pressure might be decreased to 3.5 psia.

The cryogenic O_2 will be carried in a spherical tank located in the ECS area, as shown in Figure 6-3.

A near-constant cabin pressure control will be maintained during the mission. Reliable components such as regulators, gages, display panel controls, relief valves, and redundant supply systems will be provided to assure maximum reliability of the pressure control system.

Carbon dioxide will be removed by the process of absorption through LiOH filters. Filters should be changed when the partial pressure indicates 7.0 mm Hg. This will maintain a CO_2 partial pressure of 3.8 mm Hg normal and 7.6 mm Hg maximum.

The temperature of the cabin will be constantly controlled and will be maintained at 22°C (70°F) to 26.6°C (80°F). The humidity in the cabin atmosphere will be controlled to range from 40 to 70%. Metabolic heat will be 12000 BTU-man-hour maximum and 500 BTU-man-hour average.

Provisions for ventilation must be incorporated in the cabin design to assure the proper control of temperature throughout the area with the minimum power requirement.

6.4 SHELAB POWER CONSIDERATIONS

The electrical power system will provide all the necessary electrical power requirements for the SHELAB for the duration of the mission and will supply sustaining power for a period of 180 days, during storage time. The different power sources are:

a) The primary source will be a fuel cell system. This is a closed cycle system (Figure 6-14), using two cells of two kw each, at 28 VDC. These are used for communication, navigation, environmental control, and life support systems.

b) Batteries are the secondary power source, providing start-up energy for the fuel cells and supporting peak energy requirements. The type batteries being considered are silver zinc oxide (Zn/KOH/AgO), developed for high capacities of 80 watt-hr/lb. These batteries have the capability of supplying the secondary power required. They will be installed outside the cabin, near the fuel cells, and will have provisions for recharging.

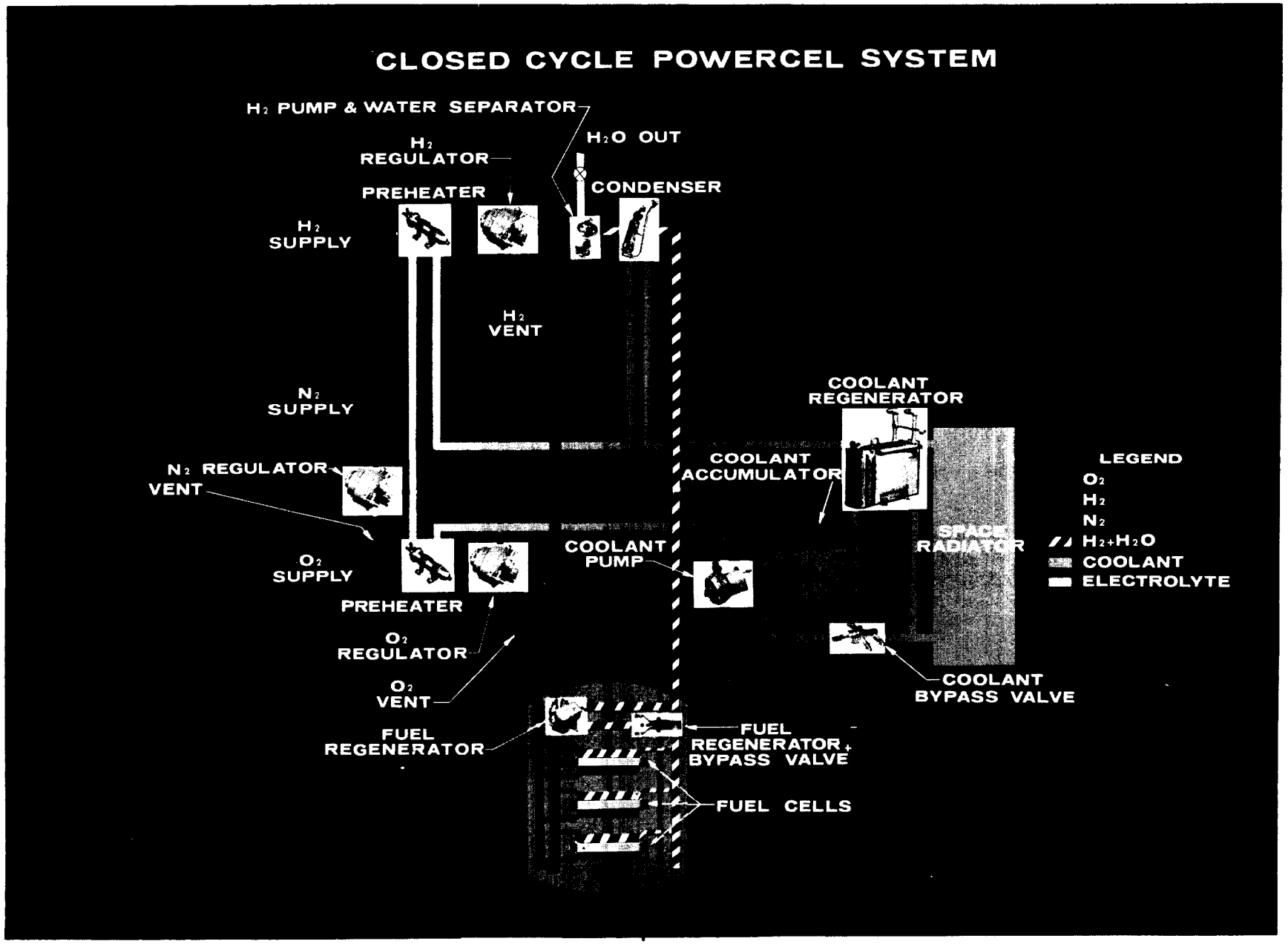

SHELAB POWER SYSTEM

FIGURE 6-14. FUEL CELL MODULE (CLOSED SYSTEM SCHEMATIC)

c) A radio-isotope thermo-electric generator (RTG) is the auxiliary power unit principally used for supplying the SHELAB/LTV with low power (100 watt, 28 VDC) for the ECS equipment during the 180-day dormant period. It will supply power for communication, guidance, navigation, and unloader systems. The RTG will be installed outside the cabin, and will have the shielding required by the equipment for lunar operation. A system for nuclear auxiliary power (SNAP) is under consideration for this unit.

6.5 COMMUNICATIONS CONSIDERATIONS

The telemetry communication system which will be employed will provide command, tracking, voice, telemetry, and video television between the SHELAB and the NASA Manned Space Flight Network (MSFN). It also will be necessary to transmit pictures of the lunar surface and profile to the earth station through the use of the television medium.

Navigational command for the unmanned LTV will be relayed from the MSFN through the SHELAB to the LTV. Vehicle unloading and operating commands will be originated from either the MSFN, LEM "Bug" or other lunar payloads.

To make provisions for the command and control between the earth station and the SHELAB, a communication system link has been selected which will be compatible with the other planned Apollo Systems, as shown in Figure 6-15.

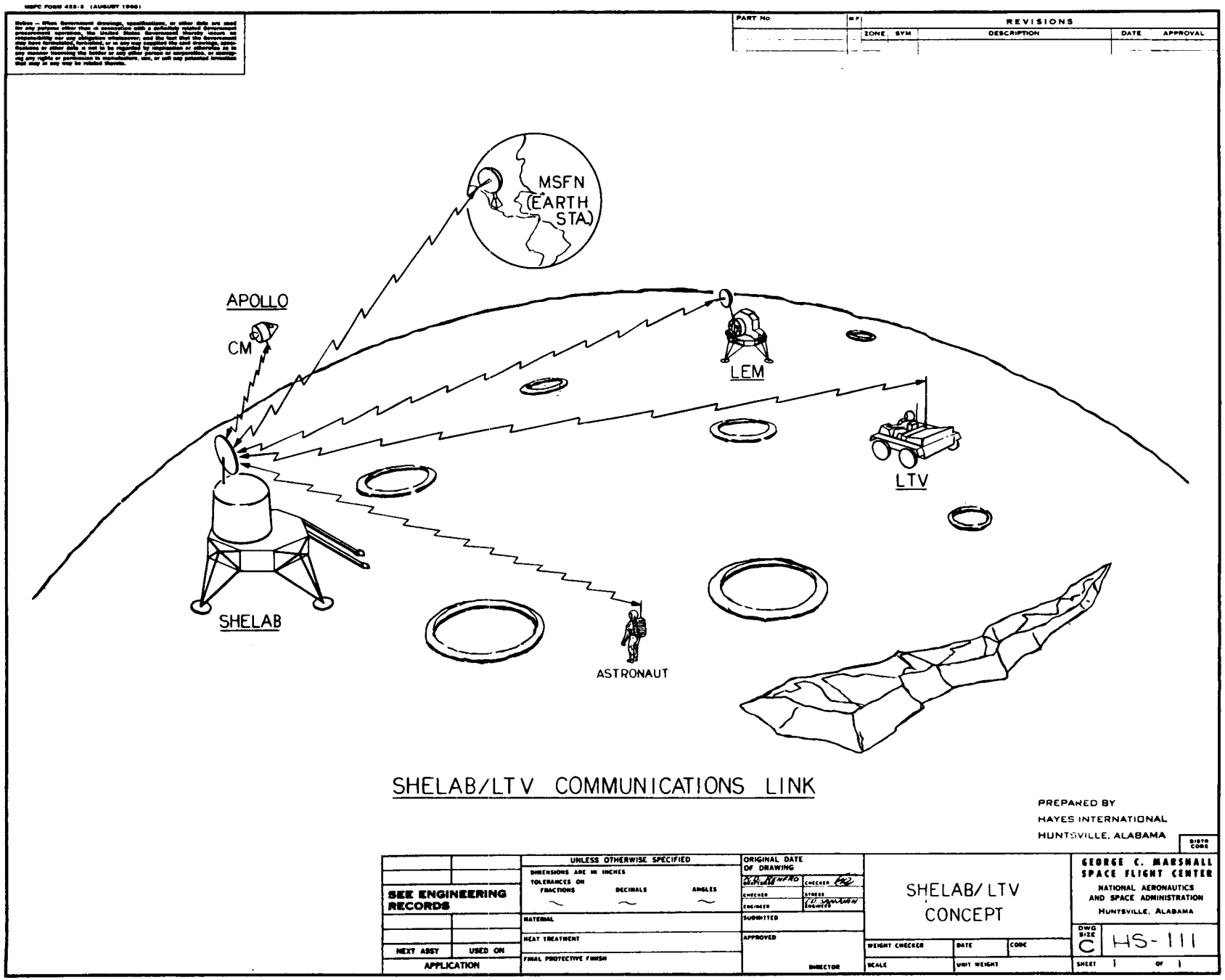

FIGURE 6-15 SHELAB/LTV COMMUNICATIONS LINK

7.0 LTV DESIGN

7.1 GENERAL

The lunar traversing vehicle will provide a means of transportation for a single astronaut. He will operate the vehicle manually, and will utilize it to perform scientific survey, exploration, and data acquisition on the lunar surface.

The basic vehicle contains systems and subsystems which allow it to negotiate lunar surface obstacles. The vehicle, manned or unmanned, is equipped to perform scientific experiments as planned. The following target weights are assumed for the LTV design:

	kg	lbm
Structure	123.5	270
Mobility	158.1	350
Power	135.9	300
Navigation	36.9	80
Communication	45.4	100
Environmental Control	54.4	120
Control and Displays	22.6	50
Expendables	91.2	200
TOTAL	679.0	1500

7.2 VEHICLE DESIGN APPROACH

The philosophy assumed in the design of the vehicle was primarily based on the scientific mission that the vehicle will take part in and the type of surface obstacles that the vehicle will be required to negotiate. Based on past experience with light military vehicles, with special emphasis placed on the jeep, mule, etc., it was proven that this light vehicle shows excellent maneuverability characteristics in traversing the Yuma Desert range, especially when the driver selects his scope of traverse. Conditions similar to those in the Yuma Desert should exist on the moon, with slight variance in surface condition and a difference in gravity noted. Therefore, the proposed lunar traversing vehicle, shown in Figures 7-1 and 7-2, should be able to negotiate the lunar surface with little difficulty, especially if 91% of the predicated lunar slope is 0 to 5 1/2°.

The proposed lunar traversing vehicle, weighing 679 kg (1500 lbs), has four individually power-driven wheels and an automotive-type steering system applied to the front wheels. The basic body is a single-unit, welded light aluminum structure, supported by the four wheels, as shown in Figures 7-1, 7-2, and 7-3.

7.2.1 STORAGE COMPARTMENT

The storage compartment contains sufficient life support and power system expendables to make nine exploratory mission trips within the radius of five miles.

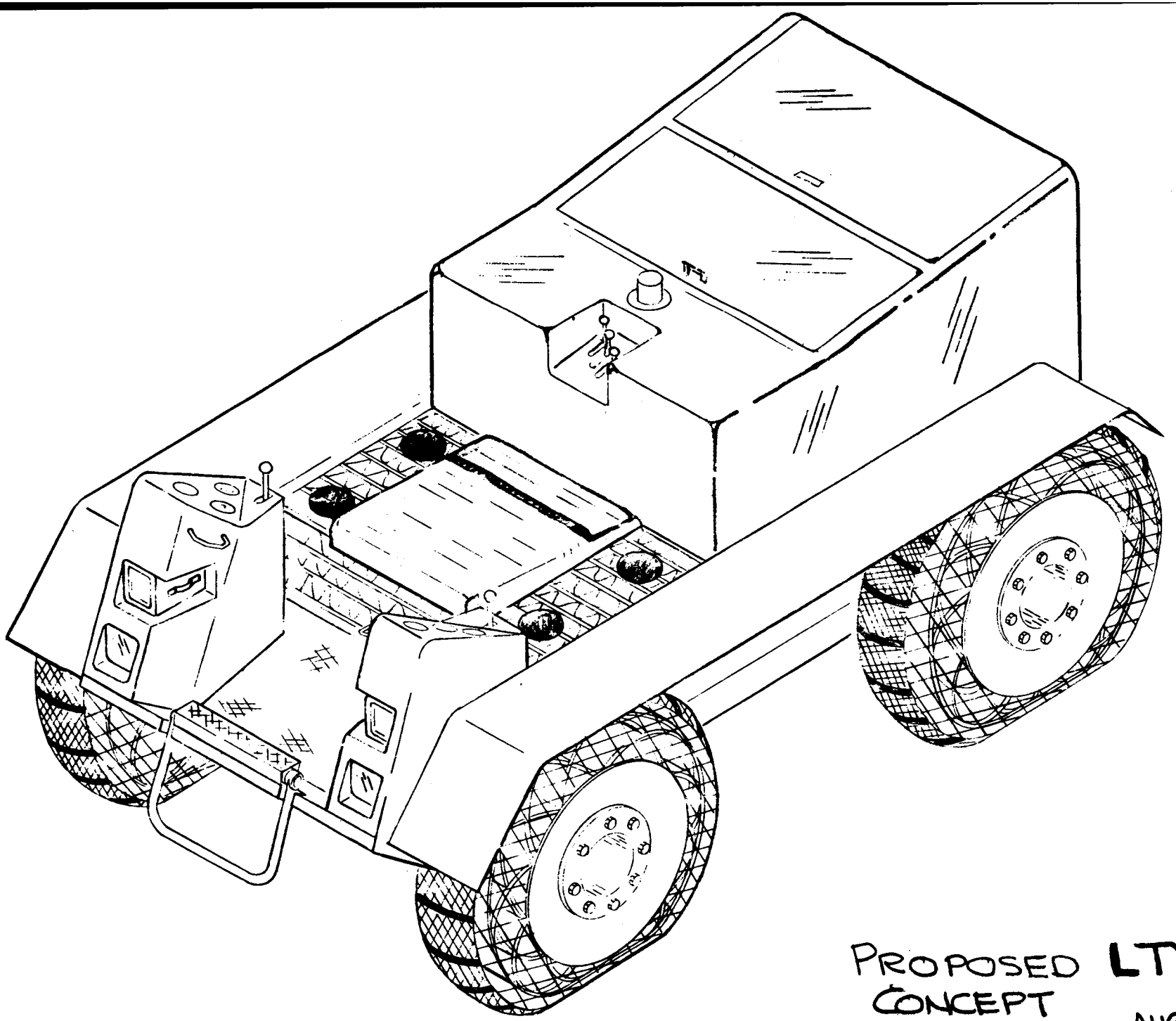

FIGURE 7-1. PROPOSED LTV

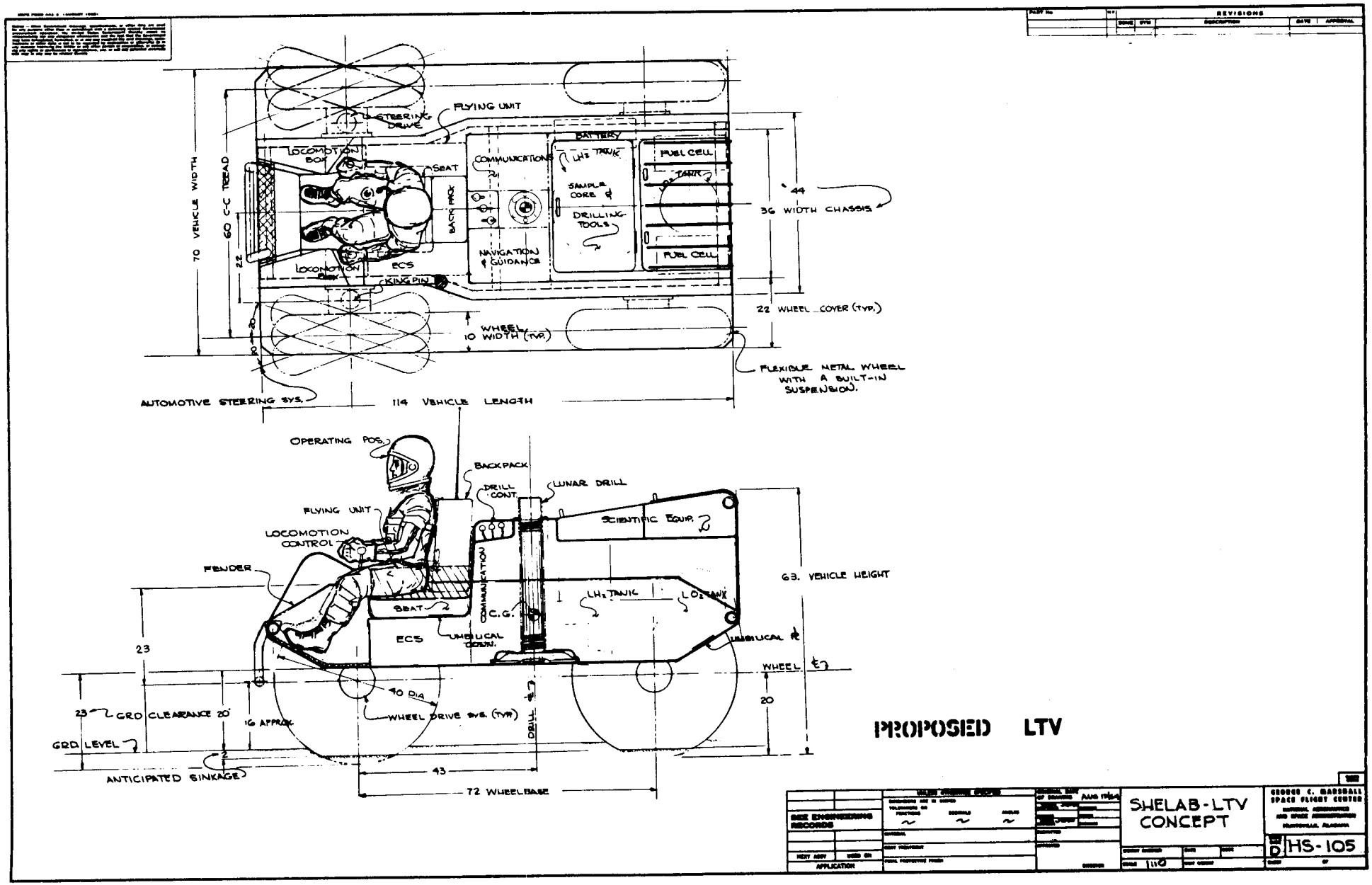

FIGURE 7-2 PROPOSED LTV

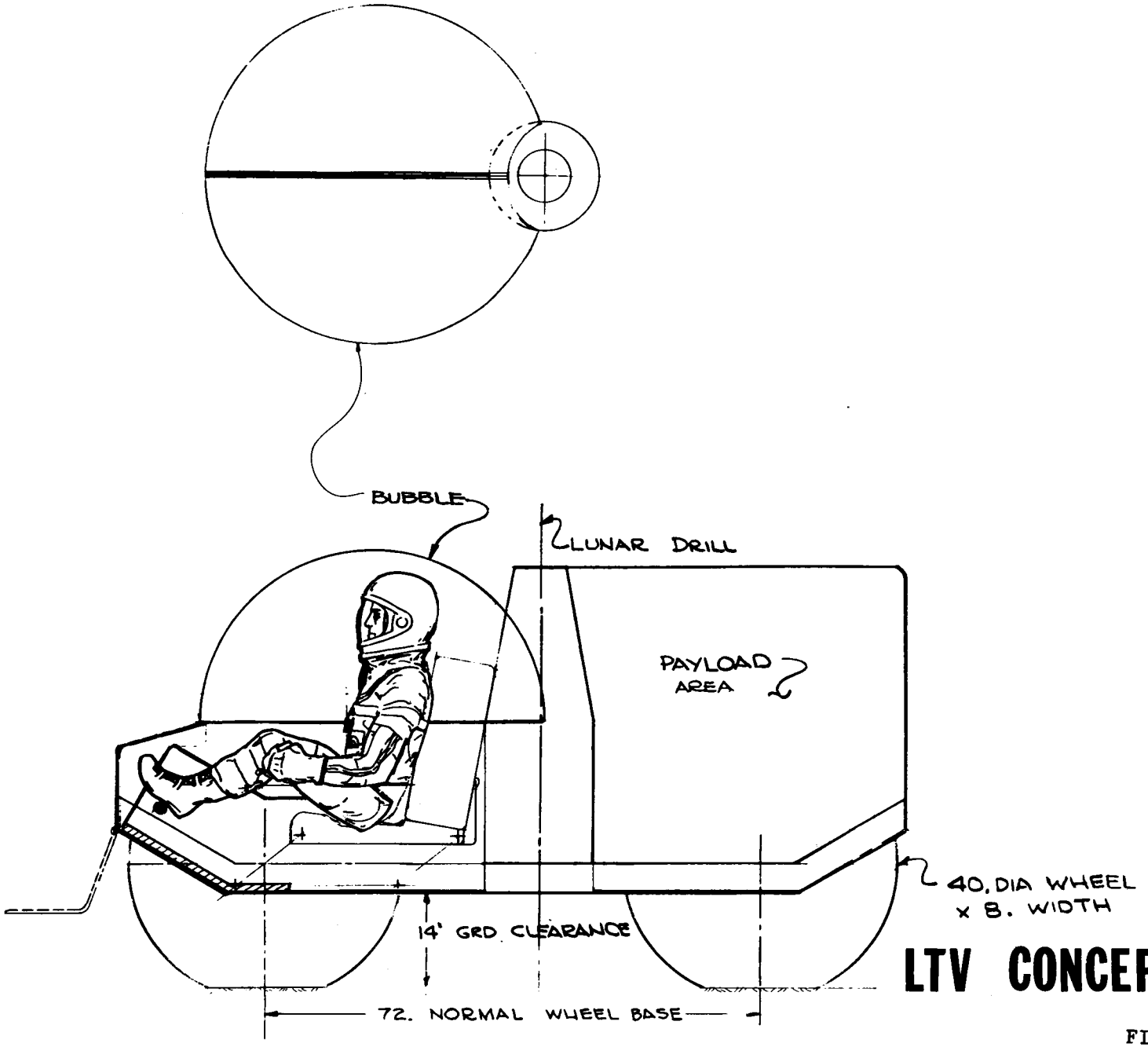

LTV CONCEPT 2

FIGURE 7-3

7.2.2 LUNAR DUST COVERS

The accepted theory of the presence of at least a thin layer of fine material produced by micrometeoroid impact presents an environmental hazard for lunar vehicles.

A vehicle traveling at a maximum speed of five mph will lift and transport some dust in the direction of the vehicle. Some of the lunar particles will adhere to the vehicle wheel or to other exposed parts of the vehicle surface.

To protect the astronaut and equipment from some of these dust particles, protectors and guards are provided on the LTV.

7.3 VEHICLE MOBILITY AND LOCOMOTION

The following mobility factors were considered in the LTV design concept:

a) The LTV will be capable of achieving and maintaining a speed of 0.08 m/sec to 0.2 m/sec (2 to 5 mph).

b) It is capable of negotiating a maximum slope of 13° to 15°.

c) It is designed for a cruising range of at least 8 km (4.97 miles).

d) It will provide twenty-eight scientific mission trips.

e) The vehicle dynamics will be compatible with human and equipment requirements.

f) The vehicle will have an earth weight of 679 kg (1500 lbs) and a lunar weight of 113 kg (250 lbs.).

g) The vehicle will be designed for a single astronaut weight of 87.2 kg (193 lbs) earth weight; 14.5 kg (32 lbs) lunar weight.

Tables 7-I through 7-III summarize surface and mobility data.

7.3.1 WHEELS

A flexible wire wheel with a built-in suspension in the form of a metal-elastic wheel constructed as an inner tube, to be called a tri-flexo wheel in this report, is proposed for the LTV (see Figures 7-4 and 7-5). Such a built-in suspension will eliminate the use of mechanical linkages. The outer wheel will have a static deflection of 5.07 cm (two inches), providing a foot print area of 0.124 m^2 (1.53 ft^2). The wheel size selected has a diameter of 102 cm (40 in), and a width of 25.4 (10 in). The wheel will simulate a semi-rigid wheel.

The use of the flexible metallic wheel will take advantage of the following:

a) Increase of footprint

b) Decrease in sinkage

c) Increase of draw-bar pull

d) Minimization of rolling resistance

LTV MOBILITY DATA

SOIL DATA:

ϕ	Angle of friction	32°
K_ϕ	Mod. of Soil Deformation	.5
n	Factor of Sinkage	.5
c	Coeff. of Soil Cohesion	0
K_c	Mod. of Soil Deformation	0
f	Coeff. of Friction	.6-.8

OBSTACLE:

X	CREVICE WIDTH	35 IN
h	OBSTACLE HEIGHT	10 IN
α	ANGLE OF SLOPE	27° MAX

VEHICLE CHARACTERISTICS:

γ	Angle Chassis Inclination	15°
A	C.G. Location W/Rear Axle	29 IN
L	WHEEL BASE	72 IN
b	TRACK OR TREAD	60 IN
W_E	VEHICLE WEIGHT EARTH	1500 LBS
D	DIAMETER	40 IN
r	WHEEL RADIUS	18 IN
d	HEIGHT C.G. OFF GRD	35 IN
Y	VEHICLE WIDTH	70 IN
l	GRD. CONTACT AREA	22 IN
A/L	C.G. LOCATION TO WHEELBASE	.4
D/L	DIAMETER TO WHEEL BASE	.5
X/D	CREVICE TO DIAMETER	.86

PERFORMANCE CHARACTERISTICS:

P	GROUND PRESSURE	1.24 PSI
F	COEFF. ROLL RESISTANCE	.6 - .8
R	ROLLING RESISTANCE	38.0 LBS
H	MAX SOIL THRUST	39.1 LBS
S	DRAW BAR PULL / WEIGHT	129.[illegible] TOTAL
E	ENERGY REQ'T.	.199 KW-HR/M
F_c	SPECIFIC FUEL CONSUMPTION	.157 LB/MILE
Z	VEHICLE RANGE	4.9 MILES
v	VEHICLE VELOCITY	5 MPH
W	WHEEL LOAD	62.5 LBS
T	WHEEL TORQUE	62.5 FT-LBS
B_d	BRAKING DISTANCE	15 FT

TABLE 7-I LTV MOBILITY DATA

LTV LUNAR SURFACE ANALYSIS

VEHICLE DATA:
WEIGHT - 1500 LBS
MAX POWER AVAIL - 1 KW

WHEEL DIA. - 40 IN
TREAD - 10 IN
DRIVE EFF - 50%

RESULTING DATA:
AVE VELOCITY (MPH) - .04
ENERGY/MILE (KW-HR) - .1969

UP-SLOPE ANALYSIS	0	5	10	15	20	22½
SLIP %	.064	.102	.186	.290	.476	.72
KW-HR / MILE	.2070	.2447	.3243	.4878	.8127	1.6281
KW	1.0	1.0	1.0	1.0	1.0	1.0
FT-LBS TORQUE	20.29	23.01	27.65	36.28	44.61	47.75
MPH	4.83	4.09	3.08	2.05	1.23	.61
SINKAGE (IN)	2.372	1.243	0.619	.611	.600	.464
RESISTANCE (LBS)	48.70	55.24	66.37	87.07	107.06	114.06

DOWN-SLOPE ANALYSIS	22½	20	15	10	5	0
SLIP %	.00	.00	.00	.00	.018	.064
KW-HR / MILE	-.3051	-.2542	-.1683	-.0813	.0472	.207
KW	1.0	1.0	-.842	-.407	.236	1.0
FT-LBS TORQUE	-31.96	-26.63	-17.63	-8.52	4.86	20.29
MPH	-3.28	-3.93	5.0	5.0	5.0	4.83
SINKAGE (IN)	.464	.60	.611	.619	1.243	2.372
RESISTANCE (LBS)	-76.70	-63.92	-42.31	-20.44	11.67	48.7

TABLE 7-II LTV LUNAR SURFACE ANALYSIS

MOBILITY COMPARISON

CHARACTERISTICS	LTV	EARTH CARRIER
	LUNAR TRAVERSE VEHICLE	¼ TON — 4 x 4 M 274
PHYSICAL:		
WEIGHT, EMPTY	500 LBS	900 LBS
FULLY LOADED	1500 LBS	1900 LBS
TOTAL PAYLOAD	1000 LBS	1000 LBS
DIMENSIONS:		
LENGTH	114 IN.	118 IN.
HEIGHT	65 IN.	49 IN.
WIDTH	70 IN.	49 IN.
WHEEL BASE	72 IN.	57 IN.
TREAD	60 IN.	40 IN.
PAYLOAD SPACE	28 FT^2	25 FT^2
GRD. CLEARANCE	20 IN.	8.5 IN.
SINKAGE	2.2 IN.	2 IN.
ANGLE OF APPROACH	50 DEG	40 DEG
ANGLE OF DEPARTURE	44 DEG	34 DEG
MAIN SYSTEM:		
POWER	FUEL CELL H_2-O_2	GASOLINE ENGINE
TRANSMISSION	HARMONIC 50:1	3 SPD. FWD., 1 SPD. REV.
STEERING	2-4-WHEEL	4-WHEEL
SUSPENSION	NONE	NONE
WHEELS	METAL-FLEXO	PNEU
BRAKE	ELEC	MECH
PERFORMANCE:		
SPEED	5 MPH	25 MPH
TURNING RADIUS	9 - 11 FT	9 FT
CRUISING RANGE	8KM - 5M	125 MILES
TYPES OF TERRAIN	SAND, FINE, FLUFFY, LOOSE DRY, COMPACTED, & HARD	SAND, PLAIN DRY, WASH DESERT, PAVE STONY DESERT HUMMOCKY SAND

TABLE 7-III MOBILITY COMPARISON

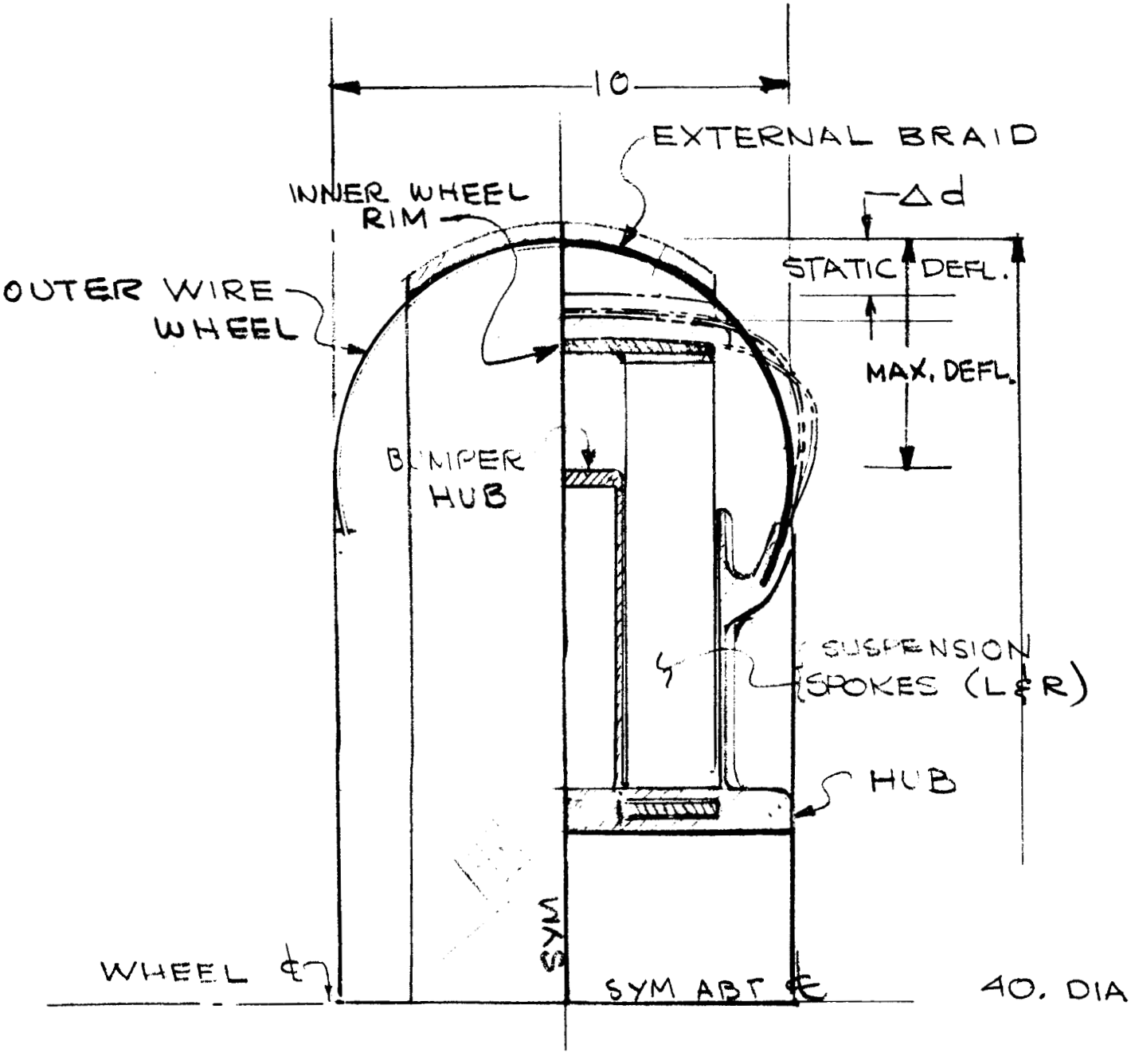

FIGURE 7-4 TRI-FLEXO WHEEL (CROSS SECTION DETAIL)

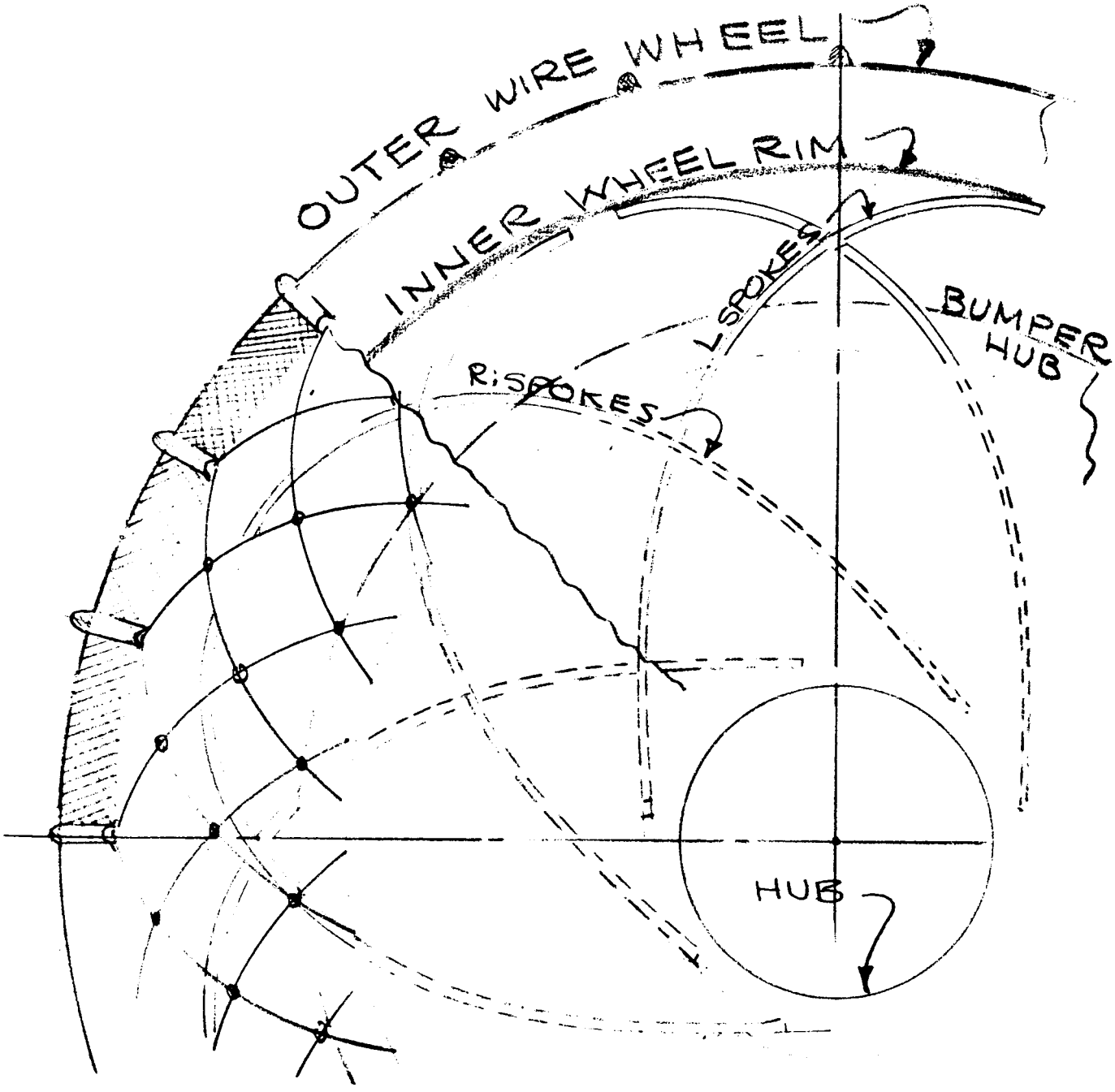

FIGURE 7-5 TRI-FLEXO WHEEL

e) Unaffected by temperature extremes

f) Resistant to cutting and abrasions

g) Not subject to digging

h) Built-in suspension

An electric motor drive anchored to the vehicle frame will directly support the wheel hub through a harmonic drive. The motor is rated 1/4 hp, 3600 rpm, with a 50:1 harmonic drive ratio.

7.3.2 STEERING

The selected mode of steering is the standard automotive type, providing individual electric motor drive to the king-pin. The angle of turn is 20 degrees to the left or right; the computed turning radius at 5 mph is 3.65 m (12 ft).

The steering controls will be located at the locomotion boxes, shown in Figure 7-2 , providing a servo-system. D.C. brushless torque motors will be used for the drive system and will be attached to the king-pin shaft for wheel angular motion. Some of the advantages of using this torque are:

a) Direct drive promotes system accuracy

b) High torque-to-inertia at the output shafts

c) Low power input

d) High torque output characteristics

e) Compact unit

f) High torque-to-inertia ratio

This type of motor also is applicable to the antenna drive system and periscope control drive system of the SHELAB.

7.3.3 SUSPENSION SYSTEM

The suspension system is a primary requirement in the design of the LTV, which requires damping characteristics with functions similar to those of a vehicle with solid axles. Since the vehicle will be traveling at a slow velocity, the incorporation of the suspension system inside the tri-flexo wheel should be ideal, as shown in Figures 7-4and 7-5. The flexible round wire which links together at regular intervals and is anchored to the wheel hub at each end to form a torus, allows the free pantographing required for radial flexibility and circumferential stability.

The treads, which are formed by the external braiding, meet the traction requirements of the vehicle. The outer wheel absorbs smaller shock loads, and at the same time acts as a radiator.

As the tri-flexo wheel vehicle encounters small lunar obstacles, the outer wire wheel absorbs the shock created and transmits it to the wheel hub and to the vehicle frame.

As the vehicle encounters larger lunar obstacles which cause the outer wire wheel to increase in deflection, pressure is applied to the inner wheel rim, causing a proportional deflection. The wheel forms a semi-elliptical

shape due to the side expansion or wheel growth. This growth forces the inner wheel rim toward the inner part of the outer wire wheel, presenting a combined reaction and forming a semi-rigid wheel.

As the load increases and the maximum deflection has been obtained, the wire wheel braid with the inner wheel rim will hit the bumper plate, transforming the tri-flexo wheel into a solid flat tire.

A wheel with a built-in suspension will improve vehicle stability, give greater damping characteristics and greater reliability due to the three-wheels-in-one concept, and will eliminate linkages, ball joints, springs, etc. The vehicle frame will absorb the effects of bending torsional loads, transmitted by the suspension system.

Another suspension system applicable to the LTV vehicle is a two-plate linkage with pivoting balls, which uses a torsion bar to absorb the heavy shock loads transmitted by the flexible metallic wheel.

7.3.4 BRAKING SYSTEM

The braking force of the vehicle is accomplished by decreasing the vehicle velocity (vehicle deceleration), which, in turn, produces a torque retardation effect on the electric motors. This motor reaction is the dynamic form of braking caused by either D.C. excitation plugging or by capacitors.

For emergency braking or parking brake-locking, a disk brake system will be applied. The disc brake system consists of a metallic disc which

rotates with the wheels, and small stationary friction pads (either round or wedge-shaped) which are forced against the sides of the disc by a caliper (C-shape). The advantages of disc brakes are:

a) Freedom from Fade

b) Self-Adjusting Capabilities

c) Long Life

d) Light Weight

e) Ease of Maintenance

7.4 VEHICLE UNLOADER

The method of unloading the vehicle is the key to the determination of the size and weight of the LTV. Previous conceptual studies show that there are two operational procedures involved in unloading the vehicle: the operation for positioning the mechanical device or structure for the unloading, and the actual vehicle unloading. However, a study of military vehicles and other known construction equipment-type unloaders has shown that the preparatory operation could be eliminated.

The unloading system proposed in this study requires a simple arm pivoted from the side of the LEM/T, supporting the vehicle at the end opposite the pivot point. The vehicle will be in an upright position while stored in the LEM/T, with the bottom of the chassis tied down to the arm. A small amount of force will be required to bring the arm over the center of the pivot point, and the vehicle weight will be sufficient to lower the arm and LTV to the ground level. Two concepts for unloading using this system are shown in Figures 7-6, 7-7, and 7-8.

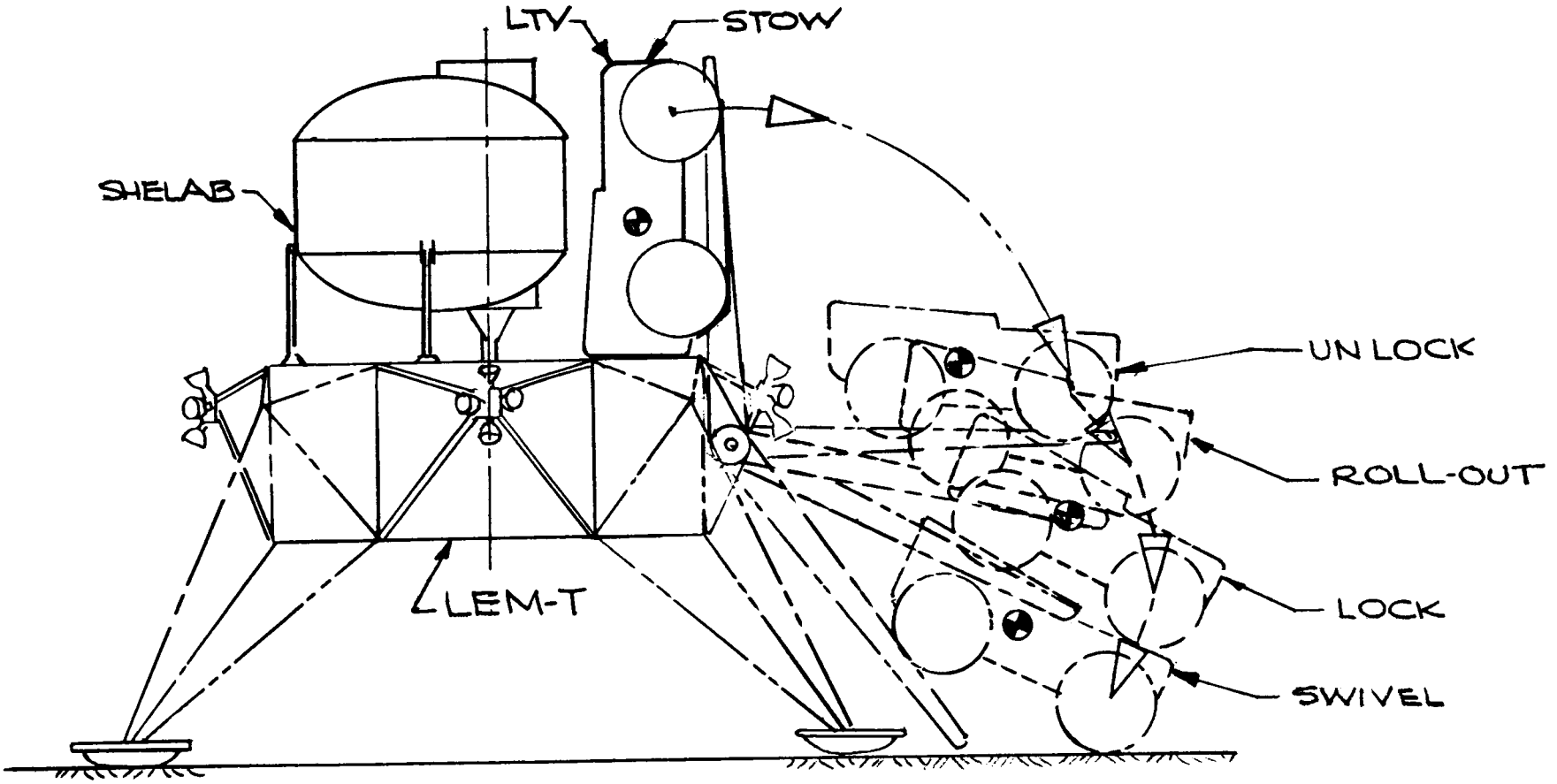

UNLOADING SYSTEM SEQ.
CONCEPT #1

AUG. 17, 1964

FIGURE 7-6. UNLOADING SYSTEM SEQUENCE

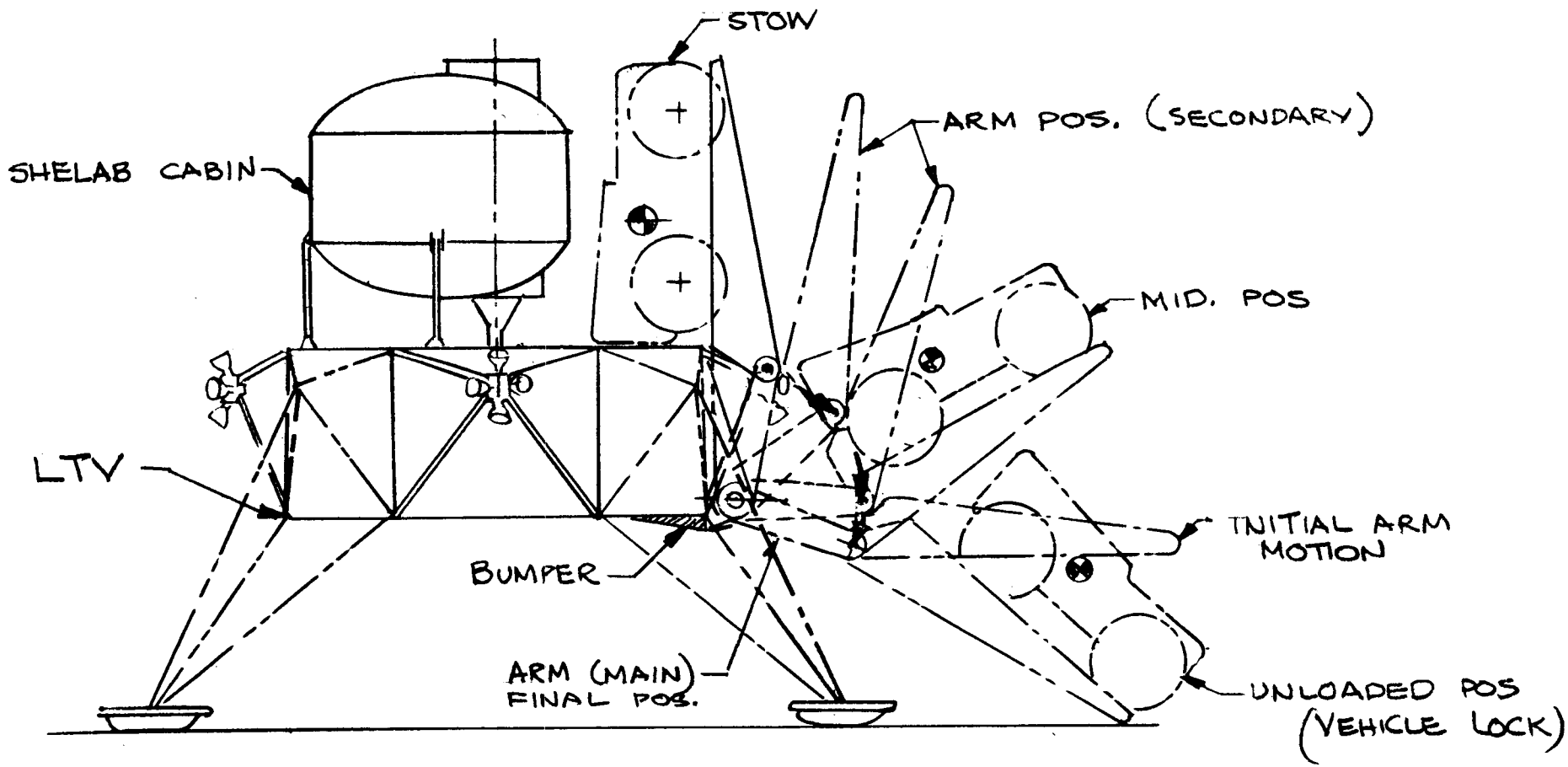

FIGURE 7-7. UNLOADING SYSTEM SEQUENCE

UNLOADING SYS SEQ
CONCEPT # 2

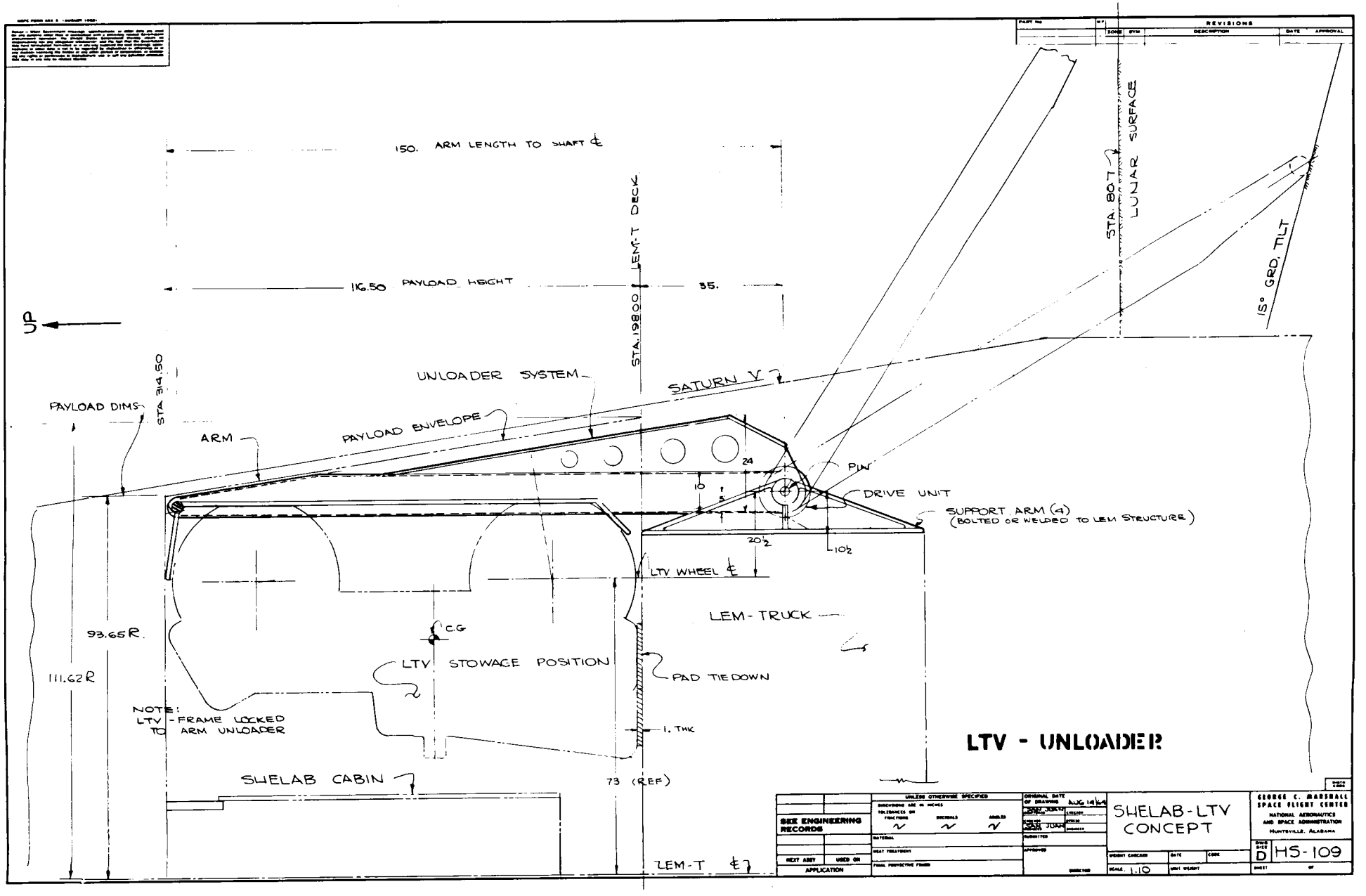

FIGURE 7-8 LTV UNLOADER

7.5 LTV POWER CONSIDERATIONS

The LTV can be powered by two fuel cells of one kw capacity, 28 VDC, in an open type system, shown in Figure 7-9. The fuel cell modules will provide all the electrical power required to operate the systems and subsystems, including the wheel drive, the steering drive, communication, the lunar drill, navigation, ECS, and other systems required by the astronaut.

Cryogenic tanks for the LO_2 and LH_2 fuel will be installed at the rear end of the vehicle, supported from four points by a spider-web structure. The fuel capacity of the tanks will provide the LTV with a 14-day, 24-hour continuous operation capability.

7.6 COMMUNICATION

Communication between the SHELAB astronaut and the LTV explorer will be required for successful vehicle operation and mission success. Two methods of communication with the LTV are possible: through the main communication system and through the backpack.

The main communication will be accomplished by using a 3.04 to 6.08 m (10 to 20 ft) whip antenna, as shown in Figure 6-2. This system is integrated with the ECS, and is connected to the umbilical plate, as shown in Figure 7-2. The radiated power required to implement this technique fully will be approximately one kw. A 200 kc frequency band will be sufficient for voice telemetry, tracking, and control.

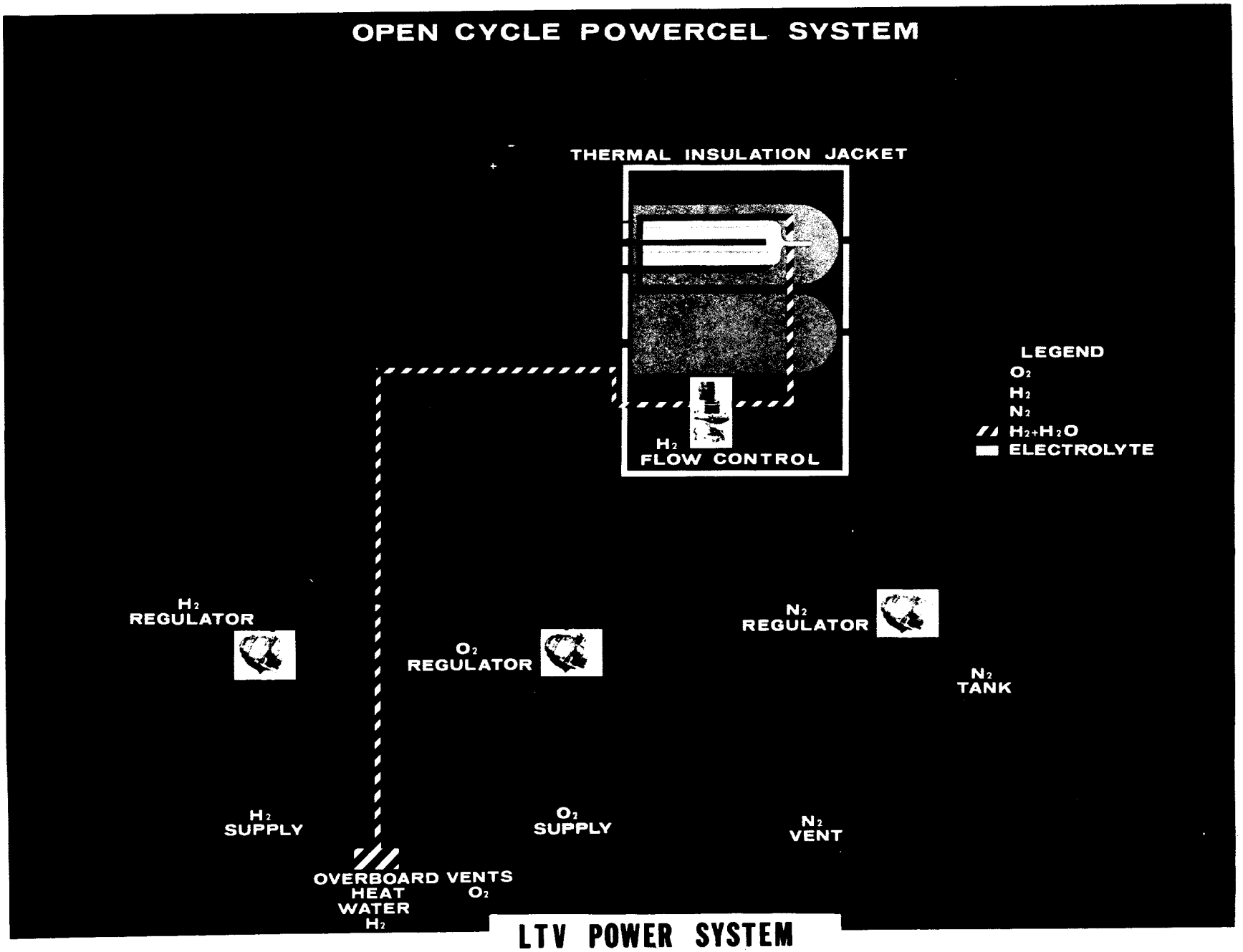

FIGURE 7-9. LTV FUEL CELL MODULE (OPEN CYCLE SYSTEM SCHEMATIC)

A two-way voice communication and a stereo television system will be provided for the LTV while on the scientific mission. The stereo camera will have an electrically controlled scan mechanism, required for navigation and guidance. It also will serve to pictorially record the area surveyed by the astronaut. The stereo cameras will be removable and portable, which will aid in recording special geological formations in the lunar surface.

As the range of the vehicle will be limited to 8 km (5 miles), line-of-sight communication also might be possible for this type of mission.

7.7 NAVIGATION

The navigation system will provide the various sensing and computational methods of determining the orientation of the vehicle with respect to the LEM/T landing site, the vehicle speed and distance, and the various phases of mobility operations.

Various methods of navigation could be applied to the LTV, but the method selected should be the simplest and most reliable, and the method which has the minimum equipment weight. Some of the navigation methods applicable to the LTV are:

a) Beacon Tracking - This would be an ideal method, due to the limited range that the vehicle is allowed to travel.

b) Celestial Sighting with a Star Tracker or Astro-Sextant - A scan pattern can be made to locate a navigational star.

c) Stereo Television on Known Lunar Profile

d) Optical Method of Tracking - This could be accomplished by the use of a theodolite or transit-type device to assist in plotting the vehicle position or in mapping.

Communication equipment plays an important role in navigation, including measuring the distance of the vehicle from the point of origin. Digital computers are used for remote control tasks in monitoring vehicle operation or steering.

The required vehicle control (remote or manned) could be accomplished by providing the LTV with a lunar surface navigation system which would be comprised of the following equipment:

a) Two Axes of False Horizon (for vertical reference)

b) An Azimuth Reference

c) An Odometer

d) A Dead Reckoning Reference

e) A Navigation and Guidance Control Display

f) An Astro-Sextant (hand)

g) A Data Table

h) A Clock (time of day)

i) A Communication System

j) A Whip Antenna

k) A Stereo Camera

l) An Inclinometer

The selection of the navigation and guidance system will be based on the specific mission requirements imposed and the selected site of landing.

7.8 VEHICLE SURVIVABILITY

7.8.1 SPACE SUIT AND BACKPACK

One of the most important life support requirements is the space suit and backpack, which is a portable life support system. The suit is designed for a 3.5 psi operational pressure. It has a 100% oxygen atmosphere and weighs 9.513 kg (21 lbs), excluding the backpack.

The astronaut will wear his suit while operating the lunar traversing vehicle; during this mode of operation the astronaut also will depend on his backpack, which weighs approximately 14.04 kg (31 lbs). The backpack contains an oxygen supply for four hours at 800 psi, a canister for carbon-dioxide removal using lithium hydroxide, a battery-operated fan for air circulation, a voice communication unit, a water boiler to dissipate heat and moisture, a water separator which removes excess moisture from the oxygen, an umbilical connection, and a 28 VDC battery capable of a four-hour operation.

Since the suit and backpack will be the primary life support system, a certain amount of redundance should be allowed, such as the secondary pressurization system, which is sufficient for a momentary emergency condtion. One spare backpack in the LTV will be packaged as semi-portible equipment.

7.8.2 FLYING BELT

The flying belt is proposed in this study as a means of personal mobility for the astronaut, to be used in case of an emergency and in the exploration of areas that a vehicle would be unable to approach. With the use of such a belt, if conditions arise that leave the astronaut without adequate personal mobility, or if the vehicle is incapacitated due to hazadrous surface obstacles, the astronaut will be capable of returning to the SHELAB.

The one-man flying device Figure 7-10, can be adapted to the LTV drivers' seat profile. The pertinent characteristics of this flying device are:

a) Mounted on the body

b) Hydrogen propellant

c) Catalyst - Sheet #405

d) Impulse - 13.500 lb/sec

e) Number of thrusters - 4 of 13.6 kg (30 lb) ea.

f) Total system weight - 71.8 kg (158.5 lbs)

g) Net Payload - 165 kg (363 lbs)

h) Range of 3.2 km (2 miles)

The above data is taken from a "One-Man Propulsion Device for Lunar and Free-Space Environments" report by Hamilton Standards.

The flying belt also is servicable to the astronaut in investigating lunar crevices or craters for the purpose of taking pictures or securing geological samples.

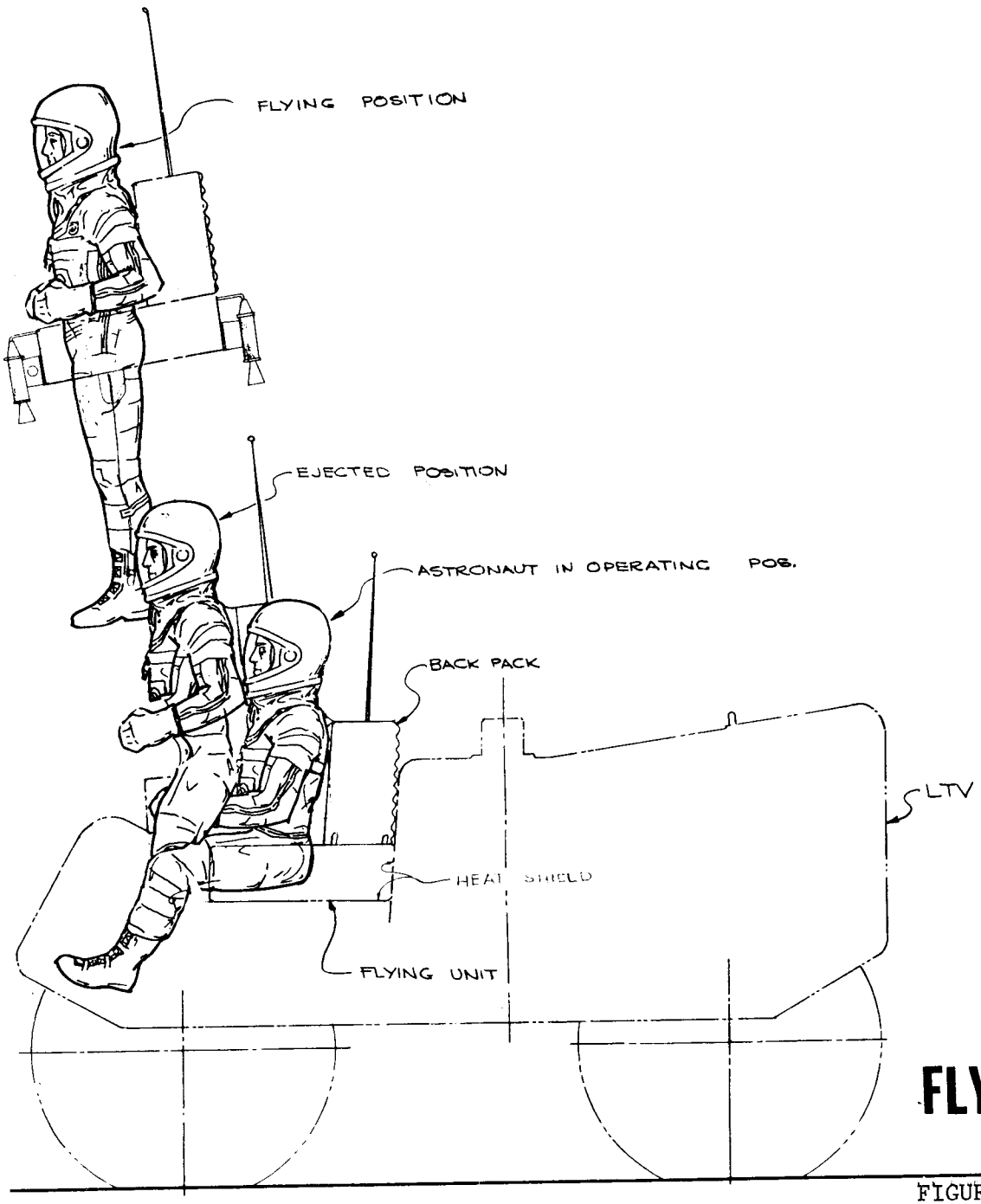

FLYING BELT UNIT

FIGURE 7-10 Flying Belt Unit

FIGURE 7-11 FLYING DEVICE

8.0 OPERATIONAL CONSIDERATIONS

The operational profile of the ALSS may be classified in seven basic phases of operation. These phases are:

a) Assembly of ALSS Space Vehicle

b) Launch Preparation

c) Launch Operations

d) Earth to Lunar Flight

e) Lunar Landing

f) Unmanned Lunar Mission

g) Manned Lunar Mission

Items a, e, f, and g will receive brief attention here.

8.1 ASSEMBLY OF THE ALSS SPACE VEHICLE

The ALSS space vehicle is composed of the following components:

- ALSS SPACE VEHICLE
  - SATURN V
    - IU
    - SIV B
    - SII
    - S - IC
  - ALSS SPACE CRAFT
    - CM
    - SM
    - LES
    - ALSS - M
      - LEM/T
      - SHELAB/LTV

The location of the ALSS Module in the ALSS Space Vehicle is shown in Figure 8-1, which also includes the weight constraints assumed.

8.2 LUNAR LANDING

Preparation for landing checkout involves final selection, from the CSM, of a lunar landing spot, followed by the automatic checkout of the LEM/T and SHELAB/LTV subsystems. Then, the LEM/T's IMU alignment must be made before the descent stage is landed.

Separation of the LEM/T from the CSM is initiated and LEM/T automatic guidance control and navigation takes over, landing the vehicle in the selected landing area.

With the help of the stereo TV camera, the selected landing area will be free of deep depressions, craters, faults, proturbances, etc. The ideal spot will be almost flat terrain.

8.3 UNMANNED LUNAR OPERATION

The sequence of steps taken when the ALSS Module lands on the moon is:

a) Telemetry is activated.

b) SHELAB antenna is extended and the parabolic disc is oriented toward the MSFN earth station.

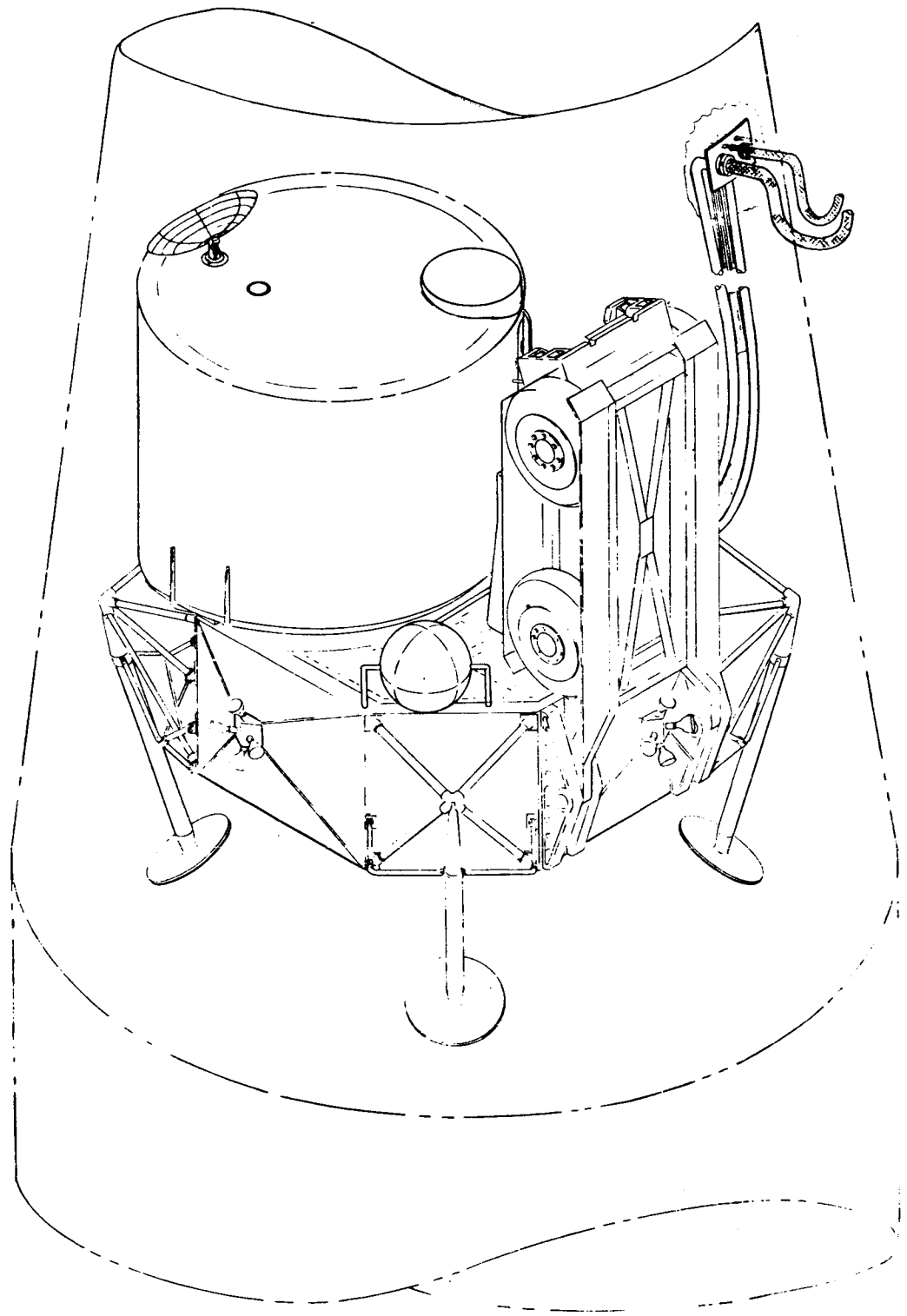

PROPOSED ALSS MODULE

WEIGHT SUMMARY				
	R-P & VE-AB		ALSS	
■ LTV	830	1829		
■ SHELAB	1880	4143		
■ UNLOADER	171	375		
■ CONTINGENCY	69	153		
• LEM-T PAYLOAD	– 2950	6500	3680	8100
• LEM-T CONTINGENCY	– 730	1600		
• LEM-TRUCK	– –	–	8920	19645
• ALSS MODULE	– –	– KG	12600	27745 LBM
• SATURN V LAUNCH VEHICLE				

LIST OF MATERIAL

SHELAB-LTV CONCEPT

GEORGE C. MARSHALL SPACE FLIGHT CENTER
NATIONAL AERONAUTICS AND SPACE ADMINISTRATION
HUNTSVILLE, ALABAMA

J HS-100

FIGURE 8-1 PROPOSED ALSS MODULE

c) SHELAB periscope is extended, with the TV camera taking pictures of the landing perimeter. The cabin level orientation is adjusted as required by the azimuth leveler.

d) Periscope is aimed at the unloading point of the LTV for survey of that area. As the signal for unloading is given, the unloader arm rotates with the LTV and the whip antenna is freed. As the unloader arm nears the ground level a limit switch automatically decelerates the arm to a creeping speed until it reaches the ground level.

e) The LTV's auxiliary power unit is started and a complete checkout of the systems is monitored.

f) The vehicle is unloaded from the unloading arm and a command is given to the navigational and guidance control system to start the vehicle in a forward motion, at the same time releasing the brake locks.

g) Vehicle motion exercise will be initiated to functionally test the vehicle systems.

h) Data on the environmental conditions of the moon will be sent from the LTV through the SHELAB to MSFN.

i) A shut-down command is given preparatory to the 180-day storage period.

j) Periodic checkout of all systems and subsystems is monitored.

k) A full system checkout of the SHELAB and LTV is made before the manned mission is undertaken, to assure the proper functional condition of the SHELAB/LTV.

8.4 MANNED LUNAR MISSION

After a complete functional checkout of all systems in the SHELAB/LTV has been completed, the following steps are taken:

a) The LEM with the two astronauts will land in the vicinity of the ALSS Module.

b) The astronauts will command the LTV to be started and remotely proceed to the LEM landing area. The LTV will be navigated and guided through the lunar surface by stereo TV cameras.

c) The LEM astronauts will take the LTV to the SHELAB.

d) Once inside the SHELAB cabin, the main power supply will be started and communications with the MSFN, CSM, and LEM will be initiated. Overall inspection of the shelter will be performed.

e) The next phase will be the scope of the basic lunar mission which includes scientific experimentation, topographical survey, surface mapping, drilling for core samples, placing navigation bench-marks, and lunar sighting.

f) Lunar scientific data will be transmitted, complete with pictures, back to MSFN earth station.

g) After completing all the necessary trips and scientific experimentation, on the 14th day the astronauts will return to the LEM in the same manner which they came.

h) After a checkout of the systems is made, the take-off command will be issued for the LEM assent stage to join the CSM in the lunar parking orbit.

9.0 INTERFACE CONSIDERATIONS

The following interfaces were taken into consideration in the SHELAB/LTV design concept:

a) Azimuth Leveler with the SHELAB cabin and LEM/T (Figure 6-11)

   1) Support pads welded to face of LEM/T
   2) Pedestal pad to be welded and supported by LEM/T deck
   3) Support structures and deck plate at mid-center of LEM/T

b) Unloader with LEM/T and LTV (Figure 6-2)

   1) Pads welded to side of LEM/T for arm support
   2) Tie-down pad and lock for LTV vehicle
   3) Support structures and deck plate for tie-down pad
   4) Drive mechanism and unlocking

c) Umbilical Plate, All Areas (Figure 8-1)

   1) Main fuel loading plate
   2) ECS
   3) Main power supply
   4) LTV to astronaut

d) Astronaut with SHELAB/LTV

   1) Sent with backpack
   2) Life support systems

10.0 WEIGHT SUMMARY CONSIDERATIONS

The following tables summarize the **ALSS** module weight and a system weight breakdown for the LTV and **SHELAB**.

Very limited effort demanded that weight estimates be made primarily on the basis of previous **MOLAB** studies.

10.1 ALSS SUMMARY WEIGHT

	kg	lbm	
SHELAB	1880	4143	
LTV	830	1829	
Unloader and Tie-down	171	375	
Contingency	69	153	
LEM-Truck Payload	2950	6500	(target weight)
LEM-Truck Contingency	730	1600	
TOTAL LEM/T PAYLOAD	3680	8100	(target weight)
LEM-TRUCK WEIGHT	8920	19645	
ALSS MODULE	12600	27745	

10.2 SYSTEM WEIGHT SUMMARY AND DEPLOYMENT

SYSTEM	SHELAB		LTV		TOTAL		REMARKS			
	kg	lbm	kg	lbm	kg	lbm				
Structures	507	1126	84	185	590	1311				
Vehicle Locomotion	N/A	N/A	151	334	151	334				
Electrical	192	422	90	202	283	624				
Navigation, Guidance and Control	87	190	35	80	123	270				
Telecommunications	171	380	54	120	225	500				
Environmental Cont.	114	250	23	52	137	302				
Crew Systems (L. S.)	143	312	31	70	173	382				
Scientific Equipment (L. S.)	207	461	53	119	263	580				
Controls and Displays	102	223	23	52	125	275				
Expendables and Storage	332	729	279	615	612	1344				
Tie-down Interface	23	50	N/A	N/A	23	50				
Leveling	N/A	N/A	N/A	N/A	N/A	N/A	47	103		
Unloading	N/A	N/A	N/A	N/A	N/A	N/A	146	272		
Flying Unit		N/A		N/A		N/A			72	160*
SUBTOTAL	1850	4143	830	1829	2710	5972	171	375	72	160

*Not included in the Weight Summary

SHELAB/LTV Concept

11.0 CONCLUSIONS AND RECOMMENDATIONS

This report has presented the results of an evaluation on lunar shelter and small roving vehicle combined payloads. The study indicates that the SHELAB/LTV concept can meet the weight requirements of 2950 kg (6500 lbs).

The low vehicle weight is due to the various design features in the concept approach such as simple unloading, drive system, and suspension systems. Possibly of more significance were the minimal type operational features such as open cabin, short range trips, one man capability, and limited speed. The required shelter size very readily can be achieved in combination with a small roving vehicle, and problems of C.G. control can be overcome relatively easily by the proper location of equipment external to the shelter.

Even considering the preliminary nature of the weight estimates, the shelter/LTV combination approach appears to offer the potential of considerable mission flexibility or growth. This could be in the form of larger shelters for larger crews, extended stay times, vehicle range extensions, or the incorporation of short range flying devices.

The many possibilities of the shelter/LTV approach have not been explored in this study and additional effort is recommended. It also is recommended that additional component and system analysis be performed on the SHELAB and LTV designs discussed in this report for the purpose of better defining system weights and features.

REFERENCES

1. Wells, E. H., "ALSS Summary Report", Special Assignment Office, October 7, 1963

2. Research Projects, "Lunar Logistics System Payloads, Volume X", MSFC-MTP-M-63-1

3. "Natural Environment and Physical Standards for Project Apollo", August 1963

4. Radiation Shielding Annex "D" Report", R-AERO-S, April 27, 1964

5. "Meteoroid Penetration Criteria Memo", R-AERO-Y 26-24

6. Mason, R. L., W. M. McCombs, and D. C. Cramblit, "Engineering Lunar Models Surface (ELMS), Annex "A" and "G", Kennedy Space Center

7. Hale, Dan, "A Lunar Scientific Mission Profile, Annex "B", NASA, MSFC, INJ/N-64-10, January 31, 1964

8. Schwindt, P. J., "Memo on Scientific Instrumentation Requirements", ALSG Memo, August 20, 1964

9. "LEM-Truck, Phase I Study", NASA Manned Spacecraft Center, Houston, Texas, October 10, 1963.

10. Youngblood, G. J., "Memo on Summary of Cabin Concepts", R-P&VE-AB, February, 1964

11. Schloredt, D. L. and O. R. Kosfeld, "Live Support Study", NASA TM X53032.5, NSL Report

12. Dungan, E. E., and C. O. DeLong, "Fuel Cell Power System", R-ASTR-A, March 16, 1964

13. Merrifield, D. V., "Lunar Power System Analysis", K.S.C. TR-63-2-D, June 16, 1964

14. Hansen, R. H., and Kosfeld, O. R., "Radiator Study", NASA TM X53032.6, March, 1964

15. Moore, R., "Microwave System Studies for a Lunar Mobile Laboratory", ALSG Report H-MOL-18, June 30, 1964

16. "Payloads, Volume X", Research Projects Division, MSFC MTP-M-63-1, March 15, 1963

17. "Mobility on the Lunar Surface, Volume IX", Research Projects Division, MSFC MTP M-63-1, March 15, 1963

18. Laue, J. H., "Miscellaneous Locomotion Guideline Memo", R-P&VE-AB, February, 1964

19. Rains, J. C., "P&VE Preliminary Weights Design Information", Memo, R-P&VE-AB-64-29, April 21, 1964

20. Darwin, C., "Miscellaneous Guidelines and Criteria for Use in ALSS Studies", Memo, R-P&VE-AB, July 20, 1964

21. Darwin, C., "Design Concept Evaluation Cabin Structure", Memo, R-P&VE-AB, March 26, 1964

22. San Juan, E. C., "Articulated Wheel Locomotion System", NASA, ALSG Report, H-MOL-1

23. "Desert Test Carrier", Yuma Test Activity, Yuma, Arizona, Light Weapons Report OTA/IT 5068/2, September, 1959

24. "One Man Propulsion Device for Lunar Environment", Hamilton Standard, NASA, MSC., Houston, Texas

25. "Dressing for Space -- Apollo Suit with Backpack", AIAA Handouts, U.A.C., Hamilton Standard

26. Pratt and Whitney, "Fuel Cell Powercel", AIAA Handouts, Reprint from "Space News", NASA Manned Spacecraft Center, June 10, 1964

DISTRIBUTION

INTERNAL

DIR
DEP-T
R-DIR
R-AERO-DIR
-S
-SP (23)
R-ASTR-DIR
-A (13)
R-P& VE-DIR
-A
-AB (15)
-AL (5)
R-RP-DIR
-J (5)
R-FP-DIR
R-FP (2)
R-QUAL-DIR
-J (3)
R-COMP-DIR
R-ME-DIR
-X
-TEST-DIR
-DIR
MS-IP
MS-IPL (8)

EXTERNAL

NASA Headquarters
MTF Col. T. Evans
MTF Maj. E. Andrews (2)
MTF Mr. D. Beattie
R-1 Dr. James B. Edson
MTF William Taylor

Kennedy Space Center
K-DF Mr. von Tiesenhausen

Hayes International Corporation (5)
Missile and Space Support Division
Apollo Logistics Support Group

Scientific and Technical Information Facility
P. O. Box 5700
Bethesda, Maryland
Attn: NASA Representative (S-AK RKT) (2)

Manned Spacecraft Center
Houston, Texas
Mr. Gillespi, MTG
Miss M. A. Sullivan, RNR
John M. Eggleston
C. Corington, ET-23 (1)
William E. Stanley, ET (2)

Donald Ellston
Manned Lunar Exploration Investigation
Astrogeological Branch
USGS
Flagstaff, Arizona

Langley Research Center
Hampton, Virginia
Mr. R. S. Osborn