R-93

NSAM - 920

COMPARATIVE EFFECTS OF PROLONGED ROTATION AT 10 RPM ON POSTURAL EQUILIBRIUM IN VESTIBULAR NORMAL AND VESTIBULAR DEFECTIVE HUMAN SUBJECTS

Alfred R. Fregly and Robert S. Kennedy

N65 28350

(ACCESSION NUMBER) (THRU)

13 1

(PAGES) (CODE)

CR 63799 04

(NASA CR OR TMX OR AD NUMBER) (CATEGORY)

FACILITY FORM 602

JOINT REPORT

GPO PRICE $ _____

OTS PRICE(S) $ _____

Hard copy (HC) _____

Microfiche (MF) _____

UNITED STATES NAVAL SCHOOL OF AVIATION MEDICINE

NATIONAL AERONAUTICS AND SPACE ADMINISTRATION

March 1965

COMPARATIVE EFFECTS OF PROLONGED ROTATION AT 10 RPM ON POSTURAL EQUILIBRIUM IN VESTIBULAR NORMAL AND VESTIBULAR DEFECTIVE HUMAN SUBJECTS*

Alfred R. Fregly and Robert S. Kennedy

Bureau of Medicine and Surgery
Project MR005.13-6001
Subtask 1 Report No. 108

NASA Order No. R-93

Approved by

Captain Ashton Graybiel, MC USN
Director of Research

Released by

Captain H. C. Hunley, MC USN
Commanding Officer

23 March 1965

* This research was conducted under the sponsorship of the Office of Life Science Programs, National Aeronautics and Space Administration.

U.S. NAVAL SCHOOL OF AVIATION MEDICINE
U.S. NAVAL AVIATION MEDICAL CENTER
PENSACOLA, FLORIDA

SUMMARY PAGE

THE PROBLEM

As a means of better understanding the role of the vestibular organs in relation to ataxic responses to prolonged rotation, two contrasting groups of subjects were studied to: 1) determine quantitatively to what extent two visually-enhanced postural equilibrium test performances of labyrinthine defective subjects(L-D's) on a single rail of optimum difficulty become disturbed along the time axis of rotation (Experiment A), and 2) compare the performances of these L-D subjects with those of normal subjects in terms of postrotation effects as studied with a new standardized ataxia test battery (Experiment B).

FINDINGS

Rotation-induced ataxia was superimposed to an appreciable extent upon the previously present and characteristic vestibular ataxia in the L-D subjects (Exp. A), and upon cessation of rotation (Exp. B), there were significant decrements on all Test Battery performances of the normal group, whereas in the L-D group significant decrements were observed only on the two visually-enhanced tests. Other findings, which were considered tentative, are discussed in terms of several unresolved methodological problems in such experiments.

ACKNOWLEDGMENTS

Gratitude is expressed to Mr. Theron L. Trimble, AN William F. DeWare, Jr., and Ensign Charles L. Ham, MC USNR, for their assistance; to LT Robert J. Wherry, Jr., MSC, USN, for his statistical counsel; and to the auricular-involved subjects and those subjects from the U. S. Naval Academy who served conscientiously as subjects.

INTRODUCTION

That postural difficulties occur in the Pensacola Slow Rotation Room (1,4,5,9,10,14) and other rotating environments (21-23) is well documented. They are a direct result of the gyroscopic torques and changing G forces which occur as one moves his head and body relative to these rotating platforms. There is evidence that postural performances improve with massed* exposure (9) and that this improvement is related to vestibular adaptation as indicated by a similar reduction in: 1)nystagmus (11-13), 2) the Coriolis Illusion(9-17), and 3) vestibular sickness symptomatology (1,3-5,7-9,15,17). Upon the cessation of rotation, which was sufficient in duration to permit such adaptation, subjects have experienced postadaptation effects which were characterized by: 1) a reversal in the direction of the Coriolis illusion (4,7,9,17), 2) nystagmus of opposite sense (10,11), 3) slight vestibular sickness symptomatology(1,4,9,17), and 4) pronounced postural disequilibrium (1,4,5,9,14,17). With the possible exception of the postural difficulties, these changes were less pronounced upon cessation of rotation than during the onset period (immediately to some forty-eight hours following) of rotation.

The opportunity to throw more light on the contributions of the vestibular apparatus to adaptation and postadaptation processes was occasioned by a larger study (4) which involved two separate runs of equal duration on the new Pensacola Slow Rotation Room (Coriolis Acceleration Platform, CAP , otherwise referred to as SRR II). In the first, four vestibular (labyrinthine) normal subjects were exposed to constant rotation for twelve days at a speed of 10 RPM and in the second, four labyrinthine defective (L-D)subjects were similarly exposed.

Our purpose was two-fold: 1) to determine quantitatively to what extent the postural equilibrium test performances of L-D subjects on a single rail of optimum difficulty become disturbed at the onset of rotation, during rotation, and upon cessation of rotation (Experiment A); and 2) to compare the L-D subjects with normal subjects in terms of effects of cessation of rotation upon postural equilibrium performances as studied by means of a new standardized ataxia test battery (6) (Experiment B). Advantages which attend the utilization of the standardized Test Battery (Short Version) include the comparability of varying rotation effects (1,3-5,9,14,22) with a wide range of other novel experimental conditions and influences upon postural performances (6,24) within and between auricular normals and within auricular involved individuals.

APPARATUS AND METHOD

SUBJECTS

The eight subjects of this investigation are described in detail elsewhere (4). The four normal subjects ranged in age from 22-25 years and were recent graduates of the Naval Academy awaiting assignment as student aviators. They presented evidence of

---

*Casual observation of the performances of the various experimenters who have long been involved in these studies indicates that improvement occurs with distributed exposure as well.

normal functioning labyrinths as indicated by nonsignificant histories of auricular difficulties; normal responses to counterrolling (20), to threshold caloric testing (19), and audiometric evaluation; and their initial postural equilibrium test performances were average, or better.

The four L-D subjects were 27,28,33, and 51 years in age and are part of a larger group of L-D's who have participated regularly in the vestibular research program of this laboratory (2,3,5,6,8,16,20). In the main, labyrinthine function was absent or unlikely in these subjects. A complete description of all of the clinical findings appears in a separate report (4).

CORIOLIS ACCELERATION PLATFORM (CAP)

This is a circular, windowless room driven by an electric torque motor. It is 20 feet in diameter and capable of accommodating six to ten subjects for periods of two weeks and longer (4).

During each twelve-day rotation period two or three stops for supplies were necessary each day. The subjects immobilized their heads during these stops in order to preserve their adaptation (1,4,9,17).

POSTURAL EQUILIBRIUM TESTS

Experiment A

The apparatus consisted simply of a wooden rail 3 inches wide and 80 inches long selected from a prestandardized version of a new quantitative ataxia test battery (6). Selection of this particular rail was based on several years' experience in testing and retesting on as many as ten daily occasions a number of L-D (these men included) and normal subjects alike on several rails of varying widths under static conditions (6), as well as the testing of several other normal subjects exposed briefly to varying RPM's (2-10 RPM in 2 RPM step-increases) in the Pensacola SRR I.* Thus this rail was well-known to be the narrowest on which most of these L-D subjects (with the exception of HA) attained, with practice, maximum success, i.e., perfect scores.

Two tests were performed on the 3" wide rail (shoes were not removed):

Walking Test. With eyes open, subjects were required to take five heel-to-toe steps (in addition to the first two steps which were not scored) in an arms-folded-against-chest, and body erect position. The best two out of three trials constituted the scoring method. If the criterion of 5 (steps) was not met on either of two trials, a third trial was given. A perfect, or maximum, score consisted of 10 (steps).

---

*Fregly, A. R., Unpublished data, 1961-1962.

Standing Test. With eyes open, while in the same stringent feet heel-to-toe, arms-folded-against-chest, and body erect position, subjects stood on the rail, for a maximum period of 60 seconds per trial. The best two out of three trials were summed for a total score. A perfect score consisted of 120 (seconds).

To investigate the possibility that postural disturbances might be related to varied positions in the room, both the Walking and Standing tests were performed: 1) radially inward from the periphery, 2) radially inward across center, and 3) chord-wise against rotation.

Experiment B

The standardized Test Battery (Short Version)* was administered. The apparatus, administration, and scoring procedures are described fully in the Appendix.

Shoes were not removed for the test series. During both the pre-and postrotation periods all subjects undertook each of the three distinct postural tests comprising the Test Battery in the following sequence: 1) Walking with eyes open on a 3/4" wide rail (Walk H/T Test), 2) Standing with eyes open on the 3/4" wide rail (Stand E/O Test), and 3) Standing with eyes closed on a 2-1/4" wide rail (Stand E/C Test). (See Figures in the Appendix.)

RESULTS

EXPERIMENT A

Test performance differences as a function of varied positions of the rail in the room and the direction of the subjects relative to the center of rotation (radially inward from the periphery, radially inward across center, and chord-wise against rotation) were not statistically significant at an acceptable level#, and thus all scores were summed and averaged to indicate general Walking and Standing test performance levels along the time axis. The individual results so obtained are shown in Figure 1 (Walking Test) and in Figure 2 (Standing Test).

- - - - - - - - - - -

*A Long Version, which employs six rails of varying widths, from which the Short Version evolved, was designed for similar usage and was described fully with the Short Version in a previous publication (6).

#The tests were administered in the order of mention above. Best to poorest performances were, in most cases, found to be in the reverse order and undoubtedly reflected uncontrolled-for order effects.

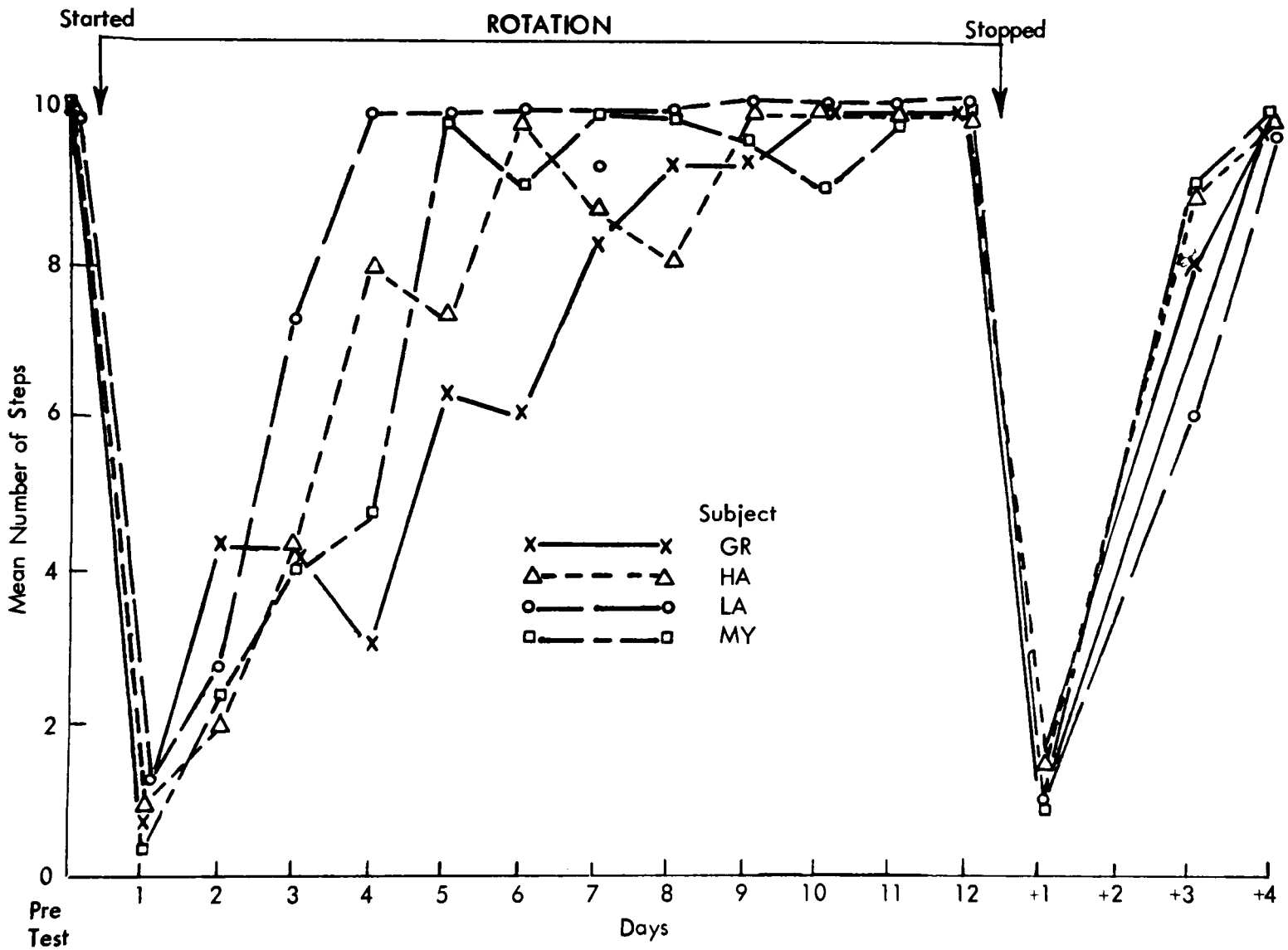

Figure 1
Individual Walking Test Performances of Four L-D Subjects on a 3-inch Wide Rail Along the Time Axis of Rotation

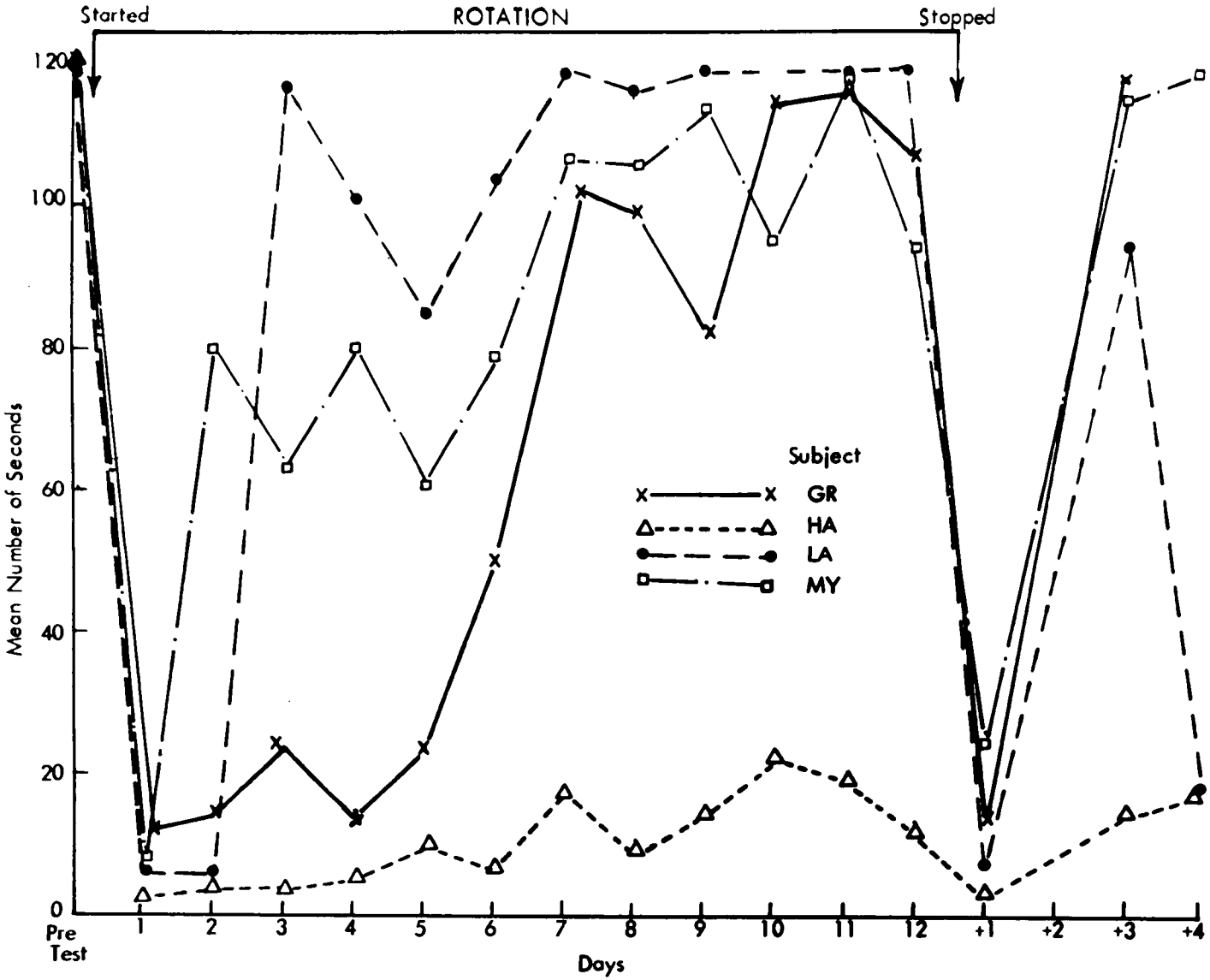

Figure 2
Individual Standing Test Performances of Four L.-D Subjects on a 3-inch Wide Rail Along the Time Axis of Rotation

The Walking performances of the L-D's were interrupted considerably both at the onset and at the cessation of rotation, and improvement (adaptation) perrotation was markedly delayed. The individual variance was small, which suggests a generalized perrotation effect upon this particular performance. Perfect scores were attained intermittently from the fourth day of rotation onward, and by the eleventh to twelfth day all four L-D subjects attained perfect scores. On the first day postrotation their performances declined to about the same levels as were observed at onset of rotation, and three days later the performances recovered to baseline levels.

Inter-subject variability of the Standing test performances of these subjects (Figure 2) was somewhat greater than that found for the Walking test. Three L-D subjects recovered their prerotation levels of performance by the seventh to eleventh day perrotation, and the remaining L-D (HA) never regained his previous perfect score. All four demonstrated a marked decrement in performance immediately upon cessation of rotation. Two subjects (GR and MY) regained their prerotation levels within three and four days postrotation, respectively. The remaining two had not yet recovered to their prerotation levels within 72 hours postrotation (Day+4).

Generally, the L-D group met the challenge of recovering their Walking and Standing test performances during rotation and shortly following cessation of rotation amidst appreciable decrements incurred both at the onset and at the cessation of the prolonged rotation. Both during and following rotation, group recovery of Standing performance was more delayed than the recovery of Walking performance, whereas both the perrotation and immediate postrotation effects in this group were greater in terms of Walking test performance than in terms of Standing test performance.

EXPERIMENT B

Normal Subjects

The variance calculated for each of the three postural equilibrium test performances of this group of four subjects did not differ significantly (by F Test) from the variance of a normative sample of 340 males in the age range of 17-42, and the individual scores on each of the tests fell well within the average range of the normative sample. Accordingly, group mean performance differences from the normative group lacked statistical significance (by t test) and, to this extent, the subjects of this experiment were considered to be representative.

The tests comprising the Test Battery were not equated as to difficulty; so, a strict assessment of the differential sensitivity of the tests to the prolonged rotation was not possible. But because each subject acted as his own control, between- and within-subject comparisons were made (Table I). Also, the data were grouped to determine rotational effects upon postural equilibrium in terms of averages (Table II).

Table I

Pre- and Postrotation Test Battery (Short Version) Scores of Four Normal Male Subjects Rotated Twelve Days at 10 RPM in the SRR II

Test Periods	Walk H/T				Stand E/O				Stand E/C			
	BO	EV	LU	SP	BO	EV	LU	SP	BO	EV	LU	SP
Pre- (Baseline)	14	15	9	13	42	98	27	36	122	168	44	180
Post-I (Immediate)	4	0	7	3	10	11	15	36	11	17	11	15
Post-II (24 hrs.)	10	9	8	6	14	20	13	24	23	21	33	11
Post-III (48 hrs.)	10	11	15	10	26	44	24	32	95	63	64	32
Post-IV (72 hrs.)	15*	13	14	15	15	13	29	21	180	129	108	51
Post-V (96 hrs.)	15	6	15	12	13	18	40	27	180	120	91	97

* Underlined scores represent recovery, or virtual recovery, to prerotation performance levels.

Table II

Mean Differences Between Pre- and Postrotation Test Battery (Short Version) Performance Scores in a Group of Four Normal Male Subjects Rotated Twelve Days at 10 RPM in the SRR II

Test Battery (Short Version)	Pre- & Post-I	Pre- & Post-II	Pre- & Post-III	Pre- & Post-IV	Pre- & Post-V
Walk H/T	- 9.3**	- 4.6*	- 1.3	+ 1.5	- 0.8
Stand E/O	- 32.8**	- 33.1**	-19.3	-31.3*	-26.3
Stand E/C	-114.0**	-106.5**	-65.0	-11.5	- 6.5

*P .04, by U test
** P .02

The individual prerotation and the serial postrotation performance scores are shown in Table I. For convenience the test periods are identified as: prerotation (baseline); post-I (immediately after rotation), post-II (24 hours after rotation), post-III (48 hours after rotation), and post-IV (72 hours after rotation). Three of the subjects (SP excepted) recovered to their baseline performance levels between 24 hours and 72 hours following cessation of rotation. Generally, in these three subjects, recoverability of Walk H/T (Walking with eyes open on the 3/4" wide rail) performance was delayed longest (72 hours), which is a finding of interest inasmuch as the Walk H/T Test typically (in normal environments) has been found to be less difficult than the Stand E/O (Standing with eyes open on the 3/4" wide rail) and Stand E/C (Standing with eyes closed on the 2-1/4" wide rail tests)(6). The fourth subject (SP) recovered his Walk H/T and Stand E/O performances somewhat sooner (24 hours, and immediately, respectively), whereas his Stand E/C Test performance fell short of recovery even as late as 96 hours postrotation. This subject's prolonged recoverability of Stand E/C performance is analagous to the finding of incomplete recovery at 72 hours postrotation reported for three of the four subjects in a previous experiment (9) who rotated at 10 RPM for twelve days in the Pensacola SRR I.

As a group, recovery, or virtual recovery, of all Test Battery (Short Version) performances from the standpoint of statistical significance (Table II) was evidenced within forty-eight hours postrotation (post-III period). Recovery of all (except Stand E/O) test performances progressed through the post-V period. The mean "regression" of Stand E/O performance observed in the post-IV and post-V periods is a result of the inclusion of the scores of two subjects whose motivation appeared less than optimum during these particular test periods.

Labyrinthine Defective Subjects

As with the normals, comparisons were made within and between subjects (Table III), and also the data were grouped to determine the rotation effects upon postural equilibrium in this highly select group in terms of averages (Table IV).

It should be noted that the baseline (prerotation) scores of the L-D's on each of the tests fell in a range appreciably below that of the four normal subjects, and that, in comparison with the normative samples, their scores fell at the 1st percentile level. Yet, even in this relatively very low scoring group, the immediate postrotation performances generally fell below prerotation performance levels. All four L-D subjects performed below their prerotation levels on the Stand E/O Test; three of them recovered within twenty-four hours; the fourth subject recovered within forty-eight hours. Three of the L-D's (GR excepted) were similarly affected on the Walk H/T Test, whereas only two (HA and LA) were similarly affected on the Stand E/C Test. Thus, on an individual basis, Walk H/T and Stand E/O performances were most affected (about equally) and Stand E/C performance was least affected by the rotation.

The L-D subjects, as a group, showed (Table IV) from a statistically significant standpoint, more distinct hierarchical postural equilibrium functioning (ataxic) effects of the rotation than were shown on an individual basis. Walk H/T performance was most affected (recovered within 48 hours), Stand E/O performance was second most affected (recovered within 24 hours), and Stand E/C performance was least (not in the least) affected by the rotation.

The individual and mean score* comparisons of the normal group with the L-D group in terms of recoverability of postural equilibrium functioning to prerotation levels following the equivalent, prolonged rotation are summarized in Table V, and may be stated as follows:

a) Walk H/T Test - On an individual basis, time for recovery ranged from 24-72 hours in the normals and from 0 -48 hours, or somewhat earlier, in the L-D's. In terms of averages, both groups recovered at about the same time, or within 48 hours of cessation of rotation. Generally, the L-D subjects recovered their Walk H/T performances slightly sooner than did the normal subjects.

b) Stand E/O Test - On an individual basis, time for recovery ranged from 0-48 hours in the normal subjects and from 24-48 hours in the L-D's. In terms of averages, the normal group recovered within 48 hours, whereas the L-D group recovered a day earlier, or within 24 hours.

- - - - - - - - - -

*Mean scores refer here to within-group mean differences between pre- and postrotation performances.

Table III

Pre- and Postrotation Test Battery (Short Version) Scores of Four L-D Subjects Rotated Twelve Days at 10 RPM in the SRR II

Test Periods	Walk H/T				Stand E/O				Stand E/C			
	GR	HA	LA	MY	GR	HA	LA	MY	GR	HA	LA	MY
Pre- (Baseline)	6	5	6	7	13	6	8	8	7	6	10	8
Post-I (Immediate)	5*	3	4	3	5	4	4	6	9	4	7	8
Post-II (24 hrs.)	3	4	5	5	10	4	7	7	7	10	5	7
Post-III (48 hrs.)	9	7	3	6	6	7	6	8	7	9	10	8
Post-IV (72 hrs.)	7	6	4	5	7	4	6	6	10	6	7	7

*Underlined scores represent recovery, or virtual recovery to prerotation performance levels.

Table IV

Mean Differences Between Pre- and Postrotation Test Battery (Short Version) Performance Scores in a Group of Four L-D Subjects Rotated Twelve Days at 10 RPM in the SRR II

Test Battery (Short Version)	Pre- & Post-I	Pre- & Post-II	Pre- & Post-III	Pre- & Post-IV
Walk H/T	-2.2*	-1.7*	+0.3	-0.5
Stand E/O	-4.0*	-1.8	-2.0	-3.0
Stand E/C	-0.8	-0.5	+0.7	-0.3

*P .08, by U test (2-tailed)

Table V

Comparison of Normals with L-D's in Recovery, from Rotation, of Test Battery (Short Version) Performances

	Recovery Time			
Test Battery	Four Normals		Four L-D's	
(Short Version)	Mean	Range	Mean	Range
Walk H/T	48 hrs.	24 hrs. - 72 hrs.	48 hrs.	0 hrs. - 48 hrs.
Stand E/O	48 hrs.	0 hrs. - 48 hrs.	24 hrs.	24 hrs. - 48 hrs.
Stand E/C	48 hrs.	48 hrs. - > 96 hrs.	0 hrs.	0 hrs. - 48 hrs.

c) Stand E/C Test - On an individual basis, time for recovery ranged from 48 hours to beyond 96 hours in the normals, and from 0-48 hours in the L-D's. In terms of averages, the normal group recovered within 48 hours, whereas the L-D group recovered immediately, or some 48 hours sooner than did the normal group.

Generally, the normals, as a group, showed no statistically significant hierarchical postural equilibrium performance test effects; i.e., the group performances on the Test Battery (Short Version) recovered uniformly within 48 hours. In contrast, the L-D subjects as a group did show nearly statistically significant hierarchical postural equilibrium functioning (ataxic) effects; i.e., recovery took place within forty-eight hours on the Walk H/T Test, within twenty-four hours on the Stand E/O Test, and immediately on the Stand E/C Test.

DISCUSSION

Insofar as the Walking and Standing tests employed in Experiment A served as an "index" of visually-enhanced postural equilibrium functioning, the first aim of this inquiry was fulfilled. Substantial decrements in postural equilibrium functioning so defined were observed in four L-D subjects following the onset and cessation of rotation, and the recovery of this functioning during continuous rotation was delayed appreciably, while postrotation recovery occurred more rapidly.

To the extent that these L-D subjects are presumed to be lacking in vestibular functioning*, this finding provokes the suggestion that the bizarre stimulation encountered in the rotating environment produced an ataxia of nonvestibular origin and aggravated, probably via proprioceptive mechanisms primarily, the characteristic adventitiously produced vestibular ataxia previously present in these individuals. However, in addition to the problem of defining "complete" vestibular loss, the major methodological difficulty of differentiating vestibular ataxia from other forms of ataxia by means of prevailing postural equilibrium (or ataxia) test procedures begs the question of whether or not the vestibular apparatus may indeed be considered nonessential for the ataxia generated by the rotation.

Implication of the vestibular apparatus as the source of differential sensitivity to prolonged rotation was suggested less equivocally by the findings in these L-D subjects that, compared to vestibular intact individuals, they were free of motion sickness symptomatology (5,8,16) and biochemical changes (4,18). Nevertheless, while present results demonstrate clearly that these L-D subjects who were ataxic# to begin with were made even more so by physical forces peculiar to rotating platforms acting on the body, they do not necessarily indicate, but merely suggest, that the vestibular apparatus is nonessential for the rotation-generated ataxia observed.

Experiment A would have been more complete if: 1)standing with eyes closed performances had been studied for comparisons with the two visually-enhanced performances, and 2) a rail of equivalent difficulty (1-1/4 inches wide) for normals had been used with the four normal subjects for comparison of results with the L-D group. With such an approach it would be of considerable interest to compare L-D subjects with normals in terms of: 1) the onset of rotation effects, 2) rates of adaptation to rotation, 3) immediate postrotation effects, and 4) postrotation rates of recoverability.

The comparison of the L-D's with the normals in terms of at least two of these effects along the time axis, viz., immediate postrotation effects and postrotation recoverability, was accomplished to some extent in Experiment B.

In Experiment B the Walk H/T and Stand E/O performances of the L-D group immediately following the cessation of rotation showed significant decrements from prerotation performance levels, which was a finding in parallel with the findings in Experiment A. The relative differences between the two experiments in the magnitude of the decrements shown could not be strictly compared, however, because of major apparatus differences (3" wide rail in Exp. A versus 3/4" wide rail in Exp. B) and, thereby, differences in the levels of performance difficulty. Utilization of the Test Battery (Short Version)

---

*In the absence, as yet, of definitive vestibular functional tests, "complete losses" may only be presumed.

#Ataxia is defined here only in terms of the relatively poor performance levels of L-D's compared to the considerably higher levels of performances characteristic of vestibular normal individuals on the particular tests utilized.

during rotation as well as following rotation in future experiments would enable within-group comparability of magnitude effects and should prove interesting for relating to effects at other crucial periods along the time axis of rotation. Such procedure, moreover, would enable the determination of whether the same or a different hierarchical ataxic effect would be observed perrotation as was observed postrotation in the present study.

The comparative findings (between groups) in Experiment B of 1) more delayed recovery of performances in the normal subjects than in the L-D's, and 2) immediate postrotation recovery of Stand E/C performance in the L-D group amidst the generally more delayed recovery of this performance in the normals are findings which may well be more apparent than real inasmuch as the Test Battery (Short Version) apparatus did not permit equating the two groups in their markedly different performance capabilities; i.e., the tasks performed on the 2-1/4" wide rail and the 3/4" wide rail were much more difficult for the L-D's than for the normals. Strict comparisons of groups as unequal in performance capabilities as the present groups would perforce require careful selection of rails of appropriate widths within each group.

To what extent the findings in this investigation reflected subtle, but important, motivational influences is not known, and because results are based on such a small number of individuals, all interpretations must be considered as being highly tentative, and therefore generalization to other populations requires utmost caution.

REFERENCES

1. Bergstedt, M., Kennedy, R. S., Graybiel, A., and French, R. S., Studies in adaptation during graduated increases in angular velocity up to 10 RPM in a rotating environment. In preparation.

2. Colehour, J. K., Stress measurements in normal and labyrinthine defective subjects in unusual G force environments. Presented at NASA sponsored Symposium on the Role of the Vestibular Organs in the Exploration of Space. Pensacola, Florida, 20-22 January 1965.

3. Graybiel, A., Symptomatology during exposure to a constantly rotating environment: Some theoretical and practical implications. Proc. AGARD-Aerospace Medical Panel Meetings, Lisbon, 1961.

4. Graybiel, A., et al., Comparative effects of exposure to a rotating environment (10 RPM) on four vestibular normal and four labyrinth defective subjects for a period of twelve days. In preparation.

5. Graybiel, A., Clark, B., and Zarriello, J. J., Observations on human subjects living in a "Slow Rotation Room" for periods of two days. Arch. Neurol., 3: 55-73, 1960.

6. Graybiel, A., and Fregly, A. R., A new quantitative ataxia test battery. NSAM-919. NASA Order No. R-93. Pensacola, Fla.: Naval School of Aviation Medicine, 1965.

7. Graybiel, A., Guedry, F. E., Jr., Johnson, W., and Kennedy, R. S., Adaptation to bizarre stimulation of the semicircular canals as indicated by the oculogyral illusion. Aerospace Med., 32:321-327, 1961.

8. Graybiel, A., and Johnson, W. H., A comparison of the symptomatology experienced by healthy persons with loss of labyrinthine function when exposed to unusual patterns of centripetal force in a counter-rotating room. Ann. Otol., 72:357-373, 1963.

9. Graybiel, A., et al., The effect of exposure to a rotating environment (10 RPM) on four aviators for a period of twelve days. NSAM-923. NASA Order No. R-93. Pensacola, Fla.: Naval School of Aviation Medicine, 1965.

10. Guedry, F. E., Jr., Comparison of vestibular effects in several rotating environments. Presented at NASA sponsored Symposium on The Role of the Vestibular Organs in the Exploration of Space. Pensacola, Florida, 20-22 January 1965.

11. Guedry, F. E., Jr., and Graybiel, A., Compensatory nystagmus conditioned during adaptation to living in a rotating room. J. appl. Physiol., 17:398-404, 1962.

12. Guedry, F. E., Collins, W. E., and Graybiel, A., Vestibular habituation during repetitive complex stimulation: A study of transfer effects. J. appl. Physiol., 19:1005-1015, 1964.

13. Guedry, F. E., Jr., Graybiel, A., and Collins, W. E., Reduction of nystagmus and disorientation in human subjects. Aerospace Med., 33:1356-1360, 1962.

14. Guedry, F. E., Jr., Kennedy, R. S., Harris, C. S., and Graybiel, A., Human performance during two weeks in a room rotating at three RPM. Aerospace Med., 35:1071-1082, 1964.

15. Kennedy, R. S., and Graybiel, A., Validity of tests of canal sickness in predicting susceptibility to air sickness and sea sickness. Aerospace Med., 33:935-938, 1962.

16. Kennedy, R. S., Graybiel, A., McDonough, R. C., and Beckwith, F. D. Symptomatology under storm conditions in the North Atlantic in control subjects and in persons with bilateral labyrinthine defects. Presented at 36th Annual Meeting, Aerospace Medical Association, New York, April 26-29, 1965.

17. Kennedy, R. S., Tolhurst, G. C., and Graybiel, A., The effects of visual deprivation on adaptation to a rotating environment. NSAM-918. NASA Order No.R-93. Pensacola, Fla.: Naval School of Aviation Medicine, 1965.

18. Knoblock, E. C., Biochemical effects of vestibular stimulation. Presented at NASA sponsored Symposium on The Role of the Vestibular Organs in the Exploration of Space. Pensacola, Florida, 20-22 January 1965.

19. McLeod, M. E., and Meek, J. C., A threshold caloric test: Results in normal subjects. NSAM-834. NASA Order No. R-47. Pensacola, Fla.: Naval School of Aviation Medicine, 1962.

20. Miller, E. F., II, and Graybiel, A., A comparison of ocular counterrolling movements between normal persons and deaf subjects with bilateral labyrinthine defects. Ann. Otol., 72:885-893, 1963.

21. Newsom, B. D., and Brady, J. F., Observations on subjects exposed to prolonged rotation in a space station simulator. Presented at NASA sponsored Symposium on The Role of the Vestibular Organs in the Exploration of Space. Pensacola, Florida, 20-22 January 1965.

22. Newsom, B. D., Brady, J. F., and Goble, G. J., Equilibrium and walking changes observed at 7-1/2, 10, and 12 RPM on the Revolving Space Station Simulator(General Dynamics Corp., San Diego, Calif.). Presented at 35th Annual Meeting, Aerospace Medical Association, Miami Beach, Florida, May 11-14, 1964.

23. Stone, R. W., and Letko, W., Some observations on the stimulation of the vestibular system of man in a rotating environment. Presented at NASA sponsored Symposium on The Role of the Vestibular Organs in the Exploration of Space. Pensacola, Florida, 20-22 January 1965.

24. Wood, C. D., Graybiel, A., McDonough, R. C., and Kennedy, R. S., Evaluation of some antimotion sickness drugs on the Slow Rotation Room (No. 1). NSAM-922. NASA Order No. R-93. Pensacola, Fla.: Naval School of Aviation Medicine, 1965.

APPENDIX A

APPENDIX A

Test Battery (Short Version)

Apparatus*

Walk H/T and Stand E/O rail: metal construction, 8 feet long, 3/4 inches wide, 1-1/2 inches high above the base (3/4" high and 5" wide), and sand-blasted top surface. (See Figure A 1.)

Stand E/C rail: wood construction, 30 inches long, 2-1/4 inches wide, and one inch above its base (3/4" high and 5" wide) on which it was superimposed (see Figure A 1).

Method

Shoes were not removed for the test series. Testing procedures included a combination of verbal instructions and the following Instruction Sheet, which all subjects were required to read prior to initial testing:

Test Battery (Short Version)

Instruction Sheet

Test Sequence:

a. Walking with eyes open on a 3/4" wide rail
b. Standing with eyes open on a 3/4" wide rail
c. Standing with eyes closed on a 2-1/4" wide rail

Body Position for All Tests:

a. Body erect or nearly erect
b. Arms folded against chest
c. Feet in heel-to-toe position
d. Feet tandemly aligned

Scoring:

a. Walk H/T Test - The first two steps, which are necessary for positioning on the rail, are not scored. A trial begins when the third step is taken.
b. Stand E/O Test - Timing begins as soon as correct position on the rail is assumed.
c. Stand E/C Test - You may take unlimited time for positioning yourself on the rail first with your eyes open. Timing will begin as soon as you close your eyes. Examiner will observe your eyes carefully, so that signalling the examiner is unnecessary.

---

*A light-weight, foldable, portable metal rail unit (equivalent in all respects) was utilized for the postrotation testing (Figure A 2).

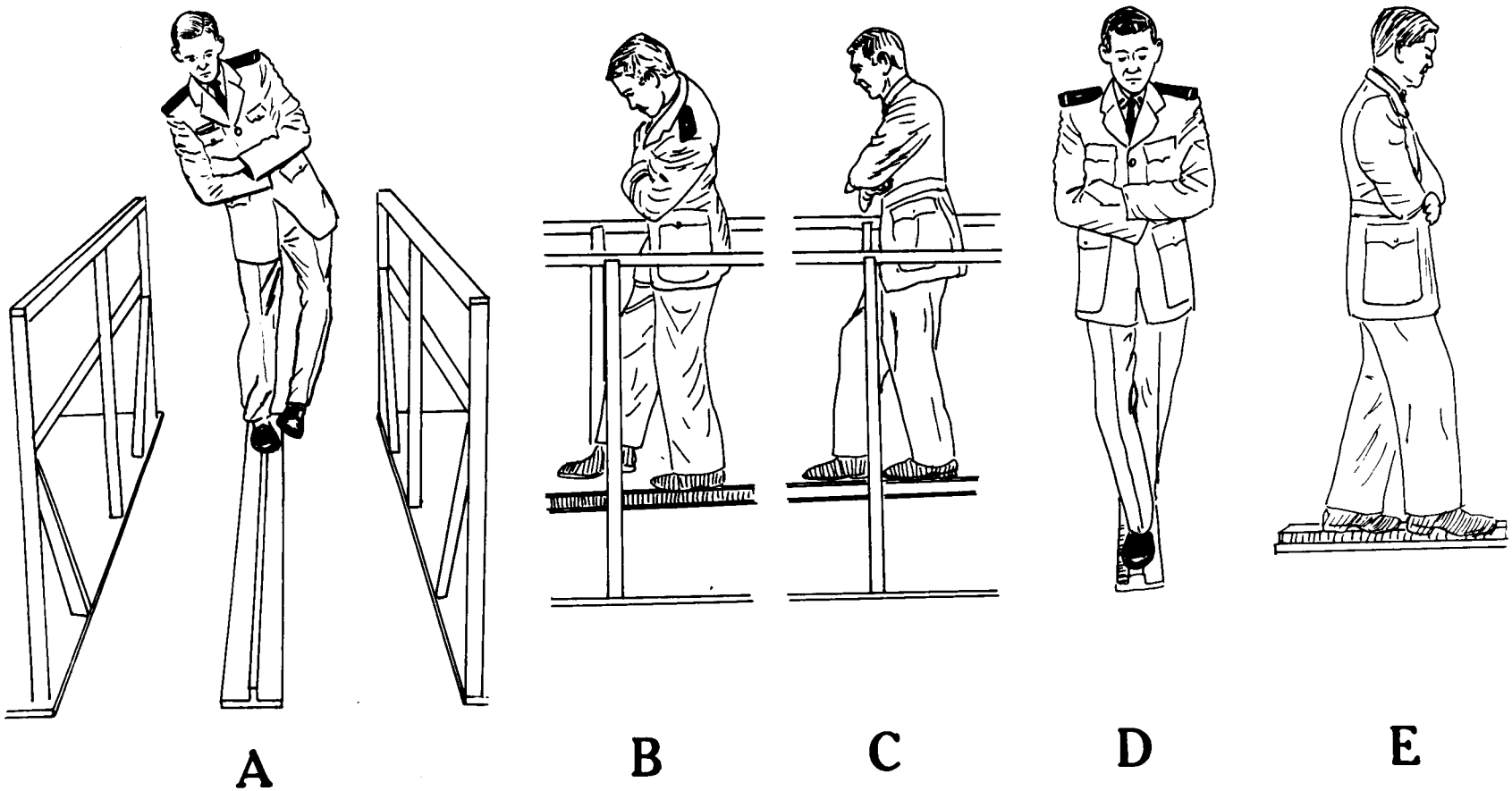

Figure A 1
Test Battery (Short Version); A-B) Walking with eyes open on a 3/4-inch wide rail (Walk H/T Test); C) Standing with eyes open on the 3/4-inch wide rail (Stand E/O Test); D-E) Standing with eyes closed on a 2-1/4-inch wide rail (Stand E/C Test).

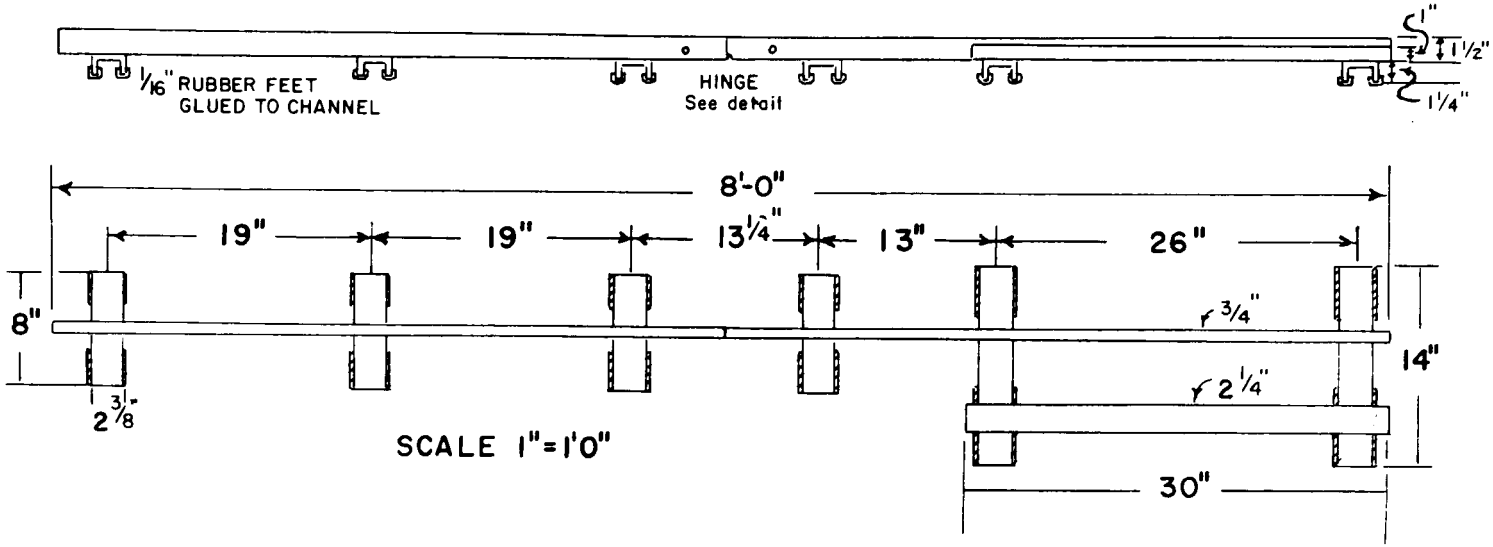

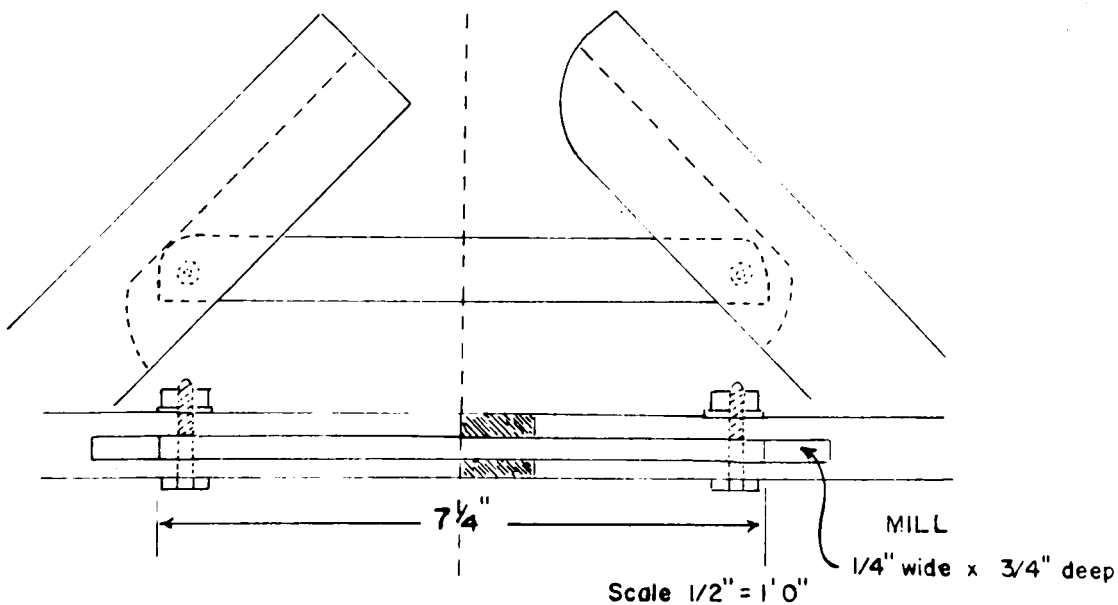

HINGE DETAIL

Figure A2

Portable Metal Rail Unit, Specific to the Test Battery (Short Version)

General:

As there does not appear to be any single "best method," you must develop (rapidly) your own techniques. You may position your head up or down and/or forward or backward; you may lean forward or backward slightly if you do not prefer a perfectly erect position; between trials, alternation of the feet is permissible; you may place more weight on your front foot than on your rear foot or vice versa, or you may distribute your weight equally. However, a stooping position should be avoided.

After the subject read instructions the examiner demonstrated all procedures and answered all questions raised about the performance procedures. Examiner gave two or three demonstrations of walking the 3/4" wide rail, and one or two demonstrations of standing on each of the two rails.* The scoring procedures were as follows:

Scoring Procedures

Walk H/T Test

a. Each correct step is scored as one (step)
b. Maximum trial score equals five (steps)
c. Maximum test score equals fifteen (steps), the sum of the three best trials.

Stand E/O Test

a. Timing, to the nearest second, begins when subject assumes correct and balanced position on the rail, and timing ends at 60 seconds, or when subject violates his position or falls off the rail.
b. Maximum trial score equals 60 (seconds).
c. Maximum test score equals 180 (seconds), the sum of the three best trials.

Stand E/C/ Test

a. Timing begins as soon as positioned subject closes his eyes, and timing ends at 60 seconds or when subject violates his position, or opens his eyes, or falls off the rail.
b. Maximum trial score equals 60 (seconds).
c. Maximum test score equals 180 (seconds), the sum of the three best trials.

---

*Examiner(s) need to exercise utmost safety precaution against possible injury to subjects from possible inadvertent falling off of rail(s). Note safety feature of testing situation illustrated in A-C of Figure A 1.

Security Classification UNCLASSIFIED

DOCUMENT CONTROL DATA - R&D

(Security classification of title, body of abstract and indexing annotation must be entered when the overall report is classified)

1. ORIGINATING ACTIVITY *(Corporate author)*
U.S. Naval School of Aviation Medicine
Pensacola, Florida

2a. REPORT SECURITY CLASSIFICATION
UNCLASSIFIED

2b. GROUP

3. REPORT TITLE
Comparative Effects of Prolonged Rotation at 10 RPM on Postural Equilibrium in Vestibular Normal and Vestibular Defective Subjects

4. DESCRIPTIVE NOTES *(Type of report and inclusive dates)*

5. AUTHOR(S) *(Last name, first name, initial)*
Fregly, Alfred R. and Kennedy, Robert S.

6. REPORT DATE
23 March 1965

7a. TOTAL NO. OF PAGES
24

7b. NO. OF REFS
24

8a. CONTRACT OR GRANT NO.
NASA Order No. R-93

b. PROJECT NO.
MR005.13-6001 Subtask 1

c.

d.

9a. ORIGINATOR'S REPORT NUMBER(S)
NSAM-920

9b. OTHER REPORT NO(S) *(Any other numbers that may be assigned this report)*
108

10. AVAILABILITY/LIMITATION NOTICES
Copies of this report can be obtained from Commanding Officer, U. S. Naval School of Aviation Medicine, or from DDC.

11. SUPPLEMENTARY NOTES

12. SPONSORING MILITARY ACTIVITY

13. ABSTRACT

28350

As a means of better understanding the role of the vestibular organs in relation to ataxic responses to prolonged rotation, two contrasting groups of subjects were studied to: 1)determine quantitatively to what extent two visually-enhanced postural equilibrium test performances of labyrinthine defective subjects (L-D's) on a single rail of optimum difficulty become disturbed along the time axis of rotation (Experiment A), and 2) compare the performances of L-D's with normals in terms of postrotation effects as studied with a new standardized ataxia test battery (Experiment B).

Rotation-induced ataxia was superimposed to an appreciable extent upon the previously present and characteristic vestibular ataxia in the L-D's (Exp. A), and (in Exp. B), upon cessation, there were significant decrements on all Test Battery performances of the normal group, whereas in the L-D group significant decrements were observed only on the two visually-enhanced tests. Other findings, which were considered tentative, are discussed in terms of several unresolved methodological problems in such experiments. Author

DD FORM 1 JAN 64 1473

UNCLASSIFIED
Security Classification

Security Classification UNCLASSIFIED

14. KEY WORDS	LINK A ROLE	LINK A WT	LINK B ROLE	LINK B WT	LINK C ROLE	LINK C WT
Postural equilibrium test performances						
Effects of prolonged rotation						
Tests of vestibular function						
Psychomotor functioning						
New standardized ataxia test battery						
Adaptation to rotation						

INSTRUCTIONS

1. ORIGINATING ACTIVITY: Enter the name and address of the contractor, subcontractor, grantee, Department of Defense activity or other organization *(corporate author)* issuing the report.

2*a*. REPORT SECURITY CLASSIFICATION: Enter the overall security classification of the report. Indicate whether "Restricted Data" is included. Marking is to be in accordance with appropriate security regulations.

2*b*. GROUP: Automatic downgrading is specified in DoD Directive 5200.10 and Armed Forces Industrial Manual. Enter the group number. Also, when applicable, show that optional markings have been used for Group 3 and Group 4 as authorized.

3. REPORT TITLE: Enter the complete report title in all capital letters. Titles in all cases should be unclassified. If a meaningful title cannot be selected without classification, show title classification in all capitals in parenthesis immediately following the title.

4. DESCRIPTIVE NOTES: If appropriate, enter the type of report, e.g., interim, progress, summary, annual, or final. Give the inclusive dates when a specific reporting period is covered.

5. AUTHOR(S): Enter the name(s) of author(s) as shown on or in the report. Enter last name, first name, middle initial. If military, show rank and branch of service. The name of the principal author is an absolute minimum requirement.

6. REPORT DATE: Enter the date of the report as day, month, year; or month, year. If more than one date appears on the report, use date of publication.

7*a*. TOTAL NUMBER OF PAGES: The total page count should follow normal pagination procedures, i.e., enter the number of pages containing information.

7*b*. NUMBER OF REFERENCES: Enter the total number of references cited in the report.

8*a*. CONTRACT OR GRANT NUMBER: If appropriate, enter the applicable number of the contract or grant under which the report was written.

8*b*, 8*c*, & 8*d*. PROJECT NUMBER: Enter the appropriate military department identification, such as project number, subproject number, system numbers, task number, etc.

9*a*. ORIGINATOR'S REPORT NUMBER(S): Enter the official report number by which the document will be identified and controlled by the originating activity. This number must be unique to this report.

9*b*. OTHER REPORT NUMBER(S): If the report has been assigned any other report numbers *(either by the originator or by the sponsor)*, also enter this number(s).

10. AVAILABILITY/LIMITATION NOTICES: Enter any limitations on further dissemination of the report, other than those imposed by security classification, using standard statements such as:

(1) "Qualified requesters may obtain copies of this report from DDC."

(2) "Foreign announcement and dissemination of this report by DDC is not authorized."

(3) "U. S. Government agencies may obtain copies of this report directly from DDC. Other qualified DDC users shall request through _____."

(4) "U. S. military agencies may obtain copies of this report directly from DDC. Other qualified users shall request through _____."

(5) "All distribution of this report is controlled. Qualified DDC users shall request through _____."

If the report has been furnished to the Office of Technical Services, Department of Commerce, for sale to the public, indicate this fact and enter the price, if known.

11. SUPPLEMENTARY NOTES: Use for additional explanatory notes.

12. SPONSORING MILITARY ACTIVITY: Enter the name of the departmental project office or laboratory sponsoring *(paying for)* the research and development. Include address.

13. ABSTRACT: Enter an abstract giving a brief and factual summary of the document indicative of the report, even though it may also appear elsewhere in the body of the technical report. If additional space is required, a continuation sheet shall be attached.

It is highly desirable that the abstract of classified reports be unclassified. Each paragraph of the abstract shall end with an indication of the military security classification of the information in the paragraph, represented as *(TS)*, *(S)*, *(C)*, or *(U)*.

There is no limitation on the length of the abstract. However, the suggested length is from 150 to 225 words.

14. KEY WORDS: Key words are technically meaningful terms or short phrases that characterize a report and may be used as index entries for cataloging the report. Key words must be selected so that no security classification is required. Identifiers, such as equipment model designation, trade name, military project code name, geographic location, may be used as key words but will be followed by an indication of technical context. The assignment of links, roles, and weights is optional.

UNCLASSIFIED

Security Classification