# Study of Physics of Failure and Reliability in Microelectronic Devices

3rd Quarterly Report

Period Feb. 15, 1965 to April 15, 1965

Contract NASW - 973

Prepared for: National Aeronautics and Space Administration
Electronic Research Center

Prepared by: Librascope Group
GENERAL PRECISION, INC.

15 May 1965

TABLE OF CONTENTS

1.0 Introduction

2.0 Summary

3.0 Data Review

4.0 Model Development

4.1 Further Conclusion on Failure Model

4.2 Equivalent Circuits

5.0 Verification Test

5.1 Test Program

5.2 Test Results

6.0 Failure Analysis

7.0 Effort for Next Quarter

Appendix A - Test Procedure

Appendix B - Test Data Sheets

Appendix C - Parameter Variation Data

## 1.0 INTRODUCTION

The effects of prolonged space environments on the parameters and life of solid state devices are generally not defined in terms of modes of failure and changes in rate of failure. The present study into the physics of failure of microelectronic devices is being undertaken to obtain results that will lead to better definition and specification of modes of failure and failure rate.

The basic objective of the program had been defined to:

(1) determine basic failure mechanisms and methods for detection through testing.

(2) develop failure mechanism models to predict the probability of occurrence and effects on parameters.

(3) perform stress tests to verify failure mechanisms postulated.

The program will ultimately lead to methods of predicting failure rates of long-life high reliability items through failure mechanism predictions. Furthermore, the study results will be essential in developing tests to screen out potentially weak devices after defining specific failure mechanisms as functions of stress level and material and process control. Finally, the present study will result in determining probable failure mechanisms for newly developed devices and materials and methods for their investigation.

## 2.0 SUMMARY

The major effort during the third quarter was directed toward initiating and performing the verification tests. A review of the results of previous study efforts indicated that the effectiveness of the test program could be enhanced by deleting the voltage step stress test and concentrate on the high temperature environments. The test program now consists of the following tests:

(a) Operating Life Test
(b) Temperature Step Stress Test
(c) Temperature Cycle Test.

Units from Vendors B and C have completed 250 hours of life test, Vendor A, 100 hours of life test. The 100 hours data

2.0 SUMMARY (Cont.)

showed no significant changes in parameters. Other data is still being evaluated. All units under Temperature stress test have completed the 250°C stress. The 200°C data indicated that one unit from Vendor A failed because leakage in one of the input diodes had increased in excess of ten times the initial value. This unit is now undergoing detailed failure analysis. The 250°C data is still being analyzed. The temperature cycle tests of 360 hours at Step 1 at -65°C to +125°C has been completed with no apparent variations in measurements.

The modeling effort has consisted of a review of the latest published information. Preliminary calculations of initial conditions necessary for the failure mechanisms to produce secondary breakdown and inversion layer channeling were made.

3.0 DATA REVIEW

Significant reports of work performed by Clevite-Shockley Labs and Motorola were received. Clevite-Shockley has been very active in research of surface phenomena. Their reported results are used in formulating the calculation in the modeling section.

Motorola was contacted about their work they have been doing in gold diffusion. The results of this contact are dicussed in the modeling section.

4.0 MODEL DEVELOPMENT

4.1 Further conclusions on Failure Model

A comparison between some of the reported studies on second breakdown (1,2) and the proposed testing parameters indicates that the current will have to be concentrated (through inhomogeneities etc.) by a factor of nearly 100 before second breakdown will occur. This can be seen from the discussion given in reference 1. The equations derived in section 3 of Part II of that work indicate that the threshold power for instability is proportional to the thermal conductance of that portion of the junction which carries most of the current. An effective junction area of 25 u and thickness .1 u gives a thermal conductance, for silicon, of about $10^{-2}$ watt/°K. This would require a threshold power, through this junction of about

4.0 MODEL DEVELOPMENT (Cont.)

4.1 Further Conclusions on Failure Model (Cont.)

.1 watt. If the current were concentrated in 1% of the junction area the thermal conductance would be decreased accordingly and the threshold power would be reduced to 1 milliwatt.

The information on ion migration produced inversion layer channeling (3.4) indicates that the ion contamination will have to be much larger than the present manufacturer's maximum before the back bias leakage current will be appreciably increased.

This can be seen from the discussion in references 3 and 4. It is shown there that the back bias leakage current, and general junction softening, are proportional to the percentage of water vapor in the device atmosphere. It is difficult to extrapolate these results to low water vapor and stray ion concentrations, but it appears that humidities below .001% will produce little effect over a period of several hundred hours. Ionizing radiation could increase ion contamination enough to produce noticeable effects.

The test program has not proceeded far enough to give definitive results on the gold diffusion and precipitation model, but we have been appraised of work done at Motorola which indicates that there might not be observable effects at 300°C or less. The experiment performed there consisted of subjecting devices to several hundred hours of storage at 500°C, and no new effects were found. There remains a possibility that this temperature is so large that the diffusion dominates the precipitation, and we may still find the precipitation effect at 300°C.

The reduced importance of inversion layer channeling as a failure mechanism in these circuits has led to modifying the test program as indicated in the next section. This change should render the total program more sensitive to the dominant mechanisms due to a larger statistical sample.

References

(1) Hans J. Queisser, "Failure Mechanisms in Silicon Semiconductors", ASTIA Document Service AD 297033.

(2) W. Schroen, W. W. Hooper, H. J. Queisser, "Failure Mechanisms in Silicon Semiconductors" ASTIA Document Service AD 601820.

4.0 MODEL DEVELOPMENT (Cont.)

4.1 Further Conclusions on Failure Model (Cont.)

References (Cont.)

(3) H. J. Queisser, W. Schroen, W. Hooper, "Failure Mechanisms in Silicon Semiconductors" ASTIA Document Service AD434762.

W. Shockley, H. J. Queisser and W. W. Hooper, "Phys. Rev. Letters" II, 489 (1963)

4.2 Equivalent Circuits

One error in the equivalent circuit of the device from Vendor A has been indicated by the initial data. The chip was to be connected to the external leads as shown in figure 1. From the initial parameter measurements, it is deduced that the devices were delivered as shown in figure 2.

The lateness of device delivery and the requirement of material lot traceability precluded return of these samples. The net effect on the program is that it is impractical to measure the current gain on that section of these devices.

5.0 VERIFICATION TEST

5.1 Test Program

The basic test plan has been described in detail in previous reports. Continuing studies have, however, indicated that the voltage step stress would not add significantly to the results of the temperature step stress and temperature cycling tests in actuating the expected mechanisms. It was determined that any state of temperature voltage inversion channeling could be "frozen" by reducing the temperature without removing the voltage. Based on these factors, the original test plan had been modified to make it more effective.

By eliminating the Voltage Step Stress Test, the sample size for the Operating Life Test and Temperature Step Stress Tests was increased. The temperature-voltage inversion layer channeling mechanism will be activated by the Temperature Cycling Test during which bias voltage will be maintained. The high temperature extremes of the Temperature Cycle Test were reduced from +350°C to +150°C because: (a) the high temperature

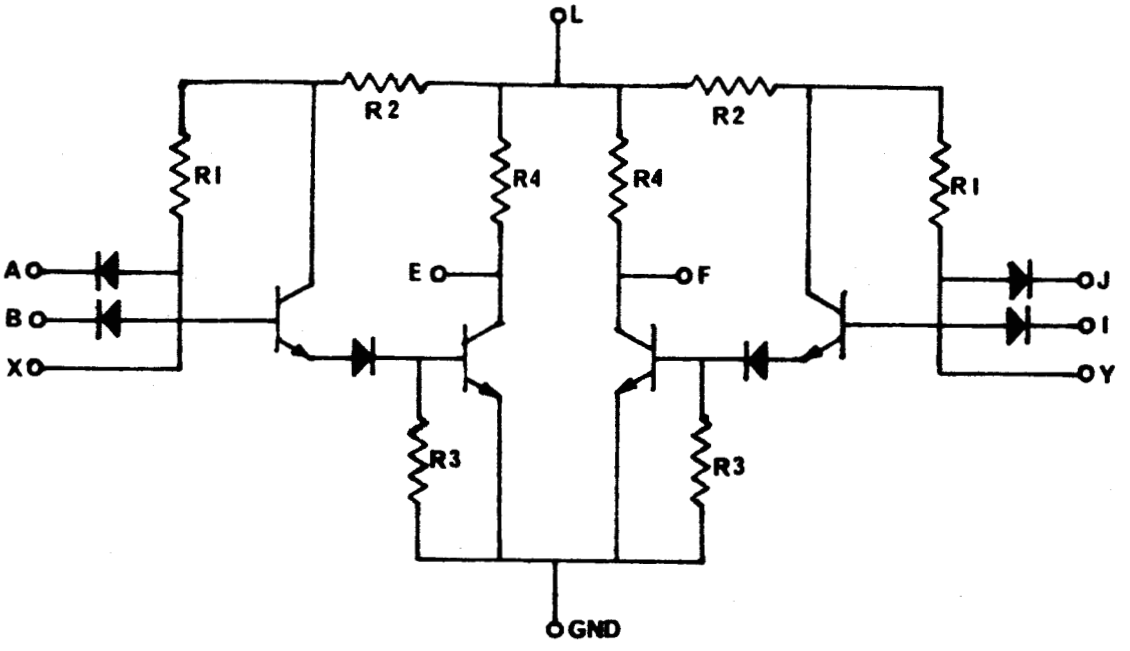


Equivalent Circuit Schematic
Fairchild SL1519 As Ordered

Figure 1

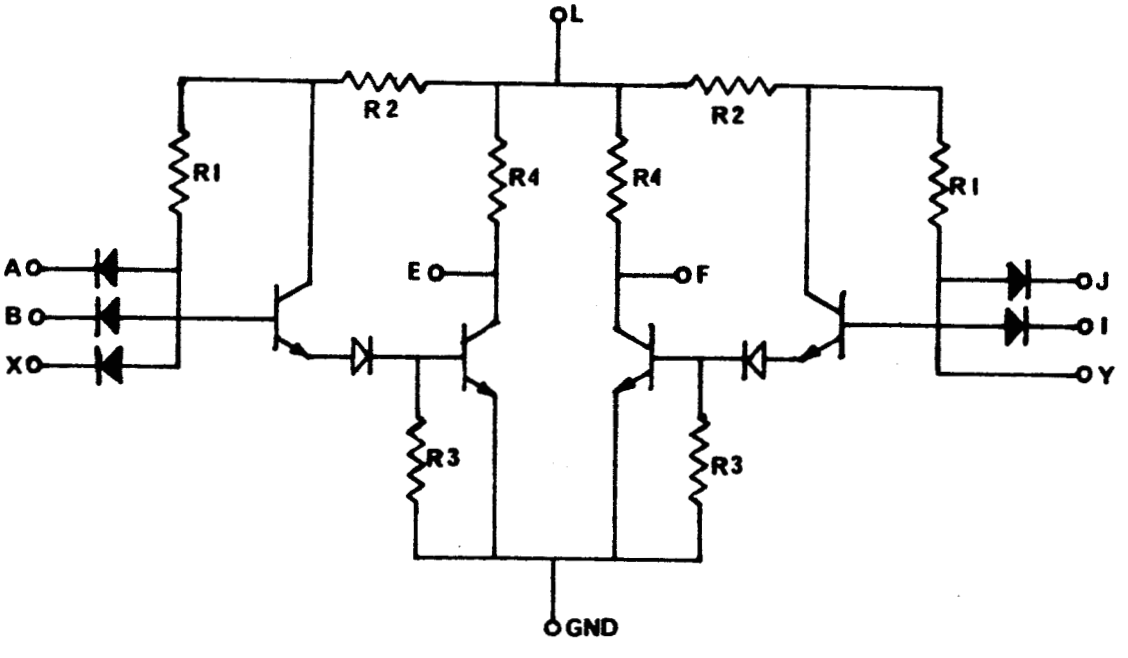


Equivalent Circuit Schematic
Fairchild SL1519 As Delivered
Figure 2

5.0 VERIFICATION TEST

5.1 Test Program (Cont.)

data would be redundant with the high Temperature Step Stress Test as no voltage could have been applied above 150°C, and (b) the mechanisms produced by cycling through high temperature may be such that they could not be related to those temperature cycle produced mechanisms involved with the designed operating range of the devices. Temperature compatibility for materials is generally limited to a finite temperature range.

The Stress Tests are summarized below. The detailed laboratory test procedure is included in the Appendix A.

(a) Operating Life Test (40 samples per vendor)

The Operating Life Test is performed to determine the basic mechanisms which cause failures when the device is operated in a combined power-temperature environment. The devices are operated at the limits of power and loading established by the manufacturer. The specific reaction which this test would activate is involved with switching high peak current and relatively low average currents. This condition will be the most critical in actual system usage when the device does not remain in a single logic state for an appreciable time.

The test will be interrupted for parameter measurements at 100, 250, 500, 1000, and 2000 hours total elapsed time. Parameter measurements consist of reverse diode currents, collector cutoff currents (Vendor B and C only), output transistor saturation voltage, equivalent circuit resistance values and the relative current gain of the unit. These parameters, defined in detail in Appendix A, are performed for all tests at a stabilized temperature of 25°C.

The physical arrangements of parts for the operating life test are shown in Figures 3 and 4.

(b) Temperature Step Stress Test (50 samples per vendor)

The purpose of this test is to study the effects of such basic material reactions as diffusion and precipitation of gold, formation of intermetallic compounds of Au-Al, chemical activation of surface states on device characteristics. The data from this test will be used to formulate

5.0 VERIFICATION TEST (Cont.)

5.1 Test Program (Cont.)

(b) Temperature Step Stress Test (Cont.)

math models which express device degradation as well as indirectly to verify the model postulated for the gold precipitation mechanism. Each of the eight steps has a duration of 240 hours. The temperature steps are 200°C, 250°C, 275°C, 300°C, 315°C, 330°C, 340°C and 350°C.

Parameter measurements will be made at the conclusion of each step. The physical arrangement of parts for the temperature step stress is shown in figure 5.

(c) Temperature Cycle Step Stress (20 samples per vendor)

The object of this test is to study effects of minor incompatibilities in thermal expansion of materials, residual strains within the crystal and the effects of combined temperature and voltage. The test is divided into three steps of 30 cycles each of 24 hour duration. The low temperature for each step is -65°C, the high temperature steps are +125°C, +140°C and +150°C. Voltage is applied to each junction throughout the 1,200 hour test.

Parameter measurements will be performed after each 15 cycles (15 days).

Figure 6 shows the test equipment used in making parameter measurements.

5.2 Test Results

5.2.1 Temperature Stress Test

Measurements have been taken and evaluated after the first step of the temperature step stress test. The results of the measurements indicate that with the exception of the devices noted below, little change has taken place in the units. Units completed the second step (250°C), data is now being evaluated.

One device, Serial Number 100 from Vendor A, experienced a leakage current increase in excess of 160 nanoamps which represents an increase of over 90 times from initial readings, after 200°C exposure. After 250°C, the leakage current increased to 1.4 microamps. The inverse beta of the input diode cluster also increased by 392 nanoamps. Since this device was

5.2 Test Results (Cont.)

5.2.1 Temperature Stress Test (Cont.)

subjected only to high temperature storage, inversion layer formation may be ruled out since no voltage was applied. The unit is currently undergoing failure analysis.

Unit Serial Number 113, Vendor A, has an internal connector error. One of the spare diodes had been connected to the connector instead of the extender terminal. Other small anomalies in the data have been attributed to the instrumentation.

5.2.2 Life Test

Units from Vendor B and C have completed the 100 hours life test; the data indicates no significant change in any parameter. The 250 hours life test has been completed, the data is presently being evaluated.

5.2.3 Temperature Cycle Test

360 hours of Temperature Cycle Tests have been completed with no significant changes in parameter values.

5.2.4 Failure Criteria

The criteria for failure were defined in paragraph 6.4 of the Second Quarterly Report. The criteria are established by the resolution of the instrumentation, the details that can be determined during the failure analysis and the effect on the operating parameters of the device. The variations in measured parameters are examined with respect to this criteria and not with respect to the initial electrical specifications.

## 6.0 FAILURE ANALYSIS

The following procedure will be applied to the failed devices. The photographs were taken from a failed flip-flop circuit used to illustrate the procedure.

1. Remove from board, clean header and remeasure leakage.

2. Redetermine package leak rate if necessary.

3. De-can and examine microscopically.

6.0 FAILURE ANALYSIS (Cont.)

4. Clean and dry. Remeasure leakage, examine microscopically for oxide pinholes. See Figure 7.

5. Remove metalization from faulty diode. Examine microscopically for pinholes. Probe and remeasure leakage. See Figure 8.

6. Remove oxide, rinse and probe to measure leakage. (See Figure 9.)

7. Subject to Infra-Red Radiation. Measure recovery time. This data may be used to deduce gold concentration near the surface.

8. Stain and microscopically examine surface. See Figures 10 and 11.

9. If cause not yet determined, lap through junction areas to locate bulk junction anomalies.

The above sequence of operations was chosen as it is inferred from the data that the leakage is not a result of inversion channeling. This sequence allows examination for specific mechanisms such as oxide defect contamination, metal over oxide defect, gold precipitation or diffusion defect in such a fashion that the effect of previous investigations will be minimized.

7.0 EFFORT FOR THE NEXT QUARTER

The test program will continue. Detailed failure analysis will be performed on all units that show a significant change in parameter measurement. The test data will be analyzed with special emphasis of variation of parameter measurements as a result of the applied stress. Physical and mathematical models of the experienced failure mechansims will be prepared.

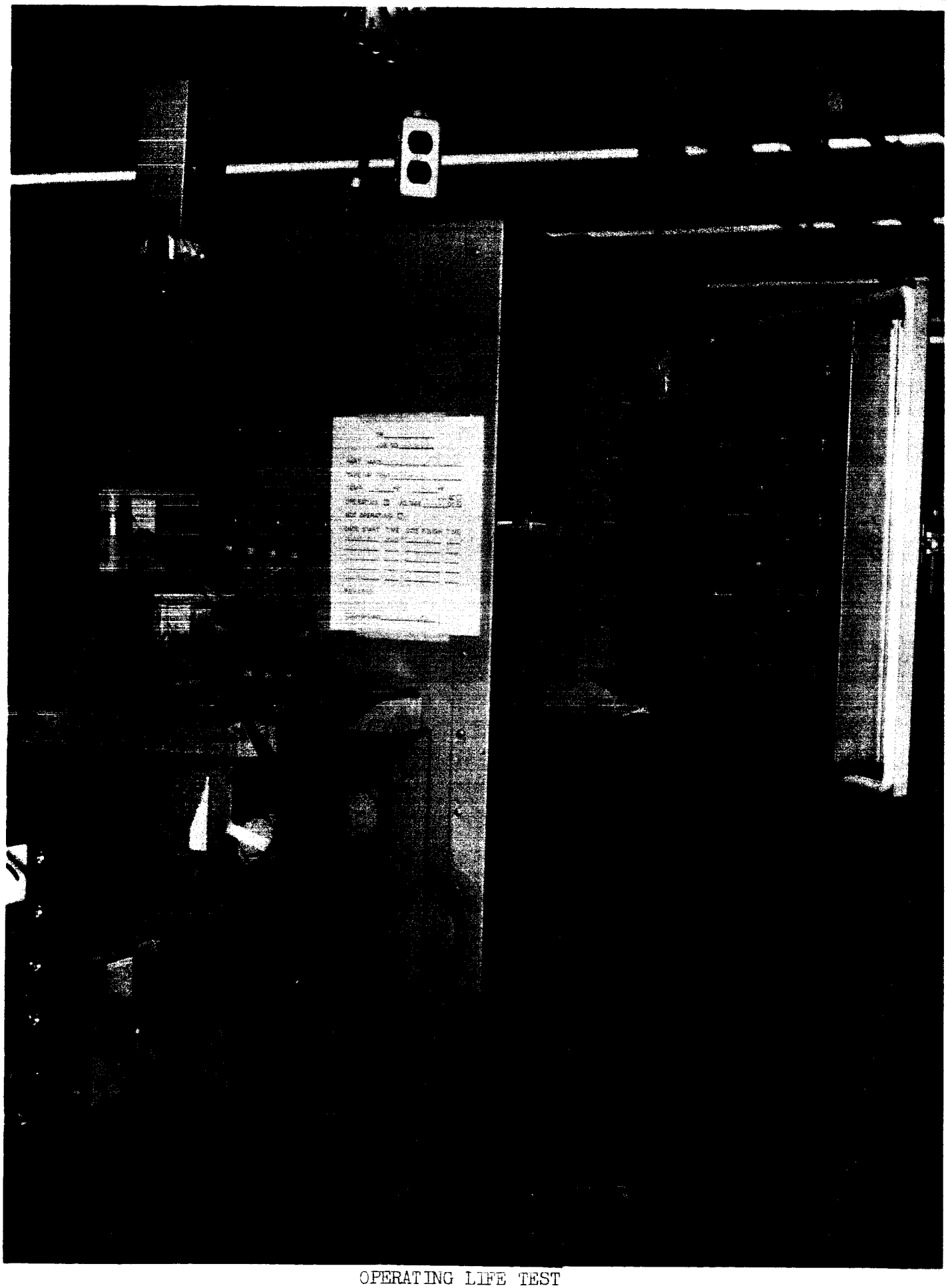

OPERATING LIFE TEST
Interior View of Door
Figure 3

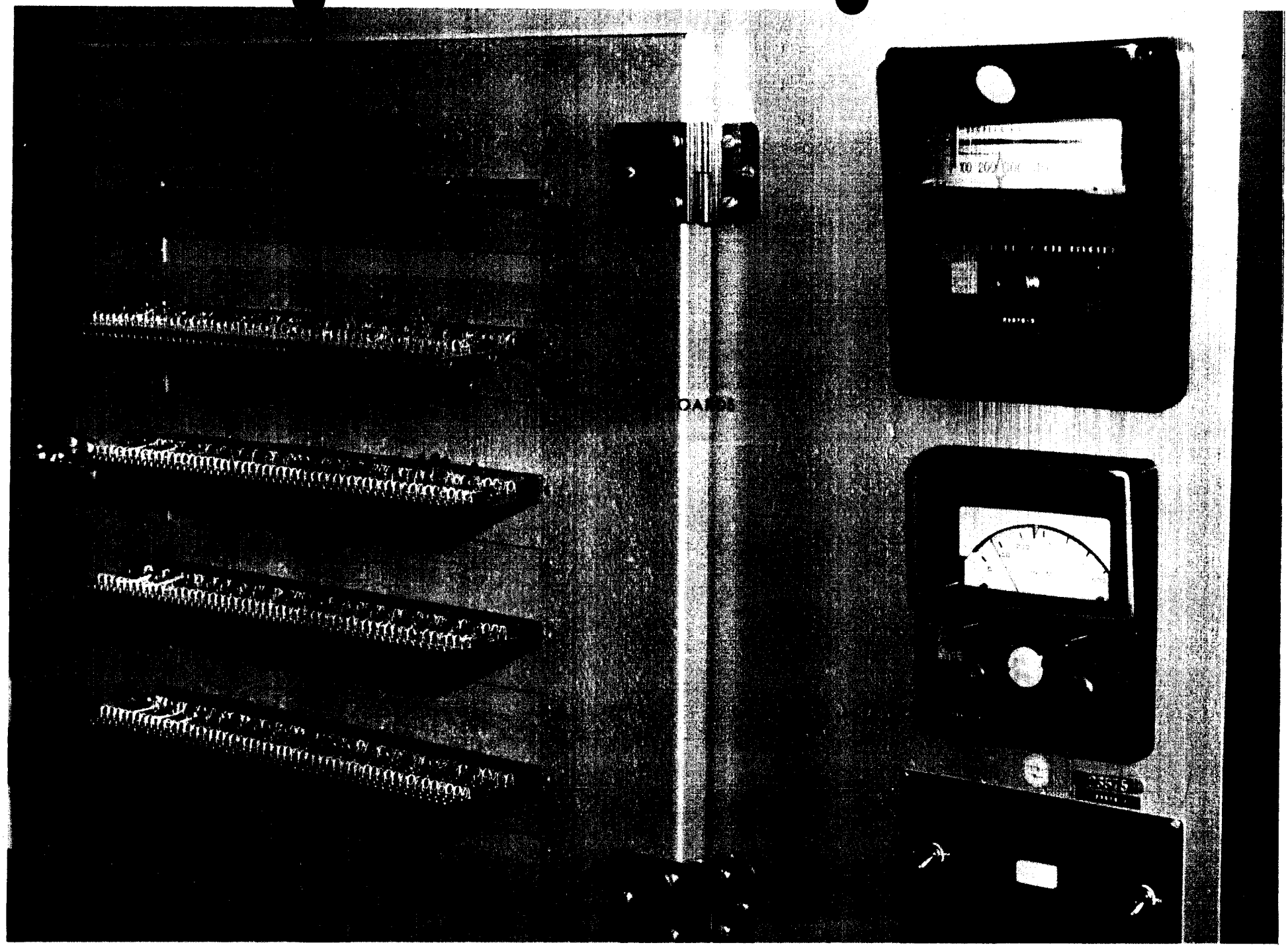

OPERATING LIFE TEST
CHAMBER Front View
Figure 4

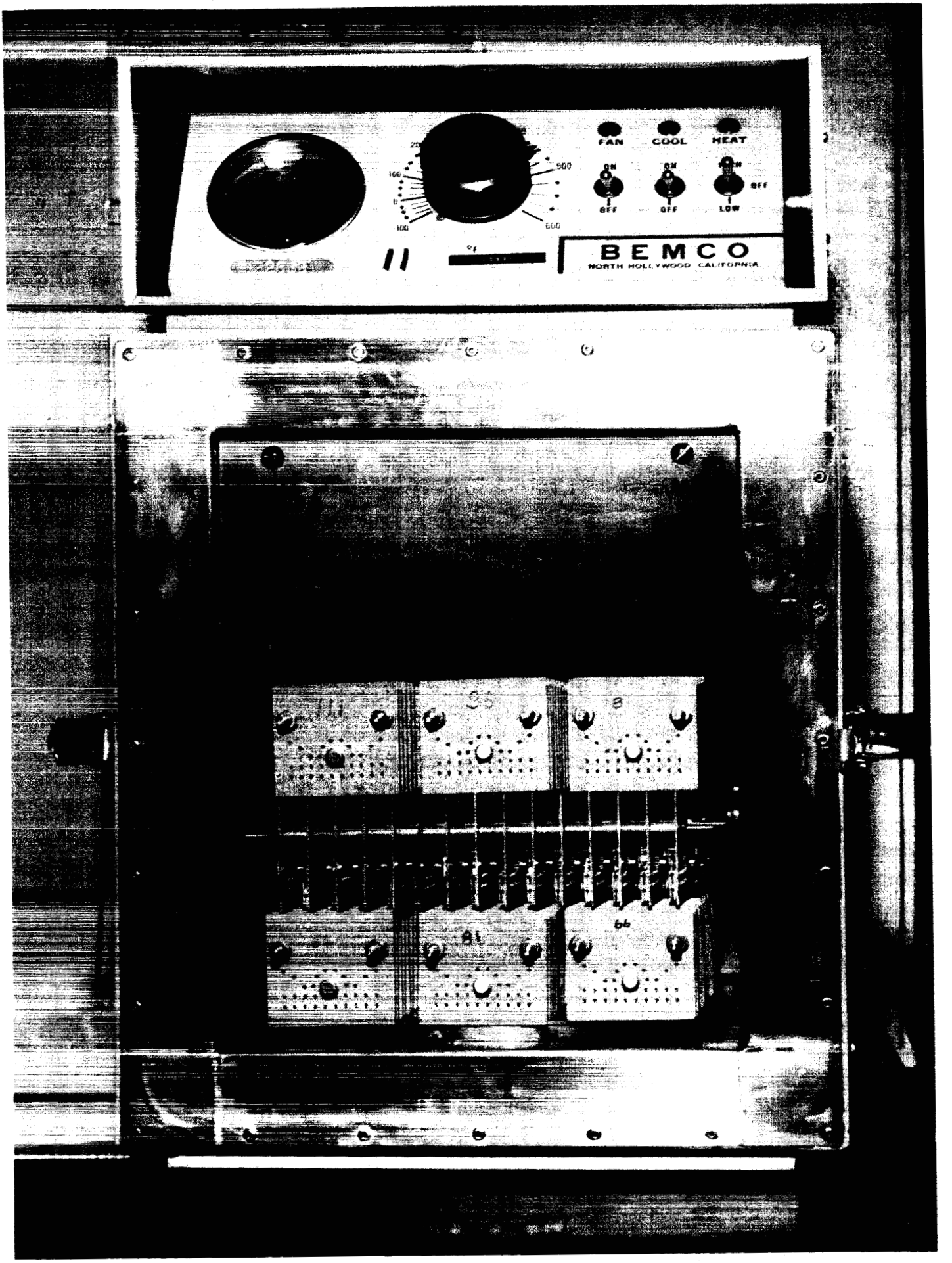


TEMPERATURE STEP STRESS
Interior View of Chamber
Figure 5

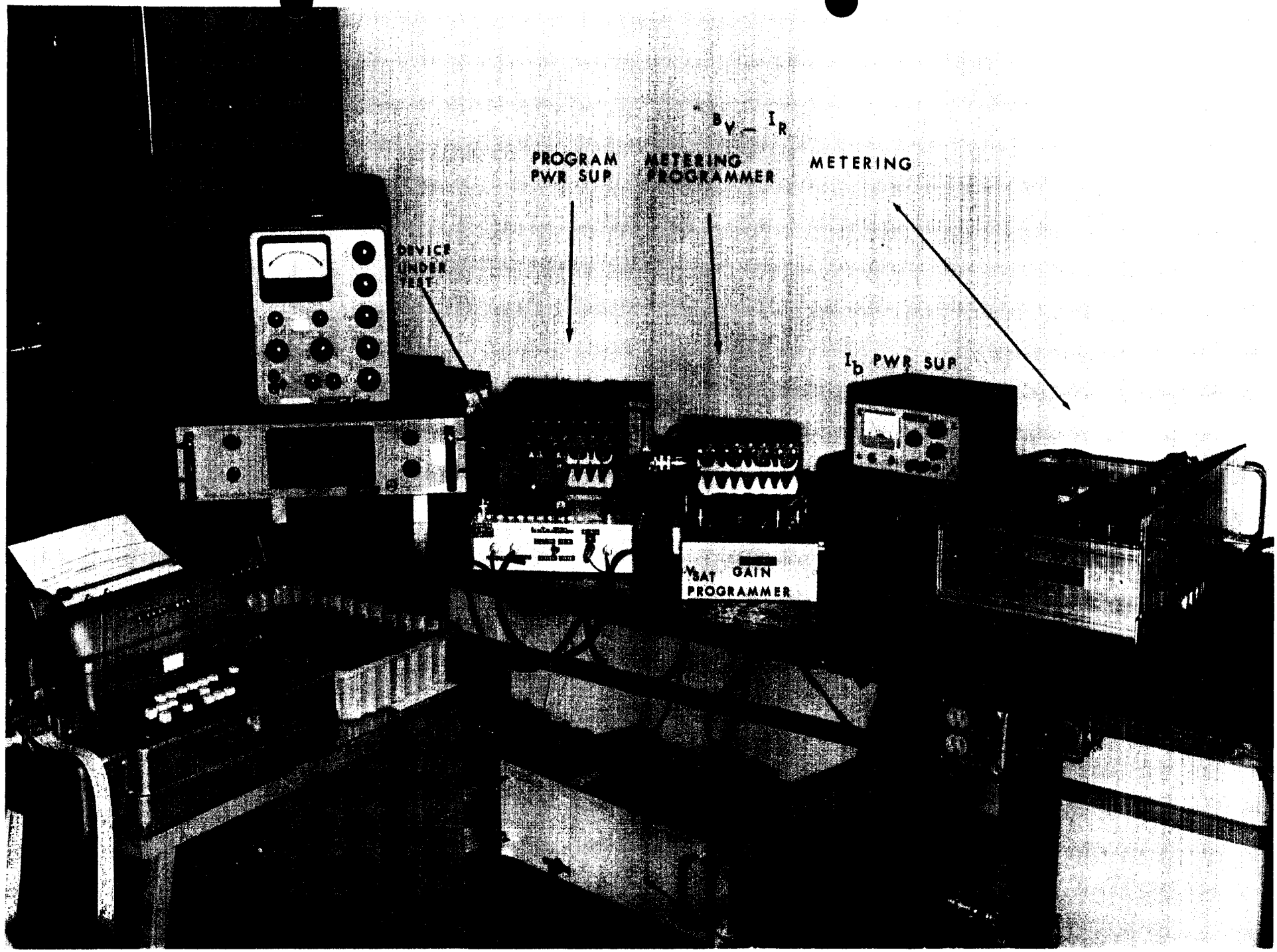


ELECTRICAL TEST STATION
Figure 6

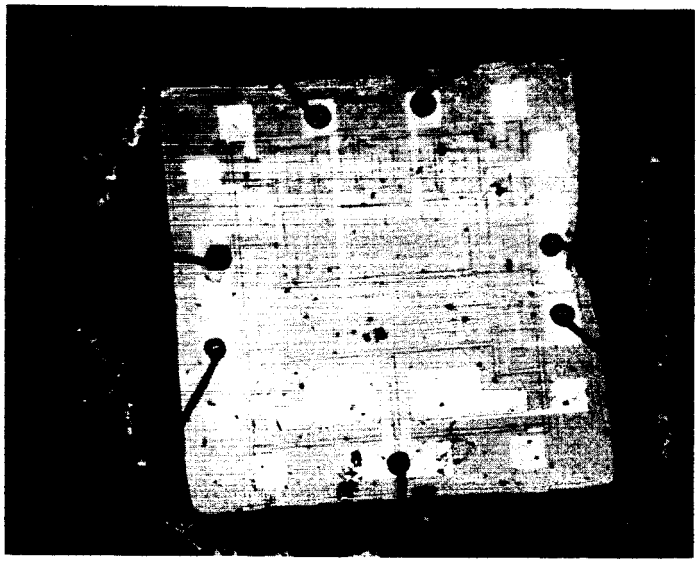

Fig. 7 , Mag. 23X, Complete Microcircuit

Fig. 8 , Mag. 23X, after removing
Al Contacts with KOH.

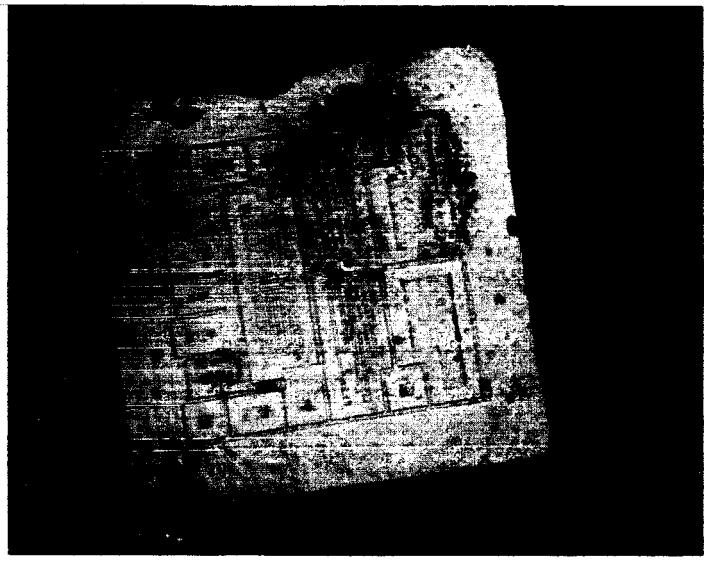

Fig. 9 , Mag. 23X, After HF Treatment
To Remove $SiO_2$

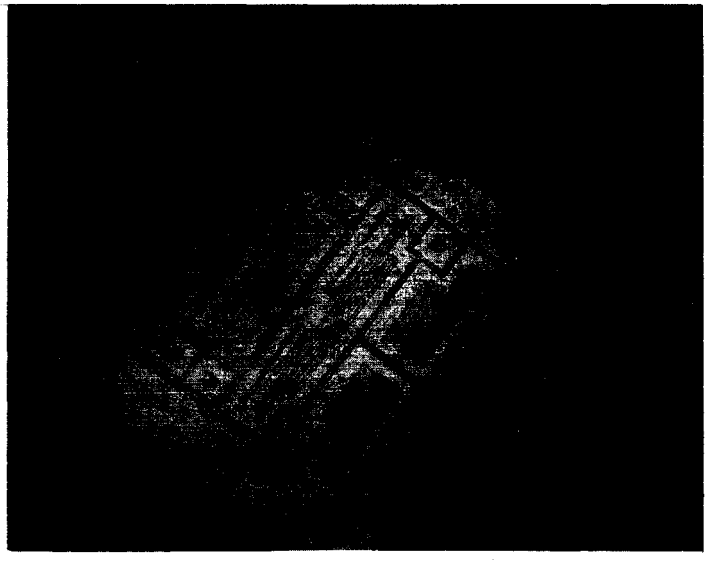

Fig.10, Mag. 23X, Stains by Cu Plating.
Black Areas are Stains of P Type
Material. Red Arrow points
to a possible Diffusion
Defect.

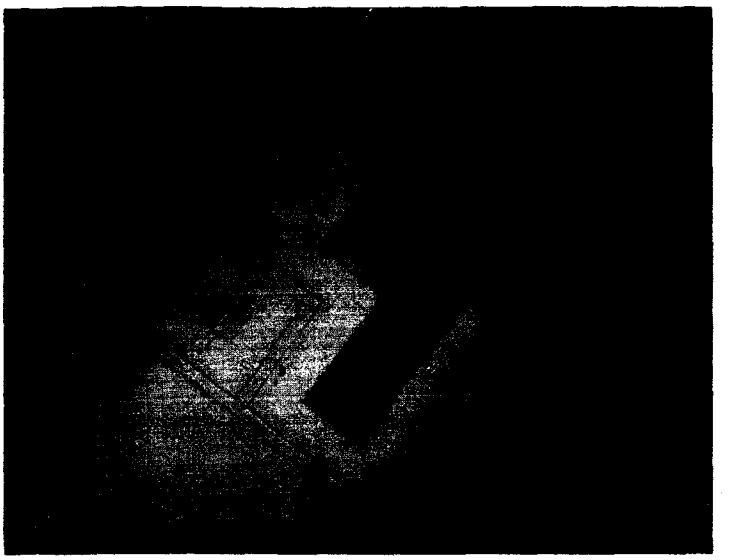

Fig.11, Mag. 73X, Lower Right Hand of Fig.10.

# Appendix A

## Test Procedures

## 1.0 INTRODUCTION -

The purpose of this test program is to study the physics of failure of microelectronic devices. The study program will attempt to predict premoninant failure mechanisms to determine failure rates and also isolate these failure mechanisms in terms of stress levels, material, and process control. The basic test plan is to subject the test samples to an operating life test, temperature step stress test, and a temperature cycle step stress test. This information will be used as an aid for the National Aeronautics and Space Administration in the preparation of specifications for microelectronic devices for application in space systems.

## 2.0 TEST SPECIMEN-

The test specimen chosen for this study program are of the DTL NAND/NOR Gate configuration. All devices for this test program will be in the modified TO-5 package which shall allow minimum handling damage and more favorable autopsy techniques. The devices chosen for this test program are listed in Table I and shall be referenced thereafter in this Test Request by the designated codes.

TABLE I - Device Identification

| Manufacturer | Reference Code * | Part Number | Part Description | Quantity Tested |
|---|---|---|---|---|
| Fairchild | A | SL1519 | DTuL Dual Gate | 110 Devices<br>5 Control |
| Motorola | B | SC736 | DTL NAND/NOR Gate | 110 Devices<br>5 Control |
| Signetics | C | SE102K | DTL NAND/NOR Gate | 110 Devices<br>5 Control |

* All references, including data sheets, shall use these codes in lieu of the manufacturer.

## 3.0 DATA RECORDING-

All test data except for switching time measurements will be recorded on a specially designed reproducible data sheet, which can be accepted by SCAT-24 Flexowriter output. The switching time measurements shall be recorded on Librascope's Standard Laboratory Data Sheets.

## 4.0 ELECTRICAL CHARACTERISTICS-

### 4.1 Initial Electrical Parameter Characteristics:

Table I and II list the parameters to be measured for this test program. Each of the manufacturer's devices represented in this test program are shown in Figures 1 and 2.

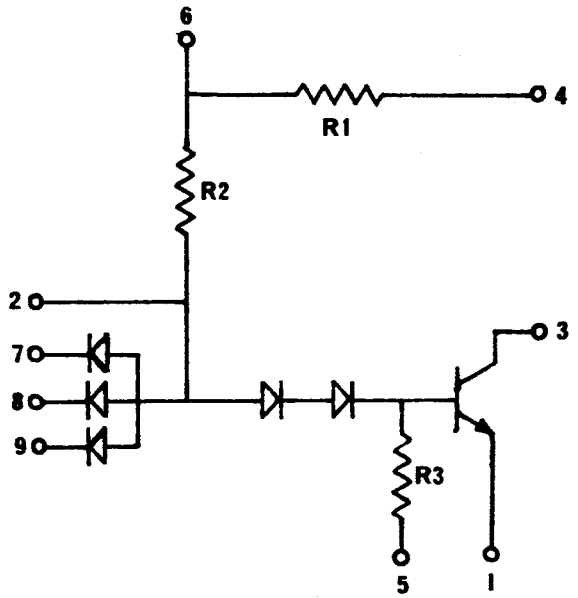


Vendor B and C Equivalent Circuit Schematic

FIGURE 1

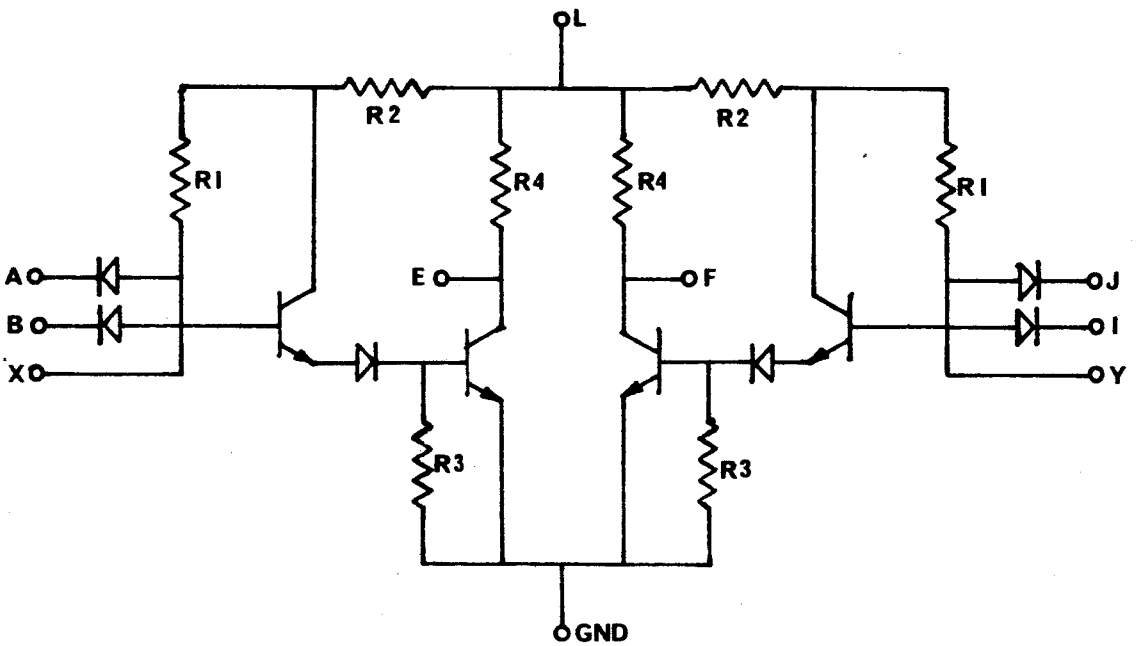


Vendor A Equivalent Circuit Schematic

FIGURE 2

4.0 ELECTRICAL CHARACTERISTICS (Cont'd)-

4.1 Initial Electrical Parameter Characteristics (Cont'd):

TABLE II

Electrical Parameter Characterists for Vendor B and C

| Test | Symbol | Test Condition | Terminal Pins Used | Unit |
|---|---|---|---|---|
| Input Diode Breakdown Voltage | $BV_{7,8,9}$ | $I_{7,8,9}$ = 1uAdc | 2-7, 2-8 and 2-9 All other pins open | Vdc |
| Input Diode Leakage Current | $I_{7,8,9}$ | $V_{7,8,9}$ = +5Vdc | 2-7, 2-8 and 2-9 All other pins open | NAdc |
| Collector-Base Breakdown Voltage | $BV_{CBO}$ | $I_3$ = 1 uAdc | 3-5 All other pins open | Vdc |
| Collector-Base Leakage Current | $I_{CBO}$ | $V_3$ = +4Vdc | 3-5 All other pins open | NAdc |
| Output Saturation Voltage | $V_3$ | $I_3$ = 10mAdc<br>$I_2$ = 1mAdc | 1, 2, and 3 All other pins open | Vdc |

4.0 ELECTRICAL CHARACTERISTICS (Cont'd)-

4.1 Initial Electrical Parameter Characteristics (Cont'd):

TABLE III

Electrical Parameter Characteristics for Vendor A

| Test | Symbol | Test Condition | Terminal Nodes Used | Unit |
|---|---|---|---|---|
| Input Diode Breakdown Voltage | $BV_{1,2,8,9}$ | $I_{1,2,8,9}$ = 1uAdc | 3-1, 3-2 3-8 and 3-9 | Vdc |
| Input Diode Leakage No. 1 | $I_{1,2,8,9}$ | $V_{1,2,8,9}$ = +4Vdc | 3-1, 3-2 3-8 and 3-9 | NAdc |
| Input Diode Leakage No. 2 | $I_{1,2,3,8,9}$ | See Figures 4 and 5 | | NAdc |
| Output Saturation Voltage | $V_4$ | $I_4$ = 10ma, V10 =4Vdc | 4, 10, and 5 All other pins open | Vdc |
| | $V_6$ | $I_6$ = 10ma, V10 =4Vdc | 6, 10, and 5 All other pins open | |
| DC Current Gain | $h_{FE1}$ | $V_4$ = 2.5Vdc, $I_4$=1mAdc | 4, 3, and 5 All other pins open | |
| | $h_{FE2}$ | $V_6$ = 2.5Vdc, $I_6$=1mAdc | 6, 3, and 5 All other pins open | |

4.0 ELECTRICAL CHARACTERISTICS (Cont'd)-

4.1 Initial Electrical Parameter Characteristics (Cont'd):

TABLE II (Cont'd)

| Test | Symbol | Test Condition | Terminal Pins Used | Unit |
|---|---|---|---|---|
| Output Leakage Current | $I_3$ | $V_3$ = 4Vdc | 3-1<br>All other pins open | uAdc |
| DC Current Gain | $h_{FE}$ | $V_3$ = 5Vdc<br>$I_3$ = 1mAdc | 1, 2 and 3<br>All other pins open | |
| Diode Forward Current | $I_{f7}$<br>$I_{f8}$<br>$I_{f9}$ | $V_6$ = +4Vdc | 6-7, 6-8 and 6-9<br>All other pins open | mAdc |
| Resistance Measurements | $R_1$<br>$R_2$<br>$R_3$ | $I_6$ = 1mAdc<br>$I_6$ = 1mAdc<br>$I_2$ = 1mAdc | 6-4<br>6-2<br>2-5<br>All other pins open | Ohms |
| Switching Time | | | | |
| Turn-On Delay | $t_{on}$ | See Figure 6 and Figure 8. | | nsec. |
| Turn-Off Delay | $t_{off}$ | | | nsec. |
| Rise Time | $T_r$ | | | nsec. |
| Fall Time | $T_f$ | | | nsec. |

4.0 ELECTRICAL CHARACTERISTICS (Cont'd)-

4.1 Initial Electrical Parameter Characteristics (Cont'd):

TABLE III (Cont'd)

| Test | Symbol | Test Condition | Terminal Nodes Used | Unit |
|---|---|---|---|---|
| Diode Forward Current | $I_{f1}$<br>$I_{f2}$<br>$I_{f8}$<br>$I_{f9}$ | $V_{10}$ = 4.0Vdc | 10-1, 10-2, 10-8, and 10-9 All other pins open | mAdc |
| Resistance Measurements | $R_1 + R_2$ | $I_{10}$ = 1mAdc | 10-3, and 10-7 | Ohms |
| | $R_4$ | $I_{10}$ = 1mAdc | 10-4 and 10-6 | |
| Switching Time | | See Figures 4 and 5 | | |
| Turn-On Delay | $t_{on}$ | | | nsec. |
| Turn-Off Delay | $t_{off}$ | | | nsec. |
| Rise Time | $T_r$ | | | nsec. |
| Fall Time | $T_f$ | | | nsec. |

4.0 ELECTRICAL CHARACTERISTICS (Cont'd)-

4.1 Initial Electrical Parameter Characteristics (Cont'd):

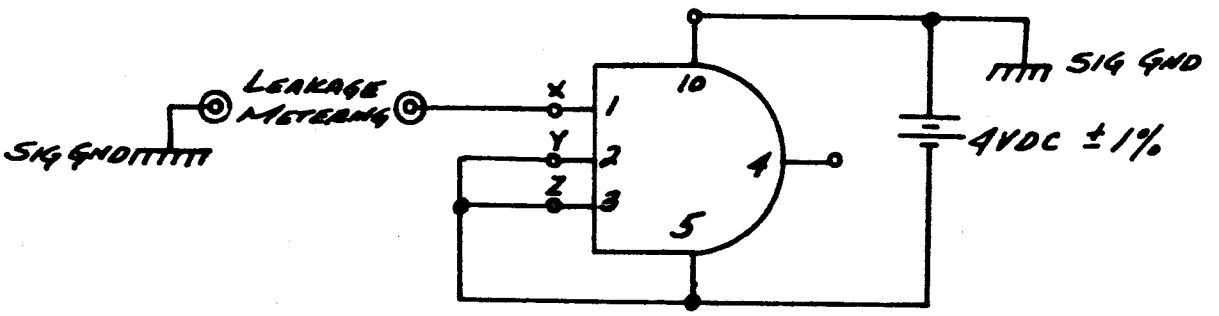


| Leakage Current | Interconnections | |
|---|---|---|
| I1 | X | 1 |
| | Y | 2 |
| | Z | 3 |
| I2 | X | 2 |
| | Y | 1 |
| | Z | 3 |
| I3 | X | 3 |
| | Y | 1 |
| | Z | 2 |

Input Diode Leakage Current No. 2, Vendor A, Section I

FIGURE 4

4.0 ELECTRICAL CHARACTERISTICS (Cont'd)-

4.1 Initial Electrical Parameter Characteristics (Cont'd):

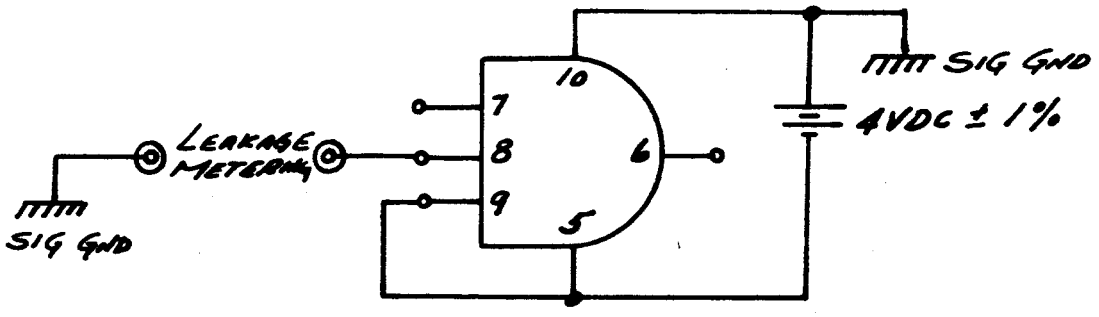


| Leakage Current | Interconnections | |
|---|---|---|
| I8 | X | 8 |
| | Y | 9 |
| I9 | X | 9 |
| | Y | 8 |

Input Diode Leakage Current No. 2, Vendor A, Section II

FIGURE 5

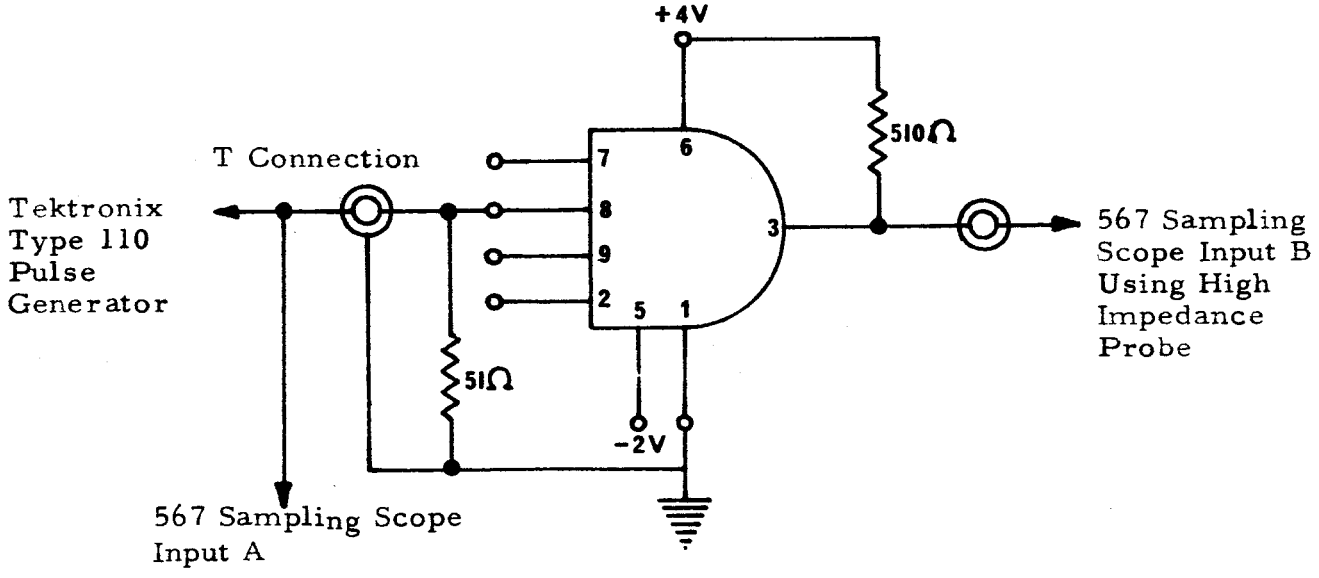


Basic Switching Time Measurement Test Set-Up
For Vendors B And C

FIGURE 6

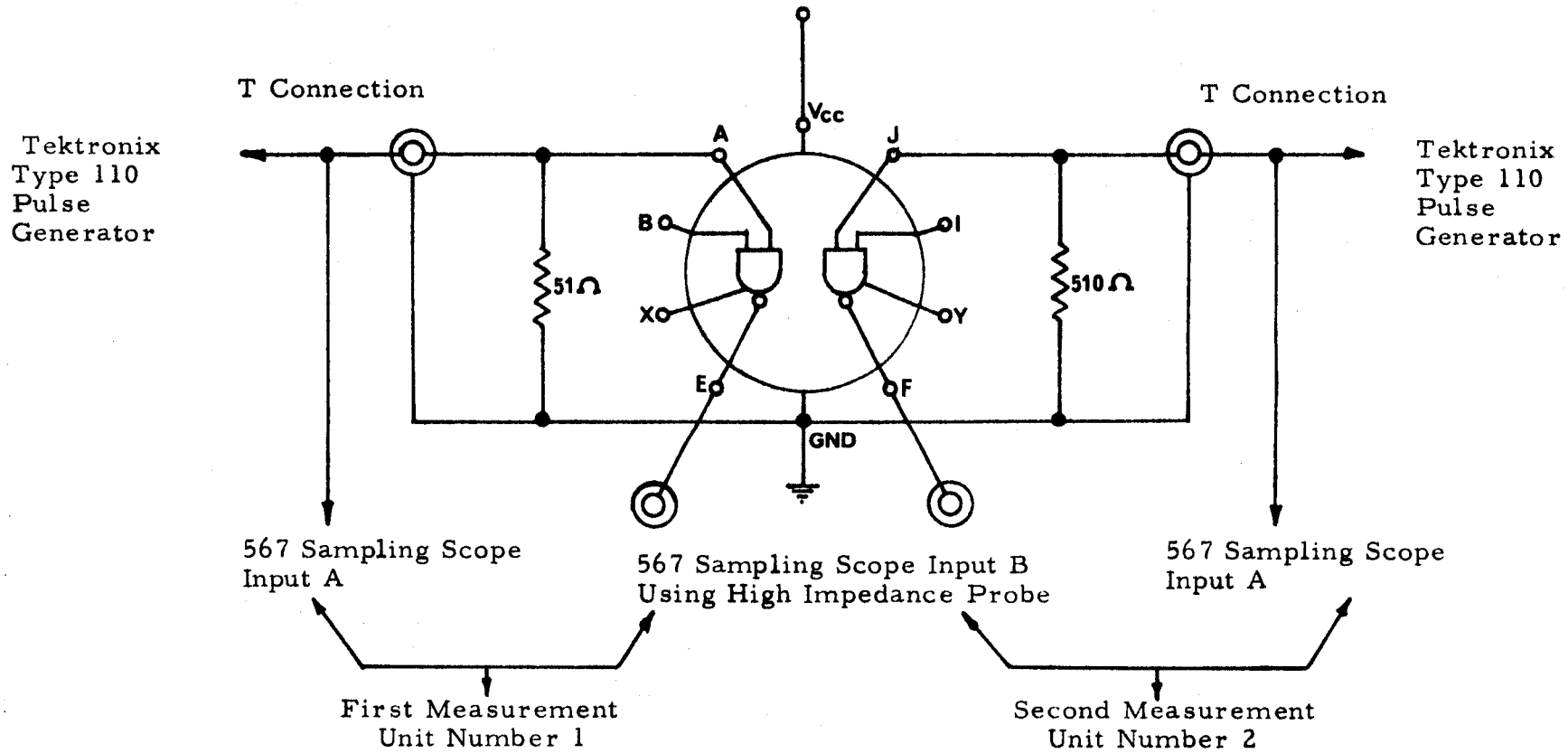


Basic Switching Time Measurement Test Set-Up
For Vendor A Dual Gate

FIGURE 7

4.0 ELECTRICAL CHARACTERISTICS (Cont'd)-

4.1 Initial Electrical Parameter Characteristics (Cont'd):

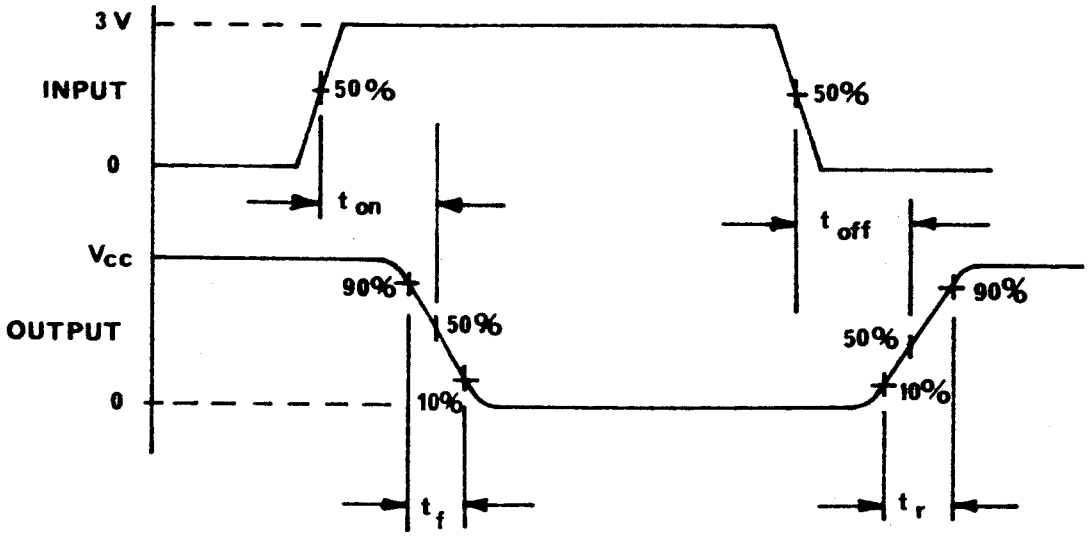


Rise Time, Fall Time, Turn-On Delay And Turn-Off Delay
And Input Pulse Conditions For Switching
Time Characteristics

FIGURE 8

4.1.1 Switching Time Measurements:

The switching time characteristics for this test program will require two basic test set-ups. Vendors B and C, DTL Gates are identical in physical and electrical characteristics. Therefore, the same basic test set may be used for both gates. The basic switching time measurement test set-up is shown in Figure 8.

Vendor A DTuL Dual Gate, because of its difference in physical characteristics and circuit configuration, will require a separate test set-up as shown in Figure 9. Each gate will be tested individually and each unit shall be identified as shown in Figure 9.

The switching time shall be defined for all gates as shown in Figure 10.

4.2 Post Environmental Parameter Measurements:

The following Table lists the parameters to be measured at each post environmental data point.

4.0 ELECTRICAL CHARACTERISTICS (Cont'd)-

4.2 Post Environmental Parameter Measurements (Cont'd):

TABLE IV

Post Environmental Parameter Measurement

| Device Type | Parameter | Measure Per Table |
|---|---|---|
| Vendor B and C | Input Diode Breakdown Voltage | Table II |
| | Input Diode Leakage Current | Table II |
| | Output Saturation Voltage | Table II |
| | Collector-Base Leakage Current | Table II |
| | Resistance Measurements | Table II |
| | Diode Forward Current | Table II |
| | DC Current Gain | Table II |
| Vendor A | Input Diode Breakdown Voltage | Table III |
| | Input Diode Leakage Current No. 1 and 2 | Table III |
| | Output Saturation Voltage | Table III |
| | Resistance Measurements | Table III |
| | Diode Forward Current | Table III |
| | DC Current Gain | Table III |

Prior to making post environmental measurements, a verification check of the test equipment shall be performed per TR 1-1188-1. When the instrumentation has completed verification procedures, the instrumentation control samples shall be measured per Table IV. When the control samples have satisfactorily completed the parameter measurements, the test specimen shall be measured. If five consecutive devices, during the measurement interval, should fail to meet the tolerance limits established for this test program, measurements shall be discontinued and instrumentation shall be re-verified.

4.0 ELECTRICAL CHARACTERISTICS (Cont'd)-

4.2 Post Environmental Parameter Measurements (Cont'd):

Upon completion of the post environmental measurements, a final verification check shall be performed.

All recorded data shall be reviewed by the cognizant engineer before the test specimen are allowed to recontinue environmental testing.

4.3 Failure Criteria:

Table V lists the maximum allowable tolerance limits for the test program.

TABLE V

Failure Criteria

| Parameter Type | Change |
|---|---|
| Reverse Junction Current $I_R$, $I_{CBO}$, $I_{CRO}$ | Initial X10 but greater than 10n amp |
| Output Saturation Voltage $V_{CE(SAT)}$ | ±10% of initial value but greater than ±10mv. |
| Effective Gain $h_{FE}$, $h_{fe}$ | ±20% of initial value |
| Resistance | ±10% of initial value |
| Junction Breakdown Voltages $BV_R$, $BV_{CBO}$, $BV_{CEO}$ | ±25% of initial value -20% |

Preliminary failure analysis will be conducted on each failure defined by the above criteria to determine the component or parameter which is responsible for the change. These procedures are outlined in Section 7.0 of this report.

5.0 ENVIRONMENTAL TESTS-

5.1 Operating Life Test:

The DTL Gates shall be subjected to an operating life test at an ambient temperature of +125°C $^{+3°}_{-0°}$ C. The gates shall be switched into "0" and "1" state using parallel switching. (See Figures 9 and 10 for basic life test). The life test shall beinterrupted and post environmental measurements will be made at the prescribed intervals: 100±8, 250±12, 500±12, 1000±24 and every 1000±24 hours thereafter.

5.0 ENVIRONMENTAL TESTS (Cont'd)-

5.2 Temperature Cycle Step Stress:

The microcircuit gates will be subjected to a temperature cycle step stress test. The conditions of the test will be as follows:

TABLE VI

Temperature Cycle Step Stress Requirements

| Step | 1 | 2 |
|---|---|---|
| No. of Cycles | 30 | 30 |
| Upper Temp. Extreme | +125°C | +150°C |
| Lower Temp. Extreme | -55°C | -55°C |
| Total Time of Step | 720 Hours | 720 Hours |

In addition to the temperature cycle step stress, a constant reverse bias voltage will be applied to the devices. The devices will be connected in the manner shown in Figures 10 and 11.

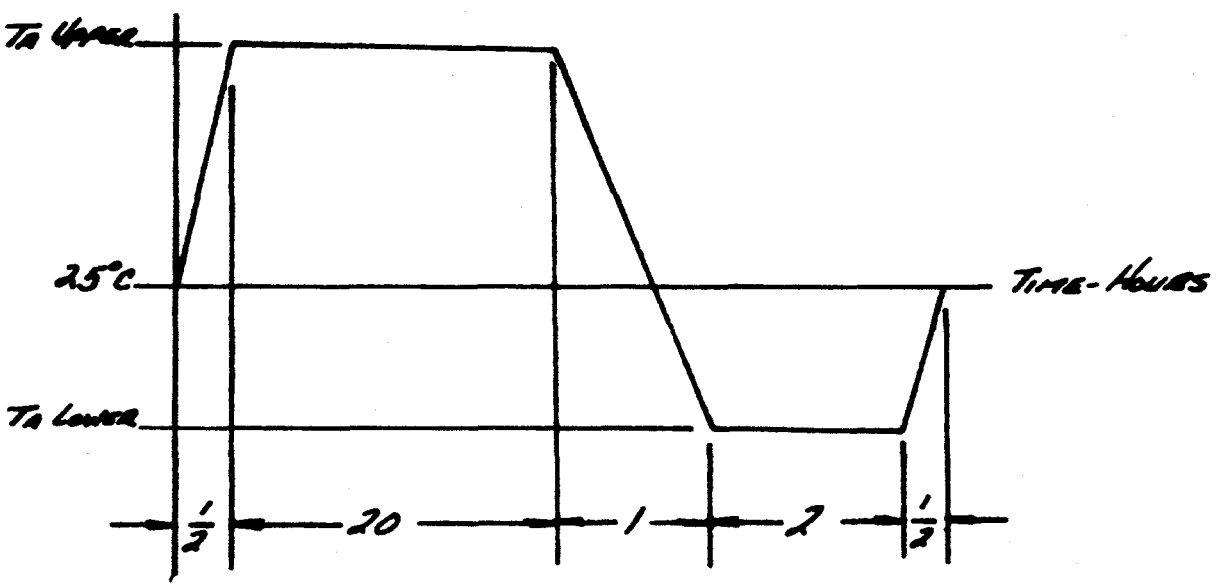


Definition of One Cycle of Temperature Cycle

FIGURE 9

5.0 ENVIRONMENTAL TESTS (Cont'd)-

5.2 Temperature Cycle Step Stress (Cont'd):

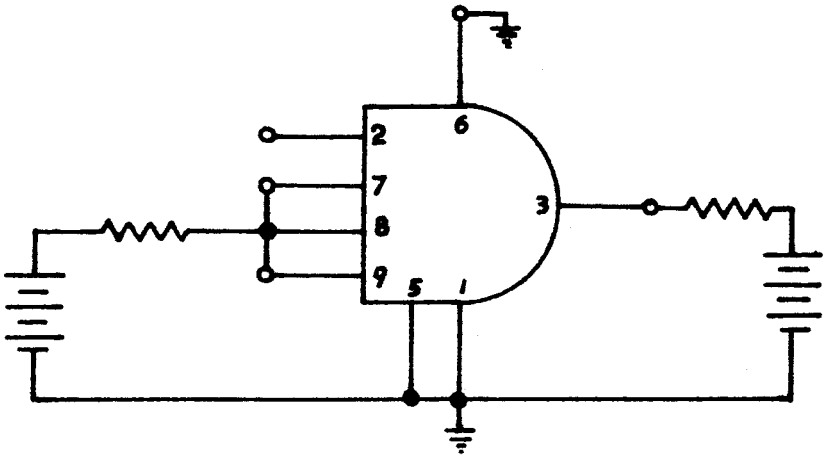


Vendors B and C Reverse Bias Connection For
Temperature Cycle Step Stress Test

FIGURE 10

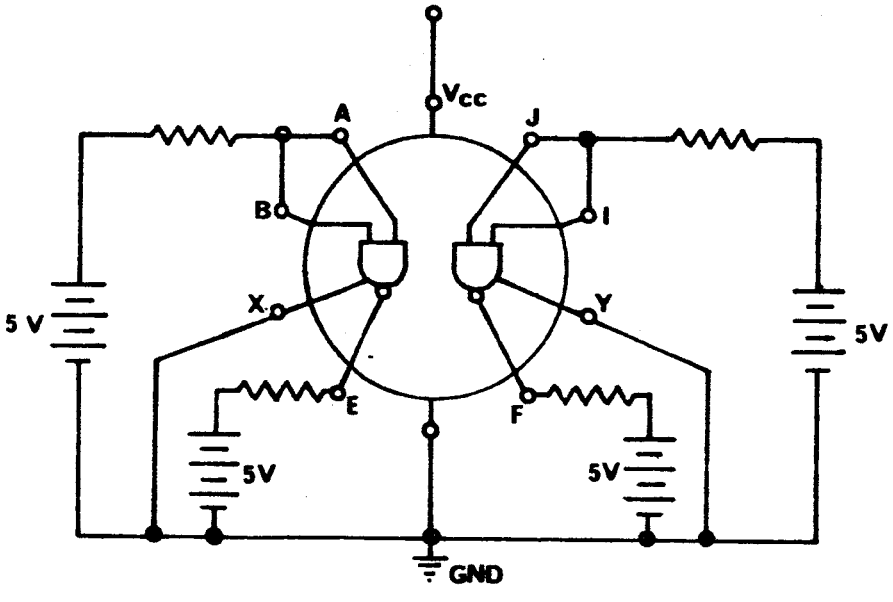


Vendor A Reverse Bias Connections For
Temperature Cycle Step Stress Test

FIGURE 11

5.0 ENVIRONMENTAL TESTS (Cont'd)-

5.3 Temperature Step Stress:

The microcircuit gates non-operating, shall be subjected to a temperature step stress test. The conditions of the test shall be as shown in Table VII.

TABLE VII

Temperature Step Stress Requirements

| Step | 1 | 2 | 3 | 4 | 5 | 6 | 7 | 8 |
|---|---|---|---|---|---|---|---|---|
| Ambient Temp. ($T_a$) | 200°C | 250°C | 275°C | 300°C | 315°C | 320°C | 340°C | 350°C |
| Time Duration (Hrs.) | 240 | 240 | 240 | 240 | 240 | 240 | 240 | 240 |

6.0 TEST PROCEDURE-

6.1 Device Identification:

Each of the three manufacturers device types shall be identified in numerical order, 1 through 115. All devices mounted on printed circuit boards shall be identified with a high temperature label. All devices mounted on the high temperature (MYKROY 750) boards shall be identified by scribing into the surface of the board.

6.2 Leak Rate Test:

All devices except the instrumentation control units shall be subjected to a leak detection test. The devices shall be tested by the radioactive gas traces method using Kr 85 gas. The leak rate sensitivity shall be $1X\ 10^{-8}$ cc/sec. per MIL-STD-202B, Method 112.

6.3 Initial Electrical Parameter Measurements:

Initial electrical parameter measurements shall be performed on all devices in accordance with Tables II or III, whichever is applicable. The Initial parameter measurements shall be made with SCAT-24 or equivalent except for switching characteristics which shall be performed with the Tektronix 567 Sampling Scope. Prior to making DC parameter measurements, refer to TR 1-1188-1 for programming and instrumentation verification procedures.

6.4 Test Sample Grouping:

Upon completion of the initial measurements, the devices shall be divided into four groups. The four groups shall be designated as shown in Table VIII.

6.0 TEST PROCEDURE (Cont'd)-

6.4 Test Sample Grouping:

TABLE VIII

Test Sample Grouping

| Group Designation | Group Number | Sample Size Per Device Type | Device Identification |
|---|---|---|---|
| Instrumentation Control Group | I | 5 | 1 - 5 |
| Operating Life Test Group | II | 40 | 6 - 45 |
| Temperature Cycle Step Stress Group | III | 20 | 46 - 65 |
| Temperature Step Stress Group | IV | 50 | 66 - 115 |

Figure 12 shows the basic test sequence, however, detailed information on each environment is referred to the Environmental Tests Section (Paragraph 5.0) of this test request.

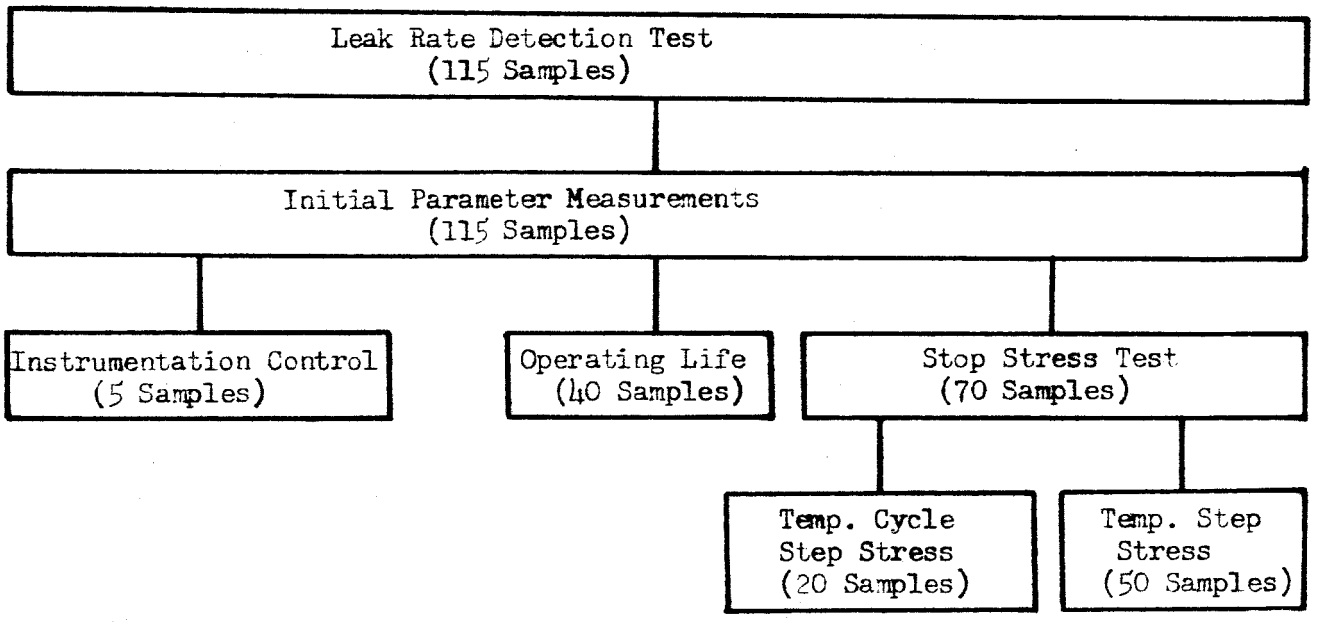


Basic Test Sequence with Sample Distribution by Quantity

FIGURE 12

6.0 TEST PROCEDURE (Cont'd)-

6.5 Instrumentation Control Group:

Samples numbered 1 through 5 shall be used as instrumentation control. These units shall be measured at each data point of the test sequence. This data shall be reviewed and compared with previous measurements prior to performing any measurements on the test samples.

6.6 Operating Life Test:

Upon completion of the initial measurements, samples numbered 6 through 45 shall be subjected to an operating life test and electrical parameter measurements (post environmental measurements) shall be made at the intermittent periods as specified in Paragraph 5.1. Those parameters to be measured are specified in Table IV, Paragraph 4.2.

The basic life test circuits are shown in Figures 13 and 14. Special printed circuit boards shall be designed to provide all necessary connections for the parallel switching requirements established for this test program. These boards shall be fitted into the door connectors provided on the temperature chambers. All external loads, as shown in Figures 14 and 14, shall be mounted on diode load boards and installed in the external connectors of the temperature chambers.

A buffer-driver fixture shall be provided to switch the test devices. The buffer-driver shall be driven by a Tektronix 105 Square Wave Generator as shown in Figures 13 and 14. The primary functions of the Square Wave Generator shall be set-up as follows:

1) Set frequency range for 1 mc.

2) Adjust the symmetry and frequency vernier for a symetrical input to the Buffer-Driver (Monitor with scope).

3) Adjust the output amplitude such that the output of the Buffer Driver is approximately 4.5 volts peak-to-peak and the rise and fall times are equal to or less than 30 nanoseconds.

4) Check all outputs of the devices under test to insure proper switching.

6.0 TEST PROCEDURE (Cont'd)-

6.6 Operating Life Test (Cont'd):

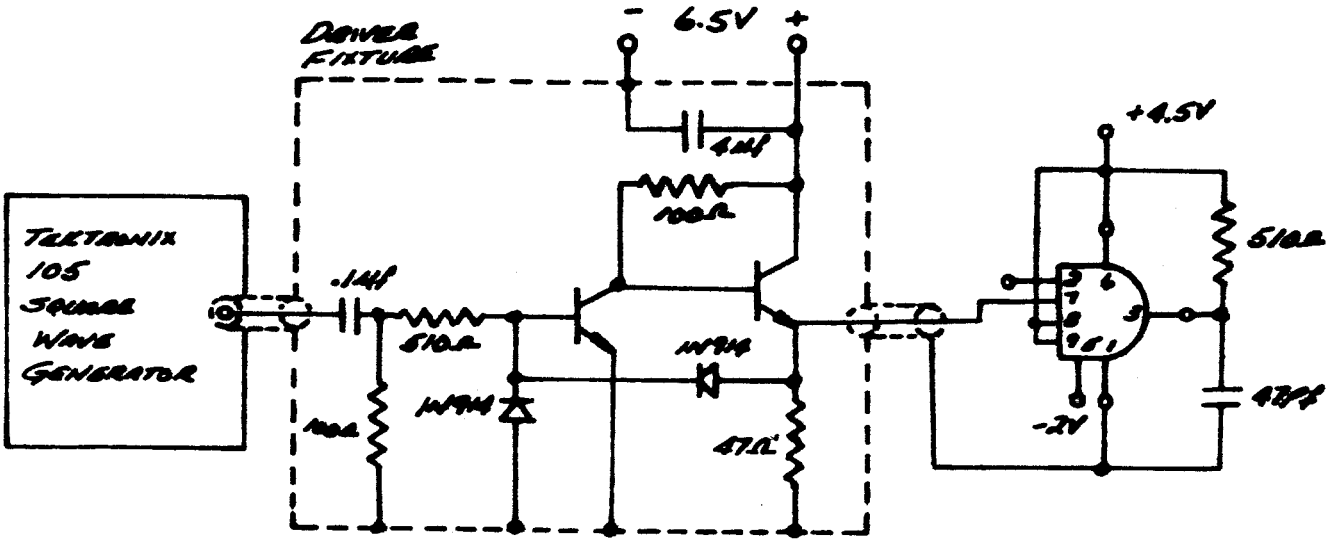


Basic Operating Life Test For
Vendors B and C

FIGURE 13

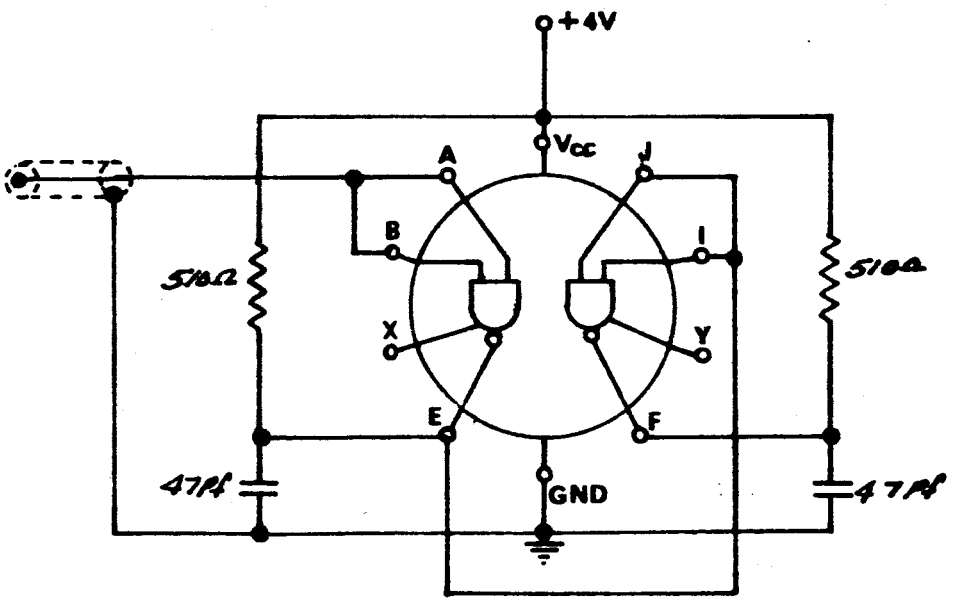


Basic Operating Life Test For
Vendor A

FIGURE 14

6.0 TEST PROCEDURE (Cont'd)-

6.6 Operating Life Test (Cont'd):

When the devices have reached the specified life test intermittent periods, the chamber temperature shall be reduced without shock to an ambient temperature equal to or less than 55°C. Then device power shall be removed. A period of one hour shall be allowed for device stabilization prior to parameter measurements. The total measurement test time should be held to a minimum. Consistency from data point to data point in regard to stabilizing time and measurement time should be maintained as close as practicable.

Upon completion of the life test, final measurements shall be performed as specified in Paragraph 7.0.

6.7 Temperature Cycle Step Stress Test:

Devices from Group III, numbered 46 through 65 shall be subjected to the temperature cycle step stress test with the conditions specified in Paragraph 5.2. Upon completion of each 15 cycle, post environmental parameter measurements shall be made as specified in Table IV, Paragraph 4.2.

The basic reverse bias circuits are shown in Figures 10 and 11. Special printed circuit boards shall be made to provide all bias connections. Current limiting resistors shall be used for device protection and shall be mounted externally to the chambers.

Upon completion of each 15 cycles, the chamber temperature shall be reduced without shock to an ambient temperature of 25°C. Then the reverse bias voltages shall be removed. A period of one hour shall be allowed for device stabilization prior to parameter measurements. The total measurement test time should be held to a minimum. Consistency from data point to data point in regard to stabilizing time and measurement time should be maintained as close as practicable.

Upon completion of the final cycle the device shall be subjected to the final parameter measurements as specified in Paragraph 7.0.

6.8 Temperature Step Stress Test:

Devices from Group IV, numbered 66 through 115 shall be subjected to the temperature step stress test with the conditions specified in Paragraph 5.3. Upon completion of each step, post environmental parameter measurements shall be made as specified in Table IV, Paragraph 4.2. No bias shall be applied during this test.

6.0 TEST PROCEDURE (Cont'd)-

6.8 Temperature Step Stress Test (Cont'd):

Upon completion of each step, the chamber temperature shall be reduced without shock to an ambient temperature of 25°C. A period of one hour shall be allowed for device stabilization prior to parameter measurements. The total measurement test time should be held to a minimum. Consistency from data point to data point in regard to stabilizing time and measurement time should be maintained as close as practicable.

Upon completion of the final step, final measurements shall be performed as specified in Paragraph 7.0.

7.0 FINAL ELECTRICAL PARAMETER MEASUREMENTS-

Upon completion of each of the tests specified in Paragraph 6.0, final parameter measurements shall be made. The final measurements shall be identical to the initial measurements, as shown in Tables II and III of this test request.

8.0 FAILURE ANALYSIS-

8.1 Introduction:

Failure analysis will be performed at two levels. Preliminary analysis will be performed in the Environmental Laboratory and will consist of a series of electrical measurements and/or thermal annealing as indicated from the failure modes.

In general, preliminary failure analysis shall not in itself destroy a degradation failure for future testing.

Detailed failure analysis will, on the other hand, be considered destructive and will consist of a more rigourous electrical examination of the device which may lead a detailed material analysis to verify the basic material change.

8.2 Preliminary Failure Analysis:

Preliminary analysis will be instituted on all degradation failures, and will consist of repeating the initial measurements to the extent necessary to identify the part of the circuit that has caused the drift out of tolerance. For example, all leakage current failures will be exposed without bias a 150°C ambient for a period of 24 hours. Then the characteristics will be remeasured. This procedure will indicate whether the increase in leakage was caused by some surface mechanism such as an inversion layer formed at the junction (in which case the increase in reverse current would be reduced considerably) or whether some other mechanism has operated to cause the increased leakage.

Appendix B

Test Data Sheets

GENERAL PRECISION, INC
LIBRASCOPE GROUP

# ENVIRONMENTAL LABORATORY DATA SHEET

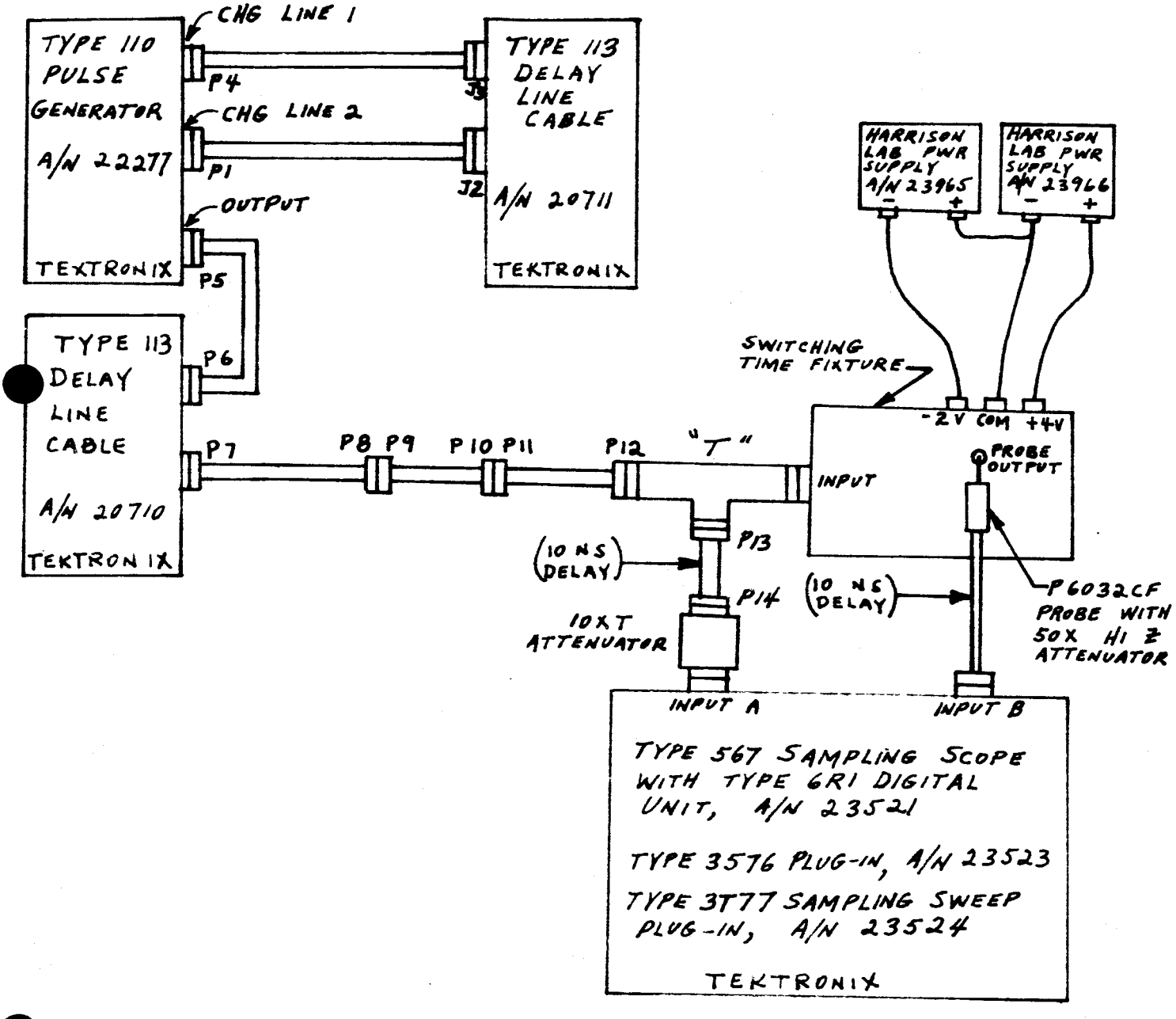


CABLE CONNECTIONS FOR SWITCHING TIME CHARACTERISTICS

| | | |
|---|---|---|
| TEST CONDUCTED FOR NASA, OFFICE OF ADVANCED RESEARCH AND TECHNOLOGY | | DATE 1-26-65 |
| TEST | SAMPLE NUMBER | BAROM PRESS IN HG |
| PART NAME & NUMBER | TEST MEDIUM | WET BULB TEMP |
| MANUFACTURER | TEST TEMP C. F. | DRY BULB TEMP. |
| ENGINEER N. D. Wittman | TECHNICIAN D. Harris | INSPECTOR |
| REF SPEC | | DATA SHEET NUMBER 1 |

JOB NUMBER _____ PAGE OF TEST REPORT NO. _____

GENERAL PRECISION, INC.
LIBRASCOPE GROUP

# ENVIRONMENTAL LABORATORY DATA SHEET

| GROUP I | TEST CONDITIONS: IF RETEST CHECK ☐ | SAMPLE NUMBER | $t_{on}$ | $t_{off}$ | $t_r$ | $t_f$ | | | |
|---|---|---|---|---|---|---|---|---|---|
| | | | NS | NS | NS | NS | | | |
| | | 1 | 49 | 34 | 54 | 22 | | | |
| | | 2 | 48 | 33 | 51 | 23 | | | |
| | | 3 | 49 | 32 | 49 | 23 | | | |
| | | 4 | 51 | 30 | 50 | 26 | | | |
| | | 5 | 50 | 34 | 52 | 24 | | | |
| | | | | | | | | | |
| SET-UP | | | | | | | | | |
| [illegible]NS [illegible]NE/DIVISION | | | 20 | 20 | 20 | 20 | | | |

| | | |
|---|---|---|
| TEST CONDUCTED FOR: NASA, OFFICE OF ADVANCED RESEARCH AND TECHNOLOGY | | DATE: 3-26-65 |
| TEST: INITIAL MEAS.-SWITCHING CHARACTERISTICS | SAMPLE NUMBER: NOTED | BAROM. PRESS. IN. HG |
| PART NAME & NUMBER: DTL NAND/NOR GATE - SE102K | TEST MEDIUM: AIR | WET BULB TEMP. 60° F |
| MANUFACTURER: C | TEST TEMP. 74 C. ☐ F. ☒ | DRY BULB TEMP. 74° F |
| ENGINEER: N. D. Wintsen | TECHNICIAN: D. Harris | INSPECTOR |
| REF. SPEC. | | DATA SHEET NUMBER |

JOB NUMBER AO-138-AE PAGE OF TEST REPORT NO. TR1-1188

601-2
1/64

GENERAL PRECISION, INC.
LIBRASCOPE GROUP

# ENVIRONMENTAL LABORATORY DATA SHEET

TEST CONDITIONS:
IF RETEST CHECK ☐

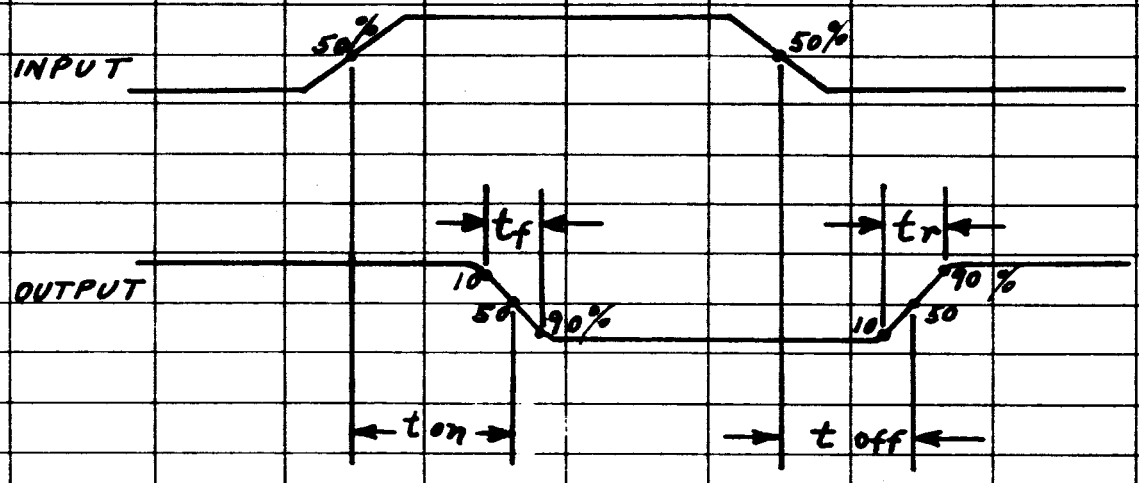


| MFG | C | B | A SECTION 1 | A SECTION 2 |
|---|---|---|---|---|
| | [redacted] | [redacted] | [redacted] | [redacted] |
| INPUT PULSE | +3V | +3V | +3V | +3V |
| -2V AT | PIN 5 | PIN 5 | — | — |
| +4V AT | PIN 6 | PIN 6 | PIN 12 | PIN 12 |
| COMM AT | PIN 1 | PIN 1 | PIN 6 | PIN 6 |
| OUTPUT PULSE AT | PIN 3 | PIN 3 | PIN 5 | PIN 7 |

| | | |
|---|---|---|
| TEST CONDUCTED FOR NASA, OFFICE OF ADVANCED RESEARCH AND TECHNOLOGY | | DATE 1-26-65 |
| TEST | SAMPLE NUMBER | BAROM. PRESS. IN. HG. |
| PART NAME & NUMBER | TEST MEDIUM | WET BULB TEMP. |
| MANUFACTURER | TEST TEMP. C. ☐ F. ☐ | DRY BULB TEMP. |
| ENGINEER N.D. Wistanen | TECHNICIAN D. Harris | INSPECTOR |
| REF. SPEC. | | DATA SHEET NUMBER 2 |

JOB NUMBER _____ PAGE OF TEST REPORT NO. _____

601-2

GENERAL PRECISION, INC.
LIBRASCOPE GROUP

# ENVIRONMENTAL LABORATORY DATA SHEET

TEST CONDITIONS:
IF RETEST CHECK ☐

| | SECTION #1 NANO SECOND | | | | SECTION #2 NANO SECOND | | | |
|---|---|---|---|---|---|---|---|---|
| SAMPLE NUMBER | $t_{ON}$ | $t_{OFF}$ | $t_R$ | $t_F$ | $t_{ON}$ | $t_{OFF}$ | $t_R$ | $t_F$ |
| 1 | 21 | 53 | 128 | 10 | 33 | 60 | 147 | 15 |
| 2 | 20 | 54 | 132 | 11 | 33 | 60 | 148 | 15 |
| 3 | 22 | 62 | 158 | 10 | 37 | 70 | 175 | 17 |
| 4 | 22 | 65 | 164 | 11 | 33 | 70 | 179 | 14 |
| 5 | 30 | 70 | 190 | 15 | 42 | 80 | 212 | 18 |
| SET-UP TIME (NS) / DIVISION | 10 | 100 | 100 | 10 | 10 | 100 | 100 | 10 |

| | | |
|---|---|---|
| TEST CONDUCTED FOR: NASA, OFFICE OF ADVANCED RESEARCH AND TECHNOLOGY | | DATE: 3-16-65 |
| TEST: INITIAL MEAS.-SWITCHING CHARACTERISTICS | SAMPLE NUMBER: NOTED | BAROM. PRESS. 29.93 IN. HG. |
| PART NAME & NUMBER: DTUL DUAL GATE - SL1519 | TEST MEDIUM: AIR | WET BULB TEMP. 60°F |
| MANUFACTURER: [redacted] A | TEST TEMP. 72° C. ☐ F. ☒ | DRY BULB TEMP. 72°F |
| ENGINEER: N. D. Wistrand | TECHNICIAN: D. Harris | INSPECTOR: |
| REF. SPEC. | | DATA SHEET NUMBER |

JOB NUMBER Ao-138-AE PAGE OF TEST REPORT NO. TR1-1188

601-2
1/64

GENERAL PRECISION, INC.
LIBRASCOPE GROUP

# ENVIRONMENTAL LABORATORY DATA SHEET

TEST CONDITIONS:
IF RETEST CHECK ☐

| | SECTION #1 NANO SECOND | | | | SECTION #2 NANO SECOND | | | |
|---|---|---|---|---|---|---|---|---|
| SAMPLE NUMBER | $t_{ON}$ | $t_{OFF}$ | $t_R$ | $t_F$ | $t_{ON}$ | $t_{OFF}$ | $t_R$ | $t_F$ |
| 6 | 20 | 60 | 145 | 9 | 33 | 64 | 161 | 13 |
| 7 | 21 | 60 | 151 | 11 | 35 | 62 | 157 | 17 |
| 8 | 20 | 51 | 132 | 9 | 32 | 60 | 145 | 13 |
| 9 | 28 | 74 | 196 | 12 | 46 | 81 | 222 | 20 |
| 10 | 25 | 70 | 188 | 11 | 40 | 75 | 201 | 16 |
| 11 | 31 | 80 | 223 | 16 | 49 | 86 | 239 | 24 |
| 12 | 28 | 70 | 193 | 12 | 44 | 80 | 214 | 18 |
| 13 | 18 | 50 | 120 | 9 | 31 | 55 | 135 | 14 |
| 14 | 22 | 55 | 140 | 12 | 34 | 60 | 147 | 16 |
| 15 | 27 | 71 | 192 | 13 | 44 | 80 | 218 | 20 |
| 16 | 27 | 75 | 203 | 12 | 44 | 81 | 221 | 18 |
| 17 | 23 | 61 | 158 | 12 | 38 | 70 | 175 | 17 |
| 18 | 20 | 50 | 130 | 10 | 31 | 55 | 135 | 14 |
| 19 | 22 | 57 | 149 | 11 | 34 | 60 | 150 | 16 |
| 20 | 26 | 70 | 200 | 11 | 43 | 77 | 212 | 18 |

| | | |
|---|---|---|
| TEST CONDUCTED FOR: NASA, OFFICE OF ADVANCED RESEARCH AND TECHNOLOGY | | DATE: 3-16-65 |
| TEST: INITIAL MEAS. - SWITCHING CHARACTERISTICS | SAMPLE NUMBER: NOTED | BAROM. PRESS. 29.93 IN. HG. |
| PART NAME & NUMBER: DT4L DUAL GATE - SL1519 | TEST MEDIUM: AIR | WET BULB TEMP. 60 |
| MANUFACTURER: [redacted] A | TEST TEMP. 72° C. ☐ F. ☒ | DRY BULB TEMP. 72 |
| ENGINEER: N. D. Wistanen | TECHNICIAN: D. Harris | INSPECTOR: |
| REF. SPEC. | | DATA SHEET NUMBER |

JOB NUMBER A0-138-AE PAGE OF TEST REPORT NO. TR1-1188

601-2
1/64

GENERAL PRECISION, INC.
LIBRASCOPE GROUP

# ENVIRONMENTAL LABORATORY DATA SHEET

TEST CONDITIONS:
IF RETEST CHECK ☐

| | SECTION #1 | | | | SECTION #2 | | | |
|---|---|---|---|---|---|---|---|---|
| | NANO SECOND | | | | NANO SECOND | | | |
| SAMPLE NUMBER | $t_{ON}$ | $t_{OFF}$ | $t_R$ | $t_F$ | $t_{ON}$ | $t_{OFF}$ | $t_R$ | $t_F$ |
| 21 | 25 | 68 | 192 | 11 | 42 | 74 | 211 | 18 |
| 22 | 20 | 60 | 158 | 8 | 33 | 70 | 175 | 14 |
| 23 | 19 | 50 | 130 | 9 | 31 | 56 | 139 | 14 |
| 24 | 18 | 63 | 154 | 8 | 32 | 70 | 168 | 13 |
| 25 | 18 | 64 | 156 | 8 | 32 | 70 | 172 | 13 |
| 26 | 21 | 55 | 141 | 11 | 34 | 60 | ~~150~~ 153 | 16 |
| 27 | 26 | 70 | 197 | 13 | 41 | 75 | 203 | 19 |
| 28 | 22 | 60 | 152 | 11 | 37 | 63 | 165 | 17 |
| 29 | 23 | 60 | 157 | 11 | 37 | 62 | 171 | 17 |
| 30 | 23 | 60 | 165 | 12 | 38 | 66 | 180 | 18 |
| 31 | 19 | 60 | 151 | 8 | 32 | 66 | 164 | 12 |
| 32 | 19 | 64 | 156 | 8 | 32 | 68 | 172 | 13 |
| 33 | 21 | 58 | 145 | 10 | 34 | 59 | 157 | 15 |
| 34 | 20 | 50 | 135 | 10 | 32 | 53 | 145 | 14 |
| 35 | 20 | 60 | 154 | 8 | 32 | 64 | 166 | 13 |

| | | |
|---|---|---|
| TEST CONDUCTED FOR: NASA, OFFICE OF ADVANCED RESEARCH AND TECHNOLOGY | | DATE: 3-17-65 |
| TEST: INITIAL MEAS - SWITCHING CHARACTERISTICS | SAMPLE NUMBER: NOTED | BAROM. PRESS.: 29.88 IN. HG. |
| PART NAME & NUMBER: DTUL DUAL GATE - SL1519 | TEST MEDIUM: AIR | WET BULB TEMP.: 60 °F |
| MANUFACTURER: A | TEST TEMP.: 71 ° C. ☐ F. ☒ | DRY BULB TEMP.: 71 °F |
| ENGINEER: N. D. Wintermeyer | TECHNICIAN: D. Harris | INSPECTOR: |
| REF. SPEC. | | DATA SHEET NUMBER |

JOB NUMBER A0-138-AE PAGE OF TEST REPORT NO. TR1-1188

601-2
1/64

GENERAL PRECISION, INC.
LIBRASCOPE GROUP

# ENVIRONMENTAL LABORATORY DATA SHEET

TEST CONDITIONS:
IF RETEST CHECK ☐

| | SECTION #1 | | | | SECTION #2 | | | |
|---|---|---|---|---|---|---|---|---|
| | NANO SECOND | | | | NANO SECOND | | | |
| SAMPLE NUMBER | $t_{ON}$ | $t_{OFF}$ | $t_R$ | $t_F$ | $t_{ON}$ | $t_{OFF}$ | $t_R$ | $t_F$ |
| 1 | 20 | 50 | 134 | 10 | 32 | ~~53~~ 55 | 147 | 15 |
| 2 | 20 | 50 | 134 | 10 | 33 | 57 | 146 | 15 |
| 3 | 22 | 60 | 155 | 11 | 37 | 69 | 175 | 16 |
| 4 | 22 | 65 | 163 | 11 | 34 | 70 | 177 | 14 |
| 5 | 30 | 70 | 186 | 14 | 42 | 80 | 211 | 18 |

| | | |
|---|---|---|
| TEST CONDUCTED FOR: NASA, OFFICE OF ADVANCED RESEARCH AND TECHNOLOGY | | DATE: 3-17-65 |
| TEST: INITIAL MEAS.-SWITCHING CHARACTERISTICS | SAMPLE NUMBER: NOTED | BAROM. PRESS. 29.88 IN. HG. |
| PART NAME & NUMBER: DTUL DUAL GATE-SL1519 | TEST MEDIUM: AIR | WET BULB TEMP. 60 °F |
| MANUFACTURER: A | TEST TEMP. 71 C. ☐ F. ☒ | DRY BULB TEMP. 71 °F |
| ENGINEER: N. D. Winterson | TECHNICIAN: D. Harris | INSPECTOR: |
| REF. SPEC. | | DATA SHEET NUMBER |

JOB NUMBER A0-138-AE PAGE OF TEST REPORT NO. TR1-1188

601-2
1/64

GENERAL PRECISION, INC.
LIBRASCOPE GROUP

# ENVIRONMENTAL LABORATORY DATA SHEET

GROUP III

TEST CONDITIONS:
IF RETEST CHECK ☐

| | SECTION #1 | | | | SECTION #2 | | | |
|---|---|---|---|---|---|---|---|---|
| | NANO | | SECOND | | NANO | | SECOND | |
| SAMPLE NUMBER | $t_{ON}$ | $t_{OFF}$ | $t_R$ | $t_F$ | $t_{ON}$ | $t_{OFF}$ | $t_R$ | $t_F$ |
| 36 | 23 | 60 | 155 | 11 | 38 | ~~60~~ 64 | 170 | 18 |
| 37 | 27 | 72 | 192 | 12 | 46 | 79 | 212 | 22 |
| 38 | 27 | 70 | 195 | 11 | 44 | 76 | 217 | 18 |
| 39 | 20 | 70 | 169 | 8 | 35 | 73 | 185 | 14 |
| 40 | 21 | 52 | 138 | 11 | 33 | 57 | 139 | 16 |
| 41 | 23 | 60 | 156 | 12 | 38 | 67 | 173 | 18 |
| 42 | 27 | 73 | 195 | 12 | 44 | 80 | 215 | 18 |
| 43 | 25 | 73 | 196 | 11 | 50 | 90 | 214 | 22 |
| 44 | 22 | ~~70~~ 60 | 155 | 10 | 36 | 67 | 173 | 16 |
| 45 | 19 | 65 | 154 | 8 | 32 | 70 | 168 | 12 |
| 46 | 25 | 70 | 183 | 11 | 40 | 75 | 197 | 17 |
| 47 | 21 | 59 | 138 | 10 | 33 | 60 | ~~150~~ 148 | 15 |
| 48 | 31 | 72 | 195 | 14 | 42 | 80 | 213 | 18 |
| 49 | 21 | 57 | 140 | 11 | 34 | 60 | 155 | 15 |
| 50 | 26 | 76 | 202 | 11 | 44 | 80 | 221 | 19 |

| | | |
|---|---|---|
| TEST CONDUCTED FOR: NASA, OFFICE OF ADVANCED RESEARCH AND TECHNOLOGY | | DATE: 3-18-65 |
| TEST: INITIAL MEAS.-SWITCHING CHARACTERISTICS | SAMPLE NUMBER: NOTED | BAROM. PRESS. 29.78 IN. HG. |
| PART NAME & NUMBER: DTYL DUAL GATE—SL1519 | TEST MEDIUM: AIR | WET BULB TEMP. 61°F |
| MANUFACTURER: A | TEST TEMP. 74° C. ☐ F. ☒ | DRY BULB TEMP. 74°F |
| ENGINEER: T. D. Wistrand | TECHNICIAN: D. Harris | INSPECTOR: |
| REF. SPEC.: | | DATA SHEET NUMBER: |

JOB NUMBER A0-138-AE PAGE OF TEST REPORT NO. TR1-1188

601-2
1/64

GENERAL PRECISION, INC.
LIBRASCOPE GROUP

# ENVIRONMENTAL LABORATORY DATA SHEET

TEST CONDITIONS:
IF RETEST CHECK ☐

| | SECTION #1 | | | | SECTION #2 | | | |
|---|---|---|---|---|---|---|---|---|
| | NANO SECOND | | | | NANO SECOND | | | |
| SAMPLE NUMBER | $t_{ON}$ | $t_{OFF}$ | $t_R$ | $t_F$ | $t_{ON}$ | $t_{OFF}$ | $t_R$ | $t_F$ |
| 51 | 26 | 80 | 215 | 11 | 43 | 85 | 226 | 18 |
| 52 | 31 | 71 | 192 | 15 | 43 | 80 | 212 | 18 |
| 53 | 27 | 74 | 195 | 12 | 43 | 80 | 213 | 18 |
| 54 | 28 | 64 | 154 | 11 | 33 ~~28~~ | 70 ~~65~~ | 173 | 13 |
| 55 | 19 | 60 | 149 | 8 | 33 | 68 | 164 | 14 |
| 56 | 20 | 50 | 126 | 9 | 32 | 55 | 136 | 14 |
| 57 | 24 | 68 | 174 | 11 | 40 | 74 | 195 | 16 |
| 58 | 20 | 50 | 129 | 10 | 31 | 55 | 134 | 14 |
| 59 | 31 | 70 | 187 | 14 | 43 | 79 | 204 | 17 |
| 60 | 26 | 70 | 186 | 12 | 41 | 77 | 203 | 18 |
| 61 | 20 | 70 | 170 | 9 | 35 | 75 | 192 | 14 |
| 62 | 23 | 60 | 157 | 11 | 37 | 63 | ~~157~~ 171 | 17 |
| 63 | 23 | 63 | 158 | 12 | 38 | 70 | 173 | 18 |
| 64 | 21 | 60 | 147 | 11 | 32 | 60 | 150 | 14 |
| 65 | 23 | 57 | 156 | 12 | 36 | 60 | 171 | 17 |

| | | |
|---|---|---|
| TEST CONDUCTED FOR: NASA, OFFICE OF ADVANCED RESEARCH AND TECHNOLOGY | | DATE: 3-18-65 |
| TEST: INITIAL ~~MOS~~-SWITCHING CHARACTERISTICS | SAMPLE NUMBER: NOTED | BAROM. PRESS.: 29.78 IN. HG. |
| PART NAME & NUMBER: DTL DUAL GATE - SL1519 | TEST MEDIUM: AIR | WET BULB TEMP.: 61 °F |
| MANUFACTURER: A | TEST TEMP.: 74° C. ☐ F. ☒ | DRY BULB TEMP.: 74 °F |
| ENGINEER: N. D. Wistanley | TECHNICIAN: D. Harris | INSPECTOR: |
| REF. SPEC.: | | DATA SHEET NUMBER: |

JOB NUMBER A0-138-AE PAGE OF TEST REPORT NO. TR1-1188

601-2
1/64

GENERAL PRECISION, INC.
LIBRASCOPE GROUP

# ENVIRONMENTAL LABORATORY DATA SHEET

TEST CONDITIONS
IF RETEST CHECK ☐

GROUP I

| | SECTION #1 | | | | SECTION #2 | | | |
|---|---|---|---|---|---|---|---|---|
| | NANO SECOND | | | | NANO SECOND | | | |
| SAMPLE NUMBER | $t_{on}$ | $t_{off}$ | $t_r$ | $t_s$ | $t_{on}$ | $t_{off}$ | $t_r$ | $t_s$ |
| 1 | 19 | 50 | 128 | 10 | 31 | 50 | 144 | 14 |
| 2 | 19 | 40 | 130 | 11 | 31 | 45 | 142 | 14 |
| 3 | 19 | 60 | 156 | 10 | 35 | 60 | 166 | 16 |
| 4 | 21 | 50 | 160 | 12 | 32 | 60 | 162 | 14 |
| 5 | 29 | 65 | 182 | 13 | 40 | 68 | 210 | 18 |

| | | |
|---|---|---|
| TEST CONDUCTED FOR: NASA, OFFICE OF ADVANCED RESEARCH AND TECHNOLOGY | | DATE: 4-5-65 |
| TEST: INITIAL MEAS. SWITCHING CHARACTERISTICS | SAMPLE NUMBER: NOTED | BAROM. PRESS. IN HG. |
| PART NAME & NUMBER: DTUL DUAL GATE - SL1519 | TEST MEDIUM: AIR | WET BULB TEMP. 64° F |
| MANUFACTURER: A | TEST TEMP. 74 C. ☐ F. ☒ | DRY BULB TEMP. 74° F |
| ENGINEER | TECHNICIAN: D. Harris | INSPECTOR |
| REF. SPEC. | | DATA SHEET NUMBER |

JOB NUMBER A0-138-AE PAGE OF TEST REPORT NO. TR1-1188

6012
1/64

GENERAL PRECISION, INC.
LIBRASCOPE GROUP

# ENVIRONMENTAL LABORATORY DATA SHEET

TEST CONDITIONS:
IF RETEST CHECK ☐

| | SECTION #1 | | | | SECTION #2 | | | |
|---|---|---|---|---|---|---|---|---|
| | NANO SECOND | | | | NANO SECOND | | | |
| SAMPLE NUMBER | $t_{on}$ | $t_{OFF}$ | $t_r$ | $t_f$ | $t_{on}$ | $t_{off}$ | $t_r$ | $t_f$ |
| 66 | 19 | 58 | 175 | 10 | 34 | 63 | 195 | 21 |
| 67 | 20 | 56 | 157 | 11 | 33 | 61 | 173 | 20 |
| 68 | 19 | 65 | 176 | 10 | 34 | 66 | 201 | 20 |
| 69 | 19 | 58 | 171 | 10 | 32 | 59 | 183 | 18 |
| 70 | 22 | 60 | 195 | 11 | 37 | 60 | 212 | 22 |
| 71 | 17 | 50 | 162 | 9 | 30 | 51 | 184 | 18 |
| 72 | 25 | 60 | 193 | 13 | 41 | 75 | 222 | 24 |
| 73 | 21 | 46 | 162 | 12 | 36 | 62 | 183 | 24 |
| 74 | 25 | 65 | 220 | 13 | 42 | 80 | 246 | 25 |
| 75 | 41 | 55 | 186 | 26 | 40 | 65 | 230 | 24 |
| 76 | 19 | 52 | 170 | 10 | 32 | 67 | 195 | 20 |
| 77 | 17 | 55 | 146 | 8 | 30 | 60 | 180 | 18 |
| 78 | 18 | 40 | 132 | 11 | 30 | 59 | 150 | 20 |
| 79 | 25 | 52 | 182 | 12 | 39 | 75 | 220 | 22 |
| 80 | 24 | 58 | 183 | 12 | 38 | 66 | 221 | 22 |

| | | |
|---|---|---|
| TEST CONDUCTED FOR: NASA, OFFICE OF ADVANCED RESEARCH AND TECHNOLOGY | | DATE: 4-6-65 |
| TEST: INITIAL MICRO-SWITCHING CHARACTERISTICS | SAMPLE NUMBER: NOTED | BAROM PRESS.: -30.21 IN. HG |
| PART NAME & NUMBER: DTUL DUAL GATE - SL1519 | TEST MEDIUM: AIR | WET BULB TEMP.: 64°F |
| MANUFACTURER: A | TEST TEMP.: 74° C. ☐ F. ☒ | DRY BULB TEMP.: 74°F |
| ENGINEER | TECHNICIAN: D. Harris | INSPECTOR |
| REF. SPEC. | | DATA SHEET NUMBER |

JOB NUMBER AO-138-AE PAGE OF TEST REPORT NO. TR1-1188

601 2
1/64

GENERAL PRECISION, INC.
LIBRASCOPE GROUP

# ENVIRONMENTAL LABORATORY DATA SHEET

TEST CONDITIONS:
IF RETEST CHECK ☐

| | SECTION #1 | | | | SECTION #2 | | | |
|---|---|---|---|---|---|---|---|---|
| | NANO SECOND | | | | NANO SECOND | | | |
| SAMPLE NUMBER | $t_{on}$ | $t_{off}$ | $t_r$ | $t_s$ | $t_{on}$ | $t_{off}$ | $t_r$ | $t_s$ |
| 81 | 20 | 48 | 142 | 14 | 31 | 59 | 168 | 22 |
| 82 | 22 | 46 | 168 | 13 | 35 | 63 | 190 | 22 |
| 83 | 20 | 48 | 161 | 12 | 35 | 58 | 185 | 22 |
| 84 | 18 | 47 | 148 | 10 | 31 | 60 | 178 | 18 |
| 85 | 20 | 58 | 150 | 17 | 32 | 55 | 167 | 21 |
| 86 | 18 | 47 | 133 | 10 | 35 | 54 | 152 | 23 |
| 87 | 25 | 58 | 190 | 13 | 41 | 77 | 222 | 26 |
| 88 | 18 | 43 | 147 | 10 | 31 | 59 | 180 | 19 |
| 89 | 25 | 58 | 198 | 12 | 42 | 80 | 228 | 26 |
| 90 | 21 | 57 | 155 | 14 | 33 | 60 | 177 | 22 |
| 91 | 21 | 48 | 150 | 17 | 32 | 58 | 166 | 20 |
| 92 | 25 | 53 | 204 | 14 | 44 | 77 | 224 | 28 |
| 93 | 18 | 47 | 134 | 11 | | | | |
| 94 | 17 | 60 | 166 | 8 | 32 | 66 | 196 | 20 |
| 95 | 18 | 50 | 156 | 10 | 31 | 58 | 172 | 18 |

| | | |
|---|---|---|
| TEST CONDUCTED FOR: NASA, OFFICE OF ADVANCED RESEARCH AND TECHNOLOGY | | DATE: 4-6-65 |
| TEST: INITIAL MEAS. - SWITCHING CHARACTERISTICS | SAMPLE NUMBER: NOTED | BAROM. PRESS. IN. HG. |
| PART NAME & NUMBER: DTL DUAL GATE - SL1519 | TEST MEDIUM: AIR | WET BULB TEMP. 64 °F |
| MANUFACTURER: A | TEST TEMP. 74 C. ☐ F. ☒ | DRY BULB TEMP. 74 °F |
| ENGINEER | TECHNICIAN: D. Harris | INSPECTOR |
| REF. SPEC. | | DATA SHEET NUMBER |

JOB NUMBER A0-138-AE PAGE OF TEST REPORT NO. TR1-1188

601 2
1/64

GENERAL PRECISION, INC.
LIBRASCOPE GROUP

# ENVIRONMENTAL LABORATORY DATA SHEET

TEST CONDITIONS:
IF RETEST CHECK ☐

| | SECTION #1 | | | | SECTION #2 | | | |
|---|---|---|---|---|---|---|---|---|
| | NANO SECOND | | | | NANO SECOND | | | |
| SAMPLE NUMBER | $t_{on}$ | $t_{off}$ | $t_r$ | $t_f$ | $t_{on}$ | $t_{off}$ | $t_r$ | $t_f$ |
| 96 | 17 | 58 | 150 | 8 | 31 | 57 | 179 | 19 |
| 97 | 25 | 63 | 200 | ~~24~~ 14 | 40 | 74 | 230 | 24 |
| 98 | 19 | 50 | 150 | 12 | 31 | 51 | 162 | 20 |
| 99 | 26 | 66 | 202 | 14 | 45 | 77 | 242 | 27 |
| 100 | 17 | ~~60~~ 56 | 168 | 8 | 32 | 64 | 194 | 20 |
| 101 | 20 | ~~58~~ 48 | 164 | 12 | 35 | 59 | 183 | 22 |
| 102 | 24 | 68 | 210 | 12 | 40 | 70 | 232 | 24 |
| 103 | 22 | 60 | 180 | 12 | 36 | 64 | 202 | 20 |
| 104 | 19 | 46 | 150 | 10 | 31 | 55 | 173 | 20 |
| 105 | ~~18~~ 17 | 48 | 144 | 10 | 30 | 50 | 163 | 18 |
| 106 | 26 | 58 | 200 | 14 | 41 | 68 | 228 | 24 |
| 107 | 17 | 53 | 160 | 8 | 31 | 55 | 182 | 19 |
| 108 | 23 | 54 | 180 | 14 | 38 | 63 | 200 | 25 |
| 109 | 25 | 66 | 210 | 12 | 41 | 78 | 244 | 26 |
| 110 | 20 | 58 | 166 | 10 | 34 | 57 | 183 | 22 |
| 111 | 27 | 60 | 200 | 16 | 44 | 75 | 238 | 26 |
| 112 | 25 | 68 | 220 | 14 | 42 | 77 | 248 | 26 |
| 113 | 24 | 57 | 174 | 15 | | | | |
| 114 | 21 | 60 | 172 | 12 | 35 | 60 | 192 | 22 |
| 115 | 25 | 60 | 198 | 13 | 45 | 76 | 220 | 29 |

TEST CONDUCTED FOR: NASA, OFFICE OF ADVANCED RESEARCH AND TECHNOLOGY
DATE: 4-6-65
TEST: INITIAL MOS - SWITCHING CHARACTERISTICS
SAMPLE NUMBER: NOTED
BAROM. PRESS. IN. HG.
PART NAME & NUMBER: DT4L DUAL GATE - SU619
TEST MEDIUM: AIR
WET BULB TEMP. 64°F
MANUFACTURER: A
TEST TEMP. 74° C. ☐ F. ☒
DRY BULB TEMP. 74°F
ENGINEER
TECHNICIAN: W. Harris
INSPECTOR
REF. SPEC.
DATA SHEET NUMBER

JOB NUMBER A0-138-AE PAGE OF TEST REPORT NO. TR1-1188

601-2
1/64

GENERAL PRECISION, INC
LIBRASCOPE GROUP

# ENVIRONMENTAL LABORATORY DATA SHEET

GROUP I - INSTRUMENTATION CONTROL

CALIBRATION CHECK - BREAKDOWN VOLTAGE AT 1UA

| CALIBRATION RESISTOR | VOLTAGE - FULL SCALE = 100 VOLTS | | |
|---|---|---|---|
| 20 MEG | 2000 ' | 2000 ' | 2000 ' |
| 10 MEG | 0999 ' | 0999 ' | 0999 ' |
| 5 MEG | 0499 ' | 0500 ' | 0500 ' |

| SAMPLE NUMBER | VOLTAGE - FULL SCALE = 10 VOLTS | | | |
|---|---|---|---|---|
| | BV1 | BV2 | BV8 | BV9 |
| 1 | 4775 ' | 6050 ' | 5213 ' | 5440 ' |
| 2 | 6047 ' | 6036 ' | 5122 ' | 5502 ' |
| 3 | 5743 ' | 6186 ' | 5535 ' | 5349 ' |
| 4 | 6077 ' | 6077 ' | 5460 ' | 5621 ' |
| 5' | 5238 ' | 5125 ' | 5192 ' | 5158 ' |

| | | |
|---|---|---|
| TEST CONDUCTED FOR NASA, OFFICE OF ADVANCED RESEARCH AND TECHNOLOGY | | DATE 3-31-65 |
| TEST INITIAL MEAS.- D.C. PARAMETER CHARACTERISTICS | SAMPLE NUMBER NOTED | BAROM. PRESS IN HG. |
| PART NAME & NUMBER DTYL DUAL GATE - SL1519 | TEST MEDIUM AIR | WET BULB TEMP 61°F |
| MANUFACTURER A | TEST TEMP. 70° C. F. | DRY BULB TEMP. 70°F |
| ENGINEER | TECHNICIAN | INSPECTOR |
| REF. SPEC. | | DATA SHEET NUMBER |

JOB NUMBER AA-138-AF PAGE OF TEST REPORT NO. TR1-1188

601-2
1/64

GENERAL PRECISION, INC
LIBRASCOPE GROUP

# ENVIRONMENTAL LABORATORY DATA SHEET

GROUP II - LIFE TEST GROUP

| SAMPLE NUMBER | BV1 | VOLTAGE - FULL SCALE = 10 VOLTS BV2 | BV8 | BV9 |
|---|---|---|---|---|
| 6 | 6080 ' | 5959 ' | 5031 ' | 5699 ' |
| 7 | 4935 ' | 5573 ' | 5437 ' | 5508 ' |
| 8 | 5767 ' | 5749 ' | 5312 ' | 5446 ' |
| 9 | 6039 ' | 6249 ' | 5919 ' | 5895 ' |
| 10 | 6314 ' | 6367 ' | 5153 ' | 5459 ' |
| 11 | 6333 ' | 6141 ' | 5825 ' | 5452 ' |
| 12 | 6374 ' | 5746 ' | 5171 ' | 5708 ' |
| 13 | 5435 ' | 5937 ' | 5442 ' | 5452 ' |
| 14 | 4509 ' | 6011 ' | 5297 ' | 5165 ' |
| 15 | 5701 ' | 6217 ' | 5420 ' | 5019 ' |
| 16 | 6038 ' | 6091 ' | 5686 ' | 5707 ' |
| 17 | 5794 ' | 6261 ' | 5151 ' | 5751 ' |
| 18 | 5987 ' | 6046 ' | 5374 ' | 5464 ' |
| 19 | 5416 ' | 5556 ' | 5101 ' | 5384 ' |
| 20 | 6313 ' | 6003 ' | 5806 ' | 5657 ' |
| 21 | 6330 ' | 6005 ' | 4862 ' | 5615 ' |
| 22 | 5834 ' | 6126 ' | 5202 ' | 5649 ' |
| 23 | 5786 ' | 6266 ' | 5483 ' | 5140 ' |
| 24 | 6326 ' | 6336 ' | 5847 ' | 5782 ' |
| 25 | 6347 ' | 6298 ' | 5287 ' | 5848 ' |

| | | |
|---|---|---|
| TEST CONDUCTED FOR: NASA, OFFICE OF ADVANCED RESEARCH AND TECHNOLOGY | | DATE: 3-31-65 |
| TEST: INITIAL MEAS - DC. PARAMETER CHARACTERISTICS | SAMPLE NUMBER: NOTED | BAROM. PRESS: IN. HG. |
| PART NAME & NUMBER: DTL NAND/NOR GATE - SL 1519 | TEST MEDIUM: AIR | WET BULB TEMP: 63°F |
| MANUFACTURER: A | TEST TEMP: 74° C. ☐ F. ☒ | DRY BULB TEMP: 74°F |
| ENGINEER | TECHNICIAN | INSPECTOR |
| REF. SPEC. | | DATA SHEET NUMBER |

JOB NUMBER Ao-138-AE PAGE OF TEST REPORT NO. TR1-1188

621-2
1/64

GENERAL PRECISION, INC
LIBRASCOPE GROUP

# ENVIRONMENTAL LABORATORY DATA SHEET

## GROUP II - LIFE TEST GROUP

VOLTAGE - FULL SCALE = 10 VOLTS

| SAMPLE NUMBER | BV1 | BV2 | BV8 | BV9 |
|---|---|---|---|---|
| 26 | 6041 ' | 5659 ' | 5471 ' | 5481 ' |
| 27 | 5804 ' | 6324 ' | 5489 ' | 5562 ' |
| 28 | 5829 ' | 5445 ' | 5150 ' | 5466 ' |
| 29 | 5995 ' | 6270 ' | 5415 ' | 5335 ' |
| 30 | 5637 ' | 6277 ' | 5422 ' | 5416 ' |
| 31 | 6416 ' | 6422 ' | 5643 ' | 5798 ' |
| 32 | 6361 ' | 5747 ' | 5771 ' | 4962 ' |
| 33 | 5840 ' | 6082 ' | 5202 ' | 5748 ' |
| 34 | 5886 ' | 6030 ' | 4929 ' | 5411 ' |
| 35 | 4742 ' | 6263 ' | 5062 ' | 5872 ' |
| 36 | 5939 ' | 6191 ' | 5777 ' | 5289 ' |
| 37 | 5842 ' | 5804 ' | 4922 ' | 5890 ' |
| 38 | 6292 ' | 5906 ' | 5302 ' | 5737 ' |
| 39 | 5990 ' | 6362 ' | 5857 ' | 5830 ' |
| 40 | 5681 ' | 5231 ' | 5455 ' | 5724 ' |
| 41 | 5733 ' | 5989 ' | 4495 ' | 4599 ' |
| 42 | 5316 ' | 5879 ' | 5629 ' | 5379 ' |
| 43 | 5910 ' | 6393 ' | 5435 ' | 5713 ' |
| 44 | 5302 ' | 6046 ' | 5749 ' | 5651 ' |
| 45 | 6239 ' | 6399 ' | 5641 ' | 5850 ' |

## CALIBRATION CHECK

VOLTAGE - FULL SCALE = 10 VOLTS

| PROGRAM RESISTOR | | | | |
|---|---|---|---|---|
| 20 MEG | 2000 ' | 1999 ' | 1998 ' | 1998 ' |
| 10 MEG | 0997 ' | 0997 ' | 0999 ' | 0998 ' |
| 5 MEG' | 0499 ' | 0500 ' | 0500 ' | 0499 ' |

| | | |
|---|---|---|
| TEST CONDUCTED FOR: NASA, OFFICE OF ADVANCED RESEARCH AND TECHNOLOGY | | DATE: 3-31-65 |
| TEST: INITIAL MEAS-DC PARAMETER CHARACTERISTICS | SAMPLE NUMBER: NOTED | BAROM. PRESS: IN. HG. |
| PART NAME & NUMBER: DTL NAND/NOR GATE - SL 1519 | TEST MEDIUM: AIR | WET BULB TEMP: 63° F |
| MANUFACTURER: A | TEST TEMP: 74° C. ☐ F. ☑ | DRY BULB TEMP: 74° F |
| ENGINEER | TECHNICIAN | INSPECTOR |
| REF. SPEC. | | DATA SHEET NUMBER |

JOB NUMBER A0-138-AE PAGE OF TEST REPORT NO. TR1-1188

GENERAL PRECISION, INC
LIBRASCOPE GROUP

# ENVIRONMENTAL LABORATORY DATA SHEET

GROUP I - INSTRUMENTATION CONTROL

CALIBRATION CHECK - BREAKDOWN VOLTAGE AT 1UA

| CALIBRATION RESISTOR | VOLTAGE - FULL SCALE = 100 VOLTS | | | |
|---|---|---|---|---|
| 20 MEG | 1999 ' | 1999 ' | 1998 ' | 1998 ' |
| 10 MEG | 0998 ' | 0998 ' | 0998 ' | 0998 ' |
| 5 MEG | 0499 ' | 0499 ' | 0500 ' | 0499 ' |

| SAMPLE NUMBER | VOLTAGE - FULL SCALE = 10 VOLTS | | | |
|---|---|---|---|---|
| | BV1 | BV2 | BV8 | BV9 |
| 1 | 4759 ' | 6039 ' | 5199 ' | 5439 ' |
| 2 | 5999 ' | 6019 ' | 5199 ' | 5495 ' |
| 3 | 5749 ' | 6171 ' | 5535 ' | 5341 ' |
| 4 | 6059 ' | 6219 ' | 5455 ' | 5816 ' |
| 5' | 5218 ' | 5499 ' | 5176 ' | 5199 ' |

| | | |
|---|---|---|
| TEST CONDUCTED FOR: NASA OFFICE OF ADVANCED RESEARCH AND TECHNOLOGY | | DATE: 31 MAR 1965 |
| TEST: INITIAL MEAS. - D.C. PARAMETER CHARACTERISTICS | SAMPLE NUMBER: NOTED | BAROM. PRESS: MIL. HG. |
| PART NAME & NUMBER: DTL NAND/NOR GATE - SL1519 | TEST MEDIUM: AIR | WET BULB TEMP: 63°F |
| MANUFACTURER: A | TEST TEMP.: 74° C. ☐ F. ☒ | DRY BULB TEMP.: 74°F |
| ENGINEER | TECHNICIAN: J. Hayn | INSPECTOR |
| REF. SPEC. | | DATA SHEET NUMBER |

JOB NUMBER A0-138-AE PAGE OF TEST REPORT NO. TR1-1188

GPI 2
1/64

GENERAL PRECISION, INC
LIBRASCOPE GROUP

# ENVIRONMENTAL LABORATORY DATA SHEET

## GROUP I - INSTRUMENTATION CONTROL

CALIBRATION CHECK - BREAKDOWN VOLTAGE AT 1UA

| CALIBRATION RESISTOR | VOLTAGE - FULL SCALE = 100 VOLTS | | | |
|---|---|---|---|---|
| 20 MEG | 1998 ' | 1998 ' | 1998 ' | 1998 ' |
| 10 MEG | 0998 ' | 0998 ' | 0998 ' | 0998 ' |
| 5 MEG | 0499 ' | 0499 ' | 0499 ' | 0500 ' |

| SAMPLE NUMBER | VOLTAGE - FULL SCALE = 10 VOLTS | | | |
|---|---|---|---|---|
| | BV1 | BV2 | BV8 | BV9 |
| 1 | 4764 ' | 6044 ' | 5207 ' | 5448 ' |
| 2 | 6031 ' | 6053 ' | 5094 ' | 5499 ' |
| 3 | 5738 ' | 6174 ' | 5558 ' | 5342 ' |
| 4 | 6065 ' | 6221 ' | 5451 ' | 5809 ' |
| 5 | 5828 ' | 5519 ' | [illegible] ' | [illegible] ' |

| | | | |
|---|---|---|---|
| TEST CONDUCTED FOR: NASA OFFICE OF ADVANCED RESEARCH AND TECHNOLOGY | | | DATE: 31 MAR 1965 |
| TEST: INITIAL MEAS.- D.C. PARAMETER CHARACTERISTICS | SAMPLE NUMBER: NOTED | | BAROM PRESS: IN HG |
| PART NAME & NUMBER: DTL NAND/NOR GATE - SL1519 | TEST MEDIUM: AIR | | WET BULB TEMP: 63°F |
| MANUFACTURER: A | TEST TEMP: 74° C F X | | DRY BULB TEMP: 74°F |
| ENGINEER | TECHNICIAN: S. Hayn | INSPECTOR | |
| REF SPEC | | DATA SHEET NUMBER | |

JOB NUMBER Ao-138-AE PAGE OF TEST REPORT NO TR1-1188

GENERAL PRECISION, INC
LIBRASCOPE GROUP

# ENVIRONMENTAL LABORATORY DATA SHEET

GROUP III - TEMP CYCLE STEP STRESS GROUP

VOLTAGE - FULL SCALE = 10 VOLTS

| SAMPLE NUMBER | BV1 | BV2 | BV8 | BV9 |
|---|---|---|---|---|
| 46 | 6292 ' | 6104 ' | 5755 ' | 5806 ' |
| 47 | 5947 ' | 5993 ' | 4712 ' | 5199 ' |
| 48 | 5882 ' | 4233 ' | 5688 ' | 5441 ' |
| 49 | 5520 ' | 5401 ' | 5431 ' | 5451 ' |
| 50 | 6342 ' | 6251 ' | 5609 ' | 5183 ' |
| 51 | 6422 ' | 6404 ' | 5400 ' | 5401 ' |
| 52 | 6162 ' | 5145 ' | 5816 ' | 5110 ' |
| 53 | 6135 ' | 5825 ' | 5345 ' | 5542 ' |
| 54 | 6285 ' | 6419 ' | 5856 ' | 5096 ' |
| 55 | 6326 ' | 6443 ' | 5844 ' | 5799 ' |
| 56 | 5842 ' | 5962 | 5276 ' | 5525 ' |
| 57 | 5952 ' | 6016 ' | 5613 ' | 5845 ' |
| 58 | 5879 ' | 5974 ' | 4976 ' | 4671 ' |
| 59 | 5296 ' | 4391 ' | 5113 ' | 5365 ' |
| 60 | 5995 ' | 6380 ' | 5792 ' | 5680 ' |
| 61 | 6237 ' | 6418 ' | 5476 ' | 5834 ' |
| 62 | 6131 ' | 6137 ' | 5757 ' | 5384 ' |
| 63 | 6335 ' | 6282 ' | 5619 ' | 5341 ' |
| 64 | 6223 ' | 5788 ' | 5568 ' | 5378 ' |
| 65' | 5619 ' | 6258 ' | 5510 ' | 5595 ' |

| | | |
|---|---|---|
| TEST CONDUCTED FOR: NASA, OFFICE OF ADVANCED RESEARCH AND TECHNOLOGY | | DATE: 31 MAR 1965 |
| TEST: INITIAL MEAS-DC. PARAMETER CHARACTERISTICS | SAMPLE NUMBER: NOTED | BAROM. PRESS: IN HG |
| PART NAME & NUMBER: DTL NAND/NOR GATE - SL 1519 | TEST MEDIUM: AIR | WET BULB TEMP: 63°F |
| MANUFACTURER: A | TEST TEMP: 74° C. F. | DRY BULB TEMP: 74°F |
| ENGINEER | TECHNICIAN | INSPECTOR |
| REF SPEC | | DATA SHEET NUMBER |

JOB NUMBER A0-138-AE PAGE OF TEST REPORT NO TR1-1188

GENERAL PRECISION INC
LIBRASCOPE GROUP

# ENVIRONMENTAL LABORATORY DATA SHEET

GROUP IV - TEMP STEP STRESS GROUP

| SAMPLE NUMBER | BV1 | VOLTAGE - FULL SCALE = 10 VOLTS BV2 | BV8 | BV9 |
|---|---|---|---|---|
| 66 | 6308 ' | 6427 ' | 5699 ' | 5860 ' |
| 67 | 6248 ' | 6345 ' | 5719 ' | 5860 ' |
| 68 | 5589 ' | 6278 ' | 5829 ' | 5796 ' |
| 69 | 6043 ' | 6544 ' | 5986 ' | 5999 ' |
| 70 | 6164 ' | 6315 ' | 5719 ' | 5748 ' |
| 71 | 6411 ' | 6225 ' | 5519 ' | 5856 ' |
| 72 | 5879 ' | 5717 ' | 5222 ' | 5276 ' |
| 73 | 4391 ' | 6256 ' | 5599 ' | 4995 ' |
| 74 | 6326 ' | 5789 ' | 5356 ' | 5542 ' |
| 75 | 5599 ' | 5275 ' | 5799 ' | 5516 ' |
| 76 | 6596 ' | 5785 ' | 3700 ' | 5709 ' |
| 77 | 6409 ' | 6198 ' | 5878 ' | 5879 ' |
| 78 | 6021 ' | 5537 ' | 5182 ' | 4940 ' |
| 79 | 6069 ' | 5989 ' | 5611 ' | 5769 ' |
| 80' | 6159 ' | 6379 ' | 5766 ' | 5546 ' |

| | | |
|---|---|---|
| TEST CONDUCTED FOR: NASA OFFICE OF ADVANCED RESEARCH AND TECHNOLOGY | | DATE: 31 MAR 1965 |
| TEST: INITIAL MEAS. D.C. PARAMETER CHARATERISTICS | SAMPLE NUMBER: NOTED | BAROM. PRESS: IN. HG |
| PART NAME & NUMBER: DTL NAND/NOR GATE — SL1519 | TEST MEDIUM: AIR | WET BULB TEMP: 63°F |
| MANUFACTURER: A | TEST TEMP.: 74° C. ☐ R. ☒ | DRY BULB TEMP.: 74° F. |
| ENGINEER | TECHNICIAN: S. Hayn | INSPECTOR |
| REF. SPEC. | | DATA SHEET NUMBER |

JOB NUMBER A0-138-AE PAGE OF TEST REPORT NO. TR1-1188

601-8
1/64

GENERAL PRECISION, INC
LIBRASCOPE GROUP

# ENVIRONMENTAL LABORATORY DATA SHEET

GROUP IV - TEMP STEP STRESS GROUP

| SAMPLE NUMBER | VOLTAGE - FULL SCALE = 10 VOLTS BV1 | BV2 | BV8 | BV9 |
|---|---|---|---|---|
| 81 | 5364 ' | 5767 ' | 5241 ' | 5177 ' |
| 82 | 5412 ' | 6047 ' | 5539 ' | 5679 ' |
| 83 | 6255 ' | 5865 ' | 5536 ' | 5549 ' |
| 84 | 6509 ' | 5999 ' | 5969 ' | 5959 ' |
| 85 | 5529 ' | 5919 ' | 5353 ' | 5282 ' |
| 86 | 6069 ' | 5735 ' | 5509 ' | 4699 ' |
| 87 | 6159 ' | 5879 ' | 5590 ' | 5849 ' |
| 88 | 6399 ' | 6299 ' | 5229 ' | 5659 ' |
| 89 | 5999 ' | 5912 ' | 5750 ' | 5689 ' |
| 90 | 5930 ' | 5379 ' | 5149 ' | 5099 ' |
| 91 | 5949 ' | 5419 ' | 5435 ' | 5419 ' |
| 92 | 5959 ' | 6328 ' | 5334 ' | 5232 ' |
| 93 | 6092 ' | 6042 ' | 5517 ' | 5498 ' |
| 94 | 6268 ' | 6359 ' | 5855 ' | 5795 ' |
| 95 | 6019 ' | 6154 ' | 5630 ' | 5759 ' |
| 96 | 6349 ' | 6365 ' | 5889 ' | 5899 ' |
| 97 | 5569 ' | 4814 ' | 5024 ' | 5373 ' |
| 98 | 6059 ' | 6025 ' | 5359 ' | 5049 ' |
| 99 | 5853 ' | 6088 ' | 5845 ' | 5719 ' |
| 100' | 3926 ' | 5959 ' | 5839 ' | 5825 ' |

| | | |
|---|---|---|
| TEST CONDUCTED FOR: NASA OFFICE OF ADVANCED RESEARCH AND TECHNOLOGY | | DATE: 31 MAR 1965 |
| TEST: INITIAL MEAS. - D.C. PARAMETER CHARACTERISTICS | SAMPLE NUMBER: NOTED | BAROM. PRESS. (IN. HG) |
| PART NAME & NUMBER: DTL NAND/NOR GATE — SL1519 | TEST MEDIUM: AIR | WET BULB TEMP: 62°F |
| MANUFACTURER: A | TEST TEMP.: 740 C. ☐ F. ☒ | DRY BULB TEMP.: 74°F |
| ENGINEER | TECHNICIAN: S. Hayn | INSPECTOR |
| REF. SPEC. | | DATA SHEET NUMBER |

JOB NUMBER AO-139-AE PAGE OF TEST REPORT NO. TR1-1188

001-2
1/64

GENERAL PRECISION, INC
LIBRASCOPE GROUP

# ENVIRONMENTAL LABORATORY DATA SHEET

GROUP IV - TEMP STEP STRESS GROUP

| SAMPLE NUMBER | BV1 | BV2 | BV8 | BV9 |
|---|---|---|---|---|
| | VOLTAGE - FULL SCALE = 10 VOLTS | | | |
| 101 | 6199 ' | 5569 ' | 5741 ' | 5567 ' |
| 102 | 6278 ' | 5639 ' | 5729 ' | 5755 ' |
| 103 | 6069 ' | 6460 ' | 5289 ' | 5651 ' |
| 104 | 4939 ' | 6119 ' | 5493 ' | 5488 ' |
| 105 | 5859 ' | 5929 ' | 5459 ' | 5749 ' |
| 106 | 5482 ' | 5685 ' | 5114 ' | 5306 ' |
| 107 | 5702 ' | 5719 ' | 5789 ' | 5920 ' |
| 108 | 5876 ' | 6175 ' | 4553 ' | 5210 ' |
| 109 | 6354 ' | 6299 ' | 5847 ' | 5788 ' |
| 110 | 6199 ' | 6305 ' | 5613 ' | 5291 ' |
| 111 | 6195 ' | 6174 ' | 5534 ' | 5518 ' |
| 112 | 6360 ' | 6359 ' | 5833 ' | 5799 ' |
| 113 | 6176 ' | 6154 ' | 5686 ' | 9820 ' |
| 114 | 6199 ' | 5919 ' | 5387 ' | 5448 ' |
| 115 | 6198 ' | 6175 ' | 5865 ' | 5790 ' |

CALIBRATION CHECK

| PROGRAM RESISTOR | | | | |
|---|---|---|---|---|
| | VOLTAGE - FULL SCALE = 100 VOLTS | | | |
| 20 MEG | 1998 ' | 1998 ' | 1999 ' | 1998 ' |
| 10 MEG | 0998 ' | 0998 ' | 0997 ' | 0998 ' |
| 5 MEG' | 0499 ' | 0500 ' | 0499 ' | 0499 ' |

| | | |
|---|---|---|
| TEST CONDUCTED FOR: NASA OFFICE OF ADVANCED RESEARCH AND TECHNOLOGY | | DATE: 31 MAR 1965 |
| TEST: INITIAL MEAS. - D.C. PARAMETERS CHARACTERISTICS | SAMPLE NUMBER: NOTED | BAROM PRESS: In. HG. |
| PART NAME & NUMBER: DTL NAND/NOR GATE — SL 1519 | TEST MEDIUM: AIR | WET BULB TEMP: 63°F |
| MANUFACTURER: A | TEST TEMP: 74° C. F. X | DRY BULB TEMP: 74°F |
| ENGINEER: | TECHNICIAN: S. Hayn | INSPECTOR: |
| REF. SPEC: | | DATA SHEET NUMBER: |

JOB NUMBER AO-138-AE PAGE OF TEST REPORT NO. TRI-1188

GENERAL PRECISION, INC
LIBRASCOPE GROUP

# ENVIRONMENTAL LABORATORY DATA SHEET

GROUP I - INSTRUMENTATION CONTROL

PARAMETER: LEAKAGE CURRENT NO. 1 AT 4 VOLTS
CALIBRATION CHECK WITH 10 MEG

| CALIBRATION VOLTAGE | CURRENT - FULL SCALE = 100NA | | | |
|---|---|---|---|---|
| 1.0 V | 1002 ' | 1001 ' | 1001 ' | 1002 ' |
| 0.5 V | 0495 ' | 0496 ' | 0498 ' | 0496 ' |

| SAMPLE NUMBER | LEAKAGE CURRENT - FULL SCALE = 100NA | | | |
|---|---|---|---|---|
| | I1 | I2 | I8 | I9 |
| 1 | 1670 ' | 0172 ' | 0588 ' | 0242 ' |
| 2 | 0196 ' | 0212 ' | 1668 ' | 0425 ' |
| 3 | 0531 ' | 0436 ' | 1349 ' | 1374 ' |
| 4 | 1425 ' | 0162 ' | 0138 ' | 0090 ' |
| 5' | 1669 ' | 1200 ' | 1664 ' | 1660 ' |

| | | |
|---|---|---|
| TEST CONDUCTED FOR: NASA, OFFICE OF ADVANCED RESEARCH AND TECHNOLOGY | | DATE 4-3-65 |
| TEST: INITIAL MEAS.-DC PARAMETER CHARACTERISTICS | SAMPLE NUMBER NOTED | BAROM PRESS IN HG |
| PART NAME & NUMBER: DTL NAND/NOR GATE - SL1519 | TEST MEDIUM AIR | WET BULB TEMP 61°F |
| MANUFACTURER: A | TEST TEMP 74° F C. F. | DRY BULB TEMP 74°F |
| ENGINEER | TECHNICIAN L. Hayn | INSPECTOR |
| REF. SPEC. | | DATA SHEET NUMBER |

JOB NUMBER Ao-138-AE PAGE OF TEST REPORT NO. TR1-1188

GENERAL PRECISION, INC
LIBRASCOPE GROUP

# ENVIRONMENTAL LABORATORY DATA SHEET

## GROUP II - LIFE TEST GROUP

PARAMETER: LEAKAGE CURRENT NO. 1 AT 4 VOLTS

CURRENT - FULL SCALE = 100NA

| SAMPLE NUMBER | I1 | I2 | I8 | I9 |
|---|---|---|---|---|
| 6 | 0742 ' | 0296 ' | 1665 ' | 0536 ' |
| 7 | 1668 ' | 0641 ' | 0689 ' | 0376 ' |
| 8 | 0509 ' | 1661 ' | 1472 ' | 1333 ' |
| 9 | 0749 ' | 0360 ' | 0226 ' | 0208 ' |
| 10 | 0075 ' | 0081 ' | 0811 ' | 0226 ' |
| 11 | 0223 ' | 0566 ' | 0575 ' | 0284 ' |
| 12 | 0200 ' | 0981 ' | 1663 ' | 0779 ' |
| 13 | 0983 ' | 0115 ' | 0329 ' | 0394 ' |
| 14 | 1669 ' | 0287 ' | 1149 ' | 1662 ' |
| 15 | 0399 ' | 0992 ' | 1252 ' | 1663 ' |
| 16 | 0218 ' | 0351 ' | 0622 ' | 0299 ' |
| 17 | 0306 ' | 0221 ' | 0516 ' | 0319 ' |
| 18 | 0408 ' | 0156 ' | 0723 ' | 0461 ' |
| 19 | 0993 ' | 1255 ' | 0725 ' | 0746 ' |
| 20 | 0165 ' | 0882 ' | 0335 ' | 0831 ' |
| 21 | 0152 ' | 0486 ' | 1214 ' | 0278 ' |
| 22 | 0105 ' | 0174 ' | 1036 ' | 0766 ' |
| 23 | 0723 ' | 0206 ' | 1308 ' | 0285 ' |
| 24 | 0126 ' | 0072 ' | 0093 ' | 0179 ' |
| 25' | 0178 ' | 0030 ' | 0221 ' | 0253 ' |

| | | |
|---|---|---|
| TEST CONDUCTED: NASA, OFFICE OF ADVANCED RESEARCH AND TECHNOLOGY | | DATE: 4-3-65 |
| TEST: INITIAL MEAS.-DC PARAMETER CHARACTERISTICS | SAMPLE NUMBER: NOTED | BAROM. PRESS. IN. HG. |
| PART NAME & NUMBER: DTL NAND/NOR GATE - SL1519 | TEST MEDIUM: AIR | WET BULB TEMP: 61°F |
| MANUFACTURER: A | TEST TEMP.: 740 F | CHAMBER TEMP: 74°F |
| ENGINEER | TECHNICIAN: L. Hayn | INSPECTOR |
| REF. SPEC. | | DATA SHEET |

JOB NUMBER AO-138-AE PAGE OF TEST REPORT NO. TR1-1188

GENERAL PRECISION, INC
LIBRASCOPE GROUP

# ENVIRONMENTAL LABORATORY DATA SHEET

## GROUP I - INSTRUMENTATION CONTROL

PARAMETER: LEAKAGE CURRENT NO. 1 AT 4 VOLTS
CALIBRATION CHECK WITH 10 MEG

| CALIBRATION VOLTAGE | CURRENT - FULL SCALE = 100NA | | | |
|---|---|---|---|---|
| 1.0 V | 0994' | 1001' | 1000' | 1002' |
| 0.5 V | 0496' | 0496' | 0499' | 0499' |

| SAMPLE NUMBER | LEAKAGE CURRENT - FULL SCALE = 100NA | | | |
|---|---|---|---|---|
| | I1 | I2 | I8 | I9 |
| 1 | 1668 ' | 0174 ' | 0588 ' | 0245 ' |
| 2 | 0189 ' | 0218 ' | 1668 ' | 0422 ' |
| 3 | 0510 ' | 0476 ' | 1250 ' | 1407 ' |
| 4 | 1422 ' | 0170 ' | 0156 ' | 0090 ' |
| 5' | 1670 ' | 1192 ' | 1666 ' | 1666 ' |

| | | |
|---|---|---|
| TEST CONDUCTED FOR: NASA, OFFICE OF ADVANCED RESEARCH AND TECHNOLOGY | | DATE 4-3-65 |
| TEST: INITIAL MEAS-DC PARAMETER CHARACTERISTICS | SAMPLE NUMBER NATED | BAROM PRESS IN. HG |
| PART NAME & NUMBER: DTL NAND/NOR GATE - SL1519 | TEST MEDIUM AIR | WET BULB TEMP 61°F |
| MANUFACTURER: A | TEST TEMP 74° X | DRY BULB TEMP 74°F |
| ENGINEER | TECHNICIAN J. Hayn | |
| REF SPEC | | DATA SHEET NUMBER |

JOB NUMBER AA-138-AE PAGE OF TEST REPORT NO. TR1-1188

GENERAL PRECISION, INC
LIBRASCOPE GROUP

# ENVIRONMENTAL LABORATORY DATA SHEET

## GROUP II - LIFE TEST GROUP

PARAMETER: LEAKAGE CURRENT NO. 1 AT 4 VOLTS

CURRENT - FULL SCALE = 100NA

| SAMPLE NUMBER | I1 | I2 | I8 | I9 |
|---|---|---|---|---|
| 26 | 0302 ' | 0519 ' | 0585 ' | 0632 ' |
| 27 | 0460 ' | 0108 ' | 0815 ' | 1299 ' |
| 28 | 0852 ' | 0837 ' | 1668 ' | 0734 ' |
| 29 | 0913 ' | 0228 ' | 1662 ' | 1412 ' |
| 30 | 1658 ' | 0191 ' | 1211 ' | 1146 ' |
| 31 | 0045 ' | 0033 ' | 0645 ' | 0178 ' |
| 32 | 0225 ' | 0047 ' | 0245 ' | 1175 ' |
| 33 | 0956 ' | 0491 ' | 1542 ' | 0818 ' |
| 34 | 0322 ' | 0143 ' | 0734 ' | 1293 ' |
| 35 | 0106 ' | 0039 ' | 0069 ' | 0076 ' |
| 36 | 0286 ' | 1334 ' | 0181 ' | 0820 ' |
| 37 | 1241 ' | 0670 ' | 1672 ' | 0168 ' |
| 38 | 0072 ' | 0069 ' | 0142 ' | 0122 ' |
| 39 | 0199 ' | 0086 ' | 0102 ' | 0136 ' |
| 40 | 1196 ' | 1666 ' | 0929 ' | 0880 ' |
| 41 | 0719 ' | 0535 ' | 1668 ' | 0519 ' |
| 42 | 1531 ' | 1238 ' | 0793 ' | 0251 ' |
| 43 | 0011 ' | 0089 ' | 1671 ' | 0379 ' |
| 44 | 0152 ' | 0136 ' | 0230 ' | 0453 ' |
| 45' | 0070 ' | 0039 ' | 0227 ' | 0107 ' |

## CALIBRATION CHECK - 100NA

| CALIBRATION VOLTAGE | | | | |
|---|---|---|---|---|
| 1.0 V | 1000 ' | 1001 ' | 0989 ' | 1000 ' |
| 0.5 V' | 0495 ' | 0499 ' | 0496 ' | 0499 ' |

| | | |
|---|---|---|
| TEST CONDUCTED FOR: NASA OFFICE OF ADVANCED RESEARCH AND TECHNOLOGY | | DATE 4-3-65 |
| TEST: INITIAL MEAS-DC PARAMETER CHARACTERISTICS | SAMPLE NUMBER: NOTED | BAROM. PRESS IN HG |
| PART NAME & NUMBER: DTL NAND/NOR GATE - SL1519 | TEST MEDIUM: AIR | WET BULB TEMP 61°F |
| MANUFACTURER: A | TEST TEMP 74°F C. F. | DRY BULB TEMP 74°F |
| ENGINEER | TECHNICIAN: L. Hayn | INSPECTOR |
| REF. SPEC | | DATA SHEET NUMBER |

JOB NUMBER AD-138-AF PAGE OF TEST REPORT NO. TR1-1188

GENERAL PRECISION, INC
LIBRASCOPE GROUP

# ENVIRONMENTAL LABORATORY DATA SHEET

## GROUP III - TEMP. CYCLE STEP STRESS

PARAMETER: LEAKAGE CURRENT NO. 1 AT 4 VOLTS

CURRENT - FULL SCALE = 100NA

| SAMPLE NUMBER | I1 | I2 | I8 | I9 | |
|---|---|---|---|---|---|
| 46 | 0197 ' | 0061 ' | 0295 ' | 0140 ' | |
| 47 | 0237 ' | 0451 ' | 1374 ' | 1620 ' | |
| 48 | 1653 ' | 1670 ' | 0836 ' | 1661 ' | |
| 49 | 1657 ' | 0839 ' | 0549 ' | 0325 ' | |
| 50 | 0118 ' | 0152 ' | 1283 ' | 1658 ' | |
| 51 | 0068 ' | 0098 ' | 1244 ' | 0222 ' | |
| 52 | 0272 ' | 1668 ' | 0515 ' | 1666 ' | |
| 53 | 1189 ' | 0616 ' | 1643 ' | 0895 ' | + |
| 54 | 0184 ' | 0084 ' | 0196 ' | 0442 ' | |
| 55 | 0105 ' | 0066 ' | 0165 ' | 0509 ' | |
| 56 | 0656 ' | 0371 ' | 1655 ' | 0330 ' | |
| 57 | 0182 ' | 1207 ' | 0121 ' | 0099 ' | |
| 58 | 0548 ' | 0308 ' | 1660 ' | 1668 ' | |
| 59 | 1665 ' | 1672 ' | 1665 ' | 1662 ' | |
| 60 | 0128 ' | 0076 ' | 0382 ' | 0367 ' | |
| 61 | 0042 ' | 0060 ' | 0315 ' | 0158 ' | |
| 62 | 0599 ' | 0182 ' | 0139 ' | 1046 ' | |
| 63 | 0081 ' | 0430 ' | 0566 ' | 0319 ' | |
| 64 | 0151 ' | 1655 ' | 0390 ' | 1534 ' | |
| 65 ' | 0238 ' | 0176 ' | 0822 ' | 0468 ' | |

CALIBRATION CHECK - 100NA

| CALIBRATION VOLTAGE | | | | | |
|---|---|---|---|---|---|
| 1.0 V | 1001 ' | 1003 ' | 1002 ' | 1002 ' | |
| 0.5 V ' | 0498 ' | 0495 ' | 0498 ' | 0495 ' | w |

| | | |
|---|---|---|
| TEST CONDUCTED FOR: NASA OFFICE OF ADVANCED RESEARCH AND TECHNOLOGY | | DATE 4-3-65 |
| TEST: INITIAL MEAS.-DC PARAMETER CHARACTERISTICS | SAMPLE NUMBER NOTED | BAROM PRESS IN. HG |
| PART NAME & NUMBER: DTL NAND/NOR GATE- SL1519 | TEST MEDIUM AIR | WET BULB TEMP 61°F |
| MANUFACTURER: A | TEST TEMP. 74° C. X | DRY BULB TEMP 74°F |
| ENGINEER | TECHNICIAN L. Hayn | INSPECTOR |
| REF SPEC | | DATA SHEET NUMBER |

JOB NUMBER Ao-138-AE PAGE OF TEST REPORT NO. TR1-1188

GENERAL PRECISION, INC
LIBRASCOPE GROUP

# ENVIRONMENTAL LABORATORY DATA SHEET

## GROUP I - INSTRUMENTATION CONTROL

PARAMETER: LEAKAGE CURRENT NO. 1 AT 4 VOLTS
CALIBRATION CHECK WITH 10 MEG

| CALIBRATION VOLTAGE | CURRENT - FULL SCALE = 100NA | | | |
|---|---|---|---|---|
| 1.0 V | 1000 ' | 1000 ' | 1001 ' | 1000 ' |
| 0.5 V | 0496 ' | 0495 ' | 0495 ' | 0499 ' |

| SAMPLE NUMBER | LEAKAGE CURRENT - FULL SCALE = 100NA | | | |
|---|---|---|---|---|
| | I1 | I2 | I8 | I9 |
| 1 | 1669 ' | 0169 ' | 0582 ' | 0239 ' |
| 2 | 0195 ' | 0203 ' | 1660 ' | 0420 ' |
| 3 | 0523 ' | 0459 ' | 1209 ' | 1434 ' |
| 4 | 1425 ' | 0164 ' | 0136 ' | 0089 ' |
| 5' | 1668 ' | 1223 ' | 1665 ' | 1660 ' |

| | | |
|---|---|---|
| TEST CONDUCTED FOR: NASA, OFFICE OF ADVANCED RESEARCH AND TECHNOLOGY | | DATE 4-3-65 |
| TEST: INITIAL MEAS-DC PARAMETER CHARACTERISTICS | SAMPLE NUMBER NOTED | BAROM PRESS IN. HG |
| PART NAME & NO.: DTL NAND/NOR GATE - SL 1519 | TEST MEDIUM AIR | WET BULB TEMP 61°F |
| MANUFACTURER A | TEST TEMP 74° F | DRY BULB TEMP 74°F |
| ENGINEER | TECHNICIAN L. Hayn | INSPECTOR |
| REF SPEC | | DATA SHEET NUMBER |

JOB NUMBER AO-138-AE PAGE OF TEST REPORT NO TR1-1188

GENERAL PRECISION, INC
LIBRASCOPE GROUP

# ENVIRONMENTAL LABORATORY DATA SHEET

## GROUP IV - TEMPERATURE STEP STRESS

PARAMETER: LEAKAGE CURRENT NO. 1 AT 4 VOLTS

CURRENT - FULL SCALE = 100NA

| SAMPLE NUMBER | I1 | I2 | I8 | I9 |
|---|---|---|---|---|
| 66 | 0156 ' | 0061 ' | 0164 ' | 0181 ' |
| 67 | 0164 ' | 0046 ' | 0350 ' | 0229 ' |
| 68 | 0470 ' | 0044 ' | 0179 ' | 0138 ' |
| 69 | 0148 ' | 0172 ' | 0532 ' | 0081 ' |
| 70 | 0336 ' | 0132 ' | 0243 ' | 0213 ' |
| 71 | 0101 ' | 0180 ' | 0189 ' | 0507 ' |
| 72 | 1387 ' | 1113 ' | 1661 ' | 0634 ' |
| 73 | 1670 ' | 0367 ' | 0428 ' | 1149 ' |
| 74 | 0200 ' | 1662 ' | 1469 ' | 0285 ' |
| 75 | 0971 ' | 1668 ' | 0246 ' | 0756 ' |
| 76 | 0069 ' | 1485 ' | 1672 ' | 1655 ' |
| 77 | 0042 ' | 0038 ' | 0058 ' | 0041 ' |
| 78 | 0279 ' | 0241 ' | 0441 ' | 1669 ' |
| 79 | 0445 ' | 0485 ' | 0841 ' | 0325 ' |
| 80' | 0151 ' | 0099 ' | 0735 ' | 1003 ' |

| | | |
|---|---|---|
| TEST CONDUCTED: NASA, OFFICE OF ADVANCED RESEARCH AND TECHNOLOGY | | DATE 4-3-65 |
| TEST: INITIAL MEAS-DC PARAMETER CHARACTERISTICS | SAMPLE NUMBER NOTED | BAROM PRESS IN. HG |
| PART NAME & NUMBER: DTL NAND/NOR GATE - SL1519 | TEST MEDIUM AIR | HUMID TEMP 61°F |
| MANUFACTURER: A | TEST TEMP. 74°F | CHAMBER TEMP 74°F |
| ENGINEER | TECHNICIAN S. Hayn | INSPECTOR |
| REF. SPEC. | | DATA SHEET |

JOB NUMBER AA-138-AE PAGE OF TEST REPORT NO. TR1-1188

GENERAL PRECISION, INC
LIBRASCOPE GROUP

# ENVIRONMENTAL LABORATORY DATA SHEET

## GROUP IV - TEMPERATURE STEP STRESS

PARAMETER: LEAKAGE CURRENT NO. 1 AT 4 VOLTS

CURRENT - FULL SCALE = 100NA

| SAMPLE NUMBER | I1 | I2 | I8 | I9 | |
|---|---|---|---|---|---|
| 81 | 1073 ' | 0970 ' | 0799 ' | 1662 ' | |
| 82 | 0392 ' | 0293 ' | 0761 ' | 0300 ' | |
| 83 | 0098 ' | 0446 ' | 0365 ' | 0729 ' | |
| 84 | 0036 ' | 0171 ' | 0106 ' | 0061 ' | |
| 85 | 1535 ' | 0936 ' | 0780 ' | 1085 ' | |
| 86 | 0202 ' | 1027 ' | 0328 ' | 1669 ' | |
| 87 | 0554 ' | 1666 ' | 1660 ' | 0405 ' | |
| 88 | 0119 ' | 0135 ' | 0223 ' | 0217 ' | |
| 89 | 0820 ' | 0915 ' | 0889 ' | 0551 ' | |
| 90 | 0515 ' | 1666 ' | 1503 ' | 1665 ' | |
| 91 | 0400 ' | 0991 ' | 0635 ' | 0575 ' | |
| 92 | 0233 ' | 0046 ' | 0712 ' | 1659 ' | |
| 93 | 0126 ' | 0166 ' | 0374 ' | 0312 ' | |
| 94 | 0225 ' | 0099 ' | 0119 ' | 0259 ' | |
| 95 | 0419 ' | 0425 ' | 0326 ' | 0259 ' | + |
| 96 | 0083 ' | 0049 ' | 0056 ' | 0117 ' | |
| 97 | 0596 ' | 1669 ' | 1663 ' | 1663 ' | |
| 98 | 0166 ' | 0520 ' | 1655 ' | 1666 ' | |
| 99 | 0366 ' | 0486 ' | 0390 ' | 0377 ' | |
| 100' | 0026 ' | 0797 ' | 0181' ' | 0170 ' | |

| | | |
|---|---|---|
| TEST CONDUCTED: NASA OFFICE OF ADVANCED RESEARCH AND TECHNOLOGY | | DATE 4-3-65 |
| TEST: INITIAL MEAS.-DC PARAMETER CHARACTERISTICS | SAMPLE NUMBER NOTED | BAROM PRESS IN HG |
| PART NAME & NUMBER: DTL NAND/NOR GATE — SL1519 | TEST MEDIUM AIR | WET BULB TEMP 61°F |
| MANUFACTURER: A | TEST TEMP 74° F C. F. | DRY BULB TEMP 74°F |
| ENGINEER | TECHNICIAN S. Hagen | INSPECTOR |
| REF SPEC | | DATA SHEET NUMBER |

JOB NUMBER AA-138-AE PAGE OF TEST REPORT NO. TR1-1188

GENERAL PRECISION, INC
LIBRASCOPE GROUP

# ENVIRONMENTAL LABORATORY DATA SHEET

## GROUP IV - TEMPERATURE STEP STRESS

PARAMETER: LEAKAGE CURRENT NO. 1 AT 4 VOLTS

CURRENT - FULL SCALE = 100NA

| SAMPLE NUMBER | I1 | I2 | I8 | I9 |
|---|---|---|---|---|
| 101 | 0339 ' | 1661 ' | 0423 ' | 0739 ' |
| 102 | 0003 ' | 1499 ' | 0632 ' | 0461 ' |
| 103 | 0180 ' | 0152 ' | 0500 ' | 0510 ' |
| 104 | 1349 ' | 0352 ' | 0753 ' | 1151 ' |
| 105 | 0844 ' | 0731 ' | 0832 ' | 0249 ' |
| 106 | 0285 ' | 1651 ' | 0925 ' | 1652 ' |
| 107 | 0300 ' | 0002 ' | 0388 ' | 0052 ' |
| 108 | 0600 ' | 0055 ' | 1668 ' | 1164 ' |
| 109 | 0142 ' | 0190 ' | 0163 ' | 0352 ' |
| 110 | 0084 ' | 0152 ' | 0294 ' | 1338 ' |
| 111 | 0385 ' | 0361 ' | 1666 ' | 0375 ' |
| 112 | 0037 ' | 0002 ' | 0246 ' | 0085 ' |
| 113 | 0315 ' | 0306 ' | 0537 ' | 0003 ' |
| 114 | 0176 ' | 0589 ' | 1359 ' | 0305 ' |
| 115' | 0239 ' | 0322 ' | 0402 ' | 0585 ' |

CALIBRATION CHECK - 100NA

| CALIBRATION VOLTAGE | | | | |
|---|---|---|---|---|
| 1.0 V | 0999 ' | 1001 ' | 1001 ' | 1001 ' |
| 0.5 V' | 0496 ' | 0498 ' | 0500 ' | 0497 ' |

| | | |
|---|---|---|
| TEST CONDUCTED: NASA, OFFICE OF ADVANCED RESEARCH AND TECHNOLOGY | | 4-3-65 |
| TEST: INITIAL MEAS.-DC PARAMETER CHARACTERISTICS | SAMPLE NUMBER: NOTED | |
| PART NAME & NUMBER: DTL NAND/NOR GATE - SL1519 | TEST MEDIUM: AIR | 61°F |
| MANUFACTURER: A | TEST TEMP.: 74° F | 74°F |
| ENGINEER: L. Harper | | |
| REF SPEC | DATA SHEET | |

JOB NUMBER AO-138-AE PAGE OF TEST REPORT NO. TR1-1188

GENERAL PRECISION, INC.
LIBRASCOPE GROUP

# ENVIRONMENTAL LABORATORY DATA SHEET

TEST CONDITIONS:
IF RETEST CHECK ☐ READINGS IN NANOAMPS

| | # | $I_1$ | $I_2$ | $I_3$ | $I_8$ | $I_9$ | | | |
|---|---|---|---|---|---|---|---|---|---|
| GROUP I | 1 | 265. | 10.3 | 10.2 | 48.9 | 19.2 | | | |
| | 2 | 10.9 | 11.2 | 11.7 | 189. | 35.9 | | | |
| | 3 | 27.6 | 25.5 | 40.2 | 108. | 129. | | | |
| | 4 | 102. | 9.7 | 189. | 15.9 | 8.2 | | | |
| | 5 | 276. | 97.1 | 43.0 | 181. | 171. | | | |

| | | |
|---|---|---|
| TEST CONDUCTED FOR: NASA, OFFICE OF ADVANCED RESEARCH AND TECHNOLOGY | | DATE: 4-6-65 |
| TEST: INITIAL MEAS-DC. PARAMETER CHARACTERISTICS | SAMPLE NUMBER: NOTED | BAROM. PRESS. 29.22 IN. HG. |
| PART NAME & NUMBER: DTL NAND/NOR GATE-SL1519 | TEST MEDIUM: AIR | WET BULB TEMP. 59°F |
| MANUFACTURER: A | TEST TEMP. 73°F C. ☐ F. ☐ | DRY BULB TEMP. 73°F |
| ENGINEER | TECHNICIAN: [illegible] | INSPECTOR |
| REF. SPEC. | | DATA SHEET NUMBER |

JOB NUMBER AA-138-AE PAGE OF TEST REPORT NO. TR1-1188

601-2
1/64

GENERAL PRECISION, INC.
LIBRASCOPE GROUP

# ENVIRONMENTAL LABORATORY DATA SHEET

TEST CONDITIONS:
IF RETEST CHECK ☐

READINGS IN NANOAMPS

| | # | $I_1$ | $I_2$ | $I_3$ | $I_8$ | $I_9$ | | | |
|---|---|---|---|---|---|---|---|---|---|
| GROUP II | 6 | 44.1 | 15.1 | 9.8 | 235. | 46.1 | | | |
| | 7 | 217. | 32.9 | 111. | 58.2 | 31.1 | | | |
| | 8 | 19.6 | 137.0 | 28.8 | 131. | 120. | | | |
| | 9 | 44.5 | 29.1 | 22.9 | 22.8 | 17.7 | | | |
| | 10 | 4.4 | 4.9 | 4.5 | 60.6 | 17.8 | | | |
| | 11 | 12.3 | 31.1 | 36.2 | 47.9 | 22.0 | | | |
| | 12 | 13.6 | 35.1 | 22.0 | 159.0 | 66.0 | | | |
| | 13 | 61.0 | 5.9 | 9.6 | 27.0 | 31.0 | | | |
| | 14 | 352. | 16.7 | 18.6 | 93.0 | 180. | | | |
| | 15 | 43.1 | 54.1 | 28.0 | 120. | 210. | | | |
| | 16 | 11.1 | 23.7 | 16.2 | 52.0 | 25.4 | | | |
| | 17 | 19.0 | 12.5 | 13.2 | 49.1 | 26.8 | | | |
| | 18 | 25.2 | 7.8 | 25.1 | 66.2 | 38.9 | | | |
| | 19 | 62.1 | 79.2 | 17.1 | 57.8 | 65.7 | | | |
| | 20 | 9.1 | 52.9 | 12.1 | 30.1 | 74.1 | | | |
| | 21 | 8.0 | 24.1 | 11.0 | 102. | 24.6 | | | |
| | 22 | 6.1 | 11.0 | 3.5 | 81.1 | 66.9 | | | |
| | 23 | 41.5 | 12.1 | 22.2 | 109. | 24.1 | | | |
| | 24 | 6.7 | 3.9 | 8.7 | 8.4 | 15.0 | | | |
| | 25 | 9.1 | 2.0 | 4.1 | 18.2 | 22.1 | | | |

TEST CONDUCTED FOR: NASA, OFFICE OF ADVANCED RESEARCH AND TECHNOLOGY

DATE: 4-6-65

TEST: INITIAL MEAS-D.C. PARAMETER CHARACTISTICS

SAMPLE NUMBER: NOTED

BAROM. PRESS.: 29.22 IN. HG.

PART NAME & NUMBER: DTL NAND/NOR GATE - SL1519

TEST MEDIUM: AIR

WET BULB TEMP.: 59°F

MANUFACTURER: A

TEST TEMP.: 73°F C. ☐ F. ☐

DRY BULB TEMP.: 73°F

ENGINEER

TECHNICIAN: [illegible]

INSPECTOR

REF. SPEC.

DATA SHEET NUMBER

JOB NUMBER AO-138-AE PAGE OF TEST REPORT NO. TR 1-1188

601-2
1/64

GENERAL PRECISION, INC.
LIBRASCOPE GROUP

# ENVIRONMENTAL LABORATORY DATA SHEET

TEST CONDITIONS:
IF RETEST CHECK ☐

READINGS IN NANOAMPS

| | # | $I_1$ | $I_2$ | $I_3$ | $I_8$ | $I_9$ | | | |
|---|---|---|---|---|---|---|---|---|---|
| GROUP II | 26 | 16.1 | 35.0 | 137. | 47.9 | 50.2 | | | |
| | 27 | 25.0 | 6.1 | 13.2 | 70.2 | 121. | | | |
| | 28 | 44.1 | 45.2 | 15.1 | 155. | 56.0 | | | |
| | 29 | 72.0 | 14.0 | 76.1 | 155. | 124.0 | | | |
| | 30 | 138. | 11.5 | 8.0 | 77.0 | 83.0 | | | |
| | 31 | 2.7 | 1.9 | 3.7 | 60.7 | 15.1 | | | |
| | 32 | 14.1 | 3.0 | 4.2 | 21.2 | 122. | | | |
| | 33 | 54.0 | 55.0 | 20.2 | 122. | 73.7 | | | |
| | 34 | 14.1 | 7.7 | 16.1 | 57.5 | 115.0 | | | |
| | 35 | 1.9 | 2.0 | 7.5 | 6.6 | 6.9 | | | |
| | 36 | 13.0 | 86.0 | 10.6 | 16.9 | 65.0 | | | |
| | 37 | 54.0 | 28.0 | 16.9 | 156. | 14.6 | | | |
| | 38 | 4.1 | 4.8 | 14.6 | 8.1 | 10.0 | | | |
| | 39 | 12.5 | 5.9 | 2.5 | 8.6 | 12.1 | | | |
| | 40 | 65.8 | 155. | 13.8 | 75.0 | 70.6 | | | |
| | 41 | 37.5 | 38.2 | 13.9 | 155.0 | 39.6 | | | |
| | 42 | 90.9 | 73.0 | 76.0 | 67.0 | 23.6 | | | |
| | 43 | 11.0 | 4.9 | 13.5 | 157. | 30.0 | | | |
| | 44 | 8.6 | 7.8 | 9.7 | 19.1 | 34.1 | | | |
| | 45 | 4.0 | 2.2 | 2.9 | 19.7 | 9.6 | | | |

| | | |
|---|---|---|
| TEST CONDUCTED FOR: NASA OFFICE OF ADVANCED RESEARCH AND TECHNOLOGY | | DATE: 4-6-65 |
| TEST: INITIAL MEAS-DC PARAMETER CHARACTERISTICS | SAMPLE NUMBER: NOTED | BAROM. PRESS. 29.22 IN. HG. |
| PART NAME & NUMBER: DTL NAND/NOR GATE - SL1519 | TEST MEDIUM: AIR | WET BULB TEMP. 59°F |
| MANUFACTURER: A | TEST TEMP. 73°F C. ☐ F. ☐ | DRY BULB TEMP. 73°F |
| ENGINEER | TECHNICIAN: [illegible] | INSPECTOR |
| REF. SPEC. | | DATA SHEET NUMBER |

JOB NUMBER A0-138-AE PAGE OF TEST REPORT NO. TR1-1188

601-2
1/64

GENERAL PRECISION, INC.
LIBRASCOPE GROUP

# ENVIRONMENTAL LABORATORY DATA SHEET

TEST CONDITIONS:
IF RETEST CHECK ☐ READINGS IN NANOAMPS

GROUP III

| # | $I_1$ | $I_2$ | $I_3$ | $I_8$ | $I_9$ | | | |
|---|---|---|---|---|---|---|---|---|
| 47 | 11.6 | 24.8 | 37.1 | 9.8 | 148. | | | |
| 48 | 102. | 810. | 41.0 | 60.1 | 157. | | | |
| 49 | 116. | 45.3 | 65.3 | 44.5 | 28.3 | | | |
| 50 | 6.4 | 8.6 | 6.0 | 116. | 154. | | | |
| 51 | 3.7 | 6.0 | 21.6 | 100. | 19.1 | | | |
| 52 | 13.0 | 155. | 46.2 | 44.0 | 155. | | | |
| 53 | 64.0 | 64.5 | 112. | 146.8 | 70.2 | | | |
| 54 | 9.0 | 3.2 | 156. | 16.5 | 40.1 | | | |
| 55 | 6.0 | 2.6 | 6.1 | 14.2 | 35.5 | | | |
| 56 | 43.2 | 31.0 | 37.7 | 54.1 | 33.0 | | | |
| 57 | 11.2 | 75.0 | 2.8 | 11.0 | 7.7 | | | |
| 58 | 31.1 | 18.2 | 14.3 | 149. | 155. | | | |
| 59 | 170. | 155. | 118. | 155. | 154. | | | |
| 60 | 7.0 | 4.4 | 4.2 | 29.5 | 31.0 | | | |
| 61 | 2.8 | 4.1 | 1.9 | 24.3 | 128 | | | |
| 62 | 33.5 | 12.7 | 9.2 | 12.4 | 79.2 | | | |
| 63 | 4.9 | 29.7 | 4.9 | 61.2 | 25.0 | | | |
| 64 | 8.6 | 130. | 64.0 | 31.8 | 133. | | | |
| 65 | 11.5 | 10.3 | 21.6 | 7.8 | 33.7 | | | |

TEST CONDUCTED FOR: NASA, OFFICE OF ADVANCED RESEARCH AND TECHNOLOGY
DATE: 4-6-65
TEST: INITIAL MEAS-D.C. PARAMETER CHARACTERISTICS
SAMPLE NUMBER: NOTED
BAROM. PRESS.: 29.22 IN. HG.
PART NAME & NUMBER: DTL NAND/NOR GATE - SL1519
TEST MEDIUM: AIR
WET BULB TEMP.: 59°F
MANUFACTURER: A
TEST TEMP.: 73°F C. ☐ F. ☐
DRY BULB TEMP.: 73°F
ENGINEER
TECHNICIAN: TC Naskins
INSPECTOR
REF. SPEC.
DATA SHEET NUMBER

JOB NUMBER Ae-138-AE PAGE OF TEST REPORT NO. TR1-1188

601-2
1/64

GENERAL PRECISION, INC.
LIBRASCOPE GROUP

# ENVIRONMENTAL LABORATORY DATA SHEET

TEST CONDITIONS:
IF RETEST CHECK ☐

READINGS IN NANOAMPS

| | # | $I_1$ | $I_2$ | $I_3$ | $I_8$ | $I_9$ | | | |
|---|---|---|---|---|---|---|---|---|---|
| GROUP IV | 66 | 8.5 | 4.0 | 21.0 | 14.0 | 17.4 | | | |
| | 67 | 7.2 | 2.9 | 27.0 | 28.8 | 19.9 | | | |
| | 68 | 25.2 | 2.7 | 18.2 | 15.8 | 10.1 | | | |
| | 69 | 10.3 | 10.6 | 92.5 | 69.2 | 6.8 | | | |
| | 70 | 21.9 | 7.6 | 3.1 | 18.5 | 21.0 | | | |
| | 71 | 5.8 | 11.6 | 2.9 | 16.4 | 44.7 | | | |
| | 72 | 97. | 78.4 | 32.0 | 159. | 49.0 | | | |
| | 73 | 420. | 24.2 | 15.4 | 34.7 | 87.9 | | | |
| | 74 | 12.2 | 99.5 | 30.3 | 137. | 24.5 | | | |
| | 75 | 43.4 | 130. | 2.4μa | 20.2 | 61.9 | | | |
| | 76 | 4.1 | 99. | 11.6 | 1.2μa | 140. | | | |
| | 77 | 2.6 | 2.0 | 1.9 | 5.3 | 4.0 | | | |
| | 78 | 16.0 | 12.1 | 17.6 | 32.6 | 340. | | | |
| | 79 | 25.0 | 34.4 | 42.5 | 68.4 | 27.7 | | | |
| | 80 | 6.6 | 5.5 | 80.0 | 68.0 | 83.6 | | | |
| | 81 | 66.2 | 48.5 | 26.0 | 63.9 | 184. | | | |
| | 82 | 18.2 | 12.0 | 11.0 | 63.1 | 26.1 | | | |
| | 83 | 5.0 | 25.0 | 9.8 | 36.2 | 51.0 | | | |
| | 84 | 2.7 | 8.0 | 1.9 | 9.8 | 5.7 | | | |
| | 85 | 101. | 61.6 | 175. | 62.9 | 95.0 | | | |
| | 86 | 9.7 | 68.2 | 19.5 | 26.2 | 519. | | | |
| | 87 | 33.0 | 212. | 8.0 | 166. | 36.2 | | | |
| | 88 | 7.3 | 7.1 | 2.1 | 18.9 | 19.3 | | | |
| | 89 | 44.4 | 63.3 | 17.8 | 85.6 | 47.7 | | | |
| | 90 | 29.1 | 131. | 19.9 | 157. | 239. | | | |
| | | | | | | | | | |

| | | |
|---|---|---|
| TEST CONDUCTED FOR: NASA OFFICE OF ADVANCED RESEARCH AND TECHNOLOGY | | DATE: 4-6-65 |
| TEST: INITIAL MEAS-DC PARAMETER CHARACTERISTICS | SAMPLE NUMBER: NOTED | BAROM. PRESS. 29.22 IN. HG. |
| PART NAME & NUMBER: DTL NAND/NOR GATE - SL1519 | TEST MEDIUM: AIR | WET BULB TEMP. 59°F |
| MANUFACTURER: A | TEST TEMP. 73°F C. ☐ F. ☐ | DRY BULB TEMP. 73°F |
| ENGINEER | TECHNICIAN: [illegible] | INSPECTOR |
| REF. SPEC. | | DATA SHEET NUMBER |

JOB NUMBER Aa-138-AE PAGE OF TEST REPORT NO. TR1-1188

601-2
1/64

GENERAL PRECISION, INC.
LIBRASCOPE GROUP

# ENVIRONMENTAL LABORATORY DATA SHEET

TEST CONDITIONS:
IF RETEST CHECK ☐

READINGS IN NANOAMPS

| | # | $I_1$ | $I_2$ | $I_3$ | $I_8$ | $I_9$ | | | |
|---|---|---|---|---|---|---|---|---|---|
| GROUP IV | 91 | 26.1 | 57.3 | 99.6 | 54.3 | 35.1 | | | |
| | 92 | 15.4 | 3.0 | 3.7 | 55.5 | 147. | | | |
| | 93 | 8.1 | 9.1 | 4.9 | 32.3 | 24.1 | | | |
| | 94 | 11.3 | 5.5 | 3.8 | 9.0 | 21.0 | | | |
| | 95 | 52.1 | 27.6 | 36.8 | 28.0 | 20.4 | | | |
| | 96 | 5.1 | 3.1 | 5.8 | 11.2 | 12.6 | | | |
| | 97 | 31.1 | 319. | 45.5 | 159. | 199. | | | |
| | 98 | 8.6 | 35.4 | 38.4 | 150. | 239. | | | |
| | 99 | 14.6 | 44.2 | 54.3 | 32.2 | 37.0 | | | |
| | 100 | 282. | 34.6 | 8.0 | 13.1 | 14.3 | | | |
| | 101 | 24.4 | 146. | 15.4 | 24.8 | 62.7 | | | |
| | 102 | 16.8 | 110. | 7.1 | 55.4 | 43.1 | | | |
| | 103 | 22.4 | 10.0 | 19.0 | 39.6 | 38.2 | | | |
| | 104 | 340. | 19.0 | 33.9 | 64.8 | 92.0 | | | |
| | 105 | 54.9 | 50.3 | 26.1 | 68.0 | 21.0 | | | |
| | 106 | 75.3 | 140. | 17.6 | 79.1 | 130. | | | |
| | 107 | 20.1 | 8.2 | 5.7 | 31.1 | 5.3 | | | |
| | 108 | 56.0 | 13.5 | 15.3 | 428. | 101. | | | |
| | 109 | 8.1 | 11.6 | 21.0 | 13.2 | 28.1 | | | |
| | 110 | 5.5 | 8.8 | 24.1 | 25.1 | 110. | | | |
| | 111 | 18.3 | 15.4 | 120. | 203. | 29.1 | | | |
| | 112 | 5.0 | 2.1 | 1.5 | 19.6 | 9.0 | | | |
| | 113 | 16.8 | 17.5 | 10.6 | 50.1 | .1 | | | |
| | 114 | 9.4 | 33.0 | 18.6 | 112. | 25.1 | | | |
| | 115 | 12.0 | 15.6 | 14.0 | 35.2 | 50.0 | | | |

TEST CONDUCTED FOR: NASA, OFFICE OF ADVANCED RESEARCH AND TECHNOLOGY
DATE: 4-6-65
TEST: INITIAL MEAS-DC. PARAMETER CHARACTERISTICS
SAMPLE NUMBER: NOTED
BAROM. PRESS.: 29.22 IN. HG.
PART NAME & NUMBER: DTL NAND/NOR GATE - SL1519
TEST MEDIUM: AIR
WET BULB TEMP.: 59°F
MANUFACTURER: A
TEST TEMP.: 73°F C. ☐ F. ☐
DRY BULB TEMP.: 73°F
ENGINEER:
TECHNICIAN: T. Hawkins
INSPECTOR:
REF. SPEC.:
DATA SHEET NUMBER:

JOB NUMBER A0-138-AE PAGE OF TEST REPORT NO. TR1-1188

601-2
1/64

GENERAL PRECISION, INC
LIBRASCOPE GROUP

# ENVIRONMENTAL LABORATORY DATA SHEET

## GROUP I - INSTRUMENTATION CONTROL

PARAMETER: RESISTANCE MEASUREMENTS AT 1 MA

CALIBRATION CHECK AT 1 MA

| CALIBRATION RESISTOR | VOLTAGE - FULL SCALE = 10 VOLTS | | |
|---|---|---|---|
| 2000 OHMS | 0200 ' | 0201 ' | 0201 ' |
| 1000 OHMS | 0099 ' | 0100 ' | 0100 ' |
| 500 OHMS | | | |

| SAMPLE NUMBER | RESISTANCE - FULL SCALE = 10 K OHMS | | | |
|---|---|---|---|---|
| | SECTION I | | SECTION II | |
| | R1+R2 | R4 | R1+R2 | R4 |
| 1 | 0356 ' | 0268 ' | 0275 ' | 0267 ' |
| 2 | 0350 ' | 0266 ' | 0276 ' | 0263 ' |
| 3 | 0372 ' | 0282 ' | 0299 ' | 0282 ' |
| 4 | 0361 ' | 0274 ' | 0285 ' | 0273 ' |
| 5' | 0369 ' | 0282 ' | 0296 ' | 0282 ' |

| | | |
|---|---|---|
| TEST CONDUCTED FOR: NASA OFFICE OF ADVANCED RESEARCH AND TECHNOLOGY | | DATE: 4-2-65 |
| TEST: INITIAL MEAS - DC PARAMETER CHARACTERISTICS | SAMPLE NUMBER: NOTED | BAROM PRESS: IN HG |
| PART NAME & NUMBER: DTL NAND/NOR GATE - SL 1519 | TEST MEDIUM: AIR | WET BULB TEMP: 60°F |
| MANUFACTURER: A | TEST TEMP: 72°F C. F. | DRY BULB TEMP: 72°F |
| ENGINEER | TECHNICIAN: T. Erickson | INSPECTOR |
| REF. SPEC. | | DATA SHEET NUMBER |

JOB NUMBER Ao-138-AE PAGE OF TEST REPORT NO TR1-1188

6212
1/64

GENERAL PRECISION, INC
LIBRASCOPE GROUP

# ENVIRONMENTAL LABORATORY DATA SHEET

GROUP II - LIFE TEST GROUP

PARAMETER: RESISTANCE MEASUREMENTS AT 1 MA

RESISTANCE - FULL SCALE = 100K OHMS

| SAMPLE NUMBER | SECTION I R1+R2 | SECTION I R4 | SECTION II R1+R2 | SECTION II R4 |
|---|---|---|---|---|
| 6 | 0359 ' | 0273 ' | 0286 ' | 0272 ' |
| 7 | 0364 ' | 0269 ' | 0289 ' | 0271 ' |
| 8 | 0352 ' | 0266 ' | 0278 ' | 0266 ' |
| 9 | 0377 ' | 0286 ' | 0302 ' | 0285 ' |
| 10 | 0372 ' | 0282 ' | 0298 ' | 0284 ' |
| 11 | 0386 ' | 0291 ' | 0310 ' | 0289 ' |
| 12 | 0369 ' | 0281 ' | 0300 ' | 0283 ' |
| 13 | 0345 ' | 0262 ' | 0268 ' | 0262 ' |
| 14 | 0353 ' | 0265 ' | 0271 ' | 0263 ' |
| 15 | 0374 ' | 0285 ' | 0302 ' | 0283 ' |
| 16 | 0376 ' | 0292 ' | 0305 ' | 0292 ' |
| 17 | 0370 ' | 0275 ' | 0296 ' | 0277 ' |
| 18 | 0348 ' | 0259 ' | 0262 ' | 0259 ' |
| 19 | 0362 ' | 0271 ' | 0281 ' | 0269 ' |
| 20 | 0372 ' | 0289 ' | 0302 ' | 0288 ' |
| 21 | 0371 ' | 0287 ' | 0299 ' | 0287 ' |
| 22 | 0360 ' | 0273 ' | 0289 ' | 0271 ' |
| 23 | 0343 ' | 0262 ' | 0275 ' | 0262 ' |
| 24 | 0362 ' | 0276 ' | 0292 ' | 0276 ' |
| 25' | 0359 ' | 0273 ' | 0292 ' | 0274 ' |

| | | |
|---|---|---|
| TEST CONDUCTED FOR: NASA OFFICE OF ADVANCED RESEARCH AND TECHNOLOGY | | DATE: 4-2-65 |
| TEST: INITIAL MEAS.-DC. PARAMETER CHARACTERISTICS | SAMPLE NUMBER: NOTED | BAROM PRESS: IN HG |
| PART NAME & NUMBER: DTL NAND/NOR GATE - SL 1519 | TEST MEDIUM: AIR | WET BULB TEMP: 60°F |
| MANUFACTURER: A | TEST TEMP: 72°F C. F. | DRY BULB TEMP: 72°F |
| ENGINEER | TECHNICIAN: T E Nackins | INSPECTOR |
| REF SPEC | | DATA SHEET NUMBER |

JOB NUMBER Ao-138-AE PAGE OF TEST REPORT NO TR1-1188

GENERAL PRECISION, INC
LIBRASCOPE GROUP

# ENVIRONMENTAL LABORATORY DATA SHEET

GROUP II - LIFE TEST GROUP

PARAMETER: RESISTANCE MEASUREMENTS AT 1 MA

RESISTANCE - FULL SCALE = 100KOHMS

| SAMPLE NUMBER | SECTION I R1+R2 | SECTION I R4 | SECTION II R1+R2 | SECTION II R4 |
|---|---|---|---|---|
| 26 | 0361 ' | 0269 ' | 0281 ' | 0270 ' |
| 27 | 0374 ' | 0285 ' | 0298 ' | 0281 ' |
| 28 | 0369 ' | 0280 ' | 0294 ' | 0276 ' |
| 29 | 0366 ' | 0279 ' | 0296 ' | 0279 ' |
| 30 | 0369 ' | 0280 ' | 0296 ' | 0278 ' |
| 31 | 0358 ' | 0269 ' | 0285 ' | 0267 ' |
| 32 | 0363 ' | 0278 ' | 0292 ' | 0275 ' |
| 33 | 0361 ' | 0274 ' | 0289 ' | 0270 ' |
| 34 | 0352 ' | 0267 ' | 0274 ' | 0265 ' |
| 35 | 0357 ' | 0268 ' | 0282 ' | 0270 ' |
| 36 | 0370 ' | 0281 ' | 0299 ' | 0280 ' |
| 37 | 0372 ' | 0284 ' | 0300 ' | 0281 ' |
| 38 | 0375 ' | 0287 ' | 0302 ' | 0287 ' |
| 39 | 0364 ' | 0278 ' | 0292 ' | 0276 ' |
| 40 | 0353 ' | 0264 ' | 0276 ' | 0265 ' |
| 41 | 0370 ' | 0279 ' | 0296 ' | 0274 ' |
| 42 | 0367 ' | 0282 ' | 0298 ' | 0281 ' |
| 43 | 0374 ' | 0285 ' | 0299 ' | 0285 ' |
| 44 | 0368 ' | 0275 ' | 0293 ' | 0278 ' |
| 45 | 0362 ' | 0276 ' | 0291 ' | 0276 ' |

CALIBRATION CHECK

VOLTAGE - FULL SCALE = 100 VOLTS

| CALIBRATION RESISTOR | | | |
|---|---|---|---|
| 2000 OHMS | 0200 ' | 0199 ' | 0200 ' |
| 1000 OHMS | 0101 ' | 0102 ' | 0099 ' |

| | | |
|---|---|---|
| TEST CONDUCTED FOR: NASA OFFICE OF ADVANCED RESEARCH AND TECHNOLOGY | | DATE: 4-22-65 |
| TEST: INITIAL MEAS-DC. PARAMETER CHARACTERISTICS | SAMPLE NUMBER: NOTED | BAROM PRESS: IN HG |
| PART NAME & NUMBER: DTL NAND/NOR GATE - SL 1519 | TEST MEDIUM: AIR | WET BULB TEMP: 60°F |
| MANUFACTURER: A | TEST TEMP: 72°F | DRY BULB TEMP: 72°F |
| ENGINEER | TECHNICIAN: F. Blackburn | INSPECTOR |
| REF SPEC | | DATA SHEET NUMBER |

JOB NUMBER AO-138-AE PAGE OF TEST REPORT NO TR1-1188

GENERAL PRECISION, INC
LIBRASCOPE GROUP

# ENVIRONMENTAL LABORATORY DATA SHEET

GROUP III - TEMP CYCLE STEP STRESS GROUP

PARAMETER: RESISTANCE MEASUREMENTS AT 1 MA

RESISTANCE - FULL SCALE = 100 K OHMS

| SAMPLE NUMBER | SECTION I R1+R2 | SECTION I R4 | SECTION II R1+R2 | SECTION II R4 | |
|---|---|---|---|---|---|
| 46 | 0371 ' | 0285 ' | 0296 ' | 0284 ' | + |
| 47 | 0355 ' | 0272 ' | 0278 ' | 0267 ' | |
| 48 | 0370 ' | 0280 ' | 0296 ' | 0282 ' | |
| 49 | 0361 ' | 0270 ' | 0284 ' | 0268 ' | |
| 50 | 0374 ' | 0289 ' | 0301 ' | 0287 ' | |
| 51 | 0373 ' | 0289 ' | 0301 ' | 0288 ' | |
| 52 | 0370 ' | 0283 ' | 0299 ' | 0281 ' | |
| 53 | 0372 ' | 0283 ' | 0299 ' | 0285 ' | |
| 54 | 0362 ' | 0275 ' | 0291 ' | 0276 ' | |
| 55 | 0363 ' | 0278 ' | 0291 ' | 0280 ' | |
| 56 | 0345 ' | 0262 ' | 0267 ' | 0261 ' | |
| 57 | 0367 ' | 0278 ' | 0296 ' | 0280 ' | |
| 58 | 0343 ' | 0263 ' | 0265 ' | 0259 ' | |
| 59 | 0370 ' | 0281 ' | 0298 ' | 0282 ' | |
| 60 | 0375 ' | 0283 ' | 0299 ' | 0281 ' | |
| 61 | 0365 ' | 0282 ' | 0296 ' | 0282 ' | |
| 62 | 0367 ' | 0276 ' | 0293 ' | 0279 ' | |
| 63 | 0365 ' | 0277 ' | 0292 ' | 0271 ' | |
| 64 | 0363 ' | 0272 ' | 0275 ' | 0266 ' | |
| 65 | 0368 ' | 0277 ' | 0294 ' | 0274 ' | |

CALIBRATION CHECK

VOLTAGE - FULL SCALE = 100 VOLTS

| CALIBRATION RESISTOR | | | |
|---|---|---|---|
| 2000 OHMS | 0201 ' | 0201 ' | 0199 ' |
| 1000 OHMS | 0102 ' | 0102 ' | 0101 ' |
| 500 OHMS' | | | |

| | | |
|---|---|---|
| TEST CONDUCTED FOR: NASA OFFICE OF ADVANCED RESEARCH AND TECHNOLOGY | | DATE: 4-2-65 |
| TEST: INITAL MEAS.-DC. PARAMETER CHARACTERISTICS | SAMPLE NUMBER: NOTED | BAROM PRESS: IN. HG |
| PART NAME & NUMBER: DTL NAND/NOR GATE - SL1519 | TEST MEDIUM: AIR | WET BULB TEMP: 60°F |
| MANUFACTURER: A | TEST TEMP: 72°F C. F. | DRY BULB TEMP: 72°F |
| ENGINEER: | TECHNICIAN: F. Nadeau | INSPECTOR: |
| REF. SPEC. | | DATA SHEET NUMBER |

JOB NUMBER Aa-138-AE PAGE OF TEST REPORT NO TR1-1188

GENERAL PRECISION, INC
LIBRASCOPE GROUP

# ENVIRONMENTAL LABORATORY DATA SHEET

GROUP IV - TEMP STEP STRESS GROUP

PARAMETER: RESISTANCE MEASUREMENTS AT 1 MA

RESISTANCE - FULL SCALE = 100 K OHMS

| SAMPLE NUMBER | SECTION I R1+R2 | SECTION I R4 | SECTION II R1+R2 | SECTION II R4 |
|---|---|---|---|---|
| 66 | 0366 ' | 0276 ' | 0292 ' | 0276 ' |
| 67 | 0365 ' | 0275 ' | 0292 ' | 0273 ' |
| 68 | 0364 ' | 0275 ' | 0292 ' | 0277 ' |
| 69 | 0365 ' | 0278 ' | 0292 ' | 0276 ' |
| 70 | 0372 ' | 0283 ' | 0300 ' | 0282 ' |
| 71 | 0360 ' | 0272 ' | 0285 ' | 0271 ' |
| 72 | 0365 ' | 0281 ' | 0299 ' | 0280 ' |
| 73 | 0365 ' | 0278 ' | 0296 ' | 0273 ' |
| 74 | 0371 ' | 0290 ' | 0302 ' | 0288 ' |
| 75 | 0360 ' | 0282 ' | 0300 ' | 0281 ' |
| 76 | 0364 ' | 0275 ' | 0293 ' | 0274 ' |
| 77 | 0356 ' | 0266 ' | 0284 ' | 0268 ' |
| 78 | 0345 ' | 0265 ' | 0274 ' | 0266 ' |
| 79 | 0363 ' | 0279 ' | 0296 ' | 0278 ' |
| 80' | 0370 ' | 0286 ' | 0298 ' | 0285 ' |

| | | |
|---|---|---|
| TEST CONDUCTED: NASA, OFFICE OF ADVANCED RESEARCH AND TECHNOLOGY | | DATE 4-2-65 |
| TEST: INITIAL MEAS-DC PARAMETER CHARACTERISTICS | SAMPLE NUMBER NOTED | BAROM. PRESS IN HG. |
| PART NAME & NUMBER: DTL NAND/NOR GATE - SL1519 | TEST MEDIUM AIR | WET BULB TEMP 60°F |
| MANUFACTURER: A | TEST TEMP. 72°F C. ☐ F. ☒ | DRY BULB TEMP. 72°F |
| ENGINEER | TECHNICIAN J. Hudson | INSPECTOR |
| REF. SPEC. | | DATA SHEET NUMBER |

JOB NUMBER A0-138-AE PAGE OF TEST REPORT NO. TR1-1188

GENERAL PRECISION, INC
LIBRASCOPE GROUP

# ENVIRONMENTAL LABORATORY DATA SHEET

GROUP IV - TEMPSTEP STRESS GROUP

PARAMETER: RESISTANCE MEASUREMENTS AT 1 MA

| SAMPLE NUMBER | RESISTANCE - FULL SCALE = 100 K OHMS SECTION I R1+R2 | SECTION I R4 | SECTION II R1+R2 | SECTION II R4 |
|---|---|---|---|---|
| 81 | 0352 ' | 0266 ' | 0278 ' | 0265 ' |
| 82 | 0370 ' | 0279 ' | 0296 ' | 0276 ' |
| 83 | 0365 ' | 0277 ' | 0293 ' | 0273 ' |
| 84 | 0360 ' | 0268 ' | 0286 ' | 0270 ' |
| 85 | 0358 ' | 0272 ' | 0285 ' | 0269 ' |
| 86 | 0348 ' | 0266 ' | 0296 ' | 0261 ' |
| 87 | 0371 ' | 0283 ' | 0300 ' | 0283 ' |
| 88 | 0362 ' | 0275 ' | 0295 ' | 0277 ' |
| 89 | 0373 ' | 0282 ' | 0299 ' | 0283 ' |
| 90 | 0362 ' | 0272 ' | 0283 ' | 0270 ' |
| 91 | 0359 ' | 0269 ' | 0281 ' | 0269 ' |
| 92 | 0387 ' | 0287 ' | 0315 ' | 0286 ' |
| 93 | 0345 ' | 0263 ' | 0351 ' | 0264 ' |
| 94 | 0362 ' | 0279 ' | 0290 ' | 0277 ' |
| 95 | 0359 ' | 0272 ' | 0285 ' | 0271 ' |
| 96 | 0356 ' | 0265 ' | 0283 ' | 0270 ' |
| 97 | 0368 ' | 0281 ' | 0296 ' | 0281 ' |
| 98 | 0349 ' | 0265 ' | 0276 ' | 0263 ' |
| 99 | 0379 ' | 0289 ' | 0303 ' | 0286 ' |
| 100' | 0363 ' | 0280 ' | 0292 ' | 0277 ' |

| | | |
|---|---|---|
| TEST CONDUCTED: NASA, OFFICE OF ADVANCED RESEARCH AND TECHNOLOGY | | DATE 4-2-65 |
| TEST: INITIAL MEAS-DC PARAMETER CHARACTERISTICS | SAMPLE NUMBER: NOTED | BAROM. PRESS IN HG |
| PART NAME & NUMBER: DTL NAND/NOR-GATE - SL1519 | TEST MEDIUM: AIR | WET BULB TEMP 60°F |
| MANUFACTURER: A | TEST TEMP 72°F C. F. | DRY BULB TEMP 72°F |
| ENGINEER | TECHNICIAN: [illegible] | INSPECTOR |
| REF SPEC | | DATA SHEET NUMBER |

JOB NUMBER A0-138-AE PAGE OF TEST REPORT NO TR1-1188

GENERAL PRECISION, INC
LIGNASCOPE GROUP

# ENVIRONMENTAL LABORATORY DATA SHEET

GROUP IV - TEMP STEP STRESS GROUP

PARAMETER: RESISTANCE MEASUREMENTS AT 1 MA

RESISTANCE - FULL SCALE = 100K OHMS

| SAMPLE NUMBER | SECTION I R1+R2 | SECTION I R4 | SECTION II R1+R2 | SECTION II R4 |
|---|---|---|---|---|
| 101 | 0365 ' | 0276 ' | 0291 ' | 0278 ' |
| 102 | 0372 ' | 0287 ' | 0299 ' | 0288 ' |
| 103 | 0370 ' | 0285 ' | 0295 ' | 0281 ' |
| 104 | 0365 ' | 0277 ' | 0296 ' | 0272 ' |
| 105 | 0358 ' | 0271 ' | 0286 ' | 0270 ' |
| 106 | 0370 ' | 0282 ' | 0300 ' | 0285 ' |
| 107 | 0362 ' | 0278 ' | 0293 ' | 0276 ' |
| 108 | 0377 ' | 0287 ' | 0302 ' | 0286 ' |
| 109 | 0372 ' | 0289 ' | 0302 ' | 0285 ' |
| 110 | 0366 ' | 0279 ' | 0293 ' | 0277 ' |
| 111 | 0375 ' | 0285 ' | 0301 ' | 0285 ' |
| 112 | 0380 ' | 0291 ' | 0307 ' | 0291 ' |
| 113 | 0372 ' | 0277 ' | 0299 ' | 0279 ' |
| 114 | 0371 ' | 0280 ' | 0297 ' | 0279 ' |
| 115 | 0382 ' | 0283 ' | 0299 ' | 0283 ' |

CALIBRATION CHECK

VOLTAGE - FULL SCALE = 100 VOLTS

| CALIBRATION RESISTOR | | | |
|---|---|---|---|
| 2000 OHMS | 0199 ' | 0201 ' | 0201 ' |
| 1000 OHMS | 0100 ' | 0100 ' | 0100 ' |
| 500 OHMS' | | | |

| | | |
|---|---|---|
| TEST CONDUCTED FOR: NASA, OFFICE OF ADVANCED RESEARCH AND TECHNOLOGY | | DATE 7-2-65 |
| TEST: INITIAL MEAS-DC PARAMETER CHARACTERISTICS | SAMPLE NUMBER NOTED | BAROM PRESS IN HG |
| PART NAME & NUMBER: DTL NAND/NOR GATE - SL1519 | TEST MEDIUM AIR | WET BULB TEMP 60°F |
| MANUFACTURER A | TEST TEMP 72°F | DRY BULB TEMP 72°F |
| ENGINEER | INSPECTOR | |
| REF SPEC | DATA SHEET NUMBER | |

JOB NUMBER AO-138-AE PAGE OF TEST REPORT NO TR1-1188

GENERAL PRECISION, INC
LIBRASCOPE GROUP

# ENVIRONMENTAL LABORATORY DATA SHEET

GROUP I - INSTRUMENTATION CONTROL

CALIBRATION RESISTOR — CURRENT - FULL SCALE = 10 MA

| | | | | |
|---|---|---|---|---|
| 2000 OHMS | 1995 ' | 1980 ' | 1992 ' | 1999 ' |
| 1000 OHMS. | 4000 ' | 3999 ' | 4010 ' | 4000 ' |

PARAMETER: DIODE FORWARD CURRENT WITH V10 = 4 VOLTS

CURRENT FULL SCALE = 10 MA

| SAMPLE NUMBER | If1 | If2 | If8 | If9 |
|---|---|---|---|---|
| 1 | 1322 ' | 1339 ' | 1399 ' | 1599 ' |
| 2 | 1448 ' | 1242 ' | 1451 ' | 1453 ' |
| 3 | 1395 ' | 1385 ' | 1416 ' | 1383 ' |
| 4 | 1541 ' | 1541 ' | 1560 ' | 1555 ' |
| 5' | 1415 ' | 1411 ' | 1435 ' | 1450 ' |

TITLE CONTRACT: NASA OFFICE OF ADVANCED RESEARCH AND TECHNOLOGY
DATE: 4-3-65
TEST: INITIAL MEAS.-D.C PARAMETER CHARACTERISTICS
SAMPLE NUMBER: NOTED
PART NAME & NUMBER: DTL NAND/NOR GATE - SL1519
TEST MEDIUM: AIR
MANUFACTURER: A
TEST TEMP.: 72 °F
58 °F
72 °F
ENGINEER
TECHNICIAN: L. Hayn
INSPECTOR
REF SPEC
DATA SHEET

JOB NUMBER AO-138-AE PAGE OF TEST REPORT NO TRI-1188

GENERAL PRECISION, INC
LIBRASCOPE GROUP

# ENVIRONMENTAL LABORATORY DATA SHEET

GROUP II - LIFE TEST GROUP

PARAMETER: DIODE FORWARD CURRENT WITH V10 = 4 VOLTS

| SAMPLE NUMBER | If1 | If2 | If8 | If9 |
|---|---|---|---|---|
| | CURRENT - FULL SCALE = 10 MA | | | |
| 6 | 1562 ' | 1560 ' | 1559 ' | 1569 ' |
| 7 | 1499 ' | 1519 ' | 1586 ' | 1580 ' |
| 8 | 1337 ' | 1320 ' | 1332 ' | 1315 ' |
| 9 | 1179 ' | 1173 ' | 1179 ' | 1196 ' |
| 10 | 1390 ' | 1361 ' | 1399 ' | 1380 ' |
| 11 | 1199 ' | 1199 ' | 1194 ' | 1189 ' |
| 12 | 1390 ' | 1398 ' | 1399 ' | 1410 ' |
| 13 | 1370 ' | 1346 ' | 1380 ' | 1379 ' |
| 14 | 1600 ' | 1579 ' | 1620 ' | 1619 ' |
| 15 | 1359 ' | 1360 ' | 1366 ' | 1379 ' |
| 16 | 1246 ' | 1229 ' | 1240 ' | 1239 ' |
| 17 | 1479 ' | 1499 ' | 1462 ' | 1479 ' |
| 18 | 1529 ' | 1572 ' | 1539 ' | 1550 ' |
| 19 | 1497 ' | 1512 ' | 1542 ' | 1560 ' |
| 20 | 1329 ' | 1320 ' | 1300 ' | 1308 ' |
| 21 | 1329 ' | 1340 ' | 1334 ' | 1340 ' |
| 22 | 1565 ' | 1559 ' | 1559 ' | 1562 ' |
| 23 | 1739 ' | 1745 ' | 1729 ' | 1722 ' |
| 24 | 1552 ' | 1519 ' | 1509 ' | 1520 ' |
| 25' | 1521 ' | 1556 ' | 1540 ' | 1519 ' |

| | | |
|---|---|---|
| TEST CONDUCTED FOR: NASA OFFICE OF ADVANCED RESEARCH AND TECHNOLOGY | | DATE 4-3-65 |
| TEST: INITIAL MEAS.-DC PARAMETER CHARACTERISTICS | SAMPLE NUMBER NOTED | BAROM. PRESS IN. HG. |
| PART NAME & NUMBER: DTL NAND/NOR GATE - SL1519 | TEST MEDIUM AIR | WET BULB TEMP 58°F |
| MANUFACTURER: A | TEST TEMP 72° F | DRY BULB TEMP 72°F |
| ENGINEER | TECHNICIAN S. Hayn | INSPECTOR |
| REF. SPEC. | | DATA SHEET NUMBER |

JOB NUMBER Ao-138-AE PAGE OF TEST REPORT NO. TR1-1188

GENERAL PRECISION, INC
LIBRASCOPE GROUP

# ENVIRONMENTAL LABORATORY DATA SHEET

GROUP II - LIFE TEST GROUP

PARAMETER: DIODE FORWARD CURRENT WITH V10 = 4 VOLTS

| SAMPLE NUMBER | IAf1 | CURRENT - FULL SCALE = 10 MA If2 | If8 | If9 |
|---|---|---|---|---|
| 26 | 1497 ' | 1499 ' | 1499 ' | 1502 ' |
| 27 | 1390 ' | 1372 ' | 1382 ' | 1400 ' |
| 28 | 1501 ' | 1509 ' | 1509 ' | 1510 ' |
| 29 | 1499 ' | 1494 ' | 1479 ' | 1485 ' |
| 30 | 1459 ' | 1459 ' | 1480 ' | 1467 ' |
| 31 | 1636 ' | 1639 ' | 1639 ' | 1662 ' |
| 32 | 1509 ' | 1506 ' | 1490 ' | 1522 ' |
| 33 | 1600 ' | 1609 ' | 1615 ' | 1606 ' |
| 34 | 1432 ' | 1442 ' | 1419 ' | 1413 ' |
| 35 | 1652 ' | 1629 ' | 1669 ' | 1660 ' |
| 36 | 1482 ' | 1475 ' | 1459 ' | 1480 ' |
| 37 | 1390 ' | 1360 ' | 1369 ' | 1372 ' |
| 38 | 1270 ' | 1300 ' | 1309 ' | 1322 ' |
| 39 | 1435 ' | 1457 ' | 1459 ' | 1450 ' |
| 40 | 1502 ' | 1519 ' | 1560 ' | 1569 ' |
| 41 | 1500 ' | 1510 ' | 1502 ' | 1499 ' |
| 42 | 1399 ' | 1391 ' | 1399 ' | 1382 ' |
| 43 | 1319 ' | 1342 ' | 1341 ' | 1326 ' |
| 44 | 1459 ' | 1480 ' | 1482 ' | 1466 ' |
| 45 | 1512 ' | 1519 ' | 1530 ' | 1520 ' |

CALIBRATION CHECK

| CALIBRATION RESISTOR | CURRENT - FULL SCALE = 10 MA |
|---|---|
| 2000 OHMS | |
| 1000 OHMS' | |

| | | |
|---|---|---|
| TEST CONDUCTED FOR: NASA, OFFICE OF ADVANCED RESEARCH AND TECHNOLOGY | | DATE 4-3-65 |
| TEST: INITIAL MEAS-DC PARAMETER CHARACTERISTICS | SAMPLE NUMBER NOTED | BAROM PRESS IN HG |
| PART NAME & NO: DTL NAND/NOR GATE — SL1519 | TEST MEDIUM AIR | WET BULB TEMP 58°F |
| MANUFACTURER: A | TEST TEMP 72°F | DRY BULB TEMP 72°F |
| ENGINEER | CHECKED BY S. Hayn | INSPECTOR |
| REF SPEC | | DATA SHEET NUMBER |

JOB NUMBER A0-138-AE PAGE OF TEST REPORT NO. TR1-1188

GENERAL PRECISION, INC
LIBRASCOPE GROUP

# ENVIRONMENTAL LABORATORY DATA SHEET

GROUP III - TEMP CYCLE STEP STRESS GROUP

PARAMETER: DIODE FORWARD CURRENT WITH V10 = 4 VOLTS

| SAMPLE NUMBER | CURRENT - FULL SCALE = 10 MA If1 | If2 | If8 | If9 |
|---|---|---|---|---|
| 46 | 1403 ' | 1399 ' | 1419 ' | 1440 ' |
| 47 | 1542 ' | 1569 ' | 1599 ' | 1600 ' |
| 48 | 1415 ' | 1431 ' | 1420 ' | 1439 ' |
| 49 | 1562 ' | 1561 ' | 1583 ' | 1598 ' |
| 50 | 1300 ' | 1290 ' | 1279 ' | 1282 ' |
| 51 | 1231 ' | 1229 ' | 1252 ' | 1240 ' |
| 52 | 1420 ' | 1420 ' | 1419 ' | 1432 ' |
| 53 | 1399 ' | 1386 ' | 1399 ' | 1388 ' |
| 54 | 1519 ' | 1530 ' | 1519 ' | 1526 ' |
| 55 | 1556 ' | 1550 ' | 1533 ' | 1533 ' |
| 56 | 1602 ' | 1622 ' | 1584 ' | 1570 ' |
| 57 | 1500 ' | 1481 ' | 1500 ' | 1495 ' |
| 58 | 1686 ' | 1661 ' | 1712 ' | 1720 ' |
| 59 | 1440 ' | 1436 ' | 1446 ' | 1442 ' |
| 60 | 1341 ' | 1359 ' | 1359 ' | 1374 ' |
| 61 | 1393 ' | 1400 ' | 1419 ' | 1440 ' |
| 62 | 1480 ' | 1482 ' | 1500 ' | 1502 ' |
| 63 | 1502 ' | 1487 ' | 1519 ' | 1510 ' |
| 64 | 1600 ' | 1600 ' | 1670 ' | 1672 ' |
| 65 | 1499 ' | 1499 ' | 1400 ' | 1372 ' |

CALIBRATION CHECK

| CALIBRATION RESISTOR | CURRENT - FULL SCALE = 10 MA | | | |
|---|---|---|---|---|
| 2000 OHMS | 2000 ' | 1995 ' | 1973 ' | 1995 ' |
| 1000 OHMS' | 4019 ' | 4010 ' | 4009 ' | 4007 ' |

| | | |
|---|---|---|
| TEST CONDUCTED FOR: NASA OFFICE OF ADVANCED RESEARCH AND TECHNOLOGY | | DATE 4-3-65 |
| TEST: INITIAL MEAS.-DC PARAMETER CHARACTERISTICS | SAMPLE NUMBER NOTED | BAROM PRESS IN. HG |
| PART NAME & NUMBER: DTL NAND/NOR GATE - SL 1519 | TEST MEDIUM AIR | WET BULB TEMP 58°F |
| MANUFACT. REF: A | TEST TEMP. 72° F | DRY BULB TEMP 72°F |
| ENGINEER | TECHNICIAN L. Hayes | REV. A |
| REF SPEC | | DATA SHEET NUMBER |

JOB NUMBER AO-138-AE PAGE OF TEST REPORT NO. TR1-1188

GENERAL PRECISION, INC
LIBRASCOPE GROUP

# ENVIRONMENTAL LABORATORY DATA SHEET

GROUP IV - TEMP STEP STRESS GROUP

PARAMETER: DIODE FORWARD CURRENT WITH V10 = 4 VOLTS

| SAMPLE NUMBER | If1 | If2 | If8 | If9 |
|---|---|---|---|---|
| | CURRENT - FULL SCALE = 10 MA | | | |
| 66 | 1512 ' | 1489 ' | 1520 ' | 1507 ' |
| 67 | 1526 ' | 1520 ' | 1555 ' | 1529 ' |
| 68 | 1472 ' | 1460 ' | 1467 ' | 1472 ' |
| 69 | 1490 ' | 1500 ' | 1499 ' | 1499 ' |
| 70 | 1376 ' | 1360 ' | 1345 ' | 1339 ' |
| 71 | 1572 ' | 1573 ' | 1579 ' | 1590 ' |
| 72 | 1440 ' | 1425 ' | 1443 ' | 1450 ' |
| 73 | 1520 ' | 1517 ' | 1504 ' | 1469 ' |
| 74 | 1258 ' | 1243 ' | 1275 ' | 1219 ' |
| 75 | 1408 ' | 1439 ' | 1420 ' | 1379 ' |
| 76 | 1552 ' | 1539 ' | 1550 ' | 1546 ' |
| 77 | 1649 ' | 1650 ' | 1659 ' | 1665 ' |
| 78 | 1520 ' | 1509 ' | 1512 ' | 1480 ' |
| 79 | 1470 ' | 1460 ' | 1492 ' | 1420 ' |
| 80' | 1361 ' | 1349 ' | 1309 ' | 1389 ' |

TEST CONDUCTED: NASA OFFICE OF ADVANCED RESEARCH AND TECHNOLOGY
DATE: 4-3-65
TEST: INITIAL MEAS - DC PARAMETER CHARACTERISTICS
SAMPLE NUMBER: NOTED
DUT NAME & NUMBER: DTL NAND/NOR GATE - SL 1519
TEST MEDIUM: AIR
PRESSURE: 58°F
MANUFACTURER: A
TEST TEMP: 72°F
DATUM TEMP: 72°F
ENGINEER: L. Hayes
REF SPEC:
DATA SHEET:

JOB NUMBER A0-138-AE PAGE OF TEST REPORT NO TR1-1188

GENERAL PRECISION, INC
LIBRASCOPE GROUP

# ENVIRONMENTAL LABORATORY DATA SHEET

GROUP IV- TEMP STEP STRESS GROUP

PARAMETER: DIODE FORWARD CURRENT WITH V10 = 4 VOLTS

| SAMPLE NUMBER | If1 | CURRENT - FULL SCALE = 10 MA If2 | If8 | If9 |
|---|---|---|---|---|
| 81 | 1601 ' | 1599 ' | 1607 ' | 1610 ' |
| 82 | 1498 ' | 1500 ' | 1498 ' | 1500 ' |
| 83 | 1522 ' | 1509 ' | 1511 ' | 1511 ' |
| 84 | 1636 ' | 1645 ' | 1642 ' | 1635 ' |
| 85 | 1634 ' | 1619 ' | 1600 ' | 1619 ' |
| 86 | 1587 ' | 1600 ' | 1532 ' | 1540 ' |
| 87 | 1400 ' | 1385 ' | 1384 ' | 1389 ' |
| 88 | 1510 ' | 1500 ' | 1510 ' | 1520 ' |
| 89 | 1380 ' | 1372 ' | 1375 ' | 1362 ' |
| 90 | 1500 ' | 1485 ' | 1544 ' | 1532 ' |
| 91 | 1539 ' | 1542 ' | 1518 ' | 1529 ' |
| 92 | 1199 ' | 1198 ' | 1219 ' | 1203 ' |
| 93 | 1372 ' | 1366 ' | 0702 ' | 0686 ' |
| 94 | 1488 ' | 1465 ' | 1524 ' | 1540 ' |
| 95 | 1572 ' | 1576 ' | 1538 ' | 1579 ' |
| 96 | 1659 ' | 1670 ' | 1664 ' | 1659 ' |
| 97 | 1420 ' | 1450 ' | 1419 ' | 1444 ' |
| 98 | 1709 ' | 1722 ' | 1710 ' | 1709 ' |
| 99 | 1305 ' | 1320 ' | 1299 ' | 1332 ' |
| 100' | 1456 ' | 1450 ' | 1463 ' | 1449 ' |

| | | |
|---|---|---|
| TEST CONDUCTED: NASA OFFICE OF ADVANCED RESEARCH AND TECHNOLOGY | | DATE 4-3-65 |
| TEST: INITIAL MEAS-DC PARAMETER CHARACTERISTICS | SAMPLE NUMBER NOTED | BAROM. PRESS IN HG |
| PART NAME & NUMBER: DTL NAND/NOR GATE - SL1519 | TEST MEDIUM AIR | WET BULB TEMP 58°F |
| MANUFACTURER: A | TEST TEMP 72°F C. F. | DRY BULB TEMP 72°F |
| ENGINEER | TECHNICIAN L. Hayn | INSPECTOR |
| REF SPEC | | DATA SHEET NUMBER |

JOB NUMBER A0-138-AF PAGE OF TEST REPORT NO TR1-1188

GENERAL PRECISION, INC
LINRASCOPE GROUP

# ENVIRONMENTAL LABORATORY DATA SHEET

GROUP IV - TEMP STEP STRESS GROUP

PARAMETER: DIODE FORWARD CURRENT WITH V10 = 4 VOLTS

| SAMPLE NUMBER | If1 | CURRENT - FULL SCALE = 10 MA If2 | IF6 | If9 |
|---|---|---|---|---|
| 101 | 1510 ' | 1522 ' | 1509 ' | 1520 ' |
| 102 | 1300 ' | 1280 ' | 1239 ' | 1319 ' |
| 103 | 1440 ' | 1439 ' | 1431 ' | 1456 ' |
| 104 | 1539 ' | 1540 ' | 1502 ' | 1532 ' |
| 105 | 1623 ' | 1629 ' | 1630 ' | 1606 ' |
| 106 | 1389 ' | 1385 ' | 1382 ' | 1389 ' |
| 107 | 1530 ' | 1540 ' | 1519 ' | 1522 ' |
| 108 | 1359 ' | 1347 ' | 1342 ' | 1307 ' |
| 109 | 1279 ' | 1249 ' | 1280 ' | 1298 ' |
| 110 | 1500 ' | 1489 ' | 1475 ' | 1475 ' |
| 111 | 1332 ' | 1362 ' | 1339 ' | 1342 ' |
| 112 | 1209 ' | 1209 ' | 1215 ' | 1232 ' |
| 113 | 1419 ' | 1428 ' | 1420 ' | 0046 ' |
| 114 | 1491 ' | 1470 ' | 1489 ' | 1480 ' |
| 115 | 1230 ' | 1245 ' | 1399 ' | 1399 ' |

CALIBRATION CHECK

| CALIBRATION RESISTOR | | CURRENT - FULL SCALE = 10 MA | | |
|---|---|---|---|---|
| 2000 OHMS | 1982 ' | 1989 ' | 1999 ' | 1998 ' |
| 1000 OHMS' | 4001 ' | 4010 ' | 4005 ' | 4000 ' |

| | | |
|---|---|---|
| TEST CONDUCTED FOR: NASA, OFFICE OF ADVANCED RESEARCH AND TECHNOLOGY | | DATE 4-3-65 |
| TEST: INITIAL MEAS-DC PARAMETER CHARACTERISTICS | SAMPLE NUMBER NOTED | BAROM PRESS 30.16 IN HG |
| PART NAME & NO.: DTL NAND/NOR GATE - SL1519 | TEST MEDIUM AIR | WET BULB TEMP 58 °F |
| MANUFACTURER: A | TEST TEMP 71 °F | DRY BULB TEMP 71 °F |
| ENGINEER | TECHNICIAN | INSPECTOR |
| REF SPEC. | | DATA SHEET NUMBER |

JOB NUMBER AO-138-AE PAGE OF TEST REPORT NO. TR1-1188

GENERAL PRECISION, INC.
LIBRASCOPE GROUP

# ENVIRONMENTAL LABORATORY DATA SHEET

GROUP I - INSTRUMENTATION CONTROL

PARAMETER: OUTPUT SATURATION VOLTAGE WITH V10 = 4 VOLTS - I4 = 10 MA (SECTION I)
V10 = 4 VOLTS - I6 = 10 MA (SECTION II)

CALIBRATION CHECK AT 10 MA AND 1 MA

| CALIBRATION RESISTOR | VOLTAGE - FULL SCALE = 10 VOLTS | | |
|---|---|---|---|
| 500 OHMS | 0496 ' | 0498 ' | 0498 ' |
| 50 OHMS | 0498 ' | 0498 ' | 0498 ' |

| SAMPLE NUMBER | VOLTAGE - FULL SCALE = 10 VOLTS SECTION I V4 | SECTION II V6 |
|---|---|---|
| 1 | 0285 ' | 0261 ' |
| 2 | 0238 ' | 0239 ' |
| 3 | 0278 ' | 0279 ' |
| 4 | 0220 ' | 0223 ' |
| 5' | 0263 ' | 0253 ' |

| | | |
|---|---|---|
| TEST CONDUCTED FOR: NASA OFFICE OF ADVANCED RESEARCH AND TECHNOLOGY | | DATE: 4-5-65 |
| TEST: INITIAL MEAS. - D.C. PARAMETER CHARACTERISTICS | SAMPLE NUMBER: NOTED | BAROM. PRESS. 30.21 IN. HG |
| PART NAME & NUMBER: DTL NAND/NOR GATE - SL1519 | TEST MEDIUM: AIR | WET BULB TEMP. 68 °F |
| MANUFACTURER: A | TEST TEMP. 72° C. ☐ F. ☒ | DRY BULB TEMP. 72 °F |
| ENGINEER | TECHNICIAN | INSPECTOR |
| REF. SPEC. | | DATA SHEET NUMBER |

JOB NUMBER A0-138-AE PAGE OF TEST REPORT NO. TR1-1188

601-2
1/64

GENERAL PRECISION, INC.
LIBRASCOPE GROUP

# ENVIRONMENTAL LABORATORY DATA SHEET

GROUP II - LIFE TEST GROUP

PARAMETER: OUTPUT SATURATION VOLTAGE WITH V10 = 4 VOLTS - I4 = 10 MA (SECTION I)
V10 = 4 VOLTS - I6 = 10 MA (SECTIONII)

VOLTAGE - FULL SCALE = 10 VOLTS

| SAMPLE NUMBER | SECTION I V4 | SECTION II V6 |
|---|---|---|
| 6 | 0282 ' | 0281 ' |
| 7 | 0234 ' | 0221 ' |
| 8 | 0290 ' | 0285 ' |
| 9 | 0275 ' | 0280 ' |
| 10 | 0284 ' | 0273 ' |
| 11 | 0240 ' | 0242 ' |
| 12 | 0315 ' | 0310 ' |
| 13 | 0289 ' | 0266 ' |
| 14 | 0227 ' | 0215 ' |
| 15 | 0293 ' | 0275 ' |
| 16 | 0322 ' | 0313 ' |
| 17 | 0277 ' | 0269 ' |
| 18 | 0262 ' | 0262 ' |
| 19 | 0265 ' | 0252 ' |
| 20 | 0288 ' | 0280 ' |
| 21 | 0281 ' | 0275 ' |
| 22 | 0223 ' | 0230 ' |
| 23 | 0281 ' | 0285 ' |
| 24 | 0259 ' | 0261 ' |
| 25' | 0276 ' | 0287 ' |

| | | |
|---|---|---|
| TEST CONDUCTED FOR: NASA, OFFICE OF ADVANCED RESEARCH AND TECHNOLOGY | | DATE: 4-5-65 |
| TEST: INITIAL MEAS - D.C. PARAMETER CHARACTERISTICS | SAMPLE NUMBER: NOTED | BAROM PRESS: 30.21 IN. HG |
| PART NAME & NUMBER: DTL NAND/NOR GATE - SL1519 | TEST MEDIUM: AIR | WET BULB TEMP: 68°F |
| MANUFACTURER: A | TEST TEMP. 72° C. ☐ F. ☒ | DRY BULB TEMP. 72°F |
| ENGINEER / TECHNICIAN | INSPECTOR | |
| REF. SPEC. | DATA SHEET NUMBER | |

JOB NUMBER AO-138-AE PAGE OF TEST REPORT NO. TR1-1188

601-2
1/64

GENERAL PRECISION, INC.
LIBRASCOPE GROUP

# ENVIRONMENTAL LABORATORY DATA SHEET

## GROUP II - LIFE TEST GROUP

PARAMETER: OUTPUT SATURATION VOLTAGE WITH V10 = 4 VOLTS - I4 = 10 MA (SECTION I)
V10 = 4 VOLTS - I6 = 10 MA (SECTION II)

VOLTAGE - FULL SCALE = 10 VOLTS

| SAMPLE NUMBER | SECTION I V4 | SECTION II V6 |
|---|---|---|
| 26 | 0253 ' | 0229 ' |
| 27 | 0243 ' | 0253 ' |
| 28 | 0259 ' | 0272 ' |
| 29 | 0281 ' | 0285 ' |
| 30 | 0261 ' | 0257 ' |
| 31 | 0231 ' | 0232 ' |
| 32 | 0251 ' | 0255 ' |
| 33 | 0276 ' | 0276 ' |
| 34 | 0256 ' | 0248 ' |
| 35 | 0255 ' | 0249 ' |
| 36 | 0281 ' | 0271 ' |
| 37 | 0308 ' | 0309 ' |
| 38 | 0307 ' | 0315 ' |
| 39 | 0258 ' | 0268 ' |
| 40 | 0233 ' | 0240 ' |
| 41 | 0262 ' | 0254 ' |
| 42 | 0305 ' | 0305 ' |
| 43 | 0279 ' | 0269 ' |
| 44 | 0278 ' | 0275 ' |
| 45 | 0248 ' | 0255 ' |

CALIBRATION CHECK AT 10 MA AND 1 MA

VOLTAGE - FULL SCALE = 10 VOLTS

| CALIBRATION RESISTOR | | | |
|---|---|---|---|
| 500 OHMS | 0498 ' | 0497 ' | 0498 ' |
| 50 OHMS' | 0499 ' | 0499 ' | 0499 ' |

| | | |
|---|---|---|
| TEST CONDUCTED FOR: NASA, OFFICE OF ADVANCED RESEARCH AND TECHNOLOGY | | DATE: 4-5-65 |
| TEST: INITIAL MEAS-DC PARAMETER CHARACTERISTICS | SAMPLE NUMBER: NOTED | BAROM. PRESS. 30.21 IN. HG. |
| PART NAME & NUMBER: DTL NAND/NOR GATE - SL 1519 | TEST MEDIUM: AIR | WET BULB TEMP. 68° F |
| MANUFACTURER: A | TEST TEMP. 72° C. ☐ F. ☒ | DRY BULB TEMP. 72° F |
| ENGINEER | TECHNICIAN | INSPECTOR |
| REF. SPEC. | | DATA SHEET NUMBER |

JOB NUMBER AA-138-AE PAGE OF TEST REPORT NO. TR1-1188

601-2
1/64

GENERAL PRECISION, INC.
LIBRASCOPE GROUP

# ENVIRONMENTAL LABORATORY DATA SHEET

GROUP III - TEMP CYCLE STEP STRESS GROUP

PARAMETER: OUTPUT SATURATION VOLTAGE WITH V10 = 4 VOLTS - I4 = 10 MA (SECTION I)
V10 = 4 VOLTS - I6 = 10 MA (SECTION II)

VOLTAGE - FULL SCALE = 10 VOLTS

| SAMPLE NUMBER | SECTION I V4 | SECTION II V6 |
|---|---|---|
| 46 | 0296 ' | 0301 ' |
| 47 | 0267 ' | 0245 ' |
| 48 | 0267 ' | 0271 ' |
| 49 | 0261 ' | 0252 ' |
| 50 | 0306 ' | 0306 ' |
| 51 | 0295 ' | 0299 ' |
| 52 | 0262 ' | 0263 ' |
| 53 | 0295 ' | 0291 ' |
| 54 | 0260 ' | 0260 ' |
| 55 | 0321 ' | 0324 ' |
| 56 | 0261 ' | 0261 ' |
| 57 | 0308 ' | 0316 ' |
| 58 | 0259 ' | 0254 ' |
| 59 | 0285 ' | 0292 ' |
| 60 | 0239 ' | 0221 ' |
| 61 | 0255 ' | 0252 ' |
| 62 | 0256 ' | 0258 ' |
| 63 | 0249 ' | 0251 ' |
| 64 | 0262 ' | 0278 ' |
| 65 | 0279 ' | 0261 ' |

CALIBRATION CHECK AT 10 MA AND 1 MA

VOLTAGE - FULL SCALE = 10 VOLTS

| CALIBRATION RESISTOR | | | |
|---|---|---|---|
| 500 OHMS | 0497 ' | 0495 ' | 0498 ' |
| 50 OHMS' | 0498 ' | 0499 ' | 0495 ' |

| | | |
|---|---|---|
| TEST CONDUCTED FOR: NASA OFFICE OF ADVANCED RESEARCH AND TECHNOLOGY | | DATE: 4-5-65 |
| TEST: INITIAL MEAS-DC PARAMETER CHARACTERISTICS | SAMPLE NUMBER: NOTED | BAROM. PRESS. IN. HG.: 30.21 |
| PART NAME & NUMBER: DTL NAND/NOR GATE - SL 1519 | TEST MEDIUM: AIR | WET BULB TEMP.: 68°F |
| MANUFACTURER: A | TEST TEMP.: 72° C. ☐ F. ☒ | DRY BULB TEMP.: 72°F |
| ENGINEER | TECHNICIAN | INSPECTOR |
| REF. SPEC. | | DATA SHEET NUMBER |

JOB NUMBER AD-138-AE PAGE OF TEST REPORT NO. TR1-1188

601-2
1/64

GENERAL PRECISION, INC.
LIBRASCOPE GROUP

# ENVIRONMENTAL LABORATORY DATA SHEET

## GROUP IV - TEMP STEP STRESS GROUP

PARAMETER: OUTPUT SATURATION VOLTAGE WITH V10 = 4 VOLTS - I4 = 10 MA (SECTION I)
V10 = 4 VOLTS - I6 = 10 MA (SECTION II)

VOLTAGE - FULL SCALE = 10 VOLTS

| SAMPLE NUMBER | SECTION I V4 | SECTION II V6 |
|---|---|---|
| 66 | 0223 ' | 0223 ' |
| 67 | 0277 ' | 0281 ' |
| 68 | 0222 ' | 0219 ' |
| 69 | 0245 ' | 0241 ' |
| 70 | 0279 ' | 0270 ' |
| 71 | 0230 ' | 0228 ' |
| 72 | 0271 ' | 0276 ' |
| 73 | 0261 ' | 0262 ' |
| 74 | 0303 ' | 0301 ' |
| 75 | 0299 ' | 0294 ' |
| 76 | 0251 ' | 0251 ' |
| 77 | 0219 ' | 0225 ' |
| 78 | 0281 ' | 0258 ' |
| 79 | 0283 ' | 0285 ' |
| 80' | 0323 ' | 0317 ' |

| | | |
|---|---|---|
| TEST CONDUCTED FOR: NASA, OFFICE OF ADVANCED RESEARCH AND TECHNOLOGY | | DATE: 4-5-65 |
| TEST: INITIAL MEAS.-D.C. PARAMETER CHARACTERISTICS | SAMPLE NUMBER: NOTED | BAROM PRESS. IN. HG.: 30.21 |
| PART NAME & NUMBER: DTL NAND/NOR GATE - SL1519 | TEST MEDIUM: AIR | WET BULB TEMP.: 68°F |
| MANUFACTURER: A | TEST TEMP.: 72° C. ☐ F. ☒ | DRY BULB TEMP.: 72°F |
| ENGINEER | TECHNICIAN | INSPECTOR |
| REF. SPEC. | | DATA SHEET NUMBER |

JOB NUMBER Ao-138-AF PAGE OF TEST REPORT NO. TR1-1188

681-2
1/64

GENERAL PRECISION, INC.
LIBRASCOPE GROUP

# ENVIRONMENTAL LABORATORY DATA SHEET

GROUP IV - TEMP STEP STRESS GROUP

PARAMETER: OUTPUT SATURATION VOLTAGE WITH V10 = 4 VOLTS - I4 = 10 MA (SECTION I)
V10 = 4 VOLTS - I6 = 10 MA (SECTION II)

VOLTAGE - FULL SCALE = 10 VOLTS

| SAMPLE NUMBER | SECTION I V4 | SECTION II V6 |
|---|---|---|
| 81 | 0235 ' | 0211 ' |
| 82 | 0276 ' | 0272 ' |
| 83 | 0287 ' | 0275 ' |
| 84 | 0272 ' | 0275 ' |
| 85 | 0265 ' | 0272 ' |
| 86 | 0254 ' | 0272 ' |
| 87 | 0299 ' | 0292 ' |
| 88 | 0306 ' | 0301 ' |
| 89 | 0271 ' | 0281 ' |
| 90 | 0232 ' | 0221 ' |
| 91 | 0249 ' | 0225 ' |
| 92 | 0295 ' | 0285 ' |
| 93 | 0286 ' | 0275 ' |
| 94 | 0249 ' | 0252 ' |
| 95 | 0294 ' | 0292 ' |
| 96 | 0220 ' | 0230 ' |
| 97 | 0292 ' | 0295 ' |
| 98 | 0244 ' | 0241 " |
| 99 | 0285 ' | 0282 ' |
| 100' | 0248 ' | 0249 ' |

| | | |
|---|---|---|
| TEST CONDUCTED FOR: NASA OFFICE OF ADVANCED RESEARCH AND TECHNOLOGY | | DATE: 4-5-65 |
| TEST: INITIAL MEAS-DC PARAMETER CHARACTERISTICS | SAMPLE NUMBER: NOTED | BAROM. PRESS. 30.21 IN. HG. |
| PART NAME & NUMBER: DTL NAND/NOR GATE-SL1519 | TEST MEDIUM: AIR | WET BULB TEMP. 68°F |
| MANUFACTURER: A | TEST TEMP. 72° C. ☐ F. ☒ | DRY BULB TEMP. 72°F |
| ENGINEER | TECHNICIAN | INSPECTOR |
| REF. SPEC. | | DATA SHEET NUMBER |

JOB NUMBER AO-128-AF PAGE OF TEST REPORT NO. TR1-1188

601-2
1/64

GENERAL PRECISION, INC.
LIBRASCOPE GROUP

# ENVIRONMENTAL LABORATORY DATA SHEET

GROUP IV - TEMP STEP STRESS GROUP

PARAMETER: OUTPUT SATURATION VOLTAGE WITH V10 = 4 VOLTS - I4 = 10 MA (SECTION I)
V10 = 4 VOLTS - I6 = 10 MA (SECTION II)

VOLTAGE- FULL SCALE = 10 VOLTS

| SAMPLE NUMBER | SECTION I V4 | SECTION II V6 |
|---|---|---|
| 101 | 0276 ' | 0276 ' |
| 102 | 0305 ' | 0299 ' |
| 103 | 0304 ' | 0303 ' |
| 104 | 0313 ' | 0307 ' |
| 105 | 0265 ' | 0270 ' |
| 106 | 0276 ' | 0273 ' |
| 107 | 0259 ' | 0263 ' |
| 108 | 0283 ' | 0296 ' |
| 109 | 0310 ' | 0303 ' |
| 110 | 0261 ' | 0282 ' |
| 111 | 0281 ' | 0280 ' |
| 112 | 0315 ' | 0306 ' |
| 113 | 0258 ' | 0262 ' |
| 114 | 0278 ' | 0275 ' |
| 115 | 0312 ' | 0331 ' |

CALIBRATION CHECK AT 10 MA AND 1 MA

VOLTAGE - FULL SCALE = 10 VOLTS

| CALIBRATION RESISTOR | | | |
|---|---|---|---|
| 500 OHMS | 0496 ' | 0497 ' | 0498 ' |
| 50 OHMS' | 0500 ' | 0497 ' | 0497 ' |

| | | |
|---|---|---|
| TEST CONDUCTED FOR: NASA, OFFICE OF ADVANCED RESEARCH AND TECHNOLOGY | | DATE: 4-5-65 |
| TEST: INITIAL MEAS-D.C PARAMETER CHARACTERISTICS | SAMPLE NUMBER: NOTED | BAROM PRESS. 30.21 IN. HG. |
| PART NAME & NUMBER: DTL NAND/NOR GATE - SL1519 | TEST MEDIUM: AIR | WET BULB TEMP. 68°F |
| MANUFACTURER: A | TEST TEMP. 72° C. ☐ F. ☒ | DRY BULB TEMP. 72°F |
| ENGINEER / TECHNICIAN | INSPECTOR | |
| REF. SPEC. | DATA SHEET NUMBER | |

JOB NUMBER Ao-132-AE PAGE OF TEST REPORT NO. TR1-1188

601-2
1/64

GENERAL PRECISION, INC.
LIBRASCOPE GROUP

# ENVIRONMENTAL LABORATORY DATA SHEET

TEST CONDITIONS:
IF RETEST CHECK ☐

$I_B$ in μamps

| | # | $I_B$ | | # | $I_B$ | | # | $I_B$ |
|---|---|---|---|---|---|---|---|---|
| GROUP I | 1 | 380. | | 26 | 373. | | 46 | 301. |
| | 2 | 381. | | 27 | 317. | | 47 | 373. |
| | 3 | 310. | | 28 | 353. | | 48 | 311. |
| | 4 | 299. | | 29 | 346. | | 49 | 378. |
| | 5 | 301. | | 30 | 330. | | 50 | 275. |
| | | | | 31 | 313. | | 51 | 255. |
| GROUP II | 6 | 332. | | 32 | 291. | | 52 | 310. |
| | 7 | 361. | | 33 | 357. | | 53 | 298. |
| | 8 | 372. | | 34 | 380. | | 54 | 299. |
| | 9 | 308. | | 35 | 316. | | 55 | 314. |
| | 10 | 293. | | 36 | 329. | | 56 | 392. |
| | 11 | 269. | | 37 | 315. | | 57 | 326. |
| | 12 | 297. | | 38 | 278. | | 58 | 395. |
| | 13 | 390. | | 39 | 274. | | 59 | 308. |
| | 14 | 391. | | 40 | 388. | | 60 | 285. |
| | 15 | 314. | | 41 | 330. | | 61 | 273. |
| | 16 | 367. | | 42 | 297. | | 62 | 332. |
| | 17 | 332. | | 43 | 287. | | 63 | 362. |
| | 18 | 397. | | 44 | 322. | | 64 | 365. |
| | 19 | 386. | | 45 | 294. | | 65 | 344. |
| | 20 | 279. | | | | | | |
| | 21 | 293. | | | | | | |
| | 22 | 299. | | | | | | |
| | 23 | 388. | | | | | | |
| | 24 | 305. | | | | | | |
| | 25 | 300. | | | | | | |

| | | | |
|---|---|---|---|
| TEST CONDUCTED FOR: NASA, OFFICE OF ADVANCED RESEARCH AND TECHNOLOGY | | | DATE: 4-6-65 |
| TEST: INITIAL MEAS-D.C PARAMETER CHARACTERISTICS | SAMPLE NUMBER: NOTED | | BAROM. PRESS.: 30.22 IN. HG. |
| PART NAME & NUMBER: DTL NAND/NOR GATE - SL1519 | TEST MEDIUM: AIR | | WET BULB TEMP.: 59°F |
| MANUFACTURER: A | TEST TEMP.: 72°F | C. ☐ F. ☐ | DRY BULB TEMP.: 72°F |
| ENGINEER | TECHNICIAN: [illegible] | INSPECTOR | |
| REF. SPEC. | | DATA SHEET NUMBER | |

JOB NUMBER Ao-138-AE PAGE OF TEST REPORT NO. TR1-1188

601-2
1/64

GENERAL PRECISION, INC.
LIBRASCOPE GROUP

# ENVIRONMENTAL LABORATORY DATA SHEET

GROUP IV - TEMP STEP STRESS GROUP

| SAMPLE NUMBER | BV1 | VOLTAGE - FULL SCALE = 10 VOLTS BV2 | BV8 | BV9 |
|---|---|---|---|---|
| 101 | 6225 | 5870 | 5747 | 5584 |
| 102 | 6243 | 5738 | 5745 | 5767 |
| 103 | 6025 | 6240 | 5320 | 5684 |
| 104 | 5331 | 6125 | 5444 | 5553 |
| 105 | 5979 | 6020 | 5632 | 5770 |
| 106 | 5248 | 6023 | 5108 | 5330 |
| 107 | 5690 | 5731 | 5750 | 5894 |
| 108 | 5883 | 6171 | 4893 | 4992 |
| 109 | 6281 | 6362 | 5851 | 5789 |
| 110 | 6216 | 6308 | 5625 | 5322 |
| 111 | 6338 | 6149 | 4980 | 5534 |
| 112 | 6353 | 6364 | 5822 | 5834 |
| 113 | 5626 | 6180 | 5670 | |
| 114 | 6210 | 5886 | 5290 | 5464 |
| 115 | 6274 | 6212 | 5888 | 5669 |

CALIBRATION CHECK

| PROGRAM RESISTOR | VOLTAGE - FULL SCALE = 100 VOLTS | | |
|---|---|---|---|
| 20 MEG | 2002 | 2002 | 2002 |
| 10 MEG | 1000 | 1000 | 1000 |
| 5 MEG' | 5013 | 5013 | 5013 |

| | | |
|---|---|---|
| TEST CONDUCTED FOR: NASA OFFICE OF ADVANCED RESEARCH AND TECHNOLOGY | | DATE: 4-21-65 |
| TEST: POST - 240 HR. MEAS. | SAMPLE NUMBER: NOTED | BAROM. PRESS. IN. HG. |
| PART NAME & NUMBER: DTL NAND/NOR GATE-SL1519 | TEST MEDIUM: AIR | WET BULB TEMP: 62°F |
| MANUFACTURER: A | TEST TEMP.: 72° C. ☐ F. ☑ | DRY BULB TEMP.: 72°F |
| ENGINEER | TECHNICIAN: BOGAN | INSPECTOR |
| REF. SPEC. | | DATA SHEET NUMBER |

JOB NUMBER AO-139-AE PAGE OF TEST REPORT NO. TR1-1188

601-2
1/64

GENERAL PRECISION, INC.
LIBRASCOPE GROUP

# ENVIRONMENTAL LABORATORY DATA SHEET

GROUP IV - TEMP STEP STRESS GROUP

| SAMPLE NUMBER | BV1 | VOLTAGE - FULL SCALE = 10 VOLTS BV2 | BV8 | BV9 |
|---|---|---|---|---|
| 81 | 5375 | 5723 | 5237 | 5338 |
| 82 | 5432 | 6091 | 5521 | 5673 |
| 83 | 6275 | 5940 | 5450 | 5483 |
| 84 | 6521 | 6044 | 5982 | 5974 |
| 85 | 5624 | 5855 | 5285 | 5216 |
| 86 | 6082 | 5863 | 5432 | 4379 |
| 87 | 6203 | 6018 | 5570 | 5828 |
| 88 | 6409 | 6331 | 5241 | 5668 |
| 89 | 5875 | 5954 | 5650 | 5690 |
| 90 | 5940 | 5100 | 5134 | 5261 |
| 91 | 5906 | 5439 | 5458 | 5456 |
| 92 | 5963 | 6339 | 5367 | 5295 |
| 93 | 6099 | 6053 | 5531 | 5510 |
| 94 | 6278 | 6373 | 5903 | 5818 |
| 95 | 6034 | 6155 | 5640 | 5767 |
| 96 | 6358 | 6396 | 5894 | 5921 |
| 97 | 5573 | 4772 | 5100 | 5393 |
| 98 | 6168 | 6197 | 5250 | 5096 |
| 99 | 5888 | 6171 | 5857 | 5722 |
| 100' | 3931 | 5950 | 5837 | 5826 |

| | | |
|---|---|---|
| TEST CONDUCTED FOR: NASA, OFFICE OF ADVANCED RESEARCH AND TECHNOLOGY | | DATE: 4-21-65 |
| TEST: POST - 240 HR. MEAS. | SAMPLE NUMBER: NOTED | BAROM PRESS. IN. HG. |
| PART NAME & NUMBER: DTL NAND/NOR GATE - SL1519 | TEST MEDIUM: AIR | WET BULB TEMP.: 62°F |
| MANUFACTURER: A | TEST TEMP.: 72° C. ☐ F. ☑ | DRY BULB TEMP.: 72°F |
| ENGINEER | TECHNICIAN: BOLAN | INSPECTOR |
| REF. SPEC. | | DATA SHEET NUMBER |

JOB NUMBER AO-138-AE PAGE OF TEST REPORT NO. TR1-1188

601-2
1/64

GENERAL PRECISION, INC.
LIBRASCOPE GROUP

# ENVIRONMENTAL LABORATORY DATA SHEET

GROUP IV - TEMP STEP STRESS GROUP

VOLTAGE - FULL SCALE = 10 VOLTS

| SAMPLE NUMBER | BV1 | BV2 | BV8 | BV9 |
|---|---|---|---|---|
| 66 | 6309 | 6441 | 5727 | 5864 |
| 67 | 6260 | 6360 | 5747 | 5765 |
| 68 | 5598 | 6277 | 5849 | 5807 |
| 69 | 5928 | 6554 | 5965 | 6016 |
| 70 | 6173 | 6325 | 5766 | 5754 |
| 71 | 6421 | 6228 | 5532 | 5896 |
| 72 | 5870 | 5726 | 5238 | 5288 |
| 73 | 4630 | 6191 | 5540 | 5039 |
| 74 | 6320 | 5447 | 5306 | 5554 |
| 75 | 5573 | 5417 | 5825 | 5360 |
| 76 | 6571 | 5600 | 5685 | 5661 |
| 77 | 6415 | 6205 | 5888 | 5896 |
| 78 | 5977 | 5543 | 5216 | 4883 |
| 79 | 6075 | 5972 | 5533 | 5745 |
| 80 | 6223 | 6384 | 5730 | 5597 |

| | | |
|---|---|---|
| TEST CONDUCTED FOR: NASA, OFFICE OF ADVANCED RESEARCH AND TECHNOLOGY | | DATE: 4-21-65 |
| TEST: POST - 240 HR MEAS. | SAMPLE NUMBER: NOTED | BAROM. PRESS. IN. HG. |
| PART NAME & NUMBER: DTL NAND/NOR GATE - SL1519 | TEST MEDIUM: AIR | WET BULB TEMP.: 62°F |
| MANUFACTURER: A | TEST TEMP.: 72° C. ☐ F. ☒ | DRY BULB TEMP.: 72°F |
| ENGINEER | TECHNICIAN: BOLAN | INSPECTOR |
| REF. SPEC. | | DATA SHEET NUMBER |

JOB NUMBER AO-138-AE PAGE OF TEST REPORT NO. TRI-1188

601-2
1/64

GENERAL PRECISION, INC.
LIBRASCOPE GROUP

# ENVIRONMENTAL LABORATORY DATA SHEET

GROUP I - INSTRUMENTATION CONTROL

CALIBRATION CHECK - BREAKDOWN VOLTAGE AT 1UA

| CALIBRATION RESISTOR | VOLTAGE - FULL SCALE = 100 VOLTS | | |
|---|---|---|---|
| 20 MEG | 2002 | 2002 | 2002 |
| 10 MEG | 1000 | 1000 | 1000 |
| 5 MEG | 5012 | 5013 | 5013 |

| SAMPLE NUMBER | VOLTAGE - FULL SCALE = 10 VOLTS | | | |
|---|---|---|---|---|
| | BV1 | BV2 | BV8 | BV9 |
| 1 | 4767 | 6051 | 5194 | 5458 |
| 2 | 6045 | 6045 | 5155 | 5510 |
| 3 | 5754 | 6190 | 5562 | 5330 |
| 4 | 6074 | 6210 | 5467 | 5831 |
| 5' | 5170 | 5513 | 5207 | 5210 |

| | | |
|---|---|---|
| TEST CONDUCTED FOR: NASA, OFFICE OF ADVANCED RESEARCH AND TECHNOLOGY | | DATE: 4-21-65 |
| TEST: POST - 240 HR. MEAS | SAMPLE NUMBER: NOTED | BAROM. PRESS. IN. HG. |
| PART NAME & NUMBER: DTL NAND/NOR GATE - SL 1519 | TEST MEDIUM: AIR | WET BULB TEMP. 62°F |
| MANUFACTURER: A | TEST TEMP. 72 C ☐ F ☑ | DRY BULB TEMP. 72°F |
| ENGINEER | TECHNICIAN: BOLAW | INSPECTOR |
| REF. SPEC. | | DATA SHEET NUMBER |

JOB NUMBER AO-138-AE PAGE OF TEST REPORT NO. TR1-1188

481-2
1/64

GENERAL PRECISION, INC.
LIBRASCOPE GROUP

# ENVIRONMENTAL LABORATORY DATA SHEET

TEST CONDITIONS:
IF RETEST CHECK ☐ $I_B$ in μamps

| | # | $I_B$ | | | | # | $I_B$ | | |
|---|---|---|---|---|---|---|---|---|---|
| GROUP II | 66 | 295. | | | | 91 | 364. | | |
| | 67 | 332. | | | | 92 | 401. | | |
| | 68 | 276. | | | | 93 | — | | |
| | 69 | 285. | | | | 94 | 287. | | |
| | 70 | 291. | | | | 95 | 336. | | |
| | 71 | 293. | | | | 96 | 354. | | |
| | 72 | 308. | | | | 97 | 297. | | |
| | 73 | 336. | | | | 98 | 351. | | |
| | 74 | 261. | | | | 99 | 307. | | |
| | 75 | 302. | | | | 100 | 280. | | |
| | 76 | 293. | | | | 101 | 337. | | |
| | 77 | 313. | | | | 102 | 278. | | |
| | 78 | 376. | | | | 103 | 305. | | |
| | 79 | 304. | | | | 104 | 326. | | |
| | 80 | 295. | | | | 105 | 346. | | |
| | 81 | 365. | | | | 106 | 308. | | |
| | 82 | 338. | | | | 107 | 301. | | |
| | 83 | 334. | | | | 108 | 320. | | |
| | 84 | 321. | | | | 109 | 277. | | |
| | 85 | 357. | | | | 110 | 330. | | |
| | 86 | 382. | | | | 111 | 311. | | |
| | 87 | 313. | | | | 112 | 256. | | |
| | 88 | 305. | | | | 113 | 346. | | |
| | 89 | 313. | | | | 114 | 333. | | |
| | 90 | 352. | | | | 115 | 400. | | |

| | | | |
|---|---|---|---|
| TEST CONDUCTED FOR: NASA, OFFICE OF ADVANCED RESEARCH AND TECHNOLOGY | | | DATE: 4-6-65 |
| TEST: INITIAL MEAS-DC PARAMETER CHARACTERISTICS | SAMPLE NUMBER: NOTED | | BAROM. PRESS. 30.22 IN. HG. |
| PART NAME & NUMBER: DTL NAND/NOR GATE — SL1519 | TEST MEDIUM: AIR | | WET BULB TEMP. 59°F |
| MANUFACTURER: A | TEST TEMP. 72°F C. ☐ F. ☐ | | DRY BULB TEMP. 72°F |
| ENGINEER | TECHNICIAN: TE Nassem | INSPECTOR | |
| REF. SPEC. | | DATA SHEET NUMBER | |

JOB NUMBER A0-138-AE PAGE OF TEST REPORT NO. TR1-1188

601-2
1/64

GENERAL PRECISION, INC.
LIBRASCOPE GROUP

# ENVIRONMENTAL LABORATORY DATA SHEET

GROUP I - INSTRUMENTATION CONTROL

PARAMETER: LEAKAGE CURRENT NO. 1 AT 4 VOLTS
CALIBRATION CHECK WITH 10 MEG

| CALIBRATION VOLTAGE | CURRENT - FULL SCALE = 100NA | | |
|---|---|---|---|
| 1.0 V | 0996 ' | 0992 ' | 0992 ' |
| 0.5 V | 0495 ' | 0492 ' | 0491 ' |

| SAMPLE NUMBER | LEAKAGE CURRENT - FULL SCALE = 100NA | | | |
|---|---|---|---|---|
| | I1 | I2 | I8 | I9 |
| 1 | 1663 ' | 0165 ' | 0633 ' | 0227 ' |
| 2 | 0207 ' | 0200 ' | 1659 ' | 0385 ' |
| 3 | 0495 ' | 0423 ' | 1204 ' | 1349 ' |
| 4 | 1393 ' | 0177 ' | 0183 ' | 0085 ' |
| 5' | 1660 ' | 1101 ' | 1655 ' | 1653 ' |

| | | |
|---|---|---|
| TEST CONDUCTED FOR: NASA OFFICE OF ADVANCED RESEARCH AND TECHNOLOGY | | DATE: 23 APRIL 1965 |
| TEST: POST - 240 HR. MEAS | SAMPLE NUMBER: NOTED | BAROM. PRESS. IN. HG. |
| PART NAME & NUMBER: DTL NAND/NOR GATE - SL 1519 | TEST MEDIUM: AIR | WET BULB TEMP. 62° F |
| MANUFACTURER: A | TEST TEMP. 72° C. ☐ F. ☒ | DRY BULB TEMP. 72° F |
| ENGINEER | TECHNICIAN: J. CALLEY | INSPECTOR |
| REF. SPEC. | | DATA SHEET NUMBER |

JOB NUMBER AD-138-AE PAGE OF TEST REPORT NO. TR1-1188

2011
4/65

GENERAL PRECISION, INC.
LIBRASCOPE GROUP

# ENVIRONMENTAL LABORATORY DATA SHEET

GROUP IV - TEMPERATURE STEP STRESS

PARAMETER: LEAKAGE CURRENT NO. 1 AT 4 VOLTS

| SAMPLE NUMBER | CURRENT - FULL SCALE = 100NA | | | |
|---|---|---|---|---|
| | I1 | I2 | I8 | I9 |
| 66 | 0169 ' | 0058 ' | 0138 ' | 0121 ' |
| 67 | 0085 ' | 0039 ' | 0413 ' | 0222 ' |
| 68 | 0407 ' | 0039 ' | 0218 ' | 0111 ' |
| 69 | 0136 ' | 0241 ' | 0829 ' | 0078 ' |
| 70 | 0351 ' | 0092 ' | 0214 ' | 0235 ' |
| 71 | 0118 ' | 0198 ' | 0146 ' | 0417 ' |
| 72 | 0839 ' | 1333 ' | 1643 ' | 0400 ' |
| 73 | 1654 ' | 0445 ' | 0749 ' | 1029 ' |
| 74 | 0253 ' | 1652 ' | 1642 ' | 0251 ' |
| 75 | 1158 ' | 1646 ' | 0277 ' | 1050 ' |
| 76 | 0055 ' | 1652 ' | 1657 ' | 1647 ' |
| 77 | 0041 ' | 0024 ' | 0069 ' | 0058 ' |
| 78 | 0321 ' | 0237 ' | 0393 ' | 1653 ' |
| 79 | 0486 ' | 0428 ' | 0990 ' | 0586 ' |
| 80' | 0108 ' | 0104 ' | 0962 ' | 0669 ' |

| | | |
|---|---|---|
| TEST CONDUCTED FOR: NASA, OFFICE OF ADVANCED RESEARCH AND TECHNOLOGY | | DATE: 23 APRIL 1965 |
| TEST: POST-240 HR. MEAS. | SAMPLE NUMBER: NOTED | BAROM. PRESS. IN. HG. |
| PART NAME & NUMBER: DTL NAND/NOR GATE-SL1519 | TEST MEDIUM: AIR | WET BULB TEMP. 62° F |
| MANUFACTURER: A | TEST TEMP. 72° C. ☐ F. ☒ | DRY BULB TEMP. 72° F |
| ENGINEER | TECHNICIAN: J. CALLEY | INSPECTOR |
| REF. SPEC. | | DATA SHEET NUMBER |

JOB NUMBER A0-138-AE PAGE OF TEST REPORT NO. TR1-1188

2011
4/65

GENERAL PRECISION, INC.
LIBRASCOPE GROUP

# ENVIRONMENTAL LABORATORY DATA SHEET

GROUP IV - TEMPERATURE STEP STRESS

PARAMETER: LEAKAGE CURRENT NO. 1 AT 4 VOLTS

CURRENT - FULL SCALE = 100NA

| SAMPLE NUMBER | I1 | I2 | I8 | I9 |
|---|---|---|---|---|
| 81 | 1027 ' | 0959 ' | 0665 ' | 1336 ' |
| 82 | 0363 ' | 0279 ' | 0829 ' | 0353 ' |
| 83 | 0093 ' | 0556 ' | 0500 ' | 0667 ' |
| 84 | 0031 ' | 0150 ' | 0154 ' | 0046 ' |
| 85 | 1304 ' | 0883 ' | 0937 ' | 1043 ' |
| 86 | 0185 ' | 0859 ' | 0284 ' | 1657 ' |
| 87 | 0540 ' | 1610 ' | 1650 ' | 0587 ' |
| 88 | 0160 ' | 0104 ' | 0162 ' | 0188 ' |
| 89 | 1318 ' | 0722 ' | 0621 ' | 0448 ' |
| 90 | 0415 ' | 1654 ' | 1651 ' | 1651 ' |
| 91 | 0591 ' | 0888 ' | 0516 ' | 0361 ' |
| 92 | 0343 ' | 0056 ' | 0564 ' | 1143 ' |
| 93 | 0117 ' | 0152 ' | 0373 ' | 0307 ' |
| 94 | 0190 ' | 0084 ' | 0125 ' | 0252 ' |
| 95 | 0490 ' | 0531 ' | 0324 ' | 0219 ' |
| 96 | 0066 ' | 0042 ' | 0123 ' | 0073 ' |
| 97 | 0645 ' | 1656 ' | 1648 ' | 1647 ' |
| 98 | 0175 ' | 0241 ' | 1654 ' | 1651 ' |
| 99 | 0337 ' | 0324 ' | 0329 ' | 0405 ' |
| 100' | 1658 ' | 0658 ' | 0149 ' | 0149 ' |

| | | |
|---|---|---|
| TEST CONDUCTED FOR: NASA, OFFICE OF ADVANCED RESEARCH AND TECHNOLOGY | | DATE: 23 APRIL 1965 |
| TEST: POST - 240 HR. MEAS. | SAMPLE NUMBER: NOTED | BAROM. PRESS. IN. HG. |
| PART NAME & NUMBER: DTL NAND/NOR GATE - SL 1519 | TEST MEDIUM: AIR | WET BULB TEMP. 62° F. |
| MANUFACTURER: A | TEST TEMP. 72° C. ☐ F. ☒ | DRY BULB TEMP. 72° F |
| ENGINEER | TECHNICIAN: J. CALLEY | INSPECTOR |
| REF. SPEC. | | DATA SHEET NUMBER |

JOB NUMBER Ao-138-AE PAGE OF TEST REPORT NO. TR1-1188

2011
4/65

GENERAL PRECISION, INC.
LIBRASCOPE GROUP

# ENVIRONMENTAL LABORATORY DATA SHEET

GROUP IV - TEMPERATURE STEP STRESS

PARAMETER: LEAKAGE CURRENT NO. 1 AT 4 VOLTS

| SAMPLE NUMBER | CURRENT - FULL SCALE = 100NA | | | |
|---|---|---|---|---|
| | I1 | I2 | I8 | I9 |
| 101 | 0429 ' | 1636 ' | 0488 ' | 0999 ' |
| 102 | 0303 ' | 1647 ' | 0885 ' | 0310 ' |
| 103 | 0476 ' | 0316 ' | 0447 ' | 0254 ' |
| 104 | 1653 ' | 0238 ' | 0820 ' | 0951 ' |
| 105 | 0635 ' | 0793 ' | 0309 ' | 0253 ' |
| 106 | 1651 ' | 0780 ' | 1033 ' | 1631 ' |
| 107 | 0381 ' | 0111 ' | 0498 ' | 0061 ' |
| 108 | 0587 ' | 0236 ' | 1655 ' | 1650 ' |
| 109 | 0254 ' | 0177 ' | 0145 ' | 0423 ' |
| 110 | 0072 ' | 0138 ' | 0251 ' | 1133 ' |
| 111 | 0244 ' | 0418 ' | 1655 ' | 0356 ' |
| 112 | 0041 ' | 0032 ' | 0530 ' | 0119 ' |
| 113 | 0204 ' | 0323 ' | 0619 ' | 0011 ' |
| 114 | 0134 ' | 0540 ' | 1450 ' | 0310 ' |
| 115' | 0124 ' | 0263 ' | 0355 ' | 0577 ' |

| | | |
|---|---|---|
| TEST CONDUCTED FOR: NASA, OFFICE OF ADVANCED RESEARCH AND TECHNOLOGY | | DATE: 23 APRIL 1965 |
| TEST: POST - 240 HR. MEAS. | SAMPLE NUMBER: NOTED | BAROM. PRESS. IN. HG. |
| PART NAME & NUMBER: DTL NAND/NOR GATE - SL1619 | TEST MEDIUM: AIR | WET BULB TEMP. 62°F |
| MANUFACTURER: A | TEST TEMP. 72° C. ☐ F. ☒ | DRY BULB TEMP. 72°F |
| ENGINEER | TECHNICIAN: J. CALLEY | INSPECTOR |
| REF. SPEC. | | DATA SHEET NUMBER |

JOB NUMBER AO-138-AE PAGE OF TEST REPORT NO. TR1-1188

2011
4/65

GENERAL PRECISION, INC.
LIBRASCOPE GROUP

# ENVIRONMENTAL LABORATORY DATA SHEET

GROUP I - INSTRUMENTATION CONTROL

PARAMETER: LEAKAGE CURRENT NO. 2
CALIBRATION CHECK WITH 10 MEG

CALIBRATION CURRENT - FULL SCALE = 100 NA

| | | | |
|---|---|---|---|
| 1.0 V | 0992 ' | 0997 ' | 0996 ' |
| 0.5 V | 0495 ' | 0495 ' | 0491 ' |

| SAMPLE NUMBER | LEAKAGE CURRENT IN NANOAMPS | | | | |
|---|---|---|---|---|---|
| | I1 | I2 | I3 | I8 | I9 |
| 1 | 324. | 12.5 | 11.9 | 20.3 | 8.9 |
| 2 | 20.1 | 16.0 | 12.8 | 132. | 17.2 |
| 3 | 34.5 | 31.2 | 45.5 | 51.8 | 50.7 |
| 4 | 117. | 11.8 | 172. | 6.4 | 4.5 |
| 5 | 243. | 118. | 50.2 | 97.5 | 95.6 |

| | | | |
|---|---|---|---|
| TEST CONDUCTED FOR: NASA, OFFICE OF ADVANCED RESEARCH AND TECHNOLOGY | | | DATE: 4-23-65 |
| TEST: POST - 240 HR. MEAS. | SAMPLE NUMBER: NOTED | | BAROM. PRESS. IN. HG. |
| PART NAME & NUMBER: DTL NAND/NOR | TEST MEDIUM: AIR | | WET BULB TEMP. 63°F |
| MANUFACTURER: A | TEST TEMP. 73° | C. ☐ F. ☑ | DRY BULB TEMP. 73°F |
| ENGINEER | TECHNICIAN: BGW | INSPECTOR | |
| REF. SPEC. | | DATA SHEET NUMBER | |

JOB NUMBER AA-138-AE PAGE OF TEST REPORT NO. TR1-1188

2011
4/65

GENERAL PRECISION, INC.
LIBRASCOPE GROUP

# ENVIRONMENTAL LABORATORY DATA SHEET

GROUP IV - TEMP STEP STRESS

PARAMETER: LEAKAGE CURRENT NO. 2

| SAMPLE NUMBER | LEAKAGE CURRENT IN NANOAMPS | | | | |
|---|---|---|---|---|---|
| | I1 | I2 | I3 | I8 | I9 |
| 66 | 12.3 | 4.5 | 23.0 | 6.9 | 6.5 |
| 67 | 6.1 | 2.8 | 17.8 | 19.0 | 9.5 |
| 68 | 27.5 | 3.2 | 25.0 | 11.9 | 5.1 |
| 69 | 9.2 | 19.8 | 113. | 45.0 | 3.2 |
| 70 | 29.6 | 7.3 | 3.5 | 10.3 | 8.8 |
| 71 | 8.1 | 14.9 | 3.7 | 6.8 | 21.0 |
| 72 | 62.2 | 122. | 29.0 | 119. | 13.7 |
| 73 | 328. | 39.7 | 19.5 | 29.9 | 29.4 |
| 74 | 19.1 | 232. | 28.8 | 70.5 | 9.6 |
| 75 | 70.5 | 143. | 3.84UA | 11.5 | 34.5 |
| 76 | 4.4 | 226. | 19.9 | 628. | 93.4 |
| 77 | 3.7 | 2.4 | 2.8 | 3.0 | 3.3 |
| 78 | 21.8 | 15.7 | 40.6 | 12.2 | 115. |
| 79 | 31.2 | 31.7 | 45.0 | 42.7 | 27.5 |
| 80 | 7.6 | 7.1 | 61.1 | 50.5 | 27.6 |

| | | |
|---|---|---|
| TEST CONDUCTED FOR: NASA, OFFICE OF ADVANCED RESEARCH AND TECHNOLOGY | | DATE: 4-23-65 |
| TEST: POST - 240HR. MEAS. | SAMPLE NUMBER: NOTED | BAROM. PRESS. IN. HG. |
| PART NAME & NUMBER: DTL NAND/NOR GATE - SL 1519 | TEST MEDIUM: AIR | WET BULB TEMP.: 63°F |
| MANUFACTURER: A | TEST TEMP.: 73° C. ☐ F. ☑ | DRY BULB TEMP.: 73°F |
| ENGINEER | TECHNICIAN: BOGAN | INSPECTOR |
| REF. SPEC. | | DATA SHEET NUMBER |

JOB NUMBER AD-138-AE PAGE OF TEST REPORT NO. TR1-1188

2011
4/65

GENERAL PRECISION, INC.
LIBRASCOPE GROUP

# ENVIRONMENTAL LABORATORY DATA SHEET

GROUP IV - TEMP STEP STRESS

PARAMETER: LEAKAGE CURRENT NO. 2

| SAMPLE NUMBER | LEAKAGE CURRENT IN NANOAMPS | | | | |
|---|---|---|---|---|---|
| | I1 | I2 | I3 | I8 | I9 |
| 81 | 73.2 | 73.0 | 32.1 | 24.4 | 58.5 |
| 82 | 22.7 | 18.5 | 19.3 | 32.2 | 14.2 |
| 83 | 6.4 | 39.2 | 11.9 | 14.7 | 23.1 |
| 84 | 2.9 | 10.4 | 1.6 | 7.4 | 2.2 |
| 85 | 94.4 | 70.5 | 98.2 | 35.5 | 37.5 |
| 86 | 12.7 | 67.4 | 20.5 | 10.2 | 377. |
| 87 | 32.2 | 111. | 9.5 | 97.4 | 24.3 |
| 88 | 11.3 | 8.1 | 3.4 | 5.9 | 8.3 |
| 89 | 69.5 | 44.3 | 42.2 | 33.5 | 19.2 |
| 90 | 28.7 | 187. | 42.2 | 75.6 | 118. |
| 91 | 43.0 | 63.2 | 90.6 | 21.4 | 13.2 |
| 92 | 24.5 | 4.6 | 3.5 | 24.6 | 51.0 |
| 93 | 8.5 | 10.3 | 5.6 | 18.6 | 14.8 |
| 94 | 11.6 | 6.7 | 5.0 | 5.7 | 10.8 |
| 95 | 26.3 | 45.9 | 38.4 | 13.9 | 8.5 |
| 96 | 5.3 | 3.7 | 6.2 | 6.3 | 4.1 |
| 97 | 38.7 | 345. | 53.9 | 74.9 | 97.4 |
| 98 | 12.2 | 17.2 | 29.1 | 145. | 74.5 |
| 99 | 17.6 | 25.3 | 43.1 | 15.7 | 16.6 |
| 100 | 674. | 44.6 | 7.1 | 6.9 | 7.9 |

| | | | |
|---|---|---|---|
| TEST CONDUCTED FOR: NASA OFFICE OF ADVANCED RESEARCH AND TECHNOLOGY | | | DATE: 4-23-65 |
| TEST: POST - 240 HR. MEAS | SAMPLE NUMBER: NOTED | | BAROM. PRESS. IN. HG. |
| PART NAME & NUMBER: DTL NAND/NOR GATE - SL1519 | TEST MEDIUM: AIR | | WET BULB TEMP.: 63°F |
| MANUFACTURER: A | TEST TEMP.: 73° C. ☐ F. ☑ | | DRY BULB TEMP.: 73°F |
| ENGINEER | TECHNICIAN: BOGAN | INSPECTOR | |
| REF. SPEC. | | DATA SHEET NUMBER | |

JOB NUMBER A0-138-AE PAGE OF TEST REPORT NO. TR1-1188

2011
4/65

GENERAL PRECISION, INC.
LIBRASCOPE GROUP

# ENVIRONMENTAL LABORATORY DATA SHEET

GROUP IV - TEMP STEP STRESS

PARAMETER: LEAKAGE CURRENT NO. 2

| SAMPLE NUMBER | LEAKAGE CURRENT IN NANOAMPS | | | | |
|---|---|---|---|---|---|
| | I1 | I2 | I3 | I8 | I9 |
| 101 | 35.5 | 138. | 17.6 | 25.7 | 54.5 |
| 102 | 21.5 | 158. | 14.6 | 18.0 | 15.7 |
| 103 | 31.3 | 24.4 | 50.5 | 15.3 | 10.8 |
| 104 | 198. | 15.9 | 24.1 | 33.5 | 38.5 |
| 105 | 47.5 | 60.6 | 23.5 | 12.3 | 10.0 |
| 106 | 163. | 70.6 | 21.9 | 40.0 | 56.5 |
| 107 | 28.9 | 8.5 | 7.0 | 21.6 | 3.1 |
| 108 | 31.5 | 16.7 | 21.8 | 174. | 68.8 |
| 109 | 18.9 | 13.3 | 57.0 | 6.4 | 20.4 |
| 110 | 6.6 | 10.5 | 39.5 | 11.3 | 64.2 |
| 111 | 15.0 | 25.3 | 42.6 | 239. | 15.6 |
| 112 | 3.8 | 2.9 | 2.8 | 22.3 | 5.6 |
| 113 | 14.5 | 24.7 | 12.5 | 2.6 | .12 |
| 114 | 9.6 | 38.6 | 25.0 | 68.6 | 13.5 |
| 115 | 7.7 | 19.2 | 15.9 | 17.3 | 25.4 |

| | | | |
|---|---|---|---|
| TEST CONDUCTED FOR: NASA, OFFICE OF ADVANCED RESEARCH AND TECHNOLOGY | | | DATE: 4-23-65 |
| TEST: POST - 240 HR. MEAS. | SAMPLE NUMBER: NOTED | | BAROM. PRESS. IN. HG. |
| PART NAME & NUMBER: DTL NAND/NOR GATE - SL1519 | TEST MEDIUM: AIR | | WET BULB TEMP. 63°F |
| MANUFACTURER: A | TEST TEMP. 73° | C. ☐ F. ☑ | DRY BULB TEMP. 73°F |
| ENGINEER | TECHNICIAN: BOGAN | INSPECTOR | |
| REF. SPEC. | | DATA SHEET NUMBER | |

JOB NUMBER AO-138-AE PAGE OF TEST REPORT NO. TR1-1188

2011
4/65

GENERAL PRECISION, INC.
LIBRASCOPE GROUP

# ENVIRONMENTAL LABORATORY DATA SHEET

TEST CONDITIONS: RESISTANCE @ 1 MILLIAMP IN KILOHMS
IF RETEST CHECK ☐

| (SAMPLE) | $R_1+R_2$ | $R_4$ | $R_1+R_2$ | $R_4$ | SAMPLE | $R_1+R_2$ | $R_4$ | $R_1+R_2$ | $R_4$ |
|---|---|---|---|---|---|---|---|---|---|
| 66 | 3.62 | 2.72 | 2.90 | 2.72 | 91 | 3.58 | 2.68 | 2.82 | 2.67 |
| 67 | 3.62 | 2.73 | 2.89 | 2.71 | 92 | 3.84 | 2.87 | 3.11 | 2.85 |
| 68 | 3.62 | 2.76 | 2.91 | 2.74 | 93 | 3.46 | 2.63 | 3.50 | 2.62 |
| 69 | 3.62 | 2.77 | 2.92 | 2.76 | 94 | 3.62 | 2.77 | 2.89 | 2.76 |
| 70 | 3.70 | 2.82 | 2.99 | 2.81 | 95 | 3.58 | 2.71 | 2.87 | 2.70 |
| 71 | 3.57 | 2.70 | 2.85 | 2.69 | 96 | 3.54 | 2.65 | 2.83 | 2.66 |
| 72 | 3.66 | 2.79 | 2.95 | 2.80 | 97 | 3.64 | 2.79 | 2.94 | 2.80 |
| 73 | 3.63 | 2.74 | 2.92 | 2.74 | 98 | 3.48 | 2.64 | 2.74 | 2.61 |
| 74 | 3.70 | 2.87 | 3.00 | 2.87 | 99 | 3.74 | 2.85 | 3.01 | 2.85 |
| 75 | 3.39 | 2.81 | 2.98 | 2.81 | 100 | 3.62 | 2.77 | 2.91 | 2.77 |
| 76 | 3.61 | 2.75 | 2.91 | 2.74 | 101 | 3.64 | 2.74 | 2.92 | 2.75 |
| 77 | 3.52 | 2.65 | 2.81 | 2.64 | 102 | 3.71 | 2.86 | 2.99 | 2.85 |
| 78 | 3.44 | 2.63 | 2.72 | 2.64 | 103 | 3.66 | 2.81 | 2.95 | 2.81 |
| 79 | 2.63 | 2.78 | 2.93 | 2.79 | 104 | 3.61 | 2.74 | 2.93 | 2.73 |
| 80 | 3.70 | 2.86 | 2.98 | 2.84 | 105 | 3.55 | 2.68 | 2.81 | 2.67 |
| 81 | 3.52 | 2.66 | 2.75 | 2.64 | 106 | 3.68 | 2.81 | 2.99 | 2.82 |
| 82 | 3.67 | 2.78 | 2.95 | 2.76 | 107 | 3.59 | 2.74 | 2.89 | 2.73 |
| 83 | 3.64 | 2.75 | 2.91 | 2.74 | 108 | 3.73 | 2.85 | 3.01 | 2.84 |
| 84 | 3.57 | 2.69 | 2.86 | 2.68 | 109 | 3.72 | 2.87 | 3.01 | 2.86 |
| 85 | 3.58 | 2.70 | 2.86 | 2.70 | 110 | 3.64 | 2.76 | 2.92 | 2.74 |
| 86 | 3.46 | 2.62 | 2.94 | 2.62 | 111 | 3.74 | 2.85 | 3.00 | 2.84 |
| 87 | 3.70 | 2.83 | 2.98 | 2.81 | 112 | 3.75 | 2.89 | 3.04 | 2.88 |
| 88 | 3.63 | 2.76 | 2.92 | 2.75 | 113 | 3.70 | 2.96 | 2.96 | 2.76 |
| 89 | 3.71 | 2.82 | 2.98 | 2.82 | 114 | 3.66 | 2.78 | 2.94 | 2.77 |
| 90 | 3.61 | 2.70 | 2.85 | 2.69 | 115 | 3.78 | 2.80 | 2.98 | 2.82 |

| | | |
|---|---|---|
| TEST CONDUCTED FOR: NASA OFFICE OF ADVANCED RESEARCH AND TECHNOLOGY | | DATE: 21 APRIL 1965 |
| TEST: DC RESISTANCE – POST 240 HR. HIGH TEMP. | SAMPLE NUMBER: GROUP IV | BAROM. PRESS. — IN. HG. |
| PART NAME & NUMBER: DTL NAND/NOR GATE — SL1519 | TEST MEDIUM: AIR | WET BULB TEMP. 62°F |
| MANUFACTURER: A | TEST TEMP. 75° C. ☐ F. ☒ | DRY BULB TEMP. 75°F |
| ENGINEER | TECHNICIAN: S. Harper | INSPECTOR |
| REF. SPEC. | | DATA SHEET NUMBER |

JOB NUMBER AO-138-AE PAGE OF TEST REPORT NO. TR1-1188

601-2
1/64

GENERAL PRECISION, INC.
LIBRASCOPE GROUP

# ENVIRONMENTAL LABORATORY DATA SHEET

GROUP I - INSTRUMENTATION CONTROL

CALIBRATION RESISTOR — CURRENT - FULL SCALE = 10 MA

| | | | |
|---|---|---|---|
| 2000 OHMS | 2000 | 2006 | 2004 |
| 1000 OHMS | 4012 | 4007 | 4005 |

PARAMETER: DIODE FORWARD CURRENT WITH V10 = 4 VOLTS

CURRENT FULL SCALE = 10 MA

| SAMPLE NUMBER | If1 | If2 | If8 | If9 |
|---|---|---|---|---|
| 1 | 1348 | 1354 | 1422 | 1431 |
| 2 | 1503 | 1497 | 1510 | 1513 |
| 3 | 1419 | 1422 | 1419 | 1423 |
| 4 | 1583 | 1582 | 1603 | 1593 |
| 5' | 1445 | 1456 | 1473 | 1458 |

| | | | |
|---|---|---|---|
| TEST CONDUCTED FOR: NASA OFFICE OF ADVANCED RESEARCH AND TECHNOLOGY | | | DATE: 4-20-65 |
| TEST: POST-240 HR MEAS. | SAMPLE NUMBER: NOTED | | BAROM. PRESS. IN. HG |
| PART NAME & NUMBER: DTL NAND/NOR GATE-SL1519 | TEST MEDIUM: AIR | | WET BULB TEMP.: 62°F |
| MANUFACTURER: A | TEST TEMP.: 74° | C. ☐ F. ☒ | DRY BULB TEMP.: 74°F |
| ENGINEER | TECHNICIAN: BOGAN | INSPECTOR | |
| REF. SPEC. | | DATA SHEET NUMBER | |

JOB NUMBER A0-138-AE PAGE OF TEST REPORT NO. TR1-1188

601-2
1/64

GENERAL PRECISION, INC.
LIBRASCOPE GROUP

# ENVIRONMENTAL LABORATORY DATA SHEET

GROUP IV - TEMP STEP STRESS GROUP

PARAMETER: DIODE FORWARD CURRENT WITH V10 = 4 VOLTS

CURRENT - FULL SCALE = 10 MA

| SAMPLE NUMBER | If1 | If2 | If8 | If9 |
|---|---|---|---|---|
| 66 | 1528 | 1525 | 1529 | 1527 |
| 67 | 1536 | 1529 | 1545 | 1550 |
| 68 | 1484 | 1487 | 1482 | 1491 |
| 69 | 1510 | 1517 | 1521 | 1514 |
| 70 | 1393 | 1380 | 1371 | 1377 |
| 71 | 1607 | 1606 | 1604 | 1610 |
| 72 | 1456 | 1453 | 1448 | 1445 |
| 73 | 1547 | 1545 | 1528 | 1534 |
| 74 | 1275 | 1267 | 1280 | 1283 |
| 75 | 1437 | 1441 | 1433 | 1436 |
| 76 | 1564 | 1555 | 1547 | 1553 |
| 77 | 1673 | 1669 | 1682 | 1684 |
| 78 | 1557 | 1564 | 1536 | 1540 |
| 79 | 1493 | 1492 | 1502 | 1496 |
| 80' | 1390 | 1377 | 1397 | 1394 |

| | | |
|---|---|---|
| TEST CONDUCTED FOR: NASA OFFICE OF ADVANCED RESEARCH AND TECHNOLOGY | | DATE: 4-20-65 |
| TEST: POST-240 HR. MEAS. | SAMPLE NUMBER: NOTED | BAROM. PRESS. IN. HG. |
| PART NAME & NUMBER: DTL NAND/NOR GATE SL1519 | TEST MEDIUM: AIR | WET BULB TEMP. 62°F |
| MANUFACTURER: A | TEST TEMP. 74° C. ☐ F. ☑ | DRY BULB TEMP. 74°F |
| ENGINEER | TECHNICIAN: BOGAD | INSPECTOR |
| REF. SPEC. | | DATA SHEET NUMBER |

JOB NUMBER AO-138-AE PAGE OF TEST REPORT NO. TR1-1188

601-2
1/64

GENERAL PRECISION, INC.
LIBRASCOPE GROUP

# ENVIRONMENTAL LABORATORY DATA SHEET

GROUP IV- TEMP STEP STRESS GROUP

PARAMETER: DIODE FORWARD CURRENT WITH V10 = 4 VOLTS

CURRENT - FULL SCALE = 10 MA

| SAMPLE NUMBER | If1 | If2 | If8 | If9 |
|---|---|---|---|---|
| 81 | 1611 | 1618 | 1632 | 1643 |
| 82 | 1506 | 1514 | 1507 | 1500 |
| 83 | 1535 | 1542 | 1552 | 1554 |
| 84 | 1677 | 1682 | 1681 | 1674 |
| 85 | 1641 | 1652 | 1637 | 1643 |
| 86 | 1625 | 1631 | 1555 | 1555 |
| 87 | 1422 | 1424 | 1410 | 1417 |
| 88 | 1523 | 1520 | 1544 | 1542 |
| 89 | 1394 | 1403 | 1404 | 1397 |
| 90 | 1508 | 1516 | 1551 | 1546 |
| 91 | 1551 | 1555 | 1546 | 1548 |
| 92 | 1223 | 1226 | 1239 | 1246 |
| 93 | 1404 | 1403 | 0757 | 0761 |
| 94 | 1486 | 1477 | 1534 | 1541 |
| 95 | 1578 | 1572 | 1574 | 1573 |
| 96 | 1679 | 1674 | 1670 | 1672 |
| 97 | 1442 | 1447 | 1445 | 1448 |
| 98 | 1737 | 1744 | 1724 | 1724 |
| 99 | 1326 | 1337 | 1337 | 1331 |
| 100 | 1482 | 1485 | 1476 | 1480 |

| | | |
|---|---|---|
| TEST CONDUCTED FOR: NASA, OFFICE OF ADVANCED RESEARCH AND TECHNOLOGY | | DATE: 4-20-65 |
| TEST: POST - 240 HR. MEAS. | SAMPLE NUMBER: NOTED | BAROM. PRESS. IN. HG. |
| PART NAME & NUMBER: DTL NAND/NOR GATE SL1519 | TEST MEDIUM: AIR | WET BULB TEMP. 62°F |
| MANUFACTURER: A | TEST TEMP. 74° C. ☐ F. ☑ | DRY BULB TEMP. 74°F |
| ENGINEER | TECHNICIAN: BOGAN | INSPECTOR |
| REF. SPEC. | | DATA SHEET NUMBER |

JOB NUMBER A0-138-AE PAGE OF TEST REPORT NO. TR1-1188

601-2
1/64

GENERAL PRECISION, INC.
LIBRASCOPE GROUP

# ENVIRONMENTAL LABORATORY DATA SHEET

GROUP IV - TEMP STEP STRESS GROUP

PARAMETER: DIODE FORWARD CURRENT WITH V10 = 4 VOLTS

| SAMPLE NUMBER | If1 | CURRENT - FULL SCALE = 10 MA If2 | IF8 | If9 |
|---|---|---|---|---|
| 101 | 1539 | 1532 | 1525 | 1522 |
| 102 | 1307 | 1298 | 1314 | 1316 |
| 103 | 1449 | 1453 | 1450 | 1452 |
| 104 | 1571 | 1574 | 1541 | 1543 |
| 105 | 1660 | 1667 | 1654 | 1658 |
| 106 | 1422 | 1427 | 1414 | 1410 |
| 107 | 1573 | 1572 | 1556 | 1558 |
| 108 | 1378 | 1387 | 1380 | 1374 |
| 109 | 1304 | 1304 | 1316 | 1314 |
| 110 | 1529 | 1532 | 1507 | 1509 |
| 111 | 1353 | 1362 | 1368 | 1373 |
| 112 | 1244 | 1240 | 1234 | 1242 |
| 113 | 1452 | 1456 | 1457 | open |
| 114 | 1510 | 1517 | 1519 | 1520 |
| 115 | 1233 | 1237 | 1407 | 1413 |

CALIBRATION CHECK

| CALIBRATION RESISTOR | CURRENT - FULL SCALE = 10 MA | | |
|---|---|---|---|
| 2000 OHMS | 2010 | 2009 | 2014 |
| 1000 OHMS' | 4016 | 4004 | 4010 |

| | | |
|---|---|---|
| TEST CONDUCTED FOR: NASA, OFFICE OF ADVANCED RESEARCH AND TECHNOLOGY | | DATE: 4-20-65 |
| TEST: POST - 240 HR. MEAS. | SAMPLE NUMBER: NOTED | BAROM. PRESS. IN. HG. |
| PART NAME & NUMBER: DTL NAND/NOR GATE - SL1519 | TEST MEDIUM: AIR | WET BULB TEMP. 62°F |
| MANUFACTURER: A | TEST TEMP. 74° C. ☐ F. ☑ | DRY BULB TEMP. 74°F |
| ENGINEER | TECHNICIAN: BOLAW | INSPECTOR |
| REF. SPEC. | | DATA SHEET NUMBER |

JOB NUMBER A0-138-AE PAGE OF TEST REPORT NO. TR1-1188

601-2
1/64

GENERAL PRECISION, INC.
LIBRASCOPE GROUP

# ENVIRONMENTAL LABORATORY DATA SHEET

GROUP I - INSTRUMENTATION CONTROL

PARAMETER: OUTPUT SATURATION VOLTAGE WITH V10 = 4 VOLTS - I4 = 10 MA (SECTION I)
V10 = 4 VOLTS - I6 = 10 MA (SECTION II)

CALIBRATION CHECK AT 10 MA AND 1 MA

| CALIBRATION RESISTOR | VOLTAGE - FULL SCALE = 10 VOLTS | | |
|---|---|---|---|
| 500 OHMS | 0498 ' | 0498 ' | 0498 ' |
| 50 OHMS | 0498 ' | 0499 ' | 0498 ' |

| SAMPLE NUMBER | VOLTAGE - FULL SCALE = 10 VOLTS SECTION I V4 | SECTION II V6 |
|---|---|---|
| 1 | 0292 ' | 0267 ' |
| 2 | 0243 ' | 0243 ' |
| 3 | 0283 ' | 0285 ' |
| 4 | 0225 ' | 0229 ' |
| 5' | 0269 ' | 0261 ' |

| | | |
|---|---|---|
| TEST CONDUCTED FOR: NASA, OFFICE OF ADVANCED RESEARCH AND TECHNOLOGY | | DATE: 4-22-65 |
| TEST: POST - 240 HR. MEAS. | SAMPLE NUMBER: NOTED | BAROM. PRESS. IN. HG. |
| PART NAME & NUMBER: DTL NAND/NOR GATE - SL 1519 | TEST MEDIUM: AIR | WET BULB TEMP. 62°F |
| MANUFACTURER: A | TEST TEMP. 73° C. ☐ F. ☑ | DRY BULB TEMP. 73°F |
| ENGINEER | TECHNICIAN: BOGAN | INSPECTOR |
| REF. SPEC. | | DATA SHEET NUMBER |

JOB NUMBER AO-138-AE PAGE OF TEST REPORT NO. TR1-1188

2011
4/65

GENERAL PRECISION, INC.
LIBRASCOPE GROUP

# ENVIRONMENTAL LABORATORY DATA SHEET

GROUP IV - TEMP STEP STRESS GROUP

PARAMETER: OUTPUT SATURATION VOLTAGE WITH V10 = 4 VOLTS - I4 = 10 MA (SECTION I)
V10 = 4 VOLTS - I6 = 10 MA (SECTION II)

VOLTAGE - FULL SCALE = 10 VOLTS

| SAMPLE NUMBER | SECTION I V4 | SECTION II V6 |
|---|---|---|
| 66 | 0229 ' | 0228 ' |
| 67 | 0283 ' | 0287 ' |
| 68 | 0227 ' | 0225 ' |
| 69 | 0249 ' | 0248 ' |
| 70 | 0283 ' | 0274 ' |
| 71 | 0235 ' | 0232 ' |
| 72 | 0275 ' | 0281 ' |
| 73 | 0266 ' | 0267 ' |
| 74 | 0309 ' | 0304 ' |
| 75 | 0302 ' | 0297 ' |
| 76 | 0257 ' | 0257 ' |
| 77 | 0226 ' | 0231 ' |
| 78 | 0285 ' | 0264 ' |
| 79 | 0286 ' | 0289 ' |
| 80' | 0326 ' | 0320 ' |

| | | | |
|---|---|---|---|
| TEST CONDUCTED FOR: NASA OFFICE OF ADVANCED RESEARCH AND TECHNOLOGY | | | DATE: 4-22-65 |
| TEST: POST - 240 HR. MEAS. | SAMPLE NUMBER: NOTED | | BAROM. PRESS. IN. HG. |
| PART NAME & NUMBER: DTL NAND/NOR GATE - SL1519 | TEST MEDIUM: AIR | | WET BULB TEMP. 62°F |
| MANUFACTURER: A | TEST TEMP. 73° | C. ☐ F. ☒ | DRY BULB TEMP. 73°F |
| ENGINEER | TECHNICIAN: BOGAN | INSPECTOR | |
| REF. SPEC. | | DATA SHEET NUMBER | |

JOB NUMBER A0-138-AE PAGE OF TEST REPORT NO. TR1-1188

2011
4/65

GENERAL PRECISION, INC.
LIBRASCOPE GROUP

# ENVIRONMENTAL LABORATORY DATA SHEET

GROUP IV - TEMP STEP STRESS GROUP

PARAMETER: OUTPUT SATURATION VOLTAGE WITH V10 = 4 VOLTS - I4 = 10 MA (SECTION I)
V10 = 4 VOLTS - I6 = 10 MA (SECTION II)

VOLTAGE - FULL SCALE = 10 VOLTS

| SAMPLE NUMBER | SECTION I V4 | SECTION II V6 |
|---|---|---|
| 81 | 0239 ' | 0217 ' |
| 82 | 0279 ' | 0277 ' |
| 83 | 0293 ' | 0282 ' |
| 84 | 0277 ' | 0280 ' |
| 85 | 0269 ' | 0276 ' |
| 86 | 0259 ' | 0275 ' |
| 87 | 0303 ' | 0298 ' |
| 88 | 0312 ' | 0306 ' |
| 89 | 0275 ' | 0286 ' |
| 90 | 0235 ' | 0226 ' |
| 91 | 0253 ' | 0231 ' |
| 92 | 0297 ' | 0288 ' |
| 93 | 0288 ' | 0279 ' |
| 94 | 0254 ' | 0257 ' |
| 95 | 0299 ' | 0298 ' |
| 96 | 0225 ' | 0235 ' |
| 97 | 0294 ' | 0298 ' |
| 98 | 0248 ' | 0245 ' |
| 99 | 0287 ' | 0285 ' |
| 100' | 0254 ' | 0254 ' |

| | | |
|---|---|---|
| TEST CONDUCTED FOR: NASA, OFFICE OF ADVANCED RESEARCH AND TECHNOLOGY | | DATE: 4-22-65 |
| TEST: POST - 240 HR. MEAS. | SAMPLE NUMBER: NOTED | BAROM. PRESS. IN. HG. |
| PART NAME & NUMBER: DTL NAND/NOR GATE - SL1519 | TEST MEDIUM: AIR | WET BULB TEMP. 62°F |
| MANUFACTURER: A | TEST TEMP. 73° C. ☐ F. ☑ | DRY BULB TEMP. 73°F |
| ENGINEER | TECHNICIAN: BOLAN | INSPECTOR |
| REF. SPEC. | | DATA SHEET NUMBER |

JOB NUMBER AO-138-AE PAGE OF TEST REPORT NO. TR1-1188

2011
4/65

GENERAL PRECISION, INC.
LIBRASCOPE GROUP

# ENVIRONMENTAL LABORATORY DATA SHEET

GROUP IV - TEMP STEP STRESS GROUP

PARAMETER: OUTPUT SATURATION VOLTAGE WITH V10 = 4 VOLTS - I4 = 10 MA (SECTION I)
V10 = 4 VOLTS - I6 = 10 MA (SECTION II)

| SAMPLE NUMBER | VOLTAGE- FULL SCALE = 10 VOLTS SECTION I V4 | SECTION II V6 |
|---|---|---|
| 101 | 0280 ' | 0280 ' |
| 102 | 0309 ' | 0304 ' |
| 103 | 0307 ' | 0306 ' |
| 104 | 0317 ' | 0311 ' |
| 105 | 0270 ' | 0273 ' |
| 106 | 0277 ' | 0274 ' |
| 107 | 0263 ' | 0268 ' |
| 108 | 0288 ' | 0299 ' |
| 109 | 0311 ' | 0307 ' |
| 110 | 0285 ' | 0286 ' |
| 111 | 0284 ' | 0283 ' |
| 112 | 0318 ' | 0310 ' |
| 113 | 0262 ' | 0266 ' |
| 114 | 0283 ' | 0279 ' |
| 115 | 0313 ' | 0337 ' |

CALIBRATION CHECK AT 10 MA AND 1 MA

| CALIBRATION RESISTOR | VOLTAGE - FULL SCALE = 10 VOLTS | | |
|---|---|---|---|
| 500 OHMS | 0498 ' | 0499 ' | 0499 ' |
| 50 OHMS' | 0499 ' | 0498 ' | 0499 ' |

| | | |
|---|---|---|
| TEST CONDUCTED FOR: NASA, OFFICE OF ADVANCED RESEARCH AND TECHNOLOGY | | DATE: 4-22-65 |
| TEST: POST - 240 HR. MEAS. | SAMPLE NUMBER: NOTED | BAROM. PRESS. IN. HG. |
| PART NAME & NUMBER: DTL NAND/NOR GATE - SL1519 | TEST MEDIUM: AIR | WET BULB TEMP.: 62°F |
| MANUFACTURER: A | TEST TEMP.: 73° C. ☐ F. ☑ | DRY BULB TEMP.: 73°F |
| ENGINEER | TECHNICIAN: BOLAN | INSPECTOR |
| REF. SPEC. | | DATA SHEET NUMBER |

JOB NUMBER Ao-138-AE PAGE OF TEST REPORT NO. TR1-1188

2011
4/65

GENERAL PRECISION, INC.
LIBRASCOPE GROUP

# ENVIRONMENTAL LABORATORY DATA SHEET

GROUP I - INSTRUMENTATION CONTROL GROUP

PARAMETER: DC CURRENT GAIN VCE = 2.5 VOLTS
IC = 1.0 MA

BASE CURRENT - FULL SCALE = 1000 UA

| SAMPLE NUMBER | IB |
|---|---|
| 1 | 183 |
| 2 | 183 |
| 3 | 148 |
| 4 | 134 |
| 5 | 140 |

| | | |
|---|---|---|
| TEST CONDUCTED FOR: NASA, OFFICE OF ADVANCED RESEARCH AND TECHNOLOGY | | DATE: 4-22-65 |
| TEST: POST - 240 HR MEAS. | SAMPLE NUMBER: NOTED | BAROM. PRESS. IN. HG. |
| PART NAME & NUMBER: DTL NAND/NOR GATE - SL1519 | TEST MEDIUM: AIR | WET BULB TEMP.: 62°F |
| MANUFACTURER: A | TEST TEMP.: 73° C. ☐ F. ☑ | DRY BULB TEMP.: 73°F |
| ENGINEER | TECHNICIAN: BOGAN | INSPECTOR |
| REF. SPEC. | | DATA SHEET NUMBER |

JOB NUMBER AO-138-AE PAGE OF TEST REPORT NO. TR1-1188

2011
4/65

GENERAL PRECISION, INC.
LIBRASCOPE GROUP

# ENVIRONMENTAL LABORATORY DATA SHEET

GROUP IV - TEMP STEP STRESS GROUP

PARAMETER: DC CURRENT GAIN VCE = 2.5 VOLTS
IC = 1.0 MA

BASE CURRENT - FULL SCALE = 1000 UA

| SAMPLE NUMBER | IB |
|---|---|
| 66 | 134 |
| 67 | 157 |
| 68 | 124 |
| 69 | 130 |
| 70 | 138 |
| 71 | 129 |
| 72 | 147 |
| 73 | 159 |
| 74 | 124 |
| 75 | 140 |
| 76 | 132 |
| 77 | 137 |
| 78 | 181 |
| 79 | 143 |
| 80 | 140 |

| | | |
|---|---|---|
| TEST CONDUCTED FOR: NASA, OFFICE OF ADVANCED RESEARCH AND TECHNOLOGY | | DATE: 4-22-65 |
| TEST: POST - 240 HR. MEAS. | SAMPLE NUMBER: NOTED | BAROM. PRESS. IN. HG. |
| PART NAME & NUMBER: DTL NAND/NOR GATE - SL1519 | TEST MEDIUM: AIR | WET BULB TEMP.: 62°F |
| MANUFACTURER: A | TEST TEMP.: 73° C. ☐ F. ☑ | DRY BULB TEMP.: 73°F |
| ENGINEER | TECHNICIAN: BOGAN | INSPECTOR |
| REF. SPEC. | | DATA SHEET NUMBER |

JOB NUMBER AO-138-AE PAGE OF TEST REPORT NO. TR1-1188

2011
4/65

GENERAL PRECISION, INC.
LIBRASCOPE GROUP

# ENVIRONMENTAL LABORATORY DATA SHEET

GROUP IV - TEMP STEP STRESS GROUP

PARAMETER: DC CURRENT GAIN VCE = 2.5 VOLTS
IC = 1.0 MA

BASE CURRENT - FULL SCALE = 1000 UA

| SAMPLE NUMBER | IB |
|---|---|
| 81 | 177 |
| 82 | 158 |
| 83 | 157 |
| 84 | 146 |
| 85 | 169 |
| 86 | 171 |
| 87 | 149 |
| 88 | 139 |
| 89 | 150 |
| 90 | 173 |
| 91 | 175 |
| 92 | 223 |
| 93 | no reading |
| 94 | 127 |
| 95 | 156 |
| 96 | 166 |
| 97 | 138 |
| 98 | 168 |
| 99 | 149 |
| 100 | 125 |

| | | | |
|---|---|---|---|
| TEST CONDUCTED FOR: NASA OFFICE OF ADVANCED RESEARCH AND TECHNOLOGY | | | DATE: 4-22-65 |
| TEST: POST - 240 HR. MEAS. | SAMPLE NUMBER: NOTED | | BAROM. PRESS. IN. HG. |
| PART NAME & NUMBER: DTL NAND/NOR GATE - SL1519 | TEST MEDIUM: AIR | | WET BULB TEMP. 62°F |
| MANUFACTURER: A | TEST TEMP. 73° | C. ☐ F. ☑ | DRY BULB TEMP. 73°F |
| ENGINEER | TECHNICIAN: BOGAN | INSPECTOR | |
| REF. SPEC. | | DATA SHEET NUMBER | |

JOB NUMBER A0-138-AE PAGE OF TEST REPORT NO. TR1-1188

2011
4/65

GENERAL PRECISION, INC.
LIBRASCOPE GROUP

# ENVIRONMENTAL LABORATORY DATA SHEET

GROUP IV - TEMP STEP STRESS GROUP

PARAMETER: DC CURRENT GAIN VCE = 2.5 VOLTS
IC = 1.0 MA

BASE CURRENT - FULL SCALE = 1000 UA

| SAMPLE NUMBER | IB |
|---|---|
| 101 | 155 |
| 102 | 131 |
| 103 | 144 |
| 104 | 149 |
| 105 | 150 |
| 106 | 143 |
| 107 | 132 |
| 108 | 151 |
| 109 | 131 |
| 110 | 159 |
| 111 | 152 |
| 112 | 122 |
| 113 | 165 |
| 114 | 155 |
| 115 | 231 |

| | | |
|---|---|---|
| TEST CONDUCTED FOR: NASA OFFICE OF ADVANCED RESEARCH AND TECHNOLOGY | | DATE: 4-22-65 |
| TEST: POST - 240 HR. MEAS. | SAMPLE NUMBER: NOTED | BAROM. PRESS. IN. HG. |
| PART NAME & NUMBER: DTL NAND/NOR GATE - SL1519 | TEST MEDIUM: AIR | WET BULB TEMP. 62°F |
| MANUFACTURER: A | TEST TEMP. 73° C. ☐ F. ☑ | DRY BULB TEMP. 73°F |
| ENGINEER | TECHNICIAN: BOLAW | INSPECTOR |
| REF. SPEC. | | DATA SHEET NUMBER |

JOB NUMBER AO-138-AE PAGE OF TEST REPORT NO. TR1-1188

2011
4/65

GENERAL PRECISION, INC.
LIBRASCOPE GROUP

# ENVIRONMENTAL LABORATORY DATA SHEET

GROUP I - INSTRUMENTATION CONTROL

PARAMETER: BREAKDOWN VOLTAGE AT 1UA

CALIBRATION CHECK - BREAKDOWN VOLTAGE AT 1UA

| CALIBRATION RESISTOR | VOLTAGE - FULL SCALE = 100 VOLTS | | |
|---|---|---|---|
| 20 MEG | 1998 2' | 1999 2' | 1999 2' |
| 10 MEG | 0996 2' | 0996 2' | 0996 2' |
| 5 MEG | 0495 2' | 0495 2' | 0496 2' |

| SAMPLE NUMBER | VOLTAGE - FULL SCALE = 10 VOLTS | | | |
|---|---|---|---|---|
| | BV1 | BV2 | BV8 | BV9 |
| 1 | 4721 2' | 6006 2' | 5160 2' | 5402 1' |
| 2 | 5997 1' | 5983 1' | 5055 1' | 5455 1' |
| 3 | 5703 1' | 6131 1' | 5490 1' | 5299 1' |
| 4 | 6035 1' | 6179 1' | 5402 1' | 5756 1' |
| 5' | 5139 1' | 5501 1' | 5199 1' | 5208 1' |

| | | |
|---|---|---|
| TEST CONDUCTED FOR: NASA, OFFICE OF ADVANCED RESEARCH AND TECHNOLOGY | | DATE: 4-30-65 |
| TEST: POST-360HR. MEAS - STEP 1 | SAMPLE NUMBER: NOTED | BAROM. PRESS. IN. HG. |
| PART NAME & NUMBER: DTL NAND/NOR GATE - SL 1519 | TEST MEDIUM: AIR | WET BULB TEMP. 64°F |
| MANUFACTURER: A | TEST TEMP. 73° C. ☐ F. ☒ | DRY BULB TEMP. 73°F |
| ENGINEER | TECHNICIAN: J. CALLEY | INSPECTOR |
| REF. SPEC. | | DATA SHEET NUMBER |

JOB NUMBER Ao-138-AE PAGE OF TEST REPORT NO. TR1-1188

2011
4/65

GENERAL PRECISION, INC.
LIBRASCOPE GROUP

# ENVIRONMENTAL LABORATORY DATA SHEET

GROUP III - TEMP CYCLE STEP STRESS GROUP

PARAMETER: BREAKDOWN VOLTAGE AT 1UA

| SAMPLE NUMBER | BV1 | BV2 | BV8 | BV9 |
|---|---|---|---|---|
| | VOLTAGE - FULL SCALE = 10 VOLTS | | | |
| 46 | 6247 1' | 6063 1' | 5726 1' | 5775 1' |
| 47 | 5922 1' | 5965 1' | 4680 1' | 5280 1' |
| 48 | 6008 1' | 4249 1' | 5654 1' | 5723 1' |
| 49 | 5648 1' | 5621 1' | 5408 1' | 5442 1' |
| 50 | 6296 1' | 6219 1' | 5742 1' | 5193 1' |
| 51 | 6366 1' | 6361 1' | 5208 1' | 5350 1' |
| 52 | 6107 1' | 5152 1' | 5797 1' | 5506 1' |
| 53 | 6235 1' | 5908 1' | 5390 1' | 5668 1' |
| 54 | 6206 1' | 6376 1' | 5813 1' | 5056 1' |
| 55 | 6290 1' | 6403 1' | 5808 1' | 5766 1' |
| 56 | 5711 1' | 5959 1' | 5273 1' | 5486 1' |
| 57 | 5905 1' | 6030 1' | 5566 1' | 5814 1' |
| 58 | 5937 1' | 5873 1' | 5174 1' | 5133 1' |
| 59 | 5888 1' | 5126 1' | 5599 1' | 5612 1' |
| 60 | 6219 1' | 6619 1' | 5764 1' | 5704 1' |
| 61 | 6182 1' | 6365 1' | 5428 1' | 5793 1' |
| 62 | 6144 1' | 6091 1' | 5702 1' | 5493 1' |
| 63 | 6288 1' | 6247 1' | 5615 1' | 5307 1' |
| 64 | 6196 1' | 5873 1' | 5552 1' | 5477 1' |
| 65 | 5582 1' | 6245 1' | 5621 1' | 5564 1' |

CALIBRATION CHECK

| CALIBRATION RESISTOR | | | |
|---|---|---|---|
| | VOLTAGE - FULL SCALE = 100 VOLTS | | |
| 20 MEG | 2000 2' | 2000 2' | 1999 2' |
| 10 MEG | 0995 2' | 0995 2' | 0995 2' |
| 5 MEG' | 0495 2' | 0495 2' | 0495 2' |

| | | |
|---|---|---|
| TEST CONDUCTED FOR: NASA, OFFICE OF ADVANCED RESEARCH AND TECHNOLOGY | | DATE: 5-1-65 |
| TEST: POST-360HR. MEAS. - STEP 1 | SAMPLE NUMBER: NOTED | BAROM. PRESS. IN. HG. |
| PART NAME & NUMBER: DTL NAND/NOR GATE - SL 1519 | TEST MEDIUM: AIR | WET BULB TEMP. 63°F |
| MANUFACTURER: A | TEST TEMP. 73° C. ☐ F. ☒ | DRY BULB TEMP. 73°F |
| ENGINEER | TECHNICIAN: J. CALLEY | INSPECTOR |
| REF. SPEC. | | DATA SHEET NUMBER |

JOB NUMBER A0-138-AE PAGE OF TEST REPORT NO. TR1-1188

2011
4/65

GENERAL PRECISION, INC.
LIBRASCOPE GROUP

# ENVIRONMENTAL LABORATORY DATA SHEET

GROUP I - INSTRUMENTATION CONTROL

PARAMETER: LEAKAGE CURRENT NO. 1 AT 4 VOLTS
CALIBRATION CHECK WITH 10 MEG

| CALIBRATION VOLTAGE | CURRENT - FULL SCALE = 100NA | | |
|---|---|---|---|
| 1.0 V | 1000 2' | 0999 2' | 1000 2' |
| 0.5 V | 0495 2' | 0495 2' | 0495 2' |

| SAMPLE NUMBER | LEAKAGE CURRENT - FULL SCALE = 100NA | | | |
|---|---|---|---|---|
| | I1 | I2 | I8 | I9 |
| 1 | 0404 3' | 0170 2' | 0663 2' | 0284 2' |
| 2 | 0184 2' | 0234 2' | 0266 3' | 0437 2' |
| 3 | 0539 2' | 0449 2' | 0128 3' | 0128 3' |
| 4 | 0138 3' | 0184 2' | 0196 2' | 0088 2' |
| 5' | 0282 3' | 0114 3' | 0172 3' | 0178 3' |

| | | |
|---|---|---|
| TEST CONDUCTED FOR: NASA, OFFICE OF ADVANCED RESEARCH AND TECHNOLOGY | | DATE: 4-30-65 |
| TEST: POST-360 HR. MEAS. -STEP 1 | SAMPLE NUMBER: NOTED | BAROM. PRESS. IN. HG. |
| PART NAME & NUMBER: DTL NAND/NOR GATE - SL1519 | TEST MEDIUM: AIR | WET BULB TEMP. 69°F |
| MANUFACTURER: A | TEST TEMP. 73° C. ☐ F. ☒ | DRY BULB TEMP. 73°F |
| ENGINEER | TECHNICIAN: J. CALLEY | INSPECTOR |
| REF. SPEC. | | DATA SHEET NUMBER |

JOB NUMBER AO-138-AE PAGE OF TEST REPORT NO. TR1-1188

2011
4/65

GENERAL PRECISION, INC.
LIBRASCOPE GROUP

# ENVIRONMENTAL LABORATORY DATA SHEET

GROUP III - TEMP. CYCLE STEP STRESS

PARAMETER: LEAKAGE CURRENT NO. 1 AT 4 VOLTS

CURRENT - FULL SCALE = 100NA

| SAMPLE NUMBER | I1 | I2 | I8 | I9 |
|---|---|---|---|---|
| 46 | 0056 2' | 0237 2' | 0112 2' | |
| 47 | 0182 2' | 0273 2' | 1282 2' | 0944 2' |
| 48 | 0862 2' | 0751 3' | 0616 2' | 0593 2' |
| 49 | 1052 2' | 0548 2' | 0528 2' | 0317 2' |
| 50 | 0093 2' | 0169 2' | 0463 2' | 0185 3' |
| 51 | 0088 2' | 0077 2' | 0155 3' | 0226 2' |
| 52 | 0305 2' | 0244 3' | 0399 2' | 1237 2' |
| 53 | 0446 2' | 0731 2' | 0193 3' | 0622 2' |
| 54 | 0168 2' | 0070 2' | 0139 2' | 0434 2' |
| 55 | 0108 2' | 0046 2' | 0150 2' | 0313 2' |
| 56 | 0692 2' | 0312 2' | 0172 3' | 0383 2' |
| 57 | 0159 2' | 0899 2' | 0135 2' | 0066 2' |
| 58 | 0426 2' | 0410 2' | 1027 2' | 0142 3' |
| 59 | 0169 3' | 0318 3' | 1112 2' | 0941 2' |
| 60 | 0102 2' | 0078 2' | 0359 2' | 0284 2' |
| 61 | 0034 2' | 0045 2' | 0300 2' | 0130 2' |
| 62 | 0558 2' | 0191 2' | 0125 2' | 0829 2' |
| 63 | 0053 2' | 0410 2' | 0299 2' | 0367 2' |
| 64 | 0152 2' | 0930 2' | 0339 2' | 1004 2' |
| 65 | 0195 2' | 0184 2' | 0510 2' | 0444 2' |

CALIBRATION CHECK - 100NA

| CALIBRATION VOLTAGE | | | |
|---|---|---|---|
| 1.0 V | 1003 2' | 1002 2' | 1002 2' |
| 0.5 V' | 0495 2' | 0497 2' | 0497 2' |

| | | |
|---|---|---|
| TEST CONDUCTED FOR: NASA OFFICE OF ADVANCED RESEARCH AND TECHNOLOGY | | DATE: 4-30-65 |
| TEST: POST-360 HR. MEAS. - STEP 1 | SAMPLE NUMBER: NOTED | BAROM. PRESS. IN. HG. |
| PART NAME & NUMBER: DTL NAND/NOR GATE - SL1519 | TEST MEDIUM: AIR | WET BULB TEMP. 64°F |
| MANUFACTURER: A | TEST TEMP. 73° C. ☐ F. ☒ | DRY BULB TEMP. 73°F |
| ENGINEER | TECHNICIAN: J. CALLEY | INSPECTOR |
| REF. SPEC. | | DATA SHEET NUMBER |

JOB NUMBER A0-138-AE PAGE OF TEST REPORT NO. TR1-1188

2011
4/65

GENERAL PRECISION, INC.
LIBRASCOPE GROUP

# ENVIRONMENTAL LABORATORY DATA SHEET

GROUP I - INSTRUMENTATION CONTROL

PARAMETER: LEAKAGE CURRENT NO. 2

CALIBRATION CHECK WITH 10 MEG

CALIBRATION VOLTAGE — CURRENT - FULL SCALE = 100 NA

| | | | |
|---|---|---|---|
| 1.0 V | 1001 2' | 1000 2' | 1000 2' |
| 0.5 V | 0495 2' | 0494 2' | 0495 2' |

LEAKAGE CURRENT IN NANOAMPS

| SAMPLE NUMBER | I1 | I2 | I3 | I8 | I9 |
|---|---|---|---|---|---|
| 1 | 0330 3' | 0122 2' | 0119 2' | 0214 2' | 0092 2' |
| 2 | 0129 2' | 0161 2' | 0150 2' | 1219 2' | 0172 2' |
| 3 | 0331 2' | 0295 2' | 0443 2' | 0546 2' | 0601 2' |
| 4 | 1149 2' | 0123 2' | 0171 3' | 0065 2' | 0043 2' |
| 5' | 0225 3' | 1051 2' | 0538 2' | 0703 2' | 0847 2' |

| | | |
|---|---|---|
| TEST CONDUCTED FOR: NASA, OFFICE OF ADVANCED RESEARCH AND TECHNOLOGY | | DATE: 4-30-65 |
| TEST: POST-360 HR. MEAS. - STEP 1 | SAMPLE NUMBER: NOTED | BAROM. PRESS. IN. HG. |
| PART NAME & NUMBER: DTL NAND/NOR GATE - SL1519 | TEST MEDIUM: AIR | WET BULB TEMP. 64°F |
| MANUFACTURER: A | TEST TEMP. 73° C. ☐ F. ☒ | DRY BULB TEMP. 73°F |
| ENGINEER | TECHNICIAN: J. CALLEY | INSPECTOR |
| REF. SPEC. | | DATA SHEET NUMBER |

JOB NUMBER A0-138-AE PAGE OF TEST REPORT NO. TR1-1188

2011
4/65

GENERAL PRECISION, INC.
LIBRASCOPE GROUP

# ENVIRONMENTAL LABORATORY DATA SHEET

GROUP III - TEMP STEP STRESS GROUP

PARAMETER: LEAKAGE CURRENT NO. 2

| SAMPLE NUMBER | LEAKAGE CURRENT IN NANOAMPS I1 | I2 | I3 | I8 | I9 |
|---|---|---|---|---|---|
| 46 | 0128 2' | 0043 2' | 0205 2' | 0102 2' | 0054 2' |
| 47 | 0122 2' | 0185 2' | 0173 2' | 0376 2' | 0190 2' |
| 48 | 0564 2' | 0769 3' | 0293 2' | 0244 2' | 0253 2' |
| 49 | 0691 2' | 0356 2' | 0455 2' | 0180 2' | 0114 2' |
| 50 | 0069 2' | 0114 2' | 0093 2' | 0223 2' | 0145 3' |
| 51 | 0063 2' | 0057 2' | 0175 2' | 0291 2' | 0090 2' |
| 52 | 0191 2' | 0247 3' | 0558 2' | 0173 2' | 0815 2' |
| 53 | 0299 2' | 0510 2' | 0811 2' | 0885 2' | 0250 2' |
| 54 | 0108 2' | 0037 2' | 0806 3' | 0050 2' | 0154 2' |
| 55 | 0083 2' | 0031 2' | 0079 2' | 0064 2' | 0134 2' |
| 56 | 0494 2' | 0244 2' | 0388 2' | 0628 2' | 0159 2' |
| 57 | 0103 2' | 0522 2' | 0049 2' | 0045 2' | 0031 2' |
| 58 | 0326 2' | 0272 2' | 0162 2' | 0242 2' | 0555 2' |
| 59 | 1279 2' | 0242 3' | 1250 2' | 0403 2' | 0420 2' |
| 60 | 0078 2' | 0048 2' | 0058 2' | 0153 2' | 0099 2' |
| 61 | 0028 2' | 0046 2' | 0041 2' | 0079 2' | 0053 2' |
| 62 | 0406 2' | 0146 2' | 0120 2' | 0053 2' | 0297 2' |
| 63 | 0068 2' | 0307 2' | 0076 2' | 0111 2' | 0105 2' |
| 64 | 0103 2' | 0717 2' | 0608 2' | 0122 2' | 0410 2' |
| 65 | 0127 2' | 0131 2' | 0441 2' | 0198 2' | 0249 2' |

CALIBRATION CHECK

| CALIBRATION VOLTAGE | CURRENT - FULL SCALE = 100 NA | | |
|---|---|---|---|
| 1.0 V | 1006 2' | 1005 2' | 1005 2' |
| 0.5 V' | 0499 2' | 0500 2' | 0501 2' |

| | | |
|---|---|---|
| TEST CONDUCTED FOR: NASA, OFFICE OF ADVANCED RESEARCH AND TECHNOLOGY | | DATE: 4-30-65 |
| TEST: POST-360 HR. MEAS. - STEP 1 | SAMPLE NUMBER: NOTED | BAROM. PRESS. IN. HG. |
| PART NAME & NUMBER: DTL NAND/NOR GATE-SL15,19 | TEST MEDIUM: AIR | WET BULB TEMP. 64°F |
| MANUFACTURER: A | TEST TEMP. 73° C. ☐ F. ☒ | DRY BULB TEMP. 73°F |
| ENGINEER | TECHNICIAN: J. CALLEY | INSPECTOR |
| REF. SPEC. | | DATA SHEET NUMBER |

JOB NUMBER A0-138-AE PAGE OF TEST REPORT NO. TR1-1188

2011
4/65

GENERAL PRECISION, INC.
LIBRASCOPE GROUP

# ENVIRONMENTAL LABORATORY DATA SHEET

GROUP I - INSTRUMENTATION CONTROL

PARAMETER: RESISTANCE MEASUREMENTS AT 1 MA

CALIBRATION CHECK AT 1 MA

| CALIBRATION RESISTOR | VOLTAGE - FULL SCALE = 10 VOLTS | | |
|---|---|---|---|
| 2000 OHMS | 0202 2' | 0201 2' | 0202 2' |
| 1000 OHMS | 0097 2' | 0097 2' | 0097 2' |
| 500 OHMS | | | |

| SAMPLE NUMBER | RESISTANCE - FULL SCALE = 10 OK OHMS | | | |
|---|---|---|---|---|
| | SECTION I | | SECTION II | |
| | R1+R2 | R4 | R1+R2 | R4 |
| 1 | 0357 2' | 0265 2' | 0278 2' | 0264 2' |
| 2 | 0350 2' | 0261 2' | 0275 2' | 0262 2' |
| 3 | 0366 2' | 0277 2' | 0294 2' | 0276 2' |
| 4 | 0356 2' | 0267 2' | 0284 2' | 0268 2' |
| 5'2' | 0362 2' | 0274 2' | 0292 2' | 0275 2' |

| | | |
|---|---|---|
| TEST CONDUCTED FOR: NASA, OFFICE OF ADVANCED RESEARCH AND TECHNOLOGY | | DATE: 5-3-65 |
| TEST: POST-360 HR. MEAS. | SAMPLE NUMBER: NOTED | BAROM. PRESS. IN. HG. |
| PART NAME & NUMBER: DTL NAND/NOR GATE - SL1519 | TEST MEDIUM: AIR | WET BULB TEMP. 58°F |
| MANUFACTURER: A | TEST TEMP. 68° C. ☐ F. ☒ | DRY BULB TEMP. 68°F |
| ENGINEER | TECHNICIAN: J. CALLEY | INSPECTOR |
| REF. SPEC. | | DATA SHEET NUMBER |

JOB NUMBER A0-138-AE PAGE OF TEST REPORT NO. TR1-1188

2011
4/65

GENERAL PRECISION, INC.
LIBRASCOPE GROUP

# ENVIRONMENTAL LABORATORY DATA SHEET

GROUP III - TEMP CYCLE STEP STRESS GROUP

PARAMETER: RESISTANCE MEASUREMENTS AT 1 MA

RESISTANCE - FULL SCALE = 100 K OHMS

| SAMPLE NUMBER | SECTION I R1+R2 | SECTION I R4 | SECTION II R1+R2 | SECTION II R4 |
|---|---|---|---|---|
| 46 | 0365 2' | 0278 2' | 0291 2' | 0277 2' |
| 47 | 0356 2' | 0266 2' | 0278 2' | 0264 2' |
| 48 | 0362 2' | 0275 2' | 0291 2' | 0276 2' |
| 49 | 0358 2' | 0267 2' | 0281 2' | 0265 2' |
| 50 | 0367 2' | 0283 2' | 0296 2' | 0282 2' |
| 51 | 0366 2' | 0283 2' | 0295 2' | 0282 2' |
| 52 | 0364 2' | 0275 2' | 0293 2' | 0276 2' |
| 53 | 0365 2' | 0278 2' | 0295 2' | 0278 2' |
| 54 | 0356 2' | 0271 2' | 0287 2' | 0271 2' |
| 55 | 0356 2' | 0273 2' | 0286 2' | 0272 2' |
| 56 | 0345 2' | 0259 2' | 0268 2' | 0258 2' |
| 57 | 0362 2' | 0272 2' | 0290 2' | 0274 2' |
| 58 | 0343 2' | 0259 2' | 0264 2' | 0256 2' |
| 59 | 0428 2' | 0278 2' | 0309 2' | 0300 2' |
| 60 | 0372 2' | 0302 2' | 0302 2' | 0300 2' |
| 61 | 0360 2' | 0275 2' | 0289 2' | 0275 2' |
| 62 | 073 2' | 0273 2' | 0290 2' | 0272 2' |
| 63 | 0362 2' | 0271 2' | 0287 2' | 0268 2' |
| 64 | 0359 2' | 0269 2' | 0276 2' | 0263 2' |
| 65 | 0363 2' | 0273 2' | 0293 2' | 0271 2' |

CALIBRATION CHECK

VOLTAGE - FULL SCALE = 100 VOLTS

| CALIBRATION RESISTOR | | | |
|---|---|---|---|
| 2000 OHMS | 0201 2' | 0202 2' | 0201 2' |
| 1000 OHMS | 0097 2' | 0097 2' | 0097 2' |
| 500 OHMS' | | | |

| | | |
|---|---|---|
| TEST CONDUCTED FOR: NASA OFFICE OF ADVANCED RESEARCH AND TECHNOLOGY | | DATE: 5-3-65 |
| TEST: POST-360 HR. MEAS. -STEP 1 | SAMPLE NUMBER: NOTED | BAROM. PRESS. IN. HG. |
| PART NAME & NUMBER: DTL NAND/NOR GATE - SL1519 | TEST MEDIUM: AIR | WET BULB TEMP. 58°F |
| MANUFACTURER: A | TEST TEMP. 68° C. ☐ F. ☒ | DRY BULB TEMP. 68°F |
| ENGINEER | TECHNICIAN: J. CALLEY | INSPECTOR |
| REF. SPEC. | | DATA SHEET NUMBER |

JOB NUMBER AO-138-AE PAGE OF TEST REPORT NO. TR1-1188

2011
4/65

GENERAL PRECISION, INC.
LIBRASCOPE GROUP

# ENVIRONMENTAL LABORATORY DATA SHEET

GROUP I - INSTRUMENTATION CONTROL

CALIBRATION RESISTOR — CURRENT - FULL SCALE = 10 MA

| | | | |
|---|---|---|---|
| 2000 OHMS | 1999 7' | 2001 7' | 2000 7' |
| 1000 OHMS | 4007 7' | 4006 7' | 4007 7' |

PARAMETER: DIODE FORWARD CURRENT WITH V10 = 4 VOLTS

CURRENT FULL SCALE = 10 MA

| SAMPLE NUMBER | If1 | If2 | If8 | If9 |
|---|---|---|---|---|
| 1 | 1319 7' | 1331 7' | 1403 7' | 1419 7' |
| 2 | 1459 7' | 1472 7' | 1466 7' | 1468 7' |
| 3 | 1414 7' | 1411 7' | 1415 7' | 1416 7' |
| 4 | 1574 7' | 1570 7' | 1594 7' | 1586 7' |
| 5' | 1443 7' | 1441 7' | 1464 7' | 1456 7' |

| | | |
|---|---|---|
| TEST CONDUCTED FOR: NASA, OFFICE OF ADVANCED RESEARCH AND TECHNOLOGY | | DATE: 5-3-65 |
| TEST: POST - 360 HR. MEAS -STEP 1 | SAMPLE NUMBER: NOTED | BAROM. PRESS. IN. HG. |
| PART NAME & NUMBER: DTL NAND/NOR GATE - SL1519 | TEST MEDIUM: AIR | WET BULB TEMP. 58°F |
| MANUFACTURER: A | TEST TEMP. 68° C. ☐ F. ☒ | DRY BULB TEMP. 68°F |
| ENGINEER | TECHNICIAN: J. CALLEY | INSPECTOR |
| REF. SPEC. | | DATA SHEET NUMBER |

JOB NUMBER Ao-138-AE PAGE OF TEST REPORT NO. TR1-1188

2011
4/65

GENERAL PRECISION, INC.
LIBRASCOPE GROUP

# ENVIRONMENTAL LABORATORY DATA SHEET

GROUP III - TEMP CYCLE STEP STRESS GROUP

PARAMETER: DIODE FORWARD CURRENT WITH V10 = 4 VOLTS

| SAMPLE NUMBER | If1 | If2 | If8 | If9 |
|---|---|---|---|---|
| | CURRENT - FULL SCALE = 10 MA | | | |
| 46 | 1437 7' | 1431 7' | 1454 7' | 1458 7' |
| 47 | 1566 7' | 1575 7' | 1592 7' | 1601 7' |
| 48 | 1455 7' | 1457 7' | 1450 7' | 1449 7' |
| 49 | 1575 7' | 1582 7' | 1606 7' | 1599 7' |
| 50 | 1300 7' | 1303 7' | 1299 7' | 1258 7' |
| 51 | 1260 7' | 1262 7' | 1279 7' | 1279 7' |
| 52 | 1438 7' | 1436 7' | 1447 7' | 1443 7' |
| 53 | 1414 7' | 1419 7' | 1415 7' | 1417 7' |
| 54 | 1506 7' | 1515 7' | 1521 7' | 1527 7' |
| 55 | 1556 7' | 1562 7' | 1569 7' | 1571 7' |
| 56 | 1638 7' | 1656 7' | 1595 7' | 1596 7' |
| 57 | 1518 7' | 1517 7' | 1525 7' | 1529 7' |
| 58 | 1656 7' | 1684 7' | 1712 7' | 1716 7' |
| 59 | 1438 7' | 1442 7' | 1419 7' | 1260 7' |
| 60 | 1009 7' | 1371 7' | 1375 7' | 1373 7' |
| 61 | 1416 7' | 1422 7' | 1436 7' | 1432 7' |
| 62 | 1490 7' | 1502 7' | 1512 7' | 1510 7' |
| 63 | 1487 7' | 1496 7' | 1494 7' | 1503 7' |
| 64 | 1636 7' | 1632 7' | 1696 7' | 1699 7' |
| 65 | 1514 7' | 1516 7' | 1391 7' | 1390 7' |

CALIBRATION CHECK

| CALIBRATION RESISTOR | | | |
|---|---|---|---|
| | CURRENT - FULL SCALE = 10 MA | | |
| 2000 OHMS | 2020 7' | 2015 7' | 2025 7' |
| 1000 OHMS' | 4020 7' | 4026 7' | 4022 7' |

| | | |
|---|---|---|
| TEST CONDUCTED FOR: NASA, OFFICE OF ADVANCED RESEARCH AND TECHNOLOGY | | DATE: 5-3-65 |
| TEST: POST - 360 HR. MEAS. - STEP 1 | SAMPLE NUMBER: NOTED | BAROM. PRESS. IN. HG. |
| PART NAME & NUMBER: DTL NAND/NOR GATE - SL1519 | TEST MEDIUM: AIR | WET BULB TEMP. 58° F |
| MANUFACTURER: A | TEST TEMP. 68° C. ☐ F. ☒ | DRY BULB TEMP. 68°F |
| ENGINEER | TECHNICIAN: J. CALLEY | INSPECTOR |
| REF. SPEC. | | DATA SHEET NUMBER |

JOB NUMBER AO-138-AE PAGE OF TEST REPORT NO. TR1-1188

2011
4/65

GENERAL PRECISION, INC.
LIBRASCOPE GROUP

# ENVIRONMENTAL LABORATORY DATA SHEET

GROUP I - INSTRUMENTATION CONTROL

PARAMETER: OUTPUT SATURATION VOLTAGE WITH V10 = 4 VOLTS - I4 = 10 MA (SECTION I)
V10 = 4 VOLTS - I6 = 10 MA (SECTION II)

CALIBRATION CHECK AT 10 MA AND 1 MA

| CALIBRATION RESISTOR | VOLTAGE - FULL SCALE = 10 VOLTS | | |
|---|---|---|---|
| 500 OHMS | 0500 1' | 0500 1' | 0501 1' |
| 50 OHMS | 0502 1' | 0502 1' | 0503 1' |

| SAMPLE NUMBER | VOLTAGE - FULL SCALE = 10 VOLTS SECTION I V4 | SECTION II V6 |
|---|---|---|
| 1 | 0291 1' | 0265 1' |
| 2 | 0241 1' | 0242 1' |
| 3 | 0281 1' | 0284 1' |
| 4 | 0224 1' | 0227 1' |
| 5' | 0268 1' | 0260 1' |

| | | |
|---|---|---|
| TEST CONDUCTED FOR: NASA, OFFICE OF ADVANCED RESEARCH AND TECHNOLOGY | | DATE: 5-3-65 |
| TEST: POST-360 HR. MEAS. -STEP 1 | SAMPLE NUMBER: NOTED | BAROM. PRESS. IN. HG. |
| PART NAME & NUMBER: DTL NAND/NOR GATE - SL 1519 | TEST MEDIUM: AIR | WET BULB TEMP. 58°F |
| MANUFACTURER: A | TEST TEMP. 68° C. ☐ F. ☒ | DRY BULB TEMP. 68°F |
| ENGINEER | TECHNICIAN: J. CALLEY | INSPECTOR |
| REF. SPEC. | | DATA SHEET NUMBER |

JOB NUMBER AO-138-AE PAGE OF TEST REPORT NO. TR1-1188

2011

GENERAL PRECISION, INC.
LIBRASCOPE GROUP

# ENVIRONMENTAL LABORATORY DATA SHEET

GROUP III - TEMP CYCLE STEP STRESS GROUP

PARAMETER: OUTPUT SATURATION VOLTAGE WITH V10 = 4 VOLTS - I4 = 10 MA (SECTION I)
V10 = 4 VOLTS - I6 = 10 MA (SECTION II)

| SAMPLE NUMBER | VOLTAGE - FULL SCALE = 10 VOLTS SECTION I V4 | SECTION II V6 |
|---|---|---|
| 46 | 0302 1' | 0304 1' |
| 47 | 0272 1' | 0248 1' |
| 48 | 0273 1' | 0274 1' |
| 49 | 0265 1' | 0257 1' |
| 50 | 0310 1' | 0308 1' |
| 51 | 0291 1' | 0304 1' |
| 52 | 0268 1' | 0269 1' |
| 53 | 0311 1' | 0296 1' |
| 54 | 0271 1' | 0273 1' |
| 55 | 0326 1' | 0328 1' |
| 56 | 0266 1' | 0265 1' |
| 57 | 0311 1' | 0317 1' |
| 58 | 0324 1' | 0315 1' |
| 59 | 0287 1' | 0293 1' |
| 60 | 0240 1' | 0226 1' |
| 61 | 0260 1' | 0255 1' |
| 62 | 0258 1' | 0260 1' |
| 63 | 0253 1' | 0255 1' |
| 64 | 0265 1' | 0279 1' |
| 65 | 0280 1' | 0264 1' |

CALIBRATION CHECK AT 10 MA AND 1 MA

| CALIBRATION RESISTOR | VOLTAGE - FULL SCALE = 10 VOLTS | | |
|---|---|---|---|
| 500 OHMS | 0497 1' | 0497 1' | 0497 1' |
| 50 OHMS' | 0498 1' | 0498 1' | 0498 1' |

| | | |
|---|---|---|
| TEST CONDUCTED FOR: NASA OFFICE OF ADVANCED RESEARCH AND TECHNOLOGY | | DATE: 5-3-65 |
| TEST: PAST - 360 HR. MEAS. - STEP 1 | SAMPLE NUMBER: NOTED | BAROM. PRESS. IN. HG. |
| PART NAME & NUMBER: DTL NAND/NOR GATE - SL1519 | TEST MEDIUM: AIR | WET BULB TEMP. 59°F |
| MANUFACTURER: A | TEST TEMP. 68° C. ☐ F. ☒ | DRY BULB TEMP. 68°F |
| ENGINEER / TECHNICIAN: J. CALLEY | INSPECTOR | |
| REF. SPEC. | DATA SHEET NUMBER | |

JOB NUMBER AO-138-AE PAGE OF TEST REPORT NO. TR1-1188

2011

GENERAL PRECISION, INC.
LIBRASCOPE GROUP

# ENVIRONMENTAL LABORATORY DATA SHEET

GROUP I - INSTRUMENTATION CONTROL

OARAMETER: DC CURRENT GAIN AT VCE = 2.5 VOLTS
IC = 1.+ MA

CALIBRATION: NONE

BASE CURRENT- FULL SCALE = 1000 UA

| SAMPLE NUMBER | IB |
|---|---|
| 1 | 172 |
| 2 | 174 |
| 3 | 141 |
| 4 | 131 |
| 5' | 157 |

| | | |
|---|---|---|
| TEST CONDUCTED FOR: NASA OFFICE OF ADVANCED RESEARCH AND TECHNOLOGY | | DATE: 5-3-65 |
| TEST: POST-360 HR. MEAS. -STEP 1 | SAMPLE NUMBER: NOTED | BAROM. PRESS. IN. HG. |
| PART NAME & NUMBER: DTL NAND/NOR GATE-SL 1519 | TEST MEDIUM: AIR | WET BULB TEMP. 58°F |
| MANUFACTURER: A | TEST TEMP. 68° C. ☐ F. ☒ | DRY BULB TEMP. 68°F |
| ENGINEER | TECHNICIAN: J. CALLEY | INSPECTOR |
| REF. SPEC. | | DATA SHEET NUMBER |

JOB NUMBER AO-138-AE PAGE OF TEST REPORT NO. TR1-1188

2011
4/65

GENERAL PRECISION, INC.
LIBRASCOPE GROUP

# ENVIRONMENTAL LABORATORY DATA SHEET

GROUP III - TEMP STEP STRESS GROUP

PARAMETER: DC CURRENT GAIN AT VCE = 2.5 VOLTS
IC = 1.0 MA

BASE CURRENT - FULL SCALE = 1000 UA

| SAMPLE NUMBER | IB |
|---|---|
| 46 | 141 |
| 47 | 174 |
| 48 | 142 |
| 49 | 178 |
| 5- | 129 |
| 51 | 117 |
| 52 | 144 |
| 53 | 136 |
| 54 | 133 |
| 55 | 143 |
| 56 | 185 |
| 57 | 154 |
| 58 | 186 |
| 59 | 153 |
| 60 | 138 |
| 61 | 124 |
| 62 | 153 |
| 63 | 162 |
| 64 | 161 |
| 65' | 169 |

| | | |
|---|---|---|
| TEST CONDUCTED FOR: NASA OFFICE OF ADVANCED RESEARCH AND TECHNOLOGY | | DATE: 5-3-65 |
| TEST: POST-360 HR. MEAS. -STEP 1 | SAMPLE NUMBER: NOTED | BAROM. PRESS. IN. HG. |
| PART NAME & NUMBER: DTL NAND/NOR GATE-SL1619 | TEST MEDIUM: AIR | WET BULB TEMP. 58°F |
| MANUFACTURER: A | TEST TEMP. 68° C. ☐ F. ☑ | DRY BULB TEMP. 68°F |
| ENGINEER | TECHNICIAN: J. CALLEY | INSPECTOR |
| REF. SPEC. | | DATA SHEET NUMBER |

JOB NUMBER AO-138-AE PAGE OF TEST REPORT NO. TR1-1188

2011

GENERAL PRECISION, INC.
LIBRASCOPE GROUP

# ENVIRONMENTAL LABORATORY DATA SHEET

G. SUP I

| TEST CONDITIONS: IF RETEST CHECK ☐ | SAMPLE NUMBER | $t_{on}$ | $t_{off}$ | $t_r$ | $t_f$ | | | |
|---|---|---|---|---|---|---|---|---|
| | | NS | NS | NS | NS | | | |
| | 1 | 43 | 37 | 42 | 21 | | | |
| | 2 | 55 | 40 | 48 | 25 | | | |
| | 3 | 61 | 37 | 50 | 25 | | | |
| | 4 | 45 | 39 | 45 | 22 | | | |
| | 5 | 63 | 43 | 56 | 27 | | | |
| SET-UP | | | | | | | | |
| (NS) / DIVISION | | 20 | 20 | 20 | 20 | | | |
| | 2 | | | | | | | |

| | | |
|---|---|---|
| TEST CONDUCTED FOR: NASA, OFFICE OF ADVANCED RESEARCH AND TECHNOLOGY | | DATE 1-28-65 |
| TEST: INITIAL MEAS. - SWITCHING CHARACTERISTICS | SAMPLE NUMBER NOTED | BAROM. PRESS. 29.84 IN. HG. |
| PART NAME & NUMBER: DTL NAND/NOR GATE - SC736 | TEST MEDIUM AIR | WET BULB TEMP. 61 °F |
| MANUFACTURER: [redacted] B | TEST TEMP. 76 ° C. ☐ F. ☒ | DRY BULB TEMP. 76 °F |
| ENGINEER: N.D. Wintanen | TECHNICIAN: D. Harris | INSPECTOR |
| REF. SPEC. | | DATA SHEET NUMBER 6 |

JOB NUMBER Ao-138-AE PAGE OF TEST REPORT NO. TR1-1188

601 2
1/64

GENERAL PRECISION, INC.
LIBRASCOPE GROUP

# ENVIRONMENTAL LABORATORY DATA SHEET

GROUP II

| TEST CONDITIONS IF RETEST CHECK | SAMPLE NUMBER | $t_{on}$ NS | $t_{off}$ NS | $t_r$ NS | $t_f$ NS | | | |
|---|---|---|---|---|---|---|---|---|
| | 6 | 38 | 50 | 62 | 22 | [illegible] | [illegible] | |
| | 7 | 36 | 48 | 59 | 22 | [illegible] | [illegible] | |
| | 8 | 34 | 55 | 60 | 20 | 40 | 61 | |
| | 9 | 39 | 40 | 50 | 23 | 45 | 46 | |
| | 10 | 34 | 61 | 66 | 19 | [illegible] | [illegible] | |
| | 11 | 37 | 46 | 58 | 22 | 42 | 53 | |
| | 12 | 35 | 53 | 61 | 20 | 41 | 59 | |
| | 13 | 37 | 47 | 55 | 22 | 43 | [illegible] | |
| | 14 | 40 | ~~40~~ 50 | 62 | 23 | 46 | [illegible] | |
| | 15 | 34 | ~~34~~ 59 | 65 | 19 | [illegible] | [illegible] | |
| | 16 | 37 | 44 | 56 | 22 | [illegible] | [illegible] | |
| | 17 | 38 | ~~38~~ 47 | 58 | 22 | [illegible] | [illegible] | |
| | 18 | 37 | ~~37~~ 50 | 61 | 23 | 43 | [illegible] | |
| | 19 | 42 | 43 | 55 | 26 | 48 | [illegible] | |
| | 20 | 37 | 41 | 49 | 22 | 43 | [illegible] | |

| | | |
|---|---|---|
| TEST CONDUCTED FOR: NASA, OFFICE OF ADVANCED RESEARCH AND TECHNOLOGY | | DATE: 1-28-65 |
| TEST: INITIAL MEAS. - SWITCHING CHARACTERISTICS | SAMPLE NUMBER: NOTED | BAROM PRESS: 29.84 IN. HG. |
| PART NAME & NUMBER: DTL NAND/NOR GATE - SC736 | TEST MEDIUM: AIR | WET BULB TEMP: 61° F |
| MANUFACTURER: [redacted] B | TEST TEMP: 76° C. ☐ F. ☒ | DRY BULB TEMP: 76° F |
| ENGINEER: N. D. Wittman | TECHNICIAN: D. Harris | INSPECTOR: |
| REF. SPEC. | | DATA SHEET NUMBER: 7 |

JOB NUMBER Ao-138-AE PAGE OF TEST REPORT NO. TR1-1188

601 2
1/64

GENERAL PRECISION, INC.
LIBRASCOPE GROUP

# ENVIRONMENTAL LABORATORY DATA SHEET

GROUP II

| TEST CONDITIONS: IF RETEST CHECK ☐ | | $t_{on}$ | $t_{off}$ | $t_r$ | $t_f$ | | | |
|---|---|---|---|---|---|---|---|---|
| | SAMPLE NUMBER | NS | NS | NS | NS | | | |
| | 21 | 38 | 54 | 64 | 22 | [illegible] | [illegible] | |
| | 22 | 39 | 58 | 71 | 23 | [illegible] | [illegible] | |
| | 23 | 38 | 54 | 66 | 23 | 44 | 60 | |
| | 24 | 39 | 56 | 67 | 20 | [illegible] | 62 | |
| | 25 | 38 | 46 | 58 | 20 | 44 | 52 | |
| | 26 | 40 | 48 | 63 | 21 | 46 | 54 | |
| | 27 | 42 | 58 | 72 | 21 | [illegible] | [illegible] | |
| | 28 | 41 | 44 | 58 | 22 | 47 | [illegible] | |
| | 29 | 38 | 48 | 58 | 20 | 44 | 54 | |
| | 30 | 43 | 38 | 52 | 28 | 49 | 44 | |
| | 31 | 44 | 56 | 68 | 27 | [illegible] | [illegible] | |
| | 32 | 43 | 45 | 55 | 24 | 49 | 51 | |
| | 33 | 41 | 42 | 52 | 22 | 47 | 48 | |
| | 34 | 42 | 56 | 69 | 23 | 48 | 62 | |
| | 35 | 42 | 50 | 62 | 21 | 48 | 56 | |

| | | |
|---|---|---|
| TEST CONDUCTED FOR: NASA, OFFICE OF ADVANCED RESEARCH AND TECHNOLOGY | | DATE: 1-28-65 |
| TEST: INITIAL MEAS. - SWITCHING CHARACTERISTICS | SAMPLE NUMBER: NOTED | BAROM PRESS.: 29.84 IN. HG. |
| PART NAME & NUMBER: DTL NAND/NOR GATE - SC736 | TEST MEDIUM: AIR | WET BULB TEMP.: 61°F |
| MANUFACTURER: [redacted] B | TEST TEMP.: 76° C. ☐ F. ☒ | DRY BULB TEMP.: 76°F |
| ENGINEER: N. A. Wittenauer | TECHNICIAN: D. Harris | INSPECTOR: |
| REF. SPEC.: | | DATA SHEET NUMBER: 8 |

JOB NUMBER Bac 138-AE PAGE OF TEST REPORT NO. TR1-1188

681-2
1/64

GENERAL PRECISION, INC.
LIBRASCOPE GROUP

# ENVIRONMENTAL LABORATORY DATA SHEET

| | TEST CONDITIONS: IF RETEST CHECK ☐ | | $t_{on}$ | $t_{OFF}$ | $t_r$ | $t_F$ | | | |
|---|---|---|---|---|---|---|---|---|---|
| GROUP I | | SAMPLE NUMBER | NS | NS | NS | NS | | | |
| | | 1 | 43 | 37 | 43 | 20 | | | |
| | | 2 | 52 | 41 | 50 | 24 | | | |
| | | 3 | 60 | 36 | 50 | 26 | | | |
| | | 4 | 44 | 39 | 46 | 21 | | | |
| | | 5 | 63 | 42 | 56 | 27 | | | |

| | | |
|---|---|---|
| TEST CONDUCTED FOR NASA, OFFICE OF ADVANCED RESEARCH AND TECHNOLOGY | | DATE 3-11-65 |
| TEST INITIAL MEAS-SWITCHING CHARACTERISTICS | SAMPLE NUMBER NOTED | BAROM. PRESS. 29.68 IN. HG. |
| PART NAME & NUMBER DTL NAND/NOR GATE-SC736 | TEST MEDIUM AIR | WET BULB TEMP. 58°F |
| MANUFACTURER B | TEST TEMP. 72° C. ☐ F. ☒ | DRY BULB TEMP. 72°F |
| ENGINEER N. D. Wistanen | TECHNICIAN R. Harris | INSPECTOR |
| REF. SPEC. | | DATA SHEET NUMBER |

JOB NUMBER A0-138-AE PAGE OF TEST REPORT NO. TR1-1188

601-2
1/64

GENERAL PRECISION, INC.
LIBRASCOPE GROUP

# ENVIRONMENTAL LABORATORY DATA SHEET

| TEST CONDITIONS: IF RETEST CHECK ☐ | | $t_{on}$ | $t_{OFF}$ | $t_r$ | $t_F$ | | | |
|---|---|---|---|---|---|---|---|---|
| | SAMPLE NUMBER | NS | NS | NS | NS | | | |
| | 36 | 35 | 53 | 63 | 20 | | | |
| | 37 | 38 | 41 | 51 | 22 | | | |
| | 38 | 41 | 56 | 71 | 23 | | | |
| | 39 | 39 | 44 | 59 | 24 | | | |
| | 40 | 36 | 51 | 63 | 21 | | | |
| | 41 | 39 | 53 | 68 | 24 | | | |
| | 42 | 37 | 48 | 61 | 20 | | | |
| | 43 | 38 | 59 | 70 | 22 | | | |
| | 44 | 35 | 45 | 54 | 21 | | | |
| | 45 | 36 | 52 | 63 | 21 | | | |
| | 46 | 40 | 45 | 60 | 23 | | | |
| | 47 | 37 | 42 | 52 | 22 | | | |
| | 48 | 40 | 52 | 65 | 23 | | | |
| | 49 | 35 | 44 | 54 | 21 | | | |
| | 50 | 36 | 53 | 64 | 21 | | | |

| | | |
|---|---|---|
| TEST CONDUCTED FOR: NASA, OFFICE OF ADVANCED RESEARCH AND TECHNOLOGY | | DATE: 3-11-65 |
| TEST: INITIAL MEAS.- SWITCHING CHARACTERISTICS | SAMPLE NUMBER: NOTED | BAROM. PRESS. 29.68 IN. HG. |
| PART NAME & NUMBER: DTL NAND/NOR GATE- SC736 | TEST MEDIUM: AIR | WET BULB TEMP. 58°F |
| MANUFACTURER: B | TEST TEMP. 72° C. ☐ F. ☒ | DRY BULB TEMP. 72°F |
| ENGINEER: N. D. Witman | TECHNICIAN: D. Harris | INSPECTOR: |
| REF. SPEC. | | DATA SHEET NUMBER |

JOB NUMBER A0-138-AE PAGE OF TEST REPORT NO. TR1-1188

601-2
1/64

GENERAL PRECISION, INC.
LIBRASCOPE GROUP

# ENVIRONMENTAL LABORATORY DATA SHEET

| TEST CONDITIONS: IF RETEST CHECK ☐ | | $t_{on}$ | $t_{OFF}$ | $t_r$ | $t_F$ | | | |
|---|---|---|---|---|---|---|---|---|
| | SAMPLE NUMBER | NS | NS | NS | NS | | | |
| | 51 | 35 | 46 | 56 | 20 | | | |
| | 52 | 38 | 50 | 62 | 20 | | | |
| | 53 | 39 | 46 | 61 | 22 | | | |
| | 54 | 38 | 49 | 61 | 22 | | | |
| | 55 | 36 | 40 | 50 | 21 | | | |
| | 56 | 43 | 46 | 58 | 25 | | | |
| | 57 | 37 | 44 | 58 | 20 | | | |
| | 58 | 34 | 53 | 60 | 19 | | | |
| | 59 | 38 | 49 | 59 | 21 | | | |
| | 60 | 39 | 45 | 59 | 22 | | | |
| | 61 | 40 | 49 | 63 | 24 | | | |
| | 62 | ~~38~~36 | 44 | 53 | 21 | | | |
| | 63 | ~~38~~36 | 48 | 61 | 20 | | | |
| | 64 | 40 | 42 | 56 | 26 | | | |
| | 65 | 34 | 51 | 60 | 20 | | | |

| | | |
|---|---|---|
| TEST CONDUCTED FOR: NASA OFFICE OF ADVANCED RESEARCH AND TECHNOLOGY | | DATE: 3-12-65 |
| TEST: INITIAL MEAS. SWITCHING CHARACTERISTICS | SAMPLE NUMBER: NOTED | BAROM. PRESS. 29.74 IN. HG. |
| PART NAME & NUMBER: DTL NAND/NOR GATE - SC736 | TEST MEDIUM: AIR | WET BULB TEMP. 59°F |
| MANUFACTURER: B | TEST TEMP. 72° C. ☐ F. ☒ | DRY BULB TEMP. 72°F |
| ENGINEER: N. D. Weitanen | TECHNICIAN: D. Harris | INSPECTOR: |
| REF. SPEC. | | DATA SHEET NUMBER |

JOB NUMBER AO-138-AE PAGE OF TEST REPORT NO. TR1-1188

601-2
1/64

GENERAL PRECISION, INC.
LIBRASCOPE GROUP

# ENVIRONMENTAL LABORATORY DATA SHEET

| GROUP I | TEST CONDITIONS: IF RETEST CHECK ☐ | SAMPLE NUMBER | $t_{on}$ | $t_{off}$ | $t_r$ | $t_f$ | | | |
|---|---|---|---|---|---|---|---|---|---|
| | | | NS | NS | NS | NS | | | |
| | | 1 | 45 | 40 | 43 | 20 | | | |
| | | 2 | 57 | 43 | 50 | 24 | | | |
| | | 3 | 64 | 38 | 49 | 26 | | | |
| | | 4 | 48 | 41 | 46 | 22 | | | |
| | | 5 | 66 | 44 | 56 | 26 | | | |
| SET-UP (NS) TIME/DIVISION | | | 20 | 20 | 20 | 20 | | | |

| | | | |
|---|---|---|---|
| TEST CONDUCTED FOR: NASA, OFFICE OF ADVANCED RESEARCH AND TECHNOLOGY | | | DATE: 3-27-65 |
| TEST: INITIAL MEAS.-SWITCHING CHARACTERISTICS | SAMPLE NUMBER: NOTED | | BAROM. PRESS. IN. HG. |
| PART NAME & NUMBER: DTL NAND/NOR GATE - SC736 | TEST MEDIUM: AIR | | WET BULB TEMP. 60 °F |
| MANUFACTURER: B | TEST TEMP. 75 | C. ☐ F. ☒ | DRY BULB TEMP. 75 °F |
| ENGINEER: N. D. Westaren | TECHNICIAN: W. Harris | INSPECTOR | |
| REF. SPEC. | | DATA SHEET NUMBER | |

JOB NUMBER Ao-138-AE PAGE OF TEST REPORT NO. TR1-1188

601-2
1/64

GENERAL PRECISION, INC.
LIBRASCOPE GROUP

# ENVIRONMENTAL LABORATORY DATA SHEET

| TEST CONDITIONS: IF RETEST CHECK ☐ | $t_{on}$ | $t_{off}$ | $t_r$ | $t_f$ | | | |
|---|---|---|---|---|---|---|---|
| SAMPLE NUMBER | NS | NS | NS | NS | | | |
| 66 | 38 | 46 | 57 | 25 | | | |
| 67 | 48 | 47 | 60 | 33 | | | |
| 68 | 40 | 41 | 52 | 26 | | | |
| 69 | 40 | 50 | 64 | 25 | | | |
| 70 | 39 | 51 | 61 | 25 | | | |
| 71 | 45 | 41 | 53 | 31 | | | |
| 72 | 39 | 41 | 51 | 26 | | | |
| 73 | 45 | 43 | 55 | 31 | | | |
| 74 | 42 | 52 | 66 | 27 | | | |
| 75 | 39 | 49 | 59 | 25 | | | |
| 76 | 41 | 54 | 66 | 27 | | | |
| 77 | 44 | 52 | 63 | 30 | | | |
| 78 | 44 | 42 | 56 | 30 | | | |
| 79 | 47 | 46 | 60 | 33 | | | |
| 80 | 44 | 43 | 55 | 31 | | | |

| | | |
|---|---|---|
| TEST CONDUCTED FOR: NASA, OFFICE OF ADVANCED RESEARCH AND TECHNOLOGY | | DATE: 3-27-65 |
| TEST: INITIAL MEAS. - SWITCHING CHARACTERISTICS | SAMPLE NUMBER: NOTED | BAROM. PRESS. IN. HG |
| PART NAME & NUMBER: DTL NAND/NOR GATE - SC736 | TEST MEDIUM: AIR | WET BULB TEMP: 60 °F |
| MANUFACTURER: B | TEST TEMP.: 75 C. ☐ F. ☒ | DRY BULB TEMP.: 75 °F |
| ENGINEER: N. D. Witanen | TECHNICIAN: W. Harris | INSPECTOR: |
| REF. SPEC. | | DATA SHEET NUMBER |

JOB NUMBER Ao-138-AE PAGE OF TEST REPORT NO. TR1-1188

601 2
1/64

GENERAL PRECISION, INC.
LIBRASCOPE GROUP

# ENVIRONMENTAL LABORATORY DATA SHEET

| TEST CONDITIONS: IF RETEST CHECK ☐ | $t_{on}$ | $t_{off}$ | $t_r$ | $t_f$ |
|---|---|---|---|---|
| SAMPLE NUMBER | NS | NS | NS | NS |
| 81 | 42 | 41 | 52 | 29 |
| 82 | 44 | 43 | 56 | 30 |
| 83 | 37 | 54 | 63 | 25 |
| 84 | 41 | 49 | 62 | 25 |
| 85 | 42 | 54 | 68 | 27 |
| 86 | 39 | 43 | 55 | 25 |
| 87 | 42 | 46 | 62 | 29 |
| 88 | 42 | 49 | 64 | 26 |
| 89 | 40 | 51 | 65 | 26 |
| 90 | 41 | 53 | 64 | 26 |
| 91 | 48 | 49 | 61 | 32 |
| 92 | 42 | 45 | 60 | 32 |
| 93 | 46 | 47 | 59 | 31 |
| 94 | 40 | 49 | 62 | 26 |
| 95 | 36 | 53 | 62 | 23 |

| | | |
|---|---|---|
| TEST CONDUCTED FOR: NASA, OFFICE OF ADVANCED RESEARCH AND TECHNOLOGY | | DATE: 3-27-65 |
| TEST: INITIAL MEAS.-SWITCHING CHARACTERISTICS | SAMPLE NUMBER: NOTED | BAROM. PRESS. IN. HG |
| PART NAME & NUMBER: DTL NAND/NOR GATE - SC736 | TEST MEDIUM: AIR | WET BULB TEMP. 60°F |
| MANUFACTURER: B | TEST TEMP. 75 C. ☐ F. ☑ | DRY BULB TEMP. 75°F |
| ENGINEER: N. D. Witanen | TECHNICIAN: D. Harris | INSPECTOR |
| REF. SPEC. | | DATA SHEET NUMBER |

JOB NUMBER Ao-138-AE PAGE OF TEST REPORT NO. TR1-1188

601 2
1/64

GENERAL PRECISION, INC.
LIBRASCOPE GROUP

# ENVIRONMENTAL LABORATORY DATA SHEET

| TEST CONDITIONS: IF RETEST CHECK ☐ | | $t_{on}$ | $t_{off}$ | $t_r$ | $t_f$ | | | |
|---|---|---|---|---|---|---|---|---|
| | SAMPLE NUMBER | NS | NS | NS | NS | | | |
| | 96 | 35 | 39 | 49 | 24 | | | |
| | 97 | 39 | 42 | 56 | 28 | | | |
| | 98 | ~~35~~ 34 | 56 | 64 | 24 | | | |
| | 99 | 38 | 43 | 60 | 27 | | | |
| | 100 | 38 | 44 | 61 | 28 | | | |
| | 101 | 38 | 38 | 52 | 26 | | | |
| | 102 | 35 | 49 | 63 | 24 | | | |
| | 103 | 38 | 49 | 66 | 27 | | | |
| | 104 | 36 | 48 | 60 | 25 | | | |
| | 105 | 36 | 34 | 49 | 27 | | | |
| | 106 | 35 | 52 | 66 | 22 | | | |
| | 107 | 37 | 37 | 52 | 28 | | | |
| | 108 | 35 | 52 | 64 | 26 | | | |
| | 109 | 37 | 46 | 60 | 27 | | | |
| | 110 | 38 | 39 | 56 | 27 | | | |
| | 111 | 34 | 44 | 57 | 24 | | | |
| | 112 | 41 | 42 | 57 | 28 | | | |
| | 113 | 37 | 51 | 65 | 27 | | | |
| | 114 | 36 | 50 | 61 | 24 | | | |
| | 115 | 36 | 44 | 60 | 25 | | | |

| | | |
|---|---|---|
| TEST CONDUCTED FOR: NASA, OFFICE OF ADVANCED RESEARCH AND TECHNOLOGY | | DATE: 4-5-65 |
| TEST: INITIAL MEAS. - SWITCHING CHARACTERISTICS | SAMPLE NUMBER: NOTED | BAROM. PRESS.: 30.21 IN. HG. |
| PART NAME & NUMBER: 1 DTL NAND/NOR GATE - SC736 | TEST MEDIUM: AIR | WET BULB TEMP: 60°F |
| MANUFACTURER: B | TEST TEMP.: 74 C. ☐ F. ☒ | DRY BULB TEMP.: 74°F |
| ENGINEER | TECHNICIAN: W. Harris | INSPECTOR |
| REF. SPEC. | | DATA SHEET NUMBER |

JOB NUMBER A0-138-AE PAGE OF TEST REPORT NO. TR1-1188

60: 2

GENERAL PRECISION, INC.
LIBRASCOPE GROUP

# ENVIRONMENTAL LABORATORY DATA SHEET

TEST CONDITIONS:
IF RETEST CHECK ☐

GROUP I

| SAMPLE NUMBER | $BV_7$ VOLTS | $BV_8$ VOLTS | $BV_9$ VOLTS | $BV_{CBO}$ VOLTS |
|---|---|---|---|---|
| 1 | 26.9 | 26.8 | 26.9 | 22.6 |
| 2 | 25.3 | 25.2 | 25.1 | 19.1 |
| 3 | 26.0 | 26.4 | 26.5 | 25.5 |
| 4 | 27.2 | 27.0 | 27.1 | 26.5 |
| 5 | 24.5 | 24.6 | 24.4 | 20.0 |

CALIBRATION CHECK - BREAKDOWN VOLTAGE
I = 1 μADC

| | CALIB. RESISTOR | VOLTAGE |
|---|---|---|
| START OF TEST: | 20 MEG | 20.00 |
| | 10 MEG | 10.00 |
| | 5 MEG | 5.01 |
| COMPLETION OF TEST: | 20 MEG | 20.00 |
| | 10 MEG | 10.00 |
| | 5 MEG | 5.01 |

| | | |
|---|---|---|
| TEST CONDUCTED FOR: NASA, OFFICE OF ADVANCED RESEARCH AND TECHNOLOGY | | DATE: 3-31-65 |
| TEST: INITIAL MEAS. - D.C. PARAMETER CHARACTERISTICS | SAMPLE NUMBER: NOTED | BAROM. PRESS. IN. HG. |
| PART NAME & NUMBER: DTL NAND/NOR GATE - SC736 | TEST MEDIUM: AIR | WET BULB TEMP.: 61°F |
| MANUFACTURER: B | TEST TEMP.: 74° C. ☐ F. ☒ | DRY BULB TEMP.: 74°F |
| ENGINEER | TECHNICIAN: F. Hackman | INSPECTOR |
| REF. SPEC. | | DATA SHEET NUMBER |

JOB NUMBER AO-138-AE PAGE OF TEST REPORT NO. TR1-1188

601-2
1/64

GENERAL PRECISION, INC.
LIBRASCOPE GROUP

# ENVIRONMENTAL LABORATORY DATA SHEET

TEST CONDITIONS:
IF RETEST CHECK ☐

GROUP II

| SAMPLE NUMBER | $BV_7$ VOLTS | $BV_8$ VOLTS | $BV_9$ VOLTS | $BV_{CBO}$ VOLTS |
|---|---|---|---|---|
| 6 | 30.8 | 30.2 | 30.9 | 31.0 |
| 7 | 31.9 | 31.9 | 31.9 | 27.8 |
| 8 | 29.7 | 29.6 | 29.6 | 14.3 |
| 9 | 28.5 | 28.0 | 28.3 | 27.9 |
| 10 | 29.6 | 29.6 | 29.9 | 10.7 |
| 11 | 30.2 | 30.4 | 30.0 | 16.0 |
| 12 | 29.1 | 29.2 | 29.3 | 23.7 |
| 13 | 29.0 | 30.3 | 30.2 | 27.6 |
| 14 | 30.6 | 30.2 | 30.6 | 22.8 |
| 15 | 30.6 | 30.8 | 30.8 | 13.7 |
| 16 | 30.3 | 30.9 | 30.9 | 29.4 |
| 17 | 30.6 | 31.5 | 31.0 | 29.1 |
| 18 | 29.6 | 29.9 | 29.3 | 24.0 |
| 19 | 27.1 | 27.3 | 28.3 | 27.9 |
| 20 | 28.3 | 27.6 | 28.2 | 27.6 |
| 21 | 30.9 | 31.0 | 31.0 | 30.5 |
| 22 | 28.7 | 29.6 | 30.1 | 29.6 |
| 23 | 29.2 | 29.1 | 29.3 | 17.8 |
| 24 | 28.2 | 28.5 | 28.4 | 13.2 |
| 25 | 30.7 | 30.8 | 30.8 | 30.0 |

| | | | |
|---|---|---|---|
| TEST CONDUCTED FOR: NASA, OFFICE OF ADVANCED RESEARCH AND TECHNOLOGY | | | DATE: 3-31-65 |
| TEST: INITIAL MEAS. - D.C. PARAMETER CHARACTERISTICS | SAMPLE NUMBER: NOTED | | BAROM. PRESS. IN. HG. |
| PART NAME & NUMBER: DTL NAND/NOR GATE - SC736 | TEST MEDIUM: AIR | | WET BULB TEMP.: 61°F |
| MANUFACTURER: B | TEST TEMP.: 74° C. ☐ F. ☒ | | DRY BULB TEMP.: 74°F |
| ENGINEER | TECHNICIAN: TE Hardin | INSPECTOR | |
| REF. SPEC. | | DATA SHEET NUMBER | |

JOB NUMBER A0-138-AE PAGE OF TEST REPORT NO. TR1-1188

601-2
1/64

GENERAL PRECISION, INC.
LIBRASCOPE GROUP

# ENVIRONMENTAL LABORATORY DATA SHEET

TEST CONDITIONS:
IF RETEST CHECK ☐

GROUP II

| SAMPLE NUMBER | $BV_7$ VOLTS | $BV_8$ VOLTS | $BV_9$ VOLTS | $BV_{CBO}$ VOLTS |
|---|---|---|---|---|
| 26 | 30.6 | 30.9 | 31.6 | 31.1 |
| 27 | 31.1 | 31.1 | 31.1 | 27.2 |
| 28 | 30.0 | 30.2 | 30.5 | 30.0 |
| 29 | 31.9 | 31.7 | 31.4 | 24.7 |
| 30 | 31.3 | 31.3 | 31.3 | 31.0 |
| 31 | 28.9 | 28.7 | 28.7 | 28.9 |
| 32 | 27.6 | 27.6 | 28.6 | 20.8 |
| 33 | 30.0 | 29.5 | 29.1 | 20.5 |
| 34 | 29.4 | 28.8 | 29.4 | 18.5 |
| 35 | 30.8 | 30.3 | 31.6 | 29.9 |
| 36 | 29.7 | 29.4 | 29.1 | 17.4 |
| 37 | 29.2 | 28.5 | 28.4 | 27.5 |
| 38 | 28.9 | 29.6 | 29.8 | 26.4 |
| 39 | 28.2 | 28.2 | 28.3 | 28.9 |
| 40 | 28.2 | 28.7 | 28.8 | 23.3 |
| 41 | 28.8 | 29.0 | 29.0 | 17.2 |
| 42 | 29.7 | 30.3 | 30.2 | 30.4 |
| 43 | 30.5 | 30.3 | 30.6 | 17.0 |
| 44 | 31.1 | 31.1 | 30.7 | 29.8 |
| 45 | 30.0 | 30.3 | 16.2 | 15.4 |

| | | |
|---|---|---|
| TEST CONDUCTED FOR: NASA, OFFICE OF ADVANCED RESEARCH AND TECHNOLOGY | | DATE: 3-3-65 |
| TEST: INITIAL MEAS. - D.C. PARAMETER CHARACTERISTICS | SAMPLE NUMBER: NOTED | BAROM. PRESS. IN. HG. |
| PART NAME & NUMBER: DTL NAND/NOR GATE - SC736 | TEST MEDIUM: AIR | WET BULB TEMP. 61 °F |
| MANUFACTURER: B | TEST TEMP. 74° C. ☐ F. ☒ | DRY BULB TEMP. 74 °F |
| ENGINEER | TECHNICIAN: F.E. Wackers | INSPECTOR |
| REF. SPEC. | | DATA SHEET NUMBER |

JOB NUMBER A0-138-AE PAGE OF TEST REPORT NO. TR1-1188

601-2
1/64

GENERAL PRECISION, INC.
LIBRASCOPE GROUP

# ENVIRONMENTAL LABORATORY DATA SHEET

TEST CONDITIONS:
IF RETEST CHECK ☐

| SAMPLE NUMBER | $BV_7$ | $BV_8$ | $BV_9$ | $BV_{CBO}$ | | |
|---|---|---|---|---|---|---|
| 46 | 29.2 | 31.1 | 31.4 | 30.0 | | |
| 47 | 29.9 | 29.3 | 29.0 | 27.8 | | |
| 48 | 30.9 | 30.2 | 30.5 | 23.0 | | |
| 49 | 28.8 | 29.8 | 29.9 | 29.5 | | |
| 50 | 30.3 | 30.7 | 30.9 | 15.8 | | |
| 51 | 31.8 | 31.6 | 31.6 | 31.0 | | |
| 52 | 29.4 | 30.0 | 30.6 | 30.0 | | |
| 53 | 29.2 | 30.5 | 30.4 | 30.4 | | |
| 54 | 29.9 | 29.7 | 29.6 | 28.8 | | |
| 55 | 28.8 | 28.6 | 28.7 | 28.0 | | |
| 56 | 29.4 | 29.1 | 29.4 | 29.3 | | |
| 57 | 31.2 | 30.7 | 31.7 | 31.1 | | |
| 58 | 28.6 | 28.4 | 28.6 | 13.5 | | |
| 59 | 31.3 | 31.1 | 31.1 | 30.4 | | |
| 60 | 30.9 | 30.7 | 30.0 | 13.9 | | |
| 61 | 30.8 | 30.9 | 29.9 | 28.8 | | |
| 62 | 30.6 | 30.3 | 30.1 | 28.9 | | |
| 63 | 11.5 | 31.9 | 31.4 | 19.9 | | |
| 64 | 30.5 | 30.4 | 30.8 | 30.7 | | |
| 65 | 11.5 | 28.0 | 28.2 | 22.5 | | |
| | | | | | | |
| CALIBRATION: | | START | | | COMPLETION | |
| | | 20 MEG | 20.00 | | 20 MEG | 20.00 |
| | | 10 MEG | 10.00 | | 10 MEG | 10.00 |
| | | 5 MEG | 5.01 | | 5 MEG | 5.01 |

| | | |
|---|---|---|
| TEST CONDUCTED FOR: NASA, OFFICE OF ADVANCED RESEARCH AND TECHNOLOGY | | DATE: 3-31-65 |
| TEST: INITIAL MEAS.-DC PARAMETER CHARACTERISTICS | SAMPLE NUMBER: NOTED | BAROM. PRESS. IN. HG. |
| PART NAME & NUMBER: DTL NAND/NOR GATE-SC736 | TEST MEDIUM: AIR | WET BULB TEMP.: 61°F |
| MANUFACTURER: B | TEST TEMP.: 75° C. ☐ F. ☒ | DRY BULB TEMP.: 75°F |
| ENGINEER | TECHNICIAN: T. Hookin | INSPECTOR |
| REF. SPEC. | | DATA SHEET NUMBER |

JOB NUMBER A0-138-AE PAGE OF TEST REPORT NO. TR1-1188

601-2
1/64

GENERAL PRECISION, INC
LIBRASCOPE GROUP

# ENVIRONMENTAL LABORATORY DATA SHEET

GROUP I - INSTRUMENTATION CONTROL

CALIBRATION CHECK - BREAKDOWN VOLTAGE AT 1UA

| CALIBRATION RESISTOR | VOLTAGE - FULL SCALE = 100 VOLTS | | | |
|---|---|---|---|---|
| 20 MEG | 1998 ' | 1998 ' | 1998 ' | 1999 ' |
| 10 MEG | 0997 ' | 0998 ' | 0997 ' | 0998 ' |
| 5 MEG | 0499 ' | 0499 ' | 0499 ' | 0499 ' |

| SAMPLE NUMBER | VOLTAGE - FULL SCALE = 100 VOLTS | | | |
|---|---|---|---|---|
| | BV7 | BV8 | BV9 | BVCBO |
| 1 | 2687 ' | 2679 ' | 2687 ' | 2263 ' |
| 2 | 2530 ' | 2514 ' | 2508 ' | 1911 ' |
| 3 | 2603 ' | 2640 ' | 2648 ' | 2539 ' |
| 4 | 2713 ' | 2695 ' | 2709 ' | 2648 ' |
| 5' | 2449 ' | 2454 ' | 2437 ' | 1997 ' |

| | | | |
|---|---|---|---|
| TEST CONDUCTED FOR: NASA OFFICE OF ADVANCED RESEARCH AND DEVELOPMENT | | | DATE: 31 MAR 1965 |
| TEST: INITIAL MEAS. - DC. PARAMETER CHARACTERISTICS | SAMPLE NUMBER: NOTED | | BAROM PRESS: IN. HG |
| PART NAME & NUMBER: DTL NAND/NOR GATE - SE736 | TEST MEDIUM: AIR | | WET BULB TEMP: 60°F |
| MANUFACTURER: B | TEST TEMP.: 72° C. ☐ F. ☒ | | DRY BULB TEMP.: 72°F |
| ENGINEER | TECHNICIAN: F. Hayes | INSPECTOR | |
| REF. SPEC. | | DATA SHEET NUMBER | |

JOB NUMBER AO-138-AE PAGE OF TEST REPORT NO. TR1-1188

ELI-2
1/64

GENERAL PRECISION INC
LIBRASCOPE GROUP

# ENVIRONMENTAL LABORATORY DATA SHEET

GROUP IV - TEMP STEP STRESS GROUP

| SAMPLE NUMBER | VOLTAGE - FULL SCALE = 100 VOLTS BV7 | BV8 | BV9 | BVCBO |
|---|---|---|---|---|
| 66 | 3062 ' | 3144 ' | 3162 ' | 3060 ' |
| 67 | 2989 ' | 2994 ' | 3027 ' | 3021 ' |
| 68 | 3044 ' | 3002 ' | 2962 ' | 2965 ' |
| 69 | 3027 ' | 3058 ' | 3055 ' | 2748 ' |
| 70 | 3027 ' | 3019 ' | 3027 ' | 2960 ' |
| 71 | 2800 ' | 2751 ' | 2767 ' | 2487 ' |
| 72 | 2845 ' | 2840 ' | 2834 ' | 2794 ' |
| 73 | 3037 ' | 3048 ' | 3038 ' | 3007 ' |
| 74 | 2968 ' | 2960 ' | 2941 ' | 1176 ' |
| 75 | 3122 ' | 3121 ' | 0885 ' | 3003 ' |
| 76 | [illegible] ' | 2979 ' | 2917 ' | 1719 ' |
| 77 | 2994 ' | 3006 ' | 2998 ' | 1984 ' |
| 78 | 2819 ' | 2824 ' | 2838 ' | 2789 ' |
| 79 | 3017 ' | 2999 ' | 3027 ' | 2988 ' |
| 80 | 2975 ' | 2990 ' | 3013 ' | 2967 ' |

| | | | |
|---|---|---|---|
| TEST CONDUCTED FOR: NASA OFFICE OF ADVANCED RESEARCH AND TECHNOLOGY | | | DATE: 31 MAR 1965 |
| TEST: INITIAL MEASUREMENTS — D.C. PARAMETER CHARACTERISTICS | SAMPLE NUMBER: NOTED | | BAROM. PRESS: IN. HG |
| PART NAME & NUMBER: DTL NAND/NOR GATE — SC736 | TEST MEDIUM: AIR | | WET BULB TEMP: 60°F |
| MANUFACTURER: B | TEST TEMP.: 72° C. ☐ F. ☒ | | DRY BULB TEMP.: 72°F |
| ENGINEER | TECHNICIAN: L. Hayn | INSPECTOR | |
| REF. SPEC. | | DATA SHEET NUMBER | |

JOB NUMBER Ao-138-AE PAGE OF TEST REPORT NO. TR1-1188

601-2
1/64

GENERAL PRECISION, INC
LIBRASCOPE GROUP

# ENVIRONMENTAL LABORATORY DATA SHEET

GROUP IV - TEMP STEP STRESS GROUP

| SAMPLE NUMBER | BV7 | VOLTAGE - FULL SCALE = 100 VOLTS BV8 | BV9 | BVCBO |
|---|---|---|---|---|
| 81 | 2654 ' | 2674 ' | 2614 ' | 2607 ' |
| 82 | 2886 ' | 2838 ' | 2878 ' | 2841 ' |
| 83 | 2838 ' | 2864 ' | 2886 ' | 1909 ' |
| 84 | 3130 ' | 3155 ' | 3165 ' | 3126 ' |
| 85 | 2990 ' | 3057 ' | 2959 ' | 2897 ' |
| 86 | 3047 ' | 3039 ' | 3005 ' | 2959 ' |
| 87 | 2936 ' | 2946 ' | 2949 ' | 2613 ' |
| 88 | 3026 ' | 3032 ' | 3136 ' | 3096 ' |
| 89 | 2937 ' | 2937 ' | 2926 ' | 2676 ' |
| 90 | 3028 ' | 3054 ' | 3076 ' | 2266 ' |
| 91 | 2859 ' | 2899 ' | 2918 ' | 2872 ' |
| 92 | 2854 ' | 2864 ' | 2899 ' | 2863 ' |
| 93 | 2971 ' | 2968 ' | 3021 ' | 3036 ' |
| 94 | 2917 ' | 2962 ' | 2963 ' | 2988 ' |
| 95 | 3068 ' | 3126 ' | 3137 ' | 2618 ' |
| 96 | 2836 ' | 2804 ' | 2779 ' | 2663 ' |
| 97 | 2884 ' | 2862 ' | 2871 ' | 2859 ' |
| 98 | 2989 ' | 3020 ' | 3017 ' | 1033 ' |
| 99 | 2938 ' | 2927 ' | 2949 ' | 2901 ' |
| 100' | 2950 ' | 2959 ' | 2965 ' | 2445 ' |

| | | |
|---|---|---|
| TEST CONDUCTED FOR: NASA OFFICE OF ADVANCED RESEARCH AND TECHNOLOGY | | DATE: 31 MAR 1965 |
| TEST: INITIAL MEAS. - D.C. PARAMATER CHARACTERISTICS | SAMPLE NUMBER: NOTED | BAROM. PRESS: IN. HG |
| PART NAME & NUMBER: DTL NAND/NOR GATE — SC 736 | TEST MEDIUM: AIR | WET BULB TEMP: 61 °F |
| MANUFACTURER: B | TEST TEMP.: 72 ° C. ☐ F. ☒ | DRY BULB TEMP.: 72 °F |
| ENGINEER | TECHNICIAN: L. Hayes | INSPECTOR |
| REF. SPEC. | | DATA SHEET NUMBER |

JOB NUMBER AO-132-AE PAGE OF TEST REPORT NO. TR1-1188

621-8

GENERAL PRECISION, INC
LIBRASCOPE GROUP

# ENVIRONMENTAL LABORATORY DATA SHEET

GROUP IV - TEMP STEP STRESS GROUP

VOLTAGE - FULL SCALE = 100 VOLTS

| SAMPLE NUMBER | BV7 | BV8 | BV9 | BVCBO |
|---|---|---|---|---|
| 101 | 2973 ' | 3021 ' | 3058 ' | 3079 ' |
| 102 | 3147 ' | 3148 ' | 3155 ' | 2776 ' |
| 103 | 3130 ' | 3068 ' | 3107 ' | 2961 ' |
| 104 | 2891 ' | 2958 ' | 3025 ' | 1602 ' |
| 105 | 3028 ' | 3047 ' | 3011 ' | 3048 ' |
| 106 | 3088 ' | 3099 ' | 3119 ' | 2154 ' |
| 107 | 2809 ' | 2785 ' | 2695 ' | 1252 ' |
| 108 | 2942 ' | 2942 ' | 2916 ' | 1814 ' |
| 109 | 2918 ' | 2988 ' | 2976 ' | 2096 ' |
| 110 | 2954 ' | 2965 ' | 3007 ' | 1757 ' |
| 111 | 3139 ' | 3163 ' | 3149 ' | 2809 ' |
| 112 | 2840 ' | 2832 ' | 2855 ' | 2859 ' |
| 113 | 2979 ' | 2969 ' | 2899 ' | 1806 ' |
| 114 | 3061 ' | 3116 ' | 3118 ' | 2787 ' |
| 115 | 3089 ' | 3077 ' | 3178 ' | 2917 ' |

CALIBRATION CHECK

| PROGRAM RESISTOR | VOLTAGE - FULL SCALE = 100 VOLTS | | | |
|---|---|---|---|---|
| 20 MEG | 1998 ' | 1998 ' | 1998 ' | 1998 ' |
| 10 MEG | 0998 ' | 0998 ' | 0999 ' | 0998 ' |
| 5 MEG' | 0499 ' | 0500 ' | 0499 ' | 0499 ' |

| | | |
|---|---|---|
| TEST CONDUCTED FOR: NASA OFFICE OF ADVANCED RESEARCH AND TECHNOLOGY | | DATE: 31 MAR 1965 |
| TEST: INITIAL MEAS. — D.C. PARAMETER CHARACTERISTICS | SAMPLE NUMBER: NOTED | BAROM. PRESS: IN. HG. |
| PART NAME & NUMBER: DTL NAND/NOR GATE — SC 736 | TEST MEDIUM: AIR | WET BULB TEMP: 62°F |
| MANUFACTURER: B | TEST TEMP.: 72° C. F. | DRY BULB TEMP.: 72°F |
| ENGINEER | TECHNICIAN: L. Hayn | INSPECTOR |
| REF. SPEC. | | DATA SHEET NUMBER |

JOB NUMBER AO-138-AE PAGE OF TEST REPORT NO. TR1-1188

6211-2
1/64

GENERAL PRECISION, INC.
LIBRASCOPE GROUP

# ENVIRONMENTAL LABORATORY DATA SHEET

$I_R$ @ 4V

TEST CONDITIONS:
IF RETEST CHECK ☐ READINGS IN NANOAMPS

GROUP I

| # | $I_7$ | $I_8$ | $I_9$ | $I_{CBO}$ | $I_3$ | | | |
|---|---|---|---|---|---|---|---|---|
| 1 | 5.6 | 5.6 | 5.7 | 9.4 | 10.0 | | | |
| 2 | 7.6 | 7.6 | 7.5 | 13.2 | 14.5 | | | |
| 3 | 9.9 | 9.6 | 9.4 | 19.1 | 22.1 | | | |
| 4 | 4.6 | 4.7 | 4.6 | 7.9 | 8.5 | | | |
| 5 | 13.8 | 15.0 | 14.7 | 1268 | 14.2 | | | |
| | | | | | | | | |
| | | CALIBRATION | | WITH | 10 MEGOHMS | | | |
| | | | 1.0V | 100.0 | NA | | | |
| | | | 0.5V | 49.9 | NA | | | |

| | | |
|---|---|---|
| TEST CONDUCTED FOR: NASA OFFICE OF ADVANCED RESEARCH AND TECHNOLOGY | | DATE: 4-2-65 |
| TEST: INITIAL MEAS. - D.C. PARAMETER CHARACTERISTICS | SAMPLE NUMBER: NOTED | BAROM. PRESS. IN. HG. |
| PART NAME & NUMBER: DTL NAND/NOR GATE - SC736 | TEST MEDIUM: AIR | WET BULB TEMP.: 64°F |
| MANUFACTURER: B | TEST TEMP.: 77° C. ☐ F. ☒ | DRY BULB TEMP.: 77°F |
| ENGINEER: | TECHNICIAN: S. Hayn | INSPECTOR: |
| REF. SPEC.: | | DATA SHEET NUMBER: |

JOB NUMBER AO-138-AE PAGE OF TEST REPORT NO. TR1-1188

601-2
1/64

GENERAL PRECISION, INC.
LIBRASCOPE GROUP

# ENVIRONMENTAL LABORATORY DATA SHEET

$I_R$ @ 4V

GROUP II

TEST CONDITIONS:
IF RETEST CHECK ☐

READINGS IN NANOAMPS

| # | $I_7$ | $I_8$ | $I_9$ | $I_{CBO}$ | $I_3$ | | | |
|---|---|---|---|---|---|---|---|---|
| 6 | 4.1 | 4.2 | 4.0 | 7.2 | 7.5 | | | |
| 7 | 4.2 | 3.9 | 3.9 | 6.6 | 6.8 | | | |
| 8 | 3.3 | 3.2 | 3.2 | 5.9 | 6.1 | | | |
| 9 | 3.5 | 23.0 | 3.4 | 6.4 | 6.4 | | | |
| 10 | 3.4 | 3.4 | 3.5 | 6.2 | 6.4 | | | |
| 11 | 3.6 | 3.6 | 3.6 | 7.0 | 7.2 | | | |
| 12 | 3.4 | 3.3 | 3.4 | 5.9 | 6.1 | | | |
| 13 | 3.5 | 3.5 | 3.5 | 6.7 | 7.0 | | | |
| 14 | 3.8 | 3.9 | 3.8 | 6.7 | 7.0 | | | |
| 15 | 4.0 | 3.9 | 3.8 | 6.5 | 6.7 | | | |
| 16 | 4.8 | 4.8 | 5.0 | 9.1 | 9.3 | | | |
| 17 | 4.1 | 4.1 | 4.1 | 7.1 | 7.3 | | | |
| 18 | 3.8 | 3.8 | 3.9 | 6.8 | 7.1 | | | |
| 19 | 2.3 | 2.2 | 2.3 | 4.2 | 4.8 | | | |
| 20 | 5.3 | 4.3 | 3.8 | 6.7 | 6.8 | | | |
| 21 | 3.3 | 3.3 | 3.3 | 5.9 | 6.1 | | | |
| 22 | 3.7 | 3.6 | 3.6 | 6.4 | 6.6 | | | |
| 23 | 3.3 | 3.4 | 3.3 | 6.3 | 6.6 | | | |
| 24 | 3.2 | 3.1 | 3.2 | 5.8 | 6.0 | | | |
| 25 | 3.5 | 3.5 | 3.5 | 6.3 | 6.4 | | | |
| | | | | | | | | |
| | | CALIBRATION | WITH | 10 MEGOHMS | | | | |
| | | | 1.0V | 99.9 | NA | | | |
| | | | 0.5V | 49.9 | NA | | | |
| | | | | | | | | |
| | | | | | | | | |

| | | |
|---|---|---|
| TEST CONDUCTED FOR: NASA, OFFICE OF ADVANCED RESEARCH AND TECHNOLOGY | | DATE: 4-2-65 |
| TEST: INITIAL MEAS - D.C. PARAMETER CHARACTERISTICS | SAMPLE NUMBER: NOTED | BAROM. PRESS. IN. HG. |
| PART NAME & NUMBER: DTL NAND/NOR GATE - SC 736 | TEST MEDIUM: AIR | WET BULB TEMP. 64°F |
| MANUFACTURER: B | TEST TEMP. 77° C. ☐ F. ☒ | DRY BULB TEMP. 77°F |
| ENGINEER / TECHNICIAN: S. Hayn | INSPECTOR | |
| REF. SPEC. | DATA SHEET NUMBER | |

JOB NUMBER A0-138-AE PAGE OF TEST REPORT NO. TR1-1188

601-2
1/64

GENERAL PRECISION, INC.
LIBRASCOPE GROUP

# ENVIRONMENTAL LABORATORY DATA SHEET

$I_R$ @ 4V

GROUP II

TEST CONDITIONS:
IF RETEST CHECK ☐ READINGS IN NANOAMPS

| # | $I_7$ | $I_8$ | $I_9$ | $I_{CBO}$ | $I_3$ | | | |
|---|---|---|---|---|---|---|---|---|
| 26 | 4.1 | 4.0 | 3.9 | 7.0 | 7.4 | | | |
| 27 | 4.2 | 4.2 | 4.2 | 6.7 | 7.1 | | | |
| 28 | 3.8 | 3.7 | 3.7 | 6.7 | 6.9 | | | |
| 29 | 3.9 | 4.0 | 4.0 | 6.8 | 7.0 | | | |
| 30 | 2.3 | 2.2 | 2.1 | 4.1 | 5.0 | | | |
| 31 | 1.9 | 1.8 | 1.8 | 3.6 | 4.4 | | | |
| 32 | 3.7 | 3.6 | 3.5 | 6.6 | 6.8 | | | |
| 33 | 4.6 | 4.0 | 3.8 | 6.8 | 7.1 | | | |
| 34 | 3.6 | 3.6 | 3.6 | 6.6 | 6.6 | | | |
| 35 | 3.6 | 3.5 | 3.4 | 6.3 | 6.6 | | | |
| 36 | 3.3 | 3.3 | 3.4 | 6.1 | 6.2 | | | |
| 37 | 3.7 | 3.3 | 3.3 | 6.1 | 6.3 | | | |
| 38 | 3.4 | 3.3 | 3.3 | 6.2 | 6.2 | | | |
| 39 | 1.6 | 1.6 | 1.6 | 3.8 | 4.4 | | | |
| 40 | 3.8 | 3.7 | 3.6 | 7.1 | 7.3 | | | |
| 41 | 3.5 | 3.5 | 3.5 | 6.9 | 7.1 | | | |
| 42 | 3.8 | 3.7 | 3.7 | 6.5 | 6.7 | | | |
| 43 | 3.5 | 3.3 | 3.5 | 6.3 | 11.0 | | | |
| 44 | 3.6 | 3.6 | 3.6 | 6.3 | 6.4 | | | |
| 45 | 3.5 | 3.6 | 3.6 | 6.4 | 6.6 | | | |
| | | | | | | | | |
| | | CALIBRATION | WITH | 10 MEGOHMS | | | | |
| | | | 1.0 V | 99.9 | NA | | | |
| | | | 0.5V | 49.9 | NA | | | |
| | | | | | | | | |
| | | | | | | | | |

| | | |
|---|---|---|
| TEST CONDUCTED FOR: NASA, OFFICE OF ADVANCED RESEARCH AND TECHNOLOGY | | DATE 4-2-65 |
| TEST: INITIAL MEAS - D.C. PARAMETER CHARACTERISTICS | SAMPLE NUMBER NOTED | BAROM. PRESS. IN. HG. |
| PART NAME & NUMBER: DTL NAND/NOR GATE - SC 736 | TEST MEDIUM AIR | WET BULB TEMP. 64°F |
| MANUFACTURER: B | TEST TEMP. 77° C. ☐ F. ☒ | DRY BULB TEMP. 77°F |
| ENGINEER | TECHNICIAN L. Hayn | INSPECTOR |
| REF. SPEC. | | DATA SHEET NUMBER |

JOB NUMBER A0-138-AE PAGE OF TEST REPORT NO. TR1-1188

601-2
1/64

GENERAL PRECISION, INC.
LIBRASCOPE GROUP

# ENVIRONMENTAL LABORATORY DATA SHEET

$I_R$ @ 4V

GROUP I

TEST CONDITIONS:
IF RETEST CHECK ☐ READINGS IN NANOAMPS

| # | $I_7$ | $I_8$ | $I_9$ | $I_{CBO}$ | $I_5$ | | | |
|---|---|---|---|---|---|---|---|---|
| 1 | 5.8 | 5.8 | 5.9 | 10.2 | 11.1 | | | |
| 2 | 7.5 | 7.5 | 7.4 | 13.0 | 14.4 | | | |
| 3 | 9.7 | 9.4 | 9.1 | 18.8 | 21.7 | | | |
| 4 | 4.5 | 4.6 | 4.5 | 7.8 | 8.6 | | | |
| 5 | 14.2 | 15.5 | 15.5 | 138.6 | 143.2 | | | |

CALIBRATION WITH 10 MEGOHMS

| | | |
|---|---|---|
| TEST CONDUCTED FOR: NASA, OFFICE OF ADVANCED RESEARCH AND TECHNOLOGY | | DATE: 4-2-65 |
| TEST: INITIAL MEAS-DC PARAMETER CHARACTERISTICS | SAMPLE NUMBER: NOTED | BAROM. PRESS. IN. HG. |
| PART NAME & NUMBER: DTL NAND/NOR GATE - SC 736 | TEST MEDIUM: AIR | WET BULB TEMP.: 64°F |
| MANUFACTURER: B | TEST TEMP.: 77° C. ☐ F. ☒ | DRY BULB TEMP.: 77°F |
| ENGINEER | TECHNICIAN: S. Hayn | INSPECTOR |
| REF. SPEC. | | DATA SHEET NUMBER |

JOB NUMBER A0-138-AE PAGE OF TEST REPORT NO. TR1-1188

601-2
1/64

GENERAL PRECISION, INC.
LIBRASCOPE GROUP

# ENVIRONMENTAL LABORATORY DATA SHEET

$I_R$ @ 4V

GROUP III

TEST CONDITIONS:
IF RETEST CHECK ☐ READINGS IN NANOAMPS

| # | $I_7$ | $I_8$ | $I_9$ | $I_{CBO}$ | $I_3$ | | | |
|---|---|---|---|---|---|---|---|---|
| 46 | 4.9 | 4.7 | 4.7 | 8.5 | 8.7 | | | |
| 47 | 3.4 | 3.5 | 3.5 | 6.2 | 6.3 | | | |
| 48 | 3.5 | 3.4 | 3.4 | 6.3 | 6.5 | | | |
| 49 | 3.4 | 3.3 | 3.4 | 6.2 | 6.4 | | | |
| 50 | 3.6 | 3.5 | 3.3 | 6.3 | 6.5 | | | |
| 51 | 3.5 | 3.4 | 3.4 | 6.3 | 6.4 | | | |
| 52 | 3.4 | 3.2 | 3.3 | 6.2 | 6.4 | | | |
| 53 | 3.5 | 3.4 | 3.5 | 6.5 | 6.6 | | | |
| 54 | 3.7 | 3.2 | 3.2 | 6.1 | 6.3 | | | |
| 55 | 3.5 | 3.9 | 3.5 | 6.5 | 6.6 | | | |
| 56 | 1.9 | 1.9 | 1.9 | 4.0 | 4.6 | | | |
| 57 | 4.6 | 4.3 | 4.7 | 8.9 | 9.2 | | | |
| 58 | 3.3 | 3.2 | 3.2 | 5.7 | 5.9 | | | |
| 59 | 3.6 | 3.6 | 3.6 | 6.3 | 6.4 | | | |
| 60 | 4.4 | 4.3 | 4.5 | 7.7 | 8.0 | | | |
| 61 | 3.9 | 3.7 | 3.7 | 6.7 | 6.9 | | | |
| 62 | 3.9 | 3.6 | 3.5 | 6.4 | 6.6 | | | |
| 63 | 4.0 | 3.8 | 3.8 | 6.8 | 7.1 | | | |
| 64 | 2.0 | 1.8 | 1.8 | 4.0 | 4.5 | | | |
| 65 | 3.0 | 3.0 | 3.0 | 5.4 | 5.6 | | | |
| | | | | | | | | |
| | | CALIBRATION | WITH | 10 MEGOHMS | | | | |
| | | | 1.0V | 99.8 | NA | | | |
| | | | 0.5V | 49.7 | NA | | | |
| | | | | | | | | |
| | | | | | | | | |

| | | |
|---|---|---|
| TEST CONDUCTED FOR: NASA, OFFICE OF ADVANCED RESEARCH AND TECHNOLOGY | | DATE: 4-2-65 |
| TEST: INITIAL MEAS-D.C. PARAMETER CHARACTERISTICS | SAMPLE NUMBER: NOTED | BAROM. PRESS. IN. HG. |
| PART NAME & NUMBER: DTL NAND/NOR GATE - SC 736 | TEST MEDIUM: AIR | WET BULB TEMP.: 64°F |
| MANUFACTURER: B | TEST TEMP.: 77° C. ☐ F. ☒ | DRY BULB TEMP.: 77°F |
| ENGINEER | TECHNICIAN: L. Hayn | INSPECTOR |
| REF. SPEC. | | DATA SHEET NUMBER |

JOB NUMBER A0-138-AE PAGE OF TEST REPORT NO. TR1-1188

601-2
1/64

GENERAL PRECISION, INC.
LIBRASCOPE GROUP

# ENVIRONMENTAL LABORATORY DATA SHEET

$I_R$ @ 4V

GROUP I

TEST CONDITIONS:
IF RETEST CHECK ☐

READING IN NANOAMPS

| # | $I_7$ | $I_8$ | $I_9$ | $I_{CBO}$ | $I_3$ | | | |
|---|---|---|---|---|---|---|---|---|
| 1 | 6.0 | 6.1 | 6.1 | 10.3 | 10.9 | | | |
| 2 | 7.4 | 7.4 | 7.4 | 13.2 | 14.6 | | | |
| 3 | 9.7 | 9.5 | 9.2 | 19.2 | 22.7 | | | |
| 4 | 4.7 | 4.8 | 4.6 | 8.0 | 8.5 | | | |
| 5 | 14.1 | 15.4 | 15.3 | 136.2 | 139.1 | | | |
| | | | | | | | | |
| | | CALIBRATION | | WITH | 10 MEGOHMS | | | |
| | | | 1.0V | 99.8 | NA | | | |
| | | | 0.5V | 49.7 | NA | | | |

| | | |
|---|---|---|
| TEST CONDUCTED FOR: NASA, OFFICE OF ADVANCED RESEARCH AND TECHNOLOGY | | DATE: 4-2-65 |
| TEST: INITIAL MEAS.-D.C. PARAMETER CHARACTERISTICS | SAMPLE NUMBER: NOTED | BAROM. PRESS. IN. HG. |
| PART NAME & NUMBER: DTL NAND/NOR GATE - SC736 | TEST MEDIUM: AIR | WET BULB TEMP.: 64°F |
| MANUFACTURER: B | TEST TEMP.: 77° C. ☐ F. ☒ | DRY BULB TEMP.: 77°F |
| ENGINEER | TECHNICIAN: S. Hayn | INSPECTOR |
| REF. SPEC. | | DATA SHEET NUMBER |

JOB NUMBER A0-138-AE PAGE OF TEST REPORT NO. TR1-1188

601-2
1/64

GENERAL PRECISION, INC.
LIBRASCOPE GROUP

# ENVIRONMENTAL LABORATORY DATA SHEET

$I_R$ @ 4V

GROUP IV

TEST CONDITIONS:
IF RETEST CHECK ☐ READINGS IN NANOAMPS

| # | $I_7$ | $I_8$ | $I_9$ | $I_{CBO}$ | $I_3$ | | | |
|---|---|---|---|---|---|---|---|---|
| 66 | 4.3 | 3.9 | 4.1 | 7.0 | 7.2 | | | |
| 67 | 1.8 | 1.7 | 1.7 | 3.5 | 4.3 | | | |
| 68 | 3.6 | 3.5 | 3.8 | 6.9 | 7.1 | | | |
| 69 | 3.3 | 3.2 | 3.2 | 6.0 | 6.2 | | | |
| 70 | 3.4 | 3.2 | 3.2 | 5.8 | 6.0 | | | |
| 71 | 3.2 | 3.2 | 3.2 | 7.4 | 11.1 | | | |
| 72 | 3.4 | 3.5 | 3.2 | 6.1 | 6.2 | | | |
| 73 | 1.7 | 1.7 | 1.7 | 3.6 | 4.4 | | | |
| 74 | 3.4 | 3.3 | 3.3 | 5.9 | 6.1 | | | |
| 75 | 3.5 | 3.5 | 3.3 | 6.7 | 6.8 | | | |
| 76 | 3.2 | 3.1 | 3.1 | 5.7 | 5.8 | | | |
| 77 | 3.0 | 3.1 | 3.2 | 6.1 | 6.4 | | | |
| 78 | 1.8 | 1.8 | 1.7 | 4.2 | 5.0 | | | |
| 79 | 1.8 | 1.8 | 1.8 | 3.6 | 4.4 | | | |
| 80 | 1.7 | 1.7 | 1.7 | 3.8 | 4.4 | | | |
| 81 | 3.5 | 3.4 | 3.5 | 6.5 | 6.6 | | | |
| 82 | 1.7 | 1.7 | 1.7 | 3.7 | 4.4 | | | |
| 83 | 2.8 | 2.9 | 2.8 | 5.5 | 5.7 | | | |
| 84 | 3.3 | 3.2 | 3.3 | 6.2 | 6.4 | | | |
| 85 | 3.2 | 3.2 | 3.3 | 6.0 | 6.2 | | | |
| | | | | | | | | |
| | | CALIBRATION | WITH | 10 MEGOHMS | | | | |
| | | | 1.0 V | 99.7 | NA | | | |
| | | | 0.5 V | 49.7 | NA | | | |
| | | | | | | | | |
| | | | | | | | | |

| | | |
|---|---|---|
| TEST CONDUCTED FOR: NASA, OFFICE OF ADVANCED RESEARCH AND TECHNOLOGY | | DATE: 4-2-65 |
| TEST: INITIAL MEAS.-D.C. PARAMETER CHARACTERISTICS | SAMPLE NUMBER: NOTED | BAROM. PRESS. IN. HG. |
| PART NAME & NUMBER: DTL NAND/NOR GATE - SC 736 | TEST MEDIUM: AIR | WET BULB TEMP. 64°F |
| MANUFACTURER: B | TEST TEMP. 77° C. ☐ F. ☒ | DRY BULB TEMP. 77°F |
| ENGINEER | TECHNICIAN: S. Hayn | INSPECTOR |
| REF. SPEC. | | DATA SHEET NUMBER |

JOB NUMBER A0-138-AE PAGE OF TEST REPORT NO. TR1-1188

601-2
1/64

GENERAL PRECISION, INC.
LIBRASCOPE GROUP

# ENVIRONMENTAL LABORATORY DATA SHEET

$I_R$ @ 4V

GROUP IV

TEST CONDITIONS:
IF RETEST CHECK ☐

READINGS IN NANOAMPS

| # | $I_7$ | $I_8$ | $I_9$ | $I_{CBO}$ | $I_3$ | | | |
|---|---|---|---|---|---|---|---|---|
| 86 | 4.2 | 3.9 | 4.0 | 7.2 | 7.4 | | | |
| 87 | 3.7 | 3.6 | 3.7 | 7.4 | 7.7 | | | |
| 88 | 3.6 | 3.6 | 3.5 | 6.4 | 6.5 | | | |
| 89 | 3.5 | 3.5 | 3.6 | 7.3 | 7.6 | | | |
| 90 | 3.4 | 3.2 | 3.1 | 5.8 | 6.0 | | | |
| 91 | 1.7 | 1.7 | 1.7 | 3.5 | 4.3 | | | |
| 92 | 1.8 | 1.8 | 1.8 | 3.7 | 4.3 | | | |
| 93 | 2.4 | 2.4 | 2.2 | 4.0 | 4.3 | | | |
| 94 | 3.3 | 3.2 | 3.3 | 6.0 | 6.2 | | | |
| 95 | 3.2 | 3.3 | 3.3 | 6.1 | 6.3 | | | |
| 96 | 3.3 | 3.6 | 3.3 | 6.4 | 6.7 | | | |
| 97 | 1.6 | 1.6 | 1.6 | 3.5 | 4.3 | | | |
| 98 | 3.4 | 3.3 | 3.3 | 6.0 | 6.2 | | | |
| 99 | 3.5 | 3.6 | 3.6 | 6.5 | 6.8 | | | |
| 100 | 3.4 | 3.4 | 3.4 | 6.6 | 6.8 | | | |
| 101 | 4.4 | 4.0 | 4.6 | 8.0 | 8.3 | | | |
| 102 | 3.4 | 3.3 | 3.4 | 6.1 | 6.2 | | | |
| 103 | 3.5 | 3.5 | 3.5 | 6.5 | 6.7 | | | |
| 104 | 3.6 | 3.7 | 3.6 | 6.6 | 6.6 | | | |
| 105 | 4.6 | 4.7 | 4.7 | 8.4 | 8.7 | | | |
| | | | | | | | | |
| | | CALIBRATION | WITH | 10 MEGOHMS | | | | |
| | | | 1.0V | 99.8 | NA | | | |
| | | | 0.5V | 49.7 | NA | | | |
| | | | | | | | | |
| | | | | | | | | |

| | | |
|---|---|---|
| TEST CONDUCTED FOR: NASA, OFFICE OF ADVANCED RESEARCH AND TECHNOLOGY | | DATE: 4-2-65 |
| TEST: INITIAL MEAS-D.C. PARAMETER CHARACTERISTICS | SAMPLE NUMBER: NOTED | BAROM. PRESS. IN. HG. |
| PART NAME & NUMBER: DTL NAND/NOR GATE - SC 736 | TEST MEDIUM: AIR | WET BULB TEMP. 63°F |
| MANUFACTURER: B | TEST TEMP. 77° C. ☐ F. ☒ | DRY BULB TEMP. 77°F |
| ENGINEER | TECHNICIAN: L. Hayn | INSPECTOR |
| REF. SPEC. | | DATA SHEET NUMBER |

JOB NUMBER A0-138-AE PAGE OF TEST REPORT NO. TR1-1188

601-2
1/64

GENERAL PRECISION, INC.
LIBRASCOPE GROUP

# ENVIRONMENTAL LABORATORY DATA SHEET

$I_R$ @ 4V

GROUP IV

TEST CONDITIONS:
IF RETEST CHECK ☐

READINGS IN NANOAMPS

| # | $I_7$ | $I_8$ | $I_9$ | $I_{CBO}$ | $I_3$ | | | |
|---|---|---|---|---|---|---|---|---|
| 106 | 3.5 | 3.4 | 3.5 | 6.2 | 6.5 | | | |
| 107 | 3.7 | 3.5 | 3.6 | 6.5 | 6.7 | | | |
| 108 | 3.5 | 3.6 | 3.5 | 6.5 | 6.6 | | | |
| 109 | 3.5 | 3.4 | 3.5 | 6.3 | 6.5 | | | |
| 110 | 3.8 | 3.9 | 4.0 | 7.8 | 8.0 | | | |
| 111 | 3.7 | 3.8 | 4.0 | 6.7 | 7.0 | | | |
| 112 | 1.9 | 1.9 | 1.9 | 3.7 | 4.4 | | | |
| 113 | 3.4 | 3.4 | 3.5 | 6.2 | 6.3 | | | |
| 114 | 3.7 | 3.6 | 3.6 | 6.7 | 6.9 | | | |
| 115 | 3.6 | 3.6 | 3.6 | 6.5 | 6.7 | | | |
| | | | | | | | | |
| | | | | | | | | |
| | | CALIBRATION | WITH | 10 MEGOHMS | | | | |
| | | | 1.0V | 99.8 | NA | | | |
| | | | 0.5V | 49.7 | NA | | | |

| | | | |
|---|---|---|---|
| TEST CONDUCTED FOR: NASA OFFICE OF ADVANCED RESEARCH AND TECHNOLOGY | | | DATE: 4-2-65 |
| TEST: INITIAL MEAS.-D.C. PARAMETER CHARACTERISTICS | SAMPLE NUMBER: NOTED | | BAROM. PRESS. IN. HG. |
| PART NAME & NUMBER: DTL NAND/NOR GATE - SC736 | TEST MEDIUM: AIR | | WET BULB TEMP. 63°F |
| MANUFACTURER: B | TEST TEMP. 77° | C. ☐ F. ☒ | DRY BULB TEMP. 77°F |
| ENGINEER | TECHNICIAN: S. Hayn | INSPECTOR | |
| REF. SPEC. | | DATA SHEET NUMBER | |

JOB NUMBER A0-198-AE PAGE OF TEST REPORT NO. TR1-1188

601-2
1/64

GENERAL PRECISION, INC
LIBRASCOPE GROUP

# ENVIRONMENTAL LABORATORY DATA SHEET

## GROUP I - INSTRUMENTATION CONTROL

PARAMETER: RESISTANCE MEASUREMENTS AT 1 MA

CALIBRATION CHECK AT 1 MA

| CALIBRATION RESISTOR | VOLTAGE - FULL SCALE = 100 VOLTS | | |
|---|---|---|---|
| 2000 OHMS | 0201 ' | 0202 ' | 0201 ' |
| 1000 OHMS | 0101 ' | 0101 ' | 0102 ' |
| 500 OHMS | 0051 ' | 0051 ' | 0052 ' |

| SAMPLE NUMBER | RESISTANCE - FULL SCALE = 100K OHMS | | |
|---|---|---|---|
| | R1 | R2 | R3 |
| 1 | 0193 ' | 0176 ' | 2172 ' |
| 2 | 0215 ' | 0189 ' | 2390 ' |
| 3 | 0204 ' | 0197 ' | 2402 ' |
| 4 | 0198 ' | 0185 ' | 2299 ' |
| 5' | 0212 ' | 0198 ' | 2417 ' |

| | | |
|---|---|---|
| TEST CONDUCTED FOR: NASA OFFICE OF ADVANCED RESEARCH AND DEVELOPMENT | | DATE 4-2-65 |
| TEST: INITIAL MEAS. - DC PARAMETER CHARACTERISTICS | SAMPLE NUMBER NOTED | BAROM. PRESS (IN. HG) |
| PART NAME & NUMBER: DTL NAND/NOR GATE - SC 736 | TEST MEDIUM AIR | WET BULB TEMP 60°F |
| MANUFACTURER: B | TEST TEMP 72°F | DRY BULB TEMP 72°F |
| ENGINEER: [illegible] | INSPECTOR | |
| REF SPEC | DATA SHEET NUMBER | |

JOB NUMBER A0-138-AE PAGE OF TEST REPORT NO TR1-1188

GENERAL PRECISION, INC
LIBRASCOPE GROUP

# ENVIRONMENTAL LABORATORY DATA SHEET

GROUP II - LIFE TEST GROUP

PARAMETER: RESISTANCE MEASUREMENTS AT 1 MA

| SAMPLE NUMBER | R1 | RESISTANCE - FULL SCALE = 100K OHMS R2 | R3 |
|---|---|---|---|
| 6 | 0195 ' | 0203 ' | 2341 ' |
| 7 | 0190 ' | 0188 ' | 2040 ' |
| 8 | 0175 ' | 0180 ' | 1808 ' |
| 9 | 0176 ' | 0184 ' | 1932 ' |
| 10 | 0173 ' | 0193 ' | 2051 ' |
| 11 | 0178 ' | 0188 ' | 2033 ' |
| 12 | 0188 ' | 0185 ' | 1955 ' |
| 13 | 0171 ' | 0180 ' | 1909 ' |
| 14 | 0200 ' | 0204 ' | 2355 ' |
| 15 | 0189 ' | 0189 ' | 2055 ' |
| 16 | 0171 ' | 0175 ' | 1894 ' |
| 17 | 0198 ' | 0199 ' | 2178 ' |
| 18 | 0197 ' | 0198 ' | 2146 ' |
| 19 | 0188 ' | 0192 ' | 2078 ' |
| 20 | 0168 ' | 0173 ' | 1832 ' |
| 21 | 0191 ' | 0202 ' | 2206 ' |
| 22 | 0200 ' | 0199 ' | 2128 ' |
| 23 | 0203 ' | 0206 ' | 2130 ' |
| 24 | 0196 ' | 0200 ' | 2083 ' |
| 25 | 0184 ' | 0189 ' | 2119 ' |

| | | |
|---|---|---|
| TEST CONDUCTED FOR: NASA OFFICE OF ADVANCED RESEARCH AND DEVELOPMENT | | DATE 4-2-65 |
| TEST: INITIAL MEAS-DC PARAMETER CHARACTERISTICS | SAMPLE NUMBER NOTED | BAROM PRESS IN. HG |
| PART NAME & NUMBER: DTL NAND/NOR GATE - SC 736 | TEST MEDIUM AIR | WET BULB TEMP 60°F |
| MANUFACTURER: B | TEST TEMP. 72°F | DRY BULB TEMP 72°F |
| ENGINEER | TECHNICIAN [illegible] | INSPECTOR |
| REF SPEC | | DATA SHEET NUMBER |

JOB NUMBER AO-138-AF PAGE OF TEST REPORT NO. TR1-1188

GENERAL PRECISION, INC
LIBRASCOPE GROUP

# ENVIRONMENTAL LABORATORY DATA SHEET

## GROUP III - TEMP CYCLE STEP STRESS GROUP

PARAMETER: RESISTANCE MEASUREMENTS AT 1 MA

| SAMPLE NUMBER | R1 | RESISTANCE - FULL SCALE = 100 K OHMS R2 | R3 |
|---|---|---|---|
| 46 | 0205 ' | 0201 ' | 2206 ' |
| 47 | 0175 ' | 0177 ' | 1940 ' |
| 48 | 0199 ' | 0205 ' | 2285 ' |
| 49 | 0168 ' | 0179 ' | 1828 ' |
| 50 | 0186 ' | 0181 ' | 1933 ' |
| 51 | 0185 ' | 0185 ' | 1976 ' |
| 52 | 0199 ' | 0199 ' | 2213 ' |
| 53 | 0191 ' | 0202 ' | 2012 ' |
| 54 | 0196 ' | 0201 ' | 2444 ' |
| 55 | 0172 ' | 0173 ' | 1862 ' |
| 56 | 0211 ' | 0215 ' | 2275 ' |
| 57 | 0183 ' | 0183 ' | 2109 ' |
| 58 | 0186 ' | 0185 ' | 1830 ' |
| 59 | 0186 ' | 0195 ' | 2159 ' |
| 60 | 0195 ' | 0187 ' | 2126 ' |
| 61 | 0196 ' | 0201 ' | 1657 ' |
| 62 | 0183 ' | 0185 ' | 2022 ' |
| 63 | 0192 ' | 0190 ' | 2102 ' |
| 64 | 0199 ' | 0193 ' | 2054 ' |
| 65 | 0190 ' | 0185 ' | 1884 ' |

CALIBRATION CHECK

| CALIBRATION RESISTOR | | VOLTAGE - FULL SCALE = 100 VOLTS | |
|---|---|---|---|
| 2000 OHMS | 0201 ' | 0201 ' | 0202 ' |
| 1000 OHMS | 0099 ' | 0100 ' | 0102 ' |
| 500 OHMS' | 0051 ' | 0049 ' | 0052 ' |

| | | | |
|---|---|---|---|
| TEST CONDUCTED: NASA OFFICE OF ADVANCED RESEARCH AND DEVELOPMENT | | DATE: 4-2-65 | |
| TEST: INITIAL MEAS.-D.C. PARAMETER CHARACTERISTICS | SAMPLE NUMBER: NOTED | BAROM PRESS | |
| PART NAME & NUMBER: DTL NAND/NOR GATE - SC 736 | TEST MEDIUM: AIR | | 60°F |
| MANUFACTURER: B | TEST TEMP: 72°F | | 72°F |
| ENGINEER | TEST COND. BY: E.K. Taskemi | INSPECTOR | |
| REF. SPEC | | DATA SHEET | |

JOB NUMBER A0-138-AE PAGE OF TEST REPORT NO TR 1-1188

GENERAL PRECISION, INC
LIBRASCOPE GROUP

# ENVIRONMENTAL LABORATORY DATA SHEET

## GROUP II - LIFE TEST GROUP

PARAMETER: RESISTANCE MEASUREMENTS AT 1 MA

| SAMPLE NUMBER | R1 | RESISTANCE - FULL SCALE = 1+OOKOHMS R2 | R3 |
|---|---|---|---|
| 26 | 0196 ' | 0200 ' | .2289 ' |
| 27 | 0220 ' | 0215 ' | 2919 ' |
| 28 | 0188 ' | 0196 ' | 2056 ' |
| 29 | 0184 ' | 0184 ' | 1932 ' |
| 30 | 0188 ' | 0191 ' | 2061 ' |
| 31 | 0222 ' | 0219 ' | 2296 ' |
| 32 | 0184 ' | 0187 ' | 2034 ' |
| 33 | 0179 ' | 0180 ' | 1951 ' |
| 34 | 0200 ' | 0203 ' | 2170 ' |
| 35 | 0196 ' | 0206 ' | 2332 ' |
| 36 | 0185 ' | 0191 ' | 2070 ' |
| 37 | 0172 ' | 0176 ' | 1842 ' |
| 38 | 0208 ' | 0206 ' | 2269 ' |
| 39 | 0185 ' | 0189 ' | 2036 ' |
| 40 | 0183 ' | 0192 ' | 1923 ' |
| 41 | 0199 ' | 0205 ' | 2165 ' |
| 42 | 0192 ' | 0197 ' | 2186 ' |
| 43 | 0181 ' | 0195 ' | 2068 ' |
| 44 | 0185 ' | 0187 ' | 2062 ' |
| 45 | 0198 ' | 0200 ' | 2169 ' |

CALIBRATION CHECK

| CALIBRATION RESISTOR | | VOLTAGE - FULL SCALE = 10 0 VOLTS | |
|---|---|---|---|
| 2000 OHMS | 0201 ' | 0202 ' | 0201 ' |
| 1000 OHMS | 0101 ' | 0102 ' | 0101 ' |
| 500 OHMS' | 0050 ' | 0052 ' | 0052 ' |

| | | |
|---|---|---|
| TEST CONDUCTED FOR: NASA OFFICE OF ADVANCED RESEARCH AND DEVELOPMENT | | DATE 4-2-65 |
| TEST: INITIAL MEAS.-DC PARAMETER CHARACTERISTICS | SAMPLE NUMBER: NOTED | BAROM. PRESS IN HG |
| PART NAME & NUMBER: DTL NAND/NOR GATE - SC 736 | TEST MEDIUM: AIR | WET BULB TEMP 60°F |
| MANUFACTURER: B | TEST TEMP. 72°F C. F. | DRY BULB TEMP 72°F |
| ENGINEER | TECHNICIAN: R Haskins | INSPECTOR |
| REF. SPEC. | | DATA SHEET NUMBER |

JOB NUMBER AD-138-AE PAGE OF TEST REPORT NO. TRI-1188

GENERAL PRECISION, INC
LIGNASCOPE GROUP

# ENVIRONMENTAL LABORATORY DATA SHEET

## GROUP IV - TEMP STEP STRESS GROUP

PARAMETER: RESISTANCE MEASUREMENTS AT 1 MA

RESISTANCE - FULL SCALE = 100K ohms

| SAMPLE number | R1 | R2 | R3 |
|---|---|---|---|
| 66 | 0186 ' | 0191 ' | 2058 ' |
| 67 | 0208 ' | 0219 ' | 2531 ' |
| 68 | 0169 ' | 0177 ' | 1904 ' |
| 69 | 0188 ' | 0195 ' | 2130 ' |
| 70 | 0189 ' | 0194 ' | 2220 ' |
| 71 | 0188 ' | 0188 ' | 1962 ' |
| 72 | 0168 ' | 0174 ' | 1837 ' |
| 73 | 0193 ' | 0196 ' | 2100 ' |
| 74 | 0203 ' | 0202 ' | 2196 ' |
| 75 | 0180 ' | 0186 ' | 2024 ' |
| 76 | 0200 ' | 0203 ' | 2174 ' |
| 77 | 0186 ' | 0221 ' | 1945 ' |
| 78 | 0179 ' | 0180 ' | 1822 ' |
| 79 | 0209 ' | 0211 ' | 2429 ' |
| 80' | 0192 ' | 0196 ' | 2125 ' |

| | | |
|---|---|---|
| TEST CONDUCTED FOR: NASA OFFICE OF ADVANCED RESEARCH AND DEVELOPMENT | | DATE 4-2-65 |
| TEST: INITIAL MEAS.-DC. PARAMETER CHARACTERISTICS | SAMPLE NUMBER NOTED | BAROM. PRESS IN. HG. |
| PART NAME & NO.: DTL NAND/NOR GATE - SC 736 | TEST MEDIUM AIR | WET BULB TEMP 60°F |
| MANUFACTURER: B | TEST TEMP. 72°F | DRY BULB TEMP 72°F |
| ENGINEER | INSPECTOR | |
| REF SPEC | DATA SHEET NUMBER | |

JOB NUMBER AO-138-AE PAGE OF TEST REPORT NO. TRI-1188

GENERAL PRECISION, INC
LIBRASCOPE GROUP

# ENVIRONMENTAL LABORATORY DATA SHEET

## GROUP IV - TEMPXSTEP STRESS GROUP

PARAMETER: RESISTANCE MEASUREMENTS AT 1 MA

| SAMPLE NUMBER | RESISTANCE - FULL SCALE = 100 K OHMS R1 | R2 | R3 |
|---|---|---|---|
| 81 | 0172 ' | 0164 ' | 1893 ' |
| 82 | 0175 ' | 0184 ' | 1895 ' |
| 83 | 0178 ' | 0185 ' | 1934 ' |
| 84 | 0193 ' | 0201 ' | 2295 ' |
| 85 | 0212 ' | 0213 ' | 2476 ' |
| 86 | 0179 ' | 0179 ' | 1900 ' |
| 87 | 0190 ' | 0199 ' | 2121 ' |
| 88 | 0200 ' | 0203 ' | 2412 ' |
| 89 | 0187 ' | 0199 ' | 2148 ' |
| 90 | 0177 ' | 0197 ' | 2134 ' |
| 91 | 0211 ' | 0220 ' | 2289 ' |
| 92 | 0195 ' | 0205 ' | 2292 ' |
| 93 | 0205 ' | 0209 ' | 2255 ' |
| 94 | 0192 ' | 0196 ' | 2093 ' |
| 95 | 0182 ' | 0189 ' | 2032 ' |
| 96 | 0168 ' | 0171 ' | 1839 ' |
| 97 | 0175 ' | 0179 ' | 1862 ' |
| 98 | 0186 ' | 0192 ' | 2028 ' |
| 99 | 0189 ' | 0200 ' | 2231 ' |
| 100' | 0189 ' | 0199 ' | 2161 ' |

## GROUP IV - TEMP STEP STRESS GROUP

| | | | |
|---|---|---|---|
| TEST CUSTOMER: NASA OFFICE OF ADVANCED RESEARCH AND DEVELOPMENT | | DATE: 4-2-65 | |
| TEST: INITIAL MEAS.-DC. PARAMETER CHARACTERISTICS | SAMPLE NUMBER: NOTED | | |
| PART NAME & NUMBER: DTL NAND/NOR GATE - SC 736 | TEST MEDIUM: AIR | | 60°F |
| MANUFACTURER: B | TEST TEMP: 72°F | | 72°F |
| ENGINEER: F. Kaskin | | | |
| REF SPEC: | | DATA SHEET: | |

JOB NUMBER AA-138-AE PAGE OF TEST REPORT NO TR1-1188

GENERAL PRECISION, INC
LIBRASCOPE GROUP

# ENVIRONMENTAL LABORATORY DATA SHEET

## GROUP IV - TEMP STEP STRESS GROUP

PARAMETER: RESISTANCE MEASUREMENTS AT 1 MA

RESISTANCE - FULL SCALE = 100K OHMS

| SAMPLE NUMBER | R1 | R2 | R3 |
|---|---|---|---|
| 101 | 0198 ' | 0185 ' | 2104 ' |
| 102 | 0202 ' | 0196 ' | 2282 ' |
| 103 | 0204 ' | 0211 ' | 2486 ' |
| 104 | 0177 ' | 0188 ' | 2023 ' |
| 105 | 0176 ' | 0175 ' | 1841 ' |
| 106 | 0192 ' | 0194 ' | 2109 ' |
| 107 | 0179 ' | 0181 ' | 1864 ' |
| 108 | 0186 ' | 0193 ' | 2095 ' |
| 109 | 0197 ' | 0199 ' | 2163 ' |
| 110 | 0180 ' | 0190 ' | 2019 ' |
| 111 | 0191 ' | 0189 ' | 2043 ' |
| 112 | 0181 ' | 0189 ' | 1950 ' |
| 113 | 0205 ' | 0205 ' | 2228 ' |
| 114 | 0189 ' | 0191 ' | 1398 ' |
| 115 | 0192 ' | 0194 ' | 2141 ' |

## CALIBRATION CHECK

VOLTAGE - FULL SCALE = 10 0 VOLTS

| CALIBRATION RESISTOR | | | |
|---|---|---|---|
| 2000 OHMS | 0203 ' | 0201 ' | 0202 ' |
| 1000 OHMS | 0101 ' | 0099 ' | 0101 ' |
| 500 OHMS' | 0050 ' | 0050 ' | 0048 ' |

TEST CONDUCTED FOR: NASA OFFICE OF ADVANCED RESEARCH AND TECHNOLOGY
DATE: 4-2-65
TEST: INITIAL MEAS-DC PARAMETER CHARACTERISTICS
SAMPLE NUMBER: NOTED
BAROM PRESS: IN. HG
PART NAME & NUMBER: DTL NAND/NOR GATE - SC 736
TEST MEDIUM: AIR
WET BULB TEMP: 60°F
MANUFACTURER: 8
TEST TEMP: 72°
DRY BULB TEMP: 72°F
ENGINEER:
TECHNICIAN: R Bloom
REF SPEC:
DATA SHEET NUMBER:

JOB NUMBER AD-138-AE PAGE OF TEST REPORT NO. TR1-1188

GENERAL PRECISION, INC
LIBRASCOPE GROUP

# ENVIRONMENTAL LABORATORY DATA SHEET

W

GROUP III - TEMP CYCLE STEP STRESS GROUP

PARAMETER: DIODE FORWARD CURRENT WITH V6 = 4 VOLTS

| SAMPLE NUMBER | If7 | If8 | If9 |
|---|---|---|---|
| | | CURRENT - FULL SCALE = 10 MA | |
| 46 | 1589 ' | 1580 ' | 1600 ' |
| 47 | 1820 ' | 1820 ' | 1800 ' |
| 48 | 1600 ' | 1589 ' | 1599 ' |
| 49 | 1839 ' | 1826 ' | 1827 ' |
| 50 | 1795 ' | 1776 ' | 1800 ' |
| 51 | 1762 ' | 1769 ' | 1770 ' |
| 52 | 1629 ' | 1603 ' | 1610 ' |
| 53 | 1600 ' | 1584 ' | 1600 ' |
| 54 | 1602 ' | 1599 ' | 1599 ' |
| 55 | 1839 ' | 1836 ' | 1841 ' |
| 56 | 1519 ' | 1519 ' | 1519 ' |
| 57 | 1744 ' | 1735 ' | 1733 ' |
| 58 | 1760 ' | 1750 ' | 1750 ' |
| 59 | 1631 ' | 1652 ' | 1639 ' |
| 60 | 1702 ' | 1720 ' | 1719 ' |
| 61 | 1575 ' | 1589 ' | 1599 ' |
| 62 | 1740 ' | 1752 ' | 1760 ' |
| 63 | 1682 ' | 1702 ' | 1700 ' |
| 64 | 1660 ' | 1633 ' | 1660 ' |
| 65 | 1778 ' | 1769 ' | 1749 ' |

CALIBRATION CHECK

| CALIBRATION RESISTOR | | | | |
|---|---|---|---|---|
| | | CURRENT - FULL SCALE = 10 MA | | |
| 2000 OHMS | 1997 ' | 1989 ' | 1969 ' | 1999 ' |
| 1000 OHMS' | 4000 ' | 4018 ' | 4002 ' | 3999 ' |

| | | |
|---|---|---|
| TEST CONDUCTED FOR: NASA, OFFICE OF ADVANCED RESEARCH AND TECHNOLOGY | | DATE 4-3-65 |
| TEST: INITIAL MEAS.-DC PARAMETER CHARACTERISTICS | SAMPLE NUMBER: NOTED | BAROM PRESS 30.16 IN HG |
| PART NAME & NUMBER: DTL NAND/NOR GATE — SC736 | TEST MEDIUM: AIR | WET BULB TEMP 58°F |
| MANUFACTURER: B | TEST TEMP 71° F C. F. | DRY BULB TEMP 71°F |
| ENGINEER | TECHNICIAN L. Hayn | INSPECTOR |
| REF SPEC | | DATA SHEET NUMBER |

JOB NUMBER AO-138-AE PAGE OF TEST REPORT NO. TR1-1188

GENERAL PRECISION, INC
LIGNASCOPE GROUP

# ENVIRONMENTAL LABORATORY DATA SHEET

GROUP I - INSTRUMENTATION CONTROL

CALIBRATION: CURRENT FULL SCALE = 10 MA
RESISTOR

| | | | | |
|---|---|---|---|---|
| 2000 OHMS | 1996 ' | 1996 ' | 1980 ' | 1996 ' |
| 1000 OHMS | 3999 ' | 3999 ' | 4000 ' | 4001 ' |

PARAMETER: DIODE FORWARD CURRENT WITH V10 = 4 VOLTS

| SAMPLE NUMBER | CURRENT FULL SCALE = 10 MA If7 | If8 | If9 |
|---|---|---|---|
| 1 | 1859 ' | 1832 ' | 1835 ' |
| 2 | 1673 ' | 1679 ' | 1689 ' |
| 3 | 1640 ' | 1609 ' | 1627 ' |
| 4 | 1732 ' | 1726 ' | 1732 ' |
| 5' | 1630 ' | 1629 ' | 1585 ' |

| | | |
|---|---|---|
| TEST CONDUCTED: NASA, OFFICE OF ADVANCED RESEARCH AND TECHNOLOGY | | DATE 4-3-65 |
| TEST: INITIAL MEAS-DC PARAMETER CHARACTERISTICS | SAMPLE NUMBER NOTED | BAROM PRESS 30.16 IN HG |
| PART NAME & NUMBER: DTL NAND/NOR GATE - SC 736 | TEST MEDIUM AIR | [illegible] 58°F |
| MANUFACTURER: B | TEST TEMP 71°F | [illegible] 71°F |
| ENGINEER | TECHNICIAN L. Hayn | INSPECTOR |
| REF SPEC | | DATA SHEET |

JOB NUMBER AO-138-AE PAGE OF TEST REPORT NO TRI-1188

GENERAL PRECISION, INC
LIBRASCOPE GROUP

# ENVIRONMENTAL LABORATORY DATA SHEET

GROUP II - LIFE TEST GROUP

PARAMETER: DIODE FORWARD CURRENT WITH V6 = 4 VOLTS

| SAMPLE NUMBER | If7 | CURRENT - FULL SCALE = 10 MA If8 | If9 |
|---|---|---|---|
| 6 | 1599 ' | 1599 ' | 1583 ' |
| 7 | 1732 ' | 1711 ' | 1719 ' |
| 8 | 1826 ' | 1830 ' | 1805 ' |
| 9 | 1789 ' | 1769 ' | 1779 ' |
| 10 | 1667 ' | 1679 ' | 1680 ' |
| 11 | 1718 ' | 1720 ' | 1699 ' |
| 12 | 1720 ' | 1732 ' | 1739 ' |
| 13 | 1759 ' | 1779 ' | 1779 ' |
| 14 | 1579 ' | 1591 ' | 1586 ' |
| 15 | 1691 ' | 1689 ' | 1700 ' |
| 16 | 1840 ' | 1840 ' | 1842 ' |
| 17 | 1609 ' | 1619 ' | 1606 ' |
| 18 | 1639 ' | 1619 ' | 1632 ' |
| 19 | 1659 ' | 1679 ' | 1632 ' |
| 20 | 1842 ' | 1839 ' | 1842 ' |
| 21 | 1565 ' | 1599 ' | 1582 ' |
| 22 | 1626 ' | 1600 ' | 1600 ' |
| 23 | 1575 ' | 1573 ' | 1589 ' |
| 24 | 1599 ' | 1626 ' | 1640 ' |
| 25' | 1689 ' | 1700 ' | 1706 ' |

| | | |
|---|---|---|
| TEST CONDUCTED FOR: NASA, OFFICE OF ADVANCED RESEARCH AND TECHNOLOGY | | DATE 4-3-65 |
| TEST: INITIAL MEAS.-DC. PARAMETER CHARACTERISTICS | SAMPLE NUMBER NOTED | BAROM. PRESS 30.16 IN. HG |
| PART NAME & NUMBER: DTL NAND/NOR GATE — SC 736 | TEST MEDIUM AIR | WET BULB TEMP 58°F |
| MANUFACTURER: B | TEST TEMP 71° F | DRY BULB TEMP 71°F |
| ENGINEER | TECHNICIAN S. Hayes | |
| REF SPEC | | DATA SHEET NUMBER |

JOB NUMBER A0-138-AE PAGE OF TEST REPORT NO. TR1-1188

GENERAL PRECISION, INC
LIBRASCOPE GROUP

# ENVIRONMENTAL LABORATORY DATA SHEET

## GROUP II - LIFE TEST GROUP

PARAMETER: DIODE FORWARD CURRENT WITH V6 = 4 VOLTS

| SAMPLE NUMBER | If7 | If8 | If9 |
|---|---|---|---|
| | | CURRENT - FULL SCALE = 10 MA | |
| 26 | 1630 ' | 1619 ' | 1590 ' |
| 27 | 1489 ' | 1492 ' | 1490 ' |
| 28 | 1666 ' | 1658 ' | 1646 ' |
| 29 | 1759 ' | 1756 ' | 1749 ' |
| 30 | 1702 ' | 1690 ' | 1682 ' |
| 31 | 1457 ' | 1460 ' | 1479 ' |
| 32 | 1691 ' | 1739 ' | 1719 ' |
| 33 | 1799 ' | 1799 ' | 1799 ' |
| 34 | 1589 ' | 1579 ' | 1575 ' |
| 35 | 1566 ' | 1570 ' | 1599 ' |
| 36 | 1682 ' | 1670 ' | 1669 ' |
| 37 | 1829 ' | 1842 ' | 1620 ' |
| 38 | 1559 ' | 1559 ' | 1580 ' |
| 39 | 1700 ' | 1686 ' | 1710 ' |
| 40 | 1669 ' | 1698 ' | 1665 ' |
| 41 | 1571 ' | 1579 ' | 1579 ' |
| 42 | 1645 ' | 1659 ' | 1659 ' |
| 43 | 1630 ' | 1615 ' | 1679 ' |
| 44 | 1739 ' | 1717 ' | 1729 ' |
| 45 | 1636 ' | 1621 ' | 1626 ' |

## CALIBRATION CHECK

| CALIBRATION RESISTOR | | | | |
|---|---|---|---|---|
| | | CURRENT - FULL SCALE = 10 MA | | |
| 2000 OHMS | 1991 ' | 1992 ' | 1976 ' | 1996 ' |
| 1000 OHMS' | 3999 ' | 3999 ' | 4017 ' | 4000 ' |

| | | |
|---|---|---|
| TEST CONDUCTED FOR: NASA OFFICE OF ADVANCED RESEARCH AND TECHNOLOGY | | DATE 4-3-65 |
| TEST: INITIAL MEAS. DC PARAMETER CHARACTERISTICS | SAMPLE NUMBER NOTED | BAROM PRESS 30.16 IN HG |
| PART NAME & NO.: DTL NAND/NOR GATE - SC 736 | TEST MEDIUM AIR | WET BULB TEMP 58°F |
| MANUFACTURER: B | TEST TEMP 71° F | DRY BULB TEMP 71°F |
| ENGINEER | TECHNICIAN L. Hayes | INSPECTOR |
| REF SPEC | | DATA SHEET NUMBER |

JOB NUMBER A0-138-AE PAGE OF TEST REPORT NO. TR1-1188

GENERAL PRECISION, INC
LIBRASCOPE GROUP

# ENVIRONMENTAL LABORATORY DATA SHEET

GROUP IV - TEMP STEP STRESS GROUP

PARAMETER: DIODE FORWARD CURRENT WITH V6 = 4 VOLTS

CURRENT - FULL SCALE = 10 MA

| SAMPLE NUMBER | If7 | If8 | If9 |
|---|---|---|---|
| 66 | 1720 ' | 1729 ' | 1712 ' |
| 67 | 1459 ' | 1459 ' | 1478 ' |
| 68 | 1840 ' | 1831 ' | 1822 ' |
| 69 | 1660 ' | 1652 ' | 1649 ' |
| 70 | 1679 ' | 1656 ' | 1680 ' |
| 71 | 1722 ' | 1722 ' | 1722 ' |
| 72 | 1856 ' | 1852 ' | 1845 ' |
| 73 | 1659 ' | 1641 ' | 1650 ' |
| 74 | 1592 ' | 1586 ' | 1597 ' |
| 75 | 1744 ' | 1719 ' | 1730 ' |
| 76 | 1562 ' | 1579 ' | 1562 ' |
| 77 | 1470 ' | 1446 ' | 1459 ' |
| 78 | 1824 ' | 1811 ' | 1810 ' |
| 79 | 1520 ' | 1519 ' | 1532 ' |
| 80' | 1662 ' | 1642 ' | 1666 ' |

| | | |
|---|---|---|
| TEST CONDUCTED FOR: NASA, OFFICE OF ADVANCED RESEARCH AND TECHNOLOGY | | DATE 4-3-65 |
| TEST: INITIAL MEAS.-DC PARAMETER CHARACTERISTICS | SAMPLE NUMBER NOTED | BAROM PRESS 30.16 IN HG |
| PART NAME & NUMBER: DTL NAND/NOR GATE — SC 736 | TEST MEDIUM AIR | WET BULB TEMP 58°F |
| MANUFACTURER: B | TEST TEMP 71° F | DRY BULB TEMP 71°F |
| ENGINEER | TECHNICIAN L. Hayn | |
| REF SPEC | | DATA SHEET NUMBER |

JOB NUMBER A0-138-AE PAGE OF TEST REPORT NO. TR1-1188

GENERAL PRECISION, INC
LIBRASCOPE GROUP

# ENVIRONMENTAL LABORATORY DATA SHEET

2

GROUP IV- TEMP STEP STRESS GROUP

PARAMETER: DIODE FORWARD CURRENT WITH V6 = 4 VOLTS

| SAMPLE NUMBER | If7 | CURRENT - FULL SCALE = 10 MA If8 | If9 |
|---|---|---|---|
| 81 | 2140 ' | 2132 ' | 2120 ' |
| 82 | 1766 ' | 1766 ' | 1769 ' |
| 83 | 1770 ' | 1762 ' | 1742 ' |
| 84 | 1618 ' | 1602 ' | 1609 ' |
| 85 | 1522 ' | 1520 ' | 1507 ' |
| 86 | 1818 ' | 1819 ' | 1806 ' |
| 87 | 1634 ' | 1607 ' | 1630 ' |
| 88 | 1546 ' | 1559 ' | 1579 ' |
| 89 | 1612 ' | 1620 ' | 1615 ' |
| 90 | 1647 ' | 1669 ' | 1641 ' |
| 91 | 1460 ' | 1445 ' | 1470 ' |
| 92 | 1550 ' | 1570 ' | 1541 ' |
| 93 | 1562 ' | 1559 ' | 1556 ' |
| 94 | 1649 ' | 1642 ' | 1635 ' |
| 95 | 1713 ' | 1710 ' | 1706 ' |
| 96 | 1879 ' | 1859 ' | 1870 ' |
| 97 | 1809 ' | 1809 ' | 1809 ' |
| 98 | 1702 ' | 1699 ' | 1690 ' |
| 99 | 1599 ' | 1600 ' | 1596 ' |
| 100' | 1629 ' | 1620 ' | 1619 ' |

| | | |
|---|---|---|
| TEST CONDUCTED: NASA, OFFICE OF ADVANCED RESEARCH AND TECHNOLOGY | | DATE: 4-3-65 |
| TEST: INITIAL MEAS.-DC PARAMETER CHARACTERISTICS | SAMPLE NUMBER: NOTED | BAROM PRESS: 30.16 IN. HG |
| PART NAME & NUMBER: DTL NAND/NOR GATE - SC736 | TEST MEDIUM: AIR | [illegible]: 58°F |
| MANUFACTURER: B | TEST TEMP: 71°F | [illegible]: 71°F |
| ENGINEER: [illegible] | TECHNICIAN: L. Hayn | INSPECTOR: |
| REF SPEC: | | DATA SHEET: |

JOB NUMBER AO-138-AE PAGE OF TEST REPORT NO. TR1-1188

GENERAL PRECISION, INC
LIBRASCOPE GROUP

# ENVIRONMENTAL LABORATORY DATA SHEET

GROUP IV - TEMP STEP STRESS GROUP

PARAMETER: DIODE FORWARD CURRENT WITH V6 = 4 VOLTS

| SAMPLE NUMBER | If7 | CURRENT - FULL SCALE = 10 MA IF8 | If9 |
|---|---|---|---|
| 101 | 1819 ' | 1810 ' | 1819 ' |
| 102 | 1650 ' | 1639 ' | 755 ' |
| 103 | 1520 ' | 1532 ' | 1530 ' |
| 104 | 1720 ' | 1722 ' | 1740 ' |
| 105 | 1862 ' | 1886 ' | 1866 ' |
| 106 | 1682 ' | 1682 ' | 1686 ' |
| 107 | 1789 ' | 1779 ' | 1791 ' |
| 108 | 1680 ' | 1675 ' | 1674 ' |
| 109 | 1621 ' | 1625 ' | 1646 ' |
| 110 | 1712 ' | 1710 ' | 1705 ' |
| 111 | 1730 ' | 1709 ' | 1720 ' |
| 112 | 1719 ' | 1704 ' | 1705 ' |
| 113 | 1569 ' | 1589 ' | 1564 ' |
| 114 | 1657 ' | 1673 ' | 1680 ' |
| 115 | 1660 ' | 1676 ' | 1672 ' |

CALIBRATION CHECK

| CALIBRATION RESISTOR | CURRENT - FULL SCALE = 10 MA | | | |
|---|---|---|---|---|
| 2000 OHMS | 1996 ' | 2000 ' | 1989 ' | 1996 ' |
| 1000 OHMS' | 4000 ' | 4000 ' | 4015 ' | 4000 ' |

| | | |
|---|---|---|
| TEST CONDUCTED BY: NASA, OFFICE OF ADVANCED RESEARCH AND TECHNOLOGY | | DATE 4-3-65 |
| TEST: INITIAL MEAS.-DC PARAMETER CHARACTERISTICS | SAMPLE NUMBER NOTED | BAROM PRESS 31.16 IN. HG |
| PART NAME & NO.: DTL NAND/NOR GATE - SC736 | TEST MEDIUM AIR | WET BULB TEMP 58°F |
| MANUFACTURER: B | TEST TEMP. 71°F | DRY BULB TEMP 71°F |
| ENGINEER | TECHNICIAN L. Hayn | INSPECTOR |
| REF SPEC. | | DATA SHEET NUMBER |

JOB NUMBER A0-138-AE PAGE OF TEST REPORT NO. TR1-1188

GENERAL PRECISION, INC
LIBRASCOPE GROUP

# ENVIRONMENTAL LABORATORY DATA SHEET

GROUP I - INSTRUMENTATION CONTROL

PARAMETER: OUTPUT SATURATION VOLTAGE AT Ic = 10 MA - Ib = 1 MA

CALIBRATION CHECK AT Ic = 10MA - Ib = 1 MA

| CALIBRATION RESISTOR | | VOLTAGE - FULL SCALE = 10 VOLTS | |
|---|---|---|---|
| 500 OHMS | 0498 ' | 0495 ' | 0496 ' |
| 50 OHMS | 0499 ' | 0497 ' | 0499 ' |

| SAMPLE NUMBER | V3 | VOLTAGE - FULL SCALE = 10 VOLTS |
|---|---|---|
| 1 | 0201 ' | |
| 2 | 0195 ' | |
| 3 | 0202 ' | |
| 4 | 0202 ' | |
| 5' | 0191 ' | |

| | | |
|---|---|---|
| TEST CONDUCTED FOR: NASA OFFICE OF ADVANCED RESEARCH AND TECHNOLOGY | | DATE: 4-5-65 |
| TEST: INITIAL MEAS.-DC. PARAMETER CHARACTERISTICS | SAMPLE NUMBER: NOTED | BAROM. PRESS. 30.21 IN. HG. |
| PART NAME & NUMBER: DTL NAND/NOR GATE - SC796 | TEST MEDIUM: AIR | WET BULB TEMP. 68°F |
| MANUFACTURER: B | TEST TEMP. 72° C. ☐ F. ☒ | DRY BULB TEMP. 72°F. |
| ENGINEER / TECHNICIAN | INSPECTOR | |
| REF SPEC. | DATA SHEET NUMBER | |

JOB NUMBER AO-138-AE PAGE OF TEST REPORT NO. TR1-1188

601-2
1/64

GENERAL PRECISION, INC
LIBRASCOPE GROUP

# ENVIRONMENTAL LABORATORY DATA SHEET

GROUP II- LIFE TEST GROUP

PARAMETER: OUTPUT SATURATION VOLTAGE AT Ic= 10 MA Ib = 1 MA

VOLTAGE - FULL SCALE = 10 VOLTS

| SAMPLE NUMBER | V3 |
|---|---|
| 6 | 0259 ' |
| 7 | 0256 ' |
| 8 | 0239 ' |
| 9 | 0256 ' |
| 10 | 0219 ' |
| 11 | 0266 ' |
| 12 | 0248 ' |
| 13 | 0252 ' |
| 14 | 0258 ' |
| 15 | 0225 ' |
| 16 | 0281 ' |
| 17 | 0257 ' |
| 18 | 0251 ' |
| 19 | 0234 ' |
| 20 | 0261 ' |
| 21 | 0239 ' |
| 22 | 0235 ' |
| 23 | 0254 ' |
| 24 | 0243 ' |
| 25' | 0252 ' |

| | | |
|---|---|---|
| TEST CONDUCTED FOR: NASA, OFFICE OF ADVANCED RESEARCH AND TECHNOLOGY | | DATE: 4-5-65 |
| TEST: INITIAL MEAS.-DC PARAMETER CHARACTERISTICS | SAMPLE NUMBER: NOTED | BAROM. PRESS: 30.21 IN. HG |
| PART NAME & NUMBER: DTL NAND/NOR GATE - SC 736 | TEST MEDIUM: AIR | WET BULB TEMP.: 68°F |
| MANUFACTURER: B | TEST TEMP.: 72° C. ☐ F. ☒ | DRY BULB TEMP.: 72°F |
| ENGINEER | TECHNICIAN | INSPECTOR |
| REF. SPEC. | | DATA SHEET NUMBER |

JOB NUMBER A0-138-AE PAGE OF TEST REPORT NO. TR1-1188

621-2
1/64

GENERAL PRECISION, INC
LIBRASCOPE GROUP

# ENVIRONMENTAL LABORATORY DATA SHEET

GROUP II- LIFE TEST GROUP

PARAMETER: OUTPUT SATURATION VOLTAGE AT Ic= 10 MA Ib = 1 MA

| SAMPLE NUMBER | V3 | VOLTAGE - FULL SCALE = 10 VOLTS |
|---|---|---|
| 26 | 0261 ' | |
| 27 | 0239 ' | |
| 28 | 0264 ' | + |
| 29 | 0251 ' | |
| 30 | 0311 ' | |
| 31 | 0239 ' | |
| 32 | 0256 ' | |
| 33 | 0255 ' | |
| 34 | 0238 ' | |
| 35 | 0260 ' | |
| 36 | 0242 ' | |
| 37 | 0258 ' | |
| 38 | 0238 ' | |
| 39 | 0226 ' | |
| 40 | 0269 ' | |
| 41 | 0254 ' | |
| 42 | 0262 ' | |
| 43 | 0231 ' | |
| 44 | 0252 ' | |
| 45 | 0249 ' | |

CALIBRATION CHECK AT Ic = 10MA - Ib = 1 MA

| CALIBRATION RESISTOR | VOLTAGE - FULL SCALE = 10 VOLTS | | |
|---|---|---|---|
| 500 OHMS | 0498 ' | 0495 ' | 0499 ' |
| 50 OHMS' | 0498 ' | 0495 ' | 0497 ' |

| | | |
|---|---|---|
| TEST CONDUCTED FOR: NASA OFFICE OF ADVANCED RESEARCH AND TECHNOLOGY | | DATE: 4-5-65 |
| TEST: INITIAL MEAS-DC PARAMETER CHARACTERISTICS | SAMPLE NUMBER: NOTED | BAROM. PRESS. 30.21 IN. HG. |
| PART NAME & NUMBER: DTL NAND/NOR GATE - SC736 | TEST MEDIUM: AIR | WET BULB TEMP. 68°F |
| MANUFACTURER: B | TEST TEMP. 72° C. ☐ F. ☒ | DRY BULB TEMP. 72°F |
| ENGINEER | TECHNICIAN | INSPECTOR |
| REF. SPEC. | | DATA SHEET NUMBER |

JOB NUMBER A0-138-AE PAGE OF TEST REPORT NO. TR1-1188

601-2
1/64

GENERAL PRECISION, INC
LIBRASCOPE GROUP

# ENVIRONMENTAL LABORATORY DATA SHEET

GROUP III- TEMP CYCLE STEP STRESS GROUP

PARAMETER: OUTPUT SATURATION VOLTAGE AT Ic= 10 MA Ib = 1 MA

VOLTAGE - FULL SCALE = 10 VOLTS

| SAMPLE NUMBER | V3 |
|---|---|
| 46 | 0261 ' |
| 47 | 0263 ' |
| 48 | 0246 ' |
| 49 | 0253 ' |
| 50 | 0234 ' |
| 51 | 0256 ' |
| 52 | 0251 ' |
| 53 | 0266 ' |
| 54 | 0251 ' |
| 55 | 0259 ' |
| 56 | 0272 ' |
| 57 | 0268 ' |
| 58 | 0238 ' |
| 59 | 0247 ' |
| 60 | 0258 ' |
| 61 | 0255 ' |
| 62 | 0259 ' |
| 63 | 0246 ' |
| 64 | 0296 ' |
| 65 | 0246 ' |

CALIBRATION CHECK AT Ic = 10MA - Ib = 1 MA

VOLTAGE - FULL SCALE = 10 VOLTS

| CALIBRATION RESISTOR | | | |
|---|---|---|---|
| 500 OHMS | 0496 ' | 0498 ' | 0496 ' |
| 50 OHMS' | 0497 ' | 0499 ' | 0499 ' |

| | | |
|---|---|---|
| TEST CONDUCTED FOR: NASA OFFICE OF ADVANCED RESEARCH AND TECHNOLOGY | | DATE: 4-5-65 |
| TEST: INITIAL MEAS-DC PARAMETER CHARACTERISTICS | SAMPLE NUMBER: NOTED | BAROM. PRESS: 30-21 IN. HG |
| PART NAME & NUMBER: DTL NAND/NOR GATE — SC 736 | TEST MEDIUM: AIR | WET BULB TEMP: 68°F |
| MANUFACTURER: B | TEST TEMP: 72° C. ☐ F. ☑ | DRY BULB TEMP: 72°F |
| ENGINEER | TECHNICIAN | INSPECTOR |
| REF. SPEC. | | DATA SHEET NUMBER |

JOB NUMBER Ao-138-AE PAGE OF TEST REPORT NO. TR1-1188

601-2
1-64

GENERAL PRECISION, INC
LIBRASCOPE GROUP

# ENVIRONMENTAL LABORATORY DATA SHEET

GROUP IV - TEMP STEP STRESS GROUP

PARAMETER: OUTPUT SATURATION VOLTAGE AT Ic= 10 MA Ib = 1 MA

VOLTAGE - FULL SCALE = 10 VOLTS

| SAMPLE NUMBER | V3 |
|---|---|
| 66 | 0253 ' |
| 67 | 0290 ' |
| 68 | 0271 ' |
| 69 | 0255 ' |
| 70 | 0247 ' |
| 71 | 0265 ' |
| 72 | 0262 ' |
| 73 | 0296 ' |
| 74 | 0246 ' |
| 75 | 0256 ' |
| 76 | 0238 ' |
| 77 | 0281 ' |
| 78 | 0229 ' |
| 79 | 0299 ' |
| 80' | 0293 ' |

| | | |
|---|---|---|
| TEST CONDUCTED FOR: NASA, OFFICE OF ADVANCED RESEARCH AND DEVELOPMENT | | DATE: 4-5-65 |
| TEST: INITIAL MEAS-DC PARAMETER CHARACTERISTICS | SAMPLE NUMBER: NOTED | BAROM. PRESS: 30.21 IN. HG |
| PART NAME & NUMBER: DTL NAND/NOR GATE - SC 736 | TEST MEDIUM: AIR | WET BULB TEMP.: 68°F. |
| MANUFACTURER: B | TEST TEMP.: 72° C. ☐ F. ☒ | DRY BULB TEMP.: 72°F. |
| ENGINEER / TECHNICIAN | INSPECTOR | |
| REF. SPEC. | DATA SHEET NUMBER | |

JOB NUMBER AO-139-AE PAGE OF TEST REPORT NO. TR1-1188

6211-2
1/64

GENERAL PRECISION INC
LIBRASCOPE GROUP

# ENVIRONMENTAL LABORATORY DATA SHEET

GROUP IV - TEMP STEP STRESS GROUP

PARAMETER: OUTPUT SATURATION VOLTAGE AT Ic= 10 MA Ib = 1 MA

VOLTAGE - FULL SCALE = 10 VOLTS

| SAMPLE NUMBER | V3 |
|---|---|
| 81 | 0271 ' |
| 82 | 0230 ' |
| 83 | 0261 ' |
| 84 | 0262 ' |
| 85 | 0251 ' |
| 86 | 0268 ' |
| 87 | 0281 ' |
| 88 | 0263 ' |
| 89 | 0263 ' |
| 90 | 0238 ' |
| 91 | 0258 ' |
| 92 | 0270 ' |
| 93 | 0281 ' |
| 94 | 0252 ' |
| 95 | 0245 ' |
| 96 | 0265 ' |
| 97 | 0227 ' |
| 98 | 0223 ' |
| 99 | 0267 ' |
| 100' | 0263 ' |

| | | |
|---|---|---|
| TEST CONDUCTED FOR: NASA, OFFICE OF ADVANCED RESEARCH AND TECHNOLOGY | | DATE 4-5-65 |
| TEST: INITIAL MEAS-DC PARAMETER CHARACTERISTICS | SAMPLE NUMBER NOTED | BAROM. PRESS. 30.21 |
| PART NAME & NUMBER: DTL NAND/NOR GATE - SC 736 | TEST MEDIUM AIR | WET BULB TEMP. 68°F |
| MANUFACTURER: B | TEST TEMP. 72° C. R. | DRY BULB TEMP. 72°F |
| ENGINEER | TECHNICIAN | INSPECTOR |
| REF. SPEC. | | DATA SHEET NUMBER |

JOB NUMBER A0-138-AE PAGE OF TEST REPORT NO. TR1-1188

GENERAL PRECISION INC
LIBRASCOPE GROUP

# ENVIRONMENTAL LABORATORY DATA SHEET

GROUP IV - TEMP STEP STRESS GROUP

PARAMETER: OUTPUT SATURATION VOLTAGE AT Ic= 10 MA Ib = 1 MA

VOLTAGE - FULL SCALE = 10 VOLTS

| SAMPLE NUMBER | V3 |
|---|---|
| 101 | 0270 ' |
| 102 | 0246 ' |
| 103 | 0261 ' |
| 104 | 0241 ' |
| 105 | 0291 ' |
| 106 | 0238 ' |
| 107 | 0275 ' |
| 108 | 0242 ' |
| 109 | 0251 ' |
| 110 | 0276 ' |
| 111 | 0250 ' |
| 112 | 0223 ' |
| 113 | 0236 ' |
| 114 | 0252 ' |
| 115 | 0254 ' |

CALIBRATION CHECK AT Ic = 10MA - Ib = 1 MA

VOLTAGE - FULL SCALE = 10 VOLTS

| CALIBRATION RESISTOR | | | |
|---|---|---|---|
| 500 OHMS | 0495 ' | 0496 ' | 0498 ' |
| 50 OHMS' | 0497 ' | 0497 ' | 0497 ' |

| | | |
|---|---|---|
| NASA OFFICE OF ADVANCED RESEARCH AND TECHNOLOGY | | DATE 4-5-65 |
| INITIAL MEAS-D.C. PARAMETER CHARACTERISTICS | SAMPLE NUMBER NOTED | BAROM PRESS 30.21 |
| DTL NAND/NOR GATE - SC 736 | TEST MEDIUM AIR | WET BULB TEMP 68° F |
| B | TEST TEMP 72° C. R. | DRY BULB TEMP 72° F |

ENGINEER TECHNICIAN INSPECTOR

DATA SHEET NUMBER

JOB NUMBER Ao-138-AE PAGE OF TEST REPORT NO. TR1-1188

GENERAL PRECISION, INC.
LIBRASCOPE GROUP

# ENVIRONMENTAL LABORATORY DATA SHEET

TEST CONDITIONS: DC BETA @ $I_C$ = 1 MA AND VCE = 0.5 VDC
IF RETEST CHECK ☐

| SAMPLE NUMBER | $I_B$ uA | | | | | | | |
|---|---|---|---|---|---|---|---|---|
| 1 | 25.03 | | | | | | | |
| 2 | 28.08 | | | | | | | |
| 3 | 22.05 | | | | | | | |
| 4 | 22.65 | | | | | | | |
| 5 | 16.67 | | | | | | | |

TEST CONDUCTED FOR: NASA, OFFICE OF ADVANCED RESEARCH AND TECHNOLOGY

DATE: 4-6-65

TEST: INITIAL MEAS-DC PARAMETER CHARACTERISTICS

SAMPLE NUMBER: NOTED

BAROM. PRESS. IN. HG.

PART NAME & NUMBER: DTL NAND/NOR GATE - SC 736

TEST MEDIUM: AIR

WET BULB TEMP. 60°F

MANUFACTURER: B

TEST TEMP. 74° C. ☐ F. ☒

DRY BULB TEMP. 74°F

ENGINEER

TECHNICIAN N. D. Witanen

INSPECTOR

REF. SPEC.

DATA SHEET NUMBER

JOB NUMBER A0-138-AE PAGE OF TEST REPORT NO. TR1-1188

601-2
1/64

GENERAL PRECISION, INC.
LIBRASCOPE GROUP

# ENVIRONMENTAL LABORATORY DATA SHEET

TEST CONDITIONS: D.C. BETA @ $I_C$ = 1 MA and VCE = 0.5 VDC
IF RETEST CHECK ☐

| SAMPLE NUMBER | $I_B$ μa | | SAMPLE NUMBER | $I_B$ μa | | SAMPLE NUMBER | $I_B$ μa | |
|---|---|---|---|---|---|---|---|---|
| 6 | 17.46 | | 26 | 18.28 | | 46 | 24.50 | |
| 7 | 19.39 | | 27 | 20.71 | | 47 | 46.19 | |
| 8 | 12.83 | | 28 | 26.88 | | 48 | 20.46 | |
| 9 | 46.88 | | 29 | 16.20 | | 49 | 23.60 | |
| 10 | 6.92 | | 30 | 36.10 | | 50 | 16.17 | |
| 11 | 22.57 | | 31 | 13.76 | | 51 | 21.48 | |
| 12 | 12.84 | | 32 | 48.35 | | 52 | 16.33 | |
| 13 | 21.16 | | 33 | 43.16 | | 53 | 27.82 | |
| 14 | 23.17 | | 34 | 16.69 | | 54 | 33.74 | |
| 15 | 8.67 | | 35 | 18.76 | | 55 | 46.17 | |
| 16 | 24.90 | | 36 | 17.11 | | 56 | 23.75 | |
| 17 | 20.72 | | 37 | 46.20 | | 57 | 25.80 | |
| 18 | 17.38 | | 38 | 16.25 | | 58 | 11.89 | |
| 19 | 34.34 | | 39 | 23.76 | | 59 | 23.40 | |
| 20 | 46.78 | | 40 | 11.46 | | 60 | 33.86 | |
| 21 | 13.20 | | 41 | 15.73 | | 61 | 26.79 | |
| 22 | 13.61 | | 42 | 18.00 | | 62 | 39.47 | |
| 23 | 14.49 | | 43 | 11.74 | | 63 | 16.08 | |
| 24 | 27.32 | | 44 | 13.80 | | 64 | 25.74 | |
| 25 | 16.38 | | 45 | 14.64 | | 65 | 13.60 | |

| | | |
|---|---|---|
| TEST CONDUCTED FOR: NASA, OFFICE OF ADVANCED RESEARCH AND TECHNOLOGY | | DATE: 4-6-65 |
| TEST: INITIAL MEAS-DC PARAMETER CHARACTERISTICS | SAMPLE NUMBER: NOTED | BAROM. PRESS. IN. HG. |
| PART NAME & NUMBER: DTL NAND/NOR GATE - SC 736 | TEST MEDIUM: AIR | WET BULB TEMP. 60°F |
| MANUFACTURER: B | TEST TEMP. 74° C. ☐ F. ☒ | DRY BULB TEMP. 74°F |
| ENGINEER | TECHNICIAN: L. Hayn | INSPECTOR |
| REF. SPEC. | | DATA SHEET NUMBER |

JOB NUMBER AO-138-AE PAGE OF TEST REPORT NO. TR1-1188

601-2
1/64

GENERAL PRECISION, INC.
LIBRASCOPE GROUP

# ENVIRONMENTAL LABORATORY DATA SHEET

TEST CONDITIONS: BETA @ $I_C$ = 1 MA AND VCE = .9 VDC

IF RETEST CHECK ☐

| SAMPLE NUMBER | $I_B$ μA | | SAMPLE NUMBER | $I_B$ μA | | SAMPLE NUMBER | $I_B$ μA | |
|---|---|---|---|---|---|---|---|---|
| 66 | 23.65 | | 86 | 27.60 | | 107 | 43.10 | |
| 67 | 26.80 | | 87 | 22.97 | | 108 | 18.79 | |
| 68 | 46.27 | | 88 | 20.25 | | 109 | 14.76 | |
| 69 | 15.90 | | 89 | 14.84 | | 110 | 27.59 | |
| 70 | 26.48 | | 90 | 17.29 | | 111 | 18.71 | |
| 71 | 53.16 | | 91 | 22.09 | | 112 | 21.92 | |
| 72 | 42.80 | | 92 | 27.34 | | 113 | 13.77 | |
| 73 | 30.20 | | 93 | 27.00 | | 114 | 12.89 | |
| 74 | 16.67 | | 94 | 18.12 | | 115 | 18.91 | |
| 75 | 19.27 | | 95 | 10.67 | | | | |
| 76 | 15.79 | | 96 | 37.00 | | | | |
| 77 | 14.08 | | 97 | 23.24 | | | | |
| 78 | 27.18 | | 98 | 7.89 | | | | |
| 79 | 26.94 | | 99 | 24.00 | | | | |
| 80 | 30.59 | | 100 | 26.08 | | | | |
| ~~81~~ | | | 101 | 77.00 | | | | |
| 81 | | | 102 | 15.45 | | | | |
| 82 | 27.13 | | 103 | 16.03 | | | | |
| 83 | 15.00 | | 104 | 25.14 | | | | |
| 84 | 16.46 | | 105 | 51.45 | | | | |
| 85 | 15.68 | | 106 | 9.36 | | | | |

| | | |
|---|---|---|
| TEST CONDUCTED FOR: NASA, OFFICE OF ADVANCED RESEARCH AND TECHNOLOGY | | DATE: 4-6-65 |
| TEST: INITIAL MEAS-DC PARAMETER CHARACTERISTICS | SAMPLE NUMBER: NOTED | BAROM. PRESS. IN. HG. |
| PART NAME & NUMBER: DTL NAND/NOR GATE - SC 736 | TEST MEDIUM: AIR | WET BULB TEMP. 60°F |
| MANUFACTURER: B | TEST TEMP. 74° C. ☐ F. ☒ | DRY BULB TEMP. 74°F |
| ENGINEER | TECHNICIAN | INSPECTOR |
| REF. SPEC. | | DATA SHEET NUMBER |

JOB NUMBER A0-138-AE PAGE OF TEST REPORT NO. TR1-1188

601-2
1/64

GENERAL PRECISION, INC.
LIBRASCOPE GROUP

# ENVIRONMENTAL LABORATORY DATA SHEET

## GROUP I - INSTRUMENTATION CONTROL

CALIBRATION CHECK - BREAKDOWN VOLTAGE AT 1UA

| CALIBRATION RESISTOR | VOLTAGE - FULL SCALE = 100 VOLTS | | |
|---|---|---|---|
| 20 MEG | 2004 ' | 2003 ' | 2004 ' |
| 10 MEG | 0999 ' | 0999 ' | 0999 ' |
| 5 MEG | 0497 ' | 0498 ' | 0498 ' |

| SAMPLE NUMBER | VOLTAGE - FULL SCALE = 100 VOLTS | | | |
|---|---|---|---|---|
| | BV7 | BV8 | BV9 | BVCBO |
| 1 | 2684 ' | 2676 ' | 2685 ' | 2259 ' |
| 2 | 2528 ' | 2513 ' | 2507 ' | 1905 ' |
| 3 | 2595 ' | 2634 ' | 2642 ' | 2545 ' |
| 4 | 2710 ' | 2693 ' | 2707 ' | 2645 ' |
| 5' | 2438 ' | 2446 ' | 2429 ' | 1987 ' |

| | | | |
|---|---|---|---|
| TEST CONDUCTED FOR: NASA, OFFICE OF ADVANCED RESEARCH AND TECHNOLOGY | | | DATE: 4-15-65 |
| TEST: POST-240 HR. MEAS. | SAMPLE NUMBER: NOTED | | BAROM. PRESS. 30.13 IN. HG. |
| PART NAME & NUMBER: DTL NAND/NOR GATE - SC 736 | TEST MEDIUM: AIR | | WET BULB TEMP. 62°F |
| MANUFACTURER: B | TEST TEMP. 74° | C. ☐ F. ☒ | DRY BULB TEMP. 74°F |
| ENGINEER | TECHNICIAN: T.E. Hasbrouck | INSPECTOR | |
| REF. SPEC. | | DATA SHEET NUMBER | |

JOB NUMBER A0-138-AE PAGE OF TEST REPORT NO. TR1-1188

691-2
3/64

GENERAL PRECISION, INC.
LIBRASCOPE GROUP

# ENVIRONMENTAL LABORATORY DATA SHEET

GROUP IV - TEMP STEP STRESS GROUP

| SAMPLE NUMBER | BV7 | VOLTAGE - FULL SCALE = 100 VOLTS BV8 | BV9 | BVCBO |
|---|---|---|---|---|
| 66 | 3095 ' | 3106 ' | 3149 ' | 3044 ' |
| 67 | 2989 ' | 2992 ' | 3003 ' | 3022 ' |
| 68 | 3005 ' | 3076 ' | 3090 ' | 3035 ' |
| 69 | 3025 ' | 3049 ' | 3051 ' | 2743 ' |
| 70 | 2989 ' | 2982 ' | 3015 ' | 2940 ' |
| 71 | 2912 ' | 2917 ' | 2891 ' | 2761 ' |
| 72 | 2784 ' | 2842 ' | 2837 ' | 2729 ' |
| 73 | 3036 ' | 3035 ' | 3034 ' | 3006 ' |
| 74 | 2994 ' | 2996 ' | 3002 ' | 1171 ' |
| 75 | 3150 ' | 3123 ' | 0881 ' | 3005 ' |
| 76 | 2973 ' | 2980 ' | 2909 ' | 1713 ' |
| 77 | 2846 ' | 2849 ' | 2845 ' | 1978 ' |
| 78 | 2814 ' | 2840 ' | 2836 ' | 2792 ' |
| 79 | 3016 ' | 2996 ' | 3024 ' | 3025 ' |
| 80' | 2975 ' | 2983 ' | 3012 ' | 2967 ' |

| | | | |
|---|---|---|---|
| TEST CONDUCTED FOR: NASA OFFICE OF ADVANCED RESEARCH AND TECHNOLOGY | | | DATE: 4-15-65 |
| TEST: POST-240HR MEAS. | SAMPLE NUMBER: NOTED | | BAROM. PRESS.: 30.13 IN. HG. |
| PART NAME & NUMBER: DTL NAND/NOR GATE-SC736 | TEST MEDIUM: AIR | | WET BULB TEMP.: 62°F |
| MANUFACTURER: B | TEST TEMP.: 74° | C. ☐ F. ☒ | DRY BULB TEMP.: 74°F |
| ENGINEER | TECHNICIAN | INSPECTOR | |
| REF. SPEC. | | DATA SHEET NUMBER | |

JOB NUMBER A0-138-AE PAGE OF TEST REPORT NO.

681-2
1/64

GENERAL PRECISION, INC.
LIBRASCOPE GROUP

# ENVIRONMENTAL LABORATORY DATA SHEET

GROUP IV - TEMP STEP STRESS GROUP

| SAMPLE NUMBER | VOLTAGE - FULL SCALE = 100 VOLTS BV7 | BV8 | BV9 | BVCBO |
|---|---|---|---|---|
| 81 | 2639 ' | 2598 ' | 2631 ' | 2590 ' |
| 82 | 2876 ' | 2771 ' | 2866 ' | 2828 ' |
| 83 | 2859 ' | 2882 ' | 2879 ' | 1903 ' |
| 84 | 3139 ' | 3122 ' | 3161 ' | 3118 ' |
| 85 | 3028 ' | 3066 ' | 3068 ' | 2897 ' |
| 86 | 3064 ' | 3072 ' | 3032 ' | 3013 ' |
| 87 | 2942 ' | 2938 ' | 2946 ' | 2621 ' |
| 88 | 3085 ' | 3086 ' | 3136 ' | 3033 ' |
| 89 | 2940 ' | 2941 ' | 2941 ' | 2677 ' |
| 90 | 3066 ' | 3112 ' | 3117 ' | 2272 ' |
| 91 | 2860 ' | 2890 ' | 2918 ' | 2872 ' |
| 92 | 2856 ' | 2865 ' | 2892 ' | 2864 ' |
| 93 | 2960 ' | 2961 ' | 3004 ' | 3030 ' |
| 94 | 3003 ' | 3028 ' | 3023 ' | 2980 ' |
| 95 | 3026 ' | 3076 ' | 3133 ' | 2616 ' |
| 96 | 2845 ' | 2800 ' | 2784 ' | 2677 ' |
| 97 | 2848 ' | 2847 ' | 2839 ' | 2840 ' |
| 98 | 2973 ' | 3016 ' | 3017 ' | 1027 ' |
| 99 | 2980 ' | 2993 ' | 2975 ' | 2897 ' |
| 100' | 2965 ' | 2963 ' | 2966 ' | 2439 ' |

| | | | |
|---|---|---|---|
| TEST CONDUCTED FOR: NASA, OFFICE OF ADVANCED RESEARCH AND TECHNOLOGY | | | DATE: 4-15-65 |
| TEST: POST - 240 HR. MEAS. | SAMPLE NUMBER: NOTED | | BAROM. PRESS.: 30.13 IN. HG. |
| PART NAME & NUMBER: DTL NAND/NOR GATE - SC736 | TEST MEDIUM: AIR | | WET BULB TEMP.: 62 °F |
| MANUFACTURER: B | TEST TEMP.: 74° | C. ☐ F. ☒ | DRY BULB TEMP.: 74°F |
| ENGINEER: | TECHNICIAN: T. Nakano | INSPECTOR: | |
| REF. SPEC.: | | DATA SHEET NUMBER: | |

JOB NUMBER Ao-138-AE PAGE OF TEST REPORT NO. TR1-1188

601-2
1/64

GENERAL PRECISION, INC.
LIBRASCOPE GROUP

# ENVIRONMENTAL LABORATORY DATA SHEET

## GROUP IV - TEMP STEP STRESS GROUP

VOLTAGE - FULL SCALE = 100 VOLTS

| SAMPLE NUMBER | BV7 | BV8 | BV9 | BVCBO |
|---|---|---|---|---|
| 101 | 3046 ' | 3077 ' | 3110 ' | 3091 ' |
| 102 | 3097 ' | 3152 ' | 3153 ' | 2772 ' |
| 103 | 3129 ' | 3114 ' | 3094 ' | 2950 ' |
| 104 | 3029 ' | 3048 ' | 3047 ' | 1610 ' |
| 105 | 3114 ' | 3093 ' | 3074 ' | 3079 ' |
| 106 | 3088 ' | 3090 ' | 3111 ' | 2146 ' |
| 107 | 2900 ' | 2827 ' | 2934 ' | 1239 ' |
| 108 | 2863 ' | 2960 ' | 2954 ' | 1812 ' |
| 109 | 3000 ' | 3032 ' | 3022 ' | 2102 ' |
| 110 | 3025 ' | 3029 ' | 3036 ' | 1751 ' |
| 111 | 3174 ' | 3132 ' | 3150 ' | 2804 ' |
| 112 | 2852 ' | 2854 ' | 2856 ' | 2853 ' |
| 113 | 2978 ' | 2945 ' | 2988 ' | 1806 ' |
| 114 | 3075 ' | 3092 ' | 3059 ' | 2777 ' |
| 115 | 3162 ' | 3164 ' | 3183 ' | 2912 ' |

## CALIBRATION CHECK

VOLTAGE - FULL SCALE = 100 VOLTS

| CALIBRATION RESISTOR | | | |
|---|---|---|---|
| 20 MEG | 2004 ' | 2004 ' | 2003 ' |
| 10 MEG | 0998 ' | 0999 ' | 0998 ' |
| 5 MEG ' | 0497 ' | 0497 ' | 0497 ' |

| | | | |
|---|---|---|---|
| TEST CONDUCTED FOR: NASA OFFICE OF ADVANCED RESEARCH AND TECHNOLOGY | | | DATE: 4/15/65 |
| TEST: POST - 240 HR MEAS. | SAMPLE NUMBER: NOTED | | BAROM. PRESS.: 30.13 IN. HG. |
| PART NAME & NUMBER: DTL NAND/NOR GATE - SC 736 | TEST MEDIUM: AIR | | WET BULB TEMP.: 62 °F |
| MANUFACTURER: B | TEST TEMP.: 74° C. ☐ F. ☒ | | DRY BULB TEMP.: 74 °F |
| ENGINEER: | TECHNICIAN: R E Haskins | INSPECTOR: | |
| REF. SPEC.: | | DATA SHEET NUMBER: | |

JOB NUMBER A0-138-AE PAGE OF TEST REPORT NO. TR1-1188

GPI-3
1/64

GENERAL PRECISION, INC.
LIBRASCOPE GROUP

# ENVIRONMENTAL LABORATORY DATA SHEET

GROUP I - INSTRUMENTATION CONTROL

PARAMETER: LEAKAGE CURRENT AT 4 VOLTS
CALIBRATION CHECK WITH 10 MEG

| CALIBRATION VOLTAGE | CURRENT - FULL SCALE = 100 NA | | |
|---|---|---|---|
| 1.0 V | 1000 ' | 1000 ' | 1000 ' |
| 0.5 V | 0496 ' | 0495 ' | 0496 ' |

CURRENT - FULL SCALE = 10 NA

0.10 V
0.05 V

| SAMPLE NUMBER | LEAKAGE CURRENT - FULL SCALE = 100 NA | | | | |
|---|---|---|---|---|---|
| | I7 | I8 | I9 | ICBO | I3 |
| 1 | 0038 ' | 0036 ' | 0038 ' | 0066 ' | 0073 ' |
| 2 | 0047 ' | 0062 ' | 0047 ' | 0087 ' | 0101 ' |
| 3 | 0065 ' | 0063 ' | 0062 ' | 0138 ' | 0160 ' |
| 4 | 0027 ' | 0029 ' | 0027 ' | 0049 ' | 0057 ' |
| 5' | 0103 ' | 0113 ' | 0114 ' | 1086 ' | 1123 ' |

| | | | |
|---|---|---|---|
| TEST CONDUCTED FOR: NASA, OFFICE OF ADVANCED RESEARCH AND TECHNOLOGY | | | DATE: 4-15-65 |
| TEST: POST - 240 HR MEAS. | SAMPLE NUMBER: NOTED | | BAROM. PRESS.: 30.13 IN. HG. |
| PART NAME & NUMBER: DTL NAND/NOR GATE - SC736 | TEST MEDIUM: AIR | | WET BULB TEMP.: 62°F |
| MANUFACTURER: B | TEST TEMP.: 74° | C. ☐ F. ☒ | DRY BULB TEMP.: 74°F |
| ENGINEER: | TECHNICIAN: T. Hopkins | INSPECTOR: | |
| REF. SPEC.: | | DATA SHEET NUMBER: | |

JOB NUMBER A0-138-AE PAGE OF TEST REPORT NO. TR1-1188

001-2
1/64

GENERAL PRECISION, INC.
LIBRASCOPE GROUP

# ENVIRONMENTAL LABORATORY DATA SHEET

GROUP IV - TEMP STEP STRESS GROUP

PARAMETER: LEAKAGE CURRENT AT 4 VOLTS

| SAMPLE NUMBER | CURRENT - FULL SCALE = 100 NA I7 | I8 | I9 | ICBO | I3 |
|---|---|---|---|---|---|
| 66 | 0034 ' | 0031 ' | 0033 ' | 0059 ' | 0062 ' |
| 67 | 0012 ' | 0011 ' | 0011 ' | 0032 ' | 0035 ' |
| 68 | 0027 ' | 0027 ' | 0030 ' | 0062 ' | 0062 ' |
| 69 | 0026 ' | 0026 ' | 0025 ' | 0080 ' | 0053 ' |
| 70 | 0025 ' | 0022 ' | 0022 ' | 0046 ' | 0050 ' |
| 71 | 0022 ' | 0022 ' | 0023 ' | 0052 ' | 0051 ' |
| 72 | 0025 ' | 0025 ' | 0025 ' | 0046 ' | 0054 ' |
| 73 | 0010 ' | 0011 ' | 0010 ' | 0079 ' | 0034 ' |
| 74 | 0040 ' | 0023 ' | 0059 ' | 0050 ' | 0050 ' |
| 75 | 0026 ' | 0025 ' | 0020 ' | 0046 ' | 0059 ' |
| 76 | 0027 ' | 0017 ' | 0022 ' | 0045 ' | 0050 ' |
| 77 | 0020 ' | 0022 ' | 0076 ' | 0045 ' | 0052 ' |
| 78 | 0059 ' | 0010 ' | 0010 ' | 0036 ' | 0045 ' |
| 79 | 0011 ' | 0012 ' | 0013 ' | 0025 ' | 0095 ' |
| 80' | 0010 ' | 0010 ' | 0020 ' | 0018 ' | 0035 ' |

| | | |
|---|---|---|
| TEST CONDUCTED FOR: NASA, OFFICE OF ADVANCED RESEARCH AND TECHNOLOGY | | DATE: 4-15-65 |
| TEST: POST - 240 HR MEAS. | SAMPLE NUMBER: NOTED | BAROM PRESS: 30.13 IN. HG |
| PART NAME & NUMBER: DTL NAND/NOR GATE - SC 736 | TEST MEDIUM: AIR | WET BULB TEMP.: 62°F |
| MANUFACTURER: B | TEST TEMP.: 74° C. ☐ F. ☒ | DRY BULB TEMP.: 74°F |
| ENGINEER | TECHNICIAN: [illegible] | INSPECTOR |
| REF. SPEC. | | DATA SHEET NUMBER |

JOB NUMBER AA-138-AE PAGE OF TEST REPORT NO. TR 1-1188

601-2
1/64

GENERAL PRECISION, INC.
LIBRASCOPE GROUP

# ENVIRONMENTAL LABORATORY DATA SHEET

GROUP IV - TEMP STEP STRESS GROUP

PARAMETER: LEAKAGE CURRENT AT 4 VOLTS

| SAMPLE NUMBER | CURRENT - FULL SCALE = .100 NA I7 | I8 | I9 | ICBO | I3 |
|---|---|---|---|---|---|
| 81 | 0026 ' | 0025 ' | 0026 ' | 0050 ' | 0055 ' |
| 82 | 0010 ' | 0010 ' | 0010 ' | 0025 ' | 0038 ' |
| 83 | 0022 ' | 0022 ' | 0023 ' | 0024 ' | 0048 ' |
| 84 | 0027 ' | 0024 ' | 0026 ' | 0056 ' | 0056 ' |
| 85 | 0024 ' | 0025 ' | 0024 ' | 0047 ' | 0054 ' |
| 86 | 0031 ' | 0027 ' | 0028 ' | 0055 ' | 0060 ' |
| 87 | 0028 ' | 0027 ' | 0028 ' | 0058 ' | 0064 ' |
| 88 | 0027 ' | 0027 ' | 0005 ' | 0060 ' | 0056 ' |
| 89 | 0026 ' | 0027 ' | 0027 ' | 0061 ' | 0062 ' |
| 90 | 0028 ' | 0026 ' | 0028 ' | 0054 ' | 0054 ' |
| 91 | 0011 ' | 0009 ' | 0008 ' | 0016 ' | 0033 ' |
| 92 | 0009 ' | 0009 ' | 0008 ' | 0021 ' | 0036 ' |
| 93 | 0015 ' | 0016 ' | 0013 ' | 0025 ' | 0033 ' |
| 94 | 0023 ' | 0023 ' | 0024 ' | 0048 ' | 0050 ' |
| 95 | 0024 ' | 0024 ' | 0026 ' | 0047 ' | 0049 ' |
| 96 | 0025 ' | 0025 ' | 0024 ' | 0045 ' | 0055 ' |
| 97 | 0010 ' | 0009 ' | 0010 ' | 0017 ' | 0032 ' |
| 98 | 0023 ' | 0022 ' | 0059 ' | 0045 ' | 0070 ' |
| 99 | 0026 ' | 0025 ' | 0027 ' | 0056 ' | 0055 ' |
| 100' | 0062 ' | 0024 ' | 0020 ' | 0032 ' | 0057 ' |

| | | | |
|---|---|---|---|
| TEST CONDUCTED FOR: NASA, OFFICE OF ADVANCED RESEARCH AND TECHNOLOGY | | | DATE: 4-15-65 |
| TEST: POST - 240 HR MEAS. | SAMPLE NUMBER: NOTED | | BAROM. PRESS.: 30.13 IN. HG. |
| PART NAME & NUMBER: DTL NAND/NOR GATE - SC936 | TEST MEDIUM: AIR | | WET BULB TEMP.: 62°F |
| MANUFACTURER: B | TEST TEMP.: 74° | C. ☐ F. ☒ | DRY BULB TEMP.: 74°F |
| ENGINEER | TECHNICIAN: F E Haskins | INSPECTOR | |
| REF. SPEC. | | DATA SHEET NUMBER | |

JOB NUMBER Ao-138-AE PAGE OF TEST REPORT NO. TR 1-1188

601-2
1/64

GENERAL PRECISION, INC.
LIBRASCOPE GROUP

# ENVIRONMENTAL LABORATORY DATA SHEET

GROUP IV - TEMP STEP STRESS GROUP

PARAMETER: LEAKAGE CURRENT AT 4 VOLTS

| SAMPLE NUMBER | CURRENT - FULL SCALE = 100 NA I7 | I8 | I9 | ICBO | I3 |
|---|---|---|---|---|---|
| 101 | 0034 ' | 0032 ' | 0038 ' | 0069 ' | 0072 ' |
| 102 | 0025 ' | 0026 ' | 0026 ' | 0043 ' | 0051 ' |
| 103 | 0025 ' | 0026 ' | 0029 ' | 0053 ' | 0054 ' |
| 104 | 0024 ' | 0027 ' | 0072 ' | 0050 ' | 0052 ' |
| 105 | 0031 ' | 0035 ' | 0040 ' | 0035 ' | 0072 ' |
| 106 | 0024 ' | 0024 ' | 0025 ' | 0039 ' | 0052 ' |
| 107 | 0026 ' | 0039 ' | 0029 ' | 0048 ' | 0056 ' |
| 108 | 0026 ' | 0026 ' | 0025 ' | 0027 ' | 0057 ' |
| 109 | 0024 ' | 0025 ' | 0070 ' | 0047 ' | 0053 ' |
| 110 | 0028 ' | 0029 ' | 0031 ' | 0057 ' | 0068 ' |
| 111 | 0030 ' | 0079 ' | 0034 ' | 0051 ' | 0100 ' |
| 112 | 0022 ' | 0011 ' | 0012 ' | 0010 ' | 0031 ' |
| 113 | 0050 ' | 0022 ' | 0025 ' | 0100 ' | 0050 ' |
| 114 | 0062 ' | 0029 ' | 0044 ' | 0049 ' | 0059 ' |
| 115 | 0027 ' | 0059 ' | 0027 ' | 0062 ' | 0054 ' |

CALIBRATION CHECK - 100 NA

| CALIBRATION VOLTAGE | | | |
|---|---|---|---|
| 1.0 V | 1000 ' | 1000 ' | 1002 ' |
| 0.5 V | 0493 ' | 0491 ' | 0495 ' |

| | | | |
|---|---|---|---|
| TEST CONDUCTED FOR: NASA, OFFICE OF ADVANCED RESEARCH AND TECHNOLOGY | | | DATE: 4-15-65 |
| TEST: POST - 240 HR MEAS. | SAMPLE NUMBER: NOTED | | BAROM PRESS.: 30.13 IN. HG. |
| PART NAME & NUMBER: DTL NAND/NOR GATE - SC 736 | TEST MEDIUM: AIR | | WET BULB TEMP.: 62°F |
| MANUFACTURER: B | TEST TEMP.: 74° | C. ☐ F. ☒ | DRY BULB TEMP.: 74°F |
| ENGINEER | TECHNICIAN: [illegible] | INSPECTOR | |
| REF. SPEC. | | DATA SHEET NUMBER | |

JOB NUMBER A0-138-AE PAGE OF TEST REPORT NO. TR1-1188

601-2
1/64

GENERAL PRECISION, INC.
LIBRASCOPE GROUP

# ENVIRONMENTAL LABORATORY DATA SHEET

GROUP I - INSTRUMENTATION CONTROL

PARAMETER: RESISTANCE MEASUREMENTS AT 1 MA

CALIBRATION CHECK AT 1 MA

| CALIBRATION RESISTOR | VOLTAGE - FULL SCALE = 100 VOLTS | | |
|---|---|---|---|
| 2000 OHMS | 0200 | 0200 | 0200 |
| 1000 OHMS | 0099 | 0099 | 0099 |
| 500 OHMS | 0050 | 0050 | 0050 |

| SAMPLE NUMBER | RESISTANCE - FULL SCALE = 100K OHMS | | |
|---|---|---|---|
| | R1 | R2 | R3 |
| 1 | 0191 | 0172 | 2149 |
| 2 | 0214 | 0189 | 2373 |
| 3 | 0204 | 0196 | 2388 |
| 4 | 0195 | 0184 | 2285 |
| 5' | 0209 | 0196 | 2403 |

| | | |
|---|---|---|
| TEST CONDUCTED FOR: NASA, OFFICE OF ADVANCED RESEARCH AND TECHNOLOGY | | DATE: 4-19-65 |
| TEST: POST-240 HR MEAS | SAMPLE NUMBER: NOTED | BAROM. PRESS. IN. HG. |
| PART NAME & NUMBER: DTL NAND/NOR GATE-SC 736 | TEST MEDIUM: AIR | WET BULB TEMP. 61°F |
| MANUFACTURER: B | TEST TEMP. 74° C. ☐ F. ☒ | DRY BULB TEMP. 74°F |
| ENGINEER: TECHNICIAN: C. Cuhen | INSPECTOR: | |
| REF. SPEC. | DATA SHEET NUMBER | |

JOB NUMBER AO-138-AE PAGE OF TEST REPORT NO. TR1-1188

401-2
1/64

GENERAL PRECISION, INC.
LIBRASCOPE GROUP

# ENVIRONMENTAL LABORATORY DATA SHEET

GROUP IV - TEMP STEP STRESS GROUP

PARAMETER: RESISTANCE MEASUREMENTS AT 1 MA

| SAMPLE number | R1 | RESISTANCE - FULL SCALE,= 100K ohms R2 | R3 |
|---|---|---|---|
| 66 | 0182 | 0187 | 2048 |
| 67 | 0208 | 0218 | 2524 |
| 68 | 0168 | 0175 | 1894 |
| 69 | 0189 | 0193 | 2118 |
| 70 | 0186 | 0192 | 2210 |
| 71 | 0187 | 0185 | 1947 |
| 72 | 0166 | 0173 | 1827 |
| 73 | 0192 | 0193 | 2092 |
| 74 | 0203 | 0202 | 2175 |
| 75 | 0179 | 0186 | 2005 |
| 76 | 0201 | 0202 | 2160 |
| 77 | 0184 | 0220 | 1931 |
| 78 | 0179 | 0177 | 1812 |
| 79 | 0208 | 0211 | 2412 |
| 80' | 0191 | 0192 | 2113 |

| | | |
|---|---|---|
| TEST CONDUCTED FOR: NASA, OFFICE OF ADVANCED RESEARCH AND TECHNOLOGY | | DATE: 4-19-65 |
| TEST: POST - 240 HR MEAS. | SAMPLE NUMBER: Noted | BAROM. PRESS. IN. HG. |
| PART NAME & NUMBER: DTL NAND/NOR GATE - SC736 | TEST MEDIUM: Air | WET BULB TEMP. 61°F |
| MANUFACTURER: B | TEST TEMP. 74 C. ☐ F. ☑ | DRY BULB TEMP. 74°F |
| ENGINEER | TECHNICIAN: C. Cuhra | INSPECTOR |
| REF. SPEC. | | DATA SHEET NUMBER |

JOB NUMBER Ao-138-AE PAGE OF TEST REPORT NO. TR1-1188

601-2
1/64

GENERAL PRECISION, INC.
LIBRASCOPE GROUP

# ENVIRONMENTAL LABORATORY DATA SHEET

GROUP IV - TEMPXSTEP STRESS GROUP

PARAMETER: RESISTANCE MEASUREMENTS AT 1 MA

| SAMPLE NUMBER | R1 | RESISTANCE - FULL SCALE = 100 K OHMS R2 | R3 |
|---|---|---|---|
| 81 | 0172 | 0156 | 1881 |
| 82 | 0175 | 0181 | 1881 |
| 83 | 0180 | 0183 | 1919 |
| 84 | 0193 | 0200 | 2283 |
| 85 | 0211 | 0212 | 2462 |
| 86 | 0177 | 0177 | 1889 |
| 87 | 0189 | 0198 | 2102 |
| 88 | 0200 | 0204 | 2396y |
| 89 | 0187 | 0196 | 2132 |
| 90 | 0175 | 0193 | 2118 |
| 91 | 0212 | 0218 | 2277 |
| 92 | 0196 | 0205 | 2281 |
| 93 | 0204 | 0204 | 2244 |
| 94 | 0190 | 0194 | 2081 |
| 95 | 0182 | 0186 | 2018 |
| 96 | 0165 | 0171 | 1826 |
| 97 | 0174 | 0176 | 1853 |
| 98 | 0188 | 0189 | 2015 |
| 99 | 0191 | 0200 | 2213 |
| 100' | 0186 | 0197 | 2141' |

| | | |
|---|---|---|
| TEST CONDUCTED FOR: NASA, OFFICE OF ADVANCED RESEARCH AND TECHNOLOGY | | DATE: 4-19-65 |
| TEST: POST - 240 HR MEAS. | SAMPLE NUMBER: 11-TEC | BAROM PRESS. IN. HG. |
| PART NAME & NUMBER: DTL NAND/NOR GATE - SC 736 | TEST MEDIUM: AIR | WET BULB TEMP. 61°F |
| MANUFACTURER: B | TEST TEMP. 74° C. ☐ F. ☑ | DRY BULB TEMP. 74°F |
| ENGINEER | TECHNICIAN: C. Cadra | INSPECTOR |
| REF. SPEC. | | DATA SHEET NUMBER |

JOB NUMBER Ao-138-AF PAGE OF TEST REPORT NO. TR1-1188

401-2
1/64

GENERAL PRECISION, INC.
LIBRASCOPE GROUP

# ENVIRONMENTAL LABORATORY DATA SHEET

GROUP I - INSTRUMENTATION CONTROL

CALIBRATION: CURRENT FULL SCALE = 10 MA
RESISTOR

| | | | |
|---|---|---|---|
| 2000 OHMS | 1993 | 1990 | 1991 |
| 1000 OHMS | 3990 | 3993 | 3997 |

PARAMETER: DIODE FORWARD CURRENT WITH V10 = 4 VOLTS

SAMPLE NUMBER — CURRENT FULL SCALE = 10 MA

| | If7 | If8 | If9 |
|---|---|---|---|
| 1 | 1847 | 1850 | 1842 |
| 2 | 1685 | 1687 | 1684 |
| 3 | 1622 | 1623 | 1620 |
| 4 | 1721 | 1718 | 1723 |
| 5' | 1624 | 1621 | 1623 |

| | | |
|---|---|---|
| TEST CONDUCTED FOR: NASA OFFICE OF ADVANCED RESEARCH AND TECHNOLOGY | | DATE: 4-20-65 |
| TEST: PAST-240 HR. MEAS. | SAMPLE NUMBER: NOTED | BAROM. PRESS. HG. MG. |
| PART NAME & NUMBER: DTL NAND/NOR GATE - SC736 | TEST MEDIUM: AIR | WET BULB TEMP.: 61°F |
| MANUFACTURER: B | TEST TEMP.: 74° C. ☐ F. ☑ | DRY BULB TEMP.: 74°F |
| ENGINEER: | TECHNICIAN: C. Cabra | INSPECTOR: |
| REF. SPEC.: | | DATA SHEET NUMBER: |

JOB NUMBER AO-198-AE PAGE OF TEST REPORT NO. TR1-1188

601-2
1/64

GENERAL PRECISION, INC.
LIBRASCOPE GROUP

# ENVIRONMENTAL LABORATORY DATA SHEET

GROUP IV - TEMP STEP STRESS GROUP

PARAMETER: DIODE FORWARD CURRENT WITH V6 = 4 VOLTS

| SAMPLE NUMBER | CURRENT - FULL SCALE ≐ 10 MA If7 | If8 | If9 |
|---|---|---|---|
| 66 | 1693 | 1702 | 1692 |
| 67 | 1439 | 1440 | 1438 |
| 68 | 1804 | 1802 | 1796 |
| 69 | 1630 | 1627 | 1624 |
| 70 | 1634 | 1637 | 1633 |
| 71 | 1701 | 1704 | 1702 |
| 72 | 1819 | 1817 | 1818 |
| 73 | 1623 | 1622 | 1618 |
| 74 | 1558 | 1554 | 1553 |
| 75 | 1684 | 1683 | 1687 |
| 76 | 1553 | 1562 | 1560 |
| 77 | 1433 | 1435 | 1437 |
| 78 | 1788 | 1789 | 1785 |
| 79 | 1487 | 1486 | 1493 |
| 80'0 | 1627 | 1627 | 1628 |

| | | |
|---|---|---|
| TEST CONDUCTED FOR: NASA OFFICE OF ADVANCED RESEARCH AND TECHNOLOGY | | DATE: 4-20-65 |
| TEST: POST - 240 HR MEAS | SAMPLE NUMBER: NOTED | BAROM. PRESS. IN. HG. |
| PART NAME & NUMBER: DTL NAND/NOR GATE - SC736 | TEST MEDIUM: AIR | WET BULB TEMP. 61°F |
| MANUFACTURER: B | TEST TEMP. 240 C. ☐ F. ☐ | DRY BULB TEMP. 24°F |
| ENGINEER | TECHNICIAN: C. Carter | INSPECTOR |
| REF. SPEC. | | DATA SHEET NUMBER |

JOB NUMBER AO-138-AE PAGE OF TEST REPORT NO. TR1-1188

601-2
1/64

GENERAL PRECISION, INC.
LIBRASCOPE GROUP

# ENVIRONMENTAL LABORATORY DATA SHEET

GROUP IV- TEMP STEP STRESS GROUP

PARAMETER: DIODE FORWARD CURRENT WITH V6 = 4 VOLTS

CURRENT - FULL SCALE = 10 MA

| SAMPLE NUMBER | If7 | If8 | If9 |
|---|---|---|---|
| 81 | 2176 | 2168 | 2170 |
| 82 | 1737 | 1739 | 1736 |
| 83 | 1727 | 1723 | 1719 |
| 84 | 1572 | 1574 | 1575 |
| 85 | 1484 | 1487 | 1486 |
| 86 | 1778 | 1779 | 1780 |
| 87 | 1604 | 1601 | 1599 |
| 88 | 1544 | 1543 | open |
| 89 | 1606 | 1610 | 1611 |
| 90 | 1639 | 1633 | 1630 |
| 91 | 1439 | 1441 | 1439 |
| 92 | 1533 | 1531 | 1537 |
| 93 | 1535 | 1533 | 1537 |
| 94 | 1619 | 1634 | 1635 |
| 95 | 1701 | 1701 | 1703 |
| 96 | 1857 | 1854 | 1856 |
| 97 | 1805 | 1806 | 1810 |
| 98 | 1679 | 1677 | 1685 |
| 99 | 1586 | 1592 | 1598 |
| 100' | 1605 | 1618 | 1617 |

| | | |
|---|---|---|
| TEST CONDUCTED FOR: NASA OFFICE OF ADVANCED RESEARCH AND TECHNOLOGY | | DATE: 4-20-65 |
| TEST: POST-240 HR MEAS. | SAMPLE NUMBER: 1 (7ED) | BAROM. PRESS. IN. HG. |
| PART NAME & NUMBER: DTL NAND/NOR GATE - SC736 | TEST MEDIUM: AIR | WET BULB TEMP. 61°F |
| MANUFACTURER: B | TEST TEMP. 74°C C. ☐ F. ☐ | DRY BULB TEMP. 74°F |
| ENGINEER | TECHNICIAN: C. Cole | INSPECTOR |
| REF. SPEC. | | DATA SHEET NUMBER |

JOB NUMBER A0-138-AE PAGE OF TEST REPORT NO. TR 1-1188

601-2
1/64

GENERAL PRECISION, INC.
LIBRASCOPE GROUP

# ENVIRONMENTAL LABORATORY DATA SHEET

GROUP IV - TEMP STEP STRESS GROUP

PARAMETER: DIODE FORWARD CURRENT WITH V6 = 4 VOLTS

| SAMPLE NUMBER | If7 | CURRENT - FULL SCALE = 10 MA IF8 | If9 |
|---|---|---|---|
| 101 | 1788 | 1794 | 1798 |
| 102 | 1624 | 1620 | 1627 |
| 103 | 1503 | 1502 | 1498 |
| 104 | 1696 | 1696 | 1692 |
| 105 | 1848 | 1850 | 1854 |
| 106 | 1644 | 1643 | 1649 |
| 107 | 1752 | 1747 | 1750 |
| 108 | 1647 | 1648 | 1644 |
| 109 | 1596 | 1598 | 1598 |
| 110 | 1682 | 1685 | 1680 |
| 111 | 1670 | 1675 | 1677 |
| 112 | 1681 | 1678 | 1677 |
| 113 | 1541 | 1543 | 1538 |
| 114 | 1630 | 1634 | 1635 |
| 115 | 1639 | 1635 | 1637 |

CALIBRATION CHECK

| CALIBRATION RESISTOR | | CURRENT - FULL SCALE = 10 MA | |
|---|---|---|---|
| 2000 OHMS | 1997 | 2003 | 2001 |
| 1000 OHMS' | 4009 | 4010 | 4013 |

| | | |
|---|---|---|
| TEST CONDUCTED FOR: NASA, OFFICE OF ADVANCED RESEARCH AND TECHNOLOGY | | DATE: 4-20-65 |
| TEST: POST - 240 HR. MEAS. | SAMPLE NUMBER: ACTL 1) | BAROM. PRESS. IN. HG. |
| PART NAME & NUMBER: DTL NAND/NOR GATE - SC736 | TEST MEDIUM: AIR | WET BULB TEMP. 61°F |
| MANUFACTURER: B | TEST TEMP. 70°C ☐ C. ☐ F. | DRY BULB TEMP. 74°F |
| ENGINEER: | TECHNICIAN: C. Eichler | INSPECTOR: |
| REF. SPEC. | | DATA SHEET NUMBER |

JOB NUMBER BO-138-AE PAGE OF TEST REPORT NO. TR1-1188

601-2
1/64

GENERAL PRECISION, INC.
LIBRASCOPE GROUP

# ENVIRONMENTAL LABORATORY DATA SHEET

GROUP I - INSTRUMENTATION CONTROL

PARAMETER: OUTPUT SATURATION VOLTAGE AT Ic = 10 MA - Ib = 1 MA

CALIBRATION CHECK AT Ic = 10MA - Ib = 1 MA

| CALIBRATION RESISTOR | | VOLTAGE - FULL SCALE = 10 VOLTS | |
|---|---|---|---|
| 500 OHMS | 0500 | 0500 | 0500 |
| 50 OHMS | 0501 | 0501 | 0501 |

| SAMPLE NUMBER | V3 | VOLTAGE - FULL SCALE = 10 VOLTS |
|---|---|---|
| 1 | 0207 | |
| 2 | 0201 | |
| 3 | 0206 | |
| 4 | 0208 | |
| 5' | 0198 | |

| | | |
|---|---|---|
| TEST CONDUCTED FOR: NASA, OFFICE OF ADVANCED RESEARCH AND TECHNOLOGY | | DATE: 4-19-65 |
| TEST: POST-240 HR MEAS. | SAMPLE NUMBER: NOTED | BAROM. PRESS. IN. HG |
| PART NAME & NUMBER: DTL NAND/NOR GATE - SC 736 | TEST MEDIUM: AIR | WET BULB TEMP. 61°F |
| MANUFACTURER: B | TEST TEMP. 74° C. ☐ F. ☑ | DRY BULB TEMP. 74°F |
| ENGINEER | TECHNICIAN: C. Cuber | INSPECTOR |
| REF. SPEC. | | DATA SHEET NUMBER |

JOB NUMBER AD-138-AE PAGE OF TEST REPORT NO. TR1-1188

601-2
1/64

GENERAL PRECISION, INC.
LIBRASCOPE GROUP

# ENVIRONMENTAL LABORATORY DATA SHEET

GROUP IV - TEMP STEP STRESS GROUP

PARAMETER: OUTPUT SATURATION VOLTAGE AT Ic= 10 MA Ib = 1 MA

VOLTAGE - FULL SCALE = 10 VOLTS

| SAMPLE NUMBER | V3 |
|---|---|
| 66 | 0258 |
| 67 | 0298 |
| 68 | 0277 |
| 69 | 0260 |
| 70 | 0253 |
| 71 | 0268 |
| 72 | 0269 |
| 73 | 0306 |
| 74 | 0251 |
| 75 | 0262 |
| 76 | 0245 |
| 77 | 0288 |
| 78 | 0240 |
| 79 | 0307 |
| 80' | 0302 |

| | | |
|---|---|---|
| TEST CONDUCTED FOR: NASA, OFFICE OF ADVANCED RESEARCH AND TECHNOLOGY | | DATE: 4-19-65 |
| TEST: POST-240 HR MEAS. | SAMPLE NUMBER: NOTED | BAROM. PRESS. IN. HG. |
| PART NAME & NUMBER: DTL NAND/NOR GATE - SC736 | TEST MEDIUM: AIR | WET BULB TEMP. 61°F |
| MANUFACTURER: B | TEST TEMP. 74° C. ☐ F. ☑ | DRY BULB TEMP. 74°F |
| ENGINEER | TECHNICIAN: BOLAN | INSPECTOR |
| REF. SPEC. | | DATA SHEET NUMBER |

JOB NUMBER AD-138-AE PAGE OF TEST REPORT NO. TR1-1188

691-2
V64

GENERAL PRECISION, INC.
LIBRASCOPE GROUP

# ENVIRONMENTAL LABORATORY DATA SHEET

GROUP IV - TEMP STEP STRESS GROUP

PARAMETER: OUTPUT SATURATION VOLTAGE AT Ic= 10 MA Ib = 1 MA

VOLTAGE - FULL SCALE = 10 VOLTS

| SAMPLE NUMBER | V3 |
|---|---|
| 81 | 0278 |
| 82 | 0238 |
| 83 | 0267 |
| 84 | 0268 |
| 85 | 0255 |
| 86 | 0273 |
| 87 | 0284 |
| 88 | 0267 |
| 89 | 0270 |
| 90 | 0243 |
| 91 | 0266 |
| 92 | 0278 |
| 93 | 0289 |
| 94 | 0257 |
| 95 | 0251 |
| 96 | 0271 |
| 97 | 0237 |
| 98 | 0227 |
| 99 | 0271 |
| 100' | 0268 |

| | | |
|---|---|---|
| TEST CONDUCTED FOR: NASA, OFFICE OF ADVANCED RESEARCH AND TECHNOLOGY | | DATE: 4-19-65 |
| TEST: POST-140 HR MEAS. | SAMPLE NUMBER: NOTED | BAROM. PRESS. IN. HG. |
| PART NAME & NUMBER: DTL NAND/NOR GATE - SC 736 | TEST MEDIUM: AIR | WET BULB TEMP. 61°F |
| MANUFACTURER: B | TEST TEMP. 74° C. ☐ F. ☒ | DRY BULB TEMP. 74°F |
| ENGINEER | TECHNICIAN: Boland | INSPECTOR |
| REF. SPEC. | | DATA SHEET NUMBER |

JOB NUMBER AO-139-AE PAGE OF TEST REPORT NO. TR1-1189

601-2
1/64

GENERAL PRECISION, INC.
LIBRASCOPE GROUP

# ENVIRONMENTAL LABORATORY DATA SHEET

GROUP IV - TEMP STEP STRESS GROUP

PARAMETER: OUTPUT SATURATION VOLTAGE AT Ic= 10 MA Ib = 1 MA

VOLTAGE - FULL SCALE = 10 VOLTS

| SAMPLE NUMBER | V3 |
|---|---|
| 101 | 0274 |
| 102 | 0250 |
| 103 | 0265 |
| 104 | 0248 |
| 105 | 0289 |
| 106 | 0244 |
| 107 | 0281 |
| 108 | 0247 |
| 109 | 0256 |
| 110 | 0280 |
| 111 | 0255 |
| 112 | 0231 |
| 113 | 0244 |
| 114 | 0258 |
| 115 | 0259 |

CALIBRATION CHECK AT Ic = 10MA - Ib = 1 MA

VOLTAGE - FULL SCALE = 10 VOLTS

| CALIBRATION RESISTOR | | | |
|---|---|---|---|
| 500 OHMS | 0500 | 0500 | 0500 |
| 50 OHMS | 0501 | 0501 | 0501 |

| | | | |
|---|---|---|---|
| TEST CONDUCTED FOR: NASA, OFFICE OF ADVANCED RESEARCH AND TECHNOLOGY | | | DATE: 4-19-65 |
| TEST: POST-240 HR. MEAS | SAMPLE NUMBER: NOTED | | BAROM. PRESS. IN. HG. |
| PART NAME & NUMBER: DTL NAND/NOR GATE - SC 736 | TEST MEDIUM: AIR | | WET BULB TEMP. 61°F |
| MANUFACTURER: B | TEST TEMP. 74° C. ☐ F. ☒ | | DRY BULB TEMP. 74°F |
| ENGINEER | TECHNICIAN: BOGAN | INSPECTOR | |
| REF. SPEC. | | DATA SHEET NUMBER | |

JOB NUMBER A0-138-AE PAGE OF TEST REPORT NO. TR 1-1188

601-2
1/64

GENERAL PRECISION, INC.
LIBRASCOPE GROUP

# ENVIRONMENTAL LABORATORY DATA SHEET

GROUP I - INSTRUMENTATION CONTROL GROUP

PARAMETER: DC CURRENT GAIN VCE= 0.5 VOLTS
IC = 1.0 MA

CALIBRATION: NONE

BASE CURRENT - FULL SCALE = 100UA

| SAMPLE NUMBER | IB1 |
|---|---|
| 1 | 24.52 |
| 2 | 27.63 |
| 3 | 22.08 |
| 4 | 22.54 |
| 5' | 16.68 |

| | | |
|---|---|---|
| TEST CONDUCTED FOR: NASA, OFFICE OF ADVANCED RESEARCH AND TECHNOLOGY | | DATE: 4-22-65 |
| TEST: PAST - 240 HR MEAS. | SAMPLE NUMBER: NOTED | BAROM. PRESS. IN. HG. |
| PART NAME & NUMBER: DTL NAND/NOR GATE - ~~SE104K~~ SC736 | TEST MEDIUM: AIR | WET BULB TEMP. 62°F |
| MANUFACTURER: B | TEST TEMP. 73° C. ☐ F. ☒ | DRY BULB TEMP. 73°F |
| ENGINEER: | TECHNICIAN: C. Cuhrs | INSPECTOR: |
| REF. SPEC. | | DATA SHEET NUMBER |

JOB NUMBER AO-138-AE PAGE OF TEST REPORT NO. TR1-1188

2011
4/65

GENERAL PRECISION, INC.
LIBRASCOPE GROUP

# ENVIRONMENTAL LABORATORY DATA SHEET

GROUP IV - TEMP STEP STRESS GROUP

PARAMETER: DC CURRENT GAIN VCE = 0.5 VOLTS
IC = 1.0 MA

BASE CURRENT - FULL SCALE = 100 UA

| SAMPLE NUMBER | IB |
|---|---|
| 66 | 24.58 |
| 67 | 32.58 |
| 68 | 26.02 |
| 69 | 15.80 |
| 70 | 27.12 |
| 71 | 49.33 |
| 72 | 50.77 |
| 73 | 39.62 |
| 74 | 15.52 |
| 75 | 16.29 |
| 76 | 14.43 |
| 77 | 14.19 |
| 78 | 41.69 |
| 79 | 32.88 |
| 80 | 36.59 |

| | | |
|---|---|---|
| TEST CONDUCTED FOR: NASA, OFFICE OF ADVANCED RESEARCH AND TECHNOLOGY | | DATE: 4-22-65 |
| TEST: POST - 240 HR MEAS. | SAMPLE NUMBER: NOTED | BAROM. PRESS. IN. HG. |
| PART NAME & NUMBER: DTL NAND/NOR GATE - ~~SE 142K~~ SC936 | TEST MEDIUM: AIR | WET BULB TEMP. 62°F |
| MANUFACTURER: B | TEST TEMP. 73° C. ☐ F. ☑ | DRY BULB TEMP. 73°F |
| ENGINEER: | TECHNICIAN: C. Cubas | INSPECTOR: |
| REF. SPEC. | | DATA SHEET NUMBER |

JOB NUMBER AO-138-AE PAGE OF TEST REPORT NO. TR1-1188

2011
4/65

GENERAL PRECISION, INC.
LIBRASCOPE GROUP

# ENVIRONMENTAL LABORATORY DATA SHEET

GROUP IV - TEMP STEP STRESS GROUP

PARAMETER: RESISTANCE MEASUREMENTS AT 1 MA

| SAMPLE NUMBER | R1 | RESISTANCE - FULL SCALE = 100K OHMS R2 | R3 |
|---|---|---|---|
| 101 | 0178 | 0177 | 1924 |
| 102 | 0202 | 0194 | 2269 |
| 103 | 0204 | 0210 | 2473 |
| 104 | 0177 | 0185 | 2008 |
| 105 | 0174 | 0172 | 1824 |
| 106 | 0188 | 0192 | 2100 |
| 107 | 0177 | 0180 | 1853 |
| 108 | 0182 | 0192 | 2080 |
| 109 | 0196 | 0197 | 2147 |
| 110 | 0178 | 0188 | 2002 |
| 111 | 0189 | 0187 | 2032 |
| 112 | 0181 | 0187 | 1939 |
| 113 | 0207 | 0204 | 2216 |
| 114 | 0186 | 0192 | 1391 |
| 115 | 0192 | 0913 | 2124 |

CALIBRATION CHECK

| CALIBRATION RESISTOR | | VOLTAGE - FULL SCALE = 10 0 VOLTS | |
|---|---|---|---|
| 2000 OHMS | 0200 | 0200 | 0200 |
| 1000 OHMS | 0099 | 0099 | 0099 |
| 500 OHMS' | 0050 | 0050 | 0050 |

| | | |
|---|---|---|
| TEST CONDUCTED FOR: NASA OFFICE OF ADVANCED RESEARCH AND TECHNOLOGY | | DATE: 4-19-65 |
| TEST: POST - 240 HR MEAS. | SAMPLE NUMBER: MTS | BAROM. PRESS. IN. HG. |
| PART NAME & NUMBER: DTL NAND/NOR GATE - SC 736 | TEST MEDIUM: Air | WET BULB TEMP. 61°F |
| MANUFACTURER: B | TEST TEMP. 74° C. ☐ F. ☑ | DRY BULB TEMP. 74°F |
| ENGINEER: | TECHNICIAN: C. Cuthrell | INSPECTOR: |
| REF. SPEC. | | DATA SHEET NUMBER |

JOB NUMBER AO-138-AE PAGE OF TEST REPORT NO. TR1-1188

601-2
1/64

GENERAL PRECISION, INC.
LIBRASCOPE GROUP

# ENVIRONMENTAL LABORATORY DATA SHEET

GROUP IV - TEMP STEP STRESS GROUP

PARAMETER: DC CURRENT GAIN VCE = 0.5 VOLTS
IC = 1.0 MA

BASE CURRENT - FULL SCALE = 100 UA

| SAMPLE NUMBER | IB |
|---|---|
| 81 | no reading |
| 82 | 38.21 |
| 83 | 19.74 |
| 84 | 19.51 |
| 85 | 19.38 |
| 86 | 26.54 |
| 87 | 20.38 |
| 88 | 21.93 |
| 89 | 16.60 |
| 90 | 17.92 |
| 91 | 30.37 |
| 92 | 30.49 |
| 93 | 40.01 |
| 94 | 19.14 |
| 95 | 11.26 |
| 96 | 41.60 |
| 97 | 39.75 |
| 98 | 09.92 |
| 99 | 26.13 |
| 100' | 19.54 |

| | | |
|---|---|---|
| TEST CONDUCTED FOR: NASA, OFFICE OF ADVANCED RESEARCH AND TECHNOLOGY | | DATE: 4-22-65 |
| TEST: POST-240 HR. MEAS. | SAMPLE NUMBER: NOTED | BAROM. PRESS. IN. HG. |
| PART NAME & NUMBER: DTL NAND/NOR GATE - ~~SE102K~~ SC736 | TEST MEDIUM: AIR | WET BULB TEMP. 62°F |
| MANUFACTURER: B | TEST TEMP. 73° C. ☐ F. ☑ | DRY BULB TEMP. 73°F |
| ENGINEER: | TECHNICIAN: C. Cuhver | INSPECTOR: |
| REF. SPEC. | | DATA SHEET NUMBER |

JOB NUMBER A0-139-AE PAGE OF TEST REPORT NO. TR1-1188

2011
4/65

GENERAL PRECISION, INC.
LIBRASCOPE GROUP

# ENVIRONMENTAL LABORATORY DATA SHEET

GROUP IV - TEMP STEP STRESS GROUP

PARAMETER: DC CURRENT GAIN VCE = 0.5 VOLTS
IC = 1.0 MA

BASE CURRENT - FULL SCALE = 100 UA

| SAMPLE NUMBER | IB |
|---|---|
| 101 | 73.85 |
| 102 | 17.28 |
| 103 | 19.85 |
| 104 | 15.52 |
| 105 | 36.64 |
| 106 | 13.20 |
| 107 | 44.74 |
| 108 | 16.36 |
| 109 | 18.60 |
| 110 | 23.52 |
| 111 | 16.62 |
| 112 | 28.26 |
| 113 | 14.24 |
| 114 | 18.26 |
| 115' | 15.60 |

| | | |
|---|---|---|
| TEST CONDUCTED FOR: NASA, OFFICE OF ADVANCED RESEARCH AND TECHNOLOGY | | DATE: 4-22-65 |
| TEST: POST - 240 HR. MEAS. | SAMPLE NUMBER: NOTED | BAROM. PRESS. IN. HG. |
| PART NAME & NUMBER: DTL NAND/NOR GATE - ~~SC102K~~ SC736 | TEST MEDIUM: AIR | WET BULB TEMP. 62°F |
| MANUFACTURER: B | TEST TEMP. 73° C. ☐ F. ☒ | DRY BULB TEMP. 73°F |
| ENGINEER: | TECHNICIAN: C. Cuber | INSPECTOR: |
| REF. SPEC. | | DATA SHEET NUMBER |

JOB NUMBER AO-138-AE PAGE OF TEST REPORT NO. TR1-1188

2011
4/65

GENERAL PRECISION, INC.
LIBRASCOPE GROUP

# ENVIRONMENTAL LABORATORY DATA SHEET

GROUP II - LIFE TEST GROUP

PARAMETER: BREAKDOWN VOLTAGE AT 1 UA

| SAMPLE NUMBER | BV7 | BV8 | BV9 | BVCBO |
|---|---|---|---|---|
| | VOLTAGE - FULL SCALE = 100 VOLTS | | | |
| 26 | 3058 ' | 3104 ' | 3159 ' | 3106 ' |
| 27 | 3112 ' | 3112 ' | 3111 ' | 2713 ' |
| 28 | 3034 ' | 3052 ' | 3054 ' | 3026 ' |
| 29 | 3184 ' | 3173 ' | 3150 ' | 2463 ' |
| 30 | 3129 ' | 3129 ' | 3134 ' | 3099 ' |
| 31 | 2880 ' | 2872 ' | 2866 ' | 2892 ' |
| 32 | 2867 ' | 2869 ' | 2923 ' | 2070 ' |
| 33 | 2986 ' | 2943 ' | 2922 ' | 2010 ' |
| 34 | 2936 ' | 2928 ' | 2956 ' | 1846 ' |
| 35 | 3078 ' | 3106 ' | 3158 ' | 2985 ' |
| 36 | 2970 ' | 2970 ' | 2962 ' | 1727 ' |
| 37 | 2908 ' | 2832 ' | 2828 ' | 2743 ' |
| 38 | 2949 ' | 3003 ' | 3012 ' | 2618 ' |
| 39 | 2806 ' | 2834 ' | 2841 ' | 2889 ' |
| 40 | 2815 ' | 2888 ' | 2900 ' | 2323 ' |
| 41 | 2898 ' | 2911 ' | 2913 ' | 1705 ' |
| 42 | 3015 ' | 3054 ' | 3050 ' | 3036 ' |
| 43 | 3042 ' | 3052 ' | 3057 ' | 1696 ' |
| 44 | 3102 ' | 3110 ' | 3068 ' | 2976 ' |
| 45 | 3003 ' | 3029 ' | 1613 ' | 1528 ' |

CALIBRATION CHECK

| CALIBRATION RESISTOR | | | |
|---|---|---|---|
| | VOLTAGE - FULL SCALE= 100 VOLTS | | |
| 20 MEG | 1999 ' | 1999 ' | 1999 ' |
| 10 MEG | 0996 ' | 0996 ' | 0997 ' |
| 5 MEG' | 0495 ' | 0497 ' | 0496 ' |

| | | |
|---|---|---|
| TEST CONDUCTED FOR: NASA, OFFICE OF ADVANCED RESEARCH AND TECHNOLOGY | | DATE: 4-24-65 |
| TEST: PoST - 100 HR. MEAS | SAMPLE NUMBER: NoTED | BAROM. PRESS. IN. HG. |
| PART NAME & NUMBER: DTL NAND/NOR GATE - SC 736 | TEST MEDIUM: AIR | WET BULB TEMP. 61°F |
| MANUFACTURER: B | TEST TEMP. 74° C. ☐ F. ☒ | DRY BULB TEMP. 74°F |
| ENGINEER / TECHNICIAN | INSPECTOR | |
| REF. SPEC. | DATA SHEET NUMBER | |

JOB NUMBER A0-138-AE PAGE OF TEST REPORT NO. TR1-1188

2011
4/65

GENERAL PRECISION, INC.
LIBRASCOPE GROUP

# ENVIRONMENTAL LABORATORY DATA SHEET

GROUP II - LIFE TEST GROUP

PARAMETER: BREAKDOWN VOLTAGE AT 1 UA

| SAMPLE NUMBER | VOLTAGE - FULL SCALE = 100 VOLTS BV7 | BV8 | BV9 | BVCBO |
|---|---|---|---|---|
| 6 | 3074 ' | 3085 ' | 3096 ' | 3092 ' |
| 7 | 3184 ' | 3186 ' | 3183 ' | 2772 ' |
| 8 | 2964 ' | 2959 ' | 2956 ' | 1423 ' |
| 9 | 2855 ' | 2811 ' | 2822 ' | 2797 ' |
| 10 | 2969 ' | 2980 ' | 2991 ' | 1066 ' |
| 11 | 3024 ' | 3036 ' | 3034 ' | 1588 ' |
| 12 | 2919 ' | 2922 ' | 2931 ' | 2364 ' |
| 13 | 3032 ' | 3085 ' | 3086 ' | 2728 ' |
| 14 | 3086 ' | 3109 ' | 3111 ' | 2269 ' |
| 15 | 3059 ' | 3072 ' | 3076 ' | 1359 ' |
| 16 | 3064 ' | 3088 ' | 3092 ' | 2980 ' |
| 17 | 3099 ' | 3146 ' | 3114 ' | 2898 ' |
| 18 | 2994 ' | 3008 ' | 3003 ' | 2392 ' |
| 19 | 2698 ' | 2722 ' | 2846 ' | 2786 ' |
| 20 | 2812 ' | 2753 ' | 2799 ' | 2742 ' |
| 21 | 3084 ' | 3096 ' | 3095 ' | 3050 ' |
| 22 | 2871 ' | 2975 ' | 3066 ' | 3018 ' |
| 23 | 2911 ' | 2914 ' | 2921 ' | 1774 ' |
| 24 | 2862 ' | 2881 ' | 2872 ' | 1312 ' |
| 25' | | | | |

| | | |
|---|---|---|
| TEST CONDUCTED FOR: NASA, OFFICE OF ADVANCED RESEARCH AND TECHNOLOGY | | DATE: 4-24-65 |
| TEST: POST-100 HR. MEAS. | SAMPLE NUMBER: NOTED | BAROM. PRESS. IN. HG. |
| PART NAME & NUMBER: DTL NAND/NOR GATE - SC 736 | TEST MEDIUM: AIR | WET BULB TEMP. 61°F |
| MANUFACTURER: B | TEST TEMP. 74° C. ☐ F. ☒ | DRY BULB TEMP. 74°F |
| ENGINEER / TECHNICIAN | INSPECTOR | |
| REF. SPEC. | DATA SHEET NUMBER | |

JOB NUMBER A0-138-AE PAGE OF TEST REPORT NO. TR 1-1188

2011
4/65

GENERAL PRECISION, INC.
LIBRASCOPE GROUP

# ENVIRONMENTAL LABORATORY DATA SHEET

GROUP I - INSTRUMENTATION CONTROL

CALIBRATION CHECK - BREAKDOWN VOLTAGE AT 1UA

| CALIBRATION RESISTOR | VOLTAGE - FULL SCALE = 100 VOLTS | | |
|---|---|---|---|
| 20 MEG | 2000 ' | 1999 ' | 1999 ' |
| 10 MEG | 0996 ' | 0996 ' | 0996 ' |
| 5 MEG | 0496 ' | 0496 ' | 0496 ' |

| SAMPLE NUMBER | VOLTAGE - FULL SCALE = 100 VOLTS | | | |
|---|---|---|---|---|
| | BV7 | BV8 | BV9 | BVCBO |
| 1 | 2688 ' | 2680 ' | 2688 ' | 2257 ' |
| 2 | 2529 ' | 2515 ' | 2509 ' | 1905 ' |
| 3 | 2594 ' | 2633 ' | 2641 ' | 2543 ' |
| 4 | 2712 ' | 2696 ' | 2709 ' | 2649 ' |
| 5' | 2437 ' | 2445 ' | 2429 ' | 1984 ' |

| | | |
|---|---|---|
| TEST CONDUCTED FOR: NASA, OFFICE OF ADVANCED RESEARCH AND TECHNOLOGY | | DATE: 4-24-65 |
| TEST: POST-100HR. MEAS. | SAMPLE NUMBER: NOTED | BAROM. PRESS. IN. HG. |
| PART NAME & NUMBER: DTL NAND/NOR GATE - SC 736 | TEST MEDIUM: AIR | WET BULB TEMP. 61°F |
| MANUFACTURER: B | TEST TEMP. 74° C. ☐ F. ☒ | DRY BULB TEMP. 74°F |
| ENGINEER / TECHNICIAN | INSPECTOR | |
| REF. SPEC. | DATA SHEET NUMBER | |

JOB NUMBER AO-138-AE PAGE OF TEST REPORT NO. TR1-1188

2011
4/65

GENERAL PRECISION, INC.
LIBRASCOPE GROUP

# ENVIRONMENTAL LABORATORY DATA SHEET

GROUP II - LIFE TEST GROUP

PARAMETER: LEAKAGE CURRENT AT 4 VOLTS

CURRENT - FULL SCALE = 100 NA

| SAMPLE NUMBER | I7 | I8 | I9 | ICBO | I3 |
|---|---|---|---|---|---|
| 26 | 0043 ' | 0036 ' | 0038 ' | 0069 ' | 0072 ' |
| 27 | 0038 ' | 0038 ' | 0038 ' | 0063 ' | 0066 ' |
| 28 | 0031 ' | 0032 ' | 0029 ' | 0064 ' | 0067 ' |
| 29 | 0032 ' | 0034 ' | 0032 ' | 0063 ' | 0066 ' |
| 30 | 0015 ' | 0015 ' | 0014 ' | 0038 ' | 0046 ' |
| 31 | 0010 ' | 0010 ' | 0010 ' | 0029 ' | 0038 ' |
| 32 | 0037 ' | 0031 ' | 0030 ' | 0085 ' | 0244 ' |
| 33 | 0043 ' | 0035 ' | 0039 ' | 0066 ' | 0064 ' |
| 34 | 0029 ' | 0030 ' | 0031 ' | 0061 ' | 0061 ' |
| 35 | 0034 ' | 0035 ' | 0032 ' | 0063 ' | 0067 ' |
| 36 | 0029 ' | 0055 ' | 0053 ' | 0063 ' | 0062 ' |
| 37 | 0034 ' | 0030 ' | 0030 ' | 0062 ' | 0064 ' |
| 38 | 0043 ' | 0032 ' | 0032 ' | 0065 ' | 0070 ' |
| 39 | 0013 ' | 0014 ' | 0013 ' | 0035 ' | 0044 ' |
| 40 | 0035 ' | 0032 ' | 0028 ' | 0077 ' | 0083 ' |
| 41 | 0035 ' | 0039 ' | 0035 ' | 0076 ' | 0073 ' |
| 42 | 0044 ' | 0037 ' | 0042 ' | 0067 ' | 0071 ' |
| 43 | 0035 ' | 0038 ' | 0039 ' | 0057 ' | 0792 ' |
| 44 | 0040 ' | 0034 ' | 0030 ' | 0061 ' | 0065 ' |
| 45 | 0030 ' | 0028 ' | 0038 ' | 0070 ' | 0064 ' |

CALIBRATION CHECK - 100 NA

| CALIBRATION VOLTAGE | | | |
|---|---|---|---|
| 1.0 V | 0994 ' | 0998 ' | 0997 ' |
| 0.5 V | 0497 ' | 0498 ' | 0495 ' |

| | | |
|---|---|---|
| TEST CONDUCTED FOR: NASA, OFFICE OF ADVANCED RESEARCH AND TECHNOLOGY | | DATE: 9-24-65 |
| TEST: POST - 100 HR. MEAS. | SAMPLE NUMBER: NOTED | BAROM. PRESS. IN. HG. |
| PART NAME & NUMBER: DTL NAND/NOR GATE - SC 736 | TEST MEDIUM: AIR | WET BULB TEMP. 61°F |
| MANUFACTURER: B | TEST TEMP. 74° C. ☐ F. ☒ | DRY BULB TEMP. 74°F |
| ENGINEER / TECHNICIAN | INSPECTOR | |
| REF. SPEC. | DATA SHEET NUMBER | |

JOB NUMBER A0-138-AE PAGE OF TEST REPORT NO. TR1-1188

2011
4/65

GENERAL PRECISION, INC.
LIBRASCOPE GROUP

# ENVIRONMENTAL LABORATORY DATA SHEET

GROUP II - LIFE TEST GROUP

PARAMETER: LEAKAGE CURRENT AT 4 VOLTS

CURRENT- FULL SCALE = 100 NA

| SAMPLE NUMBER | I7 | I8 | I9 | ICBO | I3 |
|---|---|---|---|---|---|
| 6 | 0036 ' | 0038 ' | 0033 ' | 0065 ' | 0069 ' |
| 7 | 0037 ' | 0035 ' | 0033 ' | 0063 ' | 0067 ' |
| 8 | 0028 ' | 0027 ' | 0026 ' | 0054 ' | 0056 ' |
| 9 | 0033 ' | 0248 ' | 0030 ' | 0061 ' | 0063 ' |
| 10 | 0032 ' | 0029 ' | 0033 ' | 0056 ' | 0061 ' |
| 11 | 0031 ' | 0031 ' | 0032 ' | 0067 ' | 0069 ' |
| 12 | 0030 ' | 0030 ' | 0029 ' | 0056 ' | 0060 ' |
| 13 | 0055 ' | 0033 ' | 0031 ' | 0068 ' | 0069 ' |
| 14 | 0034 ' | 0033 ' | 0032 ' | 0062 ' | 0063 ' |
| 15 | 0031 ' | 0031 ' | 0030 ' | 0060 ' | 0063 ' |
| 16 | 0045 ' | 0042 ' | 0044 ' | 0093 ' | 0095 ' |
| 17 | 0032 ' | 0031 ' | 0031 ' | 0063 ' | 0065 ' |
| 18 | 0028 ' | 0029 ' | 0029 ' | 0057 ' | 0060 ' |
| 19 | 0016 ' | 0018 ' | 0024 ' | 0042 ' | 0045 ' |
| 20 | 0050 ' | 0038 ' | 0031 ' | 0061 ' | 0063 ' |
| 21 | 0029 ' | 0031 ' | 0029 ' | 0053 ' | 0062 ' |
| 22 | 0031 ' | 0036 ' | 0036 ' | 0061 ' | 0062 ' |
| 23 | 0029 ' | 0030 ' | 0031 ' | 0062 ' | 0064 ' |
| 24 | 0029 ' | 0028 ' | 0028 ' | 0060 ' | 0061 ' |
| 25' | 0034 ' | 0031 ' | 0029 ' | 0071 ' | 0063 ' |

| | | |
|---|---|---|
| TEST CONDUCTED FOR: NASA, OFFICE OF ADVANCED RESEARCH AND TECHNOLOGY | | DATE: 4-24-65 |
| TEST: POST-100 HR. MEAS. | SAMPLE NUMBER: NOTED | BAROM. PRESS. IN. HG. |
| PART NAME & NUMBER: DTL NAND/NOR GATE - SC 736 | TEST MEDIUM: AIR | WET BULB TEMP. 61°F |
| MANUFACTURER: B | TEST TEMP. 74° C. ☐ F. ☒ | DRY BULB TEMP. 74°F |
| ENGINEER | TECHNICIAN | INSPECTOR |
| REF. SPEC. | | DATA SHEET NUMBER |

JOB NUMBER AA-138-AE PAGE OF TEST REPORT NO. TR1-1188

2011
4/65

GENERAL PRECISION, INC.
LIBRASCOPE GROUP

# ENVIRONMENTAL LABORATORY DATA SHEET

GROUP I - INSTRUMENTATION CONTROL

PARAMETER: LEAKAGE CURRENT AT 4 VOLTS
CALIBRATION CHECK WITH 10 MEG

| CALIBRATION VOLTAGE | CURRENT - FULL SCALE = 100 NA | | |
|---|---|---|---|
| 1.0 V | 0996 ' | 0997 ' | 1000 ' |
| 0.5 V | 0493 ' | 0492 ' | 0493 ' |

| SAMPLE NUMBER | LEAKAGE CURRENT - FULL SCALE = 100 NA | | | | |
|---|---|---|---|---|---|
| | I7 | I8 | I9 | ICBO | I3 |
| 1 | 0047 ' | 0049 ' | 0051 ' | 0088 ' | 0097 ' |
| 2 | 0058 ' | 0059 ' | 0056 ' | 0106 ' | 0120 ' |
| 3 | 0076 ' | 0076 ' | 0074 ' | 0160 ' | 0189 ' |
| 4 | 0035 ' | 0035 ' | 0035 ' | 0058 ' | 0068 ' |
| 5' | 0116 ' | 0131 ' | 0128 ' | 1204 ' | 1242 ' |

| | | | |
|---|---|---|---|
| TEST CONDUCTED FOR: NASA, OFFICE OF ADVANCED RESEARCH AND TECHNOLOGY | | | DATE: 4-24-65 |
| TEST: POST - 100HR. MEAS. | SAMPLE NUMBER: NOTED | | BAROM. PRESS. IN. HG. |
| PART NAME & NUMBER: DTL NAND/NOR GATE - SC 736 | TEST MEDIUM: AIR | | WET BULB TEMP. 61° F |
| MANUFACTURER: B | TEST TEMP. 74° | C. ☐ F. ☒ | DRY BULB TEMP. 74° F |
| ENGINEER | TECHNICIAN | INSPECTOR | |
| REF. SPEC. | | DATA SHEET NUMBER | |

JOB NUMBER AA-138-AE PAGE OF TEST REPORT NO. TR1-1188

2011
4/65

GENERAL PRECISION, INC.
LIBRASCOPE GROUP

# ENVIRONMENTAL LABORATORY DATA SHEET

GROUP II - LIFE TEST GROUP

PARAMETER: RESISTANCE MEASUREMENTS AT 1 MA

RESISTANCE - FULL SCALE = 1+00KOHMS

| SAMPLE NUMBER | R1 | R2 | R3 |
|---|---|---|---|
| 26 | 0193 ' | 0199 ' | 2340 ' |
| 27 | 0218 ' | 0214 ' | 2986 ' |
| 28 | 0186 ' | 0195 ' | 2103 ' |
| 29 | 0184 ' | 0182 ' | 1972 ' |
| 30 | 0186 ' | 0190 ' | 2106 ' |
| 31 | 0222 ' | 0218 ' | 2344 ' |
| 32 | 0182 ' | 0187 ' | 2080 ' |
| 33 | 0177 ' | 0179 ' | 1989 ' |
| 34 | 0200 ' | 0202 ' | 2221 ' |
| 35 | 0196 ' | 0204 ' | 2381 ' |
| 36 | 0184 ' | 0192 ' | 2112 ' |
| 37 | 0175 ' | 0176 ' | 1879 ' |
| 38 | 0206 ' | 0206 ' | 2321 ' |
| 39 | 0184 ' | 0189 ' | 2082 ' |
| 40 | 0184 ' | 0192 ' | 1964 ' |
| 41 | 0199 ' | 0205 ' | 2211 ' |
| 42 | 0191 ' | 0197 ' | 2233 ' |
| 43 | 0180 ' | 0195 ' | 2114 ' |
| 44 | 0183 ' | 0186 ' | 2106 ' |
| 45 | 0196 ' | 0198 ' | 2216 ' |

CALIBRATION CHECK

VOLTAGE - FULL SCALE = 10 0 VOLTS

| CALIBRATION RESISTOR | | | |
|---|---|---|---|
| 2000 OHMS | 0200 ' | 0200 ' | 0200 ' |
| 1000 OHMS | 0097 ' | 0097 ' | 0097 ' |
| 500 OHMS' | | | |

| | | |
|---|---|---|
| TEST CONDUCTED FOR: NASA, OFFICE OF ADVANCED RESEARCH AND TECHNOLOGY | | DATE: 4-24-65 |
| TEST: PAST - 100 HR. MEAS. | SAMPLE NUMBER: NOTED | BAROM. PRESS. IN. HG. |
| PART NAME & NUMBER: DTL NAND/NOR GATE - SC 736 | TEST MEDIUM: AIR | WET BULB TEMP. 61° F |
| MANUFACTURER: B | TEST TEMP. 74° C. ☐ F. ☒ | DRY BULB TEMP. 74° F |
| ENGINEER / TECHNICIAN | INSPECTOR | |
| REF. SPEC. | DATA SHEET NUMBER | |

JOB NUMBER AO-138-AE PAGE OF TEST REPORT NO. TR1-1188

2011
4/65

GENERAL PRECISION, INC.
LIBRASCOPE GROUP

# ENVIRONMENTAL LABORATORY DATA SHEET

GROUP II - LIFE TEST GROUP

PARAMETER: RESISTANCE MEASUREMENTS AT 1 MA

| SAMPLE NUMBER | R1 | R2 | R3 | | | |
|---|---|---|---|---|---|---|
| | RESISTANCE - FULL SCALE = 100K OHMS | | | | | |
| 6 | 0192 ' | 0203 ' | 2392 ' | | | |
| 7 | 0188 ' | 0186 ' | 2079 ' | | | |
| 8 | 0175 ' | 0177 ' | 1843 ' | | | |
| 9 | 0175 ' | 0181 ' | 1973 ' | | | |
| 10 | 0155 ' | 0193 ' | 2093 ' | | | |
| 11 | 0176 ' | 0189 ' | 2076 ' | | | |
| 12 | 0187 ' | 0187 ' | 1996 ' | | | |
| 13 | 0172 ' | 0179 ' | 1949 ' | | | |
| 14 | 0199 ' | 0203 ' | 2406 ' | 0188 ' | 0190 ' | 2097 ' |
| 15 | 0187 ' | 0190 ' | 2098 ' | | | |
| 16 | 0170 ' | 0175 ' | 1933 ' | | | |
| 17 | 0197 ' | 0198 ' | 2226 ' | | | |
| 18 | 0196 ' | 0198 ' | 2192 ' | | | |
| 19 | 0188 ' | 0192 ' | 2125 ' | | | |
| 20 | 0167 ' | 0172 ' | 1869 ' | | | |
| 21 | 0191 ' | 0202 ' | 2250 ' | | | |
| 22 | 0200 ' | 0198 ' | 2157 ' | | | |
| 23 | 0201 ' | 0204 ' | 2172 ' | | | |
| 24 | 0194 ' | 0197 ' | 2128 ' | | | |
| 25' | 0184 ' | 0190 ' | 2164 ' | | | |

| | | |
|---|---|---|
| TEST CONDUCTED FOR: NASA, OFFICE OF ADVANCED RESEARCH AND TECHNOLOGY | | DATE: 4-24-65 |
| TEST: POST-100 HR. MEAS. | SAMPLE NUMBER: NOTED | BAROM. PRESS. IN. HG. |
| PART NAME & NUMBER: DTL NAND/NOR GATE - SC 736 | TEST MEDIUM: AIR | WET BULB TEMP. 61°F |
| MANUFACTURER: B | TEST TEMP. 74° C. ☐ F. ☒ | DRY BULB TEMP. 74°F |
| ENGINEER / TECHNICIAN | INSPECTOR | |
| REF. SPEC. | DATA SHEET NUMBER | |

JOB NUMBER A0-138-AE PAGE OF TEST REPORT NO. TR1-1188

2011
4/65

GENERAL PRECISION, INC.
LIBRASCOPE GROUP

# ENVIRONMENTAL LABORATORY DATA SHEET

GROUP I - INSTRUMENTATION CONTROL

PARAMETER: RESISTANCE MEASUREMENTS AT 1 MA

CALIBRATION CHECK AT 1 MA

| CALIBRATION RESISTOR | VOLTAGE - FULL SCALE = 100 VOLTS | | |
|---|---|---|---|
| 2000 OHMS | 0200 ' | 0200 ' | 0200 ' |
| 1000 OHMS | 0097 ' | 0097 ' | 0098 ' |
| 500 OHMS | | | |

| SAMPLE NUMBER | RESISTANCE - FULL SCALE = 100K OHMS R1 | R2 | R3 |
|---|---|---|---|
| 1 | 0192 ' | 0172 ' | 2208 ' |
| 2 | 0215 ' | 0189 ' | 2438 ' |
| 3 | 0204 ' | 0198 ' | 2451 ' |
| 4 | 0196 ' | 0184 ' | 2346 ' |
| 5' | 0210 ' | 0197 ' | 2465 ' |

| | | |
|---|---|---|
| TEST CONDUCTED FOR: NASA, OFFICE OF ADVANCED RESEARCH AND TECHNOLOGY | | DATE: 4-24-65 |
| TEST: POST-100 HR. MEAS. | SAMPLE NUMBER: NOTED | BAROM. PRESS. IN. HG. |
| PART NAME & NUMBER: DTL NAND/NOR GATE - SC 736 | TEST MEDIUM: AIR | WET BULB TEMP. 61° F |
| MANUFACTURER: B | TEST TEMP. 74° C. ☐ F. ☒ | DRY BULB TEMP. 74° F |
| ENGINEER / TECHNICIAN | INSPECTOR | |
| REF. SPEC. | DATA SHEET NUMBER | |

JOB NUMBER AD-138-AE PAGE OF TEST REPORT NO. TR 1-1188

2011
4/65

GENERAL PRECISION, INC.
LIBRASCOPE GROUP

# ENVIRONMENTAL LABORATORY DATA SHEET

GROUP II - LIFE TEST GROUP

PARAMETER: DIODE FORWARD CURRENT WITH V6 - 4 VOLTS

| SAMPLE NUMBER | If7 | CURRENT - FULL SCALE - 10 MA If8 | If9 |
|---|---|---|---|
| 26 | 1599 ' | 1580 ' | 1599 ' |
| 27 | 1459 ' | 1469 ' | 1478 ' |
| 28 | 1635 ' | 1639 ' | 1632 ' |
| 29 | 1739 ' | 1745 ' | 1770 ' |
| 30 | 1679 ' | 1697 ' | 1700 ' |
| 31 | 1465 ' | 1462 ' | 1475 ' |
| 32 | 1710 ' | 1722 ' | 1699 ' |
| 33 | 1769 ' | 1780 ' | 1794 ' |
| 34 | 1570 ' | 1563 ' | 1576 ' |
| 35 | 1544 ' | 1562 ' | 1549 ' |
| 36 | 1649 ' | 1670 ' | 1653 ' |
| 37 | 1809 ' | 1820 ' | 1799 ' |
| 38 | 1543 ' | 1559 ' | 1559 ' |
| 39 | 1695 ' | 1699 ' | 1702 ' |
| 40 | 1670 ' | 1689 ' | 1672 ' |
| 41 | 1560 ' | 1549 ' | 1562 ' |
| 42 | 1649 ' | 1629 ' | 1622 ' |
| 43 | 1652 ' | 1659 ' | 1649 ' |
| 44 | 1709 ' | 1733 ' | 1732 ' |
| 45 | 1605 ' | 1622 ' | 1605 ' |

CALIBRATION CHECK

| CALIBRATION RESISTOR | | CURRENT - FULL SCALE = 10 MA | |
|---|---|---|---|
| 2000 OHMS | 2000 ' | 1990 ' | 1999 ' |
| 1000 OHMS' | 4000 ' | 4000 ' | 3999 ' |

| | | |
|---|---|---|
| TEST CONDUCTED FOR: NASA, OFFICE OF ADVANCED RESEARCH AND TECHNOLOGY | | DATE: 4-24-65 |
| TEST: POST - 100HR. MEAS. | SAMPLE NUMBER: NOTED | BAROM. PRESS. IN. HG. |
| PART NAME & NUMBER: DTL NAND/NOR GATE - SC 736 | TEST MEDIUM: AIR | WET BULB TEMP. 61°F |
| MANUFACTURER: B | TEST TEMP. 74° C. ☐ F. ☒ | DRY BULB TEMP. 74°F |
| ENGINEER / TECHNICIAN | INSPECTOR | |
| REF. SPEC. | DATA SHEET NUMBER | |

JOB NUMBER AO-138-AE PAGE OF TEST REPORT NO. TR1-1188

2011
4/65

GENERAL PRECISION, INC.
LIBRASCOPE GROUP

# ENVIRONMENTAL LABORATORY DATA SHEET

GROUP II - LIFE TEST GROUP

PARAMETER: DIODE FORWARD CURRENT WITH V6 = 4 VOLTS

| SAMPLE NUMBER | CURRENT - FULL SCALE = 10 MA If7 | If8 | If9 | | | |
|---|---|---|---|---|---|---|
| 6 | 1606 ' | 1582 ' | 1585 ' | | | |
| 7 | 1716 ' | 1700 ' | 1701 ' | | | |
| 8 | 1814 ' | 1801 ' | 1819 ' | | | |
| 9 | 1769 ' | 1780 ' | 1757 ' | | | |
| 10 | 1659 ' | 1640 ' | 1654 ' | | | |
| 11 | 1712 ' | 1695 ' | 1700 ' | | | |
| 12 | 1720 ' | 1715 ' | 1734 ' | | | |
| 13 | 1802 ' | 1787 ' | 1806 ' | [illegible] ' | [illegible] ' | 1579 ' |
| 14 | [illegible] ' | [illegible] ' | 1570 ' | | | |
| 15 | 1684 ' | 1689 ' | 1681 ' | | | |
| 16 | 1823 ' | 1823 ' | 1831 ' | | | |
| 17 | 1626 ' | 1633 ' | 1609 ' | | | |
| 18 | 1619 ' | 1609 ' | 1620 ' | | | |
| 19 | 1680 ' | 1669 ' | 1670 ' | | | |
| 20 | 1842 ' | 1860 ' | 1860 ' | | | |
| 21 | 1599 ' | 1600 ' | 1583 ' | 1612 ' | | |
| 22 | 1599 ' | 1599 ' | 1600 ' | | | |
| 23 | 1562 ' | 1582 ' | 1567 ' | | | |
| 24 | 1599 ' | 1619 ' | 1622 ' | | | |
| 25 ' | 1695 ' | 1692 ' | 1672 ' | | | |

| | | |
|---|---|---|
| TEST CONDUCTED FOR: NASA, OFFICE OF ADVANCED RESEARCH AND TECHNOLOGY | | DATE: 4-24-65 |
| TEST: POST-100 HR. MEAS. | SAMPLE NUMBER: NOTED | BAROM. PRESS. IN. HG. |
| PART NAME & NUMBER: DTL NAND/NOR GATE-SC 736 | TEST MEDIUM: AIR | WET BULB TEMP.: 61° F. |
| MANUFACTURER: B | TEST TEMP.: 74° C. ☐ F. ☒ | DRY BULB TEMP.: 74° F. |
| ENGINEER | TECHNICIAN | INSPECTOR |
| REF. SPEC. | | DATA SHEET NUMBER |

JOB NUMBER A0-138-AE PAGE OF TEST REPORT NO. TR1-1188

2011
4/65

GENERAL PRECISION, INC.
LIBRASCOPE GROUP

# ENVIRONMENTAL LABORATORY DATA SHEET

GROUP I - INSTRUMENTATION CONTROL

CALIBRATION: CURRENT FULL SCALE = 10 MA

| RESISTOR | | | |
|---|---|---|---|
| 2000 OHMS | 2000 ' | 1999 ' | 2000 ' |
| 1000 OHMS | 4000 ' | 4009 ' | 3995 ' |

PARAMETER: DIODE FORWARD CURRENT WITH V10 = 4 VOLTS

| SAMPLE NUMBER | CURRENT FULL SCALE = 10 MA If7 | If8 | If9 |
|---|---|---|---|
| 1 | 1846 ' | 1834 ' | 1839 ' |
| 2 | 1680 ' | 1670 ' | 1672 ' |
| 3 | 1607 ' | 1632 ' | 1620 ' |
| 4 | 1711 ' | 1720 ' | 1732 ' |
| 5' | 1630 ' | 1630 ' | 1620 ' |

| | | |
|---|---|---|
| TEST CONDUCTED FOR: NASA, OFFICE OF ADVANCED RESEARCH AND TECHNOLOGY | | DATE: 4-24-65 |
| TEST: POST - 100 HR. MEAS. | SAMPLE NUMBER: NOTED | BAROM. PRESS. IN. HG. |
| PART NAME & NUMBER: DTL NAND/NOR GATE - SC 736 | TEST MEDIUM: AIR | WET BULB TEMP. 61°F. |
| MANUFACTURER: B | TEST TEMP. 74° C. ☐ F. ☒ | DRY BULB TEMP. 74°F. |
| ENGINEER / TECHNICIAN | INSPECTOR | |
| REF. SPEC. | DATA SHEET NUMBER | |

JOB NUMBER A0-138-AE PAGE OF TEST REPORT NO. TR 1-1188

2011
4/65

GENERAL PRECISION, INC.
LIBRASCOPE GROUP

# ENVIRONMENTAL LABORATORY DATA SHEET

GROUP II- LIFE TEST GROUP

PARAMETER: OUTPUT SATURATION VOLTAGE AT Ic= 10 MA Ib = 1 MA

| SAMPLE NUMBER | V3 |
|---|---|
| 26 | 0245 ' |
| 27 | 0218 ' |
| 28 | 0244 ' |
| 29 | 0232 ' |
| 30 | 0295 ' |
| 31 | 0218 ' |
| 32 | 0239 ' |
| 33 | 0235 ' |
| 34 | 0216 ' |
| 35 | 0240 ' |
| 36 | 0221 ' |
| 37 | 0237 ' |
| 38 | 0216 ' |
| 39 | 0204 ' |
| 40 | 0250 ' |
| 41 | 0233 ' |
| 42 | 0240 ' |
| 43 | 0209 ' |
| 44 | 0234 ' |
| 45 | 0228 ' |

VOLTAGE - FULL SCALE = 10 VOLTS

CALIBRATION CHECK AT Ic = 10MA - Ib = 1 MA

VOLTAGE - FULL SCALE = 10 VOLTS

| CALIBRATION RESISTOR | | | |
|---|---|---|---|
| 500 OHMS | 0499 ' | 0498 ' | 0498 ' |
| 50 OHMS' | 0499 ' | 0499 ' | 0499 ' |

| | | |
|---|---|---|
| TEST CONDUCTED FOR: NASA, OFFICE OF ADVANCED RESEARCH AND TECHNOLOGY | | DATE: 4-14-65 |
| TEST: POST-100HR. MEAS. | SAMPLE NUMBER: NOTED | BAROM. PRESS. IN. HG. |
| PART NAME & NUMBER: DTL NAND/NOR GATE-SC 736 | TEST MEDIUM: AIR | WET BULB TEMP. 61°F. |
| MANUFACTURER: B | TEST TEMP. 74° C. ☐ F. ☒ | DRY BULB TEMP. 74°F. |
| ENGINEER / TECHNICIAN | INSPECTOR | |
| REF. SPEC. | DATA SHEET NUMBER | |

JOB NUMBER A4-138-AE PAGE OF TEST REPORT NO. TR1-1188

2011
4/65

GENERAL PRECISION, INC.
LIBRASCOPE GROUP

# ENVIRONMENTAL LABORATORY DATA SHEET

GROUP II- LIFE TEST GROUP

PARAMETER: OUTPUT SATURATION VOLTAGE AT Ic= 10 MA Ib = 1 MA

VOLTAGE - FULL SCALE = 10 VOLTS

| SAMPLE NUMBER | V3 |
|---|---|
| 6 | 0240 ' |
| 7 | 0231 ' |
| 8 | 0219 ' |
| 9 | 0236 ' |
| 10 | 0201 ' |
| 11 | 0245 ' |
| 12 | 0227 ' |
| 13 | 0230 ' |
| 14 | 0236 ' |
| 15 | 0207 ' |
| 16 | 0263 ' |
| 17 | 0237 ' |
| 18 | 0231 ' |
| 19 | 0213 ' |
| 20 | 0241 ' |
| 21 | 0218 ' |
| 22 | 0215 ' |
| 23 | 0233 ' |
| 24 | 0223 ' |
| 25' | 0232 ' |

| | | |
|---|---|---|
| TEST CONDUCTED FOR: NASA, OFFICE OF ADVANCED RESEARCH AND TECHNOLOGY | | DATE: 4-24-65 |
| TEST: POST - 100 HR. MEAS. | SAMPLE NUMBER: NOTED | BAROM. PRESS. IN. HG. |
| PART NAME & NUMBER: DTL NAND/NOR GATE - SC 736 | TEST MEDIUM: AIR | WET BULB TEMP. 61°F. |
| MANUFACTURER: B | TEST TEMP. 74° C. ☐ F. ☒ | DRY BULB TEMP. 74°F. |
| ENGINEER / TECHNICIAN | INSPECTOR | |
| REF. SPEC. | DATA SHEET NUMBER | |

JOB NUMBER A0-138-AF PAGE OF TEST REPORT NO. TR1-1188

2011
4/65

GENERAL PRECISION, INC.
LIBRASCOPE GROUP

# ENVIRONMENTAL LABORATORY DATA SHEET

GROUP I - INSTRUMENTATION CONTROL

PARAMETER: OUTPUT SATURATION VOLTAGE AT Ic = 10 MA - Ib = 1 MA

CALIBRATION CHECK AT Ic = 10MA - Ib = 1 MA

| CALIBRATION RESISTOR | VOLTAGE - FULL SCALE = 10 VOLTS | | |
|---|---|---|---|
| 500 OHMS | 0499 ' | 0499 ' | 0498 ' |
| 50 OHMS | 0499 ' | 0499 ' | 0499 ' |

| SAMPLE NUMBER | VOLTAGE - FULL SCALE = 10 VOLTS V3 |
|---|---|
| 1 | 0176 ' |
| 2 | 0170 ' |
| 3 | 0177 ' |
| 4 | 0180 ' |
| 5' | 0167 ' |

| | | |
|---|---|---|
| TEST CONDUCTED FOR: NASA, OFFICE OF ADVANCED RESEARCH AND TECHNOLOGY | | DATE: 4-24-65 |
| TEST: POST - 100 HR. MEAS. | SAMPLE NUMBER: NOTED | BAROM. PRESS. IN. HG. |
| PART NAME & NUMBER: DTL NAND/NOR GATE - SC 736 | TEST MEDIUM: AIR | WET BULB TEMP. 61°F |
| MANUFACTURER: B | TEST TEMP. 74° C. ☐ F. ☑ | DRY BULB TEMP. 74°F |
| ENGINEER | TECHNICIAN | INSPECTOR |
| REF. SPEC. | | DATA SHEET NUMBER |

JOB NUMBER A0-138-AE PAGE OF TEST REPORT NO. TR1-1188

2011
4/65

GENERAL PRECISION, INC.
LIBRASCOPE GROUP

# ENVIRONMENTAL LABORATORY DATA SHEET

GROUP II - LIFE TEST GROUP

PARAMETER: DC CURRENT GAIN VCE= 0.5 VOLTS
IC = 1.0 MA

BASE CURRENT - FULL SCALE = 100UA

| SAMPLE NUMBER | IB |
|---|---|
| 6 | 16.48 |
| 7 | 18.83 |
| 8 | 46.73 |
| 9 | 6.60 |
| 10 | 21.85 |
| 11 | 12.24 |
| 12 | 20.91 |
| 13 | 21.11 |
| 14 | |
| 15 | |
| 16 | |
| 17 | |
| 18 | |
| 19 | |
| 20 | |
| 21 | |
| 22 | |
| 23 | |
| 24 | |
| 25' | |

| | | |
|---|---|---|
| TEST CONDUCTED FOR: NASA, OFFICE OF ADVANCED RESEARCH AND TECHNOLOGY | | DATE: 4-24-65 |
| TEST: POST-100 HR. MEAS. | SAMPLE NUMBER: NOTED | BAROM. PRESS. IN. HG. |
| PART NAME & NUMBER: DTL NAND/NOR GATE - SC 736 | TEST MEDIUM: AIR | WET BULB TEMP. 61° F |
| MANUFACTURER: B | TEST TEMP. 74° C. ☐ F. ☒ | DRY BULB TEMP. 74° F. |
| ENGINEER | TECHNICIAN | INSPECTOR |
| REF. SPEC. | | DATA SHEET NUMBER |

JOB NUMBER AO-138-AE PAGE OF TEST REPORT NO. TR1-1188

2011
4/65

GENERAL PRECISION, INC.
LIBRASCOPE GROUP

# ENVIRONMENTAL LABORATORY DATA SHEET

GROUP II - LIFE TEST GROUP

PARAMETER: DC CURRENT GAIN VCE= 0.5 VOLTS
IC = 1.0 MA

BASE CURRENT - FULL SCALE = 100UA

| SAMPLE NUMBER | IB |
|---|---|
| 26 | 15.14 |
| 27 | 16.82 |
| 28 | 22.11 |
| 29 | 15.14 |
| 30 | 36.85 |
| 31 | 13.06 |
| 32 | 68.80 |
| 33 | 42.82 |
| 34 | 15.75 |
| 35 | 17.88 |
| 36 | 16.51 |
| 37 | 44.06 |
| 38 | 15.24+ |
| 39 | 24.48 |
| 40 | 10.76 |
| 41 | 14.80 |
| 42 | 16.89 |
| 43 | 11.49 |
| 44 | 33.07 |
| 45' | 13.02 |

| | | |
|---|---|---|
| TEST CONDUCTED FOR: NASA, OFFICE OF ADVANCED RESEARCH AND TECHNOLOGY | | DATE: 4-24-65 |
| TEST: POST-100HR. MEAS. | SAMPLE NUMBER: NOTED | BAROM. PRESS. IN. HG. |
| PART NAME & NUMBER: DTL NAND/NOR GATE - SC736 | TEST MEDIUM: AIR | WET BULB TEMP. 61°F |
| MANUFACTURER: B | TEST TEMP. 74° C. ☐ F. ☒ | DRY BULB TEMP. 74°F |
| ENGINEER | TECHNICIAN | INSPECTOR |
| REF. SPEC. | | DATA SHEET NUMBER |

JOB NUMBER A0-138-AE PAGE OF TEST REPORT NO. TR1-1188

2011
4/65

GENERAL PRECISION, INC.
LIBRASCOPE GROUP

# ENVIRONMENTAL LABORATORY DATA SHEET

GROUP II - LIFE TEST GROUP

PARAMETER: DC CURRENT GAIN VCE= 0.5 VOLTS
IC = 1.0 MA

BASE CURRENT - FULL SCALE = 100UA

| SAMPLE NUMBER | IB |
|---|---|
| 6 | 16.43 |
| 7 | 18.61 |
| 8 | 12.55 |
| 9 | 46.56 |
| 10 | 6.57 |
| 11 | 21.77 |
| 12 | 12.25 |
| 13 | 20.93 |
| 14 | 21.19 |
| 15 | 9.09 |
| 16 | 24.46 |
| 17 | 19.64 |
| 18 | 16.81 |
| 19 | 35.60 |
| 20 | 39.93 |
| 21 | 12.69 |
| 22 | 14.15 |
| 23 | 13.30 |
| 24 | 13.69 |
| 25' | 28.40 |

| | | |
|---|---|---|
| TEST CONDUCTED FOR: NASA, OFFICE OF ADVANCED RESEARCH AND TECHNOLOGY | | DATE: 4-24-65 |
| TEST: POST - 100 HR. MEAS. | SAMPLE NUMBER: NOTED | BAROM. PRESS. IN. HG. |
| PART NAME & NUMBER: DTL NAND/NOR GATE - SC 736 | TEST MEDIUM: AIR | WET BULB TEMP. 61°F |
| MANUFACTURER: B | TEST TEMP. 74° C. ☐ F. ☒ | DRY BULB TEMP. 74°F |
| ENGINEER / TECHNICIAN | INSPECTOR | |
| REF. SPEC. | DATA SHEET NUMBER | |

JOB NUMBER A0-138-AE PAGE OF TEST REPORT NO. TR1-1188

2011
4/65

GENERAL PRECISION, INC.
LIBRASCOPE GROUP

# ENVIRONMENTAL LABORATORY DATA SHEET

GROUP I - INSTRUMENTATION CONTROL GROUP

PARAMETER: DC CURRENT GAIN VCE= 0.5 VOLTS
IC = 1.0 MA

CALIBRATION: NONE

BASE CURRENT - FULL SCALE = 100UA

| SAMPLE NUMBER | IB |
|---|---|
| 1 | 23.62 |
| 2 | 26.87 |
| 3 | 21.15 |
| 4 | 21.62 |
| 5 | 15.96 |

| | | |
|---|---|---|
| TEST CONDUCTED FOR: NASA, OFFICE OF ADVANCED RESEARCH AND TECHNOLOGY | | DATE: 4-24-65 |
| TEST: POST-100HR MEAS | SAMPLE NUMBER: NOTED | BAROM. PRESS. IN. HG. |
| PART NAME & NUMBER: DTL NAND/NOR GATE - SC 736 | TEST MEDIUM: AIR | WET BULB TEMP. 61°F |
| MANUFACTURER: B | TEST TEMP. 74° C. ☐ F. ☒ | DRY BULB TEMP. 74°F |
| ENGINEER / TECHNICIAN | INSPECTOR | |
| REF. SPEC. | DATA SHEET NUMBER | |

JOB NUMBER A0-138-AE PAGE OF TEST REPORT NO. TR1-1188

2011
4/65

GENERAL PRECISION, INC.
LIBRASCOPE GROUP

# ENVIRONMENTAL LABORATORY DATA SHEET

GROUP I - INSTRUMENTATION CONTROL

PARAMETER: BREAKDOWN VOLTAGE AT 1UA

CALIBRATION CHECK - BREAKDOWN VOLTAGE AT 1UA

| CALIBRATION RESISTOR | VOLTAGE - FULL SCALE = 100 VOLTS | | |
|---|---|---|---|
| 20 MEG | 2001 2' | 1999 2' | 1999 2' |
| 10 MEG | 0996 2' | 0996 2' | 0996 2' |
| 5 MEG | 0495 2' | 0496 2' | 0496 2' |

| SAMPLE NUMBER | VOLTAGE - FULL SCALE = 100 VOLTS BV7 | BV8 | BV9 |
|---|---|---|---|
| 1 | 2682 2' | 2673 2' | 2681 2' |
| 2 | 2524 2' | 2509 2' | 2503 2' |
| 3 | 2596 2' | 2634 2' | 2642 2' |
| 4 | 2707 2' | 2691 2' | 2704 2' |
| 5' | 2441 2' | 2448 2' | 2436 2' |

| | | |
|---|---|---|
| TEST CONDUCTED FOR: NASA, OFFICE OF ADVANCED RESEARCH AND TECHNOLOGY | | DATE: 4-30-65 |
| TEST: POST-360HR. MEAS. - STEP 1 | SAMPLE NUMBER: NOTED | BAROM. PRESS. IN. HG. |
| PART NAME & NUMBER: DTL NAND/NOR GATE - SC 736 | TEST MEDIUM: AIR | WET BULB TEMP. 62°F |
| MANUFACTURER: B | TEST TEMP. 72° C. ☐ F. ☒ | DRY BULB TEMP. 72°F |
| ENGINEER | TECHNICIAN: J. CALLEY | INSPECTOR |
| REF. SPEC. | | DATA SHEET NUMBER |

JOB NUMBER A0-138-AE PAGE OF TEST REPORT NO. TR1-1188

2011
4/65

GENERAL PRECISION, INC.
LIBRASCOPE GROUP

# ENVIRONMENTAL LABORATORY DATA SHEET

GROUP III - TEMP CYCLE STEP STRESS GROUP

PARAMETER: BREAKDOWN VOLTAGE AT 1UA

| SAMPLE NUMBER | BV7 | VOLTAGE - FULL SCALE = 100 VOLTS BV8 | BV9 |
|---|---|---|---|
| 46 | 3119 2' | 3147 2' | 3158 2' |
| 47 | 2997 2' | 2945 2' | 2942 2' |
| 48 | 3134 2' | 3140 2' | 3143 2' |
| 49 | 2976 2' | 3011 2' | 3011 2' |
| 50 | 3082 2' | 3088 2' | 3088 2' |
| 51 | 3177 2' | 3178 2' | 3173 2' |
| 52 | 3035 2' | 3061 2' | 3064 2' |
| 53 | 3038 2' | 3083 2' | 3092 2' |
| 54 | 2989 2' | 2967 2' | 2963 2' |
| 55 | 2923 2' | 2889 2' | 2898 2' |
| 56 | 2937 2' | 2910 2' | 2939 2' |
| 57 | 3131 2' | 3095 2' | 3165 2' |
| 58 | 2888 2' | 2888 2' | 2903 2' |
| 59 | 3121 2' | 3108 2' | 3110 2' |
| 60 | 3162 2' | 3184 2' | 3039 2' |
| 61 | 3116 2' | 3124 2' | 3025 2' |
| 62 | 3103 2' | 3128 2' | 3046 2' |
| 63 | 1146 2' | 3189 2' | 3180 2' |
| 64 | 3045 2' | 3038 2' | 3077 2' |
| 65 | 1139 2' | 2903 2' | 2905 2' |

CALIBRATION CHECK

| CALIBRATION RESISTOR | | VOLTAGE - FULL SCALE = 100 VOLTS | |
|---|---|---|---|
| 20 MEG | 2001 2' | 1999 2' | 2000 2' |
| 10 MEG | 0996 2' | 0996 2' | 0996 2' |
| 5 MEG' | 0495 2' | 0495 2' | 0495 2' |

| | | |
|---|---|---|
| TEST CONDUCTED FOR: NASA, OFFICE OF ADVANCED RESEARCH AND TECHNOLOGY | | DATE: 4-30-65 |
| TEST: POST-360HR MEAS - STEP 1 | SAMPLE NUMBER: NOTED | BAROM. PRESS. IN. HG. |
| PART NAME & NUMBER: DTL NAND/NOR GATE - SC 736 | TEST MEDIUM: AIR | WET BULB TEMP. 62°F |
| MANUFACTURER: B | TEST TEMP. 72° C. ☐ F. ☒ | DRY BULB TEMP. 72°F |
| ENGINEER / TECHNICIAN: J. CALLEY | INSPECTOR | |
| REF. SPEC. | DATA SHEET NUMBER | |

JOB NUMBER AO-138-AE PAGE OF TEST REPORT NO. TR1-1188

2011
4/65

GENERAL PRECISION, INC.
LIBRASCOPE GROUP

# ENVIRONMENTAL LABORATORY DATA SHEET

GROUP I - INSTRUMENTATION CONTROL
PARAMETER: LEAKAGE CURRENT AT 4 VOLTS
CALIBRATION CHECK WITH 10 MEG

| CALIBRATION VOLTAGE | CURRENT - FULL SCALE = 100 NA | | |
|---|---|---|---|
| 1.0 V | 1001 2' | 0999 2' | 0999 2' |
| 0.5 V | 0493 2' | 0494 2' | 0495 2' |

| SAMPLE NUMBER | LEAKAGE CURRENT - FULL SCALE = 100 NA | | | |
|---|---|---|---|---|
| | I7 | I8 | I9 | ICBO |
| 1 | 0397 1' | 0384 1' | 0388 1' | 0715 1' |
| 2 | 0493 1' | 0493 1' | 0493 1' | 0864 1' |
| 3 | 0629 1' | 0613 1' | 0587 1' | 1274 1' |
| 4 | 0314 1' | 0312 1' | 0307 1' | 0544 1' |
| 5' | 0973 1' | 1084 1' | 1083 1' | 1072 2' |

| | | |
|---|---|---|
| TEST CONDUCTED FOR: NASA, OFFICE OF ADVANCED RESEARCH AND TECHNOLOGY | | DATE: 4-30-65 |
| TEST: POST-360 HR MEAS - STEP 1 | SAMPLE NUMBER: NOTED | BAROM. PRESS. IN. HG. |
| PART NAME & NUMBER: DTL NAND/NOR GATE - SC 734 | TEST MEDIUM: AIR | WET BULB TEMP. 62°F |
| MANUFACTURER: B | TEST TEMP. 72° C. ☐ F. ☒ | DRY BULB TEMP. 72°F |
| ENGINEER / TECHNICIAN: J. CALLEY | INSPECTOR | |
| REF. SPEC. | DATA SHEET NUMBER | |

JOB NUMBER A0-138-AE PAGE OF TEST REPORT NO. TR1-1188

2011
4/65

GENERAL PRECISION, INC.
LIBRASCOPE GROUP

# ENVIRONMENTAL LABORATORY DATA SHEET

GROUP III - TEMP CYCLE STEP STRESS GROUP

PARAMETER: LEAKAGE CURRENT AT 4 VOLTS

CURRENT - FULL SCALE = 100 NA

| SAMPLE NUMBER | I7 | I8 | I9 | ICBO |
|---|---|---|---|---|
| 46 | 0310 1' | 0288 1' | 0294 1' | 0551 1' |
| 47 | 0271 1' | 0292 1' | 0279 1' | 0516 1' |
| 48 | 0266 1' | 0260 1' | 0269 1' | 0502 1' |
| 49 | 0259 1' | 0265 1' | 0262 1' | 0488 1' |
| 50 | 0277 1' | 0276 1' | 0260 1' | 0013 1' |
| 51 | 0246 1' | 0263 1' | 0271 1' | 0496 1' |
| 52 | 0268 1' | 0266 1' | 0269 1' | 0520 1' |
| 53 | 0268 1' | 0276 1' | 0283 1' | 0535 1' |
| 54 | 0315 1' | 0274 1' | 0269 1' | 0526 1' |
| 55 | 0317 1' | 0321 1' | 0292 1' | 0558 1' |
| 56 | 0138 1' | 0156 1' | 0141 1' | 0312 1' |
| 57 | 0368 1' | 0339 1' | 0371 1' | 0733 1' |
| 58 | 0239 1' | 0246 1' | 0250 1' | 0472 1' |
| 59 | 0275 1' | 0276 1' | 0269 1' | 0513 1' |
| 60 | 0366 1' | 0343 1' | 0357 1' | 0621 1' |
| 61 | 0297 1' | 0315 1' | 0281 1' | 0587 1' |
| 62 | 0303 1' | 0302 1' | 0280 1' | 0502 1' |
| 63 | 0314 1' | 0292 1' | 0313 1' | 0553 1' |
| 64 | 0155 1' | 0139 1' | 0138 1' | 0329 1' |
| 65 | 0219 1' | 0241 1' | 0243 1' | 0437 1' |

CALIBRATION CHECK - 100 NA

| CALIBRATION VOLTAGE | | | |
|---|---|---|---|
| 1.0 V | 0998 2' | 0999 2' | 1000 2' |
| 0.5 V' | 0495 2' | 0497 2' | 0497 2' |

| | | |
|---|---|---|
| TEST CONDUCTED FOR: NASA, OFFICE OF ADVANCED RESEARCH AND TECHNOLOGY | | DATE: 4-30-65 |
| TEST: POST-360 HR MEAS - STEP 1 | SAMPLE NUMBER: NOTED | BAROM. PRESS. IN. HG. |
| PART NAME & NUMBER: DTL NAND/NOR GATE - SC 736 | TEST MEDIUM: AIR | WET BULB TEMP. 62°F |
| MANUFACTURER: B | TEST TEMP. 72° C. ☐ F. ☒ | DRY BULB TEMP. 72°F |
| ENGINEER | TECHNICIAN: J. CALLEY | INSPECTOR |
| REF. SPEC. | | DATA SHEET NUMBER |

JOB NUMBER A0-138-AE PAGE OF TEST REPORT NO. TR1-1188

2011
4/65

GENERAL PRECISION, INC.
LIBRASCOPE GROUP

# ENVIRONMENTAL LABORATORY DATA SHEET

GROUP I - INSTRUMENTATION CONTROL

PARAMETER: RESISTANCE MEASUREMENTS AT 1 MA

CALIBRATION CHECK AT 1 MA

| CALIBRATION RESISTOR | VOLTAGE - FULL SCALE = 100 VOLTS | | |
|---|---|---|---|
| 2000 OHMS | 0202 2' | 0202 2' | 0202 2' |
| 1000 OHMS | 0098 2' | 0098 2' | 0098 2' |

| SAMPLE NUMBER | RESISTANCE - FULL SCALE - 100K OHMS R1 | R2 | R3 |
|---|---|---|---|
| 1 | 0194 2' | 0173 2' | 2236 2' |
| 2 | 0217 2' | 0191 2' | 2469 2' |
| 3 | 0207 2' | 0413 2' | 2484 2' |
| 4 | 0198 2' | 0185 2' | 2376 2' |
| 5' | 0212 2' | 0199 2' | 2497 2' |

| | | |
|---|---|---|
| TEST CONDUCTED FOR: NASA, OFFICE OF ADVANCED RESEARCH AND TECHNOLOGY | | DATE: 7-30-65 |
| TEST: POST -360 HR. MEAS - STEP 1 | SAMPLE NUMBER: NOTED | BAROM. PRESS. IN. HG. |
| PART NAME & NUMBER: DTL NAND/NOR GATE - SG 736 | TEST MEDIUM: AIR | WET BULB TEMP. 62° F |
| MANUFACTURER: B | TEST TEMP. 72° C. ☐ F. ☑ | DRY BULB TEMP. 72° F |
| ENGINEER | TECHNICIAN: J. CALLEY | INSPECTOR |
| REF. SPEC. | | DATA SHEET NUMBER |

JOB NUMBER AO-138-AE PAGE OF TEST REPORT NO. TR1-1188

2011
4/65

GENERAL PRECISION, INC.
LIBRASCOPE GROUP

# ENVIRONMENTAL LABORATORY DATA SHEET

GROUP III - TEMP CYCLE STEP STRESS GROUP

PARAMETER: RESISTANCE MEASUREMENTS AT 1 MA

| SAMPLE NUMBER | RESISTANCE - FULL SCALE = 100 K OHMS R1 | R2 | R3 |
|---|---|---|---|
| 46 | 0204 2' | 0205 2' | 2282 2' |
| 47 | 0175 2' | 0179 2' | 2003 2' |
| 48 | 0199 2' | 0205 2' | 2362 2' |
| 49 | 0169 2' | 0176 2' | 1885 2' |
| 50 | 0210 2' | 0182 2' | 1997 2' |
| 51 | 0185 2' | 0184 2' | 2037 2' |
| 52 | 0199 2' | 0201 2' | 2285 2' |
| 53 | 0196 2' | 0203 2' | 2082 2' |
| 54 | 0200 2' | 0210 2' | 2524 2' |
| 55 | 0170 2' | 0175 2' | 1923 2' |
| 56 | 0209 2' | 0214 2' | 2350 2' |
| 57 | 0182 2' | 0187 2' | 2178 2' |
| 58 | 0186 2' | 0184 2' | 1887 2' |
| 59 | 0187 2' | 0197 2' | 2232 2' |
| 60 | 0199 2' | 0191 2' | 2198 2' |
| 61 | 0199 2' | 0204 2' | 1680 2' |
| 62 | 0183 2' | 0196 2' | 2090 2' |
| 63 | 0191 2' | 0192 2' | 2171 2' |
| 64 | 0199 2' | 0197 2' | 2125 2' |
| 65 | 0187 2' | 0184 2' | 1946 2' |

CALIBRATION CHECK

| CALIBRATION RESISTOR | VOLTAGE - FULL SCALE = 100 VOLTS | | |
|---|---|---|---|
| 2000 OHMS | 0202 2' | 0202 2' | 0203 2' |
| 1000 OHMS | 0098 2' | 0097 2' | 0098 2' |

| | | |
|---|---|---|
| TEST CONDUCTED FOR: NASA, OFFICE OF ADVANCED RESEARCH AND TECHNOLOGY | | DATE: 4-30-65 |
| TEST: POST - 360 HR MEAS - STEP 1 | SAMPLE NUMBER: NOTED | BAROM. PRESS. IN. HG. |
| PART NAME & NUMBER: DTL NAND/NOR GATE - SC 736 | TEST MEDIUM: AIR | WET BULB TEMP. 62°F |
| MANUFACTURER: B | TEST TEMP. 72°F C. ☐ F. ☒ | DRY BULB TEMP. 72°F |
| ENGINEER | TECHNICIAN: J. CALLEY | INSPECTOR |
| REF. SPEC. | | DATA SHEET NUMBER |

JOB NUMBER A0-138-AE PAGE OF TEST REPORT NO. TR1-1188

2011
4/65

GENERAL PRECISION, INC.
LIBRASCOPE GROUP

# ENVIRONMENTAL LABORATORY DATA SHEET

GROUP I - INSTRUMENTATION CONTROL

CALIBRATION: CURRENT FULL SCALE = 10 MA
RESISTOR

| | | | |
|---|---|---|---|
| 2000 OHMS | 1999 7' | 2000 7' | 1999 7' |
| 1000 OHMS | 4009 7' | 4006 7' | 4011 7' |

PARAMETER: DIODE FORWARD CURRENT WITH V10 = 4 VOLTS

| SAMPLE NUMBER | CURRENT FULL SCALE = 10 MA If7 | If8 | If9 |
|---|---|---|---|
| 1 | 1854 7' | 1852 7' | 1841 7' |
| 2 | 1696 7' | 1694 7' | 1696 7' |
| 3 | 1624 7' | 1629 7' | 1629 7' |
| 4 | 1720 7' | 177 7' | 1719 7' |
| 5' | 1620 7' | 1619 7' | 1618 7' |

| | | |
|---|---|---|
| TEST CONDUCTED FOR: NASA, OFFICE OF ADVANCED RESEARCH AND TECHNOLOGY | | DATE: 4-30-65 |
| TEST: POST - 360 HR MEAS - STEP 1 | SAMPLE NUMBER: NOTED | BAROM. PRESS. IN. HG. |
| PART NAME & NUMBER: DTL NAND/NOR GATE - SC 736 | TEST MEDIUM: AIR | WET BULB TEMP. 62°F |
| MANUFACTURER: B | TEST TEMP. 72° C. ☐ F. ☒ | DRY BULB TEMP. 72°F |
| ENGINEER | TECHNICIAN: J. CALLEY | INSPECTOR |
| REF. SPEC. | | DATA SHEET NUMBER |

JOB NUMBER Ao-138-AE PAGE OF TEST REPORT NO. TR1-1188

2011
4/65

GENERAL PRECISION, INC.
LIBRASCOPE GROUP

# ENVIRONMENTAL LABORATORY DATA SHEET

GROUP III - TEMP CYCLE STEP STRESS GROUP

PARAMETER: DIODE FORWARD CURRENT WITH V6 = 4 VOLTS

| SAMPLE NUMBER | If7 | CURRENT - FULL SCALE = 10 MA If8 | If9 |
|---|---|---|---|
| 46 | 1566 7' | 1569 7' | 1571 7' |
| 47 | 1789 7' | 1788 7' | 1789 7' |
| 48 | 1569 7' | 1569 7' | 1569 7' |
| 49 | 1815 7' | 1814 7' | 1780 7' |
| 50 | 1736 7' | 1753 7' | 1459 7' |
| 51 | 1743 7' | 1742 7' | 1749 7' |
| 52 | 1594 7' | 1598 7' | 1595 7' |
| 53 | 1588 7' | 1589 7' | 1595 7' |
| 54 | 1591 7' | 1574 7' | 1589 7' |
| 55 | 1823 7' | 1833 7' | 1828 7' |
| 56 | 1519 7' | 1511 7' | 1512 7' |
| 57 | 1740 7' | 1739 7' | 1737 7' |
| 58 | 1745 7' | 1743 7' | 1752 7' |
| 59 | 1631 7' | 1639 7' | 1635 7' |
| 60 | 1705 7' | 1699 7' | 1703 7' |
| 61 | 1590 7' | 1586 7' | 1585 7' |
| 62 | 1731 7' | 1725 7' | 1727 7' |
| 63 | 1683 7' | 1687 7' | 1691 7' |
| 64 | 1635 7' | 1642 7' | 1646 7' |
| 65 | 1757 7' | 1755 7' | 1759 7' |

CALIBRATION CHECK

| CALIBRATION | | CURRENT - | |
|---|---|---|---|
| 2000 OHMS | 1999 7' | 1991 7' | 1994 7' |
| 1000 OHMS' | 4000 7' | 3993 7' | 3996 7' |

| | | |
|---|---|---|
| TEST CONDUCTED FOR NASA, OFFICE OF ADVANCED RESEARCH AND TECHNOLOGY | | DATE 4-30-65 |
| TEST POST-360HR MEAS -STEP 1 | SAMPLE NUMBER NOTED | BAROM. PRESS. IN. HG. |
| PART NAME & NUMBER DTL NAND/NOR GATE -SC 736 | TEST MEDIUM AIR | WET BULB TEMP. 62° F |
| MANUFACTURER B | TEST TEMP. 72° C. ☐ F. ☒ | DRY BULB TEMP. 72° F |
| ENGINEER | TECHNICIAN J. CALLEY | INSPECTOR |
| REF. SPEC. | | DATA SHEET NUMBER |

JOB NUMBER A0-138-AE PAGE OF TEST REPORT NO. TR1-1188

2011
4/65

GENERAL PRECISION, INC.
LIBRASCOPE GROUP

# ENVIRONMENTAL LABORATORY DATA SHEET

GROUP I - INSTRUMENTATION CONTROL

PARAMETER: OUTPUT SATURATION VOLTAGE AT Ic = 10 MA - Ib = 1 MA

CALIBRATION CHECK AT Ic = 10MA - Ib = 1 MA

| CALIBRATION RESISTOR | VOLTAGE - FULL SCALE = 10 VOLTS | | |
|---|---|---|---|
| 500 OHMS | 0500 7' | 0501 7' | 0500 7' |
| 50 OHMS | 0501 1' | 0501 1' | 0501 1' |

| SAMPLE NUMBER | VOLTAGE - FULL SCALE = 10 VOLTS V3 |
|---|---|
| 1 | 0171 1' |
| 2 | 0165 1' |
| 3 | 0170 1' |
| 4 | 0173 1' |
| 5' | 0161 1' |

| | | |
|---|---|---|
| TEST CONDUCTED FOR: NASA, OFFICE OF ADVANCED RESEARCH AND TECHNOLOGY | | DATE: 4-30-65 |
| TEST: POST - 360 HR MEAS - STEP 1 | SAMPLE NUMBER: NOTED | BAROM. PRESS. IN. HG. |
| PART NAME & NUMBER: DTL NAND/NOR GATE - SC 736 | TEST MEDIUM: AIR | WET BULB TEMP. 62°F |
| MANUFACTURER: B | TEST TEMP. 72° C. ☐ F. ☒ | DRY BULB TEMP. 72°F |
| ENGINEER | TECHNICIAN: J. CALLEY | INSPECTOR |
| REF. SPEC. | | DATA SHEET NUMBER |

JOB NUMBER Ao-138-AE PAGE OF TEST REPORT NO. TR1-1188

2011
4/65

GENERAL PRECISION, INC.
LIBRASCOPE GROUP

# ENVIRONMENTAL LABORATORY DATA SHEET

GROUP III- TEMP CYCLE STEP STRESS GROUP

PARAMETER: OUTPUT SATURATION VOLTAGE AT Ic= 10 MA Ib = 1 MA

VOLTAGE - FULL SCALE = 10 VOLTS

| SAMPLE NUMBER | V3 |
|---|---|
| 46 | 0240 1' |
| 47 | 0240 1' |
| 48 | 0219 1' |
| 49 | 0230 1' |
| 50 | 0206 1' |
| 51 | 0234 1' |
| 52 | 0230 1' |
| 53 | 0241 1' |
| 54 | 0236 1' |
| 55 | 0239 1' |
| 56 | 0253 1' |
| 57 | 0245 1' |
| 58 | 0215 1' |
| 59 | 0223 1' |
| 60 | 0230 1' |
| 61 | 0229 1' |
| 62 | 0257 1' |
| 63 | 0230 1' |
| 64 | 0279 1' |
| 65 | 0221 1' |

CALIBRATION CHECK AT Ic = 10MA - Ib = 1 MA

VOLTAGE - FULL SCALE = 10 VOLTS

| CALIBRATION RESISTOR | | | |
|---|---|---|---|
| 500 OHMS | 0501 1' | 0500 1' | 0501 1' |
| 50 OHMS' | 0501 1' | 0501 1' | 0501 1' |

| | | |
|---|---|---|
| TEST CONDUCTED FOR: NASA, OFFICE OF ADVANCED RESEARCH AND TECHNOLOGY | | DATE: 4-30-65 |
| TEST: POST-360 HR MEAS. - STEP 1 | SAMPLE NUMBER: NOTED | BAROM. PRESS. IN. HG. |
| PART NAME & NUMBER: DTL NAND/NOR GATE - SC 736 | TEST MEDIUM: AIR | WET BULB TEMP.: 62°F |
| MANUFACTURER: B | TEST TEMP.: 72° C. ☐ F. ☒ | DRY BULB TEMP.: 72°F |
| ENGINEER | TECHNICIAN: J. CALLEY | INSPECTOR |
| REF. SPEC. | | DATA SHEET NUMBER |

JOB NUMBER RO-138-AE PAGE OF TEST REPORT NO. TR1-1188

2011
4/65

GENERAL PRECISION, INC.
LIBRASCOPE GROUP

# ENVIRONMENTAL LABORATORY DATA SHEET

GROUP I - INSTRUMENTATION CONTROL GROUP

PARAMETER: DC CURRENT GAIN VCE= 0.5 VOLTS
IC = 1.0 MA

CALIBRATION: NONE

BASE CURRENT - FULL SCALE - 100UA

| SAMPLE NUMBER | IB |
|---|---|
| 1 | 23.28 |
| 2 | 26.32 |
| 3 | 20.64 |
| 4 | 21.23 |
| 5 | 19.60 |

| | | |
|---|---|---|
| TEST CONDUCTED FOR: NASA, OFFICE OF ADVANCED RESEARCH AND TECHNOLOGY | | DATE: 4-30-65 |
| TEST: POST-360HR MEAS - STEP 1 | SAMPLE NUMBER: NOTED | BAROM. PRESS. IN. HG. |
| PART NAME & NUMBER: DTL NAND/NOR GATE - SC 736 | TEST MEDIUM: AIR | WET BULB TEMP. 62°F |
| MANUFACTURER: B | TEST TEMP. 72° C. ☐ F. ☒ | DRY BULB TEMP. 72°F |
| ENGINEER | TECHNICIAN: J. CALLEY | INSPECTOR |
| REF. SPEC. | | DATA SHEET NUMBER |

JOB NUMBER A0-138-AE PAGE OF TEST REPORT NO. TR1-1188

2011
4/65

GENERAL PRECISION, INC.
LIBRASCOPE GROUP

# ENVIRONMENTAL LABORATORY DATA SHEET

GROUP III - TEMP CYCLE STEP STRESS GROUP

PARAMETER: DC CURRENT GAIN VCE= 0.5 VOLTS
IC = 1.0 MA

BASE CURRENT - FULL SCALE = 100 UA

| SAMPLE NUMBER | IB hFE |
|---|---|
| 46 | 22.65 |
| 47 | 56.01 |
| 48 | 18.01 |
| 49 | 22.52 |
| 50 | 15.22 |
| 51 | 21.00 |
| 52 | 16.28 |
| 53 | 26.03 |
| 54 | 46.94 |
| 55 | 58.21 |
| 56 | 23.70 |
| 57 | 26.90 |
| 58 | 12.25 |
| 59 | 28.52 |
| 60 | 36.14 |
| 61 | 26.36 |
| 62 | 45.56 |
| 63 | 16.82 |
| 64 | 26.16 |
| 65 | 14.24 |

| | | |
|---|---|---|
| TEST CONDUCTED FOR: NASA, OFFICE OF ADVANCED RESEARCH AND TECHNOLOGY | | DATE: 4-30-65 |
| TEST: POST-360HR MEAS - STEP 1 | SAMPLE NUMBER: NOTED | BAROM. PRESS. IN. HG. |
| PART NAME & NUMBER: DTL NAND/NOR GATE - SC 736 | TEST MEDIUM: AIR | WET BULB TEMP. 62° F |
| MANUFACTURER: B | TEST TEMP. 72° C. ☐ F. ☒ | DRY BULB TEMP. 72° F |
| ENGINEER | TECHNICIAN: J. CALLEY | INSPECTOR |
| REF. SPEC. | | DATA SHEET NUMBER |

JOB NUMBER A0-138-AE PAGE OF TEST REPORT NO. TR1-1188

2011
4/65

GENERAL PRECISION, INC.
LIBRASCOPE GROUP

# ENVIRONMENTAL LABORATORY DATA SHEET

| G UP I | TEST CONDITIONS: IF RETEST CHECK ☐ | | $t_{on}$ | $t_{off}$ | $t_r$ | $t_f$ | | | |
|---|---|---|---|---|---|---|---|---|---|
| | | SAMPLE NUMBER | NS | NS | NS | NS | | | |
| | | 1 | 48 | 32 | 54 | 24 | | | |
| | | 2 | 48 | 32 | 50 | 23 | | | |
| | | 3 | 47 | 31 | 48 | 23 | | | |
| | | 4 | 50 | 28 | 48 | 26 | | | |
| | | 5 | 50 | 32 | 51 | 25 | | | |
| SET-UP (NS) ME / DIVISION | | | 20 | 20 | 20 | 20 | | | |

| | | |
|---|---|---|
| TEST CONDUCTED FOR NASA, OFFICE OF ADVANCED RESEARCH AND TECHNOLOGY | | DATE 1-27-65 |
| TEST INITIAL MEAS.-SWITCHING CHARACTERISTICS | SAMPLE NUMBER NOTED | BAROM. PRESS. IN. HG. 30.04 |
| PART NAME & NUMBER DTL NAND/NOR GATE - SE102K | TEST MEDIUM AIR | WET BULB TEMP. 60°F |
| MANUFACTURER [redacted] C | TEST TEMP. 77° C. ☐ F. ☒ | DRY BULB TEMP. 77°F |
| ENGINEER N.D. Wistanen | TECHNICIAN D. Harris | INSPECTOR |
| REF. SPEC. | | DATA SHEET NUMBER 3 |

JOB NUMBER AD-198-AE PAGE OF TEST REPORT NO. TRI-1188

601-2
1/64

GENERAL PRECISION, INC.
LIBRASCOPE GROUP

# ENVIRONMENTAL LABORATORY DATA SHEET

GROUP II

| TEST CONDITIONS: IF RETEST CHECK ☐ | | $t_{on}$ | $t_{off}$ | $t_r$ | $t_f$ | | | |
|---|---|---|---|---|---|---|---|---|
| | SAMPLE NUMBER | NS | NS | NS | NS | | | |
| | 6 | 48 | 35 | 53 | 23 | | | |
| | 7 | 48 | 28 | 50 | 25 | | | |
| | 8 | 48 | 33 | 51 | 23 | | | |
| | 9 | 49 | 30 | 47 | 25 | | | |
| | 10 | 46 | 30 | 48 | 22 | | | |
| | 11 | 49 | 30 | 48 | 24 | | | |
| | 12 | 48 | 30 | 48 | 24 | | | |
| | 13 | 46 | 33 | 52 | 23 | | | |
| | 14 | 46 | 34 | 52 | 23 | | | |
| | 15 | 48 | 30 | 48 | 24 | | 36 | |
| | 16 | 50 | 28 | 48 | 24 | | | |
| | 17 | 47 | 32 | 52 | 22 | | | |
| | 18 | 47 | 30 | 50 | 22 | | | |
| | 19 | 48 | 32 | 52 | 22 | | | |
| | 20 | 48 | 31 | 51 | 22 | | | |

| | | |
|---|---|---|
| TEST CONDUCTED FOR: NASA, OFFICE OF ADVANCED RESEARCH AND TECHNOLOGY | | DATE: 1-27-65 |
| TEST: INITIAL MEAS. - SWITCHING CHARACTERISTICS | SAMPLE NUMBER: NOTED | BAROM. PRESS. 30.04 IN. HG. |
| PART NAME & NUMBER: DTL NAND/NOR GATE - SE102K | TEST MEDIUM: AIR | WET BULB TEMP. 60° F |
| MANUFACTURER: [redacted] C | TEST TEMP. 77° C. ☐ F. ☒ | DRY BULB TEMP. 77° F |
| ENGINEER: T. D. Winterson | TECHNICIAN: D. Harris | INSPECTOR: |
| REF. SPEC. | | DATA SHEET NUMBER: 4 |

JOB NUMBER A0-138-AE PAGE OF TEST REPORT NO. TR1-1188

601-2
1/64

GENERAL PRECISION, INC.
LIBRASCOPE GROUP

# ENVIRONMENTAL LABORATORY DATA SHEET

GROUP II

| TEST CONDITIONS: IF RETEST CHECK ☐ | | $t_{on}$ | $t_{off}$ | $t_r$ | $t_f$ | | | |
|---|---|---|---|---|---|---|---|---|
| | SAMPLE NUMBER | NS | NS | NS | NS | | | |
| | 21 | 51 | 28 | 49 | 25 | | | |
| | 22 | 49 | 31 | 51 | 24 | | | |
| | 23 | 48 | 29 | 50 | 25 | | | |
| | 24 | 50 | 32 | 51 | 24 | | | |
| | 25 | 51 | 27 | 50 | 26 | | | |
| | 26 | 49 | 28 | 50 | 25 | | | |
| | 27 | 47 | 27 | 49 | 23 | | | |
| | 28 | 46 | 29 | 50 | 22 | | | |
| | 29 | 47 | 31 | 51 | 22 | | | |
| | 30 | 50 | 28 | 51 | 25 | | | |
| | 31 | 47 | 35 | 54 | 24 | | | |
| | 32 | 46 | 29 | 49 | 23 | | | |
| | 33 | 48 | 30 | 52 | 24 | | | |
| | 34 | 50 | 27 | 49 | 26 | | | |
| | 35 | 48 | 32 | 53 | 24 | | | |

| | | |
|---|---|---|
| TEST CONDUCTED FOR: NASA, OFFICE OF ADVANCED RESEARCH AND TECHNOLOGY | | DATE: 1-28-65 |
| TEST: INITIAL MEAS. - SWITCHING CHARACTERISTICS | SAMPLE NUMBER: NOTED | BAROM. PRESS. 29.84 IN. HG. |
| PART NAME & NUMBER: DTL NAND/NOR GATE - SE103K | TEST MEDIUM: AIR | WET BULB TEMP. 61° F |
| MANUFACTURER: [redacted] C | TEST TEMP. 76° C. ☐ F. ☒ | DRY BULB TEMP. 76° F |
| ENGINEER: N. D. Wintanen | TECHNICIAN: D. Harris | INSPECTOR: |
| REF. SPEC. | | DATA SHEET NUMBER 5 |

JOB NUMBER Ao-138-AE PAGE OF TEST REPORT NO. TR1-1188

601-2
1/64

GENERAL PRECISION, INC.
LIBRASCOPE GROUP

# ENVIRONMENTAL LABORATORY DATA SHEET

| | TEST CONDITIONS: IF RETEST CHECK ☐ | | $t_{on}$ | $t_{off}$ | $t_r$ | $t_f$ | | | |
|---|---|---|---|---|---|---|---|---|---|
| GROUP I | | SAMPLE NUMBER | NS | NS | NS | NS | | | |
| | | 1 | 48 | 33 | 56 | 23 | | | |
| | | 2 | 48 | 33 | 53 | 23 | | | |
| | | 3 | 48 | 31 | 52 | 22 | | | |
| | | 4 | 51 | 29 | 51 | 25 | | | |
| | | 5 | 50 | 33 | 53 | 24 | | | |

| | | |
|---|---|---|
| TEST CONDUCTED FOR: NASA, OFFICE OF ADVANCED RESEARCH AND TECHNOLOGY | | DATE: 3-11-65 |
| TEST: INITIAL MEAS.- SWITCHING CHARACTERISTICS | SAMPLE NUMBER: NOTED | BAROM. PRESS. 29.68 IN. HG. |
| PART NAME & NUMBER: DTL NAND/NOR GATE - SE102K | TEST MEDIUM: AIR | WET BULB TEMP. 58°F |
| MANUFACTURER: C | TEST TEMP. 72° C. ☐ F. ☒ | DRY BULB TEMP. 72°F |
| ENGINEER: N.D. Wintanen | TECHNICIAN: D. Harris | INSPECTOR: |
| REF. SPEC. | | DATA SHEET NUMBER: 12 |

JOB NUMBER A0-138-AE PAGE OF TEST REPORT NO. TR1-1188

601-2
1/64

GENERAL PRECISION, INC.
LIBRASCOPE GROUP

# ENVIRONMENTAL LABORATORY DATA SHEET

| TEST CONDITIONS: IF RETEST CHECK ☐ | | $t_{on}$ | $t_{off}$ | $t_r$ | $t_r$ | | | |
|---|---|---|---|---|---|---|---|---|
| | SAMPLE NUMBER | NS | NS | NS | NS | | | |
| | 36 | 48 | 33 | 55 | 23 | | | |
| | 37 | 49 | 29 | 53 | 24 | | | |
| | 38 | 47 | 35 | 56 | 24 | | | |
| | 39 | 49 | 31 | 53 | 24 | | | |
| | 40 | 47 | 31 | 53 | 22 | | | |
| | 41 | 49 | 29 | 51 | 24 | | | |
| | 42 | 47 | 32 | 53 | 21 | | | |
| | 43 | 48 | 30 | 53 | 24 | | | |
| | 44 | 50 | 31 | 53 | 25 | | | |
| | 45 | 46 | 32 | 53 | 22 | | | |
| | 46 | 50 | 33 | 54 | 23 | | | |
| | 47 | 47 | 29 | 50 | 22 | | | |
| | 48 | 49 | 30 | 52 | 24 | | | |
| | 49 | 48 | 29 | 51 | 24 | | | |
| | 50 | 46 | 29 | 50 | 22 | | | |

| | | |
|---|---|---|
| TEST CONDUCTED FOR: NASA, OFFICE OF ADVANCED RESEARCH AND TECHNOLOGY | | DATE: 3-11-65 |
| TEST: INITIAL MEAS. - SWITCHING CHARACTERISTICS | SAMPLE NUMBER: NOTED | BAROM. PRESS. 29.68 IN. HG. |
| PART NAME & NUMBER: DTL NAND/NOR GATE - SE102K | TEST MEDIUM: AIR | WET BULB TEMP. 58°F |
| MANUFACTURER: C | TEST TEMP. 72° C. ☐ F. ☒ | DRY BULB TEMP. 72°F |
| ENGINEER: R. D. Wistanen | TECHNICIAN: D. Harris | INSPECTOR: |
| REF. SPEC. | | DATA SHEET NUMBER: 13 |

JOB NUMBER A0-138-AE PAGE OF TEST REPORT NO. TR1-1188

601-2
1/64

GENERAL PRECISION, INC.
LIBRASCOPE GROUP

# ENVIRONMENTAL LABORATORY DATA SHEET

| TEST CONDITIONS: IF RETEST CHECK ☐ | | $t_{on}$ | $t_{off}$ | $t_r$ | $t_f$ | | | |
|---|---|---|---|---|---|---|---|---|
| | SAMPLE NUMBER | NS | NS | NS | NS | | | |
| | 51 | 50 | 29 | 51 | 25 | | | |
| | 52 | 48 | 29 | 51 | 24 | | | |
| | 53 | 48 | 30 | 50 | 24 | | | |
| | 54 | 47 | 29 | 50 | 23 | | | |
| | 55 | 46 | 32 | 53 | 22 | | | |
| | 56 | 48 | 31 | 52 | 22 | | | |
| | 57 | 47 | 29 | 49 | 23 | | | |
| | 58 | 47 | 30 | 52 | 23 | | | |
| | 59 | 49 | ~~55~~ 25 | 47 | 25 | | | |
| | 60 | 48 | 31 | 52 | 22 | | | |
| | 61 | 48 | 30 | 51 | 23 | | | |
| | 62 | 46 | 32 | 51 | 21 | | | |
| | 63 | 48 | 29 | 50 | 24 | | | |
| | 64 | 48 | 32 | 53 | 22 | | | |
| | 65 | 48 | 29 | 50 | 23 | | | |

| | | |
|---|---|---|
| TEST CONDUCTED FOR: NASA, OFFICE OF ADVANCED RESEARCH AND TECHNOLOGY | | DATE: 3-11-65 |
| TEST: INITIAL MEAS. - SWITCHING CHARACTERISTICS | SAMPLE NUMBER: NOTED | BAROM. PRESS.: 29.70 IN. HG. |
| PART NAME & NUMBER: DTL NAND/NOR GATE - SE102K | TEST MEDIUM: AIR | WET BULB TEMP.: 57°F |
| MANUFACTURER: C | TEST TEMP.: 72° C. ☐ F. ☒ | DRY BULB TEMP.: 72°F |
| ENGINEER: N. D. Witanen | TECHNICIAN: D. Harris | INSPECTOR: |
| REF. SPEC. | | DATA SHEET NUMBER: 14 |

JOB NUMBER A0-138-AE PAGE OF TEST REPORT NO. TR1-1188

601-2
1/64

GENERAL PRECISION, INC.
LIBRASCOPE GROUP

# ENVIRONMENTAL LABORATORY DATA SHEET

| TEST CONDITIONS: IF RETEST CHECK ☐ | | $t_{on}$ | $t_{off}$ | $t_r$ | $t_f$ | | | |
|---|---|---|---|---|---|---|---|---|
| | SAMPLE NUMBER | NS | NS | NS | NS | | | |
| | 66 | 46 | 28 | 49 | 30 | | | |
| | 67 | 43 | 33 | 54 | 27 | | | |
| | 68 | 44 | 28 | 48 | 28 | | | |
| | 69 | 44 | 30 | 51 | 28 | | | |
| | 70 | 43 | 31 | 51 | 27 | | | |
| | 71 | 45 | 34 | 53 | 29 | | | |
| | 72 | 45 | 30 | 52 | 29 | | | |
| | 73 | 46 | 34 | 53 | 28 | | | |
| | 74 | 46 | 35 | 54 | 29 | | | |
| | 75 | 44 | 34 | 52 | 27 | | | |
| | 76 | 46 | 32 | 52 | 29 | | | |
| | 77 | 46 | 36 | 53 | 27 | | | |
| | 78 | 45 | 33 | 52 | 27 | | | |
| | 79 | 48 | 35 | 49 | 29 | | | |
| | 80 | 47 | 35 | 53 | 27 | | | |

| | | |
|---|---|---|
| TEST CONDUCTED FOR: NASA, OFFICE OF ADVANCED RESEARCH AND TECHNOLOGY | | DATE: 3-26-65 |
| TEST: INITIAL MEAS. - SWITCHING CHARACTERISTICS | SAMPLE NUMBER: NOTED | BAROM. PRESS. IN. HG. |
| PART NAME & NUMBER: DTL NAND/NOR GATE - SE102K | TEST MEDIUM: AIR | WET BULB TEMP. 60°F |
| MANUFACTURER: C | TEST TEMP. 74 C. ☐ F. ☐ | DRY BULB TEMP. 74°F |
| ENGINEER: N.D. Weitanen TECHNICIAN: D. Harris | INSPECTOR | |
| REF. SPEC. | DATA SHEET NUMBER | |

JOB NUMBER A0-138-AE PAGE OF TEST REPORT NO. TR 1-1188

601-2
1/64

GENERAL PRECISION, INC.
LIBRASCOPE GROUP

# ENVIRONMENTAL LABORATORY DATA SHEET

| TEST CONDITIONS: IF RETEST CHECK ☐ | | $t_{on}$ | $t_{off}$ | $t_r$ | $t_f$ | | | |
|---|---|---|---|---|---|---|---|---|
| | SAMPLE NUMBER | NS | NS | NS | NS | | | |
| | 81 | 44 | 32 | 50 | 27 | | | |
| | 82 | 45 | 34 | 52 | 27 | | | |
| | 83 | 46 | 31 | 49 | 29 | | | |
| | 84 | 43 | 32 | 51 | 26 | | | |
| | 85 | 44 | 33 | 52 | 27 | | | |
| | 86 | 46 | 30 | 50 | 29 | | | |
| | 87 | 45 | 32 | 51 | 28 | | | |
| | 88 | 45 | 32 | 51 | 27 | | | |
| | 89 | 44 | 34 | 53 | 26 | | | |
| | 90 | 44 | 31 | 50 | 27 | | | |
| | 91 | 46 | 34 | 53 | 27 | | | |
| | 92 | 46 | 31 | 51 | 29 | | | |
| | 93 | 48 | 30 | 50 | 29 | | | |
| | 94 | 44 | 34 | 53 | 26 | | | |
| | 95 | 46 | 31 | 51 | 29 | | | |

| | | |
|---|---|---|
| TEST CONDUCTED FOR: NASA, OFFICE OF ADVANCED RESEARCH AND TECHNOLOGY | | DATE: 3-26-65 |
| TEST: INITIAL MOS - SWITCHING CHARACTERISTICS | SAMPLE NUMBER: NOTED | BAROM. PRESS. IN. HG. |
| PART NAME & NUMBER: DTL NAND/NOR GATE - SE102K | TEST MEDIUM: AIR | WET BULB TEMP. 59°F |
| MANUFACTURER: C | TEST TEMP. 74 C. ☐ F. ☒ | DRY BULB TEMP. 74°F |
| ENGINEER: N. D. Wintanen | TECHNICIAN: D. Harris | INSPECTOR: |
| REF. SPEC. | | DATA SHEET NUMBER |

JOB NUMBER AO-139-AE PAGE OF TEST REPORT NO. TR1-1188

601-2
1/64

GENERAL PRECISION, INC.
LIBRASCOPE GROUP

# ENVIRONMENTAL LABORATORY DATA SHEET

| | TEST CONDITIONS: IF RETEST CHECK ☐ | | $t_{on}$ | $t_{off}$ | $t_r$ | $t_f$ | | | |
|---|---|---|---|---|---|---|---|---|---|
| | | SAMPLE NUMBER | NS | NS | NS | NS | | | |
| | | 96 | 46 | 29 | 49 | 29 | | | |
| | | 97 | 45 | 32 | 51 | 29 | | | |
| | | 98 | 46 | 31 | 50 | 29 | | | |
| | | 99 | 48 | 31 | 50 | 29 | | | |
| | | 100 | 46 | 31 | 50 | 28 | | | |
| | | 101 | 46 | 32 | 51 | 28 | | | |
| | | 102 | 45 | 31 | 51 | 28 | | | |
| | | 103 | 44 | 33 | 52 | 26 | | | |
| | | 104 | 45 | 30 | 49 | 27 | | | |
| | | 105 | 44 | 34 | 53 | 27 | | | |
| | | 106 | 45 | 34 | 52 | 27 | | | |
| | | 107 | 44 | 33 | 53 | 27 | | | |
| 4-5-65 | | 108 | 41 | 30 | 52 | 27 | WB = 60°F | DB = 74°F | |
| | | 109 | 43 | 32 | 52 | 27 | | | |
| | | 110 | ~~43~~ 41 | 26 | 48 | 28 | | | |
| | | 111 | 43 | 28 | 50 | 28 | | | |
| | | 112 | 42 | 28 | 50 | 28 | | | |
| | | 113 | 41 | 27 | 48 | 28 | | | |
| | | 114 | 41 | 28 | 50 | 27 | | | |
| | | 115 | 41 | 29 | 50 | 27 | | | |

| | | |
|---|---|---|
| TEST CONDUCTED FOR: NASA, OFFICE OF ADVANCED RESEARCH AND TECHNOLOGY | | DATE: 3-26-65 |
| TEST: INITIAL MEAS. - SWITCHING CHARACTERISTICS | SAMPLE NUMBER: NOTED | BAROM. PRESS. IN. HG. |
| PART NAME & NUMBER: 1 DTL NAND/NOR GATE - SE102K | TEST MEDIUM: AIR | WET BULB TEMP. 59 °F |
| MANUFACTURER: C | TEST TEMP. 74 C. ☐ F. ☒ | DRY BULB TEMP. 74 °F |
| ENGINEER: N. D. Westrand | TECHNICIAN: D. Harris | INSPECTOR: |
| REF. SPEC. | | DATA SHEET NUMBER |

JOB NUMBER A0-138-AE PAGE OF TEST REPORT NO. TR1-1188

601 2
1/64

GENERAL PRECISION, INC.
LIBRASCOPE GROUP

# ENVIRONMENTAL LABORATORY DATA SHEET

TEST CONDITIONS:
IF RETEST CHECK ☐

GROUP I

| SAMPLE NUMBER | $BV_7$ VOLTS | $BV_8$ VOLTS | $BV_9$ VOLTS | $BV_{CBO}$ VOLTS |
|---|---|---|---|---|
| 1 | 18.3 | 17.3 | 18.1 | 18.1 |
| 2 | 19.2 | 19.2 | 19.2 | 18.9 |
| 3 | 18.5 | 14.0 | 18.4 | 18.3 |
| 4 | 17.9 | 18.1 | 18.1 | 18.0 |
| 5 | 18.2 | 18.3 | 18.3 | 18.2 |

CALIBRATION CHECK - BREAKDOWN VOLTAGE
I = 1 μADC

| | CALIB. RESISTOR | VOLTAGE |
|---|---|---|
| START OF TEST: | 20 MEG | 20.01 |
| | 10 MEG | 10.00 |
| | 5 MEG | 5.01 |
| COMPLETION OF TEST: | 20 MEG | 20.01 |
| | 10 MEG | 10.00 |
| | 5 MEG | 5.01 |

| | | |
|---|---|---|
| TEST CONDUCTED FOR: NASA, OFFICE OF ADVANCED RESEARCH AND TECHNOLOGY | | DATE: 3-31-65 |
| TEST: INITIAL MEAS. - D.C. PARAMETER CHARACTERISTICS | SAMPLE NUMBER: NOTED | BAROM. PRESS. IN. HG. |
| PART NAME & NUMBER: DTL NAND/NOR GATE - SE102K | TEST MEDIUM: AIR | WET BULB TEMP.: 61°F |
| MANUFACTURER: C | TEST TEMP.: 74°F C. ☐ F. ☐ | DRY BULB TEMP.: 74°F |
| ENGINEER | TECHNICIAN: [illegible] | INSPECTOR |
| REF. SPEC. | | DATA SHEET NUMBER |

JOB NUMBER Ao-138-AE PAGE OF TEST REPORT NO. TR1-1188

601-2
1/64

GENERAL PRECISION, INC.
LIBRASCOPE GROUP

# ENVIRONMENTAL LABORATORY DATA SHEET

TEST CONDITIONS:
IF RETEST CHECK ☐

GROUP II

| SAMPLE NUMBER | $BV_7$ VOLTS | $BV_8$ VOLTS | $BV_9$ VOLTS | $BV_{CBO}$ VOLTS | | |
|---|---|---|---|---|---|---|
| 6 | 18.2 | 18.3 | 18.4 | 18.2 | | |
| 7 | 19.0 | 19.1 | 19.0 | 18.7 | | |
| 8 | 19.0 | 19.0 | 18.9 | 18.0 | | |
| 9 | 19.6 | 19.6 | 19.6 | 19.3 | | |
| 10 | 19.7 | 19.6 | 19.6 | 19.3 | | |
| 11 | 18.9 | 18.9 | 18.9 | 18.6 | | |
| 12 | 19.4 | 19.3 | 19.3 | * | | * ERRATIC |
| 13 | 19.0 | 19.0 | 19.1 | 18.7 | | 18.3 → 18.9 |
| 14 | 18.7 | 18.7 | 18.7 | 18.5 | | |
| 15 | 19.0 | 19.1 | 19.0 | 18.8 | | |
| 16 | 19.2 | 19.3 | 19.3 | 14.2 | | |
| 17 | 19.0 | 19.0 | 19.0 | 18.7 | | |
| 18 | 19.2 | 19.2 | 19.1 | 18.9 | | |
| 19 | 19.0 | 19.0 | 19.0 | 18.7 | | |
| 20 | 18.9 | 18.9 | 19.0 | 18.6 | | |
| 21 | 19.3 | 19.3 | 19.3 | 19.1 | | |
| 22 | 19.0 | 19.1 | 19.1 | 18.8 | | |
| 23 | 19.2 | 19.2 | 19.2 | 18.9 | | |
| 24 | 19.2 | 19.3 | 19.3 | 18.2 | | |
| 25 | 19.0 | 18.9 | 19.0 | 18.7 | | |

| | | | |
|---|---|---|---|
| TEST CONDUCTED FOR: NASA, OFFICE OF ADVANCED RESEARCH AND TECHNOLOGY | | | DATE: 3-31-65 |
| TEST: INITIAL MEAS. - D.C. PARAMETER CHARACTERISTICS | SAMPLE NUMBER: NOTED | | BAROM. PRESS. IN. HG. |
| PART NAME & NUMBER: DTL NAND/NOR GATE - SE102K | TEST MEDIUM: AIR | | WET BULB TEMP. 61°F |
| MANUFACTURER: C | TEST TEMP. 74° C. ☐ F. ☒ | | DRY BULB TEMP. 74°F |
| ENGINEER | TECHNICIAN: TE Hooker | INSPECTOR | |
| REF. SPEC. | | DATA SHEET NUMBER | |

JOB NUMBER Ao-138-AE PAGE OF TEST REPORT NO. TR1-1188

601-2
1/64

GENERAL PRECISION, INC.
LIBRASCOPE GROUP

# ENVIRONMENTAL LABORATORY DATA SHEET

TEST CONDITIONS:
IF RETEST CHECK ☐

GROUP II

| SAMPLE NUMBER | $BV_7$ | $BV_8$ | $BV_9$ | $BV_{CEO}$ |
|---|---|---|---|---|
| | VOLTS | VOLTS | VOLTS | VOLTS |
| 26 | 16.2* | 18.9 | 18.9 | 18.5 |
| 27 | 19.3 | 19.3 | 19.3 | 19.0 |
| 28 | 19.1 | 19.1 | 19.1 | 17.8 |
| 29 | 19.0 | 19.0 | 19.1 | 18.7 |
| 30 | 18.9 | 18.9 | 18.8 | 18.6 |
| 31 | 18.2 | 18.2 | 18.2 | 18.1 |
| 32 | 19.3 | 19.3 | 19.3 | 18.9 |
| 33 | 18.9 | 18.9 | 18.8 | 11.3 |
| 34 | 18.9 | 18.4 | 19.0 | 18.6 |
| 35 | 18.9 | 19.1 | 19.0 | 18.7 |
| 36 | 18.3 | 18.3 | 18.3 | 18.3 |
| 37 | 18.9 | 18.9 | 18.9 | 18.7 |
| 38 | 18.2 | 18.1 | 18.2 | 18.2 |
| 39 | 19.2 | 19.2 | 19.2 | 18.9 |
| 40 | 19.1 | 19.1 | 19.1 | 16.4 |
| 41 | 19.2 | 19.2 | 19.2 | 18.9 |
| 42 | 19.4 | 19.4 | 19.4 | 11.7 |
| 43 | 18.8 | 18.8 | 18.9 | 18.6 |
| 44 | 18.9 | 19.0 | 19.0 | 18.8 |
| 45 | 18.8 | 18.8 | 18.7 | 16.2 |

* ERRATIC

| | | |
|---|---|---|
| TEST CONDUCTED FOR: NASA, OFFICE OF ADVANCED RESEARCH AND TECHNOLOGY | | DATE: 3-31-65 |
| TEST: INITIAL MEAS.- D.C. PARAMETER CHARACTERISTICS | SAMPLE NUMBER: NOTED | BAROM. PRESS. IN. HG. |
| PART NAME & NUMBER: DTL NAND/NOR GATE - SE102K | TEST MEDIUM: AIR | WET BULB TEMP. 61°F |
| MANUFACTURER: C | TEST TEMP. 74° C. ☐ F. ☒ | DRY BULB TEMP. 74°F |
| ENGINEER | TECHNICIAN: F. E. Nakin | INSPECTOR |
| REF. SPEC. | | DATA SHEET NUMBER |

JOB NUMBER AO-138-AE PAGE OF TEST REPORT NO. TR1-1188

601-2
1/64

GENERAL PRECISION, INC.
LIBRASCOPE GROUP

# ENVIRONMENTAL LABORATORY DATA SHEET

TEST CONDITIONS:
IF RETEST CHECK ☐

| SAMPLE NUMBER | $BV_T$ | $BV_8$ | $BV_9$ | $BV_{CBO}$ |
|---|---|---|---|---|
| 46 | 19.0 | 19.1 | 19.1 | 18.7 |
| 47 | 19.7 | 19.8 | 19.8 | 19.4 |
| 48 | 19.3 | 19.3 | 19.3 | 19.0 |
| 49 | 19.3 | 19.3 | 19.3 | 18.9 |
| 50 | 19.8 | 19.7 | 19.7 | 19.3 |
| 51 | 18.9 | 18.8 | 19.0 | 18.7 |
| 52 | 19.2 | 19.1 | 19.1 | 18.8 |
| 53 | 19.4 | 19.4 | 19.5 | 19.2 |
| 54 | 19.3 | 19.3 | 19.3 | 19.0 |
| 55 | 19.1 | 19.1 | 19.1 | 18.8 |
| 56 | 19.0 | 19.1 | 19.2 | 18.9 |
| 57 | 19.4 | 19.3 | 19.3 | 18.9 |
| 58 | 18.9 | 18.9 | 18.9 | 14.2 |
| 59 | 18.9 | 19.0 | 19.0 | 18.7 |
| 60 | 18.9 | 19.1 | 19.0 | 18.8 |
| 61 | 19.3 | 19.4 | 19.4 | 19.1 |
| 62 | 19.7 | 19.7 | 18.7 | 19.4 |
| 63 | 19.0 | 19.0 | 18.9 | 11.7 |
| 64 | 19.0 | 19.0 | 19.0 | 18.8 |
| 65 | 19.3 | 19.3 | 19.3 | 19.0 |

| CALIBRATION | | START | | COMPLETION | |
|---|---|---|---|---|---|
| | | 20 MEG | 20.00 | 20 MEG | 20.00 |
| | | 10 MEG | 10.00 | 10 MEG | 10.00 |
| | | 5 MEG | 5.01 | 5 MEG | 5.01 |

TEST CONDUCTED FOR: NASA, OFFICE OF ADVANCED RESEARCH AND TECHNOLOGY
DATE: 3-31-65
TEST: INITIAL MEAS.-D.C. PARAMETER CHARACTERISTICS
SAMPLE NUMBER: NOTED
BAROM. PRESS. IN. HG.
PART NAME & NUMBER
TEST MEDIUM: AIR
WET BULB TEMP.: 61°F
MANUFACTURER: C
TEST TEMP.: 75° C. ☐ F. ☒
DRY BULB TEMP.: 75°F
ENGINEER
TECHNICIAN: F. Naokem
INSPECTOR
REF. SPEC.
DATA SHEET NUMBER

JOB NUMBER Ao-138-AE PAGE OF TEST REPORT NO. TR1-1188

601-2
1/64

GENERAL PRECISION, INC
LIBRASCOPE GROUP

# ENVIRONMENTAL LABORATORY DATA SHEET

GROUP I - INSTRUMENTATION CONTROL

CALIBRATION CHECK - BREAKDOWN VOLTAGE AT 1UA

| CALIBRATION RESISTOR | VOLTAGE - FULL SCALE = 100 VOLTS | | |
|---|---|---|---|
| 20 MEG | 1999 ' | 1999 ' | 1999 ' |
| 10 MEG | 0999 ' | 0998 ' | 0998 ' |
| 5 MEG | 0499 ' | 0500 ' | 0499 ' |

| SAMPLE NUMBER | BV7 | VOLTAGE - FULL SCALE = 100 VOLTS BV8 | BV9 | BVCBO |
|---|---|---|---|---|
| 1 | 1828 ' | 1726 ' | 1802 ' | 1810 ' |
| 2 | 1917 ' | 1914 ' | 1920 ' | 1889 ' |
| 3 | 1851 ' | 1387 ' | 1837 ' | 1823 ' |
| 4 | 1787 ' | 1802 ' | 1802 ' | 1796 ' |
| 5' | 1819 ' | 1828 ' | 1825 ' | 1814 ' |

| | | |
|---|---|---|
| TEST CONDUCTED FOR: NASA, OFFICE OF ADVANCED RESEARCH AND TECHNOLOGY | | DATE: 31 MAR 1965 |
| TEST: INITIAL MEAS. - DC PARAMETER CHARACTERISTICS | SAMPLE NUMBER: NOTED | BAROM. PRESS: in. HG. |
| PART NAME & NUMBER: DTL NAND/NOR GATE - SE102K | TEST MEDIUM: AIR | WET BULB TEMP: 60°F |
| MANUFACTURER: C | TEST TEMP: 70° C. ☐ F. ☒ | DRY BULB TEMP: 70°F |
| ENGINEER: | TECHNICIAN: L. Hayn | INSPECTOR: |
| REF. SPEC. | | DATA SHEET NUMBER: |

JOB NUMBER A0-138-AE PAGE OF TEST REPORT NO. TR1-1188

NC 2
1/64

GENERAL PRECISION, INC
LIBRASCOPE GROUP

# ENVIRONMENTAL LABORATORY DATA SHEET

GROUP IV -,TEMP STEP STRESS GROUP

| SAMPLE NUMBER | BV7 | VOLTAGE - FULL SCALE = 100 VOLTS BV8 | BV9 | BVCBO |
|---|---|---|---|---|
| 66 | 1959 ' | 1953 ' | 1963 ' | 1906 ' |
| 67 | 1901 ' | 1909 ' | 1905 ' | 3000 ' |
| 68 | 1990 ' | 1992 ' | 1993 ' | 1462 ' |
| 69 | 1889 ' | 1887 ' | 1886 ' | 1860 ' |
| 70 | 1928 ' | 1925 ' | 1922 ' | 1890 ' |
| 71 | 1845 ' | 1844 ' | 1837 ' | 1836 ' |
| 72 | 1885 ' | 1879 ' | 1885 ' | 1861 ' |
| 73 | 1886 ' | 1889 ' | 1890 ' | 1862 ' |
| 74 | 1835 ' | 1834 ' | 1835 ' | 1213 ' |
| 75 | 1903 ' | 1907 ' | 1899 ' | 1872 ' |
| 76 | 1893 ' | 1892 ' | 1894 ' | 1599 ' |
| 77 | 1893 ' | 1897 ' | 1901 ' | 1877 ' |
| 78 | 1931 ' | 1935 ' | 1936 ' | 1255 ' |
| 79 | 1836 ' | 1832 ' | 1810 ' | 1813 ' |
| 80 | 1907 ' | 1925 ' | 1931 ' | 1904 ' |

| | | |
|---|---|---|
| TEST CONDUCTED FOR: NASA, OFFICE OF ADVANCED REASEARCH AND TECHNOLOGY | | DATE: 31 MAR 1965 |
| TEST: INITIAL MEAS. - DC PARAMETER CHARACTERISTICS | SAMPLE NUMBER: NOTED | BAROM. PRESS: HL NO. |
| PART NAME & NUMBER: DTL NAND/NOR GATE — SE102K | TEST MEDIUM: AIR | WET BULB TEMP.: 60°F |
| MANUFACTURER: C | TEST TEMP.: 70 C. ☐ F. ☒ | DRY BULB TEMP.: 70°F |
| ENGINEER | TECHNICIAN: S. Hayn | INSPECTOR |
| REF. SPEC. | | DATA SHEET NUMBER |

JOB NUMBER Ao-138-AE PAGE OF TEST REPORT NO. TR1-1188

601-2
1/64

GENERAL PRECISION, INC
LIBRASCOPE GROUP

# ENVIRONMENTAL LABORATORY DATA SHEET

GROUP IV - TEMP STEP STRESS GROUP

| SAMPLE NUMBER | BV7 | VOLTAGE - FULL SCALE = 100 VOLTS BV8 | BV9 | BVCBO |
|---|---|---|---|---|
| 81 | 1939 ' | 1940 ' | 1938 ' | 1899 ' |
| 82 | 1888 ' | 1883 ' | 1885 ' | 1848 ' |
| 83 | 1883 ' | 1885 ' | 1886 ' | 1856 ' |
| 84 | 1898 ' | 1908 ' | 1910 ' | 1887 ' |
| 85 | 1948 ' | 1946 ' | 1953 ' | 1595 ' |
| 86 | 1889 ' | 1886 ' | 1885 ' | 1861 ' |
| 87 | 1905 ' | 1909 ' | 1901 ' | 1306 ' |
| 88 | 1885 ' | 1881 ' | 1885 ' | 1326 ' |
| 89 | 1885 ' | 1885 ' | 1883 ' | 1818 ' |
| 90 | 1918 ' | 1912 ' | 1924 ' | 1885 ' |
| 91 | 1899 ' | 1898 ' | 1896 ' | 1873 ' |
| 92 | 1890 ' | 1893 ' | 1892 ' | 0103 ' |
| 93 | 1970 ' | 1972 ' | 1973 ' | 1828 ' |
| 94 | 1888 ' | 1896 ' | 1886 ' | 1860 ' |
| 95 | 1890 ' | 1895 ' | 1892 ' | 1863 ' |
| 96 | 1576 ' | 1909 ' | 1918 ' | 1682 ' |
| 97 | 1934 ' | 1935 ' | 1932 ' | 1888 ' |
| 98 | 1903 ' | 1905 ' | 1901 ' | 1234 ' |
| 99 | 1954 ' | 1937 ' | 1957 ' | 1909 ' |
| 100' | 1913 ' | 1915 ' | 1914 ' | 1884 ' |

| | | |
|---|---|---|
| TEST CONDUCTED FOR: NASA OFFICE OF ADVANCED RESEARCH AND TECHNOLOGY | | DATE: 31 MAR 1965 |
| TEST: INITIAL MEAS. - D.C. PARAMETER CHARACTERISTICS | SAMPLE NUMBER: NOTED | BAROM. PRESS. IN HG |
| PART NAME & NUMBER: DTL NAND/NOR GATE - SE102K | TEST MEDIUM: AIR | WET BULB TEMP: 60 °F |
| MANUFACTURER: C | TEST TEMP.: 70 ° C. ☐ F. ☒ | DRY BULB TEMP.: 70 °F |
| ENGINEER | TECHNICIAN: L. Hayes | INSPECTOR |
| REF. SPEC. | | DATA SHEET NUMBER |

JOB NUMBER A0-138-AE PAGE OF TEST REPORT NO. TR1-1188

601-2
1/64

GENERAL PRECISION, INC
LIBRASCOPE GROUP

# ENVIRONMENTAL LABORATORY DATA SHEET

## GROUP IV - TEMP STEP STRESS GROUP

VOLTAGE - FULL SCALE = 100 VOLTS

| SAMPLE NUMBER | BV7 | BV8 | BV9 | BVCBO |
|---|---|---|---|---|
| 101 | 1889 ' | 1892 ' | 1892 ' | 1865 ' |
| 102 | 1893 ' | 1893 ' | 1893 ' | 1858 ' |
| 103 | 1899 ' | 1896 ' | 1888 ' | 1866 ' |
| 104 | 1918 ' | 1878 ' | 1914 ' | 1886 ' |
| 105 | 1887 ' | 1889 ' | 1888 ' | 1332 ' |
| 106 | 1892 ' | 1893 ' | 1893 ' | 1866 ' |
| 107 | 1880 ' | 1892 ' | 1890 ' | 1863 ' |
| 108 | 1899 ' | 1895 ' | 1940 ' | 1884 ' |
| 109 | 1834 ' | 1819 ' | 1799 ' | 1818 ' |
| 110 | 1929 ' | 1936 ' | 1940 ' | 1912 ' |
| 111 | 1892 ' | 1879 ' | 1893 ' | 1854 ' |
| 112 | 1899 ' | 1899 ' | 1899 ' | 1872 ' |
| 113 | 1879 ' | 1879 ' | 1889 ' | 1857 ' |
| 114 | 1921 ' | 1914 ' | 1919 ' | 1894 ' |
| 115 | 1962 ' | 1903 ' | 1967 ' | 1499 ' |

## CALIBRATION CHECK

VOLTAGE FULL SCALE = 100 VOLTS

| PROGRAM RESISTOR | | | | |
|---|---|---|---|---|
| 20 MEG | 1999 ' | 1999 ' | 1998 ' | 1999 ' |
| 10 MEG | 0997 ' | 0998 ' | 0998 ' | 0998 ' |
| 5 MEG' | 0499 ' | 0500 ' | 0498 ' | 0498 ' |

| | | |
|---|---|---|
| TEST CONDUCTED FOR: NASA OFFICE OF ADVANCED RESEARCH AND TECHNOLOGY | | DATE: 31 MAR 1965 |
| TEST: INTIAL MEAS.- DC PARAMETER CHARACTERISTICS | SAMPLE NUMBER: NOTED | BAROM. PRESS. IN HG |
| PART NAME & NUMBER: DTL NAND/NOR GATE — SE102K | TEST MEDIUM: AIR | WET BULB TEMP: 60°F |
| MANUFACTURER: C | TEST TEMP: 70° C. ☐ F. ☒ | DRY BULB TEMP.: 70°F |
| ENGINEER | TECHNICIAN: L. Hayn | INSPECTOR |
| REF. SPEC. | | DATA SHEET NUMBER |

JOB NUMBER Ao-138-AE PAGE OF TEST REPORT NO. TR1-1188

651-2
1/64

GENERAL PRECISION, INC.
LIBRASCOPE GROUP

# ENVIRONMENTAL LABORATORY DATA SHEET

ir @ 4v

TEST CONDITIONS:
IF RETEST CHECK ☐ READINGS IN NANOAMPS.

| | # | $I_7$ | $I_8$ | $I_9$ | $I_{CBO}$ | $I_3$ | | | |
|---|---|---|---|---|---|---|---|---|---|
| GROUP I | 1 | 5.0 | 4.9 | 5.8 | 25.8 | 26.7 | | | |
| | 2 | 3.6 | 3.6 | 3.7 | 26.6 | 27.6 | | | |
| | 3 | 10.6 | 15.1 | 10.6 | 19.0 | 19.6 | | | |
| | 4 | 2.7 | 2.7 | 2.8 | 17.1 | 17.8 | | | |
| | 5 | 2.6 | 2.7 | 2.7 | 16.2 | 16.9 | | | |
| | | | | | | | | | |
| | | | | | | | | | |
| | CALIBRATION WITH 10 MEG OHM | | | | | | | | |
| | | | | | | | | | |
| | 1.0V | | 99.96 | na | | 1.0V | 101.1 | | |
| | .5V | | 49.91 | na | | .5V | 50.02 | | |

| | | |
|---|---|---|
| TEST CONDUCTED FOR NASA, OFFICE OF ADVANCED RESEARCH AND TECHNOLOGY | | DATE 4-1-65 |
| TEST INITIAL MEASUREMENTS - D.C PARAMETERS | SAMPLE NUMBER NOTED | BAROM. PRESS. IN. HG. |
| PART NAME & NUMBER DTL NAND/NOR GATE - SE 102K | TEST MEDIUM AIR | WET BULB TEMP. 65°F |
| MANUFACTURER C | TEST TEMP. 78° C. ☐ F. ☒ | DRY BULB TEMP. 78°F |
| ENGINEER | TECHNICIAN [illegible] | INSPECTOR |
| REF. SPEC. | | DATA SHEET NUMBER |

JOB NUMBER AO-138-AE PAGE OF TEST REPORT NO. TR1-1188

601-2
1/64

GENERAL PRECISION, INC.
LIBRASCOPE GROUP

# ENVIRONMENTAL LABORATORY DATA SHEET

$I_R$ @ 4V

GROUP II

TEST CONDITIONS:
IF RETEST CHECK ☐ READINGS IN NANOAMPS

| # | $I_7$ | $I_8$ | $I_9$ | $I_{CBO}$ | $I_3$ | | | |
|---|---|---|---|---|---|---|---|---|
| 26 | 4.6 | 4.6 | 4.7 | 23.7 | 24.4 | | | |
| 27 | 3.6 | 3.4 | 3.5 | 27.8 | 28.6 | | | |
| 28 | 3.3 | 3.2 | 3.3 | 25.9 | 26.4 | | | |
| 29 | 3.2 | 3.2 | 3.2 | 23.7 | 24.4 | | | |
| 30 | 3.5 | 3.6 | 3.7 | 22.7 | 23.6 | | | |
| 31 | 2.7 | 2.7 | 2.7 | 15.2 | 15.7 | | | |
| 32 | 3.5 | 3.6 | 3.7 | 26.9 | 27.1 | | | |
| 33 | 3.3 | 3.2 | 3.3 | 24.2 | 26.0 | | | |
| 34 | 12.3 | 12.4 | 12.5 | 23.7 | 24.3 | | | |
| 35 | 3.3 | 3.3 | 3.3 | 23.7 | 24.2 | | | |
| 36 | 2.3 | 2.4 | 2.4 | 14.7 | 15.1 | | | |
| 37 | 3.4 | 3.3 | 3.4 | 22.1 | 22.8 | | | |
| 38 | 2.4 | 2.4 | 2.5 | 14.2 | 14.7 | | | |
| 39 | 2.9 | 3.0 | 3.0 | 23.5 | 24.1 | | | |
| 40 | 14.3 | 14.5 | 14.7 | 25.6 | 26.5 | | | |
| 41 | 3.5 | 3.5 | 3.6 | 24.2 | 24.8 | | | |
| 42 | 3.3 | 3.3 | 3.2 | 25.2 | 25.6 | | | |
| 43 | 3.0 | 3.1 | 3.1 | 22.5 | 23.1 | | | |
| 44 | 2.9 | 2.8 | 2.8 | 22.6 | 23.0 | | | |
| 45 | 3.2 | 3.2 | 3.4 | 24.6 | 25.1 | | | |
| | | CALIBRATION | | WITH | 10 MEGOHMS | | | |
| | | 1.0V | 99.9 | NA | | | | |
| | | 0.5V | 49.9 | NA | | | | |

TEST CONDUCTED FOR: NASA OFFICE OF ADVANCED RESEARCH AND TECHNOLOGY
DATE: 4-2-65
TEST: INITIAL MEAS. — D.C. PARAMETER CHARACTERISTICS
SAMPLE NUMBER: NOTED
BAROM. PRESS. IN. HG.
PART NAME & NUMBER: DTL NAND/NOR GATE — SE102K
TEST MEDIUM: AIR
WET BULB TEMP. 65°F
MANUFACTURER: C
TEST TEMP. 78° C. ☐ F. ☒
DRY BULB TEMP. 78°F
ENGINEER
TECHNICIAN: S. Hayn
INSPECTOR
REF. SPEC.
DATA SHEET NUMBER

JOB NUMBER A0-138-AE PAGE OF TEST REPORT NO. TR1-1188

601-2
1/64

GENERAL PRECISION, INC.
LIBRASCOPE GROUP

# ENVIRONMENTAL LABORATORY DATA SHEET

$V_R$ @ 4V

TEST CONDITIONS:
IF RETEST CHECK ☐

READINGS IN NANOAMPS.

| | # | $I_7$ | $I_8$ | $I_9$ | $I_{CBO}$ | $I_3$ | | | |
|---|---|---|---|---|---|---|---|---|---|
| GROUP II | 6 | 2.7 | 2.7 | 2.7 | 15.3 | 15.9 | | | |
| | 7 | 3.2 | 3.3 | 3.3 | 23.6 | 24.6 | | | |
| | 8 | 3.5 | 3.5 | 3.5 | 25.2 | 25.9 | | | |
| | 9 | 2.7 | 2.7 | 2.8 | 27.6 | 28.3 | | | |
| | 10 | 3.1 | 3.3 | 3.2 | 25.9 | 26.8 | | | |
| | 11 | 3.1 | 3.1 | 3.1 | 22.6 | 23.3 | | | |
| | 12 | 3.3 | 3.4 | 3.4 | 24.2 | 25.0 | | | |
| | 13 | 3.4 | 3.4 | 3.4 | 25.0 | 25.9 | | | |
| | 14 | 3.8 | 3.7 | 3.7 | 26.4 | 27.4 | | | |
| | 15 | 3.0 | 3.0 | 3.1 | 23.5 | 24.3 | | | |
| | 16 | 3.2 | 3.2 | 3.3 | 39.7 | 36.5 | | | |
| | 17 | 3.3 | 3.3 | 3.3 | 24.8 | 25.7 | | | |
| | 18 | 3.5 | 3.4 | 3.4 | 26.5 | 27.5 | | | |
| | 19 | 3.3 | 3.4 | 3.3 | 25.1 | 26.0 | | | |
| | 20 | 3.4 | 3.4 | 3.5 | 25.2 | 25.6 | | | |
| | 21 | 3.5 | 3.4 | 3.4 | 27.5 | 28.6 | | | |
| | 22 | 3.0 | 3.1 | 3.1 | 24.0 | 24.8 | | | |
| | 23 | 3.2 | 3.1 | 3.1 | 23.9 | 24.9 | | | |
| | 24 | 3.3 | 3.3 | 3.4 | 27.0 | 28.0 | | | |
| | 25 | 4.4 | 4.5 | 4.5 | 24.2 | 25.0 | | | |
| | | | | | | | | | |
| | | CALIBRATION | | WITH | 10 MEG | OHMS | | | |
| | | 1.0 V | 100.1 | na | | 1.0 V | 100.1 | | |
| | | .5 V | 49.97 | na | | .5 V | 49.97 | | |
| | | | PRE | | | POST | | | |
| | | | | | | | | | |

| | | |
|---|---|---|
| TEST CONDUCTED FOR: NASA, OFFICE OF ADVANCED RESEARCH & TECHNOLOGY | | DATE: 4-1-65 |
| TEST: INITIAL MEAS.—D.C PARAMETER CHARACTERISTICS | SAMPLE NUMBER: NOTED | BAROM. PRESS. IN. HG. |
| PART NAME & NUMBER: DTL NAND/NOR GATE - SE 102K | TEST MEDIUM: AIR | WET BULB TEMP. 65°F |
| MANUFACTURER: C | TEST TEMP. 78° C. ☐ F. ☒ | DRY BULB TEMP. 78°F |
| ENGINEER | TECHNICIAN: T. Hasbrouck | INSPECTOR |
| REF. SPEC. | | DATA SHEET NUMBER |

JOB NUMBER Ao-138-AE PAGE OF TEST REPORT NO. TR1-1188

601-2
1/64

GENERAL PRECISION, INC.
LIBRASCOPE GROUP

# ENVIRONMENTAL LABORATORY DATA SHEET

$I_R$ @ 4V

TEST CONDITIONS:
IF RETEST CHECK ☐ READINGS IN NANOAMPS

| | II | $I_7$ | $I_8$ | $I_9$ | $I_{CBO}$ | $I_3$ | | | |
|---|---|---|---|---|---|---|---|---|---|
| GROUP I | 1 | 4.9 | 4.9 | 4.9 | 20.6 | 21.5 | | | |
| | 2 | 3.3 | 3.2 | 3.2 | 23.8 | 24.2 | | | |
| | 3 | 8.9 | 13.2 | 8.9 | 15.9 | 16.4 | | | |
| | 4 | 2.4 | 2.4 | 2.4 | 15.0 | 15.4 | | | |
| | 5 | 2.3 | 2.3 | 2.3 | 14.6 | 15.0 | | | |
| | | | CALIBRATION WITH 10 MEGOHMS | | | | | | |
| | | | 1.0V | 99.9 | NA | | | | |
| | | | 0.5V | 49.9 | NA | | | | |

| | | | |
|---|---|---|---|
| TEST CONDUCTED FOR NASA OFFICE OF ADVANCED RESEARCH AND TECHNOLOGY | | | DATE 4-2-65 |
| TEST INITIAL MEAS.-D.C. PARAMETER CHARACTERISTICS | SAMPLE NUMBER NOTED | | BAROM. PRESS. IN HG. |
| PART NAME & NUMBER DTL NAND/NOR GATE - SE102K | TEST MEDIUM AIR | | WET BULB TEMP. 64°F |
| MANUFACTURER C | TEST TEMP. 76° | C. ☐ F. ☒ | DRY BULB TEMP. 76°F |
| ENGINEER | TECHNICIAN L. Hayn | INSPECTOR | |
| REF. SPEC. | | DATA SHEET NUMBER | |

JOB NUMBER A0-138-AE PAGE OF TEST REPORT NO. TR1-1188

601-2
1/64

GENERAL PRECISION, INC.
LIBRASCOPE GROUP

# ENVIRONMENTAL LABORATORY DATA SHEET

IR @ 4V

GROUP III

TEST CONDITIONS:
IF RETEST CHECK ☐ READINGS IN NANOAMPS

| # | $I_7$ | $I_8$ | $I_9$ | $I_{CBO}$ | $I_3$ | | | |
|---|---|---|---|---|---|---|---|---|
| 46 | 3.5 | 3.5 | 3.4 | 25.7 | 26.5 | | | |
| 47 | 3.1 | 3.1 | 3.1 | 25.3 | 26.2 | | | |
| 48 | 3.0 | 3.0 | 3.0 | 22.8 | 23.2 | | | |
| 49 | 3.3 | 3.3 | 3.3 | 25.1 | 25.9 | | | |
| 50 | 3.4 | 3.4 | 3.4 | 26.1 | 26.6 | | | |
| 51 | 9.5 | 9.5 | 9.6 | 23.9 | 24.8 | | | |
| 52 | 3.4 | 3.5 | 3.4 | 25.9 | 26.3 | | | |
| 53 | 3.0 | 3.1 | 3.1 | 26.1 | 27.0 | | | |
| 54 | 3.3 | 3.3 | 3.3 | 25.9 | 26.4 | | | |
| 55 | 3.2 | 3.3 | 3.2 | 25.2 | 26.1 | | | |
| 56 | 3.4 | 3.3 | 3.3 | 24.5 | 24.8 | | | |
| 57 | 3.1 | 3.1 | 3.2 | 24.1 | 25.1 | | | |
| 58 | 3.2 | 3.1 | 3.2 | 22.7 | 22.6 | | | |
| 59 | 3.0 | 3.0 | 3.1 | 23.2 | 24.0 | | | |
| 60 | 3.5 | 3.4 | 3.5 | 24.3 | 24.6 | | | |
| 61 | 3.2 | 3.3 | 3.3 | 26.2 | 27.1 | | | |
| 62 | 8.8 | 8.7 | 9.3 | 20.1 | 20.5 | | | |
| 63 | 5.1 | 5.2 | 5.2 | 23.2 | 24.0 | | | |
| 64 | 3.7 | 3.7 | 3.6 | 24.6 | 24.8 | | | |
| 65 | 3.5 | 3.5 | 3.6 | 27.1 | 28.1 | | | |
| | | | | | | | | |
| | | CALIBRATION | | WITH | 10 MEGOHMS | | | |
| | | 1.0V | 100.1 | NA | | | | |
| | | 0.5V | 49.9 | NA | | | | |
| | | | | | | | | |
| | | | | | | | | |

| | | |
|---|---|---|
| TEST CONDUCTED FOR: NASA OFFICE OF ADVANCED RESEARCH AND TECHNOLOGY | | DATE 4-2-65 |
| TEST: INITIAL MEAS.-D.C. PARAMETER CHARACTERISTICS | SAMPLE NUMBER NOTED | BAROM. PRESS. IN. HG. |
| PART NAME & NUMBER: DTL NAND/NOR GATE - SE102K | TEST MEDIUM AIR | WET BULB TEMP. 64°F |
| MANUFACTURER: C | TEST TEMP. 76° C. ☐ F. ☒ | DRY BULB TEMP. 76°F |
| ENGINEER | TECHNICIAN L. Hayn | INSPECTOR |
| REF. SPEC. | | DATA SHEET NUMBER |

JOB NUMBER A0-138-AE PAGE OF TEST REPORT NO. TR1-1188

601-2
1/64

GENERAL PRECISION, INC.
LIBRASCOPE GROUP

# ENVIRONMENTAL LABORATORY DATA SHEET

$I_R$ @ 4V

GROUP I

TEST CONDITIONS:
IF RETEST CHECK ☐

READINGS IN NANOAMPS

| # | $I_7$ | $I_8$ | $I_9$ | $I_{CBO}$ | $I_3$ | | | |
|---|---|---|---|---|---|---|---|---|
| 1 | 5.2 | 5.2 | 5.2 | 22.8 | 23.6 | | | |
| 2 | 3.7 | 3.7 | 3.6 | 27.5 | 28.5 | | | |
| 3 | 10.5 | 15.1 | 10.5 | 18.9 | 19.3 | | | |
| 4 | 2.8 | 2.8 | 2.8 | 17.8 | 18.4 | | | |
| 5 | 2.6 | 2.6 | 2.7 | 16.7 | 17.2 | | | |
| | | | | | | | | |
| | | CALIBRATION | WITH | 10 MEGOHMS | | | | |
| | | 1.0V | 100.1 | NA | | | | |
| | | 0.5V | 49.9 | NA | | | | |

| | | | |
|---|---|---|---|
| TEST CONDUCTED FOR: NASA OFFICE OF ADVANCED RESEARCH AND TECHNOLOGY | | | DATE: 4-2-65 |
| TEST: INITIAL MEAS.-D.C. PARAMETER CHARACTERISTICS | SAMPLE NUMBER: NOTED | | BAROM. PRESS. IN. HG. |
| PART NAME & NUMBER: DTL NAND/NOR GATE- SE102K | TEST MEDIUM: AIR | | WET BULB TEMP. 65°F |
| MANUFACTURER: C | TEST TEMP. 79° C. ☐ F. ☒ | | DRY BULB TEMP. 79°F |
| ENGINEER | TECHNICIAN: S. Hayes | INSPECTOR | |
| REF. SPEC. | | DATA SHEET NUMBER | |

JOB NUMBER A0-138-AE PAGE OF TEST REPORT NO. TR1-1188

601-2
1/64

GENERAL PRECISION, INC.
LIBRASCOPE GROUP

# ENVIRONMENTAL LABORATORY DATA SHEET

$I_R$ @ 4V

GROUP IV

TEST CONDITIONS:
IF RETEST CHECK ☐ READINGS IN NANOAMPS

| # | $I_7$ | $I_8$ | $I_9$ | $I_{CBO}$ | $I_3$ | | | |
|---|---|---|---|---|---|---|---|---|
| 66 | 3.8 | 3.9 | 3.9 | 29.9 | 30.9 | | | |
| 67 | 3.1 | 3.2 | 3.2 | 23.6 | 24.4 | | | |
| 68 | 3.0 | 3.0 | 3.0 | 25.4 | 26.2 | | | |
| 69 | 2.9 | 2.8 | 2.8 | 21.5 | 22.2 | | | |
| 70 | 3.2 | 3.2 | 3.2 | 23.8 | 24.4 | | | |
| 71 | 2.4 | 2.4 | 2.4 | 14.4 | 14.9 | | | |
| 72 | 3.0 | 3.0 | 3.0 | 22.9 | 22.6 | | | |
| 73 | 2.9 | 2.9 | 3.0 | 22.0 | 22.6 | | | |
| 74 | 2.6 | 2.5 | 2.5 | 14.8 | 15.1 | | | |
| 75 | 3.2 | 3.2 | 3.3 | 24.9 | 25.2 | | | |
| 76 | 3.2 | 3.2 | 3.2 | 22.2 | 22.8 | | | |
| 77 | 3.4 | 3.5 | 3.4 | 24.9 | 25.2 | | | |
| 78 | 3.1 | 3.0 | 3.1 | 24.8 | 25.3 | | | |
| 79 | 2.4 | 2.4 | 2.5 | 17.1 | 17.6 | | | |
| 80 | 3.0 | 3.1 | 3.1 | 24.3 | 25.0 | | | |
| 81 | 3.0 | 3.1 | 3.1 | 24.1 | 24.5 | | | |
| 82 | 2.9 | 2.8 | 2.8 | 21.6 | 22.3 | | | |
| 83 | 2.9 | 2.9 | 2.9 | 22.0 | 22.8 | | | |
| 84 | 3.3 | 3.3 | 3.2 | 23.8 | 24.4 | | | |
| 85 | 3.0 | 3.0 | 3.1 | 25.0 | 25.8 | | | |
| | | | | | | | | |
| | | CALIBRATION WITH 10 MEGOHMS | | | | | | |
| | | | 1.0V | 100.0 | NA | | | |
| | | | 0.5V | 49.9 | NA | | | |
| | | | | | | | | |
| | | | | | | | | |

| | | |
|---|---|---|
| TEST CONDUCTED FOR: NASA OFFICE OF ADVANCED OF RESEARCH AND TECHNOLOGY | | DATE: 4-2-65 |
| TEST: INITIAL MEAS. - D.C. PARAMETER CHARACTERISTICS | SAMPLE NUMBER: NOTED | BAROM. PRESS. IN. HG. |
| PART NAME & NUMBER: DTL NAND/NOR GATE - SE102K | TEST MEDIUM: AIR | WET BULB TEMP. 65°F |
| MANUFACTURER: C | TEST TEMP. 79° C. ☐ F. ☒ | DRY BULB TEMP. 79°F |
| ENGINEER | TECHNICIAN: S. Hayes | INSPECTOR |
| REF. SPEC. | | DATA SHEET NUMBER |

JOB NUMBER A0-138-AE PAGE OF TEST REPORT NO. TR1-1188

601-2
1/64

GENERAL PRECISION, INC.
LIBRASCOPE GROUP

# ENVIRONMENTAL LABORATORY DATA SHEET

$I_R$ @ 4V

GROUP IV

TEST CONDITIONS:
IF RETEST CHECK ☐ READINGS IN NANOAMPS

| # | $I_7$ | $I_8$ | $I_9$ | $I_{CBO}$ | $I_3$ | | | |
|---|---|---|---|---|---|---|---|---|
| 86 | 3.2 | 3.2 | 3.2 | 22.6 | 23.3 | | | |
| 87 | 3.5 | 3.6 | 3.5 | 25.6 | 26.2 | | | |
| 88 | 3.4 | 3.4 | 3.4 | 24.5 | 25.4 | | | |
| 89 | 3.3 | 3.3 | 3.3 | 26.3 | 26.6 | | | |
| 90 | 3.5 | 3.5 | 3.4 | 24.1 | 24.5 | | | |
| 91 | 3.2 | 3.2 | 3.2 | 24.4 | 25.2 | | | |
| 92 | 5.5 | 5.8 | 5.5 | 22.1 | 22.6 | | | |
| 93 | 3.7 | 3.8 | 3.7 | 29.6 | 29.7 | | | |
| 94 | 3.3 | 3.3 | 3.3 | 23.1 | 23.8 | | | |
| 95 | 2.9 | 2.9 | 2.9 | 22.6 | 23.1 | | | |
| 96 | 5.0 | 5.1 | 5.1 | 23.6 | 24.7 | | | |
| 97 | 2.8 | 2.8 | 2.8 | 24.6 | 25.3 | | | |
| 98 | 3.1 | 3.1 | 3.0 | 22.1 | 22.6 | | | |
| 99 | 2.7 | 2.7 | 2.7 | 23.7 | 24.3 | | | |
| 100 | 15.3 | 15.1 | 14.9 | 36.8 | 38.4 | | | |
| 101 | 3.0 | 3.0 | 3.0 | 21.9 | 22.6 | | | |
| 102 | 3.2 | 3.2 | 3.2 | 22.1 | 22.4 | | | |
| 103 | 3.4 | 3.4 | 3.4 | 23.8 | 24.6 | | | |
| 104 | 3.1 | 3.1 | 3.1 | 24.4 | 25.1 | | | |
| 105 | 2.8 | 2.8 | 2.8 | 22.4 | 23.0 | | | |
| | | | | | | | | |
| | | CALIBRATION | WITH | 10 MEGOHMS | | | | |
| | | | 1.0V | 99.8 | NA | | | |
| | | | 0.5V | 49.8 | NA | | | |

| | | | |
|---|---|---|---|
| TEST CONDUCTED FOR: NASA OFFICE OF ADVANCED RESEARCH AND TECHNOLOGY | | | DATE: 4-2-65 |
| TEST: INITIAL MEAS.-D.C. PARAMETER CHARACTERISTICS | SAMPLE NUMBER: NOTED | | BAROM. PRESS. IN. HG. |
| PART NAME & NUMBER: DTL NAND/NOR GATE — SE102K | TEST MEDIUM: AIR | | WET BULB TEMP.: 65°F |
| MANUFACTURER: C | TEST TEMP.: 77° C. ☐ F. ☒ | | DRY BULB TEMP.: 77°F |
| ENGINEER | TECHNICIAN: S. Hayn | INSPECTOR | |
| REF. SPEC. | | DATA SHEET NUMBER | |

JOB NUMBER A0-138-AE PAGE OF TEST REPORT NO. TR1-1188

601-2
1/64

GENERAL PRECISION, INC.
LIBRASCOPE GROUP

# ENVIRONMENTAL LABORATORY DATA SHEET

$I_R$ @ 4V

GROUP IV

TEST CONDITIONS:
IF RETEST CHECK ☐ READINGS IN NANOAMPS

| # | $I_7$ | $I_8$ | $I_9$ | $I_{CBO}$ | $I_3$ | | | |
|---|---|---|---|---|---|---|---|---|
| 106 | 3.2 | 2.9 | 2.9 | 23.8 | 24.4 | | | |
| 107 | 3.1 | 3.1 | 3.1 | 22.3 | 23.0 | | | |
| 108 | 3.0 | 2.9 | 3.0 | 22.2 | 22.8 | | | |
| 109 | 2.3 | 2.3 | 2.3 | 13.9 | 14.2 | | | |
| 110 | 3.0 | 3.0 | 3.1 | 25.1 | 25.9 | | | |
| 111 | 3.0 | 3.1 | 3.0 | 22.0 | 22.5 | | | |
| 112 | 3.3 | 3.3 | 3.3 | 24.6 | 25.3 | | | |
| 113 | 3.0 | 3.0 | 2.9 | 21.6 | 22.1 | | | |
| 114 | 3.0 | 2.9 | 3.0 | 23.5 | 24.3 | | | |
| 115 | 9.9 | 10.6 | 9.7 | 34.1 | 33.3 | | | |
| | CALIBRATION WITH 10 MEGOHMS | | | | | | | |
| | | 1.0 V | 100.0 | NA | | | | |
| | | 0.5V | 49.9 | NA | | | | |

| | | | |
|---|---|---|---|
| TEST CONDUCTED FOR NASA OFFICE OF ADVANCED RESEARCH AND TECHNOLOGY | | | DATE 4-2-65 |
| TEST INITIAL MEAS.-D.C. PARAMETER CHARACTERISTICS | SAMPLE NUMBER NOTED | | BAROM. PRESS. IN. HG. |
| PART NAME & NUMBER DTL NAND/NOR GATE – SE102K | TEST MEDIUM AIR | | WET BULB TEMP. 65°F |
| MANUFACTURER C | TEST TEMP. 77° C. ☐ F. ☒ | | DRY BULB TEMP. 77°F |
| ENGINEER | TECHNICIAN S. Hayes | INSPECTOR | |
| REF. SPEC. | | DATA SHEET NUMBER | |

JOB NUMBER Ao-138-AE PAGE OF TEST REPORT NO. TR1-1188

601-2
1/64

GENERAL PRECISION, INC
LIBRASCOPE GROUP

# ENVIRONMENTAL LABORATORY DATA SHEET

GROUP I - INSTRUMENTATION CONTROL

PARAMETER: RESISTANCE MEASUREMENTS AT 1 MA

CALIBRATION CHECK AT 1 MA

| CALIBRATION RESISTOR | VOLTAGE - FULL SCALE = 100 VOLTS | | |
|---|---|---|---|
| 2000 OHMS | 0201 ' | 0202 ' | 0199 ' |
| 1000 OHMS | 0103 ' | 0099 ' | 0099 ' |
| 500 OHMS | 0050 ' | 0051 ' | 0052 ' |

| SAMPLE NUMBER | RESISTANCE - FULL SCALE = 100K OHMS | | |
|---|---|---|---|
| | R1 | R2 | R3 |
| 1 | 0196 ' | 0185 ' | 2125 ' |
| 2 | 0200 ' | 0192 ' | 2163 ' |
| 3 | 0194 ' | 0179 ' | 2062 ' |
| 4 | 0215 ' | 0196 ' | 2100 ' |
| 5' | 0206 ' | 0192 ' | 2106 ' |

| | | |
|---|---|---|
| TEST CONDUCTED FOR: NASA, OFFICE OF ADVANCED RESEARCH AND TECHNOLOGY | | DATE: 4-2-65 |
| TEST: INITIAL MEAS.-DC PARAMETER CHARACTERISTICS | SAMPLE NUMBER: NOTED | BAROM. PRESS: IN HG |
| PART NAME & NUMBER: DTL NAND/NOR GATE - SE 102K | TEST MEDIUM: AIR | WET BULB TEMP: 60°F |
| MANUFACTURER: C | TEST TEMP: 72° C F | DRY BULB TEMP: 72°F |
| ENGINEER | TECHNICIAN: KBlom | INSPECTOR |
| REF SPEC | | DATA SHEET NUMBER |

JOB NUMBER A0-138-AE PAGE OF TEST REPORT NO. TR1-1188

GENERAL PRECISION, INC
LIBRASCOPE GROUP

# ENVIRONMENTAL LABORATORY DATA SHEET

GROUP II - LIFE TEST GROUP

PARAMETER: RESISTANCE MEASUREMENTS AT 1 MA

| SAMPLE NUMBER | R1 | RESISTANCE - FULL SCALE = 100K OHMS R2 | R3 |
|---|---|---|---|
| 6 | 0210 ' | 0200 ' | 2121 ' |
| 7 | 0193 ' | 0186 ' | 2115 ' |
| 8 | 0199 ' | 0189 ' | 2129 ' |
| 9 | 0204 ' | 0196 ' | 1991 ' |
| 10 | 0196 ' | 0182 ' | 2113 ' |
| 11 | 0204 ' | 0191 ' | 2149 ' |
| 12 | 0199 ' | 0186 ' | 2144 ' |
| 13 | 0201 ' | 0189 ' | 2144 ' |
| 14 | 0199 ' | 0182 ' | 2065 ' |
| 15 | 0200 ' | 0188 ' | 2139 ' |
| 16 | 0201 ' | 0188 ' | 2143 ' |
| 17 | 0203 ' | 0190 ' | 2152 ' |
| 18 | 0185 ' | 0179 ' | 2063 ' |
| 19 | 0200 ' | 0190 ' | 2132 ' |
| 20 | 0199 ' | 0186 ' | 2099 ' |
| 2 21 | 0206 ' | 0196 ' | 2179 ' |
| 22 | 0206 ' | 0193 ' | 2168 ' |
| 23 | 0200 ' | 0187 ' | 2123 ' |
| 24 | 0212 ' | 0195 ' | 2227 ' |
| 25' | 0204 ' | 0191 ' | 2152 ' |

| | | |
|---|---|---|
| TEST CONDUCTED FOR: NASA, OFFICE OF ADVANCED RESEARCH AND TECHNOLOGY | | DATE 4-2-65 |
| TEST: INITIAL MEAS.-DC. PARAMETER CHARACTERISTICS | SAMPLE NUMBER NOTED | BAROM. PRESS IN. HG |
| PART NAME & NUMBER: DTL NAND/NOR GATE - SE 102K | TEST MEDIUM AIR | WET BULB TEMP 60°F |
| MANUFACTURER: G | TEST TEMP. 72° C F X | DRY BULB TEMP 72°F |
| ENGINEER | TECHNICIAN Bloom | INSPECTOR |
| REF SPEC | | DATA SHEET NUMBER |

JOB NUMBER A0-138-AE PAGE OF TEST REPORT NO. TR1-1188

GENERAL PRECISION, INC
LIBRASCOPE GROUP

# ENVIRONMENTAL LABORATORY DATA SHEET

Z

GROUP II - LIFE TEST GROUP

PARAMETER: RESISTANCE MEASUREMENTS AT 1 MA

| SAMPLE NUMBER | R1 | RESISTANCE - FULL SCALE = 1+OOKOHMS R2 | R3 |
|---|---|---|---|
| 26 | 0194 ' | 0184 ' | 2078 ' |
| 27 | 0196 ' | 0184 ' | 2096 ' |
| 28 | 0199 ' | 0188 ' | 2115 ' |
| 29 | 0202 ' | 0187 ' | 2138 |
| 30 | 0198 ' | 0186 ' | 3020 ' |
| 31 | 0209 ' | 0198 ' | 2096 ' |
| 32 | 0196 ' | 0184 ' | 2070 ' |
| 33 | 0195 ' | 0184 ' | 2106 ' |
| 34 | 0197 ' | 0185 ' | 2101 ' |
| 35 | 0200 ' | 0190 ' | 2108 ' |
| 36 | 0210 ' | 0198 ' | 2123 ' |
| 37 | 0193 ' | 0184 ' | 2090 ' |
| 38 | 0211 ' | 0199 ' | 1380 ' |
| 39 | 0201 ' | 0190 ' | 2156 ' |
| 40 | 0209 ' | 0181 ' | 2108 ' |
| 41 | 0196 ' | 0185 ' | 2101 ' |
| 42 | 0197 ' | 0186 ' | 2096 ' |
| 43 | 0197 ' | 0185 ' | 2094 ' |
| 44 | 0208 ' | 0196 ' | 2186 ' |
| 45 | 0195 ' | 0182 ' | 2049 ' |

CALIBRATION CHECK

| CALIBRATION RESISTOR | | VOLTAGE - FULL SCALE = 10 0 VOLTS | |
|---|---|---|---|
| 2000 OHMS | 0201 ' | 0200 ' | 0201 ' |
| 1000 OHMS | 0100 ' | 0102 ' | 0101 ' |
| 500 OHMS' | 0049 ' | 0049 ' | 0050 ' |

| | | |
|---|---|---|
| TEST CONDUCTED: NASA, OFFICE OF ADVANCED RESEARCH AND TECHNOLOGY | | DATE 4-2-65 |
| TEST: INITIAL MEAS-DC PARAMETER CHARACTERISTICS | SAMPLE NUMBER NOTED | BAROM. PRESS. IN. HG |
| PART NAME & NUMBER: DTL NAND/NOR GATE - SE 102 K | TEST MEDIUM AIR | WET BULB TEMP 60°F |
| MANUFACTURER: C | TEST TEMP. 72° C. ☐ F. ☒ | DRY BULB TEMP. 72°F |
| ENGINEER | TECHNICIAN J Bloom | INSPECTOR |
| REF. SPEC. | | DATA SHEET NUMBER |

JOB NUMBER Ao-138-AE PAGE OF TEST REPORT NO. TR1-1188

6212
1/64

GENERAL PRECISION, INC
LIBRASCOPE GROUP

# ENVIRONMENTAL LABORATORY DATA SHEET

GROUP III - TEMP CYCLE STEP STRESS GROUP

PARAMETER: RESISTANCE MEASUREMENTS AT 1 MA

RESISTANCE - FULL SCALE = 100 K OHMS

| SAMPLE NUMBER | R1 | R2 | R3 |
|---|---|---|---|
| 46 | 0212 ' | 0194 ' | 2187 ' |
| 47 | 0193 ' | 0181 ' | 2078 ' |
| 48 | 0201 ' | 0190 ' | 2146 ' |
| 49 | 0200 ' | 0189 ' | 2138 ' |
| 50 | 0193 ' | 0181 ' | 2062 ' |
| 51 | 0201 ' | 0184 ' | 2116 ' |
| 52 | 0205 ' | 0192 ' | 2164 ' |
| 53 | 0210 ' | 0191 ' | 2175 ' |
| 54 | 0201 ' | 0186 ' | 2120 ' |
| 55 | 0203 ' | 0192 ' | 2163 ' |
| 56 | 0201 ' | 0188 ' | 2157 ' |
| 57 | 0198 ' | 0186 ' | 2131 ' |
| 58 | 0196 ' | 0183 ' | 2080 ' |
| 59 | 0195 ' | 0185 ' | 2031 ' |
| 60 | 0200 ' | 0183 ' | 2119 ' |
| 61 | 0201 ' | 0190 ' | 2119 ' |
| 62 | 0200 ' | 0185 ' | 2121 ' |
| 63 | 0195 ' | 0183 ' | 2110 ' |
| 64 | 0201 ' | 0189 ' | 2122 ' |
| 65 | 0201 ' | 0188 ' | 2123 ' |

CALIBRATION CHECK

VOLTAGE - FULL SCALE = 100 VOLTS

| CALIBRATION RESISTOR | | | |
|---|---|---|---|
| 2000 OHMS | 0200 ' | 0200 ' | 0201 ' |
| 1000 OHMS | 0100 ' | 0100 ' | 0102 ' |
| 500 OHMS' | 0051 ' | 0049 ' | 0049 ' |

| | | |
|---|---|---|
| TEST CONDUCTED FOR: NASA, OFFICE OF ADVANCED RESEARCH AND TECHNOLOGY | | DATE: 4-2-65 |
| TEST: INITIAL MEAS - DC. PARAMETER CHARACTERISTICS | SAMPLE NUMBER: NOTED | BAROM. PRESS. / IN. HG. |
| PART NAME & NUMBER: DTL NAND/NOR GATE - SE 102 K | TEST MEDIUM: AIR | WET BULB TEMP. 60°F |
| MANUFACTURER: C | TEST TEMP. 72° C. ☐ F. ☒ | DRY BULB TEMP. 72°F |
| ENGINEER | TECHNICIAN: [signature] | INSPECTOR |
| REF. SPEC. | | DATA SHEET NUMBER |

JOB NUMBER Ao-138-AE PAGE OF TEST REPORT NO. TR1-1188

GENERAL PRECISION, INC
LIBRASCOPE GROUP

# ENVIRONMENTAL LABORATORY DATA SHEET

## GROUP IV - TEMP STEP STRESS GROUP

PARAMETER: RESISTANCE MEASUREMENTS AT 1 MA

RESISTANCE - FULL SCALE = 100 ohms

| SAMPLE number | R1 | R2 | R3 |
|---|---|---|---|
| 66 | 0206 ' | 0195 ' | 2189 ' |
| 67 | 0203 ' | 0186 ' | 2138 ' |
| 68 | 0188 ' | 0185 ' | 2098 ' |
| 69 | 0195 ' | 0183 ' | 2114 ' |
| 70 | 0192 ' | 0182 ' | 1523 ' |
| 71 | 0212 ' | 0201 ' | 1759 ' |
| 72 | 0204 ' | 0192 ' | 2155 ' |
| 73 | 0210 ' | 0193 ' | 2153 ' |
| 74 | 0213 ' | 0199 ' | 2119 ' |
| 75 | 0202 ' | 0189 ' | 2135 ' |
| 76 | 0196 ' | 0186 ' | 2099 ' |
| 77 | 0200 ' | 0186 ' | 2128 ' |
| 78 | 0198 ' | 0186 ' | 2116 ' |
| 79 | 0212 ' | 0197 ' | 1856 ' |
| 80' | 0210 ' | 0195 ' | 2194 ' |

| | | |
|---|---|---|
| TEST CONDUCTED FOR: NASA OFFICE OF ADVANCED RESEARCH AND TECHNOLOGY | | DATE: 4-2-65 |
| TEST: INITIAL MEAS-DC PARAMETER CHARACTERISTICS | SAMPLE NUMBER: NOTED | BAROM PRESS: IN. HG |
| PART NAME & NUMBER: DTL NAND/NOR GATE - SE102K | TEST MEDIUM: AIR | WET BULB TEMP: 60°F |
| MANUFACTURER: C | TEST TEMP: 72°F | DRY BULB TEMP: 72°F |
| ENGINEER | TECHNICIAN: [illegible] | INSPECTOR |
| REF. SPEC. | | DATA SHEET NUMBER |

JOB NUMBER AO-138-AE PAGE OF TEST REPORT NO. TR1-1188

GENERAL PRECISION, INC
LIBRASCOPE GROUP

# ENVIRONMENTAL LABORATORY DATA SHEET

GROUP IV - TEMP STEP STRESS GROUP

PARAMETER: RESISTANCE MEASUREMENTS AT 1 MA

| SAMPLE NUMBER | RESISTANCE - FULL SCALE = 100 K OHMS R1 | R2 | R3 |
|---|---|---|---|
| 81 | 0199 ' | 0183 ' | 2094 ' |
| 82 | 0193 ' | 0184 ' | 2071 ' |
| 83 | 0196 ' | 0180 ' | 2100 ' |
| 84 | 0191 ' | 0180 ' | 1971 ' |
| 85 | 0199 ' | 0189 ' | 2121 ' |
| 86 | 0196 ' | 0182 ' | 2105 ' |
| 87 | 0196 ' | 0188 ' | 2098 ' |
| 88 | 0192 ' | 0181 ' | 2069 ' |
| 89 | 0194 ' | 0179 ' | 2067 ' |
| 90 | 0190 ' | 0180 ' | 2046 ' |
| 91 | 0202 ' | 0191 ' | 2153 ' |
| 92 | 0194 ' | 0182 ' | 2080 ' |
| 93 | 0199 ' | 0196 ' | 2198 ' |
| 94 | 0196 ' | 0185 ' | 2085 ' |
| 95 | 0198 ' | 0183 ' | 2114 ' |
| 96 | 0197 ' | 0186 ' | 2102 ' |
| 97 | 0200 ' | 0194 ' | 2164 ' |
| 98 | 0196 ' | 0185 ' | 2078 ' |
| 99 | 0209 ' | 0197 ' | 2224 ' |
| 100 | 0195 ' | 0185 ' | 2003 ' |

| | | |
|---|---|---|
| TEST CONDUCTED FOR: NASA, OFFICE OF ADVANCED RESEARCH AND TECHNOLOGY | | DATE: 4-2-65 |
| TEST: INITIAL MEAS-DC PARAMETER CHARACTERISTICS | SAMPLE NUMBER: NOTED | BAROM PRESS: IN HG |
| PART NAME & NUMBER: DTL NAND/NOR GATE - SE 102K | TEST MEDIUM: AIR | WET BULB TEMP: 60°F |
| MANUFACTURER: C | TEST TEMP: 72° C ☐ F ☒ | DRY BULB TEMP: 72°F |
| ENGINEER | TECHNICIAN: Kalom | INSPECTOR |
| REF SPEC | | DATA SHEET NUMBER |

JOB NUMBER Ao-138-AE PAGE OF TEST REPORT NO. TR 1-1188

GENERAL PRECISION, INC
LIBRASCOPE GROUP

# ENVIRONMENTAL LABORATORY DATA SHEET

GROUP IV - TEMP STEP STRESS GROUP

PARAMETER: RESISTANCE MEASUREMENTS AT 1 MA

| SAMPLE NUMBER | R1 | RESISTANCE - FULL SCALE = 10K OHMS R2 | R3 |
|---|---|---|---|
| 101 | 0197 ' | 0185 ' | 2107 ' |
| 102 | 0192 ' | 0181 ' | 2080 ' |
| 103 | 0198 ' | 0186 ' | 2105 ' |
| 104 | 0189 ' | 0180 ' | 2041 ' |
| 105 | 0199 ' | 0185 ' | 2108 ' |
| 106 | 0201 ' | 0189 ' | 2119 ' |
| 107 | 0197 ' | 0186 ' | 2105 ' |
| 108 | 0199 ' | 0185 ' | 2123 ' |
| 109 | 0212 ' | 0199 ' | 2122 ' |
| 110 | 0201 ' | 0186 ' | 2166 ' |
| 111 | 0197 ' | 0185 ' | 2119 ' |
| 112 | 0197 ' | 0183 ' | 2115 ' |
| 113 | 0196 ' | 0181 ' | 2081 ' |
| 114 | 0202 ' | 0190 ' | 2129 ' |
| 115 | 0194 ' | 0181 ' | 2074 ' |

CALIBRATION CHECK

| CALIBRATION RESISTOR | | VOLTAGE - FULL SCALE = 10 VOLTS | |
|---|---|---|---|
| 2000 OHMS | 0203 ' | 0201 ' | 0201 ' |
| 1000 OHMS | 0101 ' | 0101 ' | 0099 ' |
| 500 OHMS' | 0050 ' | 0052 ' | 0050 ' |

| | | | |
|---|---|---|---|
| TEST CONDUCTED FOR: NASA, OFFICE OF ADVANCED RESEARCH AND TECHNOLOGY | | DATE | 4-2-65 |
| TEST: INITIAL MEAS-DC PARAMETER CHARACTERISTICS | SAMPLE NUMBER: NOTED | BAROMETRIC PRESS | IN HG |
| PART NAME & NUMBER: DTL NAND/NOR GATE — SE102K | TEST MEDIUM: AIR | WET BULB TEMP | 60°F |
| MANUFACTURER: C | TEST TEMP: 72°F | DRY BULB TEMP | 72°F |
| ENGINEER | TECHNICIAN: R. Laskemi | | |
| REF SPEC | | DATA SHEET NUMBER | |

JOB NUMBER A0-138-AE PAGE OF TEST REPORT NO. TR 1-1188

GENERAL PRECISION, INC
LIBRASCOPE GROUP

GRO

# ENVIRONMENTAL LABORATORY DATA SHEET

GROUP I - INSTRUMENTATION CONTROL

CALIBRATION: CURRENT FULL SCALE = 10 MA
RESISTOR

| | | | |
|---|---|---|---|
| 2000 OHMS | 2000 ' | 1990 ' | 1981 ' |
| 1000 OHMS | 4020 ' | 4000 ' | 4000 ' |

PARAMETER: DIODE FORWARD CURRENT WITH V10 = 4 VOLTS

| SAMPLE NUMBER | CURRENT FULL SCALE = 10 MA If7 | If8 | If9 |
|---|---|---|---|
| 1 | 1784 ' | 1772 ' | 1699 ' |
| 2 | 1699 ' | 1700 ' | 1701 ' |
| 3 | 1769 ' | 1774 ' | 1790 ' |
| 4 | 1679 ' | 1681 ' | 1679 ' |
| 5' | 1689 ' | 1700 ' | 1679 ' |

| | | |
|---|---|---|
| TEST CONDUCTED: NASA, OFFICE OF ADVANCED RESEARCH AND TECHNOLOGY | | DATE 4-4-65 |
| TEST: INITIAL MEAS-DC. PARAMETER CHARACTERISTICS | SAMPLE NUMBER: NOTED | BAROM PRESS 30.21 IN HG |
| PART NAME & NUMBER: DTL NAND/NOR GATE - SE102K | TEST MEDIUM: AIR | WET BULB TEMP 59°F |
| MANUFACTURER: C | TEST TEMP 71°F C. F. | DRY BULB TEMP 71°F |
| ENGINEER: T.E. Nasemi | INSPECTOR | |
| REF SPEC | | DATA SHEET NUMBER |

JOB NUMBER AO-138-AE PAGE OF TEST REPORT NO. TR1-1188

GENERAL PRECISION, INC
LIBRASCOPE GROUP

# ENVIRONMENTAL LABORATORY DATA SHEET

GROUP II - LIFE TEST GROUP

PARAMETER: DIODE FORWARD CURRENT WITH V6 = 4 VOLTS

| SAMPLE NUMBER | If7 | CURRENT - FULL SCALE = 10 MA If8 | If9 |
|---|---|---|---|
| 6 | 1609 ' | 1599 ' | 1615 ' |
| 7 | 1759 ' | 1749 ' | 1758 ' |
| 8 | 1738 ' | 1742 ' | 1740 ' |
| 9 | 1660 ' | 1675 ' | 1662 ' |
| 10 | 1760 ' | 1759 ' | 1719 ' |
| 11 | 1689 ' | 1555 ' | 1689 ' |
| 12 | 1710 ' | 1742 ' | 1720 ' |
| 13 | 1703 ' | 1635 ' | 1700 ' |
| 14 | 1795 ' | 1789 ' | 1779 ' |
| 15 | 1732 ' | 1739 ' | 1720 ' |
| 16 | 1670 ' | 1720 ' | 1736 ' |
| 17 | 1710 ' | 1712 ' | 1699 ' |
| 18 | 1799 ' | 1810 ' | 1819 ' |
| 19 | 1727 ' | 1719 ' | 1710 ' |
| 20 | 1760 ' | 1752 ' | 1700 ' |
| 21 | 1660 ' | 1649 ' | 1646 ' |
| 22 | 1689 ' | 1699 ' | 1679 ' |
| 23 | 1740 ' | 1739 ' | 1726 ' |
| 24 | 1659 ' | 1642 ' | 1652 ' |
| 25' | 1699 ' | 1710 ' | 1665 ' |

| | | |
|---|---|---|
| TEST CONDUCTED FOR: NASA OFFICE OF ADVANCED RESEARCH AND TECHNOLOGY | | DATE 4-4-65 |
| TEST: INITIAL MEAS-DC PARAMETER CHARACTERISTICS | SAMPLE NUMBER NOTED | BAROM. PRESS 30.21 IN HG |
| PART NAME & NUMBER: DTL NAND/NOR GATE - SE102K | TEST MEDIUM AIR | WET BULB TEMP 59°F |
| MANUFACTURER: C | TEST TEMP. 71°F | DRY BULB TEMP. 71°F |
| ENGINEER | TECHNICIAN [illegible] | |
| REF. SPEC. | | DATA SHEET NUMBER |

JOB NUMBER AO-138-AE PAGE OF TEST REPORT NO. TR1-1188

GENERAL PRECISION, INC
LIBRASCOPE GROUP

# ENVIRONMENTAL LABORATORY DATA SHEET

GROUP II - LIFE TEST GROUP

PARAMETER: DIODE FORWARD CURRENT WITH V6 = 4 VOLTS

| SAMPLE NUMBER | If7 | CURRENT - FULL SCALE = 10 MA If8 | If9 |
|---|---|---|---|
| 26 | 1756 ' | 1761 ' | 1759 ' |
| 27 | 1758 ' | 1702 ' | 1770 ' |
| 28 | 1756 ' | 1725 ' | 1727 ' |
| 29 | 1726 ' | 1711 ' | 1724 ' |
| 30 | 1738 ' | 1752 ' | 1759 ' |
| 31 | 1640 ' | 1649 ' | 1652 ' |
| 32 | 1759 ' | 1762 ' | 1780 ' |
| 33 | 1780 ' | 1780 ' | 1749 ' |
| 34 | 1748 ' | 1751 ' | 1749 ' |
| 35 | 1749 ' | 1750 ' | 1719 ' |
| 36 | 1644 ' | 1639 ' | 1632 ' |
| 37 | 1769 ' | 1782 ' | 1783 ' |
| 38 | 1662 ' | 1622 ' | 1649 ' |
| 39 | 1701 ' | 1730 ' | 1619 ' |
| 40 | 1750 ' | 1720 ' | 1752 ' |
| 41 | 1775 ' | 1770 ' | 1769 ' |
| 42 | 1759 ' | 1742 ' | 1799 ' |
| 43 | 1752 ' | 1760 ' | 1759 ' |
| 44 | 1660 ' | 1652 ' | 1633 ' |
| 45 | 1760 ' | 1720 ' | 1709 ' |

CALIBRATION CHECK

| CALIBRATION RESISTOR | | CURRENT - FULL SCALE = 10 MA | |
|---|---|---|---|
| 2000 OHMS | 1969 ' | 1942 ' | 1982 ' |
| 1000 OHMS' | 4010 ' | 3999 ' | 4009 ' |

| | | |
|---|---|---|
| TEST CONDUCTED: NASA, OFFICE OF ADVANCED RESEARCH AND TECHNOLOGY | | DATE 4-4-65 |
| TEST: INITIAL MEAS-DC PARAMETER CHARACTERISTICS | SAMPLE NUMBER: NOTED | BAROM PRESS 30.21 IN HG |
| PART NAME & NUMBER: DTL NAND/NOR GATE - SE 102K | TEST MEDIUM: AIR | WET BULB TEMP 59°F |
| MANUFACTURER: C | TEST TEMP 71°F | DRY BULB TEMP 71°F |
| ENGINEER: [illegible] | INSPECTOR | |
| REF SPEC | DATA SHEET NUMBER | |

JOB NUMBER Ao-138-AE PAGE OF TEST REPORT NO. TR1-1188

GENERAL PRECISION, INC
LIGHASCOPE GROUP

# ENVIRONMENTAL LABORATORY DATA SHEET

GROUP III - TEMP CYCLE STEP STRESS GROUP

PARAMETER: DIODE FORWARD CURRENT WITH V6 = 4 VOLTS

| SAMPLE NUMBER | If7 | CURRENT - FULL SCALE = 10 MA If8 | If9 |
|---|---|---|---|
| 46 | 1646 ' | 1644 ' | 1670 ' |
| 47 | 1780 ' | 1779 ' | 1700 ' |
| 48 | 1718 ' | 1699 ' | 1699 ' |
| 49 | 1747 ' | 1729 ' | 1759 ' |
| 50 | 1790 ' | 1770 ' | 1800 ' |
| 51 | 1711 ' | 1741 ' | 1740 ' |
| 52 | 1619 ' | 1619 ' | 1680 ' |
| 53 | 1699 ' | 1689 ' | 1699 ' |
| 54 | 1720 ' | 1722 ' | 1716 ' |
| 55 | 1680 ' | 1683 ' | 1696 ' |
| 56 | 1707 ' | 1800 ' | 1701 ' |
| 57 | 1800 ' | 1749 ' | 1719 ' |
| 58 | 1760 ' | 1749 ' | 1740 ' |
| 59 | 1790 ' | 1770 ' | 1780 ' |
| 60 | 1730 ' | 1740 ' | 1630 ' |
| 61 | 1685 ' | 1719 ' | 1693 ' |
| 62 | 1729 ' | 1740 ' | 1756 ' |
| 63 | 1760 ' | 1779 ' | 1750 ' |
| 64 | 1712 ' | 1695 ' | 1678 ' |
| 65 | 1730 ' | 1629 ' | 1702.' |

CALIBRATION CHECK

| CALIBRATION RESISTOR | | CURRENT - FULL SCALE = 10 MA | |
|---|---|---|---|
| 2000 OHMS | 1989 ' | 1982 ' | 1964 ' |
| 1000 OHMS' | 4010 ' | 3989 ' | 4019 ' |

| | | |
|---|---|---|
| TEST CONDUCTED NASA, OFFICE OF ADVANCED RESEARCH AND TECHNOLOGY | | DATE 4-4-65 |
| TEST INITIAL MEAS-DC PARAMETER CHARACTERISTICS | SAMPLE NUMBER NOTED | BAROM. PRESS 30.21 IN. HG |
| PART NAME & NUMBER DTL NAND/NOR GATE - SE 102K | TEST MEDIUM AIR | HUMIDITY 59 °F |
| MANUFACTURER C | TEST TEMP. 71 °F | DRY BULB TEMP 71 °F |
| ENGINEER | INSPECTOR | |
| REF SPEC | DATA SHEET | |

JOB NUMBER AD-138-AE PAGE OF TEST REPORT NO. TR1-1188

GENERAL PRECISION, INC
LIBRASCOPE GROUP

# ENVIRONMENTAL LABORATORY DATA SHEET

GROUP IV - TEMP STEP STRESS GROUP

PARAMETER: DIODE FORWARD CURRENT WITH V6 = 4 VOLTS

| SAMPLE NUMBER | If7 | CURRENT - FULL SCALE = 10 MA If8 | If9 |
|---|---|---|---|
| 66 | 1660 ' | 1660 ' | 1658 ' |
| 67 | 1739 ' | 1716 ' | 1800 ' |
| 68 | 1789 ' | 1750 ' | 1661 ' |
| 69 | 1762 ' | 1766 ' | 1790 ' |
| 70 | 1779 ' | 1739 ' | 1775 ' |
| 71 | 1599 ' | 1599 ' | 1525 ' |
| 72 | 1699 ' | 1620 ' | 1599 ' |
| 73 | 1683 ' | 1689 ' | 1600 ' |
| 74 | 1620 ' | 1629 ' | 1600 ' |
| 75 | 1690 ' | 1690 ' | 1689 ' |
| 76. | 1763 ' | 1782 ' | 1746 ' |
| 77 | 1759 ' | 1756 ' | 1752 ' |
| 78 | 1723 ' | 1720 ' | 1719 ' |
| 79 | 1632 ' | 1620 ' | 1620 ' |
| 80' | 1670 ' | 1599 ' | 1600 ' |

| | | |
|---|---|---|
| TEST CONDUCTED: NASA, OFFICE OF ADVANCED RESEARCH AND TECHNOLOGY | | DATE: 4-4-65 |
| TEST: INITIAL MEAS-DC. PARAMETER CHARACTERISTICS | SAMPLE NUMBER: NOTED | BAROM. PRESS: 30.21 IN. HG. |
| PART NAME & NUMBER: DTL NAND/NOR GATE - SE 102K | TEST MEDIUM: AIR | WET BULB TEMP: 59°F |
| MANUFACTURER: C | TEST TEMP.: 71°F | DRY BULB TEMP: 71°F |
| ENGINEER: | TEST ENGINEER: F E Hawkins | INSPECTOR: |
| REF. SPEC.: | | DATA SHEET: |

JOB NUMBER Ao-138-AE PAGE OF TEST REPORT NO. TR1-1188

DS-2
1/64

GENERAL PRECISION, INC
LIBRASCOPE GROUP

# ENVIRONMENTAL LABORATORY DATA SHEET

GROUP IV- TEMP STEP STRESS GROUP

PARAMETER: DIODE FORWARD CURRENT WITH V6 = 4 VOLTS

| SAMPLE NUMBER | If7 | CURRENT - FULL SCALE = 10 MA If8 | If9 | |
|---|---|---|---|---|
| 81 | 1759 ' | 1706 ' | 1734 ' | |
| 82 | 1800 ' | 1775 ' | 1800 ' | |
| 83 | 1775 ' | 1792 ' | 1771 ' | |
| 84 | 1800 ' | 1799 ' | 1779 ' | |
| 85 | 1719 ' | 1730 ' | 1800 ' | |
| 86 | 1761 ' | 1699 ' | 0500 ' | |
| 87 | 1742 ' | 1733 ' | 1700 ' | |
| 88 | 1789 ' | 1770 ' | ~~0029~~-1 | 2000 ' |
| 89 | 1799 ' | 1799 ' | 1795 ' | |
| 90 | 1782 ' | 1776 ' | 1785 ' | |
| 91 | 1692 ' | 1682 ' | 1667 ' | |
| 92 | 1770 ' | 1769 ' | 1766 ' | |
| 93 | 1601 ' | 1670 ' | 1660 ' | |
| 94 | 1769 ' | 1762 ' | 1759 ' | |
| 95 | 1760 ' | 1766 ' | 1737 ' | |
| 96 | 1786 ' | 1779 ' | 1749 ' | |
| 97 | 1679 ' | 1688 ' | 1676 ' | |
| 98 | 1745 ' | 1749 ' | 1762 ' | |
| 99 | 1632 ' | 1640 ' | 1623 ' | |
| 100' | 1740 ' | 1742 ' | 1736 ' | |

| | | | |
|---|---|---|---|
| TEST CONDUCTED FOR: NASA, OFFICE OF ADVANCED RESEARCH AND TECHNOLOGY | | | DATE 4-4-65 |
| TEST: INITIAL MEAS.-DC PARAMETER CHARACTERISTICS | SAMPLE NUMBER NOTED | | BAROM PRESS 30.21 IN HG |
| PART NAME & NO.: DTL NAND/NOR GATE - SE 102K | TEST MEDIUM AIR | | WET BULB TEMP 59°F |
| MANUFACTURER: C | TEST TEMP. 71°F | | DRY BULB TEMP 71°F |
| ENGINEER: | | INSPECTOR: | |
| REF. SPEC. | | DATA SHEET NUMBER | |

JOB NUMBER AO-138-AE PAGE OF TEST REPORT NO. TR1-1188

GENERAL PRECISION, INC
LIBRASCOPE GROUP

# ENVIRONMENTAL LABORATORY DATA SHEET

GROUP IV - TEMP STEP STRESS GROUP

PARAMETER: DIODE FORWARD CURRENT WITH V6 = 4 VOLTS

| SAMPLE NUMBER | If7 | CURRENT - FULL SCALE = 10 MA IF8 | If9 |
|---|---|---|---|
| 101 | 1759 ' | 1735 ' | 1762 ' |
| 102 | 1814 ' | 1787 ' | 1789 ' |
| 103 | 1749 ' | 1360 ' | 1772 ' |
| 104 | 1900 ' | 1782 ' | 1799 ' |
| 105 | 1780 ' | 1759 ' | 1748 ' |
| 106 | 1719 ' | 1722 ' | 1730 ' |
| 107 | 1764 ' | 1800 ' | 1766 ' |
| 108 | 1732 ' | 1210 ' | 1820 ' |
| 109 | 1609 ' | 0001 ' | 1619 ' |
| 110 | 1701 ' | 1722 ' | 1709 ' |
| 111 | 1740 ' | 1746 ' | 1759 ' |
| 112 | 1748 ' | 1742 ' | 1756 ' |
| 113 | 1779 ' | 1769 ' | 1771 ' |
| 114 | 1700 ' | 1699 ' | 1694 ' |
| 115 | 1780 ' | 1775 ' | 1740 ' |

CALIBRATION CHECK

| CALIBRATION RESISTOR | | CURRENT - FULL SCALE = 10 MA | |
|---|---|---|---|
| 2000 OHMS | 2000 ' | 1976 ' | 1999 ' |
| 1000 OHMS' | 4100 ' | 4020 ' | 4002 ' |

| | | |
|---|---|---|
| TEST CONDUCTED FOR NASA, OFFICE OF ADVANCED RESEARCH & TECHNOLOGY | | DATE 4-4-65 |
| TEST INITIAL MEAS.- D.C. PARAMETER CHARACTERISTICS | SAMPLE NUMBER NOTED | BAROM PRESS 30.21 IN. HG |
| PART NAME & NUMBER DTL NAND/NOR GATE - SE 102K | TEST MEDIUM AIR | WET BULB TEMP 59°F |
| MANUFACTURER C | TEST TEMP 71°F C. F. | DRY BULB TEMP 71°F |
| ENGINEER | INSPECTOR | |
| REF. SPEC | DATA SHEET NUMBER | |

JOB NUMBER A0-138-AE PAGE OF TEST REPORT NO. TR1-1188

GENERAL PRECISION INC
LIBRASCOPE GROUP

# ENVIRONMENTAL LABORATORY DATA SHEET

GROUP I - INSTRUMENTATION CONTROL

PARAMETER: OUTPUT SATURATION VOLTAGE AT Ic = 10 MA - Ib = 1 MA

CALIBRATION CHECK AT Ic = 10MA - Ib = 1 MA

| CALIBRATION RESISTOR | VOLTAGE - FULL SCALE = 10 VOLTS | | | |
|---|---|---|---|---|
| 500 OHMS | 0498 ' | 0496 ' | 0495 ' | 0495 ' |
| 50 OHMS | 0497 ' | 0495 ' | 0496 ' | 0497 ' |

| SAMPLE NUMBER | VOLTAGE - FULL SCALE = 10 VOLTS V3 |
|---|---|
| 1 | 0229 ' |
| 2 | 0234 ' |
| 3 | 0223 ' |
| 4 | 0238 ' |
| 5' | 0224 ' |

| | | |
|---|---|---|
| TEST CONDUCTED FOR: NASA, OFFICE OF ADVANCED RESEARCH AND TECHNOLOGY | | DATE: 4-5-65 |
| TEST: INITIAL MEAS-DC PARAMETER CHARACTERISTICS | SAMPLE NUMBER: NOTED | DRAWING NO. REV. / PHOTO: 30, 21 |
| TEST NAME & NUMBER: DTL NAND/NOR GATE-SE102K | TEST MEDIUM: AIR | TEST SOLD TEMP: 59°F |
| MANUFACTURER: C | TEST TEMP: 71°F | SOLD TEMP: 71°F |
| ENGINEER | TECHNICIAN | INSPECTOR |
| REF SPEC | | DATA SHEET NUMBER |

JOB NUMBER A0-138-AE PAGE OF TEST REPORT NO. TR1-1188

GENERAL PRECISION, INC
LIBRASCOPE GROUP

# ENVIRONMENTAL LABORATORY DATA SHEET

GROUP II- LIFE TEST GROUP

PARAMETER: OUTPUT SATURATION VOLTAGE AT Ic= 10 MA Ib = 1 MA

VOLTAGE - FULL SCALE = 10 VOLTS

| SAMPLE NUMBER | V3 |
|---|---|
| 6 | 0227 ' |
| 7 | 0236 ' |
| 8 | 0231 ' |
| 9 | 0251 ' |
| 10 | 0246 ' |
| 11 | 0229 ' |
| 12 | 0245 ' |
| 13 | 0228 ' |
| 14 | 0222 ' |
| 15 | 0239 ' |
| 16 | 0241 ' |
| 17 | 0225 ' |
| 18 | 0232 ' |
| 19 | 0228 ' |
| 20 | 0231 ' |
| 21 | 0261 ' |
| 22 | 0232 ' |
| 23 | 0238 ' |
| 24 | 0242 ' |
| 25' | 0246 ' |

| | | |
|---|---|---|
| TEST CONDUCTED FOR: NASA OFFICE OF ADVANCED RESEARCH AND TECHNOLOGY | | DATE 4-5-65 |
| TEST: INITIAL MEAS-DC PARAMETER CHARACTERISTICS | SAMPLE NUMBER NOTED | BAROM PRESS 30.21 IN. HG |
| PART NAME & NUMBER: DTL NAND/NOR GATE - SE102K | TEST MEDIUM AIR | WET BULB TEMP 59°F |
| MANUFACTURER: C | TEST TEMP 71° C ☐ F ☒ | DRY BULB TEMP 71°F |
| ENGINEER | TECHNICIAN | INSPECTOR |
| REF. SPEC | | DATA SHEET NUMBER |

JOB NUMBER A0-138-AE PAGE OF TEST REPORT NO. TR1-1188

GENERAL PRECISION, INC
LIBRASCOPE GROUP

# ENVIRONMENTAL LABORATORY DATA SHEET

GROUP II- LIFE TEST GROUP

PARAMETER: OUTPUT SATURATION VOLTAGE AT Ic= 10 MA Ib = 1 MA

VOLTAGE - FULL SCALE = 10 VOLTS

| SAMPLE NUMBER | V3 |
|---|---|
| 26 | 0234 ' |
| 27 | 0248 ' |
| 28 | 0231 ' |
| 29 | 0231 ' |
| 30 | 0229 ' |
| 31 | 0231 ' |
| 32 | 0246 ' |
| 33 | 0229 ' |
| 34 | 0243 ' |
| 35 | 0231 ' |
| 36 | 0235 ' |
| 37 | 0232 ' |
| 38 | 0229 ' |
| 39 | 0229 ' |
| 40 | 0241 ' |
| 41 | 0239 ' |
| 42 | 0235 ' |
| 43 | 0227 ' |
| 44 | 0233 ' |
| 45 | 0300 ' |

CALIBRATION CHECK AT Ic = 10MA - Ib = 1 MA

VOLTAGE - FULL SCALE = 10 VOLTS

| CALIBRATION RESISTOR | | | | |
|---|---|---|---|---|
| 500 OHMS | 0496 ' | 0495 ' | 0495 ' | |
| 50 OHMS' | 0499 ' | 0498 ' | 0495 ' | 0498 ' |

| | | |
|---|---|---|
| TEST CONDUCTED FOR: NASA, OFFICE OF ADVANCED RESEARCH AND TECHNOLOGY | | DATE 4-5-65 |
| TEST: INITIAL MEAS-DC PARAMETER CHARACTERISTICS | SAMPLE NUMBER NOTED | BAROM PRESS 30.21 IN. HG |
| PART NAME & NUMBER: DTL NAND/NOR GATE - SE102K | TEST MEDIUM AIR | WET BULB TEMP 59°F |
| MANUFACTURER: C | TEST TEMP. 71° C. ☐ F. ☑ | DRY BULB TEMP. 71°F |
| ENGINEER | TECHNICIAN | INSPECTOR |
| REF SPEC. | | DATA SHEET NUMBER |

JOB NUMBER A0-138-AE PAGE OF TEST REPORT NO. TR1-1188

GENERAL PRECISION INC
LIBRASCOPE GROUP

# ENVIRONMENTAL LABORATORY DATA SHEET

GROUP III- TEMP CYCLE STEP STRESS GROUP

PARAMETER: OUTPUT SATURATION VOLTAGE AT Ic= 10 MA Ib = 1 MA

VOLTAGE - FULL SCALE = 10 VOLTS

| SAMPLE NUMBER | V3 |
|---|---|
| 46 | 0236 ' |
| 47 | 0247 ' |
| 48 | 0236 ' |
| 49 | 0241 ' |
| 50 | 0256 ' |
| 51 | 0242 ' |
| 52 | 0255 ' |
| 53 | 0246 ' |
| 54 | 0245 ' |
| 55 | 0300 ' |
| 56 | 0237 ' |
| 57 | 0237 ' |
| 58 | 0225 ' |
| 59 | 0237 ' |
| 60 | 0235 ' |
| 61 | 0239 ' |
| 62 | 0230 ' |
| 63 | 0234 ' |
| 64 | 0233 ' |
| 65 | 0248 ' |

CALIBRATION CHECK AT Ic = 10MA - Ib = 1 MA

VOLTAGE - FULL SCALE = 10 VOLTS

| CALIBRATION RESISTOR | | | |
|---|---|---|---|
| 500 OHMS | 0496 ' | 0499 ' | 0495 ' |
| 50 OHMS' | 0496 ' | 0497 ' | 0497 ' |

| | | |
|---|---|---|
| TEST CONDUCTED FOR: NASA OFFICE OF ADVANCED RESEARCH AND TECHNOLOGY | | DATE 4-5-65 |
| TEST: INITIAL MEAS-DC PARAMETER CHARACTERISTICS | SAMPLE NUMBER NOTED | BAROM PRESS 30.21 IN. HG. |
| PART NAME & NUMBER: DTL NAND/NOR GATE - SE102K | TEST MEDIUM AIR | WET BULB TEMP 59°F |
| MANUFACTURER: C | TEST TEMP. 71° C. ☐ F. ☒ | DRY BULB TEMP. 71°F |
| ENGINEER | TECHNICIAN | INSPECTOR |
| REF. SPEC. | | DATA SHEET NUMBER |

JOB NUMBER AO-138-AE PAGE OF TEST REPORT NO. TR1-1185

GENERAL PRECISION, INC
LIBRASCOPE GROUP

# ENVIRONMENTAL LABORATORY DATA SHEET

GROUP IV - TEMP STEP STRESS GROUP

PARAMETER: OUTPUT SATURATION VOLTAGE AT Ic= 10 MA Ib = 1 MA

VOLTAGE - FULL SCALE = 10 VOLTS

| SAMPLE NUMBER | V3 |
|---|---|
| 66 | 0256 ' |
| 67 | 0238 ' |
| 68 | 0262 ' |
| 69 | 0232 ' |
| 70 | 0238 ' |
| 71 | 0233 ' |
| 72 | 0231 ' |
| 73 | 0222 ' |
| 74 | 0233 ' |
| 75 | 0231 ' |
| 76 | 0229 ' |
| 77 | 0236 ' |
| 78 | 0238 ' |
| 79 | 0225 ' |
| 80' | 0241 ' |

| | | |
|---|---|---|
| TEST CONDUCTED FOR: NASA OFFICE OF ADVANCED RESEARCH AND TECHNOLOGY | | DATE: 4-5-65 |
| TEST: INITIAL MEAS-DC PARAMETER CHARACTERISTICS | SAMPLE NUMBER: NOTED | BAROM PRESS. 30.21 IN HG |
| PART NAME & NUMBER: DTL NAND/NOR GATE - SE102K | TEST MEDIUM: AIR | WET BULB TEMP. 59°F |
| MANUFACTURER: C | TEST TEMP. 71° C. ☐ F. ☒ | DRY BULB TEMP. 71°F |
| ENGINEER | TECHNICIAN | INSPECTOR |
| REF. SPEC. | | DATA SHEET NUMBER |

JOB NUMBER AO-138-AE PAGE OF TEST REPORT NO. TR1-1188

601-2
1/64

GENERAL PRECISION, INC
LIBRASCOPE GROUP

# ENVIRONMENTAL LABORATORY DATA SHEET

GROUP IV - TEMP STEP STRESS GROUP

PARAMETER: OUTPUT SATURATION VOLTAGE AT Ic= 10 MA Ib = 1 MA

VOLTAGE - FULL SCALE = 10 VOLTS

| SAMPLE NUMBER | V3 |
|---|---|
| 81 | 0240 ' |
| 82 | 0225 ' |
| 83 | 0241 ' |
| 84 | 0236 ' |
| 85 | 0240 ' |
| 86 | 0235 ' |
| 87 | 0241 ' |
| 88 | 0233 ' |
| 89 | 0229 ' |
| 90 | 0241 ' |
| 91 | 0229 ' |
| 92 | 0235 ' |
| 93 | 0251 ' |
| 94 | 0228 ' |
| 95 | 0235 ' |
| 96 | 0242 ' |
| 97 | 0248 ' |
| 98 | 0235 ' |
| 99 | 0250 ' |
| 100' | 0237 ' |

| | | |
|---|---|---|
| TEST CONDUCTED FOR: NASA OFFICE OF ADVANCED RESEARCH AND TECHNOLOGY | | DATE: 4-5-65 |
| TEST: INITIAL MEAS-DC PARAMETER CHARACTERISTICS | SAMPLE NUMBER: NOTED | BAROM. PRESS. (IN. HG.): 30.21 |
| PART NAME & NUMBER: DTL NAND/NOR GATE-SE102K | TEST MEDIUM: AIR | WET BULB TEMP.: 68°F |
| MANUFACTURER: C | TEST TEMP.: 72° C. ☐ F. ☑ | DRY BULB TEMP.: 72°F |
| ENGINEER | TECHNICIAN | INSPECTOR |
| REF. SPEC. | | DATA SHEET NUMBER |

JOB NUMBER AO-138-AE PAGE OF TEST REPORT NO. TR1-1188

6111 2
1/64

GENERAL PRECISION, INC
LIBRASCOPE GROUP

# ENVIRONMENTAL LABORATORY DATA SHEET

GROUP IV - TEMP STEP STRESS GROUP

PARAMETER: OUTPUT SATURATION VOLTAGE AT Ic= 10 MA Ib = 1 MA

VOLTAGE - FULL SCALE = 10 VOLTS

| SAMPLE NUMBER | V3 |
|---|---|
| 101 | 0232 ' |
| 102 | 0233 ' |
| 103 | 0233 ' |
| 104 | 0242 ' |
| 105 | 0226 ' |
| 106 | 0223 ' |
| 107 | 0231 ' |
| 108 | 0233 ' |
| 109 | 0226 ' |
| 110 | 0251 ' |
| 111 | 0229 ' |
| 112 | 0246 ' |
| 113 | 0238 ' |
| 114 | 0228 ' |
| 115 | 0232 ' |

CALIBRATION CHECK AT Ic = 10MA - Ib = 1 MA

VOLTAGE - FULL SCALE = 10 VOLTS

| CALIBRATION RESISTOR | | | |
|---|---|---|---|
| 500 OHMS | 0496 ' | 0496 ' | 0496 ' |
| 50 OHMS' | 0499 ' | 0495 ' | 0497 ' |

| | | |
|---|---|---|
| TEST CONDUCTED FOR: NASA OFFICE OF ADVANCED RESEARCH AND TECHNOLOGY | | DATE: 4-5-65 |
| TEST: INITIAL MEAS.-DC PARAMETER CHARACTERISTICS | SAMPLE NUMBER: NOTED | BAROM PRESS: 30.21 IN. HG. |
| PART NAME & NUMBER: DTL NAND/NOR GATE - SE102K | TEST MEDIUM: AIR | WET BULB TEMP: 68 °F |
| MANUFACTURER: C | TEST TEMP: 72° C. ☐ F. ☒ | DRY BULB TEMP: 72 °F |
| ENGINEER | TECHNICIAN | INSPECTOR |
| REF. SPEC. | | DATA SHEET NUMBER |

JOB NUMBER A0-138-AF PAGE OF TEST REPORT NO. TR1-1188

ACL 2
1/64

GENERAL PRECISION, INC.
LIBRASCOPE GROUP

# ENVIRONMENTAL LABORATORY DATA SHEET

TEST CONDITIONS:
IF RETEST CHECK ☐

| SAMPLE NUMBER | IB μA | | | | | | | |
|---|---|---|---|---|---|---|---|---|
| 1 | 22.7 | | | | | | | |
| 2 | 17.58 | | | | | | | |
| 3 | 22.75 | | | | | | | |
| 4 | 27.31 | | | | | | | |
| 5 | 20.90 | | | | | | | |

| | | | |
|---|---|---|---|
| TEST CONDUCTED FOR: NASA OFFICE OF ADVANCED RESEARCH AND DEVELOPMENT | | | DATE 4-6-65 |
| TEST: INITIAL MEAS-DC PARAMETER CHARACTERISTICS | SAMPLE NUMBER: NOTED | | BAROM. PRESS. IN. HG. |
| PART NAME & NUMBER: DTL NAND/NOR GATE - SE102K | TEST MEDIUM: AIR | | WET BULB TEMP. 60°F |
| MANUFACTURER: C | TEST TEMP. 74° | C. ☐ F. ☒ | DRY BULB TEMP. 74°F |
| ENGINEER | TECHNICIAN: R. D. Witzner | INSPECTOR | |
| REF. SPEC. | | DATA SHEET NUMBER | |

JOB NUMBER A0-138-AE PAGE OF TEST REPORT NO. TR1-1188

601-2
1/64

GENERAL PRECISION, INC.
LIBRASCOPE GROUP

# ENVIRONMENTAL LABORATORY DATA SHEET

TEST CONDITIONS:
IF RETEST CHECK ☐

| SAMPLE NUMBER | $I_B$ μA | | SAMPLE NUMBER | $I_B$ μA | | SAMPLE NUMBER | $I_B$ μA | |
|---|---|---|---|---|---|---|---|---|
| 6 | 17.88 | | 26 | 25.04 | | 46 | 16.93 | |
| 7 | 25.14 | | 27 | 19.41 | | 47 | 21.02 | |
| 8 | 15.66 | | 28 | 16.86 | | 48 | 22.24 | |
| 9 | 21.20 | | 29 | 25.22 | | 49 | 24.99 | |
| 10 | 21.18 | | 30 | 17.57 | | 50 | 21.84 | |
| 11 | 23.02 | | 31 | 22.60 | | 51 | 27.46 | |
| 12 | 24.67 | | 32 | 22.29 | | 52 | 23.97 | |
| 13 | 15.88 | | 33 | 29.48 | | 53 | 20.30 | |
| 14 | 17.06 | | 34 | 16.37 | | 54 | 21.49 | |
| 15 | 26.27 | | 35 | 19.14 | | 55 | 16.70 | |
| 16 | 26.52 | | 36 | 24.95 | | 56 | 17.03 | |
| 17 | 16.93 | | 37 | 18.61 | | 57 | 23.69 | |
| 18 | 18.64 | | 38 | 21.79 | | 58 | 21.60 | |
| 19 | 16.14 | | 39 | 18.88 | | 59 | 28.64 | |
| 20 | 23.09 | | 40 | 25.46 | | 60 | 17.21 | |
| 21 | 21.36 | | 41 | 16.54 | | 61 | 19.90 | |
| 22 | 25.50 | | 42 | 22.75 | | 62 | 16.59 | |
| 23 | 16.53 | | 43 | 21.42 | | 63 | 24.12 | |
| 24 | 27.57 | | 44 | 17.90 | | 64 | 16.52 | |
| 25 | 27.49 | | 45 | 17.00 | | 65 | 20.21 | |

| | | |
|---|---|---|
| TEST CONDUCTED FOR: NASA OFFICE OF ADVANCED RESEARCH AND TECHNOLOGY | | DATE: 4-7-65 |
| TEST: INITIAL MEAS - DC PARAMENT CHARACTERISTICS | SAMPLE NUMBER: NOTED | BAROM. PRESS. IN. HG. |
| PART NAME & NUMBER: DTL NAND/NOR GATE - SE 102K | TEST MEDIUM: AIR | WET BULB TEMP. 60°F |
| MANUFACTURER: C | TEST TEMP. 74° C. ☐ F. ☒ | DRY BULB TEMP. 74°F |
| ENGINEER | TECHNICIAN: N. D. Wistrand | INSPECTOR |
| REF. SPEC. | | DATA SHEET NUMBER |

JOB NUMBER Ao-138-AE PAGE OF TEST REPORT NO. TR1-1188

601-2
1/64

GENERAL PRECISION, INC.
LIBRASCOPE GROUP

# ENVIRONMENTAL LABORATORY DATA SHEET

C. CURRENT
$V_{CE} = 0.5V$
$I_C = 1.0 mA$

TEST CONDITIONS:
IF RETEST CHECK ☐

| SAMPLE NUMBER | $I_B$ uA |
|---|---|
| 1 | 22.58 |
| 2 | 17.65 |
| 3 | 22.63 |
| 4 | 27.28 |
| 5 | 20.91 |

| | | |
|---|---|---|
| TEST CONDUCTED FOR: NASA OFFICE OF ADVANCED RESEARCH AND TECHNOLOGY | | DATE: 4-7-65 |
| TEST: INITIAL MEAS.-DC PARAMETER CHARACTERISTICS | SAMPLE NUMBER: NOTED | BAROM PRESS. IN. HG. |
| PART NAME & NUMBER: DTL NAND/NOR GATE-SE 102K | TEST MEDIUM: AIR | WET BULB TEMP.: 60°F |
| MANUFACTURER: C | TEST TEMP.: 74° C. ☐ F. ☒ | DRY BULB TEMP.: 74°F |
| ENGINEER | TECHNICIAN: N. D. Witmer | INSPECTOR |
| REF. SPEC. | | DATA SHEET NUMBER |

JOB NUMBER Ao-138-AE PAGE OF TEST REPORT NO. TR1-1188

601-2
1/64

GENERAL PRECISION, INC.
LIBRASCOPE GROUP

# ENVIRONMENTAL LABORATORY DATA SHEET

DC CURRENT GAIN
$V_{CE}=0.5V$ $I_C=1MA$

TEST CONDITIONS:
IF RETEST CHECK ☐

| SAMPLE NUMBER | $I_B$ μA | | SAMPLE NUMBER | $I_B$ μA | | SAMPLE NUMBER | $I_B$ μA | |
|---|---|---|---|---|---|---|---|---|
| 66 | 26.40 | | 86 | 26.45 | | 106 | 17.51 | |
| 67 | 16.44 | | 87 | 20.28 | | 107 | 18.56 | |
| 68 | 23.29 | | 88 | 20.40 | | 108 | 17.69 | |
| 69 | 24.68 | | 89 | 17.40 | | 109 | 17.96 | |
| 70 | 19.02 | | 90 | 21.70 | | 110 | 23.24 | |
| 71 | 21.29 | | 91 | 16.14 | | 111 | 23.28 | |
| 72 | 23.58 | | 92 | 25.05 | | 112 | 21.31 | |
| 73 | 19.18 | | 93 | 25.06 | | 113 | 26.69 | |
| 74 | 19.58 | | 94 | 17.51 | | 114 | 17.67 | |
| 75 | 17.87 | | 95 | 24.87 | | 115 | 18.01 | |
| 76 | 24.70 | | 96 | 27.92 | | | | |
| 77 | 17.09 | | 97 | 20.50 | | | | |
| 78 | 19.21 | | 98 | 25.10 | | | | |
| 79 | 16.28 | | 99 | 23.76 | | | | |
| 80 | 16.48 | | 100 | 23.86 | | | | |
| 81 | 19.82 | | 101 | 22.40 | | | | |
| 82 | 21.58 | | 102 | 24.09 | | | | |
| 83 | 29.25 | | 103 | 18.00 | | | | |
| 84 | 18.41 | | 104 | 23.44 | | | | |
| 85 | 16.69 | | 105 | 18.97 | | | | |

| | | |
|---|---|---|
| TEST CONDUCTED FOR: NASA, OFFICE OF ADVANCED RESEARCH AND TECHNOLOGY | | DATE: 4-7-65 |
| TEST: INITIAL MEAS-DC PARAMETER CHARACTERISTICS | SAMPLE NUMBER: NOTED | BAROM. PRESS. IN. HG. |
| PART NAME & NUMBER: DTL NAND/NOR GATE - SE102K | TEST MEDIUM: AIR | WET BULB TEMP.: 60°F |
| MANUFACTURER: C | TEST TEMP.: 74° C. ☐ F. ☒ | DRY BULB TEMP.: 74°F |
| ENGINEER | TECHNICIAN: N.D. Wistanley | INSPECTOR |
| REF. SPEC. | | DATA SHEET NUMBER |

JOB NUMBER AO-138-AE PAGE OF TEST REPORT NO. TR1-1188

601-2
1/64

GENERAL PRECISION, INC.
LIBRASCOPE GROUP

# ENVIRONMENTAL LABORATORY DATA SHEET

## GROUP I - INSTRUMENTATION CONTROL

CALIBRATION CHECK - BREAKDOWN VOLTAGE AT 1UA

| CALIBRATION RESISTOR | VOLTAGE - FULL SCALE = 100 VOLTS | | |
|---|---|---|---|
| 20 MEG | 2004 ' | 2003 ' | 2004 ' |
| 10 MEG | 0998 ' | 0999 ' | 0999 ' |
| 5 MEG | 0497 ' | 0497 ' | 0497 ' |

| SAMPLE NUMBER | VOLTAGE - FULL SCALE = 100 VOLTS | | | |
|---|---|---|---|---|
| | BV7 | BV8 | BV9 | BVCBO |
| 1 | 1826 ' | 1722 ' | 1800 ' | 1807 ' |
| 2 | 1914 ' | 1909 ' | 1916 ' | 1885 ' |
| 3 | 1848 ' | 1367 ' | 1835 ' | 1821 ' |
| 4 | 1785 ' | 1800 ' | 1800 ' | 1794 ' |
| 5' | 1818 ' | 1828 ' | 1824 ' | 1812 ' |

| | | |
|---|---|---|
| TEST CONDUCTED FOR: NASA, OFFICE OF ADVANCED RESEARCH AND TECHNOLOGY | | DATE: 4-15-65 |
| TEST: POST - 240 HR. MEAS. | SAMPLE NUMBER: NOTED | BAROM. PRESS. IN. HG.: 30.13 |
| PART NAME & NUMBER: DTL NAND/NOR GATE - SE 102 K | TEST MEDIUM: AIR | WET BULB TEMP.: 62°F |
| MANUFACTURER: C | TEST TEMP.: 74° C. ☐ F. ☒ | DRY BULB TEMP.: 74°F |
| ENGINEER | TECHNICIAN: K. Hoskins | INSPECTOR |
| REF. SPEC. | | DATA SHEET NUMBER |

JOB NUMBER AO-198-AE PAGE OF TEST REPORT NO. TR1-1188

601-2
1/64

GENERAL PRECISION, INC.
LIBRASCOPE GROUP

# ENVIRONMENTAL LABORATORY DATA SHEET

GROUP IV - TEMP STEP STRESS GROUP

| SAMPLE NUMBER | BV7 | VOLTAGE - FULL SCALE = 100 VOLTS BV8 | BV9 | BVCBO |
|---|---|---|---|---|
| 66 | 1956 ' | 1950 ' | 1959 ' | 1903 ' |
| 67 | 1898 ' | 1907 ' | 1902 ' | 1874 ' |
| 68 | 1986 ' | 1989 ' | 1989 ' | 1453 ' |
| 69 | 1885 ' | 1884 ' | 1883 ' | 1857 ' |
| 70 | 1924 ' | 1922 ' | 1920 ' | 1886 ' |
| 71 | 1844 ' | 1844 ' | 1836 ' | 1834 ' |
| 72 | 1882 ' | 1878 ' | 1881 ' | 1858 ' |
| 73 | 1884 ' | 1887 ' | 1887 ' | 1859 ' |
| 74 | 1833 ' | 1832 ' | 1833 ' | 1205 ' |
| 75 | 1901 ' | 1904 ' | 1896 ' | 1869 ' |
| 76 | 1889 ' | 1888 ' | 1890 ' | 1597 ' |
| 77 | 1889 ' | 1893 ' | 1897 ' | 1873 ' |
| 78 | 1927 ' | 1932 ' | 1932 ' | 1261 ' |
| 79 | 1834 ' | 1831 ' | 1805 ' | 1810 ' |
| 80' | 1905 ' | 1922 ' | 1929 ' | 1900 ' |

| | | | |
|---|---|---|---|
| TEST CONDUCTED FOR: NASA, OFFICE OF ADVANCED RESEARCH AND TECHNOLOGY | | | DATE: 4-15-65 |
| TEST: POST-240 HR MEAS. | SAMPLE NUMBER: NOTED | | BAROM. PRESS. 30.13 IN. HG. |
| PART NAME & NUMBER: DTL NAND/NOR GATE - SE 102K | TEST MEDIUM: AIR | | WET BULB TEMP. 62°F |
| MANUFACTURER: C | TEST TEMP. 74° | C. ☐ F. ☒ | DRY BULB TEMP. 74°F |
| ENGINEER | TECHNICIAN: F. Hopkins | INSPECTOR | |
| REF. SPEC. | | DATA SHEET NUMBER | |

JOB NUMBER Ao-138-AE PAGE OF TEST REPORT NO. TRI-1188

601-2
1/64

GENERAL PRECISION, INC.
LIBRASCOPE GROUP

# ENVIRONMENTAL LABORATORY DATA SHEET

GROUP IV - TEMP STEP STRESS GROUP

| SAMPLE NUMBER | VOLTAGE - FULL SCALE = 100 VOLTS BV7 | BV8 | BV9 | BVCBO |
|---|---|---|---|---|
| 81 | 1935 ' | 1937 ' | 1935 ' | 1896 ' |
| 82 | 1885 ' | 1880 ' | 1882 ' | 1846 ' |
| 83 | 1880 ' | 1882 ' | 1882 ' | 1852 ' |
| 84 | 1897 ' | 1906 ' | 1909 ' | 1883 ' |
| 85 | 1945 ' | 1942 ' | 1949 ' | 1585 ' |
| 86 | 1885 ' | 1883 ' | 1881 ' | 1857 ' |
| 87 | 1902 ' | 1905 ' | 1898 ' | 1298 ' |
| 88 | 1880 ' | 1877 ' | 1881 ' | 1316 ' |
| 89 | 1882 ' | 1882 ' | 1879 ' | 1828 ' |
| 90 | 1916 ' | 1910 ' | 1921 ' | 1882 ' |
| 91 | 1897 ' | 1895 ' | 1892 ' | 1869 ' |
| 92 | 1886 ' | 1889 ' | 1888 ' | 1858 ' |
| 93 | 1966 ' | 1969 ' | 1970 ' | 1826 ' |
| 94 | 1885 ' | 1892 ' | 1884 ' | 1856 ' |
| 95 | 1887 ' | 1892 ' | 1889 ' | 1860 ' |
| 96 | 1592 ' | 1906 ' | 1915 ' | 1646 ' |
| 97 | 1931 ' | 1932 ' | 4329 ' | 1880 ' |
| 98 | 1899 ' | 1901 ' | 1897 ' | 1224 ' |
| 99 | 1951 ' | 1934 ' | 1954 ' | 1907 ' |
| 100' | 1909 ' | 1911 ' | 1910 ' | 1880 ' |

| | | | |
|---|---|---|---|
| TEST CONDUCTED FOR: NASA, OFFICE OF ADVANCED RESEARCH AND TECHNOLOGY | | | DATE: 4-15-65 |
| TEST: POST -240 HR. MEAS. | SAMPLE NUMBER: NOTED | | BAROM. PRESS. 30.13 IN. HG. |
| PART NAME & NUMBER: DTL NAND/NOR GATE - SE 102K | TEST MEDIUM: AIR | | WET BULB TEMP. 62°F |
| MANUFACTURER: C | TEST TEMP. 74° | C. ☐ F. ☒ | DRY BULB TEMP. 74°F |
| ENGINEER | TECHNICIAN: H. Hackman | INSPECTOR | |
| REF. SPEC. | | DATA SHEET NUMBER | |

JOB NUMBER AA-138-AE PAGE OF TEST REPORT NO. TR1-1188

601-2
1/64

GENERAL PRECISION, INC.
LIBRASCOPE GROUP

# ENVIRONMENTAL LABORATORY DATA SHEET

GROUP IV - TEMP STEP STRESS GROUP

| SAMPLE NUMBER | BV7 | VOLTAGE - FULL SCALE = 100 VOLTS BV8 | BV9 | BVCBO |
|---|---|---|---|---|
| 101 | 1886 ' | 1888 ' | 1888 ' | 1862 ' |
| 102 | 1889 ' | 1889 ' | 1889 ' | 1854 ' |
| 103 | 1896 ' | 1893 ' | 1885 ' | 1863 ' |
| 104 | 1916 ' | 1876 ' | 1912 ' | 1883 ' |
| 105 | 1885 ' | 1886 ' | 1885 ' | 1324 ' |
| 106 | 1887 ' | 1891 ' | 1889 ' | 1862 ' |
| 107 | 1877 ' | 1887 ' | 1887 ' | 1859 ' |
| 108 | 1898 ' | 1894 ' | 1907 ' | 1881 ' |
| 109 | 1832 ' | 1820 ' | 1819 ' | 1815 ' |
| 110 | 1932 ' | 1935 ' | 1928 ' | 1910 ' |
| 111 | 1888 ' | 1878 ' | 1888 ' | 1852 ' |
| 112 | 1900 ' | 1909 ' | 1900 ' | 1877 ' |
| 113 | 1884 ' | 1888 ' | 1886 ' | 1855 ' |
| 114 | 1918 ' | 1911 ' | 1916 ' | 1890 ' |
| 115 | 1962 ' | 1893 ' | 1967 ' | 1502 ' |

CALIBRATION CHECK

| CALIBRATIONRESISTOR | VOLTAGE - FULL SCALE = 100 VOLTS | | |
|---|---|---|---|
| 20 MEG | 2003 ' | 2004 ' | 2006 ' |
| 10 MEG | 0998 ' | 0999 ' | 0999 ' |
| 5 MEG' | 0498 ' | 0497 ' | 0497 ' |

| | | |
|---|---|---|
| TEST CONDUCTED FOR: NASA, OFFICE OF ADVANCED RESEARCH AND TECHNOLOGY | | DATE: 4-15-65 |
| TEST: POST - 240 HR. TEST | SAMPLE NUMBER: NOTED | BAROM. PRESS.: 30.13 IN. HG. |
| PART NAME & NUMBER: DTL NAND/NOR GATE - SE 102 K | TEST MEDIUM: AIR | WET BULB TEMP.: 62 °F |
| MANUFACTURER: C | TEST TEMP.: 74° C. ☐ F. ☒ | DRY BULB TEMP.: 74 °F |
| ENGINEER | TECHNICIAN: E. Haskins | INSPECTOR |
| REF. SPEC. | | DATA SHEET NUMBER |

JOB NUMBER A0-138-AE PAGE OF TEST REPORT NO. TR1-1188

601-2
1/64

GENERAL PRECISION, INC.
LIBRASCOPE GROUP

# ENVIRONMENTAL LABORATORY DATA SHEET

GROUP I - INSTRUMENTATION CONTROL

PARAMETER: LEAKAGE CURRENT AT 4 VOLTS

CALIBRATION CHECK WITH 10 MEG

| CALIBRATION VOLTAGE | CURRENT - FULL SCALE = 100 NA | | |
|---|---|---|---|
| 1.0 V | 1000 ' | 1000 ' | 1000 ' |
| 0.5 V | 0494 ' | 0499 ' | 0492 ' |

CURRENT - FULL SCALE = 10 NA

0.10 V
0.05 V

| SAMPLE NUMBER | LEAKAGE CURRENT - FULL SCALE = 100 NA | | | | |
|---|---|---|---|---|---|
| | I7 | I8 | I9 | ICBO | I3 |
| 1 | 0036 ' | 0032 ' | 0037 ' | 0200 ' | 0195 ' |
| 2 | 0023 ' | 0024 ' | 0025 ' | 0212 ' | 0220 ' |
| 3 | 0078 ' | 0126 ' | 0076 ' | 0142 ' | 0146 ' |
| 4 | 0015 ' | 0016 ' | 0016 ' | 0136 ' | 0141 ' |
| 5' | 0015 ' | 0015 ' | 0016 ' | 0128 ' | 0133 ' |

| | | | |
|---|---|---|---|
| TEST CONDUCTED FOR: NASA, OFFICE OF ADVANCED RESEARCH AND TECHNOLOGY | | | DATE: 4-15-65 |
| TEST: POST-240 HR MEAS. | SAMPLE NUMBER: NOTED | | BAROM. PRESS.: 30.13 IN. HG. |
| PART NAME & NUMBER: DTL NAND/NOR GATE - SE 102K | TEST MEDIUM: AIR | | WET BULB TEMP.: 62°F |
| MANUFACTURER: C | TEST TEMP.: 74° | C. ☐ F. ☒ | DRY BULB TEMP.: 74°F |
| ENGINEER | TECHNICIAN: T. Haskins | INSPECTOR | |
| REF. SPEC. | | DATA SHEET NUMBER | |

JOB NUMBER A0-138-AE PAGE OF TEST REPORT NO. TR1-1188

601-2
1/64

GENERAL PRECISION, INC.
LIBRASCOPE GROUP

# ENVIRONMENTAL LABORATORY DATA SHEET

GROUP IV - TEMP STEP STRESS GROUP

PARAMETER: LEAKAGE CURRENT AT 4 VOLTS

| SAMPLE NUMBER | CURRENT - FULL SCALE = 100 NA I7 | I8 | I9 | ICBO | I3 |
|---|---|---|---|---|---|
| 66 | 0025 ' | 0023 ' | 0024 ' | 0200 ' | 0212 ' |
| 67 | 0029 ' | 0022 ' | 0021 ' | 0207 ' | 0211 ' |
| 68 | 0030 ' | 0022 ' | 0016 ' | 0224 ' | 0229 ' |
| 69 | 0021 ' | 0020 ' | 0021 ' | 0189 ' | 0196 ' |
| 70 | 0022 ' | 0022 ' | 0023 ' | 0206 ' | 0214 ' |
| 71 | 0018 ' | 0017 ' | 0016 ' | 0123 ' | 0126 ' |
| 72 | 0022 ' | 0020 ' | 0020 ' | 0191 ' | 0193 ' |
| 73 | 0020 ' | 0019 ' | 0020 ' | 0188 ' | 0195 ' |
| 74 | 0015 ' | 0016 ' | 0014 ' | 0116 ' | 0127 ' |
| 75 | 0023 ' | 0020 ' | 0021 ' | 0211 ' | 0211 ' |
| 76 | 0018 ' | 0020 ' | 0020 ' | 0191 ' | 0200 ' |
| 77 | 0023 ' | 0022 ' | 0023 ' | 0213 ' | 0214 ' |
| 78 | 0020 ' | 0021 ' | 0022 ' | 0200 ' | 0218 ' |
| 79 | 0062 ' | 0064 ' | 0062 ' | 0147 ' | 0150 ' |
| 80' | 0022 ' | 0023 ' | 0022 ' | 0220 ' | 0223 ' |

| | | |
|---|---|---|
| TEST CONDUCTED FOR: NASA, OFFICE OF ADVANCED RESEARCH AND TECHNOLOGY | | DATE: 4-15-65 |
| TEST: POST - 240 HR MEAS. | SAMPLE NUMBER: NOTED | BAROM. PRESS. 30.13 IN. HG. |
| PART NAME & NUMBER: DTL NAND/NOR GATE - SE102K | TEST MEDIUM: AIR | WET BULB TEMP. 62°F |
| MANUFACTURER: C | TEST TEMP. 74°F C. ☐ F. ☐ | DRY BULB TEMP. 74°F |
| ENGINEER | TECHNICIAN: F. Nackers | INSPECTOR |
| REF. SPEC. | | DATA SHEET NUMBER |

JOB NUMBER AO-138-AE PAGE OF TEST REPORT NO.

691-1
1/64

GENERAL PRECISION, INC.
LIBRASCOPE GROUP

# ENVIRONMENTAL LABORATORY DATA SHEET

GROUP IV - TEMP STEP STRESS GROUP

PARAMETER: LEAKAGE CURRENT AT 4 VOLTS

| SAMPLE NUMBER | CURRENT - FULL SCALE = 100 NA I7 | I8 | I9 | ICBO | I3 |
|---|---|---|---|---|---|
| 81 | 0023 ' | 0023 ' | 0022 ' | 0219 ' | 0260 ' |
| 82 | 0020 ' | 0019 ' | 0021 ' | 0200 ' | 0201 ' |
| 83 | 0018 ' | 0060 ' | 0020 ' | 0212 ' | 0206 ' |
| 84 | 0050 ' | 0023 ' | 0024 ' | 0212 ' | 0220 ' |
| 85 | 0023 ' | 0021 ' | 0022 ' | 0221 ' | 0229 ' |
| 86 | 0020 ' | 0020 ' | 0020 ' | 0190 ' | 0196 ' |
| 87 | 0023 ' | 0024 ' | 0023 ' | 0217 ' | 0226 ' |
| 88 | 0078 ' | 0025 ' | 0024 ' | 0207 ' | 0216 ' |
| 89 | 0023 ' | 0023 ' | 0022 ' | 0224 ' | 0232 ' |
| 90 | 0022 ' | 0022 ' | 0022 ' | 0211 ' | 0218 ' |
| 91 | 0020 ' | 0021 ' | 0021 ' | 0206 ' | 0211 ' |
| 92 | 0043 ' | 0042 ' | 0045 ' | 0202 ' | 0192 ' |
| 93 | 0025 ' | 0025 ' | 0026 ' | 0321 ' | 0304 ' |
| 94 | 0023 ' | 0024 ' | 0022 ' | 0199 ' | 0202 ' |
| 95 | 0022 ' | 0021 ' | 0021 ' | 0182 ' | 0204 ' |
| 96 | 0038 ' | 0038 ' | 0037 ' | 0209 ' | 0215 ' |
| 97 | 0019 ' | 0019 ' | 0005 ' | 0216 ' | 0222 ' |
| 98 | 0020 ' | 0022 ' | 0020 ' | 0190 ' | 0200 ' |
| 99 | 0014 ' | 0016 ' | 0016 ' | 0207 ' | 0210 ' |
| 100' | 0122 ' | 0121 ' | 0121 ' | 0320 ' | 0337 ' |

| | | |
|---|---|---|
| TEST CONDUCTED FOR: NASA, OFFICE OF ADVANCED RESEARCH AND TECHNOLOGY | | DATE: 4-15-65 |
| TEST: POST-240 HR MEAS. | SAMPLE NUMBER: NOTED | BAROM. PRESS.: 30.13 IN. HG. |
| PART NAME & NUMBER: DTL NAND/NOR GATE - SE 102K | TEST MEDIUM: AIR | WET BULB TEMP.: 62°F |
| MANUFACTURER: C | TEST TEMP.: 74° C. ☐ F. ☒ | DRY BULB TEMP.: 74°F |
| ENGINEER | TECHNICIAN: T. Haskins | INSPECTOR |
| REF. SPEC. | | DATA SHEET NUMBER |

JOB NUMBER Ao-138-AE PAGE OF TEST REPORT NO. TR1-1188

601-2
1/64

GENERAL PRECISION, INC.
LIBRASCOPE GROUP

# ENVIRONMENTAL LABORATORY DATA SHEET

GROUP IV - TEMP STEP STRESS GROUP

PARAMETER: LEAKAGE CURRENT AT 4 VOLTS

| SAMPLE NUMBER | CURRENT - FULL SCALE = 100 NA I7 | I8 | I9 | ICBO | I3 |
|---|---|---|---|---|---|
| 101 | 0020 ' | 0021 ' | 0018 ' | 0186 ' | 0196 ' |
| 102 | 0022 ' | 0020 ' | 0079 ' | 0197 ' | 0201 ' |
| 103 | 0024 ' | 0023 ' | 0022 ' | 0208 ' | 0213 ' |
| 104 | 0023 ' | 0022 ' | 0022 ' | 0211 ' | 0225 ' |
| 105 | 0020 ' | 0020 ' | 0020 ' | 0200 ' | 0207 ' |
| 106 | 0019 ' | 0021 ' | 0018 ' | 0200 ' | 0206 ' |
| 107 | 0023 ' | 0024 ' | 0023 ' | 0201 ' | 0207 ' |
| 108 | 0023 ' | 0024 ' | 0024 ' | 0204 ' | 0216 ' |
| 109 | 0016 ' | 0016 ' | 0017 ' | 0126 ' | 0130 ' |
| 110 | 0023 ' | 0020 ' | 0022 ' | 0229 ' | 0234 ' |
| 111 | 0022 ' | 0020 ' | 0021 ' | 0190 ' | 0203 ' |
| 112 | 0024 ' | 0025 ' | 0024 ' | 0218 ' | 0223 ' |
| 113 | 0020 ' | 0020 ' | 0021 ' | 0188 ' | 0200 ' |
| 114 | 0021 ' | 0021 ' | 0022 ' | 0211 ' | 0214 ' |
| 115 | 0086 ' | 0100 ' | 0085 ' | 0262 ' | 0266 ' |

CALIBRATION CHECK - 100 NA

| CALIBRATION VOLTAGE | | | |
|---|---|---|---|
| 1.0 V | 1000 ' | 1000 ' | 0997 ' |
| 0.5 V | 0497 ' | 0495 ' | 0491 ' |

CALIBRATION CHECK - 10 NA

0.10 V
0.05 V'

| | | | |
|---|---|---|---|
| TEST CONDUCTED FOR: NASA, OFFICE OF ADVANCED RESEARCH AND TECHNOLOGY | | | DATE: 4-15-65 |
| TEST: POST-240 HR MEAS. | SAMPLE NUMBER: NOTED | | BAROM. PRESS.: 30.13 IN. HG. |
| UNIT NAME & NUMBER: DTL NAND/NOR GATE - SE102K | TEST MEDIUM: AIR | | WET BULB TEMP.: 62°F |
| MANUFACTURER: C | TEST TEMP.: 74° | C. ☐ F. ☒ | DRY BULB TEMP.: 74°F |
| ENGINEER | TECHNICIAN: R. Haskins | INSPECTOR | |
| REF. SPEC. | | DATA SHEET NUMBER | |

JOB NUMBER AO-138-AE PAGE OF TEST REPORT NO. TR 1-1188

691-2
V64

GENERAL PRECISION, INC.
LIBRASCOPE GROUP

# ENVIRONMENTAL LABORATORY DATA SHEET

GROUP I - INSTRUMENTATION CONTROL

PARAMETER: RESISTANCE MEASUREMENTS AT 1 MA

CALIBRATION CHECK AT 1 MA

| CALIBRATION RESISTOR | VOLTAGE - FULL SCALE = 100 VOLTS | | |
|---|---|---|---|
| 2000 OHMS | 0199 | 0199 | 0199 |
| 1000 OHMS | 0099 | 0099 | 0099 |
| 500 OHMS | 0050 | 0050 | 0050 |

| SAMPLE NUMBER | RESISTANCE - FULL SCALE = 100K OHMS | | |
|---|---|---|---|
| | R1 | R2 | R3 |
| 1 | 0195 | 0183 | 2123 |
| 2 | 0200 | 0189 | 2148 |
| 3 | 0191 | 0180 | 2040 |
| 4 | 0213 | 0191 | 2098 |
| 5' | 0203 | 0190 | 2102 |

| | | |
|---|---|---|
| TEST CONDUCTED FOR: NASA, OFFICE OF ADVANCED RESEARCH AND TECHNOLOGY | | DATE: 4-19-65 |
| TEST: POST-240 HR MEAS. | SAMPLE NUMBER: NOTED | BAROM PRESS: IN. HG. |
| PART NAME & NUMBER: DTL NAND/NOR GATE - SE102K | TEST MEDIUM: AIR | WET BULB TEMP: 61°F |
| MANUFACTURER: C | TEST TEMP. 74° C. ☐ F. ☑ | DRY BULB TEMP.: 74°F |
| ENGINEER: | TECHNICIAN: C. Calvert | INSPECTOR: |
| REF. SPEC.: | | DATA SHEET NUMBER: |

JOB NUMBER AO-138-AF PAGE OF TEST REPORT NO. TR1-1188

601-2
1/64

GENERAL PRECISION, INC.
LIBRASCOPE GROUP

# ENVIRONMENTAL LABORATORY DATA SHEET

GROUP IV - TEMP STEP STRESS GROUP

PARAMETER: RESISTANCE MEASUREMENTS AT 1 MA

RESISTANCE - FULL SCALE = 100 ohms

| SAMPLE number | R1 | R2 | R3 |
|---|---|---|---|
| 66 | 0204 | 0193 | 2177 |
| 67 | 0200 | 0186 | 2125 |
| 68 | 0187 | 0181 | 2079 |
| 69 | 0195 | 0181 | 2105 |
| 70 | 0191 | 0181 | 1517 |
| 71 | 0212 | 0199 | 1759 |
| 72 | 0203 | 0190 | 2149 |
| 73 | 0208 | 0192 | 2148 |
| 74 | 0211 | 0197 | 2119 |
| 75 | 0202 | 0189 | 2122 |
| 76 | 0194 | 0182 | 2086 |
| 77 | 0198 | 0184 | 2115 |
| 78 | 0196 | 0185 | 2104 |
| 79 | 0210 | 0197 | 1844 |
| 80' | 0207 | 0194 | 2182 |

| | | |
|---|---|---|
| TEST CONDUCTED FOR: NASA, OFFICE OF ADVANCED RESEARCH AND TECHNOLOGY | | DATE: 4-19-65 |
| TEST: POST - 240 HR MEAS. | SAMPLE NUMBER: NOTED | BAROM PRESS. IN. HG |
| PART NAME & NUMBER: DTL NAND/NOR GATE - SE102K | TEST MEDIUM: AIR | WET BULB TEMP. 61°F |
| MANUFACTURER: C | TEST TEMP. 74° C. ☐ F. ☑ | DRY BULB TEMP. 74°F |
| ENGINEER: | TECHNICIAN: C. Calvo | INSPECTOR: |
| REF. SPEC. | | DATA SHEET NUMBER |

JOB NUMBER AO-138-AE PAGE OF TEST REPORT NO. TR1-1188

601-2
1/64

GENERAL PRECISION, INC.
LIBRASCOPE GROUP

# ENVIRONMENTAL LABORATORY DATA SHEET

GROUP IV - TEMPXSTEP STRESS GROUP

PARAMETER: RESISTANCE MEASUREMENTS AT 1 MA

| SAMPLE NUMBER | RESISTANCE - FULL SCALE = 100 K OHMS R1 | R2 | R3 |
|---|---|---|---|
| 81 | 0196 | 0183 | 2079 |
| 82 | 0192 | 0179 | 2063 |
| 83 | 0192 | 0180 | 2084 |
| 84 | 0190 | 0179 | 1957 |
| 85 | 0198 | 0186 | 2110 |
| 86 | 0195 | 0182 | 2089 |
| 87 | 0196 | 0185 | 2086 |
| 88 | 0192 | 0180 | 2056 |
| 89 | 0193 | 0179 | 2055 |
| 90 | 0189 | 0179 | 2035 |
| 91 | 0202 | 0191 | 2144 |
| 92 | 0192 | 0181 | 2066 |
| 93 | 0199 | 0192 | 2187 |
| 94 | 0194 | 0182 | 2070 |
| 95 | 0195 | 0183 | 2104 |
| 96 | 0194 | 0182 | 2082 |
| 97 | 0198 | 0192 | 2152 |
| 98 | 0195 | 0183 | 2069 |
| 99 | 0208 | 0196 | 2215 |
| 100' | 0195 | 0184 | 2002 |

| | | |
|---|---|---|
| TEST CONDUCTED FOR: NASA OFFICE OF ADVANCED RESEARCH AND TECHNOLOGY | | DATE: 4-19-65 |
| TEST: POST - 240 HR MEAS. | SAMPLE NUMBER: NOTED | BAROM. PRESS. IN HG. |
| PART NAME & NUMBER: DTL NAND/NOR GATE - SE 102 K | TEST MEDIUM: AIR | WET BULB TEMP. 61°F |
| MANUFACTURER: C | TEST TEMP. 74° C. ☐ F. ☑ | DRY BULB TEMP. 74°F |
| ENGINEER: | TECHNICIAN: C. Culver | INSPECTOR: |
| REF. SPEC. | | DATA SHEET NUMBER |

JOB NUMBER A0-138-AE PAGE OF TEST REPORT NO. TR1-1188

601-2
1/64

GENERAL PRECISION, INC.
LIBRASCOPE GROUP

# ENVIRONMENTAL LABORATORY DATA SHEET

GROUP IV - TEMP STEP STRESS GROUP

PARAMETER: RESISTANCE MEASUREMENTS AT 1 MA

| SAMPLE NUMBER | R1 | RESISTANCE - FULL SCALE = 100K OHMS R2 | R3 |
|---|---|---|---|
| 101 | 0195 | 0183 | 2093 |
| 102 | 0192 | 0179 | 2065 |
| 103 | 0196 | 0183 | 2090 |
| 104 | 0189 | 0179 | 2030 |
| 105 | 0196 | 0182 | 2089 |
| 106 | 0199 | 0185 | 2110 |
| 107 | 0195 | 0183 | 2090 |
| 108 | 0197 | 0185 | 2111 |
| 109 | 0211 | 0198 | 2120 |
| 110 | 0200 | 0187 | 2150 |
| 111 | 0195 | 0183 | 2104 |
| 112 | 0197 | 0184 | 2103 |
| 113 | 0194 | 0180 | 2073 |
| 114 | 0200 | 0188 | 2115 |
| 115 | 0193 | 0181 | 2063 |

CALIBRATION CHECK

| CALIBRATION RESISTOR | | VOLTAGE - FULL SCALE = 10 0 VOLTS | |
|---|---|---|---|
| 2000 OHMS | 0200 | 0200 | 0200 |
| 1000 OHMS | 0099 | 0099 | 0099 |
| 500 OHMS' | 0050 | 0050 | 0050 |

| | | |
|---|---|---|
| TEST CONDUCTED FOR: NASA, OFFICE OF ADVANCED RESEARCH AND TECHNOLOGY | | DATE: 4-20-65 |
| TEST: POST - 240 HR MEAS. | SAMPLE NUMBER: NOTED | BAROM. PRESS. IN. HG |
| PART NAME & NUMBER: DTL NAND/NOR GATE - SE102K | TEST MEDIUM: AIR | WET BULB TEMP. 61°F |
| MANUFACTURER: C | TEST TEMP. 74° C. ☐ F. ☑ | DRY BULB TEMP. 74°F |
| ENGINEER: TECHNICIAN: C. Culver | INSPECTOR | |
| REF. SPEC. | DATA SHEET NUMBER | |

JOB NUMBER A0-138-AE PAGE OF TEST REPORT NO. TR1-1188

601-2
1/64

GENERAL PRECISION, INC.
LIBRASCOPE GROUP

# ENVIRONMENTAL LABORATORY DATA SHEET

GROUP I - INSTRUMENTATION CONTROL

CALIBRATION: CURRENT FULL SCALE = 10 MA
RESISTOR

| | | | |
|---|---|---|---|
| 2000 OHMS | 2006 | 2008 | 2009 |
| 1000 OHMS | 4005 | 4014 | 4016 |

PARAMETER: DIODE FORWARD CURRENT WITH V10 = 4 VOLTS

| SAMPLE NUMBER | CURRENT FULL SCALE = 10 MA If7 | If8 | If9 |
|---|---|---|---|
| 1 | 1763 | 1767 | 1771 |
| 2 | 1721 | 1718 | 1720 |
| 3 | 1798 | 1802 | 1802 |
| 4 | 1698 | 1700 | 1702 |
| 5 | 1712 | 1713 | 1713 |

| | | |
|---|---|---|
| TEST CONDUCTED FOR: NASA, OFFICE OF ADVANCED RESEARCH AND TECHNOLOGY | | DATE: 4-20-65 |
| TEST: POST - 240 HR MEAS. | SAMPLE NUMBER: NOTED | BAROM. PRESS. IN. HG. |
| PART NAME & NUMBER: DTL NAND/NOR GATE - SE 102K | TEST MEDIUM: AIR | WET BULB TEMP. 61°F |
| MANUFACTURER: C | TEST TEMP. 74° C. ☐ F. ☑ | DRY BULB TEMP. 74°F |
| ENGINEER: | TECHNICIAN: C. Cuber | INSPECTOR: |
| REF. SPEC. | | DATA SHEET NUMBER |

JOB NUMBER A0-138-AE PAGE OF TEST REPORT NO. TR1-1188

601-2
1/64

GENERAL PRECISION, INC.
LIBRASCOPE GROUP

# ENVIRONMENTAL LABORATORY DATA SHEET

GROUP IV - TEMP STEP STRESS GROUP

PARAMETER: DIODE FORWARD CURRENT WITH V6 = 4 VOLTS

| SAMPLE NUMBER | If7 | CURRENT - FULL SCALE = 10 MA If8 | If9 |
|---|---|---|---|
| 66 | 1689 | 1684 | 1692 |
| 67 | 1761 | 1759 | 1755 |
| 68 | 1792 | 1794 | 1797 |
| 69 | 1799 | 1801 | 1802 |
| 70 | 1806 | 1803 | 1796 |
| 71 | 1637 | 1635 | 1635 |
| 72 | 1716 | 1722 | 1721 |
| 73 | 1697 | 1695 | 1691 |
| 74 | 1644 | 1651 | 1645 |
| 75 | 1715 | 1716 | 1720 |
| 76 | 1788 | 1786 | 1785 |
| 77 | 1765 | 1764 | 1764 |
| 78 | 1757 | 1755 | 1756 |
| 79 | 1643 | 1641 | 1646 |
| 80' | 1674 | 1677 | 1671 |

| | | |
|---|---|---|
| TEST CONDUCTED FOR: NASA, OFFICE OF ADVANCED RESEARCH AND TECHNOLOGY | | DATE: 4-20-65 |
| TEST: POST-240 HR MEAS. | SAMPLE NUMBER: NOTED | BAROM. PRESS. IN. HG. |
| PART NAME & NUMBER: DTL NAND/NOR GATE-SE102K | TEST MEDIUM: AIR | WET BULB TEMP. 61°F |
| MANUFACTURER: C | TEST TEMP. 74° C. ☐ F. ☑ | DRY BULB TEMP. 74°F |
| ENGINEER: | TECHNICIAN: C. Cuba | INSPECTOR: |
| REF. SPEC. | | DATA SHEET NUMBER |

JOB NUMBER A0-138-AE PAGE OF TEST REPORT NO. TR1-1188

601-2
1/64

GENERAL PRECISION, INC.
LIBRASCOPE GROUP

# ENVIRONMENTAL LABORATORY DATA SHEET

GROUP IV- TEMP STEP STRESS GROUP

PARAMETER: DIODE FORWARD CURRENT WITH V6 = 4'VOLTS

| SAMPLE NUMBER | If7 | CURRENT - FULL SCALE = 10 MA If8 | If9 |
|---|---|---|---|
| 81 | 1772 | 1775 | 1773 |
| 82 | 1805 | 1807 | 1803 |
| 83 | 1804 | 1801 | 1802 |
| 84 | 1810 | 1812 | 1810 |
| 85 | 1742 | 1740 | 1736 |
| 86 | 1779 | 1782 | 1775 |
| 87 | 1741 | 1748 | 1745 |
| 88 | 1804 | 1807 | 1810 |
| 89 | 1815 | 1812 | 1812 |
| 90 | 1810 | 1807 | 1810 |
| 91 | 1702 | 1696 | 1701 |
| 92 | 1788 | 1792 | 1791 |
| 93 | 1685 | 1682 | 1680 |
| 94 | 1782 | 1780 | 1778 |
| 95 | 1772 | 1768 | 1762 |
| 96 | 1775 | 1771 | 1770 |
| 97 | 1679 | 1681 | open |
| 98 | 1764 | 1768 | 1764 |
| 99 | 1654 | 1654 | 1651 |
| 100' | 1776 | 1773 | 1770 |

| | | |
|---|---|---|
| TEST CONDUCTED FOR: NASA, OFFICE OF ADVANCED RESEARCH AND TECHNOLOGY | | DATE: 4-20-65 |
| TEST: POST-240 HR MEAS. | SAMPLE NUMBER: NOTED | BAROM. PRESS. IN. HG. |
| PART NAME & NUMBER: DTL NAND/NOR GATE-SE102K | TEST MEDIUM: AIR | WET BULB TEMP. 61°F |
| MANUFACTURER: C | TEST TEMP. 74° C. ☐ F. ☑ | DRY BULB TEMP. 74°F |
| ENGINEER: C. Cohen | TECHNICIAN | INSPECTOR |
| REF. SPEC. | | DATA SHEET NUMBER |

JOB NUMBER A0-138-AE PAGE OF TEST REPORT NO. TR1-1188

601-2
1/64

GENERAL PRECISION, INC.
LIBRASCOPE GROUP

# ENVIRONMENTAL LABORATORY DATA SHEET

GROUP IV - TEMP STEP STRESS GROUP

PARAMETER: DIODE FORWARD CURRENT WITH V6 = 4 VOLTS

| SAMPLE NUMBER | CURRENT - FULL SCALE = 10 MA IF7 | IF8 | IF9 |
|---|---|---|---|
| 101 | 1781 | 1784 | 1781 |
| 102 | 1812 | 1810 | 1807 |
| 103 | 1774 | 1775 | 1775 |
| 104 | 1809 | 1808 | 1815 |
| 105 | 1776 | 1775 | 1781 |
| 106 | 1752 | 1748 | 1759 |
| 107 | 1772 | 1764 | 1777 |
| 108 | 1764 | 1772 | 1770 |
| 109 | 1649 | 1652 | 1650 |
| 110 | 1739 | 1740 | 1748 |
| 111 | 1795 | 1793 | 1795 |
| 112 | 1785 | 1782 | 1781 |
| 113 | 1818 | 1820 | 1821 |
| 114 | 1739 | 1740 | 1740 |
| 115 | 1812 | 1813 | 1811 |

CALIBRATION CHECK

| CALIBRATION RESISTOR | CURRENT - FULL SCALE = 10 MA | | |
|---|---|---|---|
| 2000 OHMS | 2026 | 2024 | 2016 |
| 1000 OHMS | 4026 | 4030 | 4028 |

| | | |
|---|---|---|
| TEST CONDUCTED FOR: NASA, OFFICE OF ADVANCED RESEARCH AND TECHNOLOGY | | DATE: 4-20-65 |
| TEST: POST - 240 HR MEAS. | SAMPLE NUMBER: NOTED | BAROM. PRESS. IN. HG. |
| PART NAME & NUMBER: DTL NAND/NOR GATE - SE 102K | TEST MEDIUM: AIR | WET BULB TEMP. ~~74°~~ 61°F |
| MANUFACTURER: C | TEST TEMP. 74° C. ☐ F. ☑ | DRY BULB TEMP. 74°F |
| ENGINEER: C. Culver | TECHNICIAN: | INSPECTOR: |
| REF. SPEC. | | DATA SHEET NUMBER |

JOB NUMBER A0-138-AE PAGE OF TEST REPORT NO. TR1-1188

601-2
1/64

GENERAL PRECISION, INC.
LIBRASCOPE GROUP

# ENVIRONMENTAL LABORATORY DATA SHEET

GROUP I - INSTRUMENTATION CONTROL

PARAMETER: OUTPUT SATURATION VOLTAGE AT Ic = 10 MA - Ib = 1 MA

CALIBRATION CHECK AT Ic = 10MA - Ib = 1 MA

| CALIBRATION RESISTOR | VOLTAGE - FULL SCALE = 10 VOLTS | | |
|---|---|---|---|
| 500 OHMS | 0500 | 0500 | 0500 |
| 50 OHMS | 0501 | 0501 | 0501 |

| SAMPLE NUMBER | V3 | VOLTAGE - FULL SCALE = 10 VOLTS |
|---|---|---|
| 1 | 0235 | |
| 2 | 0240 | |
| 3 | 0230 | |
| 4 | 0242 | |
| 5' | 0231 | |

| | | |
|---|---|---|
| TEST CONDUCTED FOR: NASA, OFFICE OF ADVANCED RESEARCH AND TECHNOLOGY | | DATE: 4-19-65 |
| TEST: POST - 240 HR. MEAS. | SAMPLE NUMBER: NOTED | BAROM. PRESS. IN. HG. |
| PART NAME & NUMBER: DTL NAND/NOR GATE - SE102K | TEST MEDIUM: AIR | WET BULB TEMP. 61°F |
| MANUFACTURER: C | TEST TEMP. 74° C. ☐ F. ☒ | DRY BULB TEMP. 74°F |
| ENGINEER | TECHNICIAN: BOGAN | INSPECTOR |
| REF. SPEC. | | DATA SHEET NUMBER |

JOB NUMBER Ao-138-AE PAGE OF TEST REPORT NO. TR1-1188

601-2
1/64

GENERAL PRECISION, INC.
LIBRASCOPE GROUP

# ENVIRONMENTAL LABORATORY DATA SHEET

GROUP IV - TEMP STEP STRESS GROUP

PARAMETER: OUTPUT SATURATION VOLTAGE AT Ic= 10 MA Ib = 1 MA

VOLTAGE - FULL SCALE = 10 VOLTS

| SAMPLE NUMBER | V3 |
|---|---|
| 66 | 0261 |
| 67 | 0242 |
| 68 | 0267 |
| 69 | 0239 |
| 70 | 0243 |
| 71 | 0239 |
| 72 | 0238 |
| 73 | 0229 |
| 74 | 0241 |
| 75 | 0236 |
| 76 | 0236 |
| 77 | 0242 |
| 78 | 0244 |
| 79 | 0233 |
| 80' | 0249 |

| | | |
|---|---|---|
| TEST CONDUCTED FOR: NASA OFFICE OF ADVANCED RESEARCH AND TECHNOLOGY | | DATE: 4-19-65 |
| TEST: POST - 240 HR MEAS. | SAMPLE NUMBER: NOTED | BAROM. PRESS. IN. HG. |
| PART NAME & NUMBER: DTL NAND/NOR GATE - SE 102 K | TEST MEDIUM: AIR | WET BULB TEMP. 61°F |
| MANUFACTURER: C | TEST TEMP. 74° C. ☐ F. ☑ | DRY BULB TEMP. 74°F |
| ENGINEER | TECHNICIAN: BOGAN | INSPECTOR |
| REF. SPEC. | | DATA SHEET NUMBER |

JOB NUMBER AO-138-AF PAGE OF TEST REPORT NO. TR 1-1189

401-2
1/64

GENERAL PRECISION, INC.
LIBRASCOPE GROUP

# ENVIRONMENTAL LABORATORY DATA SHEET

GROUP IV - TEMP STEP STRESS GROUP

PARAMETER: OUTPUT SATURATION VOLTAGE AT Ic= 10 MA Ib = 1 MA

VOLTAGE - FULL SCALE = 10 VOLTS

| SAMPLE NUMBER | V3 |
|---|---|
| 81 | 0247 |
| 82 | 0233 |
| 83 | 0246 |
| 84 | 0240 |
| 85 | 0246 |
| 86 | 0239 |
| 87 | 0248 |
| 88 | 0238 |
| 89 | 0236 |
| 90 | 0244 |
| 91 | 0236 |
| 92 | 0240 |
| 93 | 0258 |
| 94 | 0233 |
| 95 | 0242 |
| 96 | 0248 |
| 97 | 0252 |
| 98 | 0243 |
| 99 | 0256 |
| 100' | 0243 |

| | | |
|---|---|---|
| TEST CONDUCTED FOR: NASA OFFICE OF ADVANCED RESEARCH AND TECHNOLOGY | | DATE: 4-19-65 |
| TEST: POST - 240 HR. MEAS. | SAMPLE NUMBER: NOTED | BAROM. PRESS. IN. HG. |
| PART NAME & NUMBER: DTL NAND/NOR GATE - SE102K | TEST MEDIUM: AIR | WET BULB TEMP. 61°F |
| MANUFACTURER: C | TEST TEMP. 74° C. ☐ F. ☒ | DRY BULB TEMP. 74°F |
| ENGINEER | TECHNICIAN: BOGAN | INSPECTOR |
| REF. SPEC. | | DATA SHEET NUMBER |

JOB NUMBER A0-138-AF PAGE OF TEST REPORT NO. TR1-1188

601-2
1/64

GENERAL PRECISION, INC.
LIBRASCOPE GROUP

# ENVIRONMENTAL LABORATORY DATA SHEET

GROUP IV - TEMP STEP STRESS GROUP

PARAMETER: OUTPUT SATURATION VOLTAGE AT Ic= 10 MA Ib = 1 MA

VOLTAGE - FULL SCALE = 10 VOLTS

| SAMPLE NUMBER | V3 |
|---|---|
| 101 | 0236 |
| 102 | 0239 |
| 103 | 0239 |
| 104 | 0249 |
| 105 | 0231 |
| 106 | 0230 |
| 107 | 0235 |
| 108 | 0240 |
| 109 | 0233 |
| 110 | 0256 |
| 111 | 0237 |
| 112 | 0251 |
| 113 | 0243 |
| 114 | 0235 |
| 115 | 0236 |

CALIBRATION CHECK AT Ic = 10MA - Ib = 1 MA

VOLTAGE - FULL SCALE = 10 VOLTS

| CALIBRATION RESISTOR | | | |
|---|---|---|---|
| 500 OHMS | 0500 | 0500 | 0500 |
| 50 OHMS' | 0501 | 0501 | 0501 |

| | | | |
|---|---|---|---|
| TEST CONDUCTED FOR: NASA, OFFICE OF ADVANCED RESEARCH AND TECHNOLOGY | | | DATE: 4-19-65 |
| TEST: POST - 240 HR MEAS. | SAMPLE NUMBER: NOTED | | BAROM PRESS. IN. HG. |
| PART NAME & NUMBER: DTL NAND/NOR GATE - SE102K | TEST MEDIUM: AIR | | WET BULB TEMP.: 61°F |
| MANUFACTURER: C | TEST TEMP.: 74° | C. ☐ F. ☑ | DRY BULB TEMP.: 74°F |
| ENGINEER | TECHNICIAN: BOGAN | INSPECTOR | |
| REF. SPEC. | | DATA SHEET NUMBER | |

JOB NUMBER A0-138-AE PAGE OF TEST REPORT NO. TR1-1188

601-2
1/64

GENERAL PRECISION, INC.
LIBRASCOPE GROUP

# ENVIRONMENTAL LABORATORY DATA SHEET

GROUP I - INSTRUMENTATION CONTROL GROUP

PARAMETER: DC CURRENT GAIN VCE= 0.5 VOLTS
IC = 1.0 MA

CALIBRASION: NONE

BASE CURRENT - FULL SCALE = 100UA

| SAMPLE NUMBER | IB1 |
|---|---|
| 1 | 22.77 |
| 2 | 17.66 |
| 3 | 22.70 |
| 4 | 27.24 |
| 5' | 20.90 |

| | | |
|---|---|---|
| TEST CONDUCTED FOR: NASA, OFFICE OF ADVANCED RESEARCH AND TECHNOLOGY | | DATE: 4-22-65 |
| TEST: POST - 240 HR MEAS. | SAMPLE NUMBER: NOTED | BAROM. PRESS. IN. HG. |
| PART NAME & NUMBER: DTL NAND/NOR GATE - SE102K | TEST MEDIUM: AIR | WET BULB TEMP. 62°F |
| MANUFACTURER: C | TEST TEMP. 73° C. ☐ F. ☑ | DRY BULB TEMP. 73°F |
| ENGINEER | TECHNICIAN: C. Cuba | INSPECTOR |
| REF. SPEC. | | DATA SHEET NUMBER |

JOB NUMBER AO-138-AE PAGE OF TEST REPORT NO. TR1-1188

2011
4/65

GENERAL PRECISION, INC.
LIBRASCOPE GROUP

# ENVIRONMENTAL LABORATORY DATA SHEET

GROUP IV - TEMP STEP STRESS GROUP

PARAMETER: DC CURRENT GAIN VCE = 0.5 VOLTS
IC = 1.0 MA

BASE CURRENT - FULL SCALE = 100 UA

| SAMPLE NUMBER | IB |
|---|---|
| 66 | 27.02 |
| 67 | 16.92 |
| 68 | 23.97 |
| 69 | 24.99 |
| 70 | 19.60 |
| 71 | 21.64 |
| 72 | 24.31 |
| 73 | 19.57 |
| 74 | 19.94 |
| 75 | 18.28 |
| 76 | 25.15 |
| 77 | 17.51 |
| 78 | 19.94 |
| 79 | 16.67 |
| 80' | 17.00 |

| | | |
|---|---|---|
| TEST CONDUCTED FOR: NASA, OFFICE OF ADVANCED RESEARCH AND TECHNOLOGY | | DATE: 4-22-65 |
| TEST: POST-240 HR MEAS. | SAMPLE NUMBER: NOTED | BAROM. PRESS. IN. HG. |
| PART NAME & NUMBER: DTL NAND/NOR GATE - SE102K | TEST MEDIUM: AIR | WET BULB TEMP. 62°F |
| MANUFACTURER: C | TEST TEMP. 73° C. ☐ F. ☑ | DRY BULB TEMP. 73°F |
| ENGINEER: | TECHNICIAN: C. Cuhar | INSPECTOR: |
| REF. SPEC. | | DATA SHEET NUMBER |

JOB NUMBER A0-138-AE PAGE OF TEST REPORT NO. TR1-1188

2011
4/65

GENERAL PRECISION, INC.
LIBRASCOPE GROUP

# ENVIRONMENTAL LABORATORY DATA SHEET

GROUP IV - TEMP STEP STRESS GROUP

PARAMETER: DC CURRENT GAIN VCE = 0.5 VOLTS
IC = 1.0 MA

BASE CURRENT - FULL SCALE = 100 UA

| SAMPLE NUMBER | IB |
|---|---|
| 81 | 20.41 |
| 82 | 22.06 |
| 83 | 29.66 |
| 84 | 19.05 |
| 85 | 17.43 |
| 86 | 26.09 |
| 87 | 21.04 |
| 88 | 20.87 |
| 89 | 17.90 |
| 90 | 22.44 |
| 91 | 16.73 |
| 92 | 25.52 |
| 93 | 25.48 |
| 94 | 17.99 |
| 95 | 25.40 |
| 96 | 28.51. |
| 97 | 21.00 |
| 98 | 25.44 |
| 99 | 24.40 |
| 100' | 24.31 |

| | | |
|---|---|---|
| TEST CONDUCTED FOR: NASA OFFICE OF ADVANCED RESEARCH AND TECHNOLOGY | | DATE: 4-22-65 |
| TEST: POST-240 HR MEAS. | SAMPLE NUMBER: NOTED | BAROM. PRESS. IN. HG. |
| PART NAME & NUMBER: DTL NAND/NOR GATE - SE 102K | TEST MEDIUM: AIR | WET BULB TEMP. 62°F |
| MANUFACTURER: C | TEST TEMP. 73°F C. ☐ F. ☐ | DRY BULB TEMP. 73°F |
| ENGINEER | TECHNICIAN: C. Cuhrer | INSPECTOR |
| REF. SPEC. | | DATA SHEET NUMBER |

JOB NUMBER AO-138-AE PAGE OF TEST REPORT NO. TR1-1188

2011
4/65

GENERAL PRECISION, INC.
LIBRASCOPE GROUP

# ENVIRONMENTAL LABORATORY DATA SHEET

GROUP IV - TEMP STEP STRESS GROUP

PARAMETER: DC CURRENT GAIN VCE = 0.5 VOLTS
IC = 1.0 MA

BASE CURRENT - FULL SCALE = 100 UA

| SAMPLE NUMBER | IB |
|---|---|
| 101 | 23.10 |
| 102 | 24.40 |
| 103 | 18.32 |
| 104 | 23.73 |
| 105 | 19.29 |
| 106 | 18.02 |
| 107 | 19.00 |
| 108 | 18.16 |
| 109 | 18.36 |
| 110 | 23.94 |
| 111 | 23.45 |
| 112 | 22.08 |
| 113 | 27.29 |
| 114 | 18.39 |
| 115' | 17.91 |

| | | |
|---|---|---|
| TEST CONDUCTED FOR: NASA OFFICE OF ADVANCED RESEARCH AND TECHNOLOGY | | DATE: 4-22-65 |
| TEST: POST-240 HR. MEAS. | SAMPLE NUMBER: NOTED | BAROM. PRESS. IN. HG. |
| PART NAME & NUMBER: DTL NAND/NOR GATE - SE 102K | TEST MEDIUM: AIR | WET BULB TEMP. 62°F |
| MANUFACTURER: C | TEST TEMP. 73° C. ☐ F. ☑ | DRY BULB TEMP. 73°F |
| ENGINEER | TECHNICIAN: C. Cuba | INSPECTOR |
| REF. SPEC. | | DATA SHEET NUMBER |

JOB NUMBER A0-138-AE PAGE OF TEST REPORT NO. TR1-1188

2011
4/65

GENERAL PRECISION, INC.
LIBRASCOPE GROUP

# ENVIRONMENTAL LABORATORY DATA SHEET

GROUP II - LIFE TEST GROUP

PARAMETER: DC CURRENT GAIN VCE= 0.5 VOLTS
IC = 1.0 MA

BASE CURRENT - FULL SCALE = 100UA

| SAMPLE NUMBER | IB |
|---|---|
| 26 | 26.22 |
| 27 | 23.87 |
| 28 | 18.42 |
| 29 | 16.08 |
| 30 | 23.98 |
| 31 | 16.62 |
| 32 | 21.48 |
| 33 | 21.22 |
| 34 | 28.07 |
| 35 | 15.55 |
| 36 | 18.11 |
| 37 | 23.63 |
| 38 | 17.66 |
| 39 | 20.60 |
| 40 | 18.22 |
| 41 | 24.12 |
| 42 | 15.72 |
| 43 | 22.13 |
| 44 | 20.34 |
| 45' | 17.00 |

| | | |
|---|---|---|
| TEST CONDUCTED FOR: NASA, OFFICE OF ADVANCED RESEARCH AND TECHNOLOGY | | DATE: 4-24-65 |
| TEST: POST - 100 HR. MEAS | SAMPLE NUMBER: NOTED | BAROM. PRESS. IN. HG. |
| PART NAME & NUMBER: DTL NAND/NOR GATE - SE102K | TEST MEDIUM: AIR | WET BULB TEMP. 61°F |
| MANUFACTURER: C | TEST TEMP. 74 C. ☐ F. ☒ | DRY BULB TEMP. 74°F |
| ENGINEER | TECHNICIAN | INSPECTOR |
| REF. SPEC. | | DATA SHEET NUMBER |

JOB NUMBER A0-138-AE PAGE OF TEST REPORT NO. TR1-1188

2011
4/65

GENERAL PRECISION, INC.
LIBRASCOPE GROUP

# ENVIRONMENTAL LABORATORY DATA SHEET

GROUP II - LIFE TEST GROUP

PARAMETER: DC CURRENT GAIN VCE= 0.5 VOLTS
IC = 1.0 MA

BASE CURRENT - FULL SCALE = 100UA

| SAMPLE NUMBER | IB |
|---|---|
| 6 | 16.94 |
| 7 | 23.77 |
| 8 | 14.98 |
| 9 | 20.07 |
| 10 | 20.17 |
| 11 | 21.76 |
| 12 | 23.28 |
| 13 | 15.05 |
| 14 | 16.43 |
| 15 | 24.63 |
| 16 | 25.34 |
| 17 | 16.13 |
| 18 | 17.77 |
| 19 | 15.46 |
| 20 | 17.46 |
| 21 | 21.89 |
| 22 | 20.30 |
| 23 | 24.32 |
| 24 | 15.78 |
| 25' | 26.02 |

| | | |
|---|---|---|
| TEST CONDUCTED FOR: NASA, OFFICE OF ADVANCED RESEARCH AND TECHNOLOGY | | DATE: 4-24-65 |
| TEST: POST-100 HR. MEAS. | SAMPLE NUMBER: NOTED | BAROM. PRESS. IN. HG. |
| PART NAME & NUMBER: DTL NAND/NOR GATE - SE102K | TEST MEDIUM: AIR | WET BULB TEMP. 61°F |
| MANUFACTURER: C | TEST TEMP. 74° C. ☐ F. ☒ | DRY BULB TEMP. 74°F |
| ENGINEER / TECHNICIAN | INSPECTOR | |
| REF. SPEC. | DATA SHEET NUMBER | |

JOB NUMBER A0-138-AE PAGE OF TEST REPORT NO. TR1-1188

2011
4/65

GENERAL PRECISION, INC.
LIBRASCOPE GROUP

# ENVIRONMENTAL LABORATORY DATA SHEET

GROUP I - INSTRUMENTATION CONTROL GROUP

PARAMETER: DC CURRENT GAIN VCE = 0.5 VOLTS
IC = 1.0 MA

CALIBRATION: NONE

BASE CURRENT - FULL SCALE = 100 UA

| SAMPLE NUMBER | IB |
|---|---|
| 1 | 21.20 |
| 2 | 16.69 |
| 3 | 21.38 |
| 4 | 25.77 |
| 5' | 19.50 |

| | | |
|---|---|---|
| TEST CONDUCTED FOR: NASA, OFFICE OF ADVANCED RESEARCH AND TECHNOLOGY | | DATE: 4-24-65 |
| TEST: POST-100 HR. MEAS. | SAMPLE NUMBER: NOTED | BAROM. PRESS. IN. HG. |
| PART NAME & NUMBER: DTL NAND/NOR GATE-SE102K | TEST MEDIUM: AIR | WET BULB TEMP.: 61°F |
| MANUFACTURER: C | TEST TEMP.: 74° C. ☐ F. ☒ | DRY BULB TEMP.: 74°F |
| ENGINEER / TECHNICIAN | INSPECTOR | |
| REF. SPEC. | DATA SHEET NUMBER | |

JOB NUMBER A0-138-AE PAGE OF TEST REPORT NO. TR1-1188

2011
4/65

GENERAL PRECISION, INC.
LIBRASCOPE GROUP

# ENVIRONMENTAL LABORATORY DATA SHEET

GROUP II- LIFE TEST GROUP

PARAMETER: OUTPUT SATURATION VOLTAGE AT Ic= 10 MA Ib = 1 MA

VOLTAGE - FULL SCALE = 10 VOLTS

| SAMPLE NUMBER | V3 |
|---|---|
| 26 | 0211 ' |
| 27 | 0223 ' |
| 28 | 0232 ' |
| 29 | 0214 ' |
| 30 | 0206 ' |
| 31 | 0207 ' |
| 32 | 0220 ' |
| 33 | 0203 ' |
| 34 | 0220 ' |
| 35 | 0207 ' |
| 36 | 0210 ' |
| 37 | 0209 ' |
| 38 | 0206 ' |
| 39 | 0210 ' |
| 40 | 0218 ' |
| 41 | 0215 ' |
| 42 | 0216 ' |
| 43 | 0211 ' |
| 44 | 0209 ' |
| 45 | 0205 ' |

CALIBRATION CHECK AT Ic = 10MA - Ib = 1 MA

VOLTAGE - FULL SCALE = 10 VOLTS

| CALIBRATION RESISTOR | | | |
|---|---|---|---|
| 500 OHMS | 0507 ' | 0507 ' | 0507 ' |
| 50 OHMS' | 0507 ' | 0507 ' | 0507 ' |

| | | |
|---|---|---|
| TEST CONDUCTED FOR: NASA, OFFICE OF ADVANCED RESEARCH AND TECHNOLOGY | | DATE: 4-29-65 |
| TEST: POST-100 HR. MEAS. | SAMPLE NUMBER: NOTED | BAROM. PRESS. IN. HG. |
| PART NAME & NUMBER: DTL NAND/NOR GATE - SE 102 K | TEST MEDIUM: AIR | WET BULB TEMP. 61°F |
| MANUFACTURER: C | TEST TEMP. 74° C. ☐ F. ☒ | DRY BULB TEMP. 74°F |
| ENGINEER / TECHNICIAN | INSPECTOR | |
| REF. SPEC. | DATA SHEET NUMBER | |

JOB NUMBER A0-138-AE PAGE OF TEST REPORT NO. TR1-1188

2011
4/65

GENERAL PRECISION, INC.
LIBRASCOPE GROUP

# ENVIRONMENTAL LABORATORY DATA SHEET

GROUP II- LIFE TEST GROUP

PARAMETER: OUTPUT SATURATION VOLTAGE AT Ic= 10 MA Ib = 1 MA

VOLTAGE - FULL SCALE = 10 VOLTS

| SAMPLE NUMBER | V3 |
|---|---|
| 6 | 0205 ' |
| 7 | 0212 ' |
| 8 | 0209 ' |
| 9 | 0229 ' |
| 10 | 0224 ' |
| 11 | 0205 ' |
| 12 | 0221 ' |
| 13 | 0211 ' |
| 14 | 0199 ' |
| 15 | 0218 ' |
| 16 | 0219 ' |
| 17 | 0201 ' |
| 18 | 0209 ' |
| 19 | 0204 ' |
| 20 | 0207 ' |
| 21 | 0245 ' |
| 22 | 0207 ' |
| 23 | 0215 ' |
| 24 | 0220 ' |
| 25' | 0222 ' |

| | | |
|---|---|---|
| TEST CONDUCTED FOR: NASA, OFFICE OF ADVANCED RESEARCH AND TECHNOLOGY | | DATE: 4-24-65 |
| TEST: POST - 100 HR. MEAS. | SAMPLE NUMBER: NOTED | BAROM. PRESS. IN. HG. |
| PART NAME & NUMBER: DTL NAND/NOR GATE - SE102K | TEST MEDIUM: AIR | WET BULB TEMP. 61°F |
| MANUFACTURER: C | TEST TEMP. 74° C. ☐ F. ☒ | DRY BULB TEMP. 74°F |
| ENGINEER | TECHNICIAN | INSPECTOR |
| REF. SPEC. | | DATA SHEET NUMBER |

JOB NUMBER Ao-138-AE PAGE OF TEST REPORT NO. TR1-1188

2011
4/65

GENERAL PRECISION, INC.
LIBRASCOPE GROUP

# ENVIRONMENTAL LABORATORY DATA SHEET

GROUP I - INSTRUMENTATION CONTROL

PARAMETER: OUTPUT SATURATION VOLTAGE AT Ic = 10 MA - Ib = 1 MA

CALIBRATION CHECK AT Ic = 10MA - Ib = 1 MA

| CALIBRATION RESISTOR | VOLTAGE - FULL SCALE = 10 VOLTS | | |
|---|---|---|---|
| 500 OHMS | 0502 ' | 0502 ' | 0502 ' |
| 50 OHMS | 0500 ' | 0500 ' | 0501 ' |

| SAMPLE NUMBER | VOLTAGE - FULL SCALE = 10 VOLTS |
|---|---|
| | V3 |
| 1 | |
| 2 | 0206 ' |
| 3 | 0211 ' |
| 4 | 0200 ' |
| 5' | 0218 ' |
| | 0201 ' |

| | | |
|---|---|---|
| TEST CONDUCTED FOR: NASA, OFFICE OF ADVANCED RESEARCH AND TECHNOLOGY | | DATE: 4-24-65 |
| TEST: POST-100 HR. MEAS. | SAMPLE NUMBER: NOTED | BAROM. PRESS. IN. HG. |
| PART NAME & NUMBER: DTL NAND/NOR GATE - SE102K | TEST MEDIUM: AIR | WET BULB TEMP. 61°F |
| MANUFACTURER: C | TEST TEMP. 74° C. ☐ F. ☒ | DRY BULB TEMP. 74°F |
| ENGINEER / TECHNICIAN | INSPECTOR | |
| REF. SPEC. | DATA SHEET NUMBER | |

JOB NUMBER Ao-138-AE PAGE OF TEST REPORT NO. TR1-1188

2011
4/65

GENERAL PRECISION, INC.
LIBRASCOPE GROUP

# ENVIRONMENTAL LABORATORY DATA SHEET

GROUP II - LIFE TEST GROUP

PARAMETER: DIODE FORWARD CURRENT WITH V6 = 4 VOLTS

| SAMPLE NUMBER | If7 | If8 | If9 | |
|---|---|---|---|---|
| | CURRENT - FULL SCALE = 10 MA | | | |
| 26 | 1735 ' | 1733 ' | 1752 ' | 1742 ' |
| 27 | 1730 ' | 1749 ' | 1725 ' | |
| 28 | 1700 ' | 1710 ' | 1643 ' | |
| 29 | 1719 ' | 1719 ' | 1719 ' | |
| 30 | 1739 ' | 1746 ' | 1719 ' | |
| 31 | 1634 ' | 1615 ' | 1620 ' | |
| 32 | 1740 ' | 1760 ' | 1739 ' | |
| 33 | 1762 ' | 1758 ' | 1739 ' | |
| 34 | 1732 ' | 1729 ' | 1729 ' | |
| 35 | 1721 ' | 1722 ' | 1732 ' | |
| 36 | 1622 ' | 1620 ' | 1607 ' | |
| 37 | 1764 ' | 1743 ' | 1750 ' | |
| 38 | 1622 ' | 1619 ' | 1599 ' | |
| 39 | 1700 ' | 1700 ' | 1677 ' | |
| 40 | 1732 ' | 1737 ' | 1724 ' | |
| 41 | 1729 ' | 1729 ' | 1739 ' | |
| 42 | 1726 ' | 1736 ' | 1732 ' | |
| 43 | 1742 ' | 1750 ' | 1742 ' | |
| 44 | 1625 ' | 1630 ' | 1609 ' | |
| 45 | 1789 ' | 1792 ' | 1790 ' | |

CALIBRATION CHECK

| CALIBRATION RESISTOR | | | |
|---|---|---|---|
| | CURRENT - FULL SCALE = 10 MA | | |
| 2000 OHMS | 1989 ' | 1992 ' | 1969 ' |
| 1000 OHMS' | 4000 ' | 3994 ' | 3975 ' |

| | | |
|---|---|---|
| TEST CONDUCTED FOR: NASA, OFFICE OF ADVANCED RESEARCH AND TECHNOLOGY | | DATE: 4-24-65 |
| TEST: POST - 100 HR. MEAS. | SAMPLE NUMBER: NOTED | BAROM. PRESS. IN. HG. |
| PART NAME & NUMBER: DTL NAND/NOR GATE - SE 102 K | TEST MEDIUM: AIR | WET BULB TEMP. 61°F |
| MANUFACTURER: C | TEST TEMP. 74° C. ☐ F. ☒ | DRY BULB TEMP. 74°F |
| ENGINEER / TECHNICIAN | INSPECTOR | |
| REF. SPEC. | DATA SHEET NUMBER | |

JOB NUMBER A0-138-AE PAGE OF TEST REPORT NO. TR1-1188

2011
4/65

GENERAL PRECISION, INC.
LIBRASCOPE GROUP

# ENVIRONMENTAL LABORATORY DATA SHEET

GROUP II - LIFE TEST GROUP

PARAMETER: DIODE FORWARD CURRENT WITH V6 - 4 VOLTS

| SAMPLE NUMBER | If7 | If8 | If9 |
|---|---|---|---|
| | CURRENT - FULL SCALE = 10 MA | | |
| 6 | 1616 ' | 1595 ' | 1599 ' |
| 7 | 1732 ' | 1729 ' | 1732 ' |
| 8 | 1720 ' | 1700 ' | 1709 ' |
| 9 | 1642 ' | 1649 ' | 1632 ' |
| 10 | 1720 ' | 1722 ' | 1738 ' |
| 11 | 1659 ' | 1659 ' | 1669 ' |
| 12 | 1718 ' | 1699 ' | 1715 ' |
| 13 | 1689 ' | 1699 ' | 1699 ' |
| 14 | 1759 ' | 1766 ' | 1750 ' |
| 15 | 1720 ' | 1735 ' | 1729 ' |
| 16 | 1680 ' | 1717 ' | 1719 ' |
| 17 | 1671 ' | 1692 ' | 1686 ' |
| 18 | 1789 ' | 1799 ' | 1791 ' |
| 19 | 1732 ' | 1720 ' | 1719 ' |
| 20 | 1752 ' | 1748 ' | 1742 ' |
| 21 | 1620 ' | 1625 ' | 1659 ' |
| 22 | 1661 ' | 1690 ' | 1689 ' |
| 23 | 1742 ' | 1729 ' | 1720 ' |
| 24 | 1629 ' | 1630 ' | 1620 ' |
| 25' | 1672 ' | 1689 ' | 1679 ' |

| | | |
|---|---|---|
| TEST CONDUCTED FOR: NASA, OFFICE OF ADVANCED RESEARCH AND TECHNOLOGY | | DATE: 4-24-65 |
| TEST: POST - 100 HR. MEAS. | SAMPLE NUMBER: NOTED | BAROM. PRESS. IN. HG. |
| PART NAME & NUMBER: DTL NAND/NOR GATE - SE102K | TEST MEDIUM: AIR | WET BULB TEMP. 61°F |
| MANUFACTURER: C | TEST TEMP. 74° C. ☐ F. ☒ | DRY BULB TEMP. 74°F |
| ENGINEER | TECHNICIAN | INSPECTOR |
| REF. SPEC. | | DATA SHEET NUMBER |

JOB NUMBER AO-138-AE PAGE OF TEST REPORT NO. TR1-1188

2011
4/65

GENERAL PRECISION, INC.
LIBRASCOPE GROUP

# ENVIRONMENTAL LABORATORY DATA SHEET

GROUP I - INSTRUMENTATION CONTROL

CALIBRATION: CURRENT FULL SCALE = 10 MA
RESISTOR

| | | | |
|---|---|---|---|
| 2000 OHMS | 1989 ' | 1980 ' | 1985 ' |
| 1000 OHMS | 3986 ' | 3999 ' | 3985 ' |

PARAMETER: DIODE FORWARD CURRENT WITH V10 = 4 VOLTS

| SAMPLE NUMBER | CURRENT FULL SCALE = 10 MA If7 | If8 | If9 | | | |
|---|---|---|---|---|---|---|
| 1 | 1739 ' | 1739 ' | 1722 ' | | | |
| 2 | 1682 ' | 1669 ' | 1640 ' | 1769 ' | 1788 ' | 1772 ' |
| 3 | 1763 ' | 1780 ' | 1760 ' | | | |
| 4 | 1677 ' | 1652 ' | 1653 ' | | | |
| 5' | 1684 ' | 1669 ' | 1680 ' | | | |

| | | |
|---|---|---|
| TEST CONDUCTED FOR: NASA, OFFICE OF ADVANCED RESEARCH AND TECHNOLOGY | | DATE: 4-24-65 |
| TEST: POST - 100 HR. MEAS. | SAMPLE NUMBER: NOTED | BAROM. PRESS. IN. HG. |
| PART NAME & NUMBER: DTL NAND/NOR GATE - SE102K | TEST MEDIUM: AIR | WET BULB TEMP.: 61°F |
| MANUFACTURER: C | TEST TEMP.: 74° C. ☐ F. ☒ | DRY BULB TEMP.: 74°F |
| ENGINEER / TECHNICIAN | INSPECTOR | |
| REF. SPEC. | DATA SHEET NUMBER | |

JOB NUMBER A0-138-AE PAGE OF TEST REPORT NO. TR1-1188

2011
4/65

GENERAL PRECISION, INC.
LIBRASCOPE GROUP

# ENVIRONMENTAL LABORATORY DATA SHEET

GROUP I - INSTRUMENTATION CONTROL

PARAMETER: RESISTANCE MEASUREMENTS AT 1 MA

CALIBRATION CHECK AT 1 MA

| CALIBRATION RESISTOR | VOLTAGE - FULL SCALE = 100 VOLTS | | |
|---|---|---|---|
| 2000 OHMS | 0202 ' | 0202 ' | 0203 ' |
| 1000 OHMS | 0099 ' | 0099 ' | 0098 ' |
| 500 OHMS | | | |

| SAMPLE NUMBER | RESISTANCE - FULL SCALE = 100K OHMS | | |
|---|---|---|---|
| | R1 | R2 | R3 |
| 1 | 0198 ' | 0185 ' | 2122 ' |
| 2 | 0202 ' | 0191 ' | 2193 ' |
| 3 | 0194 ' | 0182 ' | 2111 ' |
| 4 | 0216 ' | 0193 ' | 2098 ' |
| 5' | 0205 ' | 0192 ' | 2103 ' |

| | | |
|---|---|---|
| TEST CONDUCTED FOR: NASA, OFFICE OF ADVANCED RESEARCH AND TECHNOLOGY | | DATE: 4-24-65 |
| TEST: POST-100HR. MEAS | SAMPLE NUMBER: NOTED | BAROM. PRESS. IN. HG. |
| PART NAME & NUMBER: DTL NAND/NOR GATE - SE102K | TEST MEDIUM: AIR | WET BULB TEMP. 61°F |
| MANUFACTURER: C | TEST TEMP. 74° C. ☐ F. ☒ | DRY BULB TEMP. 74°F |
| ENGINEER | TECHNICIAN | INSPECTOR |
| REF. SPEC. | | DATA SHEET NUMBER |

JOB NUMBER Ao-138-AE PAGE OF TEST REPORT NO. TR1-1188

2011
4/65

GENERAL PRECISION, INC.
LIBRASCOPE GROUP

# ENVIRONMENTAL LABORATORY DATA SHEET

GROUP I - INSTRUMENTATION CONTROL

PARAMETER: LEAKAGE CURRENT AT 4 VOLTS
CALIBRATION CHECK WITH 10 MEG

| CALIBRATION VOLTAGE | CURRENT - FULL SCALE = 100 NA | | |
|---|---|---|---|
| 1.0 V | 0994 ' | 0999 ' | 0999 ' |
| 0.5 V | 0494 ' | 0495 ' | 0495 ' |

| SAMPLE NUMBER | LEAKAGE CURRENT - FULL SCALE - 100 NA | | | | |
|---|---|---|---|---|---|
| | I7 | I8 | I9 | ICBO | I3 |
| 1 | 0030 ' | 0029 ' | 0030 ' | 0134 ' | 0140 ' |
| 2 | 0017 ' | 0020 ' | 0014 ' | 0154 ' | 0158 ' |
| 3 | 0057 ' | 0104 ' | 0055 ' | 0102 ' | 0105 ' |
| 4 | 0010 ' | 0020 ' | 0008 ' | 0097 ' | 0100 ' |
| 5' | 0010 ' | 0010 ' | 0009 ' | 0093 ' | 0096 ' |

| | | | |
|---|---|---|---|
| TEST CONDUCTED FOR: NASA, OFFICE OF ADVANCED RESEARCH AND TECHNOLOGY | | | DATE: 4-24-65 |
| TEST: POST-100HR. MEAS. | SAMPLE NUMBER: NOTED | | BAROM. PRESS. IN. HG. |
| PART NAME & NUMBER: DTL NAND/NOR GATE-SE102K | TEST MEDIUM: AIR | | WET BULB TEMP. 61°F |
| MANUFACTURER: C | TEST TEMP. 74° | C. ☐ F. ☒ | DRY BULB TEMP. 74°F |
| ENGINEER | TECHNICIAN | INSPECTOR | |
| REF. SPEC. | | DATA SHEET NUMBER | |

JOB NUMBER A0-138-AE PAGE OF TEST REPORT NO. TR1-1188

2011
4/65

GENERAL PRECISION, INC.
LIBRASCOPE GROUP

# ENVIRONMENTAL LABORATORY DATA SHEET

GROUP II - LIFE TEST GROUP

PARAMETER: RESISTANCE MEASUREMENTS AT 1 MA

RESISTANCE - FULL SCALE = 1+00KOHMS

| SAMPLE NUMBER | R1 | R2 | R3 | | | |
|---|---|---|---|---|---|---|
| 26 | 0195 ' | 0184 ' | 2130 ' | | | |
| 27 | 0195 ' | 0184 ' | 2156 ' | | | |
| 28 | 0198 ' | 0187 ' | 2166 ' | | | |
| 29 | 0202 ' | 0188 ' | 2154 ' | | | |
| 30 | 0198 ' | 0186 ' | 2149 ' | | | |
| 31 | 0212 ' | 0197 ' | 2091 ' | | | |
| 32 | 0195 ' | 0184 ' | 2131 ' | | | |
| 33 | 0196 ' | 0184 ' | 2146 ' | | | |
| 34 | 0198 ' | 0185 ' | 2150 ' | | | |
| 35 | 0200 ' | 0187 ' | 2154 ' | 0211 ' | 0199 ' | 2126 ' |
| 36 | 0210 ' | 0200 ' | 2127 ' | | | |
| 37 | 0193 ' | 0184 ' | 2140 ' | | | |
| 38 | 0212 ' | 0198 ' | 1390 ' | | | |
| 39 | 0202 ' | 0191 ' | 2188 ' | | | |
| 40 | 0208 ' | 0186 ' | 2163 ' | | | |
| 41 | 0196 ' | 0185 ' | 2160 ' | | | |
| 42 | 0196 ' | 0185 ' | 2157 ' | | | |
| 43 | 0198 ' | 0185 ' | 2140 ' | | | |
| 44 | 0211 ' | 0197 ' | 2187 ' | | | |
| 45 | 0194 ' | 0181 ' | 2108 ' | | | |

CALIBRATION CHECK

VOLTAGE - FULL SCALE = 10 0 VOLTS

| CALIBRATION RESISTOR | | | |
|---|---|---|---|
| 2000 OHMS | 0202 ' | 0203 ' | 0202 ' |
| 1000 OHMS | 0098 ' | 0099 ' | 0098 ' |
| 500 OHMS' | | | |

| | | |
|---|---|---|
| TEST CONDUCTED FOR: NASA, OFFICE OF ADVANCED RESEARCH AND TECHNOLOGY | | DATE: 4-24-65 |
| TEST: POST-100 HR. MEAS. | SAMPLE NUMBER: NOTED | BAROM. PRESS. IN. HG. |
| PART NAME & NUMBER: DTL NAND/NOR GATE - SE102K | TEST MEDIUM: AIR | WET BULB TEMP. 61°F |
| MANUFACTURER: C | TEST TEMP. 74° C. ☐ F. ☒ | DRY BULB TEMP. 74°F |
| ENGINEER / TECHNICIAN | INSPECTOR | |
| REF. SPEC. | DATA SHEET NUMBER | |

JOB NUMBER AO-138-AE PAGE OF TEST REPORT NO. TR1-1188

2011
4/65

GENERAL PRECISION, INC.
LIBRASCOPE GROUP

# ENVIRONMENTAL LABORATORY DATA SHEET

GROUP II - LIFE TEST GROUP

PARAMETER: RESISTANCE MEASUREMENTS AT 1 MA

| SAMPLE NUMBER | RESISTANCE - FULL SCALE = 100K OHMS R1 | R2 | R3 | | | |
|---|---|---|---|---|---|---|
| 6 | 0214 ' | 0201 ' | 2118 ' | | | |
| 7 | 0196 ' | 0186 ' | 2156 ' | | | |
| 8 | 0201 ' | 0188 ' | 2167 ' | | | |
| 9 | 0205 ' | 0194 ' | 2052 ' | | | |
| 10 | 0198 ' | 0185 ' | 2175 ' | | | |
| 11 | 0205 ' | 0193 ' | 2160 ' | | | |
| 12 | 0200 ' | 0201 ' | 2216 ' | 0203 ' | 0190 ' | 2167 ' |
| 13 | 0204 ' | 0190 ' | 2168 ' | | | |
| 14 | 0201 ' | 0182 ' | 2119 ' | | | |
| 15 | 0202 ' | 0186 ' | 2174 ' | | | |
| 16 | 0200 ' | 0189 ' | 2190 ' | | | |
| 17 | 0202 ' | 0191 ' | 2159 ' | | | |
| 18 | 0189 ' | 0179 ' | 2123 ' | | | |
| 19 | 0200 ' | 0188 ' | 2158 ' | | | |
| 20 | 0199 ' | 0185 ' | 2138 ' | | | |
| 21 | 0208 ' | 0197 ' | 2222 ' | | | |
| 22 | 0206 ' | 0193 ' | 2177 ' | | | |
| 23 | 0198 ' | 0187 ' | 2173 ' | | | |
| 24 | 0214 ' | 0197 ' | 2245 ' | | | |
| 25' | 0204 ' | 0192 ' | 2180 ' | | | |

| | | |
|---|---|---|
| TEST CONDUCTED FOR: NASA, OFFICE OF ADVANCED RESEARCH AND TECHNOLOGY | | DATE: 4-24-65 |
| TEST: POST - 100 HR. MEAS. | SAMPLE NUMBER: NOTED | BAROM. PRESS. IN. HG. |
| PART NAME & NUMBER: DTL NAND/NOR GATE - SE102K | TEST MEDIUM: AIR | WET BULB TEMP. 61°F |
| MANUFACTURER: C | TEST TEMP. 74° C. ☐ F. ☒ | DRY BULB TEMP. 74°F |
| ENGINEER / TECHNICIAN | INSPECTOR | |
| REF. SPEC. | DATA SHEET NUMBER | |

JOB NUMBER A0-138-AE PAGE OF TEST REPORT NO. TR1-1188

2011
4/65

GENERAL PRECISION, INC.
LIBRASCOPE GROUP

# ENVIRONMENTAL LABORATORY DATA SHEET

GROUP II - LIFE TEST GROUP

PARAMETER: LEAKAGE CURRENT AT 4 VOLTS

| SAMPLE NUMBER | CURRENT - FULL SCALE = 100 NA I7 | I8 | I9 | ICBO | I3 | |
|---|---|---|---|---|---|---|
| 26 | 0020 ' | 0019 ' | 0017 ' | 0135 ' | 0135 ' | |
| 27 | 0011 ' | 0012 ' | 0011 ' | 0155 ' | 0158 ' | |
| 28 | 0011 ' | 0011 ' | 0012 ' | 0150 ' | 0153 ' | |
| 29 | 0014 ' | 0002 ' | 0010 ' | 0144 ' | 0148 ' | |
| 30 | 0013 ' | 0014 ' | 0016 ' | 0131 ' | 0140 ' | |
| 31 | 0005 ' | 0007 ' | 0019 ' | 0082 ' | 0087 ' | |
| 32 | 0012 ' | 0013 ' | 0011 ' | 0151 ' | 0154 ' | |
| 33 | 0010 ' | 0010 ' | 0009 ' | 0128 ' | 0133 ' | |
| 34 | 0070 ' | 0067 ' | 0067 ' | 0133 ' | 0140 ' | |
| 35 | 0011 ' | 0012 ' | 0012 ' | 0138 ' | 0143 ' | |
| 36 | 0008 ' | 0009 ' | 0005 ' | 0082 ' | 0087 ' | |
| 37 | 0017 ' | 0015 ' | 0014 ' | 0132 ' | 0135 ' | |
| 38 | 0008 ' | 0009 ' | 0009 ' | 0080 ' | 0082 ' | |
| 39 | 0013 ' | 0010 ' | 0011 ' | 0135 ' | 0141 ' | |
| 40 | 0081 ' | 0080 ' | 0081 ' | 0145 ' | 0150 ' | |
| 41 | 0015 ' | 0016 ' | 0015 ' | 0137 ' | 0139 ' | + |
| 42 | 0011 ' | 0010 ' | 0010 ' | 0150 ' | 0155 ' | |
| 43 | 0012 ' | 0010 ' | 0009 ' | 0120 ' | 0128 ' | |
| 44 | 0012 ' | 0009 ' | 0009 ' | 0134 ' | 0136 ' | |
| 45 | 0013 ' | 0011 ' | 0012 ' | 0138 ' | 0144 ' | |

CALIBRATION CHECK - 100 NA

| CALIBRATION VOLTAGE | | | |
|---|---|---|---|
| 1.0 V | 0996 ' | 0996 ' | 0998 ' |
| 0.5 V | 0491 ' | 0495 ' | 0491 ' |

| | | |
|---|---|---|
| TEST CONDUCTED FOR: NASA, OFFICE OF ADVANCED RESEARCH AND DEVELOPMENT | | DATE: 4-24-65 |
| TEST: POST-100 HR. MEAS. | SAMPLE NUMBER: NOTED | BAROM. PRESS. IN. HG. |
| PART NAME & NUMBER: DTL NAND/NOR GATE - SE102K | TEST MEDIUM: AIR | WET BULB TEMP. 61°F |
| MANUFACTURER: C | TEST TEMP. 74° C. ☐ F. ☒ | DRY BULB TEMP. 74°F |
| ENGINEER | TECHNICIAN | INSPECTOR |
| REF. SPEC. | | DATA SHEET NUMBER |

JOB NUMBER Ao-138-AE PAGE OF TEST REPORT NO. TR1-1188

2011
4/65

GENERAL PRECISION, INC.
LIBRASCOPE GROUP

# ENVIRONMENTAL LABORATORY DATA SHEET

GROUP II - LIFE TEST GROUP

PARAMETER: BREAKDOWN VOLTAGE AT 1 UA

| SAMPLE NUMBER | BV7 | BV8 | BV9 | BVCBO |
|---|---|---|---|---|
| | VOLTAGE - FULL SCALE = 100 VOLTS | | | |
| 6 | 1815 ' | 1820 ' | 1833 ' | 1808 ' |
| 7 | 1898 ' | 1899 ' | 1897 ' | 1867 ' |
| 8 | 1893 ' | 1896 ' | 1880 ' | 1799 ' |
| 9 | 1957 ' | 1957 ' | 1956 ' | 1922 ' |
| 10 | 1958 ' | 1952 ' | 1954 ' | 1920 ' |
| 11 | 1877 ' | 1880 ' | 1883 ' | 1852 ' |
| 12 | 1931 ' | 1925 ' | 1925 ' | 1852 ' |
| 13 | 1892 ' | 1895 ' | 1898 ' | 1864 ' |
| 14 | 1860 ' | 1863 ' | 1858 ' | 1839 ' |
| 15 | 1894 ' | 1897 ' | 1895 ' | 1870 ' |
| 16 | 1910 ' | 1918 ' | 1919 ' | 1422 ' |
| 17 | 1893 ' | 1894 ' | 1893 ' | 1865 ' |
| 18 | 1911 ' | 1910 ' | 1906 ' | 1878 ' |
| 19 | 1887 ' | 1890 ' | 1890 ' | 1867 ' |
| 20 | 1886 ' | 1885 ' | 1889 ' | 1859 ' |
| 21 | 1921 ' | 1923 ' | 1924 ' | 1900 ' |
| 22 | 1895 ' | 1900 ' | 1902 ' | 1874 ' |
| 23 | 1910 ' | 1913 ' | 1912 ' | 1879 ' |
| 24 | 1915 ' | 1923 ' | 1919 ' | 1817 ' |
| 25' | 1892 ' | 1889 ' | 1895 ' | 1870 ' |

| | | |
|---|---|---|
| TEST CONDUCTED FOR: NASA, OFFICE OF ADVANCED RESEARCH AND TECHNOLOGY | | DATE: 4-24-65 |
| TEST: POST - 100 HR. MEAS | SAMPLE NUMBER: NOTED | BAROM. PRESS. IN. HG. |
| PART NAME & NUMBER: DTL NAND/NOR GATE - SE102K | TEST MEDIUM: AIR | WET BULB TEMP. 61° F |
| MANUFACTURER: C | TEST TEMP. 74° C. ☐ F. ☒ | DRY BULB TEMP. 74° F |
| ENGINEER / TECHNICIAN | INSPECTOR | |
| REF. SPEC. | DATA SHEET NUMBER | |

JOB NUMBER AO-138-AE PAGE OF TEST REPORT NO. TR1-1188

2011
4/65

GENERAL PRECISION, INC.
LIBRASCOPE GROUP

# ENVIRONMENTAL LABORATORY DATA SHEET

GROUP II - LIFE TEST GROUP

PARAMETER: BREAKDOWN VOLTAGE AT 1 UA

| SAMPLE NUMBER | VOLTAGE - FULL SCALE = 100 VOLTS BV7 | BV8 | BV9 | BVCBO |
|---|---|---|---|---|
| 26 | 1715 ' | 1882 ' | 1885 ' | 1848 ' |
| 27 | 1920 ' | 1920 ' | 1920 ' | 1888 ' |
| 28 | 1901 ' | 1901 ' | 1901 ' | 1777 ' |
| 29 | 1892 ' | 1889 ' | 1898 ' | 1862 ' |
| 30 | 1885 ' | 1882 ' | 1873 ' | 1851 ' |
| 31 | 1808 ' | 1810 ' | 1808 ' | 1801 ' |
| 32 | 1921 ' | 1926 ' | 1927 ' | 1886 ' |
| 33 | 1882 ' | 1879 ' | 1877 ' | 1123 ' |
| 34 | 1886 ' | 1806 ' | 1889 ' | 1852 ' |
| 35 | 1887 ' | 1901 ' | 1890 ' | 1859 ' |
| 36 | 1824 ' | 1819 ' | 1822 ' | 1819 ' |
| 37 | 1885 ' | 1881 ' | 1884 ' | 1858 ' |
| 38 | 1808 ' | 1803 ' | 1815 ' | 1809 ' |
| 39 | 1908 ' | 1911 ' | 1912 ' | 1879 ' |
| 40 | 1906 ' | 1900 ' | 1901 ' | 1635 ' |
| 41 | 1909 ' | 1915 ' | 1911 ' | 1881 ' |
| 42 | 1927 ' | 1933 ' | 1934 ' | 1169 ' |
| 43 | 1870 ' | 1872 ' | 1878 ' | 1853 ' |
| 44 | 1884 ' | 1894 ' | 1894 ' | 1869 ' |
| 45 | 1871 ' | 1869 ' | 1864 ' | 1659 ' |

CALIBRATION CHECK

| CALIBRATION RESISTOR | VOLTAGE - FULL SCALE= 100 VOLTS | | |
|---|---|---|---|
| 20 MEG | 2001 ' | 2002 ' | 2002 ' |
| 10 MEG | 0997 ' | 0998 ' | 0997 ' |
| 5 MEG' | 0497 ' | 0497 ' | 0497 ' |

| | | |
|---|---|---|
| TEST CONDUCTED FOR: NASA, OFFICE OF ADVANCED RESEARCH AND DEVELOPMENT | | DATE: 4-24-65 |
| TEST: POST - 100 HR. MEAS. | SAMPLE NUMBER: NOTED | BAROM. PRESS. IN. HG. |
| PART NAME & NUMBER: DTL NAND/NOR GATE - SE102K | TEST MEDIUM: AIR | WET BULB TEMP. 61°F |
| MANUFACTURER: C | TEST TEMP. 74° C. ☐ F. ☑ | DRY BULB TEMP. 74°F |
| ENGINEER / TECHNICIAN | INSPECTOR | |
| REF. SPEC. | DATA SHEET NUMBER | |

JOB NUMBER AO-138-AE PAGE OF TEST REPORT NO. TR1-1188

2011
4/65

GENERAL PRECISION, INC.
LIBRASCOPE GROUP

# ENVIRONMENTAL LABORATORY DATA SHEET

GROUP II - LIFE TEST GROUP

PARAMETER: LEAKAGE CURRENT AT 4 VOLTS

| SAMPLE NUMBER | CURRENT- FULL SCALE - 100 NA I7 | I8 | I9 | ICBO | I3 |
|---|---|---|---|---|---|
| 6 | 0010 ' | 0008 ' | 0008 ' | 0087 ' | 0087 ' |
| 7 | 0013 ' | 0014 ' | 0014 ' | 0141 ' | 0146 ' |
| 8 | 0016 ' | 0014 ' | 0014 ' | 0150 ' | 0152 ' |
| 9 | 0010 ' | 0012 ' | 0011 ' | 0155 ' | 0168 ' |
| 10 | 0012 ' | 0012 ' | 0014 ' | 0156 ' | 0161 ' |
| 11 | 0011 ' | 0011 ' | 0011 ' | 0136 ' | 0138 ' |
| 12 | 0013 ' | 0012 ' | 0013 ' | 0140 ' | 0146 ' |
| 13 | 0012 ' | 0015 ' | 0014 ' | 0148 ' | 0152 ' |
| 14 | 0016 ' | 0015 ' | 0013 ' | 0142 ' | 0150 ' |
| 15 | 0010 ' | 0010 ' | 0010 ' | 0132 ' | 0138 ' |
| 16 | 0012 ' | 0010 ' | 0013 ' | 0235 ' | 0217 ' |
| 17 | 0010 ' | 0012 ' | 0010 ' | 0137 ' | 0141 ' |
| 18 | 0011 ' | 0013 ' | 0010 ' | 0140 ' | 0145 ' |
| 19 | 0011 ' | 0011 ' | 0011 ' | 0134 ' | 0137 ' |
| 20 | 0012 ' | 0014 ' | 0013 ' | 0133 ' | 0136 ' |
| 21 | 0012 ' | 0010 ' | 0012 ' | 0148 ' | 0153 ' |
| 22 | 0010 ' | 0009 ' | 0010 ' | 0128 ' | 0132 ' |
| 23 | 0011 ' | 0012 ' | 0009 ' | 0127 ' | 0133 ' |
| 24 | 0009 ' | 0012 ' | 0013 ' | 0142 ' | 0145 ' |
| 25 | 0017 ' | 0018 ' | 0020 ' | 0143 ' | 0148 ' |

| | | |
|---|---|---|
| TEST CONDUCTED FOR: NASA, OFFICE OF ADVANCED RESEARCH AND TECHNOLOGY | | DATE: 4-24-65 |
| TEST: POST-100 HR. MEAS. | SAMPLE NUMBER: NOTED | BAROM. PRESS. IN. HG. |
| PART NAME & NUMBER: DTL NAND/NOR GATE -SE102K | TEST MEDIUM: AIR | WET BULB TEMP. 61° F |
| MANUFACTURER: C | TEST TEMP. 74° C. ☐ F. ☒ | DRY BULB TEMP. 74° F |
| ENGINEER / TECHNICIAN | INSPECTOR | |
| REF. SPEC. | DATA SHEET NUMBER | |

JOB NUMBER A0-138-AE PAGE OF TEST REPORT NO. TR1-1188

2011
4/65

GENERAL PRECISION, INC.
LIBRASCOPE GROUP

# ENVIRONMENTAL LABORATORY DATA SHEET

## GROUP I - INSTRUMENTATION CONTROL

CALIBRATION CHECK - BREAKDOWN VOLTAGE AT 1UA

| CALIBRATION RESISTOR | VOLTAGE - FULL SCALE = 100 VOLTS | | |
|---|---|---|---|
| 20 MEG | 2003 ' | 2002 ' | 2002 ' |
| 10 MEG | 0998 ' | 0997 ' | 0998 ' |
| 5 MEG | 0497 ' | 0497 ' | 0497 ' |

| SAMPLE NUMBER | VOLTAGE - FULL SCALE = 100 VOLTS | | | |
|---|---|---|---|---|
| | BV7 | BV8 | BV9 | BVCBO |
| 1 | 1825 ' | 1721 ' | 1798 ' | 1806 ' |
| 2 | 1911 ' | 1909 ' | 1918 ' | 1894 ' |
| 3 | 1846 ' | 1342 ' | 1835 ' | 1819 ' |
| 4 | 1783 ' | 1798 ' | 1798 ' | 1793 ' |
| 5 | 1815 ' | 1826 ' | 1822 ' | 1810 ' |

| | | |
|---|---|---|
| TEST CONDUCTED FOR: NASA, OFFICE OF ADVANCED RESEARCH AND TECHNOLOGY | | DATE: 4-24-65 |
| TEST: POST-100 HR. MEAS. | SAMPLE NUMBER: NOTED | BAROM. PRESS. IN. HG. |
| PART NAME & NUMBER: DTL NAND/NOR GATE - SE 102 K | TEST MEDIUM: AIR | WET BULB TEMP. 61° F |
| MANUFACTURER: C | TEST TEMP. 74° C. ☐ F. ☒ | DRY BULB TEMP. 74° F |
| ENGINEER / TECHNICIAN | INSPECTOR | |
| REF. SPEC. | DATA SHEET NUMBER | |

JOB NUMBER A0-138-AE PAGE OF TEST REPORT NO. TR1-1188

2011
4/65

GENERAL PRECISION, INC.
LIBRASCOPE GROUP

# ENVIRONMENTAL LABORATORY DATA SHEET

GROUP I - INSTRUMENTATION CONTROL

PARAMETER: BREAKDOWN VOLTAGE AT 1UA

CALIBRATION CHECK - BREAKDOWN VOLTAGE AT 1UA

| CALIBRATION RESISTOR | | VOLTAGE - FULL SCALE = 100 VOLTS | |
|---|---|---|---|
| 20 MEG | 2002 ' | 2000 ' | 2000 ' |
| 10 MEG | 0997 ' | 0997 ' | 0997 ' |
| 5 MEG | 0497 ' | 0497 ' | 0497 ' |

| SAMPLE NUMBER | BV7 | VOLTAGE - FULL SCALE = 100 VOLTS BV8 | BV9 |
|---|---|---|---|
| 1 | 1824 ' | 1721 ' | 1796 ' |
| 2 | 1913 ' | 1909 ' | 1915 ' |
| 3 | 1847 ' | 1352 ' | 1834 ' |
| 4 | 1783 ' | 1798 ' | 1798 ' |
| 5' | 1815 ' | 1826 ' | 1822 ' |

| | | |
|---|---|---|
| TEST CONDUCTED FOR: NASA, OFFICE OF ADVANCED RESEARCH AND TECHNOLOGY | | DATE: 9-28-65 |
| TEST: POST - 360 HR MERS - STEP 1 | SAMPLE NUMBER: NOTED | BAROM. PRESS. IN. HG. |
| PART NAME & NUMBER: DTL NAND/NOR GATE - SE102K | TEST MEDIUM: AIR | WET BULB TEMP. 59°F |
| MANUFACTURER: C | TEST TEMP. 73° C. ☐ F. ☒ | DRY BULB TEMP. 73°F |
| ENGINEER | TECHNICIAN: J. CALLEY | INSPECTOR |
| REF. SPEC. | | DATA SHEET NUMBER |

JOB NUMBER A0-138-AE PAGE OF TEST REPORT NO. TR1-1188

2011
4/65

GENERAL PRECISION, INC.
LIBRASCOPE GROUP

# ENVIRONMENTAL LABORATORY DATA SHEET

GROUP I - INSTRUMENTATION CONTROL

CALIBRATION CHECK - BREAKDOWN VOLTAGE AT 1UA

| CALIBRATION RESISTOR | VOLTAGE - FULL SCALE = 100 VOLTS | | |
|---|---|---|---|
| 20 MEG | 1999 ' | 1997 ' | 1997 ' |
| 10 MEG | 0995 ' | 0996 ' | 0995 ' |
| 5 MEG | 0496 ' | 0496 ' | 0496 ' |

| SAMPLE NUMBER | VOLTAGE - FULL SCALE = 100 VOLTS | | | |
|---|---|---|---|---|
| | BV7 | BV8 | BV9 | BVCBO |
| 1 | | | | |
| 2 | | | | |
| 3 | | | | |
| 4 | | | | |
| 5' | | | | |

| | | |
|---|---|---|
| TEST CONDUCTED FOR: NASA, OFFICE OF ADVANCED RESEARCH AND TECHNOLOGY | | DATE: 4-24-65 |
| TEST: POST-100 HR. MEAS. | SAMPLE NUMBER: NOTED | BAROM. PRESS. IN. HG. |
| PART NAME & NUMBER: DTL NAND/NOR GATE - SE102K | TEST MEDIUM: AIR | WET BULB TEMP.: 61° F |
| MANUFACTURER: C | TEST TEMP.: 74° C. ☐ F. ☒ | DRY BULB TEMP.: 74° F |
| ENGINEER / TECHNICIAN | INSPECTOR | |
| REF. SPEC. | DATA SHEET NUMBER | |

JOB NUMBER AQ-138-AE PAGE OF TEST REPORT NO. TR1-1188

2011
4/65

GENERAL PRECISION, INC.
LIBRASCOPE GROUP

# ENVIRONMENTAL LABORATORY DATA SHEET

GROUP III - TEMP CYCLE STEP STRESS GROUP

PARAMETER: BREAKDOWN VOLTAGE AT 1UA

| SAMPLE NUMBER | BV7 | VOLTAGE - FULL SCALE = 100 VOLTS BV8 | BV9 |
|---|---|---|---|
| 46 | 1898 ' | 1903 ' | 1899 ' |
| 47 | 1965 ' | 1968 ' | 1970 ' |
| 48 | 1925 ' | 1924 ' | 1927 ' |
| 49 | 1927 ' | 1923 ' | 1923 ' |
| 50 | 1971 ' | 1966 ' | 1967 ' |
| 51 | 1887 ' | 1879 ' | 1892 ' |
| 52 | 1913 ' | 1907 ' | 1905 ' |
| 53 | 1931 ' | 1936 ' | 1939 ' |
| 54 | 1919 ' | 1927 ' | 1921 ' |
| 55 | 1899 ' | 1901 ' | 1904 ' |
| 56 | 1898 ' | 1903 ' | 1912 ' |
| 57 | 1930 ' | 1924 ' | 1925 ' |
| 58 | 1879 ' | 1881 ' | 1881 ' |
| 59 | 1888 ' | 1891 ' | 1893 ' |
| 60 | 1884 ' | 1900 ' | 1894 ' |
| 61 | 1928 ' | 1931 ' | 1932 ' |
| 62 | 1965 ' | 1968 ' | 1917 ' |
| 63 | 1892 ' | 1892 ' | 1888 ' |
| 64 | 1890 ' | 1891 ' | 1888 ' |
| 65 | 1924 ' | 1921 ' | 1918 ' |

CALIBRATION CHECK

| CALIBRATION RESISTOR | | VOLTAGE - FULL SCALE = 100 VOLTS | |
|---|---|---|---|
| 20 MEG | 2000 ' | 2000 ' | 2000 ' |
| 10 MEG | 0996 ' | 0997 ' | 0997 ' |
| 5 MEG' | 0496 ' | 0496 ' | 0497 ' |

| | | |
|---|---|---|
| TEST CONDUCTED FOR: NASA, OFFICE OF ADVANCED RESEARCH AND TECHNOLOGY | | DATE: 4-28-65 |
| TEST: POST - 360 HR MEAS - STEP 1 | SAMPLE NUMBER: NOTED | BAROM. PRESS. IN. HG. |
| PART NAME & NUMBER: DTL NAND/NOR GATE - SE102K | TEST MEDIUM: AIR | WET BULB TEMP. 59°F |
| MANUFACTURER: C | TEST TEMP. 73° C. ☐ F. ☒ | DRY BULB TEMP. 73°F |
| ENGINEER | TECHNICIAN: J. CALLEY | INSPECTOR |
| REF. SPEC. | | DATA SHEET NUMBER |

JOB NUMBER A0-138-AE PAGE OF TEST REPORT NO. TR1-1188

2011
4/65

GENERAL PRECISION, INC.
LIBRASCOPE GROUP

# ENVIRONMENTAL LABORATORY DATA SHEET

GROUP I - INSTRUMENTATION CONTROL

PARAMETER: LEAKAGE CURRENT AT 4 VOLTS
CALIBRATION CHECK WITH 10 MEG

| CALIBRATION VOLTAGE | CURRENT - FULL SCALE = 100 NA | | |
|---|---|---|---|
| 1.0 V | 9980 ' | 9920 ' | 9996 ' |
| 0.5 V | 4995 ' | 4979 ' | 5000 ' |

| SAMPLE NUMBER | LEAKAGE CURRENT - FULL SCALE = 100 NA | | | |
|---|---|---|---|---|
| | I7 | I8 | I9 | ICBO |
| 1 | 0399 ' | 0400 ' | 0420 ' | 1905 ' |
| 2 | 0269 ' | 0262 ' | 0270 ' | 2135 ' |
| 3 | 0732 ' | 1249 ' | 0719 ' | 1370 ' |
| 4 | 0160 ' | 0142 ' | 0159 ' | 1350 ' |
| 5 | 0186 ' | 0169 ' | 0170 ' | 1279 ' |

| | | |
|---|---|---|
| TEST CONDUCTED FOR: NASA, OFFICE OF ADVANCED RESEARCH AND TECHNOLOGY | | DATE: 4-28-65 |
| TEST: POST-360 HR MERS - STEP 1 | SAMPLE NUMBER: NOTED | BAROM. PRESS. IN. HG. |
| PART NAME & NUMBER: DTL NAND/NOR GATE - SE102K | TEST MEDIUM: AIR | WET BULB TEMP. 59°F |
| MANUFACTURER: C | TEST TEMP. 73° C. ☐ F. ☒ | DRY BULB TEMP. 73°F |
| ENGINEER | TECHNICIAN: J. CALLEY | INSPECTOR |
| REF. SPEC. | | DATA SHEET NUMBER |

JOB NUMBER AO-138-AE PAGE OF TEST REPORT NO. TR1-1188

2011
4/65

GENERAL PRECISION, INC.
LIBRASCOPE GROUP

# ENVIRONMENTAL LABORATORY DATA SHEET

GROUP III - TEMP CYCLE STEP STRESS GROUP

PARAMETER: LEAKAGE CURRENT AT 4 VOLTS

| SAMPLE NUMBER | CURRENT - FULL SCALE = 100 NA I7 | I8 | I9 | ICBO |
|---|---|---|---|---|
| 46 | 0231 ' | 0216 ' | 0219 ' | 2039 ' |
| 47 | 0202 ' | 0205 ' | 0220 ' | 2119 ' |
| 48 | 0191 ' | 0199 ' | 0212 ' | 1889 ' |
| 49 | 0236 ' | 0229 ' | 0229 ' | 1899 ' |
| 50 | 1419 ' | 1425 ' | 1433 ' | 2089 ' |
| 51 | 0409 ' | 0399 ' | 0416 ' | 1830 ' |
| 52 | 0235 ' | 0232 ' | 0220 ' | 2067 ' |
| 53 | 0194 ' | 0175 ' | 0200 ' | 2039 ' |
| 54 | 0220 ' | 0220 ' | 0227 ' | 2120 ' |
| 55 | 0232 ' | 0236 ' | 0235 ' | 2072 ' |
| 56 | 0231 ' | 0231 ' | 0248 ' | 2095 ' |
| 57 | 0201 ' | 0206 ' | 0226 ' | 2006 ' |
| 58 | 0219 ' | 0209 ' | 0202 ' | 1917 ' |
| 59 | 0226 ' | 0220 ' | 0220 ' | 1869 ' |
| 60 | 0240 ' | 0239 ' | 0230 ' | 1961 ' |
| 61 | 0205 ' | 0220 ' | 0219 ' | 2029 ' |
| 62 | 0529 ' | 0539 ' | 0545 ' | 1575 ' |
| 63 | 0300 ' | 0309 ' | 0300 ' | 1872 ' |
| 64 | 0256 ' | 0239 ' | 0240 ' | 1949 ' |
| 65 | 0222 ' | 0235 ' | 0225 ' | 2050 ' |

CALIBRATION CHECK - 100 NA

| CALIBRATION VOLTAGE | | | |
|---|---|---|---|
| 1.0 V | 9992 ' | 9989 ' | 9982 ' |
| 0.5 V' | 4984 ' | 5000 ' | 4988 ' |

| | | |
|---|---|---|
| TEST CONDUCTED FOR: NASA, OFFICE OF ADVANCED RESEARCH AND TECHNOLOGY | | DATE: 4-28-65 |
| TEST: POST-360 HR MEAS - STEP 1 | SAMPLE NUMBER: NOTED | BAROM. PRESS. IN. HG. |
| PART NAME & NUMBER: DTL NAND/NOR GATE - SE102K | TEST MEDIUM: AIR | WET BULB TEMP. 59°F |
| MANUFACTURER: C | TEST TEMP. 73° C. ☐ F. ☒ | DRY BULB TEMP. 73°F |
| ENGINEER | TECHNICIAN: J. CALLEY | INSPECTOR |
| REF. SPEC. | | DATA SHEET NUMBER |

JOB NUMBER A0-138-AE PAGE OF TEST REPORT NO. TR1-1188

2011
4/65

GENERAL PRECISION, INC.
LIBRASCOPE GROUP

# ENVIRONMENTAL LABORATORY DATA SHEET

GROUP I - INSTRUMENTATION CONTROL

PARAMETER: RESISTANCE MEASUREMENTS AT 1 MA

CALIBRATION CHECK AT 1 MA

| CALIBRATION RESISTOR | VOLTAGE - FULL SCALE = 100 VOLTS | | |
|---|---|---|---|
| 2000 OHMS | 0202 ' | 0202 ' | 0202 ' |
| 1000 OHMS | 0098 ' | 0098 ' | 0097 ' |

| SAMPLE NUMBER | RESISTANCE - FULL SCALE = 100K OHMS R1 | R2 | R3 |
|---|---|---|---|
| 1 | 0198 ' | 0185 ' | 2125 ' |
| 2 | 0202 ' | 0191 ' | 4137 ' |
| 3 | 0193 ' | 0182 ' | 3976 ' |
| 4 | 0216 ' | 0194 ' | 3908 ' |
| 5' | 0205 ' | 0192 ' | 3929 ' |

| | | |
|---|---|---|
| TEST CONDUCTED FOR: NASA, OFFICE OF ADVANCED RESEARCH AND TECHNOLOGY | | DATE: 4-28-65 |
| TEST: POST-360HR MEAS - STEP 1 | SAMPLE NUMBER: NOTED | BAROM. PRESS. IN. HG. |
| PART NAME & NUMBER: DTL NAND/NOR GATE - SE102K | TEST MEDIUM: AIR | WET BULB TEMP. 59°F |
| MANUFACTURER: C | TEST TEMP. 73° C. ☐ F. ☒ | DRY BULB TEMP. 73°F |
| ENGINEER | TECHNICIAN: J. CALLEY | INSPECTOR |
| REF. SPEC. | | DATA SHEET NUMBER |

JOB NUMBER AO-138-AE PAGE OF TEST REPORT NO. TR1-1188

2011
4/65

GENERAL PRECISION, INC.
LIBRASCOPE GROUP

# ENVIRONMENTAL LABORATORY DATA SHEET

GROUP III - TEMP CYCLE STEP STRESS GROUP

PARAMETER: RESISTANCE MEASUREMENTS AT 1 MA

| SAMPLE NUMBER | R1 | RESISTANCE - FULL SCALE = 100 K OHMS R2 | R3 |
|---|---|---|---|
| 46 | 0212 2' | 0196 2' | 2202 2' |
| 47 | 0195 2' | 0183 2' | 2150 2' |
| 48 | 0225 2' | 0198 2' | 2220 2' |
| 49 | 0201 2' | 0188 2' | 2190 2' |
| 50 | 0212 2' | 0189 2' | 2155 2' |
| 51 | 0233 2' | 0220 2' | 2167 2' |
| 52 | 0231 2' | 0194 2' | 2228 2' |
| 53 | 0208 2' | 0192 2' | 2218 2' |
| 54 | 0203 2' | 0188 2' | 2186 2' |
| 55 | 0207 2' | 0192 2' | 2173 2' |
| 56 | 0204 2' | 0190 2' | 2171 2' |
| 57 | 0200 2' | 0188 2' | 2190 2' |
| 58 | 0196 2' | 0184 2' | 2138 2' |
| 59 | 0194 2' | 0183 2' | 2040 2' |
| 60 | 0202 2' | 0188 2' | 2164 2' |
| 61 | 0202 2' | 0192 2' | 2183 2' |
| 62 | 0200 2' | 0187 2' | 2197 2' |
| 63 | 0198 2' | 0189 2' | 2159 2' |
| 64 | 0202 2' | 0189 2' | 2162 2' |
| 65 | 0204 2' | 0189 2' | 2180 2' |

CALIBRATION CHECK

| CALIBRATION RESISTOR | | VOLTAGE - FULL SCALE = 100 VOLTS | |
|---|---|---|---|
| 2000 OHMS | 0202 2' | 0202 2' | 0202 2' |
| 1000 OHMS' | 0098 2' | 0098 2' | 0098 2' |

| | | |
|---|---|---|
| TEST CONDUCTED FOR: NASA, OFFICE OF ADVANCED RESEARCH AND TECHNOLOGY | | DATE: 4-28-65 |
| TEST: POST-360 HR MEAS - STEP 1 | SAMPLE NUMBER: NOTED | BAROM. PRESS. IN. HG. |
| PART NAME & NUMBER: DTL NAND/NOR GATE - SE 102K | TEST MEDIUM: AIR | WET BULB TEMP. 59°F |
| MANUFACTURER: e | TEST TEMP. 73° C. ☐ F. ☒ | DRY BULB TEMP. 73°F |
| ENGINEER | TECHNICIAN: J. CALLEY | INSPECTOR |
| REF. SPEC. | | DATA SHEET NUMBER |

JOB NUMBER AO-138-AE PAGE OF TEST REPORT NO. TR1-1188

2011
4/65

GENERAL PRECISION, INC.
LIBRASCOPE GROUP

# ENVIRONMENTAL LABORATORY DATA SHEET

GROUP I - INSTRUMENTATION CONTROL

CALIBRATION: CURRENT FULL SCALE = 10 MA

| RESISTOR | | | |
|---|---|---|---|
| 2000 OHMS | 1991 7' | 1989 7' | 1989 7' |
| 1000 OHMS | 4017 7' | 4016 7' | 4019 7' |

PARAMETER: DIODE FORWARD CURRENT WITH V10 = 4 VOLTS

| SAMPLE NUMBER | CURRENT FULL SCALE = 10 MA If7 | If8 | If9 |
|---|---|---|---|
| 1 | 1746 7' | 1757 7' | 1755 7' |
| 2 | 1700 7' | 1700 7' | 1705 7' |
| 3 | 1776 7' | 1779 7' | 1779 7' |
| 4 | 1679 7' | 1680 7' | 1679 7' |
| 5' | 1695 7' | 1695 7' | 1697 7' |

| | | |
|---|---|---|
| TEST CONDUCTED FOR: NASA, OFFICE OF ADVANCED RESEARCH AND TECHNOLOGY | | DATE: 4-29-65 |
| TEST: POST-360 HR MERS -STEP 1 | SAMPLE NUMBER: NOTED | BAROM. PRESS. IN. HG. |
| PART NAME & NUMBER: DTL NAND/NOR GATE - SE102K | TEST MEDIUM: AIR | WET BULB TEMP. 62°F |
| MANUFACTURER: C | TEST TEMP. 72° C. ☐ F. ☒ | DRY BULB TEMP. 72°F |
| ENGINEER | TECHNICIAN: J. CALLEY | INSPECTOR |
| REF. SPEC. | | DATA SHEET NUMBER |

JOB NUMBER Ao-138-AE PAGE OF TEST REPORT NO. TR1-1188

2011
4/65

GENERAL PRECISION, INC.
LIBRASCOPE GROUP

# ENVIRONMENTAL LABORATORY DATA SHEET

GROUP III - TEMP CYCLE STEP STRESS GROUP

PARAMETER: DIODE FORWARD CURRENT WITH V6 = 4 VOLTS

| SAMPLE NUMBER | If7 | CURRENT - FULL SCALE = 10 MA If8 | If9 |
|---|---|---|---|
| 46 | 1658 7' | 1656 7' | 1660 7' |
| 47 | 1780 7' | 1781 7' | 1784 7' |
| 48 | 1714 7' | 1709 7' | 1712 7' |
| 49 | 1728 7' | 1731 7' | 1732 7' |
| 50 | 1549 7' | 1441 7' | 1296 7' |
| 51 | 1722 7' | 1720 7' | 1677 7' |
| 52 | 1678 7' | 1678 7' | 1682 7' |
| 53 | 1694 7' | 1697 7' | 1694 7' |
| 54 | 1729 7' | 1730 7' | 1728 7' |
| 55 | 1698 7' | 1695 7' | 1696 7' |
| 56 | 1719 7' | 1722 7' | 1719 7' |
| 57 | 1732 7' | 1710 7' | 1733 7' |
| 58 | 1767 7' | 1771 7' | 1772 7' |
| 59 | 1780 7' | 1780 7' | 1779 7' |
| 60 | 1739 7' | 1737 7' | 1740 7' |
| 61 | 1699 7' | 1699 7' | 1702 7' |
| 62 | 1739 7' | 1739 7' | 1741 7' |
| 63 | 1726 7' | 1764 7' | 1760 7' |
| 64 | 1724 7' | 1729 7' | 1721 7' |
| 65 | 1718 7' | 1719 7' | 1720 7' |

CALIBRATION CHECK

| CALIBRATION | | CURRENT - | |
|---|---|---|---|
| 2000 OHMS | 1993 7' | 1998 7' | 1996 7' |
| 1000 OHMS' | 4014 7' | 4015 7' | 4012 7' |

| | | |
|---|---|---|
| TEST CONDUCTED FOR: NASA, OFFICE OF ADVANCED RESEARCH AND TECHNOLOGY | | DATE: 4-29-65 |
| TEST: POST-360 HR MERS - STEP 1 | SAMPLE NUMBER: NOTED | BAROM. PRESS. IN. HG. |
| PART NAME & NUMBER: DTL NAND/NOR GATE - SE102K | TEST MEDIUM: AIR | WET BULB TEMP. 62°F |
| MANUFACTURER: C | TEST TEMP. 72° C. ☐ F. ☒ | DRY BULB TEMP. 72°F |
| ENGINEER | TECHNICIAN: J. CALLEY | INSPECTOR |
| REF. SPEC. | | DATA SHEET NUMBER |

JOB NUMBER AO-138-AE PAGE OF TEST REPORT NO. TR1-1188

2011
4/65

GENERAL PRECISION, INC.
LIBRASCOPE GROUP

# ENVIRONMENTAL LABORATORY DATA SHEET

GROUP I - INSTRUMENTATION CONTROL

PARAMETER: OUTPUT SATURATION VOLTAGE AT Ic = 10 MA - Ib = 1 MA

CALIBRATION CHECK AT Ic = 10MA - Ib = 1 MA

| CALIBRATION RESISTOR | VOLTAGE - FULL SCALE = 10 VOLTS | | |
|---|---|---|---|
| 500 OHMS | 0499 7' | 0499 7' | 0500 2' |
| 50 OHMS | 0500 2' | 0500 2' | 0500 2' |

| SAMPLE NUMBER | VOLTAGE - FULL SCALE = 10 VOLTS V3 |
|---|---|
| 1 | 0199 2' |
| 2 | 0205 2' |
| 3 | 0193 2' |
| 4 | 0206 2' |
| 5' | 0194 2' |

| | | |
|---|---|---|
| TEST CONDUCTED FOR: NASA, OFFICE OF ADVANCED RESEARCH AND TECHNOLOGY | | DATE: 4-29-65 |
| TEST: POST-360 HR MEAS - STEP 1 | SAMPLE NUMBER: NOTED | BAROM. PRESS. IN. HG. |
| PART NAME & NUMBER: DTL NAND/NOR GATE - SE102K | TEST MEDIUM: AIR | WET BULB TEMP. 62°F |
| MANUFACTURER: C | TEST TEMP. 72° C. ☐ F. ☒ | DRY BULB TEMP. 72°F |
| ENGINEER / TECHNICIAN: J. CALLEY | INSPECTOR | |
| REF. SPEC. | DATA SHEET NUMBER | |

JOB NUMBER A0-138-AE PAGE OF TEST REPORT NO. TR1-1188

2011
4/65

GENERAL PRECISION, INC.
LIBRASCOPE GROUP

# ENVIRONMENTAL LABORATORY DATA SHEET

GROUP III- TEMP CYCLE STEP STRESS GROUP

PARAMETER: OUTPUT SATURATION VOLTAGE AT Ic= 10 MA Ib = 1 MA

VOLTAGE - FULL SCALE = 10 VOLTS

| SAMPLE NUMBER | V3 |
|---|---|
| 46 | 0208 1' |
| 47 | 0229 1' |
| 48 | 0218 1' |
| 49 | 0219 1' |
| 50 | 0230 1' |
| 51 | 0483 1' |
| 52 | 0675 1' |
| 53 | 0227 1' |
| 54 | 0220 1' |
| 55 | 0302 1' |
| 56 | 0227 1' |
| 57 | 0210 1' |
| 58 | 0198 1' |
| 59 | 0207 1' |
| 60 | 0321 1' |
| 61 | 0211 1' |
| 62 | 0203 1' |
| 63 | 0215 1' |
| 64 | 0221 1' |
| 65 | 0218 1' |

CALIBRATION CHECK AT Ic = 10MA - Ib = 1 MA

VOLTAGE - FULL SCALE = 10 VOLTS

| CALIBRATION RESISTOR | | | |
|---|---|---|---|
| 500 OHMS | 0500 1' | 0501 1' | 0501 1' |
| 50 OHMS' | 0501 1' | 0501 1' | 0502 1' |

| | | |
|---|---|---|
| TEST CONDUCTED FOR: NASA, OFFICE OF ADVANCED RESEARCH AND TECHNOLOGY | | DATE: 4-29-65 |
| TEST: POST-360 HR MEAS - STEP 1 | SAMPLE NUMBER: NOTED | BAROM. PRESS. IN. HG. |
| PART NAME & NUMBER: DTL NAND/NOR GATE-SE102K | TEST MEDIUM: AIR | WET BULB TEMP. 62°F |
| MANUFACTURER: C | TEST TEMP. 72° C. ☐ F. ☒ | DRY BULB TEMP. 72°F |
| ENGINEER / TECHNICIAN: J. CALLEY | INSPECTOR | |
| REF. SPEC. | DATA SHEET NUMBER | |

JOB NUMBER Ao-138-AE PAGE OF TEST REPORT NO. TR1-1188

2011
4/65

GENERAL PRECISION, INC.
LIBRASCOPE GROUP

# ENVIRONMENTAL LABORATORY DATA SHEET

GROUP I - INSTRUMENTATION CONTROL GROUP

PARAMETER: DC CURRENT GAIN VCE= 0.5 VOLTS
IC = 1.0 MA

CALIBRATION: NONE

BASE CURRENT - FULL SCALE = 100UA

| SAMPLE NUMBER | IB |
|---|---|
| 1 | 20.90 |
| 2 | 16.34 |
| 3 | 20.97 |
| 4 | 25.26 |
| 5' | 19.40 |

| | | |
|---|---|---|
| TEST CONDUCTED FOR: NASA OFFICE OF ADVANCED RESEARCH AND TECHNOLOGY | | DATE: 4-29-65 |
| TEST: POST-360 HR MEAS - STEP 1 | SAMPLE NUMBER: NOTED | BAROM. PRESS. IN. HG. |
| PART NAME & NUMBER: DTL NAND/NOR GATE - SE 102K | TEST MEDIUM: AIR | WET BULB TEMP. 62°F |
| MANUFACTURER: C | TEST TEMP. 72° C. ☐ F. ☒ | DRY BULB TEMP. 72°F |
| ENGINEER | TECHNICIAN: J. CALLEY | INSPECTOR |
| REF. SPEC. | | DATA SHEET NUMBER |

JOB NUMBER AO-138-AE PAGE OF TEST REPORT NO. TR1-1188

2011
4/65

GENERAL PRECISION, INC.
LIBRASCOPE GROUP

# ENVIRONMENTAL LABORATORY DATA SHEET

GROUP III - TEMP CYCLE STEP STRESS GROUP

PARAMETER: DC CURRENT GAIN VCE= 0.5 VOLTS
IC = 1.0 MA

BASE CURRENT - FULL SCALE = 100 UA

| SAMPLE NUMBER | IB | hFE |
|---|---|---|
| 46 | 15.98 | |
| 47 | 20.03 | |
| 48 | 20.92 | |
| 49 | 24.24 | |
| 50 | 20.40 | |
| 51 | 25.65 | |
| 52 | 22.71 | |
| 53 | 19.06 | |
| 54 | 20.26 | |
| 55 | 15.85 | |
| 56 | 15.96 | |
| 57 | 22.10 | |
| 58 | 20.24 | |
| 59 | 26.80 | |
| 60 | 16.31 | |
| 61 | 18.49 | |
| 62 | 15.57 | |
| 63 | 22.71 | |
| 64 | 15.56 | |
| 65 | 19.01 | |

| | | |
|---|---|---|
| TEST CONDUCTED FOR: NASA, OFFICE OF ADVANCED RESEARCH AND TECHNOLOGY | | DATE: 4-29-65 |
| TEST: POST -360 HR MEAS - STEP 1 | SAMPLE NUMBER: NOTED | BAROM. PRESS. IN. HG. |
| PART NAME & NUMBER: DTL NAND/NOR GATE - SE 102 K | TEST MEDIUM: AIR | WET BULB TEMP. 62° F |
| MANUFACTURER: C | TEST TEMP. 72° C. ☐ F. ☒ | DRY BULB TEMP. 72° F |
| ENGINEER | TECHNICIAN: J. CALLEY | INSPECTOR |
| REF. SPEC. | | DATA SHEET NUMBER |

JOB NUMBER A0-138-AE PAGE OF TEST REPORT NO. TR1-1188

2011
4/65

# Appendix C

## Parameter Variation Data

GENERAL PRECISION, INC.
LIBRASCOPE GROUP

# ENVIRONMENTAL LABORATORY DATA SHEET

GROUP IV

TEST CONDITIONS:
IF RETEST CHECK ☐ TEMP. STEP STRESS GROUP

VOLTAGE FULL SCALE = 100 VOLTS

$\Delta BV = -BV_{(INITIAL)} + BV$

| SERIAL NO. | BV7 | BV8 | BV9 | BVCBO |
|---|---|---|---|---|
| 66 | +0.33 | -0.38 | -0.13 | -0.16 |
| 67 | 0.00 | -0.02 | -0.24 | +0.01 |
| 68 | -0.39 | +0.74 | +1.28 | +0.70 |
| 69 | -0.02 | -0.09 | -0.04 | -0.05 |
| 70 | -0.38 | -0.37 | -0.12 | -0.20 |
| 71 | +1.12 | +1.66 | +1.24 | +2.74 |
| 72 | -0.61 | +0.02 | +0.03 | +0.65 |
| 73 | -0.01 | -0.13 | -0.04 | -0.01 |
| 74 | +0.26 | +0.36 | +0.61 | -0.05 |
| 75 | +0.28 | +0.02 | -0.04 | +0.02 |
| 76 | +0.10 | +0.01 | -0.08 | -0.06 |
| 77 | -1.48 | -1.57 | -1.53 | -0.06 |
| 78 | -0.05 | +0.16 | -0.02 | +0.03 |
| 79 | -0.01 | -0.03 | -0.03 | +0.37 |
| 80 | 0.00 | -0.07 | -0.01 | 0.00 |

| | | | |
|---|---|---|---|
| TEST CONDUCTED FOR: NASA OFFICE OF ADVANCE RESEARCH AND TECHNOLOGY | | | DATE: 6 MAY '65 |
| TEST: DATA REDUCTION - 240 HOURS | SAMPLE NUMBER: NOTED | | BAROM. PRESS. (IN. HG.): 29.70 |
| PART NAME & NUMBER: DTL NAND/NOR GATE SC736 | TEST MEDIUM: AIR | | WET BULB TEMP.: 60°F |
| MANUFACTURER: B | TEST TEMP.: 74° | C. ☐ F. ☑ | DRY BULB TEMP.: 74°F |
| ENGINEER | TECHNICIAN: F.J. Tacker | INSPECTOR | |
| REF. SPEC. | | DATA SHEET NUMBER | |

JOB NUMBER A0138AE PAGE 1 OF TEST REPORT NO. TR1-1188

601-2
1/64

GENERAL PRECISION, INC.
LIBRASCOPE GROUP

# ENVIRONMENTAL LABORATORY DATA SHEET

GROUP IV

TEST CONDITIONS:
IF RETEST CHECK ☐ TEMP. STEP STRESS GROUP.

VOLTAGE FULL SCALE = 100 VOLTS
ΔBV = BV (INITIAL) ± BV

| SERIAL NO. | BV 7 | BV 8 | BV 9 | BVCBO |
|---|---|---|---|---|
| 81 | -0.15 | -0.76 | +0.17 | -0.17 |
| 82 | -0.10 | -0.67 | -0.12 | -0.13 |
| 83 | +0.21 | +0.18 | -0.07 | -0.06 |
| 84 | +0.09 | -0.33 | -0.04 | -0.08 |
| 85 | +0.38 | +0.09 | +1.09 | 0.00 |
| 86 | +0.17 | +0.33 | +0.27 | +0.54 |
| 87 | +0.06 | -0.08 | -0.03 | +0.08 |
| 88 | +0.59 | +0.54 | 0.00 | -0.63 |
| 89 | +0.03 | +0.04 | +0.15 | +0.01 |
| 90 | +0.38 | +0.58 | +0.41 | +0.06 |
| 91 | +0.01 | +0.01 | 0.00 | 0.00 |
| 92 | +0.02 | +0.01 | -0.07 | +0.01 |
| 93 | -0.11 | -0.07 | -0.17 | -0.06 |
| 94 | +0.86 | +0.66 | +0.60 | -0.08 |
| 95 | -0.42 | -0.50 | -0.04 | -0.02 |
| 96 | +0.09 | -0.04 | +0.05 | +0.14 |
| 97 | -0.36 | -0.15 | -0.32 | -0.19 |
| 98 | -0.16 | -0.04 | 0.00 | -0.05 |
| 99 | +0.42 | +0.66 | +0.26 | -0.04 |
| 100 | +0.15 | +0.04 | +0.01 | -0.06 |

| | | | |
|---|---|---|---|
| TEST CONDUCTED FOR: NASA OFFICE OF ADVANCE RESEARCH AND TECHNOLOGY | | | DATE: 7 MAY 65 |
| TEST: DATA REDUCTION - 240 HOURS | SAMPLE NUMBER: NOTED | | BAROM. PRESS. IN. HG.: 29.68 |
| PART NAME & NUMBER: DTL NAND/NOR GATE - SC736 | TEST MEDIUM: AIR | | WET BULB TEMP.: 68°F |
| MANUFACTURER: B | TEST TEMP.: 72 | C. ☐ F. ☑ | DRY BULB TEMP.: 72°F |
| ENGINEER | TECHNICIAN: J. Lasher | INSPECTOR | |
| REF. SPEC. | | DATA SHEET NUMBER | |

JOB NUMBER A0138 AE PAGE 2 OF TEST REPORT NO. TR1-1188

601-2
1/64

GENERAL PRECISION, INC.
LIBRASCOPE GROUP

# ENVIRONMENTAL LABORATORY DATA SHEET

Group IV

TEST CONDITIONS:
IF RETEST CHECK ☐ TEMP. STEP STRESS GROUP.

VOLTAGE FULL SCALE = 100 VOLTS
ΔBV = BV(INITIAL) + BV

| SERIAL NO. | BV7 | BV8 | BV9 | BVCBO |
|---|---|---|---|---|
| 101 | +0.73 | +0.56 | +0.52 | +0.12 |
| 102 | -0.50 | +0.04 | -0.02 | -0.04 |
| 103 | -0.01 | +0.46 | -0.13 | -0.11 |
| 104 | +1.38 | +0.90 | +0.22 | +0.08 |
| 105 | +0.86 | +0.46 | +0.63 | +0.31 |
| 106 | 0.00 | -0.09 | -0.08 | -0.08 |
| 107 | +0.91 | +0.42 | +2.39 | -0.13 |
| 108 | -0.79 | +0.18 | +0.38 | -0.02 |
| 109 | +0.82 | +0.44 | +0.46 | +0.06 |
| 110 | +0.71 | +0.64 | +0.29 | -0.06 |
| 111 | +0.35 | -0.31 | +0.01 | -0.05 |
| 112 | +0.12 | +0.22 | +0.01 | -0.06 |
| 113 | -0.01 | -0.24 | +0.88 | 0.00 |
| 114 | +0.14 | -0.24 | -0.59 | -0.10 |
| 115 | +0.73 | +0.87 | +0.05 | -0.05 |

| | | | |
|---|---|---|---|
| TEST CONDUCTED FOR: NASA OFFICE OF ADVANCE RESEARCH AND TECHNOLOGY | | | DATE: 7 MAY '65 |
| TEST: DATA REDUCTION - 240 HOURS | SAMPLE NUMBER: NOTED | | BAROM. PRESS. (IN. HG.): 29.70 |
| PART NAME & NUMBER: DTL NAND/NOR GATE SC73C | TEST MEDIUM: AIR | | WET BULB TEMP.: 68°F |
| MANUFACTURER: B | TEST TEMP.: 72 | C. ☐ F. ☑ | DRY BULB TEMP.: 72°F |
| ENGINEER | TECHNICIAN: F. Lacher | INSPECTOR | |
| REF. SPEC. | | DATA SHEET NUMBER | |

JOB NUMBER A0 138 AE PAGE 3 OF TEST REPORT NO. TR1-1188

601-2
1/64

GENERAL PRECISION, INC.
LIBRASCOPE GROUP

# ENVIRONMENTAL LABORATORY DATA SHEET

Group IV

$I_R$ @ 4V

TEST CONDITIONS:
IF RETEST CHECK ☐

TEMP. STEP STRESS GROUP

$\Delta I = -I$ (initial) + $I$

READINGS IN NANOAMPS

| SERIAL NO. | $I_7$ | $I_8$ | $I_9$ | $I_{CBO}$ | $I_3$ | | | | |
|---|---|---|---|---|---|---|---|---|---|
| 66 | -0.9 | -0.8 | -0.8 | -1.1 | -1.0 | | | | |
| 67 | -0.6 | -0.6 | -0.6 | -0.3 | -0.8 | | | | |
| 68 | -0.9 | -0.8 | -0.8 | -0.7 | -0.9 | | | | |
| 69 | -0.7 | -0.6 | -0.7 | +2.0 | -0.9 | | | | |
| 70 | -0.9 | -1.0 | -1.0 | -1.2 | -1.0 | | | | |
| 71 | -1.0 | -1.0 | -0.9 | -2.2 | -6.0 | | | | |
| 72 | -0.9 | -1.0 | -0.7 | -1.5 | -0.8 | | | | |
| 73 | -0.7 | -0.6 | -0.7 | +4.3 | -1.0 | | | | |
| 74 | +0.6 | -1.0 | +2.6 | -0.9 | -1.1 | | | | |
| 75 | -0.9 | -1.0 | -1.3 | -2.1 | -0.9 | | | | |
| 76 | -0.5 | -1.4 | -0.9 | -1.2 | -0.8 | | | | |
| 77 | -1.0 | -0.9 | +4.4 | -1.6 | -1.2 | | | | |
| 78 | +4.1 | -0.8 | -0.7 | -0.6 | -0.5 | | | | |
| 79 | -0.7 | -0.6 | -0.5 | -1.1 | +5.1 | | | | |
| 80 | -0.7 | -0.7 | +0.3 | +2.0 | -0.9 | | | | |
| 81 | -0.9 | -0.9 | -0.9 | -1.5 | -1.1 | | | | |
| 82 | -0.7 | -0.7 | -0.7 | -1.2 | -0.6 | | | | |
| 83 | -0.6 | -0.7 | -0.5 | -3.1 | -0.9 | | | | |
| 84 | -0.6 | -0.8 | -0.7 | -0.6 | -0.8 | | | | |
| 85 | -0.8 | -0.7 | -0.9 | -1.3 | -0.8 | | | | |
| 86 | -1.1 | -1.2 | -1.2 | -1.7 | -1.4 | | | | |
| 87 | -0.9 | -0.9 | -0.9 | -1.6 | -1.3 | | | | |
| 88 | -0.9 | -0.9 | -0.9 | -0.4 | -0.9 | | | | |
| 89 | -0.9 | -0.8 | -0.9 | -1.2 | -1.4 | | | | |

| | | |
|---|---|---|
| TEST CONDUCTED FOR: NASA OFFICE OF ADVANCE RESEARCH AND TECHNOLOGY | | DATE: 7 MAY '65 |
| TEST: DATA REDUCTION - 240 HOUR | SAMPLE NUMBER: NOTED | BAROM. PRESS. IN. HG.: 29.70 |
| PART NAME & NUMBER: DTL NAND/NOR GATE - SC736 | TEST MEDIUM: AIR | WET BULB TEMP.: 68°F |
| MANUFACTURER: B | TEST TEMP.: 74 C. ☐ F. ☑ | DRY BULB TEMP.: 74°F |
| ENGINEER | TECHNICIAN: J. Zacher | INSPECTOR |
| REF. SPEC. | | DATA SHEET NUMBER |

JOB NUMBER A0138 AE PAGE 4 OF TEST REPORT NO. TR1-1188

601-2
1/64

GENERAL PRECISION, INC.
LIBRASCOPE GROUP

# ENVIRONMENTAL LABORATORY DATA SHEET

GROUP IV
$I_R$ @ 4V

TEST CONDITIONS:
IF RETEST CHECK ☐ TEMP STEP STRESS GROUP

$\Delta I = -I_{(INITIAL)} + I$
READINGS IN NANO AMPS

| SERIAL NO. | $I_7$ | $I_8$ | $I_9$ | $I_{CBO}$ | $I_3$ | | | | |
|---|---|---|---|---|---|---|---|---|---|
| 90 | -0.6 | -0.6 | -0.3 | -0.4 | -0.6 | | | | |
| 91 | -0.6 | -0.8 | -0.9 | -1.9 | -1.0 | | | | |
| 92 | -0.9 | -0.9 | -1.0 | -1.6 | -0.7 | | | | |
| 93 | -0.9 | -0.8 | -0.9 | -1.5 | -1.0 | | | | |
| 94 | -1.0 | -0.9 | -0.9 | -1.2 | -1.2 | | | | |
| 95 | -0.8 | -0.9 | -0.7 | -1.4 | -1.4 | | | | |
| 96 | -0.8 | -0.9 | -0.9 | -1.9 | -1.2 | | | | |
| 97 | -0.6 | -0.7 | -0.6 | -1.8 | -1.1 | | | | |
| 98 | -1.1 | -1.1 | +2.6 | -1.5 | -1.2 | | | | |
| 99 | -0.9 | -1.1 | -0.9 | -0.9 | -1.3 | | | | |
| 100 | +2.8 | -1.0 | -1.4 | -3.4 | -1.1 | | | | |
| 101 | -1.0 | -0.8 | -0.8 | -1.1 | -1.1 | | | | |
| 102 | -0.9 | -0.7 | -0.8 | -1.8 | -1.1 | | | | |
| 103 | -1.0 | -0.9 | -0.6 | -1.2 | -1.3 | | | | |
| 104 | -1.2 | -1.0 | +3.6 | -1.6 | -1.4 | | | | |
| 105 | -1.5 | -1.2 | -0.7 | -4.9 | -1.5 | | | | |

| | | |
|---|---|---|
| TEST CONDUCTED FOR: NASA OFFICE OF ADVANCE RESEARCH AND TECHNOLOGY | | DATE: 7 MAY '65 |
| TEST: DATA REDUCTION - 240 HOURS | SAMPLE NUMBER: NOTED | BAROM. PRESS. IN. HG.: 29.70 |
| PART NAME & NUMBER: DTL NAND/NOR GATE - SC 736 | TEST MEDIUM: AIR | WET BULB TEMP.: 58°F |
| MANUFACTURER: B | TEST TEMP.: 74° C. ☐ F. ☑ | DRY BULB TEMP.: 74°F |
| ENGINEER | TECHNICIAN: J. Lacher | INSPECTOR |
| REF. SPEC. | | DATA SHEET NUMBER |

JOB NUMBER A0 138 AE PAGE 5 OF TEST REPORT NO. TR1-1188

601-2
1/64

GENERAL PRECISION, INC.
LIBRASCOPE GROUP

# ENVIRONMENTAL LABORATORY DATA SHEET

GROUP IV
IR @ 4V

TEST CONDITIONS:
IF RETEST CHECK ☐ TEMP. STEP STRESS GROUP

$\Delta I = -I_{(INITIAL)} + I$
READINGS IN NANOAMPS

| SERIAL NO. | $I_7$ | $I_8$ | $I_9$ | $I_{CBO}$ | $I_3$ |
|---|---|---|---|---|---|
| 106 | -1.1 | -1.0 | -1.0 | -2.3 | -1.3 |
| 107 | -1.1 | +0.4 | -0.7 | -1.7 | -1.1 |
| 108 | -0.9 | -1.0 | -1.0 | -3.8 | -0.9 |
| 109 | -1.1 | -0.9 | +3.5 | -1.6 | -1.2 |
| 110 | -1.0 | -1.0 | -0.9 | -2.1 | -1.2 |
| 111 | -0.7 | +4.1 | -0.6 | -1.6 | +3.0 |
| 112 | +0.3 | -0.8 | -0.7 | -2.7 | -1.3 |
| 113 | +1.6 | -1.2 | -1.0 | +3.8 | -1.3 |
| 114 | +2.5 | -0.7 | +0.8 | -1.8 | -1.0 |
| 115 | -0.9 | +2.3 | -0.9 | -0.3 | -1.3 |

| | | | |
|---|---|---|---|
| TEST CONDUCTED FOR: NASA OFFICE OF ADVANCE RESEARCH AND TECHNOLOGY | | | DATE: 7 MAY '65 |
| TEST: DATA REDUCTION - 240 HOURS | SAMPLE NUMBER: NOTED | | BAROM. PRESS. (IN. HG.): 29.70 |
| PART NAME & NUMBER: DTL - NAND/NOR GATE - SC736 | TEST MEDIUM: AIR | | WET BULB TEMP.: 58°F |
| MANUFACTURER: B | TEST TEMP.: 72 | C. ☐ F. ☑ | DRY BULB TEMP.: 72°F |
| ENGINEER | TECHNICIAN: [illegible] | INSPECTOR | |
| REF. SPEC. | | DATA SHEET NUMBER | |

JOB NUMBER A0 138 AE PAGE 6 OF TEST REPORT NO. TR1-1188

601-2
1/64

GENERAL PRECISION, INC.
LIBRASCOPE GROUP

# ENVIRONMENTAL LABORATORY DATA SHEET

GROUP IV

TEST CONDITIONS:
IF RETEST CHECK ☐ TEMP. STEP STRESS GROUP

RESISTANCE MEASUREMENTS AT 1 MA.
FULL SCALE = 100 K OHMS
$\Delta R = R_{(INITIAL)} + R$

| SERIAL NO. | RESISTANCE $R_1$ | | $R_2$ | | $R_3$ | | | | |
|---|---|---|---|---|---|---|---|---|---|
| 66 | -0.04 | | -0.04 | | -0.10 | | | | |
| 67 | 0.00 | | -0.01 | | -0.07 | | | | |
| 68 | -0.01 | | -0.02 | | -0.10 | | | | |
| 69 | +0.01 | | -0.02 | | -0.12 | | | | |
| 70 | -0.03 | | -0.02 | | -0.10 | | | | |
| 71 | -0.01 | | -0.03 | | -0.15 | | | | |
| 72 | -0.02 | | -0.01 | | -0.10 | | | | |
| 73 | -0.01 | | -0.03 | | -0.08 | | | | |
| 74 | 0.00 | | 0.00 | | -0.21 | | | | |
| 75 | -0.01 | | 0.00 | | -0.19 | | | | |
| 76 | +0.01 | | -0.01 | | -0.14 | | | | |
| 77 | -0.02 | | -0.01 | | -0.14 | | | | |
| 78 | 0.00 | | -0.03 | | -0.10 | | | | |
| 79 | -0.01 | | 0.00 | | -0.17 | | | | |
| 80 | -0.01 | | -0.04 | | -0.12 | | | | |

| | | |
|---|---|---|
| TEST CONDUCTED FOR: NASA OFFICE OF ADVANCE RESEARCH AND TECHNOLOGY | | DATE: 7 MAY '65 |
| TEST: DATA REDUCTION - 240 HOURS | SAMPLE NUMBER: NOTED | BAROM. PRESS. (IN. HG.): 29.70 |
| PART NAME & NUMBER: DTL NAND/NOR GATE SC736 | TEST MEDIUM: AIR | WET BULB TEMP.: 58°F |
| MANUFACTURER: B | TEST TEMP.: 72 C. ☐ F. ☑ | DRY BULB TEMP.: 72°F |
| ENGINEER: | TECHNICIAN: F. Locker | INSPECTOR: |
| REF. SPEC.: | | DATA SHEET NUMBER: |

JOB NUMBER 40138 AE PAGE 7 OF TEST REPORT NO. TR1-1188

901 2
1/64

GENERAL PRECISION, INC.
LIBRASCOPE GROUP

# ENVIRONMENTAL LABORATORY DATA SHEET

GROUP IV

TEST CONDITIONS:
IF RETEST CHECK ☐ TEMP. STEP. STRESS GROUP

RESISTANCE MEASUREMENTS AT 1MA.
RESISTANCE FULL SCALE = 100K ohms
$\Delta R = -R(\text{INITIAL}) + R$

| SERIAL NO. | $R_1$ | $R_2$ | $R_3$ |
|---|---|---|---|
| 81 | 0.00 | -0.08 | -0.12 |
| 82 | 0.00 | -0.03 | -0.14 |
| 83 | +0.02 | -0.02 | -0.15 |
| 84 | 0.00 | -0.01 | -0.12 |
| 85 | -0.01 | -0.01 | -0.14 |
| 86 | -0.02 | -0.02 | -0.11 |
| 87 | -0.01 | -0.01 | -0.19 |
| 88 | 0.00 | +0.01 | -0.16 |
| 89 | 0.00 | -0.03 | -0.16 |
| 90 | -0.02 | -0.04 | -0.16 |
| 91 | +0.01 | -0.02 | -0.12 |
| 92 | +0.01 | 0.00 | -0.11 |
| 93 | -0.01 | -0.05 | -0.11 |
| 94 | -0.02 | -0.02 | -0.12 |
| 95 | 0.00 | -0.03 | -0.14 |
| 96 | -0.03 | 0.00 | -0.13 |
| 97 | -0.01 | -0.03 | -0.09 |
| 98 | -0.02 | -0.03 | -0.13 |
| 99 | +0.02 | 0.00 | -0.18 |
| 100 | -0.03 | -0.02 | -0.20 |

| | | |
|---|---|---|
| TEST CONDUCTED FOR: NASA OFFICE OF ADVANCE RESEARCH AND TECHNOLOGY | | DATE: 7 MAY '65 |
| TEST: DATA REDUCTION - 240 HOURS | SAMPLE NUMBER: NOTED | BAROM. PRESS. IN. HG.: 29.70 |
| PART NAME & NUMBER: DTL NAND/NOR GATE - SC736 | TEST MEDIUM: AIR | WET BULB TEMP.: 58°F |
| MANUFACTURER: B | TEST TEMP.: 72 C. ☐ F. ☑ | DRY BULB TEMP.: 72°F |
| ENGINEER | TECHNICIAN: F. Locher | INSPECTOR |
| REF. SPEC. | | DATA SHEET NUMBER |

JOB NUMBER AO 138 AE PAGE 8 OF TEST REPORT NO. TR1-1188

601-2
1/64

GENERAL PRECISION, INC.
LIBRASCOPE GROUP

# ENVIRONMENTAL LABORATORY DATA SHEET

GROUP IV

TEST CONDITIONS:
IF RETEST CHECK ☐ TEMP STEP STRESS GROUP

RESISTANCE MEASUREMENTS AT 1MA.
RESISTANCE FULL SCALE = 100K OHMS
$\Delta R = -R(\text{initial}) + R$

| SERIAL NO. | $R_1$ | $R_2$ | $R_3$ |
|---|---|---|---|
| 101 | -0.20 | -0.08 | -0.80 |
| 102 | 0.00 | -0.02 | -0.13 |
| 103 | 0.00 | -0.01 | -0.13 |
| 104 | 0.00 | -0.03 | -0.15 |
| 105 | -0.02 | -0.03 | -0.17 |
| 106 | -0.04 | -0.02 | -0.09 |
| 107 | -0.02 | -0.01 | -0.11 |
| 108 | -0.04 | -0.01 | -0.15 |
| 109 | -0.01 | -0.02 | -0.16 |
| 110 | -0.02 | -0.02 | -0.17 |
| 111 | -0.02 | -0.02 | -0.11 |
| 112 | 0.00 | -0.02 | -0.11 |
| 113 | +0.02 | -0.01 | -0.12 |
| 114 | -0.03 | +0.01 | -0.07 |
| 115 | 0.00 | +7.19 | -0.17 |

| | | |
|---|---|---|
| TEST CONDUCTED FOR: NASA OFFICE OF ADVANCE RESEARCH AND TECHNOLOGY | | DATE: 7 MAY '65 |
| TEST: DATA REDUCTION - 240 HOURS | SAMPLE NUMBER: NOTED | BAROM. PRESS. IN HG.: 29.70 |
| PART NAME & NUMBER: DTL - NAND/NOR GATE SC736 | TEST MEDIUM: AIR | WET BULB TEMP.: 58°F |
| MANUFACTURER: B | TEST TEMP.: 72 C. ☐ F. ☑ | DRY BULB TEMP.: 72°F |
| ENGINEER: | TECHNICIAN: J J Lacher | INSPECTOR: |
| REF. SPEC.: | | DATA SHEET NUMBER: |

JOB NUMBER A0138AE PAGE 9 OF TEST REPORT NO. TR1-1188

601-2
1/64

GENERAL PRECISION, INC.
LIBRASCOPE GROUP

# ENVIRONMENTAL LABORATORY DATA SHEET

Group IV

TEST CONDITIONS:
IF RETEST CHECK ☐ TEMP. STEP STRESS GROUP

DIODE FORWARD CURRENT WITH $V_R$ = 4 VOLTS
CURRENT FULL SCALE = 10 MA

$\Delta I_f = -I_{f(INITIAL)} + I_f$

| SERIAL NO. | $I_f$ 7 | | $I_f$ 8 | | $I_f$ 9 | | | | |
|---|---|---|---|---|---|---|---|---|---|
| 66 | -0.027 | | -0.022 | | -0.020 | | | | |
| 67 | -0.020 | | -0.019 | | -0.040 | | | | |
| 68 | -0.036 | | -0.029 | | -0.026 | | | | |
| 69 | -0.030 | | -0.025 | | -0.025 | | | | |
| 70 | -0.045 | | -0.019 | | -0.047 | | | | |
| 71 | -0.021 | | -0.018 | | -0.020 | | | | |
| 72 | -0.037 | | -0.035 | | -0.027 | | | | |
| 73 | -0.036 | | -0.019 | | -0.032 | | | | |
| 74 | -0.034 | | -0.032 | | -0.044 | | | | |
| 75 | -0.060 | | -0.036 | | -0.043 | | | | |
| 76 | -0.009 | | -0.017 | | -0.002 | | | | |
| 77 | -0.037 | | -0.011 | | -0.022 | | | | |
| 78 | -0.036 | | -0.022 | | -0.025 | | | | |
| 79 | -0.033 | | -0.033 | | -0.039 | | | | |
| 80 | -0.035 | | -0.015 | | -0.038 | | | | |

| | | |
|---|---|---|
| TEST CONDUCTED FOR: NASA OFFICE OF ADVANCE RESEARCH AND TECHNOLOGY | | DATE: 7 MAY '65 |
| TEST: DATA REDUCTION - 240 HOUR. | SAMPLE NUMBER: NOTED | BAROM. PRESS. (IN. HG.): 29.70 |
| PART NAME & NUMBER: DTL - NAND/NOR GATE SC736 | TEST MEDIUM: AIR | WET BULB TEMP.: 57°F |
| MANUFACTURER: B | TEST TEMP.: 73 C. ☐ F. ☒ | DRY BULB TEMP.: 73°F |
| ENGINEER | TECHNICIAN: F. J. Lacher | INSPECTOR |
| REF. SPEC. | | DATA SHEET NUMBER |

JOB NUMBER A0138 AE PAGE 10 OF TEST REPORT NO. TR1-1188

601-2
1/64

GENERAL PRECISION, INC.
LIBRASCOPE GROUP

# ENVIRONMENTAL LABORATORY DATA SHEET

GROUP IV

TEST CONDITIONS:
IF RETEST CHECK ☐ TEMP STEP STRESS GROUP

DIODE FORWARD CURRENT with $V_6$ = 4 VOLTS
CURRENT FULL SCALE = 10 MA
$\Delta I_f = -I_{f(INITIAL)} + I_f$

| SERIAL No. | $I_f$ 7 | $I_f$ 8 | $I_f$ 9 |
|---|---|---|---|
| 81 | +0.036 | +0.036 | +0.050 |
| 82 | -0.029 | -0.027 | -0.033 |
| 83 | -0.043 | -0.039 | -0.023 |
| 84 | -0.046 | -0.028 | -0.034 |
| 85 | -0.038 | -0.033 | -0.021 |
| 86 | -0.040 | -0.040 | -0.026 |
| 87 | -0.030 | -0.006 | -0.031 |
| 88 | -0.002 | -0.016 | OPEN |
| 89 | -0.006 | -0.010 | -0.004 |
| 90 | -0.008 | -0.036 | -0.011 |
| 91 | -0.021 | -0.004 | -0.031 |
| 92 | -0.017 | -0.039 | -0.004 |
| 93 | -0.027 | -0.026 | -0.019 |
| 94 | -0.030 | -0.008 | 0.000 |
| 95 | -0.012 | -0.009 | -0.003 |
| 96 | -0.022 | -0.005 | -0.014 |
| 97 | -0.004 | -0.003 | +0.001 |
| 98 | -0.023 | -0.022 | -0.005 |
| 99 | -0.013 | -0.008 | +0.002 |
| 100 | -0.024 | -0.002 | -0.002 |

| | | | |
|---|---|---|---|
| TEST CONDUCTED FOR: NASA, OFFICE OF ADVANCE RESEARCH AND TECHNOLOGY | | | DATE: 7 MAY '65 |
| TEST: DATA REDUCTION - 240 HOURS | SAMPLE NUMBER: NOTED | | BAROM. PRESS. (IN. HG.): 29.70 |
| PART NAME & NUMBER: DTL-NAND/NOR GATE - SC 736 | TEST MEDIUM: AIR | | WET BULB TEMP.: 57°F |
| MANUFACTURER: B | TEST TEMP.: 73 | C. ☐ F. ☒ | DRY BULB TEMP.: 73°F |
| ENGINEER | TECHNICIAN: F. Zacher | INSPECTOR | |
| REF. SPEC. | | DATA SHEET NUMBER | |

JOB NUMBER A0138 AE PAGE 11 OF TEST REPORT NO. TR1-1188

601-2
1/64

GENERAL PRECISION, INC.
LIBRASCOPE GROUP

# ENVIRONMENTAL LABORATORY DATA SHEET

Group IV

TEST CONDITIONS:
IF RETEST CHECK ☐ TEMP STEP STRESS GROUP

DIODE FORWARD CURRENT with V6 = 4 VOLTS
CURRENT FULL SCALE = 10 MA
$\Delta I_f = -I_f$ (INITIAL) + $I_f$

| SERIAL NO. | If 7 | If 8 | If 9 |
|---|---|---|---|
| 101 | -0.031 | -0.016 | -0.021 |
| 102 | -0.026 | -0.019 | |
| 103 | -0.017 | -0.030 | -0.032 |
| 104 | -0.024 | -0.026 | -0.048 |
| 105 | -0.014 | -0.036 | -0.012 |
| 106 | -0.038 | -0.039 | -0.037 |
| 107 | -0.037 | -0.032 | -0.041 |
| 108 | -0.033 | -0.027 | -0.030 |
| 109 | -0.025 | -0.027 | -0.048 |
| 110 | -0.030 | -0.025 | -0.025 |
| 111 | -0.060 | -0.034 | -0.043 |
| 112 | -0.038 | -0.026 | -0.028 |
| 113 | -0.028 | -0.046 | -0.026 |
| 114 | -0.027 | -0.039 | -0.045 |
| 115 | -0.021 | -0.041 | -0.035 |

| | | | |
|---|---|---|---|
| TEST CONDUCTED FOR: NASA, OFFICE OF ADVANCE RESEARCH AND TECHNOLOGY | | | DATE: 7 MAY '65 |
| TEST: DATA REDUCTION - 240 HOUR | SAMPLE NUMBER: NOTED | | BAROM. PRESS. IN. HG.: 29.70 |
| PART NAME & NUMBER: DTL - NAND/NOR GATE - SC 736 | TEST MEDIUM: AIR | | WET BULB TEMP.: 58°F |
| MANUFACTURER: B | TEST TEMP.: 74 | C. ☐ F. ☑ | DRY BULB TEMP.: 74°F |
| ENGINEER | TECHNICIAN: J. Locher | INSPECTOR | |
| REF. SPEC. | | DATA SHEET NUMBER | |

JOB NUMBER A0 138 AE PAGE 12 OF TEST REPORT NO. TR1-1188

601-2
1/64

GENERAL PRECISION, INC.
LIBRASCOPE GROUP

# ENVIRONMENTAL LABORATORY DATA SHEET

TEST CONDITIONS:
IF RETEST CHECK ☐ PARAMETER CHANGE

BREAKDOWN VOLTAGE

TEMP STEP STRESS — VENDOR A

| | BV1 | | BV2 | | BV8 | | BV9 | | |
|---|---|---|---|---|---|---|---|---|---|
| 66 | 0.001 | | 0.014 | | 0.028 | | 0.004 | | |
| 67 | 0.012 | | 0.015 | | 0.048 | | -0.095 | | |
| 68 | 0.009 | | -0.001 | | 0.020 | | 0.013 | | |
| 69 | -0.115 | | 0.010 | | -0.021 | | 0.017 | | |
| 70 | 0.009 | | 0.010 | | 0.047 | | 0.006 | | |
| 71 | 0.010 | | 0.003 | | 0.012 | | 0.040 | | |
| 72 | -0.009 | | 0.009 | | 0.016 | | 0.042 | | |
| 73 | 0.239 | | -0.065 | | -0.059 | | 0.044 | | |
| 74 | -0.006 | | -0.342 | | -0.050 | | 0.012 | | |
| 75 | -0.026 | | 0.132 | | 0.026 | | -0.156 | | |
| 76 | -0.025 | | -0.185 | | -0.015 | | -0.048 | | |
| 77 | 0.006 | | 0.007 | | 0.010 | | 0.017 | | |
| 78 | -0.006 | | 0.006 | | 0.034 | | -0.057 | | |
| 79 | -0.044 | | -0.017 | | -0.078 | | -0.024 | | |
| 80 | 0.064 | | 0.005 | | -0.036 | | -0.051 | | |

| | | | |
|---|---|---|---|
| TEST CONDUCTED FOR | | | DATE |
| TEST 200°C | | SAMPLE NUMBER | BAROM. PRESS. IN. HG. |
| PART NAME & NUMBER | | TEST MEDIUM | WET BULB TEMP. |
| MANUFACTURER A | | TEST TEMP. C. ☐ F. ☐ | DRY BULB TEMP. |
| ENGINEER | TECHNICIAN | INSPECTOR | |
| REF. SPEC. | | DATA SHEET NUMBER | |

JOB NUMBER _____ PAGE 13 OF TEST REPORT NO. _____

601-2
1/64

GENERAL PRECISION, INC.
LIBRASCOPE GROUP

# ENVIRONMENTAL LABORATORY DATA SHEET

TEST CONDITIONS:
IF RETEST CHECK ☐ PARAMETER CHANGE

BREAKDOWN VOLTAGE
TEMP STEP STRESS – VENDOR A

| | BV1 | | BV2 | | BV8 | | BV9 | | |
|---|---|---|---|---|---|---|---|---|---|
| 81 | 0.011 | | -0.043 | | -0.004 | | 0.161 | | |
| 82 | 0.020 | | 0.044 | | -0.018 | | -0.006 | | |
| 83 | 0.020 | | 0.075 | | -0.086 | | -0.066 | | |
| 84 | 0.012 | | 0.045 | | 0.013 | | 0.015 | | |
| 85 | 0.095 | | -0.064 | | -0.068 | | -0.066 | | |
| 86 | 0.013 | | 0.128 | | -0.077 | | -0.320 | | |
| 87 | 0.044 | | 0.039 | | -0.020 | | -0.021 | | |
| 88 | 0.010 | | 0.032 | | 0.012 | | 0.009 | | |
| 89 | -0.124 | | 0.042 | | -0.100 | | 0.001 | | |
| 90 | 0.010 | | -0.279 | | -0.015 | | 0.162 | | |
| 91 | -0.043 | | 0.020 | | 0.023 | | 0.037 | | |
| 92 | 0.004 | | 0.011 | | 0.033 | | 0.063 | | |
| 93 | 0.007 | | 0.011 | | 0.014 | | 0.012 | | |
| 94 | 0.010 | | 0.014 | | 0.048 | | 0.023 | | |
| 95 | 0.015 | | 0.001 | | 0.010 | | 0.008 | | |
| 96 | 0.009 | | 0.031 | | 0.005 | | 0.022 | | |
| 97 | 0.004 | | -0.042 | | 0.076 | | 0.020 | | |
| 98 | 0.109 | | 0.172 | | -0.109 | | 0.047 | | |
| 99 | 0.035 | | 0.083 | | 0.012 | | 0.003 | | |
| 100 | 0.005 | | -0.009 | | -0.002 | | 0.001 | | |

| | | | |
|---|---|---|---|
| TEST CONDUCTED FOR | | | DATE |
| TEST 200°C | | SAMPLE NUMBER | BAROM. PRESS. IN. HG. |
| PART NAME & NUMBER | | TEST MEDIUM | WET BULB TEMP. |
| MANUFACTURER A | | TEST TEMP. C. ☐ F. ☐ | DRY BULB TEMP. |
| ENGINEER | TECHNICIAN | INSPECTOR | |
| REF. SPEC. | | DATA SHEET NUMBER | |

JOB NUMBER _____ PAGE 14 OF TEST REPORT NO. _____

601-2
1/64

GENERAL PRECISION, INC.
LIBRASCOPE GROUP

# ENVIRONMENTAL LABORATORY DATA SHEET

TEST CONDITIONS:
IF RETEST CHECK ☐ PARAMETER CHANGE

BREAKDOWN VOLTAGE

TEMP STEP STRESS — VENDOR A

| | | | | | | | | | |
|---|---|---|---|---|---|---|---|---|---|
| 101 | 0.026 | | 0.301 | | 0.006 | | 0.017 | | |
| 102 | -0.035 | | 0.099 | | 0.016 | | 0.012 | | |
| 103 | -0.044 | | -0.220 | | 0.031 | | 0.033 | | |
| 104 | 0.391 | | 0.006 | | -0.049 | | 0.065 | | |
| 105 | 0.120 | | 0.091 | | 0.173 | | 0.021 | | |
| 106 | -0.234 | | 0.038 | | -0.006 | | 0.024 | | |
| 107 | -0.012 | | 0.012 | | -0.039 | | -0.026 | | |
| 108 | 0.007 | | -0.004 | | 0.340 | | -0.018 | | |
| 109 | -0.073 | | 0.063 | | 0.004 | | 0.001 | | |
| 110 | 0.017 | | 0.003 | | 0.012 | | 0.031 | | |
| 111 | 0.143 | | -0.025 | | -0.054 | | 0.016 | | |
| 112 | -0.007 | | 0.005 | | -0.011 | | 0.035 | | |
| 113 | -0.550 | | 0.026 | | -0.016 | | ∞ | | |
| 114 | 0.011 | | -0.035 | | -0.097 | | 0.016 | | |
| 115 | 0.076 | | -0.037 | | 0.023 | | -0.121 | | |

| | | | |
|---|---|---|---|
| TEST CONDUCTED FOR | | | DATE |
| TEST 200°C | | SAMPLE NUMBER | BAROM. PRESS. IN. HG. |
| PART NAME & NUMBER | | TEST MEDIUM | WET BULB TEMP. |
| MANUFACTURER A | | TEST TEMP. C. ☐ F. ☐ | DRY BULB TEMP. |
| ENGINEER | TECHNICIAN | INSPECTOR | |
| REF. SPEC. | | DATA SHEET NUMBER | |

JOB NUMBER _____ PAGE 15 OF TEST REPORT NO. _____

601-2
1/64

GENERAL PRECISION, INC.
LIBRASCOPE GROUP

# ENVIRONMENTAL LABORATORY DATA SHEET

TEST CONDITIONS: PARAMETER CHANGE
IF RETEST CHECK ☐

REVERSE CURRENT #1
TEMP STEP STRESS – VENDOR A

| | $I_1$ | $I_2$ | $I_8$ | $I_9$ |
|---|---|---|---|---|
| 66 | 1.3 | -0.3 | -3.0 | -6 |
| 67 | -7.9 | -0.7 | 6. | 0 |
| 68 | -6.3 | 0.5 | 4 | -3 |
| 69 | -1.2 | 6.9 | 29 | 0 |
| 70 | 1.5 | -4.0 | -3 | 2 |
| 71 | 1.7 | 1.8 | -4 | -9 |
| 72 | -54.6 | 22.0 | — | -23 |
| 73 | — | 7.8 | 32 | -12 |
| 74 | 5.3 | — | > 18 | -3 |
| 75 | 18.7 | — | 3 | 30 |
| 76 | -1.4 | > 17.0 | — | — |
| 77 | -0.1 | -1.4 | 1 | 2 |
| 78 | 4.1 | -0.4 | -5 | — |
| 79 | 4.1 | -5.8 | 15 | 26 |
| 80 | -4.3 | 0.5 | 23 | -33 |

| | | | |
|---|---|---|---|
| TEST CONDUCTED FOR | | | DATE |
| TEST 200°C | SAMPLE NUMBER | | BAROM. PRESS. IN. HG. |
| PART NAME & NUMBER | TEST MEDIUM | | WET BULB TEMP. |
| MANUFACTURER A | TEST TEMP. | C. ☐ F. ☐ | DRY BULB TEMP. |
| ENGINEER | TECHNICIAN | INSPECTOR | |
| REF. SPEC. | | DATA SHEET NUMBER | |

JOB NUMBER _____ PAGE 16 OF TEST REPORT NO. _____

601-2
1/64

GENERAL PRECISION, INC.
LIBRASCOPE GROUP

# ENVIRONMENTAL LABORATORY DATA SHEET

TEST CONDITIONS:
IF RETEST CHECK ☐ PARAMETER CHANGE

REVERSE CURRENT #1
TEMP STEP STRESS VENDOR A

| | $I_1$ | | $I_2$ | | $I_8$ | | $I_9$ | | |
|---|---|---|---|---|---|---|---|---|---|
| 81 | -5 | | -1 | | -13 | | -33 | | |
| 82 | -3 | | -2 | | 6 | | 5 | | |
| 83 | 0 | | 11 | | 14 | | -6 | | |
| 84 | 0 | | -2 | | 5 | | -2 | | |
| 85 | -23 | | -5 | | 15 | | -4 | | |
| 86 | -2 | | -17 | | 4 | | — | | |
| 87 | -1 | | — | | — | | 8 | | |
| 88 | 5 | | -3 | | -6 | | 3 | | |
| 89 | 50 | | -19 | | -27 | | -10 | | |
| 90 | -10 | | — | | > 15 | | — | | |
| 91 | -19 | | -10 | | -12 | | -21 | | |
| 92 | 11 | | 1 | | -15 | | -50 | | |
| 93 | -1 | | -1 | | 0 | | 0 | | |
| 94 | -3 | | -1 | | 0 | | -1 | | |
| 95 | 7 | | 11 | | 0 | | -4 | | |
| 96 | 2 | | -1 | | 7 | | -4 | | |
| 97 | 5 | | — | | — | | — | | |
| 98 | 1 | | -28 | | — | | — | | |
| 99 | -3 | | -16 | | -6 | | 3 | | |
| 100 | > 160 | | -14 | | -3 | | -3 | | |

| | | | |
|---|---|---|---|
| TEST CONDUCTED FOR | | | DATE |
| TEST 200°C | | SAMPLE NUMBER | BAROM. PRESS. IN. HG |
| PART NAME & NUMBER | | TEST MEDIUM | WET BULB TEMP. |
| MANUFACTURER A | | TEST TEMP. C. ☐ F. ☐ | DRY BULB TEMP. |
| ENGINEER | TECHNICIAN | INSPECTOR | |
| REF. SPEC. | | DATA SHEET NUMBER | |

JOB NUMBER _____ PAGE 17 OF TEST REPORT NO _____

601-2
1/64

GENERAL PRECISION, INC.
LIBRASCOPE GROUP

# ENVIRONMENTAL LABORATORY DATA SHEET

TEST CONDITIONS:
IF RETEST CHECK ☐

PARAMETER CHANGE

REVERSE CURRENT #1

TEMP STEP STRESS VENDOR A

| | $I_1$ | $I_2$ | $I_8$ | $I_9$ |
|---|---|---|---|---|
| 101 | 9 | — | 6 | 26 |
| 102 | 30 | ≥15 | 25 | -15 |
| 103 | 29 | 16 | -5 | -26 |
| 104 | | -12 | 7 | -10 |
| 105 | | +6 | -52 | 0 |
| 106 | ≥137 | -87 | 11 | — |
| 107 | 8 | 11 | 11 | 1 |
| 108 | -1 | 18 | — | ≥49 |
| 109 | 11 | -1 | -2 | 7 |
| 110 | -1 | -1 | -4 | 0 |
| 111 | -14 | 6 | — | 2 |
| 112 | 0 | 3 | 29 | 3 |
| 113 | -11 | 2 | 8 | 1 |
| 114 | -4 | -5 | 9 | 0 |
| 115 | -11 | -6 | -5 | 1 |

| | | | |
|---|---|---|---|
| TEST CONDUCTED FOR | | | DATE |
| TEST 200°C | | SAMPLE NUMBER | BAROM. PRESS. IN. HG. |
| PART NAME & NUMBER | | TEST MEDIUM | WET BULB TEMP. |
| MANUFACTURER A | | TEST TEMP. C. ☐ F. ☐ | DRY BULB TEMP. |
| ENGINEER | TECHNICIAN | INSPECTOR | |
| REF. SPEC. | | DATA SHEET NUMBER | |

JOB NUMBER _____ PAGE 18 OF TEST REPORT NO. _____

601-2
1/64

GENERAL PRECISION, INC.
LIBRASCOPE GROUP

# ENVIRONMENTAL LABORATORY DATA SHEET

TEST CONDITIONS:
IF RETEST CHECK ☐ PARAMETER CHANGE

REVERSE CURRENT #2
TEMP STEP STRESS — VENDOR A

| | $I_1$ | $I_2$ | $I_3$ | $I_8$ | $I_9$ |
|---|---|---|---|---|---|
| 66 | 4 | 0 | 2 | -7 | 11 |
| 67 | -1 | 0 | -10 | -10 | -10 |
| 68 | 2 | 0 | 7 | -4 | -5 |
| 69 | -1 | 9 | 21 | -24 | -3 |
| 70 | 8 | 0 | 0 | -8 | -12 |
| 71 | 2 | 3 | 1 | -9 | 24 |
| 72 | -35 | 46 | -3 | -40 | -35 |
| 73 | -92 | 16 | 4 | -5 | -50 |
| 74 | 5 | 132 | -1 | -66 | -15 |
| 75 | 27 | 13 | 1.4na | -9 | -27 |
| 76 | 0 | 25 | 8 | -0.6na | -47 |
| 77 | 1 | 0 | 1 | -2 | -1 |
| 78 | 6 | 4 | 23 | -20 | -225 |
| 79 | 6 | -3 | -2 | -26 | 0 |
| 80 | 1 | 2 | -19 | -18 | -56 |

| | | | |
|---|---|---|---|
| TEST CONDUCTED FOR | | | DATE |
| TEST 200°C 240 hrs | SAMPLE NUMBER | | BAROM. PRESS. IN. HG. |
| PART NAME & NUMBER | TEST MEDIUM | | WET BULB TEMP. |
| MANUFACTURER A | TEST TEMP. | C. ☐ F. ☐ | DRY BULB TEMP. |
| ENGINEER | TECHNICIAN | INSPECTOR | |
| REF. SPEC. | | DATA SHEET NUMBER | |

JOB NUMBER _____ PAGE 19 OF TEST REPORT NO. _____

601-2
1/64

GENERAL PRECISION, INC.
LIBRASCOPE GROUP

# ENVIRONMENTAL LABORATORY DATA SHEET

TEST CONDITIONS:
IF RETEST CHECK ☐

PARAMETER CHANGE

REVERSE CURRENT #2

TEMP STEP STRESS - VENDOR A

| | $I_1$ | | $I_2$ | | $I_3$ | | $I_8$ | | $I_9$ |
|---|---|---|---|---|---|---|---|---|---|
| 81 | 7 | | 25 | | 6 | | -40 | | -126 |
| 82 | 4 | | 6 | | 8 | | -31 | | -12 |
| 83 | 1 | | 14 | | 2 | | -22 | | ~~20~~ -28 |
| 84 | 0 | | 2 | | 0 | | -2 | | -3 |
| 85 | -6 | | 9 | | -77 | | 27 | | -58 |
| 86 | 3 | | 1 | | 1 | | -16 | | -142 |
| 87 | -1 | | -101 | | 1 | | -69 | | -8 |
| 88 | 4 | | 1 | | 1 | | -13 | | -11 |
| 89 | 25 | | -19 | | 24 | | -52 | | -28 |
| 90 | 0 | | 56 | | 22 | | -81 | | -121 |
| 91 | 17 | | 6 | | -9 | | -33 | | -22 |
| 92 | 9 | | 1 | | 0 | | -31 | | -96 |
| 93 | 0 | | 1 | | 1 | | -14 | | -9 |
| 94 | 0 | | 1 | | 1 | | -3 | | -10 |
| 95 | -26 | | 18 | | 2 | | -14 | | 12 |
| 96 | 0 | | 0 | | 0 | | -5 | | -8 |
| 97 | 8 | | 26 | | 8 | | -84 | | -102 |
| 98 | 4 | | -18 | | 11 | | -5 | | -164 |
| 99 | 3 | | -19 | | -11 | | 16 | | -20 |
| 100 | 392 | | 10 | | -1 | | -6 | | -6 |

| | | | |
|---|---|---|---|
| TEST CONDUCTED FOR | | | DATE |
| TEST 240 hrs. 200°C | | SAMPLE NUMBER | BAROM. PRESS. IN. HG. |
| PART NAME & NUMBER | | TEST MEDIUM | WET BULB TEMP. |
| MANUFACTURER A | | TEST TEMP. C. ☐ F. ☐ | DRY BULB TEMP. |
| ENGINEER | TECHNICIAN | INSPECTOR | |
| REF. SPEC. | | DATA SHEET NUMBER | |

JOB NUMBER _____ PAGE 20 OF TEST REPORT NO. _____

601-2
1/64

GENERAL PRECISION, INC.
LIBRASCOPE GROUP

# ENVIRONMENTAL LABORATORY DATA SHEET

TEST CONDITIONS:
IF RETEST CHECK ☐

PARAMETER CHANGE

REVERSE CURRENT #2

TEMP STEP STRESS – VENDOR A

| | $I_1$ | | $I_2$ | | $I_3$ | | $I_8$ | | $I_9$ |
|---|---|---|---|---|---|---|---|---|---|
| 101 | 11 | | -8 | | 2 | | 1 | | -8 |
| 102 | 5 | | 48 | | 7 | | -37 | | -27 |
| 103 | 9 | | 14 | | 31 | | -24 | | -28 |
| 104 | -142 | | -3 | | 0 | | -31 | | -54 |
| 105 | -7 | | -10 | | -3 | | -46 | | -11 |
| 106 | 88 | | -69 | | 4 | | -39 | | -74 |
| 107 | -9 | | 0 | | 1 | | -10 | | -2 |
| 108 | -24 | | -3 | | -6 | | -254 | | -32 |
| 109 | 11 | | 2 | | 36 | | -7 | | -8 |
| 110 | 1 | | 2 | | 15 | | -14 | | -46 |
| 111 | -3 | | 10 | | -77 | | 36 | | -14 |
| 112 | -1 | | 1 | | 1 | | 3 | | -3 |
| 113 | -2 | | -7 | | 2 | | 47 | | 0 |
| 114 | 0 | | 6 | | 6 | | -41 | | -12 |
| 115 | -4 | | 4 | | 2 | | -18 | | -25 |

| | | | |
|---|---|---|---|
| TEST CONDUCTED FOR | | | DATE |
| TEST 200°C | | SAMPLE NUMBER | BAROM. PRESS. IN. HG. |
| PART NAME & NUMBER | | TEST MEDIUM | WET BULB TEMP. |
| MANUFACTURER A | | TEST TEMP. C. ☐ F. ☐ | DRY BULB TEMP. |
| ENGINEER | TECHNICIAN | INSPECTOR | |
| REF. SPEC. | | DATA SHEET NUMBER | |

JOB NUMBER _____ PAGE 21 OF TEST REPORT NO. _____

601-2
1/64