[redacted]

FACILITY FORM 602

N65-30844
(ACCESSION NUMBER)

(THRU)

227
(PAGES)

1
(CODE)

CR 64329
(NASA CR OR TMX OR AD NUMBER)

32
(CATEGORY)

REPUBLIC
AVIATION CORPORATION

GPO PRICE $ _____

CSFTI PRICE(S) $ _____

Hard copy (HC) 6.00

Microfiche (MF) 1.25

ff 653 July 65

RAC Report 406-5
E-FR-57-48
4 June 1965

Final Summary Report

The Determination of the Natural Modes of Vibration of the Saturn SA-5 and SA-8 Vehicles

RAC Report 406-5

Contract No. NAS 8-2646

Engineering Division
REPUBLIC AVIATION CORPORATION
Farmingdale, L.I., N.Y.

FOREWORD

This final report was prepared by S. Telles and C. J. Meissner under Contract NAS-8 - 2646 between Republic Aviation Corporation, Farmingdale, New York and the Marshall Space Flight Center, NASA, Huntsville, Alabama. The contract covers the time period 9 December 1962 through 30 June 1965.

The authors gratefully acknowledge the assistance of S. Rabinowitz, N. Levine, and R. Levy.

ABSTRACT

30844

This report contains the results of a vibration analysis performed upon the Saturn SA-5 and SA-8 vehicles.

Twenty-seven independent modes were obtained for the SA-5 and twenty-six independent modes were obtained for the SA-8. The majority of the eigenvalues lie between .10 and 4.0. This corresponds to frequencies up to 10 cps.

TABLE OF CONTENTS

			Page
Section I		Introduction	1
	II	Description of the Mathematical Model	2
	III	Program Inputs	4
		A. The Flexibility Matrix	4
		B. Formation of the Dynamic Matrix. .	19
		C. Scaling the Dynamic Matrix	21
		D. Selection of the Starting Vector .	23
	IV	Convergence Criteria	24
		A. Convergence of the Eigenvalues . .	24
		B. Convergence of the Eigenvectors. .	28
	V	Discussion of Results	30
	VI	Conclusions	33
	VII	References	77
		Appendix A Listing of Eigenvectors	A-1
		Appendix B Generalized Masses	B-1

FIGURES

Figure	Title	Page
1	Basic Dimensions of SA-5 and SA-8	64
2	Idealized Structural Components of SA-5 . . .	65
3	Component 4 - Schematic View of the Spider Beam Network Idealization	66
4	Component 13 - Upper End, 105" D. Lox Tank Idealization	66
5	Outer Thrust Structure	67
6	Component 17 - Inner Tail Barrel and Thrust Structure Idealization	68
7	Component 18 - Engine Idealization	68
8	Upper Stage Idealization of SA-8	69
9	Component 1 - Locations of Degrees of Freedom	70
10	SA-8 - Component 19 - Locations of Degrees of Freedom	71
11	Component 2 - Portion of S-IV	72
12	Component 3 - S-IV Skirt Component 4 - Spider Beam Network	72
13	Components 5 thru 12 - Peripheral Tanks . . .	73
14	Component 13 - Center Lox Tank-Upper Portion.	74

FIGURES (Cont'd.)

Figure	Title	Page
15	Component 14 - Center Lox Tank-Lower Portion .	74
16	Component 15 - Engine Degrees of Freedom . . .	75
17	Component 17 - Thrust Structure.	76

TABLES

Table	Title	Page
1a	SA-5 Rigid Body Motions & Weights	34
1b	SA-8 Rigid Body Motions & Weights	42
2a	SA-5 Eigenvalues - Run #1	43
2b	SA-5 Eigenvalues - Run #2	44
2c	SA-5 Eigenvalues - Run #3	45
3	SA-5 Modes	46
4a	SA-8 Eigenvalues - Run #1	54
4b	SA-8 Eigenvalues - Run #2	55
4c	SA-8 Eigenvalues - Run #3	56
5	SA-8 Modes	57

I. INTRODUCTION

The natural vibration modes of the SA-5 and SA-8 Saturn vehicles were obtained using the Lanzcos method of minimized iterations developed in reference 1. These vehicles were used as sample problems to determine whether the program developed from reference 1 is capable of handling large systems with closely spaced eigenvalues. The mathematical models for the two systems used 337 actual degrees of freedom for the SA-5 and 348 actual degrees of freedom for the SA-8.

Using three orthogonal starting vectors for each of the vehicles it was possible to obtain seventy eigenvalues for the SA-5 and fifty-one eigenvalues for the SA-8 that converged to within the criteria established. After an examination of the associated eigenvectors it was found that there are apparently twenty-seven independent modes for each vehicle. Of these some have doubtful convergence so that the true number of independent modes may be somewhat less. The majority of the eigenvalues are concentrated between 0.10 and 4.0.

II. DESCRIPTION OF THE MATHEMATICAL MODEL

The Saturn I vehicle dynamic characteristics are simulated by a lumped mass system where each mass point can be assigned up to six degrees of freedom. For most of the mass points only the two lateral degrees of freedom were considered. Figures 9 thru 17 show the location of each mass point and the number of degrees of freedom assigned to each mass point.

It was required to obtain the modes of the Saturn I vehicle below 10 cps. From the results of vibration surveys performed at MSFC it was felt that there would be upwards of twenty modes in this frequency range including the second bending modes of the outer tanks. Therefore, to adequately describe the Saturn I vehicle, requires the use of a large number of degrees of freedom.

For both the SA-5 and SA-8 the centerline tanks and payload were initially described by 51 mass points with two degrees of freedom per mass point in the lateral (x and y) directions plus six vertical (z) degrees of freedom. In addition the mass point associated with the thrust structure and fins (element 51) has three rotational (x', y' and z')

degrees of freedom. The inertia about the z-axis of the rest of the centerline mass was concentrated at element 176. For the SA-8 the masses of elements 1 thru 17 and 148 thru 164 and element 295 were modified to account for the difference between the SA-5 and SA-8 payloads. Also, eleven new mass stations (elements 369 thru 379) were added to the SA-8 to describe the Pegasus satellite carried by the SA-8. Several mass stations (see section III-A-1) were deleted when it was determined the masses associated with these stations were negligible in comparison with the masses of the adjacent stations.

The outer tanks were described by eleven mass points per tank with two degrees of freedom per mass point. For ease of calculating the flexibility matrix the reference axis for the outer tanks were chosen as the radial and tangential directions. The difference between the two reference systems is accounted for in the formation of the dynamic matrix as explained in Section III-B. Each engine was treated as a single mass point with six degrees of freedom per mass.

In the original analysis 22 slosh degrees of freedom were included but due to the difficulty in solving the higher

order polynomials, the structural modes could not be obtained to a sufficient degree of accuracy. Therefore, the only slosh modes retained are those associated with the O_2 of the S-IV stage. The elimination of the slosh degrees of freedom was accomplished by the method indicated in section III-A-1. The slosh mass was distributed as rigid masses to adjacent stations. Due to the formulation used in programming the free-freeing matrix it was necessary to include a unit mass for each of the slosh degrees of freedom in the mass matrix.

Eliminating the degrees of freedom mentioned above causes the dynamic matrix to have rows and columns of zeros. Therefore, as indicated in section III-A-1, the SA-5 had 337 actual degrees of freedom and the SA-8 had 348. The weights associated with these degrees of freedom are shown in table 1.

III. PROGRAM INPUTS

A. The Flexibility Matrix

The flexibility matrices of the Saturn vehicles SA-5 and SA-8 were calculated using the flexibility method of coupling redundant component structures given in reference 1. Vertical and lateral displacements and certain rotations were calculated for a finite number of mass points. The

corresponding degrees of freedom are identified in schematic diagrams.

Originally slosh degrees of freedom were included in the flexibility matrix. However, all except the S-IV lox slosh degrees of freedom were removed later, because their frequencies were much lower than the fundamental frequencies of the structure. The actual degrees of freedom numbered 337 for the SA-5 vehicle, and 348 for the SA-8 vehicle.

This section of the final report will consist of a description of the idealization of the Saturn Vehicles, suitable illustrations for the idealizations and the location of the degrees of freedom. The configuration of SA-5 and SA-8 are shown in figure 1.

The calculations were performed using the computer program of reference 2.

1. Removed Degrees of Freedom

Slosh degrees of freedom and certain others were removed by entering zero columns in the $[A_{hj}]$ force influence matrices which correspond to these degrees of

freedom. Therefore zero rows and columns appear in the final $[\gamma_{ij}]$ matrix where they correspond to the removed slosh degrees of freedom. These are numbers 24, 41, 43, 66, 78, 90, 102, 114, 126, 138, 171, 188, 201, 213, 225, 237, 249, 261, 273, 285.

Degrees of freedom 24 and 171 were not properly removed from the SA-5 $[\gamma_{ij}]$ matrix. However, the masses assigned to these degrees of freedom were very small and therefore the effect on the dynamic analysis should be negligible.

Several others were removed because no mass was assigned to them. These are 29, 30, 33, 34, 35, 36, 177, 180, 181, 182 and 183.

The order of the SA-5 matrix is 368, and 379 for the SA-8 matrix. However, the effective order due to the removal of degrees of freedom is 368-31 = 337 for SA-5 and 379-31 = 348 for SA-8.

2. <u>Structure of the SA-5</u>

Five main subregions of the structure may be considered.

(1.) Region above the spider network.

(2.) Spider network and center tank transition.

(3.) Center and outer tanks.

(4.) Thrust structure.

(5.) Engines.

3. Region 1 - Components 1, 2 and 3

The upper stages in region 1 are supported by the skirt legs of the S-IV stage skirt. These legs make contact with the spider beam network at station 960.

The flexibility of the upper stages was calculated using the moment of inertia diagrams furnished by MSFC. They were assumed to act like a beam. The section properties of the S-IV skirt were obtained from applicable drawings furnished by MSFC. The contribution of the skirt legs to the flexibility was based upon the assumption that the interface between the spider network and skirt legs remained plane and that the points of contact (assumed ball joints) remained on a circular centerline. Bending and shear rigidities were accounted for in the skirt. The axial rigidities of the legs also contributed to the bending rigidity of the skirt. Thus region 1 was idealized into the

cantilever beam representations shown in figure 2. Degrees of freedom are located as shown in figures 9, 11 and 12.

The slosh mass and mass center degrees of freedom of the oxygen in S-IV occur below station 1177.55, which is the juncture of skirt and S-IV. However, the lox tank is essentially a membrane, supported very closely to station 1177.55. Therefore, it was assumed that these degrees of freedom were located by rigid arms which are clamped to station 1177.55, and extend downward to the location of the lox degrees of freedom. This is shown schematically in figure 12, which also locates the degrees of freedom.

4. Region 2 - Components 4 and 13

a) Component 4

The spider beam network and the upper center lox tank skirt interconnect the upper stage with the tanks (Reference figure 2). The spider beam network consists of rigidly joined beams schematically shown in figure 3. Their stiffness matrices were calculated based upon the bending, shear, axial and torsional rigidities, accounting for the six degrees of freedom at each beam end. The stiffness

matrices were assembled and the result inverted using Republic Aviation Corporation computer program 64H616. The result was the flexibility matrix of the beam network.

b) Component 13 - Upper Center Lox Tank Transition

The upper end of the 105" diameter lox tank is a cylindrical shell with longerons and a heavy end ring frame. The longerons distribute the longitudinal loads received from the spider beam network and the ring frame distributes the transverse loads from the same source into the skin. The junction of this skirt and the main portion of the 105" D. lox tank was assumed to be a plane which remains plane and circular. The skin was represented as an octagonal network of 24 plates capable of carrying direct and shear stresses. This plate idealization first appeared in reference 3. The longerons were represented by 24 rod elements carrying direct stresses. The ring was represented by eight circular beam elements. Element dimensions were obtained from applicable drawings furnished by NASA-MSFC. The idealization is shown schematically in figure 4. The stiffness matrices of these elements were then assembled, and the resulting matrix inverted using the Republic Aviation Corporation

computer program 61H616.

A comparison was made of flexibilities obtained in this manner for a typical shell with those obtained using a beam type of idealization, i.e., shear and bending rigidities of the cross-sections of the shell, assuming plane sections remaining plane. The results were in good agreement. The octagonal shell idealization, however, has the additional virtue of allowing the differential longitudinal and transverse deformations of the spider support points, thus accounting for the flexible interaction with the spider beam network. Locations of the mass degrees of freedom are shown in figure 14.

5. Region 3 - Components 5 through 12 and 14

The outer tanks (components 5 through 12) and the center lox tank (component 14) were idealized as beams. Section properties were furnished by NASA-MSFC. The support points of the outer tanks were assumed to be pin joints on the spider beam lower face and the pads on the thrust structure outriggers. The nature of the connection idealization allowed free longitudinal movement for the upper connections of the fuel tanks to the spider beam network. The end rings

on the upper and lower ends of the peripheral tanks restrain the deformations in the direction of the peripheral tank diameter drawn between the two support points at each end. Therefore a rod with a flexibility equivalent to the ring diametral flexibility was assumed to connect each pair of support points. This idealization of the tank closing rings is shown in figure 5, which gives the outer thrust structure idealization. At the upper end, this stiffness is included in the axial stiffness of the cross-beams of the spider network. The center lox tank is idealized as a beam clamped to the upper tank skirt at station 887 and the inner thrust structure skirt at station 277.68. Figures 13 and 15 give the degree of freedom locations.

6. Region 4 - Components 16, 17 and 18

The thrust structure was represented by gross rigid body degrees of freedom which are located as shown in figure 17. However, the calculation of the flexibilities of the engines necessitated a detailed calculation of the thrust structure flexibility matrices, so that interaction between the tanks, thrust structure and engine support points could be accurately represented. The thrust structure, because

of its complexity, was represented by three component structures, which are inter-connected in the final solution. Component 16 comprised the thrust support and fin support outriggers (figure 5a). Component 17 comprised the lower center lox tank skirt and the tail barrel (figure 6). Component 18 consisted of the shroud support rings which support the shroud skin surrounding the outriggers, the shroud skin, the lower tank closing ring idealization, and the inner engine support beams (figure 5b).

The flexibility of the thrust structure degrees of freedom (nos. 50, 51, 197, 198, 317, 318, 319, 320, reference figure 17), was calculated by placing a load distribution on its varying components which was statically equivalent to unit loads corresponding to those degrees of freedom, weighted by the approximate mass distribution of these components.

a) Component 16 - The Outriggers

The outriggers are fixed at their inner ends to the upper and lower thrust rings of the tail barrel and to the tail barrel skin for shear in the longitudinal direction. The upper flange is restrained from lateral

movement by the diametral stiffness of the lower rings of the peripheral tanks, and the shroud upper and lower support rings. These rings connect adjacent pairs of upper flanges and lower flanges of the outriggers and support the shroud skin. The shroud skin restrains the differential longitudinal and transverse movement of the outriggers.

The outriggers were assumed to be box beams subjected to planar and transverse loads at the connection with the inner engine support beam, the outer engine gimbal, the outer engine actuator support beam, (applicable for the thrust support outriggers), the peripheral tank support points and the shroud skin and shroud skin support ring connections. The in-plane flexibilities were essentially culled from information furnished by reference 4. The transverse flexibilities were calculated using the computer program of reference 5. Appropriate section properties were obtained from reference 4 and applicable drawings furnished by MSFC.

b) Component 17 - Tail Barrel and Inner Engine Thrust Columns

The tail barrel is clamped to the center

lox tank at station 277.68. The method of idealization of the tail barrel structure was basically the same as that used for the upper skirt of the center lox tank. It comprised 32 plates, 2 frames, 8 longerons and 4 longitudinal beams (which are the thrust columns), as illustrated in figure 6. The section at which the tail barrel connects to the center lox tank is assumed to remain plane and circular. The force interchange between outer tanks and the center tank can thus lag into the center tank smoothly through the tail barrel longerons. The outriggers transmit couple forces and moments to the thrust rings in accordance with their rigid connections to them. The tail barrel skin and the thrust columns are subjected to the vertical shear in the outriggers. Vertical loads on the thrust column comprise the vertical shear forces in the fin support outriggers and the thrust of the inner engines. The vertical shear in the thrust support outriggers is sheared into the tail barrel wall. Transverse forces at the gimbals are reacted by forces on the thrust rings and a moment on the lower thrust ring. The engine (dynamic) torques are transmitted by the thrust pads of the thrust columns to the lower thrust ring.

c) Component 18 - Shroud Skin, Shroud Support Rings, Lower Tank Closing Rings and Inner Engine Support Beams

The elements of component 18, shown in figure 5a, shows the shroud skin shear panels, shroud closing ring elements, and an equivalent rod idealization of the lower tank closing rings, all of which are redundant members. The inner engine support beams are statically determinate.

The shroud rings are assumed to be rods pinned to the upper and lower outrigger flanges. The shroud skins are shear panels, subjecting the shroud support rings and the outriggers to uniform shear flow.

The inner engine support beams are cantilevered from the lower fin support outrigger flange beams. They receive loads from the inner engine turnbuckles that locate the inner engines. The inner ends of the beams are actually interconnected by a ring frame. However, the ability of this ring to support the inner beam ends was estimated to be negligibly small, and therefore the inner ends are assumed to be free to deflect.

7. Region 5 - Component 15 - Engines

The bending and torsional rigidities of the engines between the gimbal point and the section at which actuators and turnbuckles are attached to the engines were represented by a beam with torsional rigidity as shown in figure 7. The engine degrees of freedom are shown located in figure 16. The deflection characteristics of the outer engines and engine tripods were essentially deduced from test data furnished by MSFC. The inner engines were assumed to have the same rigidities (i.e., EI, GJ, AE), as the outer engines. The tripods, in the case of the outer engines were represented by equivalent beams. The actuators and locating turnbuckles were represented by rods, with rigidities reflecting data furnished by MSFC.

The outer engines were oriented at an outward slant, or gimbal angle of 6°. The inner engine centerlines were assumed to be at an angle of 0°, instead of the true 3°, because the effects on the force distributions were deemed negligible. However, the locations of the engine mass centers were located in accordance with MSFC furnished data. The true orientations of the actuators and turnbuckles were used. Thus the force influence matrices of the analysis

are essentially in accordance with the true geometry.

The attachment of the engines to the gimbals was represented by a pinned connection, which, however, was capable of transmitting torque from the engine into the gimbal pad. The ends of the actuators were assumed to be pinned joints.

THE SA-8 VEHICLE

The SA-8 Vehicle is different from the SA-5 above station 1491. Beginning at station 1491 is the service module, containing the "Pegasus" Micrometeoroid Satellite, (M.M.C.), topped by the "APOLLO" Command Module. The launch escape system, (LES), is supported by the command module at station 1851.7 (cold dimension).

With the exception of the MMC and the escape tower, the structures were represented as beams, whose flexibilities were calculated from geometric and section data furnished by MSFC. The escape tower was represented by its flexibility matrix which was calculated from deflection test data furnished by MSFC. A schematic diagram of the idealization is shown in figure 8. The structure, exclusive of the MMC,

was incorporated in Component 1 and the degree of freedom locations are shown in figure 9. It thus required a change in the flexibility matrix of component 1 of the SA-5 vehicle, and the force influence matrices $[\alpha_{mh}]$ and $[a_{hj}]_c$, where C = 1, 2, 3, 4, 13 are the designations of the affected components.

The MMC is suspended by truss-work at its lower end, near the bottom of the service module at station 1583. The upper end is supported by six radial spokes, assumed pretensioned, at station 1761. Degrees of freedom are located as shown in figure 10. The main truss work which forms the structural backbone of MMC was idealized as an equivalent beam. Rigidities of the main truss and the supporting structure were derived from data taken from reference 6. The principal axes of the structure in the horizontal plane were oriented $12^{\circ}45''$ with respect to the X-Y axis system as required, and as shown in figure 10. The MMC was therefore represented as component 19 of SA-8, a beam supported laterally by springs with rigidity equivalent to the spoke support at the top and the thruss support at the bottom. The truss support at the bottom was idealized as a vertical spring and

a rotational spring. It was assumed that the base spring support has no cross-coupling. According to this idealization of the MMC, suitable changes were affected in $[a_{hj}]_c$ where C = 1, 2, 3, 4, 13. New matrices $[\alpha_{mh}]_{19}$, $[\gamma_{\ell m}]_{19}$, $[a_{hj}]_{19}$, $[b_{ht}]_1$, and $[b_{ht}]_{19}$ were calculated as required. By adding to and/or changing the input data used for SA-5, in accordance with the above discussion, new input was obtained for computer program 64D017. The computations then yielded the required $[\gamma_{ij}]$ of the SA-8 vehicle.

B. Formation of the Dynamic Matrix

To obtain the natural frequencies and modes of the Saturn I vehicle in flight it is necessary to solve an eigenvalue problem involving the free-free dynamic matrix of the Saturn I vehicle. The form of the dynamic matrix is as follows:

$$\frac{1}{\omega^2}\{\delta\} = \left[[I] - [B][G]^{-1}[B]^T[M]\right][C][M]\{\delta\} \quad (1)$$

where

$[I]$ = Identity matrix (n x n)

$[B]$ = Matrix of rigid body modes (n x 6)

$[G]$ = $[B]^T[M][B]$ (6 x 6)

$[C]$ = Flexibility matrix

$[M]$ = Mass matrix

The mass matrices for the Saturn I SA-5 and SA-8 vehicles were obtained from data supplied by MSFC. The flexibility matrices for the two vehicles were calculated as shown in section III-A from stiffness data supplied by MSFC.

The B matrix is formed by allowing the reference point for the flexibility coefficients to have a unit displacement along each of the coordinate axes and a unit rotation about each of the coordinate axes. The motion of each mass point on the vehicle, due to the particular displacement or rotation, is then determined from the geometry of the vehicle. This can be illustrated by assuming a unit displacement along the x-axis.

For the mass points along the vehicle centerline, those that have an x degree of freedom will have a displacement of one unit. The y, z, and rotational degrees of freedom will have zero displacement and rotation due to the x motion.

The reference axes for the outer tanks are oriented in the radial and tangential directions rather than along the

x and y axes. Therefore, a displacement along the x axis causes motion in both the radial and tangential directions. The amount of motion is dependent upon the geometry of the particular tank under consideration.

The engines have the same coordinate system as the vehicle centerline. Therefore, the procedure for obtaining the engine motions are the same as for the centerline mass points.

For the rotations it is assumed that all motions are small so that the sine of the angle is the same as the angle in radians.

The rigid body motions used for the SA-5 and SA-8 are shown in table 1.

C. Scaling the Dynamic Matrix

The Lanczos method of minimized iterations required that the b_n and b_n^* vectors generated be orthogonal to each other, (i.e., $b_i \cdot b_j^* = 0$). Since a computer has a finite storage capacity it is not possible to have a flat zero dot product. In the program if $b_i \cdot b_j^* < 10^{-15}$ it is considered to be zero. NOTE: The nomenclature used in this report is

the same as was used in reference 1.

If the size of the elements of the dynamic matrix are sufficiently small it is possible for the b_n and b_n^* vectors to become very small. The orthogonality criteria can then be met even though the vectors are not orthogonal. To prevent this from occurring the dynamic matrix is scaled so that the size of the elements of the b_n and b_n^* vectors are sufficiently large to give a meaningful dot product. However, if the elements of the dynamic matrix are too large it is possible to exceed the range of the computer in the other direction.

From the form of the b_n vectors it is possible to show how the size of the vectors is dependent upon the dynamic matrix.

This is shown as follows:

$$b_1 = (A-\alpha_o)b_o$$

$$b_2 = (A-\alpha_1)b_1 - \alpha_o b_o$$

$$= (A^2-\alpha_1 A-\alpha_o A + \alpha_1\alpha_o) - \beta_o b_o$$

$$b_3 = (A-\alpha_2)b_2 - \beta_1 b_1$$

$$= (A^3-\alpha_o A^2 - \alpha_1 A^2 + \alpha_1\alpha_o A + \alpha_o\alpha_2 A + \alpha_1\alpha_2 A)$$

$$+\alpha_1\alpha_2\alpha_o)\, b_o - \beta_1 (A-\alpha_o)b_o$$

$$b_n = (A^n - \alpha_o A^{n-1} + \ldots .)b_o$$

It can be seen that as n becomes sufficiently large the size of the b_n vectors is dependent upon the matrix raised to the nth power and the initial starting vector b_o.

From the above it can be seen that if the dynamic matrix is scaled so that the product $A^n b_o$ is approximately of unit length the b_n vectors can be kept to a reasonable size. The same holds true of the b_n^* vectors. It has been found from experience that if the dynamic matrix is scaled so that the largest element is approximately unity the size of the b_n and b_n^* vectors can be maintained for upwards of thirty iterations. For the Saturn problem it was possible to obtain as many as 25 roots from this number of iterations for a given initial vector.

D. Selection of the Starting Vector

The starting vector can be considered as a forcing function applied to the Saturn I vehicle. Using this analogy it was first thought that by selecting a vector that would excite a majority of the vehicle modes the machine time could

be kept to a minimum. However, due to the large number of eigen-values present within a narrow range, the convergence of the eigen-values was very slow. In addition, the number of iterations required to separate out the many eigen-values contained within the frequency band made it all but impossible to keep the b_n and b_n^* vectors sufficiently large to be meaningful. Also, due to the closeness of the roots, two roots can show up as complex conjugates because the polynomial can not be defined properly in a particular region.

In order to overcome this difficulty it was decided to excite the vehicle with a set of starting vectors which would favor the modes in each of three directions separately. The starting vectors chosen were a unit displacement at the center of gravity of the thrust structure in the x and y directions (mass points 51 and 198 respectively) and a unit rotation at the same point (mass point 320). These vectors were chosen as being the most likely to excite the central tank modes as well as the modes associated with the outer tanks.

IV. CONVERGENCE CRITERIA

A. Convergence of the Eigen-values

The Lanczos method of minimized iterations develops the characteristic polynomial of a given dynamic matrix in a step by step manner. As the number of iterations increase the polynomial more closely approximates the actual characteristic equation until after n iterations, where n x n is the order of the dynamic matrix, the characteristic equation is exact.

For large systems such as the Saturn I the time necessary to develop the exact characteristic equation is prohibitive. In addition, due to the finite capacity of the computer, it becomes exceedingly difficult to maintain the accuracy required for systems the size of the Saturn I. Fortunately for most practical problems it is necessary to obtain only a limited number of eigen-values. These can be obtained from the approximate polynomials with sufficient accuracy for practical applications.

In the present problem it was felt an accuracy of 10^{-3} on the convergence of the eigen-values would be sufficient. To determine whether or not a root has converged the polynomial associated with each iteration is solved and the roots are compared with the roots of the

previous iteration. Then if

$$\left| \frac{XN}{XNMI} - 1 \right| < .001$$

where

XN = root of the nth iteration

XNMI = root of the (n-1) iteration

the root is said to have converged.

For a problem where the number of roots desired are known the program will perform the convergence check internally. For the Saturn I the calculation was performed externally since there was no way of knowing in advance how many eigen-values are required.

One of the difficulties encountered in obtaining the eigen-values is the solution of the higher order polynomials. The method presently being used in the program is a triple precision sub-routine based upon Muller's method. This procedure has successfully solved polynomials of up to the 40th degree. It has the disadvantage of using a great deal of machine time for the higher order polynomials. To overcome this disadvantage a Newton-Raphson procedure was in-

corporated where the solution of the n-1 polynomial was used as a first approximation of the nth polynomial. This procedure became numerically unstable at n = 20 and was discarded.

The roots obtained for the Saturn I, SA-5 and SA-8 using the convergence criteria described above are shown in tables 2 and 4 for each of three different initial vectors. The tables indicate the iteration (N) at which the convergence criteria are satisfied, the eigenvalue (XN), the degree of convergence, and the frequency associated with the eigenvalue.

For a simple system where the roots are fairly well separated when a root appears each succeeding iteration causes the root to converge more closely to its final value A system such as the Saturn I has many eigenvalues closely spaced. It is possible for a root to appear and converge, so that the criteria for convergence is satisfied, then be displaced as other roots appear. The original root may then reappear and converge to a slightly different value at a higher iteration.

Since the Saturn I has a great many roots closely spaced, it is difficult to determine which roots are truly independent. This can only be evaluated by an examination of the associated eigenvectors. Section V contains a discussion of this evaluation.

B. Convergence of the Eigenvectors

From reference 1 it can be seen the eigenvectors are formed by means of a finite series as follows,

$$U_i = \frac{b_o}{\sigma_o} + p_i(\mu_i)\frac{b_1}{\sigma_1} + p_2(\mu_i)\frac{b_2}{\sigma_2} + \cdots + P_{m-1}(\mu_i)\frac{b_{m-1}}{\sigma_{m-1}}$$

where,

U_i = i^{th} eigenvector

b_m = orthogonal vectors generated in Lanczos procedure

$p_r(\mu_i)$ = r^{th} polynomial evaluated for the ith root.

σ_k = $b_k \cdot b_k^*$

From the form of the eigenvectors it can be seen that when the root converges the polynomial is satisfied and the succeeding terms of the series are theoretically zero. However, with a finite capacity computer the root is never exact. For a practical computer the root can be considered as,

$$(\mu_i + \Delta\mu_i)$$

this is then substituted into a polynomial,

$$X^m + A_{m-1}X^{m-1} + \ldots + A_o = 0$$

so that the first term has the form,

$$(\mu_i + \Delta\mu_i)^m = \mu_i^m + \mu_i^{m-1}\Delta\mu_i + \ldots$$

From the above it can be seen that, as the order of the polynomial increases, if the root is greater than unity, a small error in the root can cause the series to diverge. The method used to overcome this difficulty is to truncate the series at the point where the root first converges. The errors introduced by the higher order polynomials are thus minimized.

The program has been written so that the root and the iteration at which the root converges can be specified as input. The means of determining the root convergence and the iteration number is described in section V.

V. DISCUSSION OF RESULTS

The results of all the runs for both the SA-5 and SA-8 have been summarized in tables 2 thru 5. Tables 2 and 4 show the number of eigenvalues that have converged in each run, the iteration number at which convergence occurred, the eigenvalue, the degree of convergence, and the frequency in cycles per second. The frequency is calculated from the following expression,

$$f_n = \frac{1}{2\pi} \sqrt{\frac{(SF)_1 \; g \; (SF)_2}{XN}}$$

where

f_n = natural frequency

$(SF)_1$ = Scale factor used in obtaining the flexibility matrix (10^{12})

$(SF)_2$ = Scale factor used to scale dynamic matrix (10^{-12})

XN = eigenvalue

g = gravity constant (386.4)

Tables 3 and 5 show the mode number, the eigenvalue, the frequency in cycles per second, the run number in which the eigenvalue appears and a brief description of the mode. It should be noted that the description includes only the major motion in the mode.

An examination of the SA-5 results (tables 2 and 3) shows that while there were a total of 70 eigenvalues that converged in all three runs to the established tolerance of .001, only 27 can be considered as independent. In those cases where a greater tolerance was accepted it was usually found that the mode had not fully converged. In many instances an eigenvalue would converge at an early iteration then disappear and reconverge at a later iteration to a somewhat different value. In one instance, table 2c numbers 13 and 14, the eigenvalues are considerably different between the early converged value and the later converged value.

For a given run it is possible to obtain the generalized masses associated with each mode. Using the criteria that

$$\left| \frac{M_{ii} M_{jj} - M_{ij}^{2}}{M_{ii} M_{jj}} - 1 \right| < .001$$

where

M_{ii}, M_{jj} = Diagonal elements of generalized mass matrix

M_{ij} = Associated off diagonal elements

it is possible to determine within a given run which eigenvectors are truly independent. However, this program has

not been developed to check eigenvectors from different runs. The checking of eigenvectors from different runs was accomplished by visual inspection of the modes. See Appendix B.

It should be noted that when a strong mode exists, such as the slosh modes, it will usually converge early. Also, when a mode is favored by a particular starting vector it will usually only show up in the run associated with that vector. This can best be shown by modes 18 and 19 (table 3) which are the first bending modes of the center line elements in the X and Y directions respectively. These modes are only excited by the starting vectors associated with the X and Y directions (runs 1 and 2). Further proof can be found by examining the modes which are basically torsion (table 3, modes 17, 20, 25, 26 and 27), these occur only in run #3 which has a torsional starting vector.

The modes of the SA-8 exhibit the same characteristics as that of the SA-5. Mode 4, table 5 was inadvertently called an independent mode. The eigenvalues of the SA-8 seemed to converge later than those of the SA-5 so that only 51 converged eigenvalues were obtained for the three runs.

One more mode was obtained for the SA-5 than for the SA-8 but the modes seem similar in nature. The mode that is non-converged between modes 6 and 7 (table 5) may be the missing mode.

An attempt was made to take SA-5 run #3 and obtain more eigenvalues but the method became numerically unstable so that the roots became complex conjugates. It would seem that the limitation to the method, for the size system used for the Saturn, is the inability to maintain stability past approximately 27 iterations. It should be noted that the majority of the eigenvalues lie between .1 and 4.0.

VI. CONCLUSIONS

1. By judicious choice of starting vectors it is possible to separate eigenvalues close to each other.

2. The method becomes unstable after about 27 iterations.

3. An examination of the generalized mass matrix will determine the independence of the eigenvectors.

PREPARED
CHECKED
REVISED

REPUBLIC AVIATION

TABLE 1a.

SA-5 RIGID BODY MOTIONS & WEIGHTS

REPORT NO.
MODEL

1	2	3	4	5	6	7	8	9	10	11	12	13	14	15	16	17	18	19	20	21
	DEGREE OF FREEDOM	WEIGHT	Z	θ_Z	X	θ_X	Y	θ_Y			DEGREE OF FREEDOM	WEIGHT	Z	θ_Z	X	θ_X	Y	θ_Y		
	1	37.0	0	0	1.0	0	0	1056.0			26	2627.0	0	0	1.0	0	0	364.125		
	2	91.0						1040.625			27	3258.0			1.0			333.375		
	3	207.0						1009.875			28	6211.0			1.0			302.625		
	4	345.0						979.125			29	1.0			0			0		
	5	393.0						948.375			30	1.0			0			0		
	6	202.0						917.625			31	24016.0			1.0			250.5		
	7	217.0						886.875			32	71176.0			1.0			228.25		
	8	5615.0						856.125			33	1.0			0			0		
	9	9580.0						825.375			34	1.0								
	10	356.0						794.625			35	1.0								
	11	425.0						763.875			36	1.0			0			0		
	12	393.0						733.125			37	5742.0			1.0			22.0		
	13	440.0						702.375			38	15069.0						62.0		
	14	390.0						671.625			39	1420.0						-25.8		
	15	626.0						640.875			40	14359.0			1.0			-55.7		
	16	2117.0						610.125			41	1.0			0			0		
	17	2413.0						579.375			42	10346.0			1.0			-82.0		
	18	1152.0						548.625			43	16684.0						-115.5		
	19	589.0						517.875			44	21123.0						-175.3		
	20	1403.0						487.125			45	23639.0						-235.1		
	21	3076.0						456.375			46	27924.0						-308.04		
	22	3218.0						425.625			47	30830.0						-394.12		
	23	2262.0			1.0			394.875			48	30598.0						-480.2		
	24	1.0			0			0			49	29853.0						-566.28		
	25	1910.0	0	0	1.0	0	0	412.7			50	23610.0	0	0	1.0	0	0	-652.36		

PREPARED
CHECKED
REVISED

REPUBLIC AVIATION

TABLE 1 (CONT)
SA-5 RIGID BODY MOTIONS & WEIGHTS

REPORT NO.
MODEL

1	2	3	4	5	6	7	8	9	10	11	12	13	14	15	16	17	18	19	20	21
	DEGREE OF FREEDOM	WEIGHT	Z	θ_Z	X	θ_X	Y	θ_Y			DEGREE OF FREEDOM	WEIGHT	Z	θ_Z	X	θ_X	Y	θ_Y		
	51	34682.0	0	0	1.0	0	0	-771.4			76	983.0	0	0	-.92388	5.606	-.38268	-13.535		
	52	983.0			.92388	-5.606	.38268	13.535			77	2737.0			-.92388	-22.980	-.38268	55.479		
	53	2737.0			.92388	22.980	.38268	-55.479			78	1.0			0	0	0	0		
	54	1.0			0	0	0	0			79	4434.0			-.92388	-24.109	-.38268	58.204		
	55	4434.0			.92388	24.109	.38268	-58.204			80	6893.0				-51.566		124.493		
	56	6893.0				51.566		-124.493			81	8717.0				-80.152		193.507		
	57	8717.0				80.152		-193.507			82	8424.0				-109.121		263.444		
	58	8424.0				109.121		-263.444			83	8820.0				-137.325		331.534		
	59	8820.0				137.325		-331.534			84	8357.0				-165.911		400.548		
	60	8357.0				165.911		-400.548			85	8898.0				-194.497		469.562		
	61	8898.0				194.497		-469.562			86	7872.0				-223.083		538.576		
	62	7872.0				223.083		-538.576			87	2548.0			-.92388	-251.670	-.38268	607.590		
	63	2548.0			.92388	251.670	.38268	-607.590			88	1032.2			.38268	13.535	-.92388	5.606		
	64	1032.2			-.38268	-13.535	.92388	-5.606			89	2873.8			.38268	-55.479	-.92388	-22.980		
	65	2873.8			-.38268	55.479	.92388	22.980			90	1.0			0	0	0	0		
	66	1.0			0	0	0	0			91	4655.7			.38268	-58.204	-.92388	-24.109		
	67	4655.7			-.38268	58.204	.92388	24.109			92	7237.6				-124.493		-51.566		
	68	7237.6				124.493		51.566			93	9152.8				-193.507		-80.152		
	69	9152.8				193.507		80.152			94	8845.2				-263.444		-109.121		
	70	8845.2				263.444		109.121			95	9261.0				-331.534		-137.325		
	71	9261.0				331.534		137.325			96	8774.8				-400.548		-165.911		
	72	8774.8				400.548		165.911			97	9342.9				-469.562		-194.497		
	73	9342.9				469.562		194.497			98	8265.6				-538.576		-223.083		
	74	8265.6				538.576		223.083			99	2675.4			.38268	-607.590	-.92388	-251.670		
	75	2675.4	0	0	-.38268	607.590	.92388	251.670			100	2062.0	0	0	.92388	5.606	-.38268	13.535		

PREPARED
CHECKED
REVISED

REPUBLIC AVIATION

TABLE 1a. (CONT.)

SA-5 RIGID BODY MOTIONS & WEIGHTS

REPORT NO.
MODEL

1	2	3	4	5	6	7	8	9	10	11	12	13	14	15	16	17	18	19	20	21
	DEGREE OF FREEDOM	WEIGHT	Z	θ_Z	X	θ_X	Y	θ_Y			DEGREE OF FREEDOM	WEIGHT	Z	θ_Z	X	θ_X	Y	θ_Y		
	101	5820.0	0	0	.92388	-22.980	-.38268	-55.479			126	1.0	0	0	0	0	0	0		
	102	1.0			0	0	0	0			127	6202.0			-.92388	24.109	.38268	58.204		
	103	6202.0			.92388	-24.109	-.38268	-58.204			128	9977.0				51.566		124.493		
	104	9977.0				-51.566		-124.493			129	11652.0				80.152		193.507		
	105	11652.0				-80.152		-193.507			130	11868.0				109.121		263.444		
	106	11868.0				-109.121		-263.444			131	11726.0				137.325		331.534		
	107	11726.0				-137.325		-331.534			132	12484.0				165.911		400.548		
	108	12484.0				-165.911		-400.548			133	11424.0				194.497		469.562		
	109	11424.0				-194.497		-469.562			134	11642.0				223.083		538.576		
	110	11642.0				-223.083		-538.576			135	4299.0			-.92388	251.670	.38268	607.590		
	111	4299.0			.92388	-251.670	-.38268	-607.590			136	2165.1			-.38268	13.535	-.92388	-5.606		
	112	2165.1			.38268	-13.535	.92388	5.606			137	6111.0			-.38268	-55.479	-.92388	22.980		
	113	6111.0			.38268	55.479	.92388	-22.980			138	1.0			0	0	0	0		
	114	1.0			0	0	0	0			139	6512.1			-.38268	-58.204	-.92388	24.109		
	115	6512.1			.38268	58.204	.92388	-24.109			140	10475.8				-124.493		51.566		
	116	10475.8				124.493		-51.566			141	12234.6				-193.507		80.152		
	117	12234.6				193.507		-80.152			142	12461.4				-263.444		109.121		
	118	12461.4				263.444		-109.121			143	12312.3				-331.534		137.325		
	119	12312.3				331.534		-137.325			144	13108.2				-400.548		165.911		
	120	13108.2				400.548		-165.911			145	11995.2				-469.562		194.497		
	121	11995.2				469.562		-194.497			146	12224.0				-538.576		223.083		
	122	12224.0				538.576		-223.083			147	4514.0			-.38268	-607.590	-.92388	251.670		
	123	4514.0			.38268	607.590	.92388	-251.670			148	37.0			0	-1056.0	1.0	0		
	124	2062.0			-.92388	-5.606	.38268	-13.535			149	91.0			0	-1040.625	1.0	0		
	125	5820.0	0	0	-.92388	22.980	.38268	55.479			150	207.0	0	0	0	-1009.875	1.0	0		

PREPARED
CHECKED
REVISED

REPUBLIC AVIATION

TABLE 1a. (CONT.)

SA-5 RIGID BODY MOTIONS & WEIGHTS

REPORT NO.
MODEL

1	2	3	4	5	6	7	8	9	10	11	12	13	14	15	16	17	18	19	20	21
	DEGREE OF FREEDOM	WEIGHT	Z	θ_Z	X	θ_X	Y	θ_Y			DEGREE OF FREEDOM	WEIGHT	Z	θ_Z	X	θ_X	Y	θ_Y		
	151	345.0	0	0	0	-979.125	1.0	0			176	14791148.0	0	1.0	0	0	0	0		
	152	393.0				-948.375					177	1.0		0		0	0			
	153	202.0				-917.625					178	26417.6				-250.5	1.0			
	154	217.0				-886.975					179	71176.0				-228.25	1.0			
	155	5615.0				-856.125					180	1.0				0	0			
	156	7580.0				-825.375					181	1.0								
	157	356.0				-794.625					182	1.0								
	158	425.0				-763.875					183	1.0				0	0			
	159	393.0				-733.125					184	5742.0				-22.0	1.0			
	160	445.0				-702.375					185	15069.0				-62.0				
	161	390.0				-671.625					186	1420.0				25.8				
	162	626.0				-640.875					187	14359.0				55.7	1.0			
	163	2117.0				-610.125					188	1.0				0	0			
	164	2413.0				-579.375					189	10346.0				82.0	1.0			
	165	1152.0				-548.625					190	16684.0				115.5				
	166	589.0				-517.875					191	21123.0				175.3				
	167	1403.0				-487.125					192	23639.0				235.1				
	168	3076.0				-456.375					193	27924.0				308.04				
	169	3218.0				-425.625					194	30830.0				394.12				
	170	2262.0				-394.875	1.0				195	30598.0				480.2				
	171	1.0				0	0				196	29853.0				566.28				
	172	1910.0				-412.7	1.0				197	23610.0				652.36				
	173	2627.0				-364.125					198	34682.0		0	0	771.4	1.0	0		
	174	3258.0				-333.375					199	983.0		101.2	-.38268	-13.535	.92388	-5.606		
	175	6211.0	0	0	0	-302.625	1.0	0			200	2737.0	0	101.2	-.38268	55.479	.92388	22.980		

PREPARED
CHECKED
REVISED

REPUBLIC AVIATION

TABLE 1a. (CONT.)

SA-5 RIGID BODY MOTIONS & WEIGHTS

1	2	3	4	5	6	7	8	9	10	11	12	13	14	15	16	17	18	19	20	21
	DEGREE OF FREEDOM	WEIGHT	Z	θ_Z	X	θ_X	Y	θ_Y			DEGREE OF FREEDOM	WEIGHT	Z	θ_Z	X	θ_X	Y	θ_Y		
	201	1.0	0	0	0	0	0	0			226	4434.0	0	101.2	.38268	-58.204	-.92388	-24.109		
	202	4434.0		101.2	-.38268	58.204	.92388	24.109			227	6893.0				-124.493		-51.566		
	203	6893.0				124.493		51.566			228	8717.0				-193.507		-80.152		
	204	8717.0				193.507		80.152			229	8424.0				-263.444		-109.121		
	205	8424.0				263.444		109.121			230	8820.0				-331.534		-137.325		
	206	8820.0				331.534		137.325			231	8357.0				-400.548		-165.911		
	207	8357.0				400.548		165.911			232	8898.0				-469.562		-194.497		
	208	8898.0				469.562		194.497			233	7872.0				-538.576		-223.083		
	209	7872.0				538.576		223.083			234	2548.0			.38268	-607.590	-.92388	-251.670		
	210	2548.0			-.38268	607.590	.92388	251.670			235	1032.2			.92388	- 5.606	.38268	13.535		
	211	1032.2			-.92388	5.606	-.38268	-13.535			236	2873.8		101.2	.92388	22.980	.38268	-55.479		
	212	2873.8		101.2	-.92388	-22.980	-.38268	55.479			237	1.0		0	0	0	0	0		
	213	1.0		0	0	0	0	0			238	4655.7		101.2	.92388	24.109	.38268	-58.204		
	214	4655.7		101.2	-.92388	-24.109	-.38268	58.204			239	7237.6				51.566		-124.493		
	215	7237.6				-51.566		124.493			240	9152.8				80.152		-193.507		
	216	9152.8				-80.152		193.507			241	8845.2				109.121		-263.444		
	217	8845.2				-109.121		263.444			242	9261.0				137.325		-331.534		
	218	9261.0				-137.325		331.534			243	8774.8				165.911		-400.548		
	219	8774.8				-165.911		400.548			244	9342.9				194.497		-469.562		
	220	9342.9				-194.497		469.562			245	8265.6				223.083		-538.576		
	221	8265.6				-223.083		538.576			246	2675.4			.92388	251.670	.38268	-607.590		
	222	2675.4			-.92388	-251.670	-.38268	607.590			247	2062.0			.38268	-13.535	.92388	5.606		
	223	983.0			.38268	13.535	-.92388	5.606			248	5820.0		101.2	.38268	55.479	.92388	-22.980		
	224	2737.0		101.2	.38268	-55.479	-.92388	-22.980			249	1.0		0	0	0	0	0		
	225	1.0	0	0	0	0	0	0			250	6202.0	0	101.2	.38268	58.204	.92388	-24.109		

PREPARED
CHECKED
REVISED

TABLE 10 (CONT.)

SA-5 RIGID BODY MOTIONS & WEIGHTS

REPORT NO.
MODEL

1	2	3	4	5	6	7	8	9	10	11	12	13	14	15	16	17	18	19	20	21
	DEGREE OF FREEDOM	WEIGHT	Z	θ_Z	X	θ_X	Y	θ_Y			DEGREE OF FREEDOM	WEIGHT	Z	θ_Z	X	θ_X	Y	θ_Y		
	251	9977.0	0	101.2	.38268	124.493	.92388	-51.566			276	11652.0	0	101.2	-.38268	-193.507	-.92388	80.152		
	252	11652.0				193.507		-80.152			277	11868.0				-263.444		109.121		
	253	11868.0				263.444		-109.121			278	11726.0				-331.534		137.325		
	254	11726.0				331.534		-137.325			279	12484.0				-400.548		165.911		
	255	12484.0				400.548		-165.911			280	11424.0				-469.562		194.497		
	256	11424.0				469.562		-194.497			281	11642.0				-538.576		223.083		
	257	11642.0				538.576		-223.083			282	4299.0			-.38268	-607.590	-.92388	251.670		
	258	4299.0			.38268	607.590	.92388	-251.670			283	2165.1			.92388	5.606	-.38268	13.535		
	259	2165.1			-.92388	-5.606	.38268	-13.535			284	6111.0		101.2	.92388	-22.980	-.38268	-55.479		
	260	6111.0		101.2	-.92388	22.980	.38268	55.479			285	1.0		0	0	0	0	0		
	261	1.0		0	0	0	0	0			286	6512.1		101.2	.92388	-24.109	-.38268	-58.204		
	262	6512.1		101.2	-.92388	24.109	.38268	58.204			287	10475.8				-51.566		-124.493		
	263	10475.8				51.566		124.493			288	12234.6				-80.152		-193.507		
	264	12234.6				80.152		193.507			289	12461.4				-109.121		-263.444		
	265	12461.4				109.121		263.444			290	12312.3				-137.325		-331.534		
	266	12312.3				137.325		331.534			291	13108.2				-165.911		-400.548		
	267	13108.2				165.911		400.548			292	11995.2				-194.497		-469.562		
	268	11995.2				194.497		469.562			293	12224.0				-223.083		-538.576		
	269	12224.0				223.083		538.576			294	4514.0	0	101.2	.92388	-251.670	-.38268	-607.590		
	270	4514.0			-.92388	251.670	.38268	607.590			295	19317.0	1.0	0	0	0	0	0		
	271	2062.0			-.38268	13.535	-.92388	-5.606			296	4530.0								
	272	5820.0		101.2	-.38268	-55.479	-.92388	22.980			297	102028.0								
	273	1.0		0	0	0	0	0			298	14515.0								
	274	6202.0		101.2	-.38268	-58.204	-.92388	24.109			299	26286.0								
	275	9977.0	0	101.2	-.38268	-124.493	-.92388	51.566			300	224796.0	1.0	0	0	0	0	0		

PREPARED
CHECKED
REVISED

REPUBLIC AVIATION

TABLE 1a. (CONT.)

SA-5 RIGID BODY MOTIONS & WEIGHTS

REPORT NO.
MODEL

1	2	3	4	5	6	7	8	9	10	11	12	13	14	15	16	17	18	19	20	21
	DEGREE OF FREEDOM	WEIGHT	Z	θ_Z	X	θ_X	Y	θ_Y			DEGREE OF FREEDOM	WEIGHT	Z	θ_Z	X	θ_X	Y	θ_Y		
	301	3624.0	1.0	0	0	38.7	0	-93.5			326	1663851.0	0	0	0	0	0	1.0		
	302	65543.0				38.7		-93.5			327	2137.5	1.0	0	0	72.6	0	64.2		
	303	3624.0				93.5		38.7			328	2137.5	0	-64.2	0	818.2	1.0	0		
	304	65543.0				93.5		38.7			329	2137.5		72.6	-1.0	0	0	818.2		
	305	3624.0				-38.7		93.5			330	933681.0		1.0	0	0		0		
	306	65543.0				-38.7		93.5			331	1949485.0		0		0		1.0		
	307	3624.0				-93.5		-38.7			332	1663851.0	0	0		-1.0		0		
	308	65543.0				-93.5		-38.7			333	2137.5	1.0	0	0	-64.2		72.6		
	309	4083.0				-38.7		-93.5			334	2137.5	0	-64.2	-1.0	0	0	818.2		
	310	95556.0				-38.7		-93.5			335	2137.5		72.6	0	-818.2	-1.0	0		
	311	4083.0				93.5		-38.7			336	933681.0		1.0		0	0	0		
	312	95556.0				93.5		-38.7			337	1949485.0		0		-1.0		0		
	313	4083.0				38.7		93.5			338	1663851.0	0	0		0		-1.0		
	314	95556.0				38.7		93.5			339	2137.5	1.0	0		-72.6	0	-64.2		
	315	4083.0				-93.5		38.7			340	2137.5	0	-64.2	0	-818.2	-1.0	0		
	316	95556.0				-93.5		38.7			341	2137.5		72.6	1.0	0	0	-818.2		
	317	34682.0	1.0			0		0			342	933681.0		1.0	0	0		0		
	318	316798000.0	0			1.0		0			343	1949485.0		0	0	0		-1.0		
	319	316798000.0	0	0		0		1.0			344	1663851.0		0	0	1.0		0		
	320	776884000.0	0	1.0		0		0			345	1632.0		2.2	1.0	0	0	-812.5		
	321	2137.5	1.0	0	0	64.2		-72.6			346	1632.0	0	41.7	0	812.5	1.0	0		
	322	2137.5	0	-64.2	1.0	0	0	-818.2			347	1632.0	1.0	0		-2.2	0	-41.7		
	323	2137.5		72.6	0	818.2	1.0	0			348	1334911.0	0	0		1.0		0		
	324	933681.0		1.0	0	0	0	0			349	901272.0	0	0		0		1.0		
	325	1949485.0	0	0	0	1.0	0	0			350	601680.0	0	1.0	0	0	0	0		

PREPARED
CHECKED
REVISED

REPUBLIC AVIATION

TABLE 1a. (CONT.)

SA-5 RIGID BODY MOTIONS & WEIGHTS

REPORT NO.
MODEL

1	2	3	4	5	6	7	8	9	10	11	12	13	14	15	16	17	18	19	20	21
	DEGREE OF FREEDOM	WEIGHT	Z	θ_Z	X	θ_X	Y	θ_Y												
	351	1632.0	0	2.2	0	812.5	1.0	0												
	352	1632.0	0	41.7	-1.0	0	0	812.5												
	353	1632.0	1.0	0	0	41.7		-2.2												
	354	1334911.0	0	0		0		1.0												
	355	901272.0		0		-1.0		0												
	356	601620.0		1.0	0	0		0												
	357	1632.0		2.2	-1.0	0	0	812.5												
	358	1632.0	0	41.7	0	-812.5	-1.0	0												
	359	1632.0	1.0	0		2.2	0	41.7												
	360	1334911.0	0	0		-1.0		0												
	361	901272.0		0		0		-1.0												
	362	601620.0		1.0		0	0	0												
	363	1632.0		2.2	0	-812.5	-1.0	0												
	364	1632.0	0	41.7	1.0	0	0	-812.5												
	365	1632.0	1.0	0	0	-41.7		2.2												
	366	1334911.0	0	0		0		-1.0												
	367	901272.0	0	0		1.0		0												
	368	601620.0	0	1.0	0	0	0	0												

PREPARED
CHECKED
REVISED

REPUBLIC AVIATION

TABLE 1b.

SA-8 RIGID BODY MOTIONS & WEIGHTS

REPORT NO.
MODEL

1	2	3	4	5	6	7	8	9	10	11	12	13	14	15	16	17	18	19	20	21
	DEGREE OF FREEDOM	WEIGHT	Z	θ_Z	X	θ_X	Y	θ_Y			DEGREE OF FREEDOM	WEIGHT	Z	θ_Z	X	θ_X	Y	θ_Y		
	1	313.2	0	0	1.0	0	0	1341.7			155	220.5	0	0	0	-1014.7	1.0	0		
	2	558.2						1276.7			156	450.2				- 981.7				
	3	391.5						1220.7			157	839.6				- 964.7				
	4	452.4						1160.7			158	954.4				- 930.0				
	5	234.1						1106.7			159	3333.7				- 896.7				
	6	419.9						1084.7			160	1577.7				- 856.0				
	7	153.0						1048.7			161	1641.5				- 785.0				
	8	220.5						1014.7			162	1788.5				- 722.0				
	9	450.2						981.7			163	1394.9				- 650.0				
	10	839.6						964.7			164	562.1	0	0	0	-598.7	1.0	0		
	11	954.4						930.0												
	12	3333.7						896.7			295	15285.7	1.0	0	0	0	0	0		
	13	1577.7						856.0												
	14	1641.5						785.0			369	382.8	0	0	.97534	- 192.9	.22070	852.4		
	15	1788.8						722.0			370	698.6				- 181.9		804.0		
	16	1394.9						650.0			371	659.1				- 173.1		765.0		
	17	562.1	0	0	1.0	0	0	598.7			372	740.0				- 164.3		725.0		
											373	683.0			.97534	- 153.7	.22070	679.1		
	148	313.2	0	0	0	-1341.7	1.0	0			374	382.8			-.22070	- 852.4	.97534	- 192.9		
	149	558.2				-1276.7					375	698.6				- 804.0		- 181.9		
	150	391.5				-1220.7					376	659.1				- 765.0		- 173.1		
	151	452.4				-1160.7					377	740.0				- 725.9		- 164.3		
	152	234.1				-1106.7					378	683.0	0		-.22070	- 679.1	.97534	- 153.7		
	153	419.9				-1084.7					379	3163.5	1.0	0	0	0	0	0		
	154	153.0	0	0	0	-1048.7	1.0	0												

TABLE 2a

SA-5 EIGENVALUES

Run #1 - Element #51

Mode No.	N	XN	Convergence	f_n
1	11	30.86438	0	.56492
2	6	28.09667	0	.59209
3	25	3.591662	.000014	1.656026
4	19	3.487810	.000088	1.680499
5	23	3.335514	.000022	1.718437
6	16	3.334737	.000089	1.718635
7	25	3.270767	.000014	1.735360
8	6	3.173972	.000252	1.761638
9	16	3.142010	.000012	1.770561
10	26	3.127286	.001112	1.774723
11	24	3.027156	.000987	1.803836
12	24	2.417463	.000039	2.018529
13	17	2.392992	.000720	2.028824
14	24	2.382129	.000019	2.033443
15	26	1.830392	.000004	2.319759
16	18	1.828028	.000123	2.321256
17	26	1.791688	.000070	2.344678
18	24	1.049099	.000051	3.064123
19	19	.5868233	.000332	4.096965
20	26	.5840905	.000562	4.106493
21	26	.3590616	.000126	5.237585
22	19	.3567154	.000846	5.254736

TABLE 2b

SA-5 EIGENVALUES

Run #2 - Element #198

Mode No.	N	XN	Convergence	f_n
1	7	30.86438	0	.56492
2	11	28.09667	0	.59209
3	20	3.486362	0	1.680848
4	15	3.486115	0	1.680906
5	15	3.276448	.000001	1.733856
6	24	3.272423	.000009	1.734923
7	15	3.166736	.000008	1.763634
8	24	3.144373	0	1.769838
9	20	3.133650	.000165	1.772921
10	24	3.018287	.000039	1.806484
11	24	2.417426	.000001	2.018542
12	15	2.409637	0	2.021802
13	24	2.381943	.000003	2.033524
14	24	1.829816	.000011	2.320120
15	24	1.791427	.000001	2.344848
16	24	1.046448	.000006	3.068001
17	15	.7824508	.000206	3.548000
18	21	.6314452	.000126	3.949528
19	24	.6306326	.000808	3.952095
20	24	.3895338	.000067	5.028567
21	21	.3894731	.000217	5.028954
22	18	.3876284	.000325	5.040876
23	15	.2410509	.000167	6.392358

TABLE 2c

SA-5 EIGENVALUES

Run #3 - Element #320

Mode No.	N	XN	Convergence	f_n
1	10	30.86438	0	.56492
2	10	28.09667	0	.59209
3	26	3.591900	.000006	1.655975
4	26	3.485068	.000032	1.681159
5	16	3.469382	.000099	1.684957
6	14	3.457256	.000034	1.687907
7	26	3.440089	.000430	1.692115
8	26	3.326033	.000020	1.720884
9	14	3.171768	.000030	1.762235
10	26	3.143391	.000044	1.770172
11	26	3.009716	.000230	1.809054
12	24	2.385318	.0000239	2.032083
13	24	1.885757	.0000016	2.285449
14	14	1.707959	.000761	2.401463
15	21	1.642528	0	2.448827
16	14	1.640168	.000040	2.450588
17	14	1.088641	.000001	3.007963
18	26	.9732374	.000066	3.181301
19	26	.6351186	.002749	3.938100
20	14	.3035814	.000231	5.696107
21	26	.3017368	.000014	5.713447
22	16	.2987183	.000223	5.742256
23	14	.1495421	.001497	8.115887
24	16	.1373159	.000938	8.469305
25	16	.04352938	.000884	15.042511

TABLE 3

SA-5 MODES

Mode No.	Eigenvalue (XN)	Frequency (cps)	Run No.	Description of Mode
1	30.86438	.56492	1	Slosh of S-IV O_2 in Y direction.
1	30.86438	.56492	2	Same as Run #1
1	30.86438	.56492	3	Same as Run #1
2	28.09667	.59209	1	Slosh of S-IV O_2 in X direction.
2	28.09667	.59209	2	Same as Run #1
2	28.09667	.59209	3	Same as Run #1
3	3.591900	1.655975	3	Tanks 6 and 8 moving in positive radial direction.
3	3.591662	1.656026	1	Same as Run 3. Convergence is better.
4	3.487810	1.680499	1	Tank 6 moving in positive radial direction. Tank 8 moving in negative radial direction. Center line elements are basically the 1st bending mode in the Y direction.
4	3.486362	1.680848	2	Same as Run #1. Convergence is better.
4	3.486115	1.680906	2	Same as Run #1.

TABLE 3 (Cont'd.)

Mode No.	Eigenvalue (XN)	Frequency (cps)	Run No.	Description of Mode
4	3.485068	1.681159	3	Same as Run #1.
4	3.469382	1.684957	3	Same as Run #1.
4	3.457256	1.687907	3	Basically the same as Run #1. Probably not too well converged.
5	3.440089	1.692115	3	Tanks 5 and 7 moving in negative radial direction.
6	3.335514	1.718437	1	Tank 5 moving in negative radial direction. Tank 7 moving in positive radial direction.
6	3.334737	1.718635	1	Same as Run #1 above.
6	3.326033	1.720884	3	Same as Run #1.
7	3.276448	1.733856	2	Tank 10 moving in negative radial direction. Tank 12 moving in positive radial direction. Center line elements in 1st bending in Y direction.
7	3.272423	1.734923	2	Same as Run #2 above.
7	3.270767	1.735360	1	Same as Run #2.
8	3.173972	1.761638	1	Seems to be 1st bending of center line elements in X direction. Convergence is poor.

TABLE 3 (Cont'd.)

Mode No.	Eigenvalue (XN)	Frequency (cps)	Run No.	Description of Mode
8	3.171768	1.762235	3	Tank 9 moving in negative radial direction. Tank 11 moving in positive radial direction. 1st bending of center line elements in X direction excited.
8	3.166736	1.763634	2	Same as Run 3. Convergence poor.
8	3.144373	1.769838	2	Same as Run 3. Convergence better.
8	3.143391	1.770172	3	Same as Run 3 above. Convergence better.
8	3.142010	1.770561	1	Same as Run 3. Convergence better.
8	3.133650	1.772921	2	Same as Run 3. Convergence poor.
9	3.127286	1.774723	1	Tanks 10 and 12 moving in positive radial direction.
10	3.027156	1.803836	1	Tanks 9 and 11 moving in negative radial direction.
10	3.018287	1.806484	2	Same as Run #1.
10	3.009716	1.809054	3	Same as Run #1.

TABLE 3 (Cont'd.)

Mode No.	Eigenvalue (XN)	Frequency (cps)	Run No.	Description of Mode
11	2.417463	2.018529	1	Tanks 6 and 10 moving in positive radial direction. Tanks 8 and 12 moving in negative radial direction. Tanks 5 and 9 moving in negative tangential direction. Tanks 7 and 11 moving in positive tangential direction.
11	2.417426	2.018542	2	Same as Run #1.
11	2.409637	2.021802	2	Same as Run #1.
12	2.392992	2.028824	1	Tanks 6 and 11 moving in negative radial direction. Tanks 8 and 9 moving in positive radial direction. Tanks 5 and 10 moving in positive tangential direction. Tanks 7 and 12 moving in negative radial direction. Not too well converged.
12	2.385318	2.032083	3	Same as Run #1. Not too well converged.
12	2.382129	2.033443	1	Same as Run #1 above. Convergence better.
12	2.381943	2.033524	2	Same as Run #1. Convergence better.

TABLE 3 (Cont'd.)

Mode No.	Eigenvalue (XN)	Frequency (cps)	Run No.	Description of Mode
13	1.885757	2.285449	3	Tanks 5 and 7 moving in negative tangential direction. Tanks 6 and 8 moving in positive tangential direction.
14	1.830392	2.319759	1	Tank 6 moving in negative tangential direction. Tank 8 moving in positive tangential direction.
14	1.829816	2.320120	2	Same as Run #1.
14	1.828028	2.321256	1	Same as Run #1 above.
15	1.791688	2.344678	1	Tank 5 moving in negative tangential direction. Tank 7 moving in positive tangential direction.
15	1.791427	2.344848	2	Same as Run #1.
13	1.707959	2.401463	3	Same as Run #3 above. Converged early then reconverged.
16	1.642528	2.448827	3	Tanks 5,6,7 and 8 moving in negative tangential direction. Tanks 9,10,11 and 12 moving in positive tangential direction.
16	1.640168	2.450588	3	Same as Run #3 above.

TABLE 3 (Cont'd.)

Mode No.	Eigenvalue (XN)	Frequency (cps)	Run No.	Description of Mode
17	1.088641	3.007963	3	Upper end of outer tanks moving in negative tangential direction. Lower end of outer tanks moving in positive tangential direction. Engines moving in counter clockwise direction.
18	1.049099	3.064123	1	1st bending of center line elements in X direction. Slight curl at engine end.
19	1.046448	3.068001	2	1st bending of center line elements in Y direction. Slight curl at engine end.
20	.9732374	3.181301	3	Tanks 9 and 11 moving in negative tangential direction. Tanks 10 and 12 moving in positive tangential direction.
-	.7824508	3.548000	2	Mode too poorly converged for definition.
21	.6351186	3.938100	3	Tanks 9 and 10 moving in negative tangential direction. Tanks 11 and 12 moving in positive tangential direction.
21	.6314452	3.949528	2	Same as Run #3.
21	.6306326	3.952095	2	Same as Run #3.

TABLE 3 (Cont'd.)

Mode No.	Eigenvalue (XN)	Frequency (cps)	Run No.	Description of Mode
22	.5868233	4.096965	1	Rotation of center line elements in X direction. Vertical motion of outer tanks. 2nd bending of outer tanks. (Predominately tanks 10 and 12 in tangential direction).
22	.5840905	4.106493	1	Same as Run #1 above.
23	.3894338	5.028567	2	2nd bending of tanks 6, 8,10 and 12 in radial direction. 2nd bending of tanks 5,7,9 and 11 in tangential direction. Rotation of center line elements in Y direction and vertical motion of outer tanks.
23	.3894731	5.028954	2	Same as Run #2 above.
23	.3876284	5.040876	2	Same as Run #2 above.
24	.3590616	5.237585	1	Same as Mode 23 except rotation of center line elements in X direction.
24	.3567154	5.254736	1	Same as Run #1 above.
25	.3035814	5.696107	3	2nd bending of outer tanks in tangential direction.
25	.3017368	5.713447	3	Same as Run #3 above.
25	.2987183	5.742256	3	Same as Run #3 above.

TABLE 3 (Cont'd.)

Mode No.	Eigenvalue (XN)	Frequency (cps)	Run No.	Description of Mode
23	.2410509	6.392358	2	Same as Run #2 above. Not fully converged as yet.
26	.1495421	8.115887	3	Clockwise torsion of engines 1 thru 8 reacted by 2nd bending of outer tanks.
26	.1373159	8.469305	3	Same as Run #3 above.
27	.04352938	15.042511	3	Engine 1,2,3 and 4 moving in counter clockwise torsional mode reacted by outer tanks in 2nd bending.

TABLE 4a

SA-8 EIGENVALUES

Run #1 - Element #51

Mode No.	N	XN	Convergence	f_n
1	10	30.81019	0	.565415
2	7	28.22816	0	.590709
3	18	3.457658	.000020	1.687810
4	12	3.354867	.000017	1.713472
5	18	3.350731	.000003	1.714530
6	6	3.256019	.000113	1.739287
7	12	3.039455	.000207	1.800182
8	14	3.025524	.000019	1.804322
9	18	1.345992	.000050	2.705165
10	19	1.014589	.000104	3.115799
11	20	.3237804	.000267	5.515561
12	22	.01465022	.000515	25.929603

TABLE 4b

SA-8 EIGENVALUES

Run #2 - Element #198

Mode No.	N	XN	Convergence	f_n
1	6	30.81018	0	.565415
2	11	28.22817	0	.590709
3	18	3.484805	.000019	1.681222
4	24	3.378488	.000006	1.707471
5	24	3.265856	.000033	1.736664
6	24	3.204805	.000083	1.753128
7	24	3.018510	.000726	1.806418
8	25	2.422205	.000102	2.016549
9	17	2.415563	.000228	2.019323
10	25	2.388029	.000141	2.030929
11	25	1.914805	.001158	2.268046
12	18	1.872444	.000288	2.293564
13	17	1.871905	.000354	2.293888
14	25	1.868207	.000118	2.296121
15	23	1.315205	.000010	2.736637
16	25	1.315168	.000061	2.736678
17	24	.6339651	.000112	3.941671
18	23	.4126714	.000354	4.885547

TABLE 4c

SA-8 EIGENVALUES

Run #3 - Element #320

Mode No.	N	XN	Convergence	f_n
1	10	30.81018	0	.565415
2	10	28.22817	0	.590709
3	26	3.591644	.000051	1.656030
4	22	3.586875	.000928	1.657129
5	21	3.486045	.000207	1.680923
6	21	3.372253	.000335	1.709050
7	21	3.202595	.000277	1.753732
8	22	3.011883	.000360	1.808405
9	28	2.441054	.005865	2.008752
10	21	2.391108	.000387	2.029621
11	28	1.926711	.008475	2.361031
12	21	1.885512	.000054	2.285600
13	18	1.642535	.000016	2.448819
14	28	1.328688	.000383	2.722719
15	19	1.088913	.000010	3.007590
16	24	.9730964	.000121	3.181546
17	26	.6317079	.000248	3.948715
18	21	.3017320	.000024	5.713542
19	26	.1722093	.000885	7.56285
20	28	.1704550	.003380	7.601572
21	28	.1385571	.003355	8.431323

TABLE 5

SA-8 MODES

Mode No.	Eigenvalue (XN)	Frequency (cps)	Run No.	Description of Mode
1	30.81019	.565415	1	Slosh mode of S-IV O_2 in Y direction.
1	30.81019	.565415	2	Same as Run #1.
1	30.81019	.565415	3	Same as Run #1.
2	28.22816	.590709	1	Slosh mode of S-IV O_2 in X direction.
2	28.22816	.590709	2	Same as Run #1.
2	28.22816	.590709	3	Same as Run #1.
3	3.591644	1.656030	3	Tanks 6 and 8 moving in positive radial direction.
4	3.586875	1.657129	3	1st bending of center line elements. 2nd bending of outer tanks in tangential direction. Engines 1,2,3 and 4 in clockwise torsion. Probably not converged.
5	3.486045	1.680923	3	Tank 6 moving in positive radial direction. Tank 8 moving in negative radial direction.
5	3.484805	1.681222	2	Same as Run #3.
5	3.457658	1.687810	1	Same as Run #3.

TABLE 5 (Cont'd.)

Mode No.	Eigenvalue (XN)	Frequency (cps)	Run No.	Description of Mode
6	3.378488	1.707471	2	Tank 5 moving in negative radial direction. Tank 7 moving in positive radial direction.
6	3.372253	1.709050	3	Same as Run #2.
6	3.354867	1.713472	1	Same as Run #2.
6	3.350731	1.714530	1	Same as Run #2.
-	3.265856	1.736664	2	Non-converged.
-	3.256019	1.739287	1	Converged very early. Seems to be 1st bending mode in X-direction. Reconverges later on.
7	3.204805	1.753128	2	Tank 9 moving in negative radial direction. Tank 11 moving in positive radial direction.
7	3.202595	1.753732	3	Same as Run #2.
8	3.039455	1.800182	1	Tank 5 moving in positive radial direction. Tank 7 moving in negative radial direction. Tank 10 moving in positive tangential direction. Tank 12 moving in negative tangential direction.
8	3.025524	1.804322	1	Same as Run #1 above.

TABLE 5 (Cont'd.)

Mode No.	Eigenvalue (XN)	Frequency (cps)	Run No.	Description of Mode
9	3.018510	1.806418	2	Tanks 9 and 11 moving in positive radial direction.
9	3.011883	1.808405	3	Same as Run #2.
10	2.441054	2.008752	3	Tank 10 moving in positive radial direction. Tank 12 moving in negative radial direction.
10	2.422205	2.016549	2	Same as Run #3. Convergence is poor.
10	2.415563	2.019323	2	Same as Run #3.
11	2.391108	2.029621	3	Tank 9 moving in positive radial direction. Tank 11 moving in negative radial direction.
11	2.388029	2.030929	2	Same as Run #3. Better convergence.
12	1.926711	2.261031	3	Tank 6 moving in negative tangential direction. Tank 8 moving in positive tangential direction.
12	1.914805	2.268046	2	Same as Run #3.
13	1.885512	2.285600	3	Tanks 5 and 7 moving in negative tangential direction. Tanks 6 and 8 moving in positive tangential direction.

TABLE 5 (Cont'd.)

Mode No.	Eigenvalue (XN)	Frequency (cps)	Run No.	Description of Mode
14	1.872444	2.293564	2	Rotation of center line elements about X axis (Y-motion). Tanks 5,6, 10 and 11 moving in negative vertical direction. Tanks 7,8,9 and 12 moving in positive vertical direction. Tank 5 moving in positive tangential direction. Tank 7 moving in negative tangential direction.
14	1.871905	2.293888	2	Same as Run #2 above.
14	1.868267	2.296121	2	Same as Run #2 above.
15	1.642535	2.448819	3	Tanks 5,6,7 and 8 moving in positive tangential direction. Tanks 9,10,11 and 12 moving in negative tangential direction.
16	1.345992	2.705165	1	1st bending of center line elements in X-direction. Slight curl at engine end.
-	1.328688	2.722719	3	Not well converged. Combination of 1st bending in X and Y direction.

TABLE 5 (Cont'd.)

Mode No.	Eigenvalue (XN)	Frequency (cps)	Run No.	Description of Mode
17	1.315168	2.736678	2	1st bending of center line elements in Y-direction. Slight curl at engine end.
18	1.088913	3.007590	3	Torsional mode of outer tanks with upper elements moving in negative tangential direction and lower elements in positive tangential direction.
19	1.014589	3.115799	1	Tank 10 moving in negative tangential direction. Tank 12 moving in positive tangential direction. Rotation of center line elements about Y axis (X-direction).
20	.9730964	3.181546	3	Tanks 9 and 11 moving in negative tangential direction. Tanks 10 and 12 moving in positive tangential direction.
21	.6339651	3.941671	2	Tanks 9 and 10 moving in positive tangential direction. Tanks 11 and 12 moving in negative tangential direction.
21	.6317079	3.948715	3	Same as Run #2.

TABLE 5 (Cont'd.)

Mode No.	Eigenvalue (XN)	Frequency (cps)	Run No.	Description of Mode
22	.4126714	4.885547	2	Tanks 6 and 10 moving in negative vertical direction. Tanks 8 and 12 moving in positive vertical direction. Center line elements including the engines moving in Y direction.
23	.3237804	5.515561	1	2nd bending of all tanks in the radial direction with tanks 5,7,9 and 11 predominate. 2nd bending of tanks 5,6,7 and 8 in tangential direction. Tanks 9,10,11 and 12 in tangential direction show 2nd bending tendency.
24	.3017320	5.713542	3	2nd bending of all tanks in the tangential direction. Engines 1,2,3 and 4 in torsional mode.
25	.1722093	7.56285	3	Engines 1 thru 8 in torsional mode balanced by outer tanks in torsion. Tanks 5 thru 7 indicate some 2nd bending.
25	.1704550	7.601572	3	Same as Run #3 above.

TABLE 5 (Cont'd.)

Mode No.	Eigenvalue (XN)	Frequency (cps)	Run No.	Description of Mode
26	.1385571	8.431323	3	Engines 1 thru 8 in torsion. Tanks 5,6,7 and 8 in torsion and 2nd bending. Tanks 9, 10,11 and 12 in 2nd bending.
27	.01465022	25.929603	1	2nd bending of center line elements.

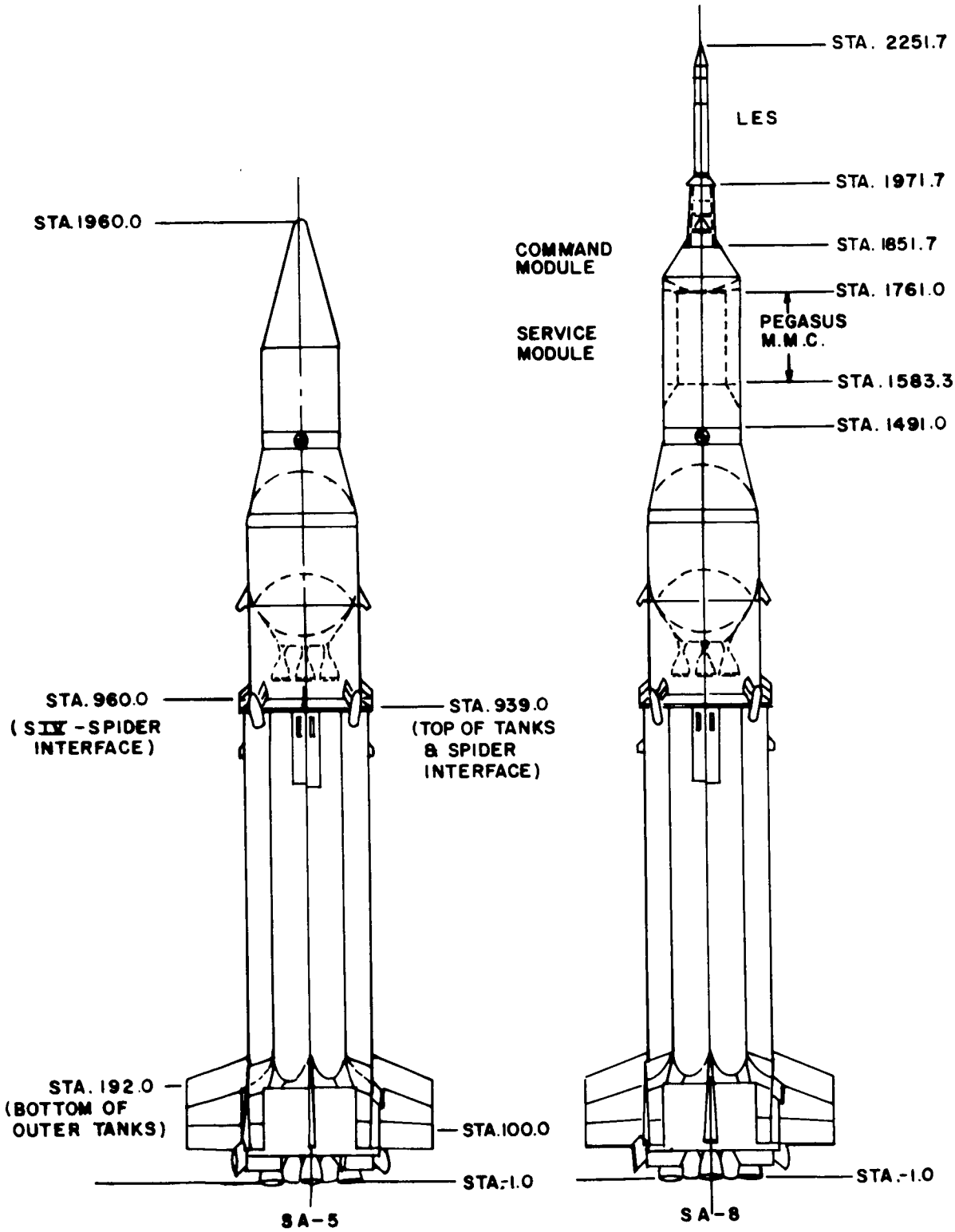

Figure 1 - Basic Dimensions of SA-5 and SA-8

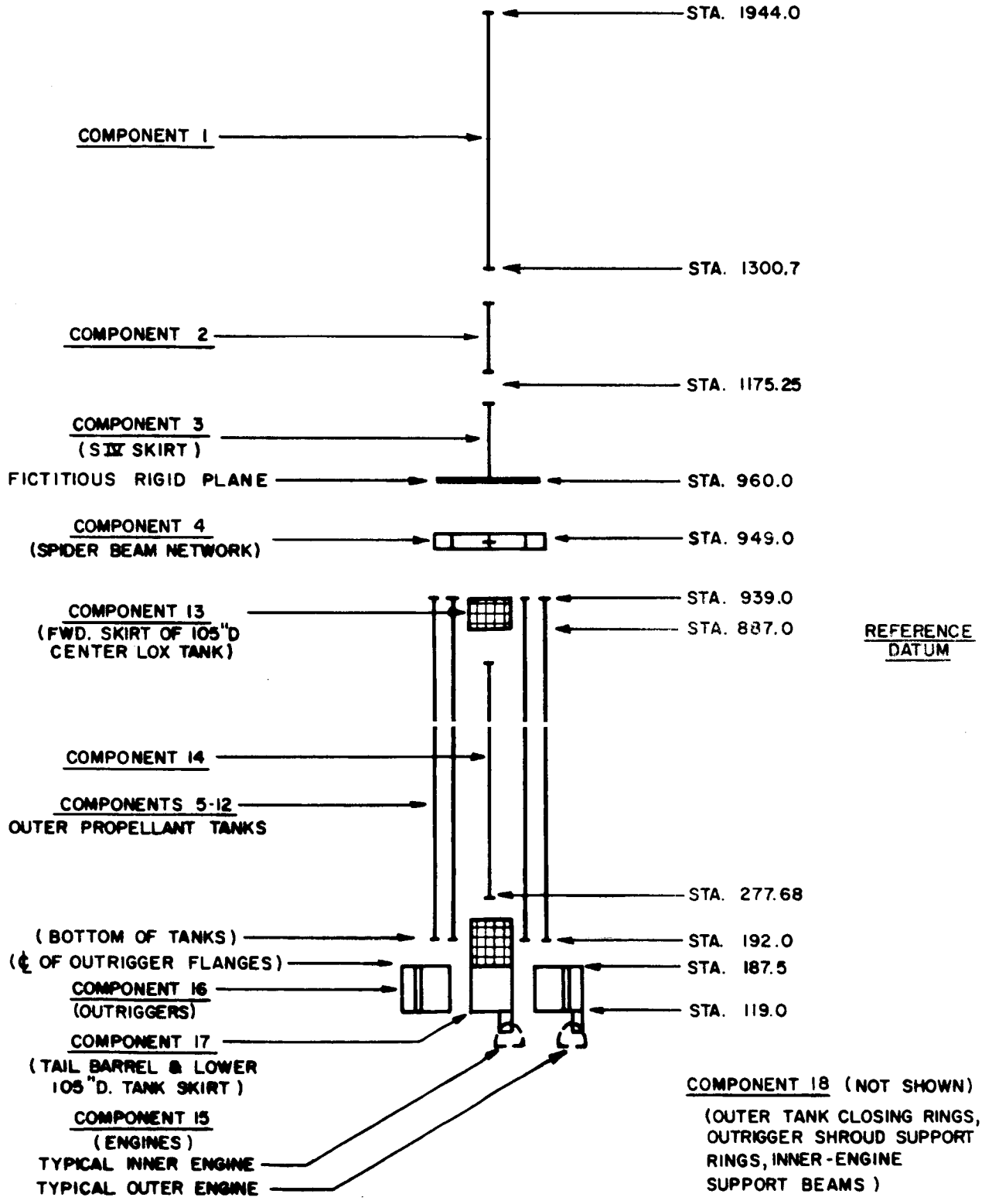

Figure 2 - Idealized Structural Components of SA-5

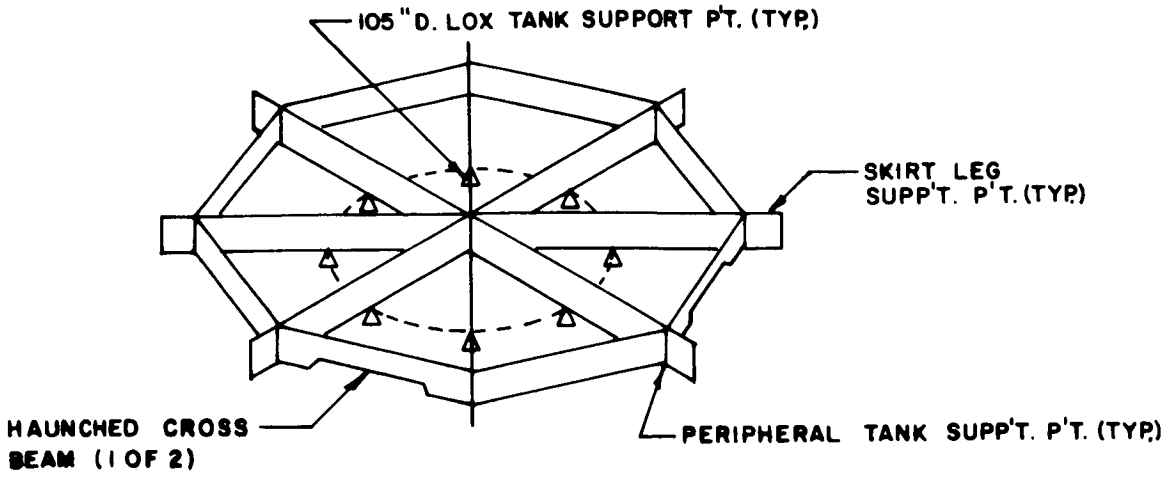

Figure 3 - Component 4 - Schematic View of the Spider Beam Network Idealization.

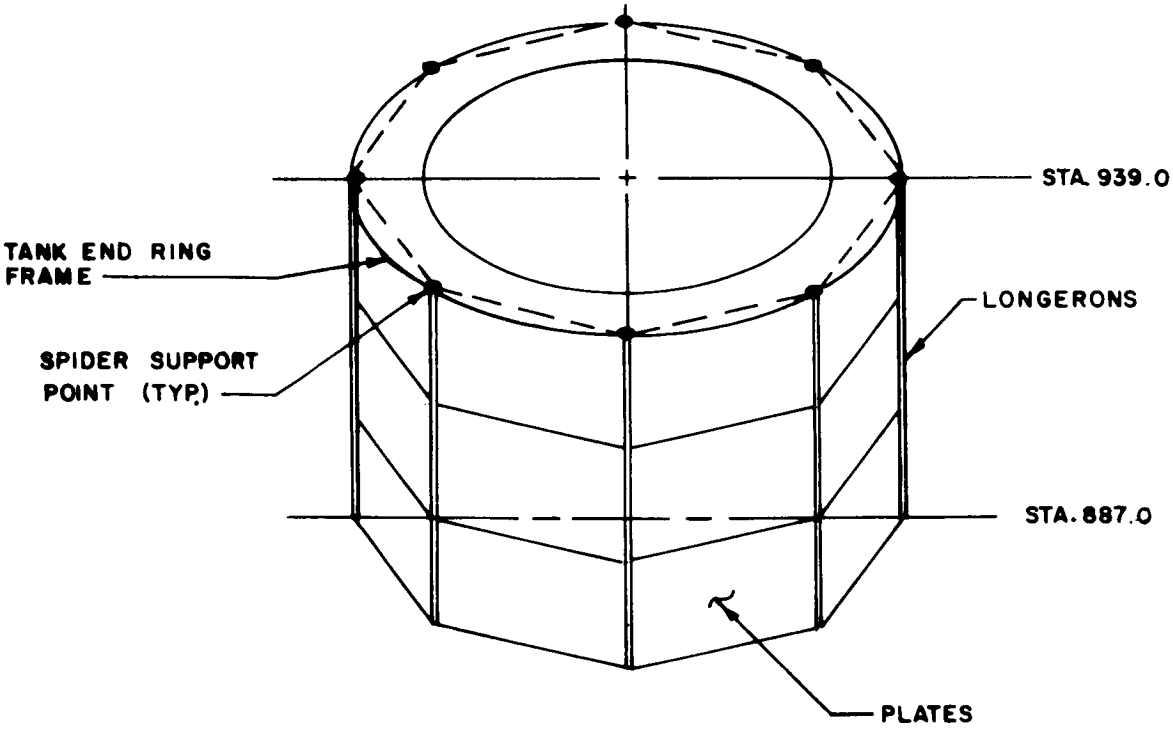

Figure 4 - Component 13 - Upper End, 105" D. Lox Tank Idealization

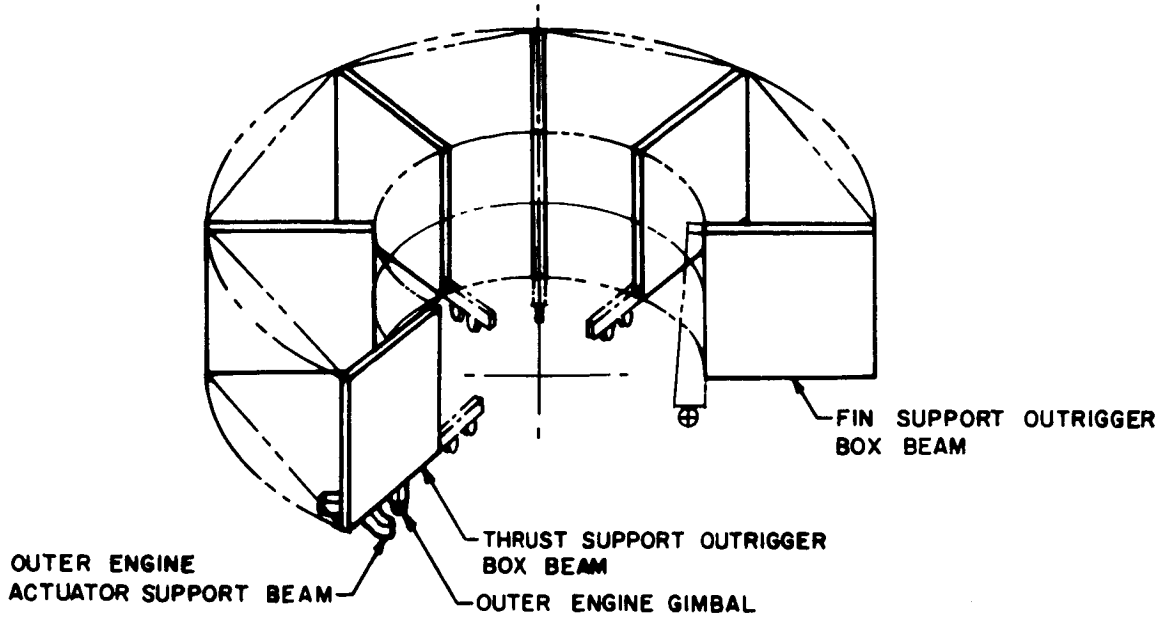

a. Component 16 - Outriggers

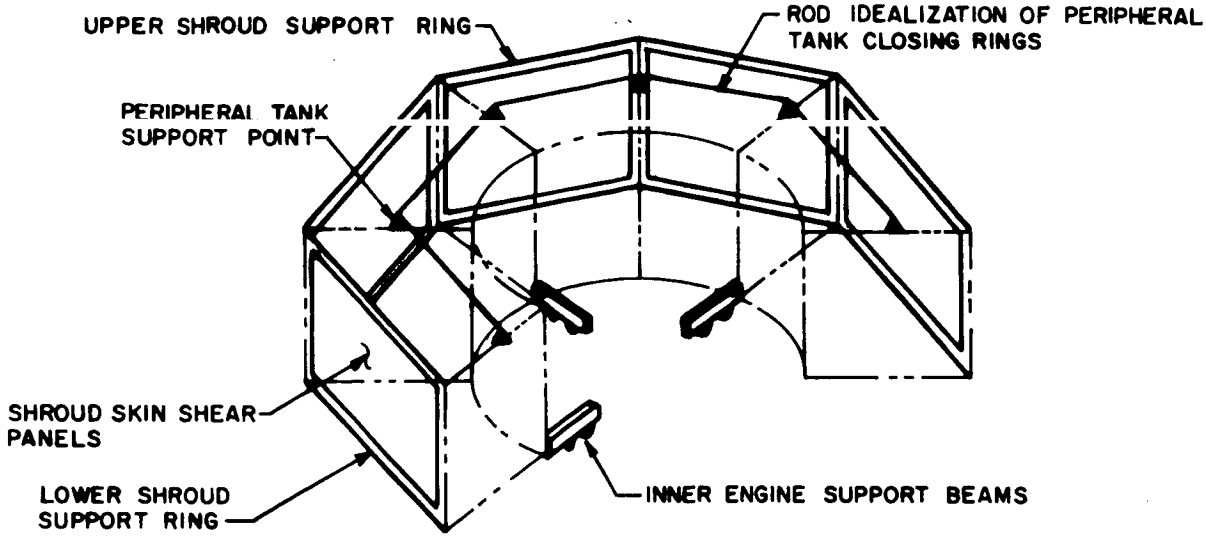

b. Component 18 - Shroud, Closing Rings
and Inner Engine Support Beams

Figure 5 - Outer Thrust Structure

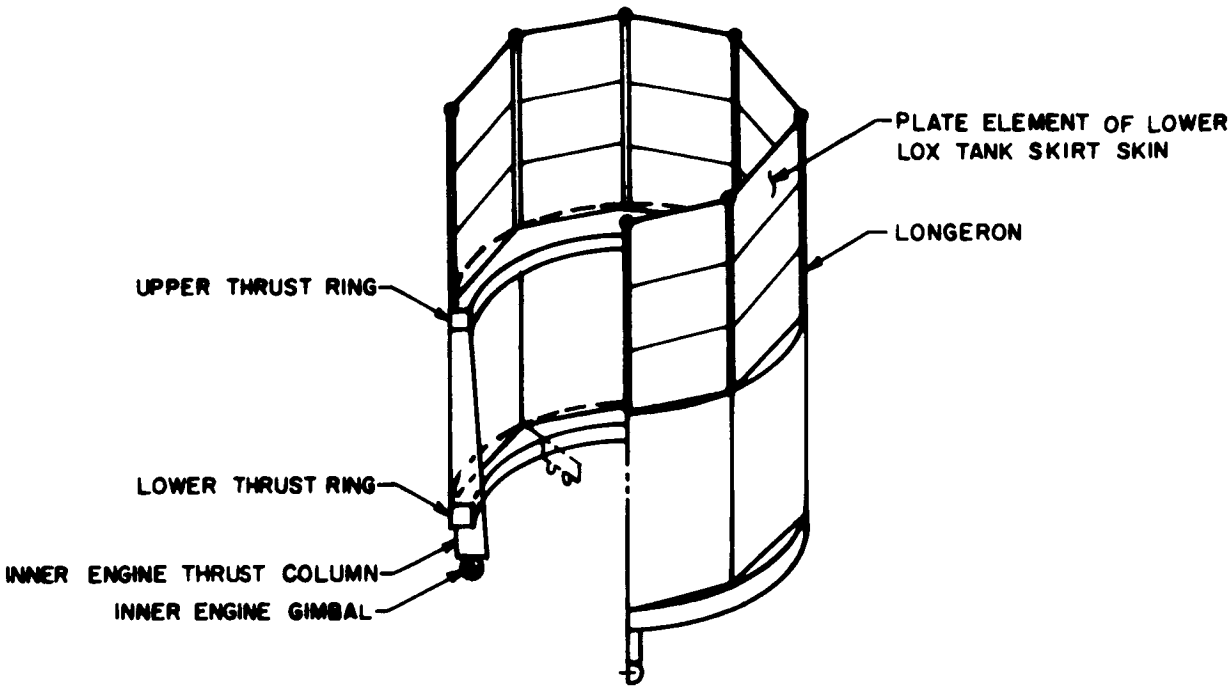

Figure 6 - Component 17 - Inner Tail Barrel and Thrust Structure Idealization

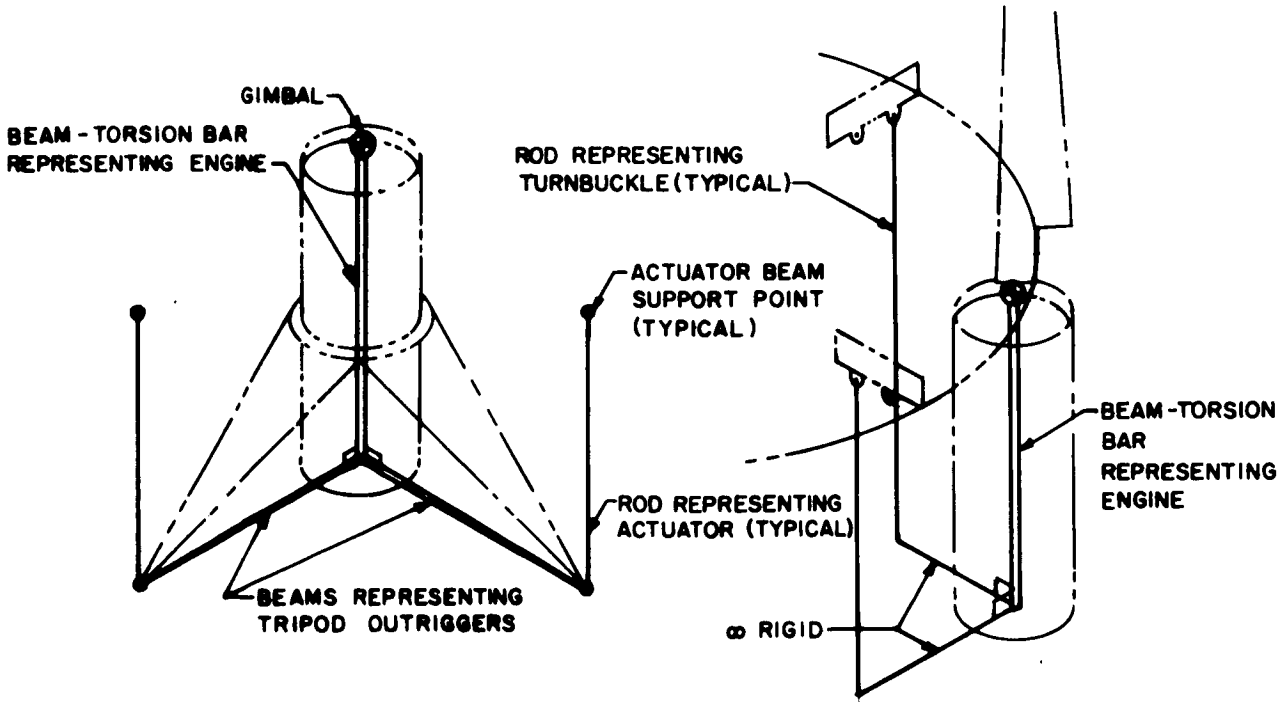

Figure 7 - Component 18 - Engine Idealization

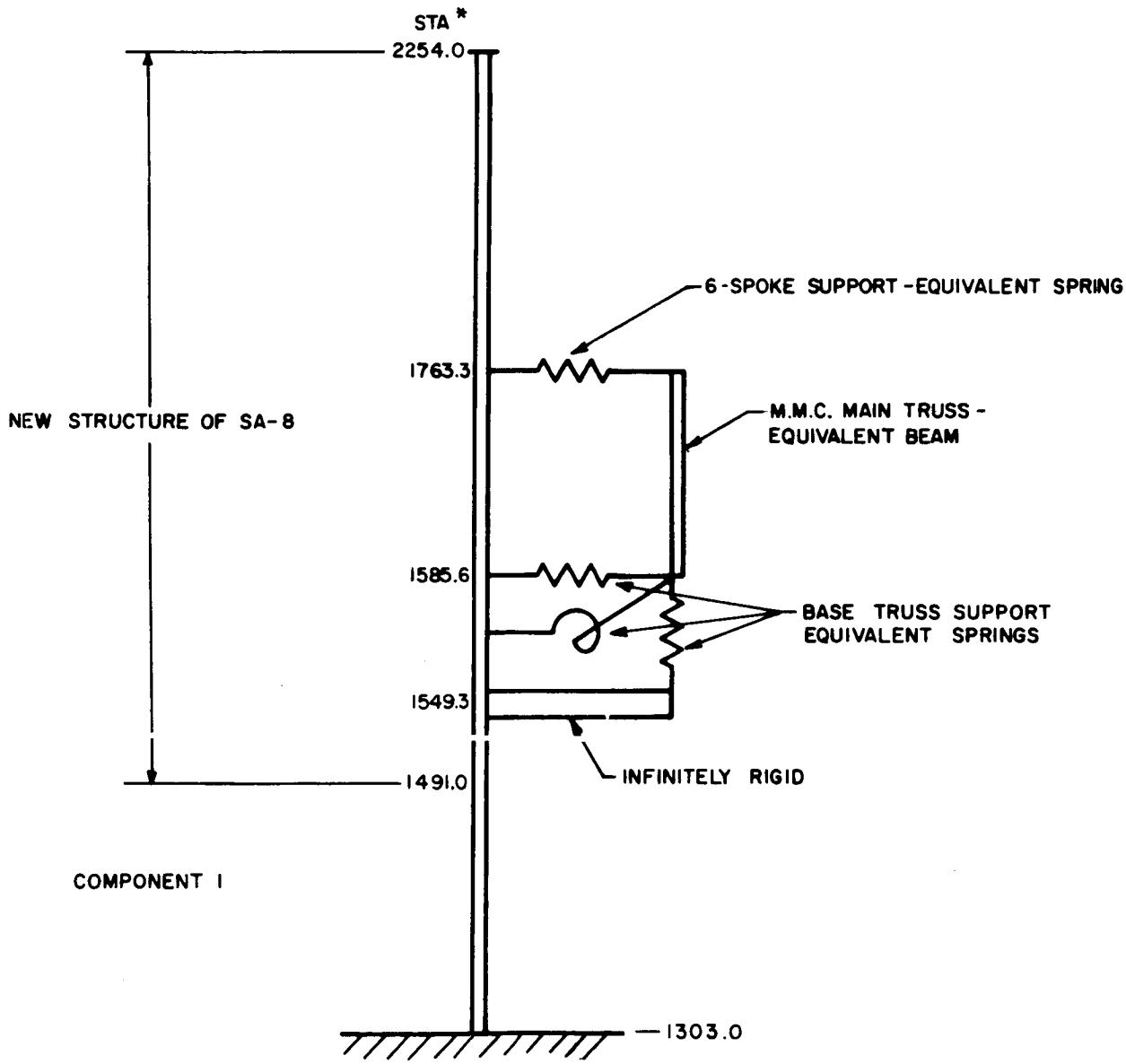

Figure 8 - Upper Stage Idealization of SA-8

STA*	
SA-5 LOCATIONS	SA-6 LOCATIONS
1946.30	2231
1930.93	2166
1900.18	2110
1869.43	2050
1838.68	1996
1807.93	1974
1777.18	1938
1746.43	1904
1715.68	1871
1684.93	1854
1654.18	1819.3
1623.43	1786
1592.68	1745.3
1561.93	1674.3
1531.18	1611.3
1500.43	1539.3
1469.68	1488
1438.93	1438.93
1408.18	1408.18
1377.43	1377.43
1346.68	1346.68
1315.93	1315.93
1303	1303

j°F

X	Y	Z
1	148	
2	149	
3	150	
4	151	
5	152	
6	153	
7	154	
8	155	
9	156	
10	157	
11	158	295**
12	159	
13	160	
14	161	
15	162	
16	163	
17	164	296**
18	165	
19	166	
20	167	
21	168	
22	169	

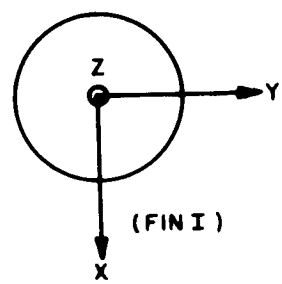

TOP VIEW

* SUBTRACT 2.3 IN. FOR t=0, FULLY FUELED CONDITION
** FOR SA-5, °F 295 IS AT STA. 1717.7
°F 296 IS AT STA. 1478.3

Figure 9 - Component 1 - Locations of Degrees of Freedom

STA.*	j °F		
	x'	y'	Z
1763.3	369	374	
1713.6	370	375	
1673.6	371	376	379
1633.6	372	377	
1585.6	373	378	

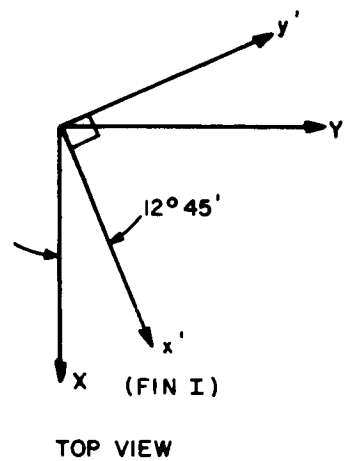

* SUBTRACT 2.3 IN. FOR t=0, FULLY FUELED CONDITION

Figure 10 - SA-8 - Component 19 - Locations of Degrees of Freedom

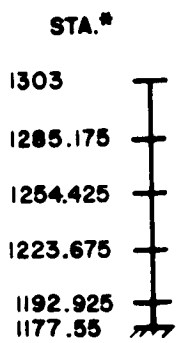

j °F	
X	Y
25	172
23	170
26	173
27	174
28	175

* SUBTRACT 2.3 IN. FOR t=0, FULLY FUELED CONDITION

Figure 11 - Component 2 - Portion of S-IV

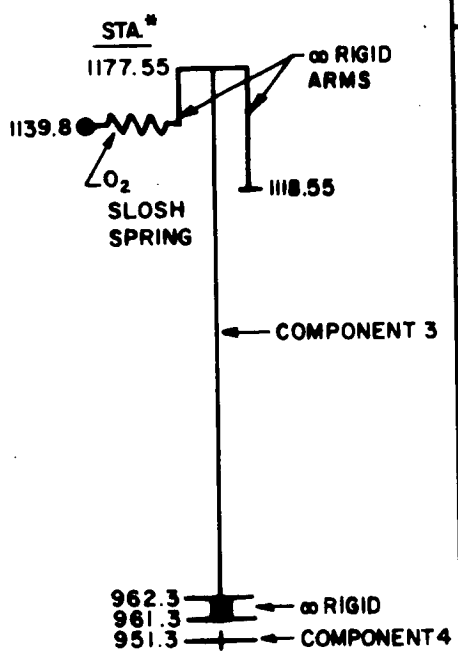

j °F				COMMENTS
X	Y	Z	Z'	
		297,298	176	
31	178			O_2 SLOSH MASS
32	179			O_2 MASS C.G.
38	185			SPIDER C.G.

* SUBTRACT 2.3 IN. FOR t=0, FULLY FUELED CONDITION

Figure 12 - Component 3 - S-IV Skirt
Component 4 - Spider Beam Network

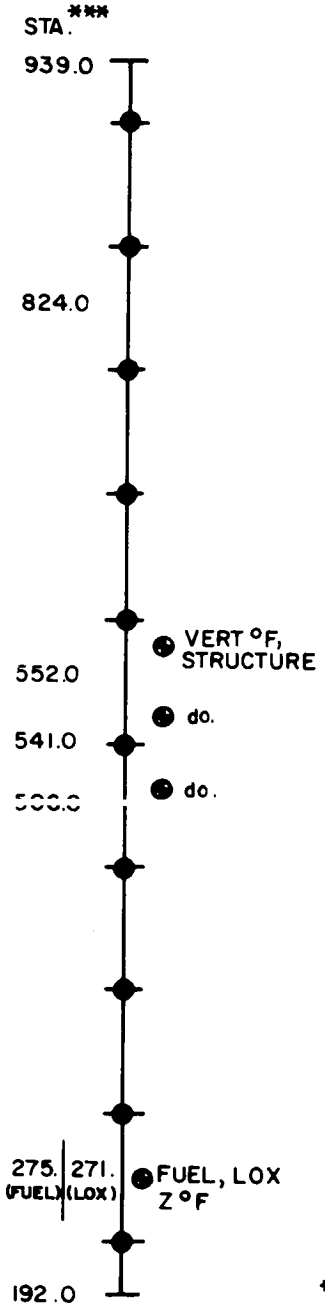

COMP. NO.	RADIAL* 5	6	7	8	9	10	11	12	TANGENTIAL** 5	6	7	8	9	10	11	12	VERTICAL (Z) 5	6	7	8	9	10	11	12
	52	64	76	88	100	112	124	136	199	211	223	235	247	259	271	283								
	53	65	77	89	101	113	125	137	200	212	224	236	248	260	272	284								
	55	67	79	91	103	115	127	139	202	214	226	238	250	262	274	286								
	56	68	80	92	104	116	128	140	203	215	227	239	251	263	275	287								
	57	69	81	93	105	117	129	141	204	216	228	240	252	264	276	288								
	58	70	82	94	106	118	130	142	205	217	229	241	253	265	277	289								
																			305	307				
																					309	311	313	315
	59	71	83	95	107	119	131	143	206	218	230	242	254	266	278	290								
																	301	303						
	60	72	84	96	108	120	132	144	207	219	231	243	255	267	279	291								
	61	73	85	97	109	121	133	145	208	220	232	244	256	268	280	292								
	62	74	86	98	110	122	134	146	209	221	233	245	257	269	281	293								
																	302	304	306	308	310	312	314	316
	63	75	87	99	111	123	135	147	210	222	234	246	258	270	282	294								

*RADIAL = + OUTWARD

** TANGENTIAL = + COUNTER CLOCKWISE WHEN VIEWED FROM ABOVE

***COLD CONDITION AT t = 0, FULLY FUELED

Figure 13 - Components 5 thru 12 - Peripheral Tanks

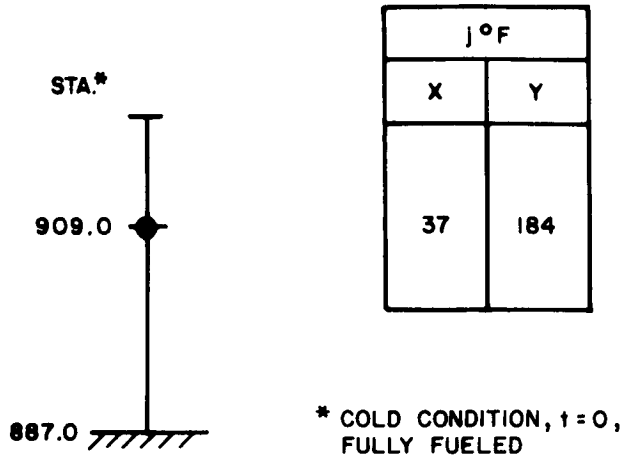

Figure 14 - Component 13 - Center Lox Tank-Upper Portion

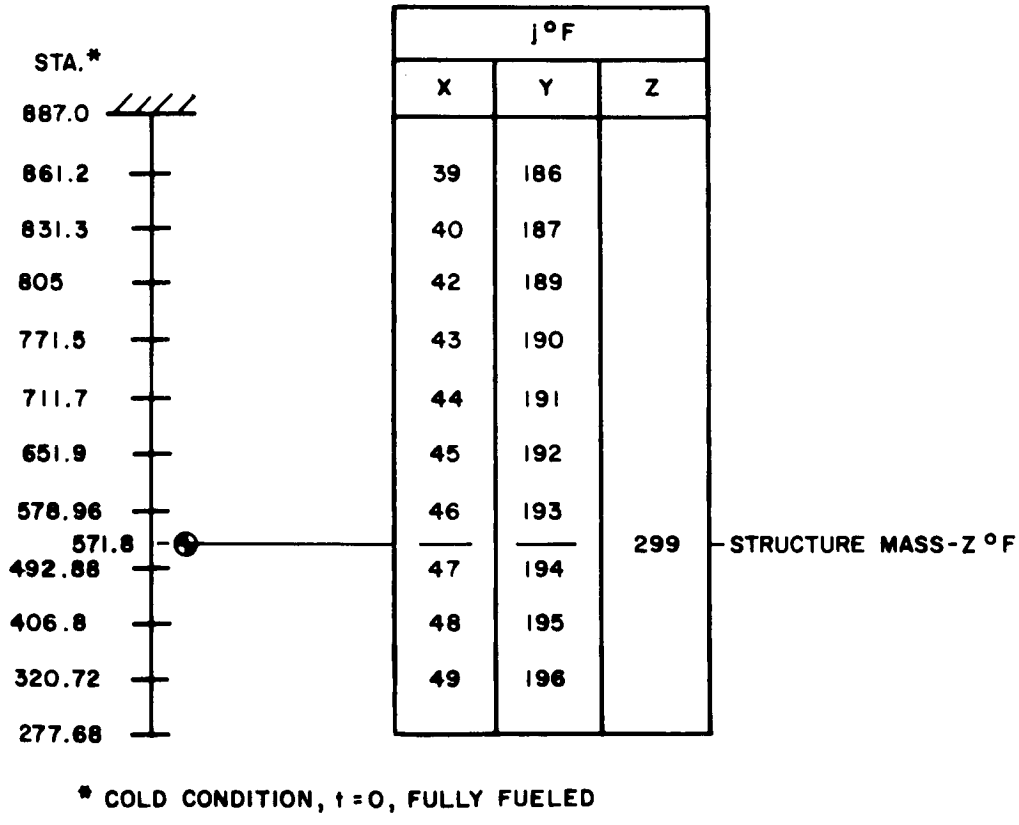

Figure 15 - Component 14 - Center Lox Tank-Lower Portion

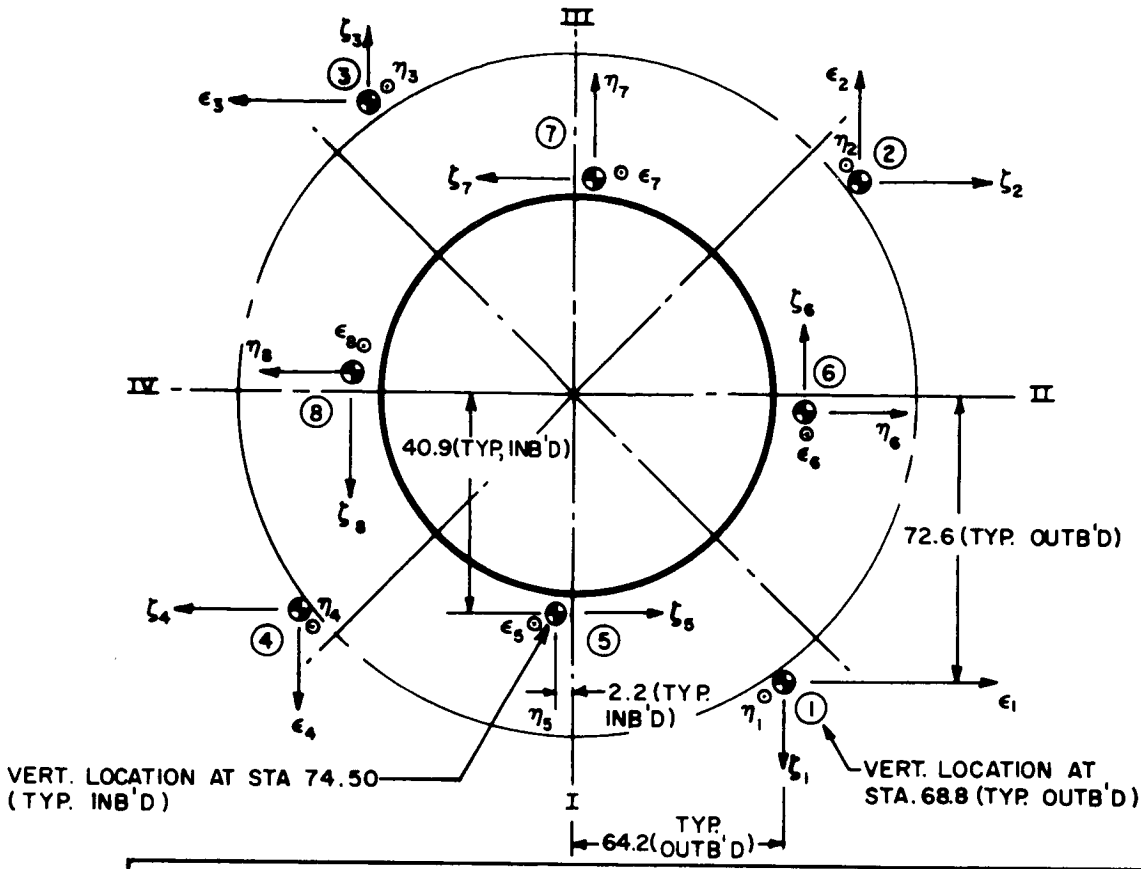

i - ENGINE NUMBER	j DEGREES OF FREEDOM					
	$\eta(i)$	$\zeta(i)$	$\epsilon(i)$	$\eta'(i)$ *	$\zeta'(i)$ *	$\epsilon'(i)$ *
1	321	322	323	324	325	326
2	327	328	329	330	331	332
3	333	334	335	336	337	338
4	339	340	341	342	343	344
5	345	346	347	348	349	350
6	351	352	353	354	355	356
7	357	358	359	360	361	362
8	363	364	365	366	367	368

* PRIMED DIRECTIONS DENOTE ROTATIONAL °F

Figure 16 - Component 15 - Engine Degrees of Freedom

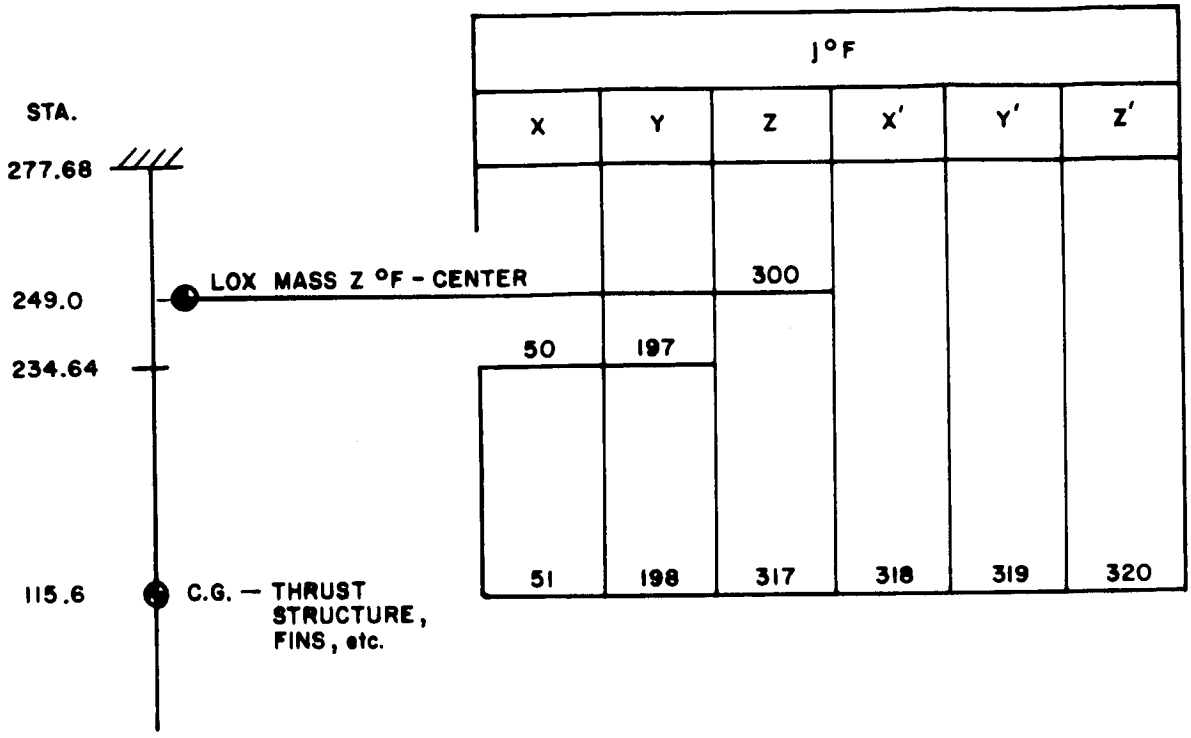

Figure 17 - Component 17 - Thrust Structure

VII. REFERENCES

1. Meissner, C.J., Levy, R.S., Telles, S. and Berman, J., "The Determination of the Natural Modes of Vibration for Large Systems," Republic Aviation Corporation Report No. RAC 406-4, March 8, 1963, Farmingdale, N. Y.

2. Meissner, C., Digital Program 64D017, "High Order Flexibility Matrices of Complex Redundant Structures," Republic Aviation Corporation Report No. RAC 1381, May 14, 1963, Farmingdale, N.Y.

3. Turner, M.J., Clough, R.W., Martin, H.C., Topp, L.J., "Stiffness and Deflection Analysis of Complex Structures," Journal of the Aeronautical Sciences, Vol. 23, September 1956, pp. 805-823.

4. NASA Report SA-5-03, "Thrust Structure Deflection Analysis," Volume II, September 11, 1962.

5. Republic Aviation Corporation Report RAC 1403, "Digital Program 64A092 - Wing Analysis for Internal Forces, Deformations and the Flexibility Matrix Using the Stiffness Method," by C. Meissner, September 1, 1964.

REFERENCES

6. Fairchild-Stratos Report MMC-DR-4, "MMC Detail Structural Analysis - Part II: Center Sections and Miscellaneous Components," by G. Vasley, November 14, 1963.

SA-5 RUN #1 MODE 1 XN = 30 85438

0.4106488E-01	0.3974395E-01	0.3710640E-01	0.3449261E-01	0.3190613E-01	0.2934625E-01	0.2682532E-01
0.2431912E-01	0.2184840E-01	0.1940255E-01	0.1702251E-01	0.1471640E-01	0.1242478E-01	0.1019554E-01
0.8008005E-02	0.5887174E-02	0.3829331E-02	0.1897507E-02	0.2208619E-03	-0.1187427E-02	-0.2388805E-02
-0.3423446E-02	-0.4363690E-02	-0.2506566E-01	-0.3825138E-02	-0.5263604E-02	-0.6110529E-02	-0.6913097E-02
-0.	-0.	0.2173348E-03	-0.8061290E-02	-0.	-0.	-0.
-0.	0.1055787E-01	0.2034712E-02	0.1337270E-01	0.1199574E-01	-0.	0.1042874E-01
0.8124987E-02	0.3780797E-02	-0.1616208E-04	-0.3218988E-02	-0.4913648E-02	-0.5041743E-02	-0.4650231E-02
-0.5270777E-02	-0.1929495E-05	0.1676888E-01	0.9881596E-02	-0.	0.9787741E-02	0.6247012E-02
0.4795242E-02	0.4081729E-02	0.3331980E-02	0.1937313E-02	-0.5117897E-03	-0.4699610E-02	-0.1088170E-01
0.4445935E-01	0.3785958E-01	-0.	0.3754348E-01	0.3012769E-01	0.2184318E-01	0.1358733E-01
0.5934400E-02	-0.1224059E-02	-0.7685564E-02	-0.1321947E-01	-0.1778098E-01	-0.1677892E-01	-0.9925330E-02
-0.	-0.9879313E-02	-0.6356461E-02	-0.4930722E-02	-0.4227498E-02	-0.3469396E-02	-0.2042810E-02
0.4496451E-03	0.4684526E-02	0.1092411E-01	-0.4440136E-01	-0.3761413E-01	-0.	-0.3727857E-01
-0.2973917E-01	-0.2135732E-01	-0.1302675E-01	-0.5395872E-02	0.1686339E-02	0.8026134E-02	0.1340848E-01
0.1779818E-01	-0.1926429E-01	-0.1932735E-01	0.	-0.1913488E-01	-0.1607705E-01	-0.1062690E-01
-0.4397158E-02	0.1239732E-02	0.5562272E-02	0.7925502E-02	0.7698368E-02	0.4981130E-02	0.4431567E-01
0.3644597E-01	0.	0.3621951E-01	0.2989204E-01	0.2415871E-01	0.1846412E-01	0.1260868E-01
0.6017282E-02	-0.1415626E-02	-0.9923978E-02	-0.1946705E-01	0.1926241E-01	0.1912044E-01	0.
0.1891576E-01	0.1572548E-01	0.1020296E-01	0.3958831E-02	-0.1650054E-02	-0.5908503E-02	-0.8189813E-02
-0.7863620E-02	-0.5037584E-02	-0.4430684E-01	-0.3666094E-01	0.	-0.3644053E-01	-0.3028007E-01
-0.2459438E-01	-0.1892334E-01	-0.1304406E-01	-0.6389899E-02	0.1124741E-02	0.9742766E-02	0.1940485E-01
0.1509255E-00	0.1491171E-00	0.1455185E-00	0.1419106E-00	0.1383179E-00	0.1347126E-00	0.1311166E-00
0.1275298E-00	0.1239410E-00	0.1203661E-00	0.1167691E-00	0.1132017E-00	0.1096434E-00	0.1060866E-00
0.1025275E-00	0.9899878E-01	0.9547074E-01	0.9192635E-01	0.8846100E-01	0.8503684E-01	0.8163972E-01
0.7827874E-01	0.7493401E-01	-0.1238298E-01	0.7686390E-01	0.7160598E-01	0.6828645E-01	0.6496188E-01
0.5050007E-06	0.	-0.7491736E 00	0.5690856E-01	0.	0.	0.
0.	0.4876861E-01	0.5299393E-01	0.4399886E-01	0.4108624E-01	0.	0.3852115E-01
0.3524449E-01	0.2935575E-01	0.2340476E-01	0.1606322E-01	0.7297411E-02	-0.1554698E-02	-0.1046358E-01
-0.1941440E-01	-0.3192794E-01	0.4560271E-01	0.4065278E-01	-0.9579419E-16	0.4037190E-01	0.3429211E-01
0.2695735E-01	0.1916776E-01	0.1167998E-01	0.4475801E-02	-0.2318129E-02	-0.8926998E-02	-0.1611677E-01
-0.1682886E-01	-0.1149743E-01	-0.6066892E-15	-0.1146573E-01	-0.9059763E-02	-0.8187380E-02	-0.7248255E-02
-0.5254097E-02	-0.1708432E-02	0.3213152E-02	0.8743677E-02	0.1274782E-01	-0.4566545E-01	-0.4074278E-01
-0.3009381E-15	-0.4046733E-01	-0.3439982E-01	-0.2705846E-01	-0.1924890E-01	-0.1173649E-01	-0.4496784E-02
0.2333487E-02	0.8963265E-02	0.1616338E-01	0.1681122E-01	0.1142936E-01	0.1432586E-14	0.1139631E-01
0.8956925E-02	0.8084031E-02	0.7155578E-02	0.5193473E-02	0.1676794E-02	-0.3209523E-02	-0.8714669E-02
-0.1270290E-01	0.4398024E-01	0.3641187E-01	0.1101425E-14	0.3619308E-01	0.3004254E-01	0.2460717E-01
0.1933420E-01	0.1366262E-01	0.6804349E-02	-0.1282372E-02	-0.1025553E-01	-0.1920794E-01	0.1936009E-01
0.1827228E-01	-0.2564633E-15	0.1808780E-01	0.1472864E-01	0.8865289E-02	0.2188379E-02	-0.3368688E-02
-0.6694002E-02	-0.7459060E-02	-0.6377808E-02	-0.5521519E-02	-0.4410320E-01	-0.3618214E-01	0.2739228E-15
-0.3592860E-01	-0.2933254E-01	-0.2357355E-01	-0.1815485E-01	-0.1251596E-01	-0.5813385E-02	0.2032698E-02
0.1073723E-01	0.1942766E-01	-0.1933184E-01	-0.1850639E-01	0.1308925E-14	-0.1834524E-01	-0.1537692E-01
-0.9828661E-02	-0.3288623E-02	0.2301783E-02	0.5789238E-02	0.6798727E-02	0.5991762E-02	0.5396825E-02
-0.4185651E-04	-0.3985709E-04	-0.3317441E-04	-0.3317433E-04	-0.1776890E-04	0.4612428E-05	-0.1545969E-02
-0.1847217E-02	-0.1090258E-01	-0.1077648E-01	0.1375753E-02	0.1735245E-02	0.1106434E-01	0.1091349E-01
0.5511697E-02	0.6606123E-02	-0.9188217E-02	-0.8854247E-02	-0.5505178E-02	-0.6594024E-02	0.9206856E-02
0.8865976E-02	0.5966793E-05	-0.1061361E-03	0.5427339E-06	0.3043403E-06	-0.7440484E-02	-0.2671057E-02
-0.3953166E-01	0.6165846E-04	-0.8063154E-04	-0.4104966E-05	-0.9052506E-02	-0.3324064E-01	-0.1554515E-02
-0.1532549E-04	-0.1423189E-03	0.1743252E-03	0.7339184E-02	0.2593750E-02	0.3954827E-01	-0.6075255E-04
0.8040875E-04	0.6226383E-05	0.9176748E-02	0.3323453E-01	0.1640513E-02	0.1578981E-04	0.1429095E-03
-0.1761898E-03	-0.3784776E-02	-0.3459899E-01	0.2485439E-02	-0.5646326E-04	-0.1150137E-03	0.8286869E-04
-0.3733761E-01	0.4332061E-03	-0.4285984E-02	-0.4128958E-04	0.1410366E-03	-0.3246503E-03	0.3736722E-02
0.3464030E-01	-0.2472871E-02	0.5806393E-04	0.1142185E-03	-0.8095224E-04	0.3739160E-01	-0.4167562E-03
0.4297201E-02	0.3966396E-04	-0.1403692E-03	0.3244755E-03			

SA-5 RUN #1 MODE 2 XN = 28.09667

0.1489912E-00	0.1472115E-00	0.1436526E-00	0.1400943E-00	0.1365374E-00	0.1329827E-00	0.1294303E-00
0.1258796E-00	0.1223302E-00	0.1187846E-00	0.1152450E-00	0.1117130E-00	0.1081860E-00	0.1046640E-00
0.1011486E-00	0.9764058E-01	0.9414221E-01	0.9065840E-01	0.8721371E-01	0.8380881E-01	0.8043621E-01
0.7709139E-01	0.7376260E-01	-0.1278422E-01	0.7569111E-01	0.7044321E-01	0.6713317E-01	0.6383270E-01
-0.	-0.	-0.7620225E 00	0.5581512E-01	-0.	-0.	-0.
-0.	0.4794770E-01	0.5213170E-01	0.4312580E-01	0.4011891E-01	-0.	0.3745597E-01
0.3403544E-01	0.2784732E-01	0.2156797E-01	0.1382666E-01	0.4634543E-02	-0.4563254E-02	-0.1373789E-01
-0.2286561E-01	-0.3559576E-01	0.4410550E-01	0.3794276E-01	-0.	0.3768519E-01	0.3151150E-01
0.2473713E-01	0.1750828E-01	0.1015395E-01	0.2475523E-02	-0.5362438E-02	-0.1329676E-01	-0.2127401E-01
-0.1840247E-01	-0.1584206E-01	-0.	-0.1573491E-01	-0.1316649E-01	-0.1034443E-01	-0.7330074E-02
-0.4261106E-02	-0.1056486E-02	0.2214396E-02	0.5524539E-02	0.8851659E-02	-0.4409818E-01	-0.3793625E-01
-0.	-0.3767815E-01	-0.3150542E-01	-0.2473190E-01	-0.1750399E-01	-0.1015075E-01	-0.2473669E-02
0.5362787E-02	0.1329550E-01	0.2127098E-01	0.1839548E-01	0.1583578E-01	-0.	0.1572849E-01
0.1316111E-01	0.1033991E-01	0.7325954E-02	0.4257948E-02	0.1054525E-02	-0.2214888E-02	-0.5523374E-02
-0.8848673E-02	0.4412377E-01	0.3784743E-01	0.	0.3758769E-01	0.3134398E-01	0.2455063E-01
0.1733844E-01	0.1001549E-01	0.2366112E-02	-0.5447722E-02	-0.1336097E-01	-0.2131745E-01	0.1816527E-01
0.1560055E-01	0.	0.1549378E-01	0.1293798E-01	0.1014885E-01	0.7181744E-02	0.4162964E-02
0.1005533E-02	-0.2222554E-02	-0.5493286E-02	-0.8782407E-02	-0.4412887E-01	-0.3784931E-01	0.
-0.3758906E-01	-0.3134316E-01	-0.2454798E-01	-0.1733474E-01	-0.1001149E-01	-0.2362788E-02	0.5450108E-02
0.1336208E-01	0.2131714E-01	-0.1816142E-01	-0.1559260E-01	0.	-0.1548569E-01	-0.1292574E-01
-0.1013631E-01	-0.7168414E-02	-0.4150155E-02	-0.9945307E-03	0.2231390E-02	0.5499061E-02	0.8785080E-02
-0.2559647E-03	-0.2529327E-03	-0.2477865E-03	-0.2421608E-03	-0.2372148E-03	-0.2314580E-03	-0.2260206E-03
-0.2210563E-03	-0.2157632E-03	-0.2110131E-03	-0.2049125E-03	-0.1997652E-03	-0.1947889E-03	-0.1897128E-03
-0.1840072E-03	-0.1795236E-03	-0.1744960E-03	-0.1678091E-03	-0.1629830E-03	-0.1579788E-03	-0.1526353E-03
-0.1475961E-03	-0.1424821E-03	0.1019942E-04	-0.1450809E-03	-0.1376795E-03	-0.1328750E-03	-0.1272495E-03
0.3021433E-06	0.	0.1453058E-02	-0.1137139E-03	0.	0.	0.
0.	-0.1009575E-03	-0.1237897E-03	-0.8549589E-04	-0.8091661E-04	0.	-0.7675055E-04
-0.7122219E-04	-0.6068822E-04	-0.4935041E-04	-0.3467351E-04	-0.1657605E-04	0.1836992E-05	0.2004107E-04
0.3763363E-04	0.6138809E-04	-0.1828333E-01	-0.1552104E-01	0.6893327E-20	-0.1540716E-01	-0.1267408E-01
-0.9726119E-02	-0.6642104E-02	-0.3563748E-02	-0.4097177E-03	0.2749991E-02	0.5886440E-02	0.8980794E-02
-0.4388419E-01	-0.3729957E-01	0.2038434E-18	-0.3702782E-01	-0.3049975E-01	-0.2344156E-01	-0.1603962E-01
-0.8638362E-02	-0.1046349E-02	0.6564661E-02	0.1412038E-01	0.2157279E-01	0.1829984E-01	0.1553869E-01
-0.6244292E-20	0.1542525E-01	0.1269259E-01	0.9743947E-02	0.6658246E-02	0.3577686E-02	0.4198212E-03
-0.2744355E-02	-0.5885293E-02	-0.8984193E-02	0.4389302E-01	0.3730507E-01	-0.7667350E-19	0.3703321E-01
0.3050232E-01	0.2344073E-01	0.1603607E-01	0.8632282E-02	0.1038414E-02	-0.6573752E-02	-0.1412938E-01
-0.2158053E-01	0.1798450E-01	0.1508010E-01	0.6283298E-19	0.1496541E-01	0.1217949E-01	0.9248517E-02
0.6233146E-02	0.3252660E-02	0.2071710E 03	-0.2846445E-02	-0.5892262E-02	-0.8921771E-02	-0.4370679E-01
-0.3668426E-01	0.4021427E-19	-0.3640859E-01	-0.2967451E-01	-0.2258009E-01	-0.1526970E-01	-0.8028931E-02
-0.6196190E-03	0.6817875E-02	0.1423837E-01	0.2161697E-01	-0.1797253E-01	-0.1508833E-01	-0.2663330E-19
-0.1497515E-01	-0.1220990E-01	-0.9295742E-02	-0.6291072E-02	-0.3313108E-02	-0.2628613E-03	0.2801724E-02
0.5861687E-02	0.8905858E-02	0.4371560E-01	0.3670261E-01	-0.3601192E-19	0.3642761E-01	0.2970476E-01
0.2262012E-01	0.1531486E-01	0.8073500E-02	0.6581710E-03	-0.6789719E-02	-0.1422287E-01	-0.2161420E-01
0.6532850E-06	0.6347617E-06	0.5735502E-06	0.5735503E-06	-0.1591573E-06	-0.1144008E-06	-0.9918381E-02
-0.9915807E-02	0.4126135E-02	0.4125070E-02	0.9925320E-02	0.9922221E-02	-0.4133125E-02	-0.4131827E-02
-0.9817795E-02	-0.9909572E-02	-0.4046490E-02	-0.4082746E-02	0.9820844E-02	0.9911352E-02	0.4043573E-02
0.4080708E-02	-0.9483879E-07	0.2002719E-06	0.1064942E-03	-0.2753849E-07	-0.7720568E-02	-0.4052498E-01
0.9472940E-04	-0.5421956E-06	0.1080804E-06	0.1069223E-03	0.6845781E-02	0.3670412E-04	0.4057759E-01
0.5181581E-07	0.1081678E-03	-0.5549971E-06	0.7724584E-02	0.4053034E-01	-0.9817925E-04	0.4750280E-06
-0.1164223E-06	-0.1070184E-03	-0.6850840E-02	-0.3458530E-04	-0.4058252E-01	-0.9020419E-07	-0.1081631E-03
0.6546718E-06	-0.3991233E-01	0.4360280E-04	-0.4439359E-02	-0.3911020E-06	0.1072854E-03	-0.1208282E-05
0.8967189E-04	0.3994325E-01	-0.2217319E-03	0.1060355E-03	-0.6363055E-06	0.4511092E-05	0.3991644E-01
-0.4652177E-04	0.4439315E-02	0.3254342E-06	-0.1072650E-03	0.1115427E-05	-0.9343975E-04	-0.3994530E-01
0.2216564E-03	-0.1059767E-03	0.6016585E-06	-0.4533771E-05			

SA-5 RUN #1 MODE 3 XN = 3 591662

0.1525112E-03	0.1937521E-03	0.2756925E-03	0.3570264E-03	0.4340230E-03	0.5036696E-03	0.5667304E-03
0.6238646E-03	0.6792316E-03	0.7267747E-03	0.7682694E-03	0.8024743E-03	0.8279069E-03	0.8521020E-03
0.8690153E-03	0.8809698E-03	0.8838906E-03	0.8794670E-03	0.8470812E-03	0.7926383E-03	0.7224959E-03
0.6406973E-03	0.5540597E-03	-0.1747888E-02	0.6044960E-03	0.4641249E-03	0.3751204E-03	0.2873712E-03
-0.	-0.	-0.3359561E-04	0.1771073E-03	-0.	-0.	-0.
-0.	0.8447024E-03	-0.1000902E-02	0.1540097E-02	0.1045482E-02	-0.	0.5484536E-03
0.4580722E-04	-0.1937269E-03	0.1791465E-03	0.5960176E-03	0.3488960E-03	-0.2896082E-03	-0.5532007E-03
-0.3227638E-03	0.3352576E-03	0.1501440E-02	0.5827023E-02	-0.	0.5957839E-02	0.9436735E-02
0.1197780E-01	0.1332192E-01	0.1347612E-01	0.1248377E-01	0.1043851E-01	0.7347433E-02	0.3175464E-02
-0.5008982E-01	-0.1452048E-00	-0.	-0.1481290E-00	-0.2243178E-00	-0.2796696E-00	-0.3057295E-00
-0.3018008E-00	-0.2701161E-00	-0.2139609E-00	-0.1376038E-00	-0.4810793E-01	0.3274717E-02	0.7485802E-02
-0.	0.7610888E-02	0.1099700E-01	0.1349007E-01	0.1459830E-01	0.1425106E-01	0.1260694E-01
0.9862545E-02	0.6391815E-02	0.2864206E-02	-0.5066927E-01	-0.1459348E-00	-0.	-0.1488603E-00
-0.2250684E-00	-0.2802908E-00	-0.3060116E-00	-0.3016145E-00	-0.2694993E-00	-0.2130578E-00	-0.1367202E-00
-0.4779827E-01	-0.8588942E-03	-0.4440774E-03	0.	-0.4411531E-03	-0.2910438E-03	-0.4881990E-03
-0.8593676E-03	-0.1134522E-02	-0.1136434E-02	-0.8060457E-03	-0.3597956E-03	-0.2444905E-03	-0.1072009E-02
-0.1681612E-02	0.	-0.1703972E-02	-0.2256419E-02	-0.2768932E-02	-0.3087085E-02	-0.3102676E-02
-0.2775842E-02	-0.2127143E-02	-0.1290275E-02	-0.5088578E-03	0.2059460E-03	-0.4809731E-03	0.
-0.4917799E-03	-0.8527451E-03	-0.8062091E-03	-0.4935636E-03	-0.1713459E-03	-0.2205952E-04	-0.1206472E-03
-0.2733455E-03	-0.6044580E-04	-0.3675059E-03	-0.1491814E-02	0.	-0.1523845E-02	-0.2373444E-02
-0.2911449E-02	-0.3101625E-02	-0.3006533E-02	-0.2686022E-02	-0.2190486E-02	-0.1491952E-02	-0.5010405E-03
-0.3604920E-03	-0.3475537E-03	-0.3215276E-03	-0.2959194E-03	-0.2705933E-03	-0.2455882E-03	-0.2209399E-03
-0.1969816E-03	-0.1726930E-03	-0.1492320E-03	-0.1267410E-03	-0.1042108E-03	-0.8190439E-04	-0.6075118E-04
-0.3922799E-04	-0.1863460E-04	0.1647449E-05	0.2045069E-04	0.3742068E-04	0.5246674E-04	0.6537468E-04
0.7683939E-04	0.8780418E-04	0.3394267E-03	0.8125497E-04	0.9853920E-04	0.1085518E-03	0.1182602E-03
-0.1187211E-04	0.	-0.7371308E-05	0.1338401E-03	0.	0.	0.
0.	-0.1538336E-03	-0.1509821E-03	-0.1525823E-03	-0.1437769E-03	0.	-0.1362433E-03
-0.1261306E-03	-0.1028895E-03	-0.6943250E-04	-0.1954636E-04	0.3390590E-04	0.6181318E-04	0.5958104E-04
0.2375681E-04	-0.2924134E-04	-0.1863377E-03	0.6636985E-03	-0.2754436E-15	0.6865162E-03	0.1323615E-02
0.1760473E-02	0.1948503E-02	0.1914750E-02	0.1680801E-02	0.1259661E-02	0.7626952E-03	0.3643417E-03
0.1537924E-03	0.3959568E-03	-0.4054171E-15	0.3971354E-03	0.5067844E-03	0.5605690E-03	0.5995483E-03
0.6778869E-03	0.7289455E-03	0.5966336E-03	0.3301818E-03	0.1618503E-03	-0.6398520E-03	0.3392850E-03
-0.1814359E-15	0.3725880E-03	0.1204828E-02	0.1840059E-02	0.2168971E-02	0.2173554E-02	0.1918111E-02
0.1521954E-02	0.1058336E-02	0.5859395E-03	-0.1363431E-02	-0.5521165E-03	0.1058299E-14	-0.5188513E-03
0.2560636E-03	0.9054755E-03	0.1293937E-02	0.1360564E-02	0.1203488E-02	0.1031686E-02	0.8741324E-03
0.6105311E-03	-0.8072971E-03	-0.5028868E-03	0.5904656E-15	-0.4765954E-03	0.2759685E-04	0.6243945E-03
0.1237079E-02	0.1816659E-02	0.2280534E-02	0.2511353E-02	0.2339941E-02	0.1671772E-02	-0.6463778E-03
-0.1110207E-02	-0.2112315E-15	-0.1145086E-02	-0.1807466E-02	-0.2424496E-02	-0.2922588E-02	-0.3315519E-02
-0.3537630E-02	-0.3463368E-02	-0.2865636E-02	-0.1609922E-02	-0.5340416E-04	0.2387099E-04	0.1989230E-15
0.3705706E-04	0.2887184E-03	0.7372299E-03	0.1264442E-02	0.1700958E-02	0.1929879E-02	0.1909837E-02
0.1673081E-02	0.1274342E-02	-0.2069783E-02	-0.2184881E-02	0.8290069E-15	-0.2201916E-02	-0.2524328E-02
-0.3026647E-02	-0.3451029E-02	-0.3532076E-02	-0.3176079E-02	-0.2441230E-02	-0.1548317E-02	-0.7328101E-03
-0.2669851E-03	-0.2662615E-03	-0.2638670E-03	-0.2638670E-03	0.1493796E-03	0.1458634E-04	-0.4767505E-03
-0.4460047E-03	0.5143434E-03	0.5025361E-03	-0.3766891E-03	-0.4197412E-03	0.5362182E-03	0.5519393E-03
0.1728688E-03	0.2706765E-03	0.3790912E-04	0.8211689E-04	-0.1704478E-03	-0.1359234E-03	-0.1106703E-03
-0.6794728E-04	0.8545986E-04	-0.2659097E-06	0.2649646E-06	0.2955905E-05	-0.6309898E-03	0.5158251E-03
0.3626071E-03	0.2362307E-05	0.9257353E-05	0.1029995E-04	0.3113982E-03	-0.5035488E-03	0.1814887E-03
-0.5265223E-05	0.9108840E-05	-0.2282205E-04	-0.4780588E-03	-0.1182224E-02	-0.7841671E-04	0.4203531E-06
-0.2190909E-04	0.1094145E-04	0.7088992E-03	0.5589975E-03	0.1539888E-03	0.1471662E-04	-0.3112179E-05
-0.1126033E-04	0.1266058E-02	0.4733453E-03	0.6956035E-03	0.1346097E-04	-0.2835872E-04	0.1496198E-04
-0.3365080E-03	-0.1971995E-02	-0.1392536E-03	-0.3090154E-04	0.1641599E-04	0.9800710E-05	-0.1799875E-03
0.6574638E-03	-0.9979642E-04	0.2042841E-04	-0.1302084E-04	-0.1434065E-04	-0.4950656E-03	0.1274646E-02
-0.3903571E-03	-0.6538140E-05	0.2114226E-04	-0.7543787E-07			

SA-5 RUN #1 MODE 4 XN = 3 487810

0.2612008E-01	0.2576373E-01	0.2504978E-01	0.2434246E-01	0.2363878E-01	0.2292949E-01	0.2222451E-01
0.2151549E-01	0.2081717E-01	0.2011346E-01	0.1942753E-01	0.1875611E-01	0.1807560E-01	0.1742218E-01
0.1677022E-01	0.1613840E-01	0.1551700E-01	0.1493522E-01	0.1441122E-01	0.1395815E-01	0.1356392E-01
0.1321867E-01	0.1290323E-01	0.9643069E-02	0.1308358E-01	0.1259668E-01	0.1231493E-01	0.1205269E-01
0.	0.	-0.1602641E-02	0.1198915E-01	0.	0.	0.
0.	-0.1364425E-02	-0.8544283E-02	0.1409287E-02	-0.1702009E-04	0.	-0.1693567E-02
-0.3826065E-02	-0.6157556E-02	-0.5554327E-02	-0.1513138E-02	0.5306525E-02	0.1142964E-01	0.1513241E-01
0.1347264E-01	0.1405060E-01	0.1135891E-01	0.2142477E-01	0.	0.2178135E-01	0.3062340E-01
0.3695401E-01	0.3935783E-01	0.3829909E-01	0.3422348E-01	0.2707441E-01	0.1597527E-01	0.6441084E-03
0.6821061E-01	0.1275209E-00	0.	0.1292240E-00	0.1744410E-00	0.2038973E-00	0.2121931E-00
0.1993529E-00	0.1670284E-00	0.1182154E-00	0.5676452E-01	-0.1189447E-01	-0.9849818E-02	-0.1736175E-01
0.	-0.1767762E-01	-0.2447743E-01	-0.2934405E-01	-0.3106869E-01	-0.3011788E-01	-0.2687450E-01
-0.2119659E-01	-0.1209393E-01	0.9066501E-03	-0.7891934E-01	-0.1560059E-00	0.	-0.1602994E-00
-0.2214278E-00	-0.2624144E-00	-0.2760784E-00	-0.2623621E-00	-0.2233785E-00	-0.1623253E-00	-0.6546102E-01
0.1779628E-02	-0.1528535E-01	-0.2633106E-02	-0.	[illegible]	[illegible]	[illegible]
0.2477263E-01	0.2185347E-01	0.3491206E-01	0.3839879E-01	[illegible]	[illegible]	[illegible]
-0.1353381E-02	-0.	-0.1784985E-02	-0.1460587E-01	[illegible]	[illegible]	[illegible]
[illegible]	[illegible]	[illegible]	[illegible]

SA-5 RUN #1 MODE 5 XN = 3 33 514

0.1112327E-00	0.1096221E-00	0.1064053E-00	0.1031964E-00	0.1000155E-00	0.9687920E-01	0.9378490E-01
0.9072519E-01	0.8768329E-01	0.8469367E-01	0.8176477E-01	0.7891107E-01	0.7611750E-01	0.7335961E-01
0.7066820E-01	0.6803880E-01	0.6549915E-01	0.6307351E-01	0.6097720E-01	0.5919212E-01	0.5765130E-01
0.5631104E-01	0.5507944E-01	0.9215693E-01	0.5578617E-01	0.5391274E-01	0.5279644E-01	0.5172833E-01
0.	0.	-0.6139783E-02	0.4859626E-01	0.	0.	0.
0.	-0.4270896E-01	-0.3748221E-01	-0.4165324E-01	-0.3707393E-01	0.	-0.3251465E-01
-0.2674896E-01	-0.1784028E-01	-0.1044942E-01	-0.1174380E-02	0.1198383E-01	0.2575483E-01	0.3721380E-01
0.4572555E-01	0.5351982E-01	-0.7816156E-01	-0.1467893E-00	0.	-0.1487311E-00	-0.2008664E-00
-0.2337443E-00	-0.2418450E-00	-0.2264820E-00	-0.1904066E-00	-0.1368792E-00	-0.6868939E-01	0.1036179E-01
0.6304966E-02	0.1930946E-01	0.	0.1966399E-01	0.2945209E-01	0.3548396E-01	0.3702926E-01
0.3469957E-01	0.2931565E-01	0.2162868E-01	0.1199358E-01	0.5192682E-03	0.7803855E-01	0.1463869E-00
0.	0.1483516E-00	0.2002557E-00	0.2329797E-00	0.2410299E-00	0.2257361E-00	0.1898419E-00
0.1365891E-00	0.6873774E-01	-0.9948467E-02	-0.6229859E-02	-0.1881275E-01	0.	-0.1916288E-01
-0.2857629E-01	-0.3430975E-01	-0.3571146E-01	-0.3340480E-01	-0.2823562E-01	-0.2091982E-01	-0.1176880E-01
-0.8375055E-03	-0.1774535E-01	0.4451804E-02	-0.	0.5205706E-02	0.2432781E-01	0.4108750E-01
0.5317424E-01	0.5941847E-01	0.6004370E-01	0.5603133E-01	0.4961336E-01	0.4361180E-01	-0.2249635E-01
-0.7562581E-02	-0.	-0.7019866E-02	0.6424417E-02	0.1892156E-01	0.2898492E-01	0.3568894E-01
0.3898299E-01	0.3913816E-01	0.3714597E-01	0.3454680E-01	0.1749699E-01	-0.4735068E-02	-0.
-0.5489192E-02	-0.2462814E-01	-0.4135567E-01	-0.5336260E-01	-0.5952419E-01	-0.6009328E-01	-0.5605348E-01
-0.4962605E-01	-0.4361984E-01	0.2102195E-01	0.3833526E-02	-0.	0.3222227E-02	-0.1204263E-01
-0.2587487E-01	-0.3653886E-01	-0.4311341E-01	-0.4560037E-01	-0.4434745E-01	-0.4046391E-01	-0.3567371E-01
0.4130372E-01	0.4079648E-01	0.3977605E-01	0.3876209E-01	0.3774835E-01	0.3673838E-01	0.3573399E-01
0.3473738E-01	0.3373661E-01	0.3274901E-01	0.3177744E-01	0.3081731E-01	0.2986237E-01	0.2892675E-01
0.2799668E-01	0.2708392E-01	0.2618964E-01	0.2533451E-01	0.2454714E-01	0.2383852E-01	0.2320150E-01
0.2261752E-01	0.2206437E-01	0.3378279E-01	0.2238598E-01	0.2152596E-01	0.2101144E-01	0.2051858E-01
-0.1874913E-04	-0.	-0.2143211E-02	0.1926170E-01	-0.	-0.	-0.
-0.	-0.1563297E-01	-0.1631850E-01	-0.1425094E-01	-0.1329426E-01	-0.	-0.1240310E-01
-0.1118845E-01	-0.8793387E-02	-0.6149960E-02	-0.2697111E-02	0.1542679E-02	0.5753591E-02	0.9693573E-02
0.1312288E-01	0.1672674E-01	-0.2038348E-02	-0.2150420E-02	0.1127526E-14	-0.2139202E-02	-0.2091800E-02
-0.2100453E-02	-0.2221451E-02	-0.2403422E-02	-0.2543222E-02	-0.2611083E-02	-0.2922293E-02	-0.3712561E-02
0.2983777E-01	0.1186165E-01	0.3613290E-14	0.1125767E-01	-0.4186970E-02	-0.1795606E-01	-0.2902089E-01
-0.3701930E-01	-0.4226894E-01	-0.4503521E-01	-0.4672550E-01	-0.4906193E-01	0.4743745E-03	0.2700102E-02
0.1533895E-14	0.2761884E-02	0.4461152E-02	0.5808384E-02	0.6671091E-02	0.6997623E-02	0.6776528E-02
0.6093432E-02	0.5435968E-02	0.5283272E-02	-0.3178756E-01	-0.1249635E-01	-0.8897951E-14	-0.1184757E-01
0.4728711E-02	0.1945984E-01	0.3119159E-01	0.3952970E-01	0.4480415E-01	0.4732997E-01	0.4859733E-01
0.5045529E-01	-0.2994398E-01	-0.2810165E-01	-0.5406916E-14	-0.2787973E-01	-0.2358398E-01	-0.1660659E-01
-0.7734388E-02	0.1529160E-02	0.1018449E-01	0.1759123E-01	0.2393947E-01	0.2986385E-01	0.2693555E-01
0.2573738E-01	0.1486783E-14	0.2554741E-01	0.2185619E-01	0.1476676E-01	0.5100194E-02	-0.5016572E-02
-0.1409376E-01	-0.2145270E-01	-0.2788806E-01	-0.3470214E-01	0.2803736E-01	0.2742452E-01	-0.1450641E-14
0.2730192E-01	0.2491585E-01	0.1992534E-01	0.1253048E-01	0.4011083E-02	-0.4647301E-02	-0.1272551E-01
-0.2026116E-01	-0.2761697E-01	-0.3027696E-01	-0.3052517E-01	-0.6855423E-14	-0.3043924E-01	-0.2875269E-01
-0.2345883E-01	-0.1467928E-01	-0.4320505E-02	0.6056354E-02	0.1554738E-01	0.2460656E-01	0.3409034E-01
-0.1820455E-03	-0.1782443E-03	-0.1658685E-03	-0.1658686E-03	0.5909427E-04	0.4160686E-04	0.8333474E-02
0.8216632E-02	-0.1938913E-03	-0.1516320E-03	-0.9395588E-02	-0.9222800E-02	0.1305921E-02	0.1236969E-02
0.2717200E-02	0.4559363E-02	0.2601101E-02	0.4116232E-02	-0.2700178E-02	-0.4455483E-02	-0.2647772E-02
-0.4149376E-02	0.3083189E-04	0.2475946E-04	-0.8219477E-04	0.6072287E-05	0.7781075E-02	0.5581805E-01
0.1741910E-01	-0.1501587E-04	-0.6589119E-04	-0.6270456E-04	-0.8563058E-03	0.2020988E-01	-0.6046808E-01
0.5311248E-04	-0.1089603E-03	-0.1199382E-04	-0.8926331E-02	-0.5684343E-01	-0.1690265E-01	0.2901489E-04
0.6062343E-04	0.8274642E-04	0.1661164E-02	-0.2061246E-01	0.6162548E-01	-0.4184624E-04	0.1121029E-03
-0.2205744E-05	0.5625730E-01	0.1811364E-01	0.2053406E-02	0.4997450E-04	-0.5934095E-04	-0.9227627E-04
0.1699654E-01	-0.5092888E-01	0.7374830E-03	-0.3692754E-04	-0.9226095E-05	0.6906494E-04	-0.5643118E-01
-0.1753199E-01	-0.1906732E-02	-0.3743208E-04	0.4997338E-04	0.1140033E-03	-0.1651099E-01	0.5132959E-01
-0.6398237E-03	0.2195828E-04	0.1412803E-04	-0.6426035E-04			

SA-5 RUN #1 MODE 6 XN = 3 334737

0.1048511E-00	0.1035415E-00	0.1009240E-00	0.9831234E-01	0.9570897E-01	0.9311752E-01	0.9053850E-01
0.8796701E-01	0.8540612E-01	0.8286237E-01	0.8035242E-01	0.7788633E-01	0.7544094E-01	0.7302544E-01
0.7064473E-01	0.6830419E-01	0.6601304E-01	0.6380380E-01	0.6179814E-01	0.6000438E-01	0.5838267E-01
0.5690679E-01	0.5551602E-01	0.8129060E-01	0.5631622E-01	0.5417368E-01	0.5288274E-01	0.5164190E-01
0.	0.	-0.6118707E-02	0.4862975E-01	0.	0.	0.
0.	-0.3597243E-01	-0.3865796E-01	-0.3228424E-01	-0.3000704E-01	0.	-0.2783740E-01
-0.2477689E-01	-0.1837450E-01	-0.1084041E-01	-0.5930854E-03	0.1207949E-01	0.2427051E-01	0.3511252E-01
0.4368572E-01	0.5319545E-01	-0.7949790E-01	-0.1419125E-00	0.	-0.1437134E-00	-0.1915615E-00
-0.2226755E-00	-0.2312042E-00	-0.2171955E-00	-0.1824352E-00	-0.1297986E-00	-0.6280546E-01	0.1314612E-01
-0.7085224E-03	0.1659308E-01	0.	0.1714067E-01	0.3124979E-01	0.4197736E-01	0.4783116E-01
0.4855432E-01	0.4451521E-01	0.3622004E-01	0.2441977E-01	0.1039349E-01	0.7940454E-01	0.1417449E-00
0.	0.1435384E-00	0.1913291E-00	0.2224017E-00	0.2309149E-00	0.2169155E-00	0.1821891E-00
0.1296068E-00	0.6268389E-01	-0.1318608E-01	0.2094898E-02	-0.1231693E-01	0.	-0.1277516E-01
-0.2457140E-01	-0.3361708E-01	-0.3867339E-01	-0.3951178E-01	-0.3642606E-01	-0.2982280E-01	-0.2032130E-01
-0.8982647E-02	-0.1547668E-01	0.5361076E-02	-0.	0.6090060E-02	0.2428691E-01	0.4005211E-01
0.5146689E-01	0.5789792E-01	0.5950209E-01	0.5661771E-01	0.4991538E-01	0.4068983E-01	-0.3391637E-01
-0.2179329E-01	-0.	-0.2132130E-01	-0.9881886E-02	0.1404302E-02	0.1165886E-01	0.2030625E-01
0.2734755E-01	0.3265197E-01	0.3632281E-01	0.3883117E-01	0.1446669E-01	-0.7664235E-02	-0.
-0.8433551E-02	-0.2767618E-01	-0.4422020E-01	-0.5600815E-01	-0.6237924E-01	-0.6350380E-01	-0.5976572E-01
-0.5190960E-01	-0.4134640E-01	0.3201056E-01	0.1705164E-01	-0.	0.1649147E-01	0.2751838E-02
-0.1026994E-01	-0.2138226E-01	-0.2994590E-01	-0.3599266E-01	-0.3948883E-01	-0.4070060E-01	-0.4035027E-01
0.6881837E-01	0.6792457E-01	0.6613525E-01	0.6435021E-01	0.6256946E-01	0.6079413E-01	0.5902869E-01
0.5727084E-01	0.5551507E-01	0.5377669E-01	0.5205560E-01	0.5036401E-01	0.4868681E-01	0.4703117E-01
0.4539489E-01	0.4378738E-01	0.4221295E-01	0.4069387E-01	0.3930805E-01	0.3806310E-01	0.3693480E-01
0.3590311E-01	0.3492731E-01	0.5298169E-01	0.3548979E-01	0.3398303E-01	0.3307378E-01	0.3219974E-01
-0.1501885E-05	-0.	-0.3341750E-02	0.3000011E-01	-0.	-0.	-0.
-0.	-0.2502958E-01	-0.2637750E-01	-0.2265397E-01	-0.2109411E-01	-0.	-0.1964878E-01
-0.1768870E-01	-0.1383467E-01	-0.9568506E-02	-0.3987005E-02	0.2799329E-02	0.9380631E-02	0.1540185E-01
0.2051386E-01	0.2632022E-01	-0.9511949E-02	-0.9291503E-02	0.3412727E-15	-0.9263064E-02	-0.8745125E-02
-0.7757400E-02	-0.6288648E-02	-0.4519760E-02	-0.2569788E-02	-0.6292733E-03	0.1105100E-02	0.2411070E-02
0.3566942E-01	0.1717718E-01	0.1818218E-14	0.1649534E-01	-0.2933912E-03	-0.1588473E-01	-0.2894580E-01
-0.3892241E-01	-0.4607634E-01	-0.5048548E-01	-0.5255914E-01	-0.5338124E-01	0.9338526E-02	0.9108908E-02
0.7180137E-15	0.9085218E-02	0.8566428E-02	0.7587065E-02	0.6136341E-02	0.4390517E-02	0.2474812E-02
0.5714927E-03	-0.1125103E-02	-0.2393606E-02	-0.3566399E-01	-0.1703381E-01	-0.4413723E-14	-0.1634786E-01
0.5544552E-03	0.1622893E-01	0.2933348E-01	0.3931399E-01	0.4643459E-01	0.5078230E-01	0.5277643E-01
0.5351411E-01	-0.3815073E-01	-0.3628711E-01	-0.2642636E-14	-0.3606661E-01	-0.3185323E-01	-0.2514489E-01
-0.1629302E-01	-0.6132689E-02	0.4829174E-02	0.1577476E-01	0.2598134E-01	0.3501625E-01	0.2483813E-01
0.2311831E-01	0.6596321E-15	0.2292551E-01	0.1926244E-01	0.1368932E-01	0.6642934E-02	-0.1220730E-02
-0.9513927E-02	-0.1767088E-01	-0.2519660E-01	-0.3187518E-01	0.3832774E-01	0.3659207E-01	-0.6460903E-15
0.3637516E-01	0.3224265E-01	0.2557289E-01	0.1671747E-01	0.6518913E-02	-0.4505222E-02	-0.1552888E-01
-0.2581739E-01	-0.3492519E-01	-0.2523286E-01	-0.2365043E-01	-0.3241188E-14	-0.2345944E-01	-0.1987886E-01
-0.1433081E-01	-0.7248311E-02	0.7029012E-03	0.9118222E-02	0.1741686E-01	0.2508482E-01	0.3188522E-01
-0.1161091E-03	-0.1159110E-03	-0.1152422E-03	-0.1152422E-03	0.8241808E-04	0.2981451E-04	0.9089701E-02
0.9064775E-02	0.1552600E-02	0.1555042E-02	-0.9113393E-02	-0.9083899E-02	-0.1484957E-02	-0.1487843E-02
0.2522975E-02	0.3790502E-02	0.3670524E-02	0.5625772E-02	-0.2573517E-02	-0.3801236E-02	-0.3670268E-02
-0.5580701E-02	0.2002540E-04	0.4409700E-04	-0.6860228E-04	0.3097586E-06	0.8518586E-02	0.5803126E-01
0.2871625E-01	0.7142606E-05	0.4749539E-04	-0.8521162E-04	0.7152683E-03	0.2883369E-01	-0.5699235E-01
0.6809833E-06	-0.5537500E-04	-0.4924837E-04	-0.8510312E-02	-0.5806495E-01	-0.2866355E-01	-0.6392697E-05
-0.4675098E-04	0.8597370E-04	-0.6812101E-03	-0.2884978E-01	0.5704616E-01	-0.1982813E-06	0.5499635E-04
0.4932511E-04	0.5649498E-01	0.2866180E-01	0.3593385E-02	0.4940294E-04	-0.8855044E-04	0.1544581E-04
0.2687829E-01	-0.5675766E-01	0.2016049E-02	-0.9090402E-04	-0.3080473E-04	-0.3862325E-04	-0.5653257E-01
-0.2866006E-01	-0.3547500E-02	-0.4996241E-04	0.8857052E-04	-0.1428664E-04	-0.2682263E-01	0.5680768E-01
-0.1964578E-02	0.9143365E-04	0.3037549E-04	0.3893005E-04			

SA-5 RUN #1 MODE 7 XN = 3 270767

0.2307766E-01	0.2244457E-01	0.2118417E-01	0.1993039E-01	0.1871003E-01	0.1754746E-01	0.1643558E-01
0.1536846E-01	0.1431657E-01	0.1332642E-01	0.1238671E-01	0.1151052E-01	0.1070214E-01	0.9907389E-02
0.9174120E-02	0.8484461E-02	0.7870522E-02	0.7326364E-02	0.7026200E-02	0.6929882E-02	0.6982223E-02
0.7148487E-02	0.7367601E-02	0.2979130E-01	0.7237911E-02	0.7621455E-02	0.7878819E-02	0.8138064E-02
0.	0.	-0.9429700E-03	0.7913065E-02	0.	0.	0.
0.	-0.1509790E-01	-0.2279209E-02	-0.1918062E-01	-0.1504704E-01	0.	-0.1087608E-01
-0.6329646E-02	-0.2530930E-02	-0.2989735E-02	-0.3646085E-02	0.1514652E-03	0.6360897E-02	0.9978335E-02
0.1042436E-01	0.8117041E-02	-0.2212207E-01	-0.6522485E-02	0.	-0.5911391E-02	0.8530961E-02
0.2251321E-01	0.3370605E-01	0.4056995E-01	0.4303500E-01	0.4127729E-01	0.3705426E-01	0.3405153E-01
-0.4926310E-01	-0.1940143E-01	0.	-0.1837177E-01	0.7871940E-02	0.3090974E-01	0.4882725E-01
0.6097633E-01	0.6767340E-01	0.6909363E-01	0.6539637E-01	0.5703354E-01	0.2251287E-01	0.8121584E-02
0.	0.7607641E-02	-0.5873064E-02	-0.1912141E-01	-0.2992440E-01	-0.3674612E-01	-0.3949887E-01
-0.3834028E-01	-0.3500202E-01	-0.3309347E-01	0.4938766E-01	0.2010721E-01	0.	0.1907346E-01
-0.6672004E-02	-0.2934981E-01	-0.4714352E-01	-0.5937560E-01	-0.6637115E-01	-0.6822517E-01	-0.6502716E-01
-0.5717339E-01	0.2644938E-01	0.3041708E-01	-0.	0.3053766E-01	0.3378647E-01	0.3652166E-01
0.3693523E-01	0.3356184E-01	0.2580590E-01	0.1431463E-01	0.1597376E-02	-0.8681707E-02	-0.8739519E-01
-0.1245382E-00	-0.	-0.1255695E-00	-0.1531138E-00	-0.1691077E-00	-0.1694459E-00	-0.1543959E-00
-0.1247719E-00	-0.8271423E-01	-0.3033545E-01	0.2948704E-01	-0.2592019E-01	-0.2774432E-01	-0.
-0.2779521E-01	-0.2927205E-01	-0.3058357E-01	-0.3016742E-01	-0.2666200E-01	-0.1947638E-01	-0.9169305E-02
0.1898348E-02	0.1026024E-01	0.7443753E-01	0.8885100E-01	-0.	0.8915786E-01	0.9814416E-01
0.1001320E-00	0.9340588E-01	0.7873354E-01	0.5671292E-01	0.2870094E-01	-0.4419786E-02	-0.4176967E-01
0.1853063E-00	0.1828562E-00	0.1779621E-00	0.1730777E-00	0.1682064E-00	0.1633599E-00	0.1585380E-00
0.1537316E-00	0.1489452E-00	0.1441961E-00	0.1394964E-00	0.1348778E-00	0.1303061E-00	0.1257811E-00
0.1213237E-00	0.1169353E-00	0.1126420E-00	0.1084915E-00	0.1047136E-00	0.1013177E-00	0.9823178E-01
0.9541042E-01	0.9274304E-01	0.1408076E-00	0.9427842E-01	0.9016661E-01	0.8767580E-01	0.8527966E-01
0.2932737E-04	-0.	-0.8835184E-02	0.7921343E-01	-0.	-0.	-0.
-0.	-0.6701588E-01	-0.7012391E-01	-0.6089629E-01	-0.5671949E-01	-0.	-0.5284877E-01
-0.4760375E-01	-0.3732935E-01	-0.2603445E-01	-0.1133771E-01	0.6529563E-02	0.2397875E-01	0.4009637E-01
0.5396629E-01	0.6953655E-01	-0.5353190E-01	-0.3831107E-01	0.1396418E-14	-0.3768117E-01	-0.2272798E-01
-0.7443982E-02	0.7035942E-02	0.1977597E-01	0.3086185E-01	0.4008671E-01	0.4691821E-01	0.5117855E-01
0.2604135E-01	0.1574427E-01	0.3238831E-14	0.1540754E-01	0.6650435E-02	-0.1600594E-02	-0.9059272E-02
-0.1560191E-01	-0.2096257E-01	-0.2433656E-01	-0.2653412E-01	-0.2932123E-01	0.5479218E-01	0.3454773E-01
0.1465043E-14	0.3376758E-01	0.1480118E-01	-0.3376423E-02	-0.1920016E-01	-0.3175964E-01	-0.4136527E-01
-0.4817593E-01	-0.5217008E-01	-0.5379814E-01	-0.2236188E-01	-0.1361810E-01	-0.8046327E-14	-0.1333608E-01
-0.5919166E-02	0.1224560E-02	0.7955628E-02	0.1415020E-01	0.1948410E-01	0.2307269E-01	0.2560652E-01
0.2867687E-01	-0.6224994E-01	-0.5969703E-01	-0.4936904E-14	-0.5934066E-01	-0.5258499E-01	-0.4112544E-01
-0.2594850E-01	-0.9239943E-02	0.7732627E-02	0.2374406E-01	0.3848433E-01	0.5214539E-01	-0.2083201E-01
-0.1885074E-01	0.1496109E-14	-0.1870818E-01	-0.1597817E-01	-0.1352199E-01	-0.1083419E-01	-0.6823258E-02
-0.9832909E-03	0.5973136E-02	0.1193688E-01	0.1491739E-01	0.6646931E-01	0.6483855E-01	-0.1441753E-14
0.6456110E-01	0.5927620E-01	0.4903962E-01	0.3427170E-01	0.1709977E-01	-0.1063904E-02	-0.1884203E-01
-0.3574687E-01	-0.5168178E-01	0.2497171E-01	0.2221642E-01	-0.6492862E-14	0.2201935E-01	0.1819300E-01
0.1463419E-01	0.1107806E-01	0.6404078E-02	0.3425404E-04	-0.7288590E-02	-0.1336888E-01	-0.1621729E-01
-0.2809699E-03	-0.2794797E-03	-0.2746969E-03	-0.2746970E-03	0.1735406E-03	0.6641479E-04	0.6346672E-02
0.6132984E-02	0.1131690E-01	0.1137874E-01	-0.7067754E-02	-0.6756585E-02	-0.1055197E-01	-0.1065222E-01
-0.2869422E-02	-0.3797566E-02	0.5799019E-02	0.9308440E-02	0.2512332E-02	0.3400035E-02	-0.5555088E-02
-0.8818769E-02	0.5530899E-04	0.1154856E-03	-0.2204402E-04	-0.5142231E-05	0.7773910E-02	0.6033157E-02
0.7412629E-01	-0.2722320E-04	-0.1567367E-04	0.7513454E-05	0.1032179E-01	0.8075858E-01	-0.1299427E-01
0.7225311E-04	-0.7077662E-04	-0.8897539E-04	-0.7485313E-02	-0.5589781E-02	-0.7462470E-01	0.1740366E-04
0.2793282E-04	-0.1793745E-05	-0.9678770E-02	-0.7997946E-01	0.1231630E-01	-0.8309807E-04	0.6703276E-04
0.7704920E-04	0.8279622E-02	0.7528986E-01	-0.1771739E-02	0.1666985E-03	0.1830638E-05	-0.9268970E-04
0.7375676E-01	0.1190781E-02	0.4488679E-02	0.8321936E-04	-0.1008591E-03	0.2963085E-04	-0.8900855E-02
-0.7583600E-01	0.1886303E-02	-0.1673655E-03	-0.3926754E-05	0.8483571E-04	-0.7359096E-01	-0.1418606E-02
-0.4566985E-02	-0.7832488E-04	0.1085285E-03	-0.4397159E-04			

SA-5 RUN #1 MODE 8 XN = 3.173972

0.2122005E-00	0.2091512E-00	0.2030538E-00	0.1969629E-00	0.1908898E-00	0.1848457E-00	0.1788312E-00
0.1728401E-00	0.1668659E-00	0.1609390E-00	0.1550875E-00	0.1493336E-00	0.1436449E-00	0.1380166E-00
0.1324736E-00	0.1270232E-00	0.1216955E-00	0.1165501E-00	0.1119003E-00	0.1077518E-00	0.1040111E-00
0.1006196E-00	0.9742887E-01	0.1692568E-00	0.9926434E-01	0.9435786E-01	0.9140341E-01	0.8856789E-01
-0.	-0.	-0.9339227E-02	0.8167533E-01	-0.	-0.	-0.
-0.	-0.9648139E-01	-0.9579652E-01	-0.9425186E-01	-0.9186735E-01	-0.	-0.8952617E-01
-0.8607163E-01	-0.7818805E-01	-0.6773958E-01	-0.5158948E-01	-0.2850875E-01	-0.2791840E-02	0.2314238E-01
0.4757797E-01	0.7293032E-01	-0.7776341E-01	-0.5602385E-01	-0.	-0.5521972E-01	-0.3545228E-01
-0.1664631E-01	0.3439500E-04	0.1428204E-01	0.2640724E-01	0.3653496E-01	0.4493973E-01	0.5218869E-01
0.3179419E-01	0.2258557E-01	-0.	0.2224448E-01	0.1390386E-01	0.6009842E-02	-0.9400245E-03
-0.6804085E-02	-0.1172470E-01	-0.1575819E-01	-0.1902765E-01	-0.2178681E-01	0.7773379E-01	0.5588797E-01
-0.	0.5509502E-01	0.3523806E-01	0.1637017E-01	-0.3405797E-03	-0.1458715E-01	-0.2668543E-01
-0.3676142E-01	-0.4509337E-01	-0.5225884E-01	-0.3179838E-01	-0.2240094E-01	-0.	-0.2205838E-01
-0.1355546E-01	-0.5543492E-02	0.1455556E-02	0.7323065E-02	0.1219738E-01	0.1614156E-01	0.1928517E-01
0.2189616E-01	-0.7827328E-01	-0.5732537E-01	0.	-0.5654518E-01	-0.3730423E-01	-0.1869490E-01
-0.1917142E-02	0.1264076E-01	0.2517522E-01	0.3578029E-01	0.4476373E-01	0.5270409E-01	-0.3270382E-01
-0.2381762E-01	0.	-0.2348742E-01	-0.1534137E-01	-0.7487738E-02	-0.4444845E-03	0.5620637E-02
0.1079100E-01	0.1510939E-01	0.1871203E-01	0.2185444E-01	0.7817059E-01	0.5738035E-01	0.
0.5660510E-01	0.3749505E-01	0.1898686E-01	0.2266587E-02	-0.1227876E-01	-0.2484244E-01	-0.3551275E-01
-0.4458961E-01	-0.5264045E-01	0.3252584E-01	0.2383534E-01	0.	0.2351139E-01	0.1552545E-01
0.7797539E-02	0.8276774E-03	-0.5217499E-02	-0.1041792E-01	-0.1480948E-01	-0.1851903E-01	-0.2178891E-01
0.9534289E-04	0.8700658E-04	0.7056993E-04	0.5409526E-04	0.3779317E-04	0.2128093E-04	0.4936408E-05
-0.1115596E-04	-0.2744884E-04	-0.4343619E-04	-0.5971447E-04	-0.7553144E-04	-0.9130003E-04	-0.1069441E-03
-0.1227010E-03	-0.1379618E-03	-0.1531940E-03	-0.1685723E-03	-0.1828680E-03	-0.1965240E-03	-0.2096553E-03
-0.2223130E-03	-0.2347498E-03	-0.4397200E-03	-0.2276392E-03	-0.2469841E-03	-0.2590491E-03	-0.2711529E-03
-0.4052235E-05	0.	0.7762204E-03	-0.2782376E-03	0.	0.	0.
0.	-0.2563769E-04	-0.2554805E-03	0.7804450E-04	0.7002746E-04	0.	0.6465592E-04
0.6023990E-04	0.5858827E-04	0.6255055E-04	0.6983287E-04	0.7404597E-04	0.6474638E-04	0.3545455E-04
-0.2115764E-04	-0.8731941E-04	0.3161104E-01	0.2349056E-01	-0.4087672E-18	0.2318475E-01	0.1566448E-01
0.8294844E-02	0.1494808E-02	-0.4585454E-02	-0.1000125E-01	-0.1469742E-01	-0.1864541E-01	-0.2190639E-01
0.7681005E-01	0.5643147E-01	-0.8685831E-18	0.5566908E-01	0.3688030E-01	0.1861039E-01	0.1937038E-02
-0.1277212E-01	-0.2566657E-01	-0.3664893E-01	-0.4569865E-01	-0.5304343E-01	-0.3191297E-01	-0.2372590E-01
-0.2018011E-18	-0.2341715E-01	-0.1583586E-01	-0.8410192E-02	-0.1563810E-02	0.4547577E-02	0.9998418E-02
0.1471850E-01	0.1868527E-01	0.2196396E-01	-0.7705965E-01	-0.5662525E-01	-0.2172369E-17	-0.5586099E-01
-0.3702119E-01	-0.1869970E-01	-0.1980608E-02	0.1276934E-01	0.2569576E-01	0.3670232E-01	0.4576584E-01
0.5311421E-01	-0.3590413E-01	-0.3476932E-01	0.3259577E-18	-0.3463715E-01	-0.3208052E-01	-0.2788975E-01
-0.2210879E-01	-0.1503915E-01	-0.6937573E-02	0.1743981E-02	0.1050789E-01	0.1887334E-01	0.8602411E-01
0.8334293E-01	0.2285937E-18	0.8301197E-01	0.7668287E-01	0.6631159E-01	0.5211474E-01	0.3489589E-01
0.1533386E-01	-0.5453867E-02	-0.2624664E-01	-0.4590666E-01	0.3623395E-01	0.3527414E-01	-0.1690454E-18
0.3513749E-01	0.3254969E-01	0.2822434E-01	0.2228180E-01	0.1507476E-01	0.6888977E-02	-0.1817905E-02
-0.1055395E-01	-0.1886060E-01	-0.8679218E-01	-0.8402069E-01	-0.2265121E-18	-0.8367890E-01	-0.7714353E-01
-0.6652331E-01	-0.5210223E-01	-0.3472292E-01	-0.1507929E-01	0.5715040E-02	0.2645608E-01	0.4603639E-01
-0.6115204E-04	-0.6137155E-04	-0.6209680E-04	-0.6209680E-04	0.5216173E-04	0.1767064E-04	0.1752469E-01
0.1751593E-01	-0.7200319E-02	-0.7196690E-02	-0.1747664E-01	-0.1746646E-01	0.7173718E-02	0.7169772E-02
0.8509679E-02	0.1392462E-01	0.3496516E-02	0.5736746E-02	-0.8540470E-02	-0.1392461E-01	-0.3500442E-02
-0.5721872E-02	0.1012434E-04	-0.1845662E-06	-0.1887706E-03	0.3097059E-06	0.1577099E-01	0.8656724E-01
0.1305928E-03	-0.1337951E-05	0.4152042E-05	-0.1999955E-03	-0.1004177E-01	-0.1451361E-02	-0.8470428E-01
0.1991273E-05	-0.1536440E-03	-0.1523626E-04	-0.1571213E-01	-0.8658605E-01	-0.7601895E-04	0.1898212E-05
-0.4045970E-05	0.1993352E-03	0.1002121E-01	0.1406924E-02	0.8473656E-01	-0.1356356E-05	0.1533780E-03
0.1603699E-04	0.8199381E-01	-0.3373473E-04	0.9143961E-02	-0.8285266E-05	-0.1944620E-03	-0.1146422E-04
-0.2414571E-02	-0.8393405E-01	-0.1255382E-03	-0.2561885E-03	0.3872478E-04	-0.2807196E-04	-0.8198759E-01
0.5442016E-04	-0.9120482E-02	0.7664099E-05	0.1948639E-03	0.1181145E-04	0.2406475E-02	0.8396830E-01
0.1532820E-03	0.2568460E-03	-0.3903870E-04	0.2902278E-04			

SA-5 RUN #1 MODE 9 XN = 3.142010

0.1874378E-00	0.1849191E-00	0.1798837E-00	0.1748562E-00	0.1698440E-00	0.1648541E-00	0.1598877E-00
0.1549377E-00	0.1500045E-00	0.1451053E-00	0.1402676E-00	0.1355087E-00	0.1307940E-00	0.1261316E-00
0.1215345E-00	0.1170110E-00	0.1125814E-00	0.1082998E-00	0.1044012E-00	0.1008958E-00	0.9771069E-01
0.9479818E-01	0.9204367E-01	0.1455135E-00	0.9362922E-01	0.8938081E-01	0.8681237E-01	0.8433721E-01
0.	0.	-0.9265252E-02	0.7828757E-01	0.	0.	0.
0.	-0.7449418E-01	-0.7687244E-01	-0.6965986E-01	-0.6603242E-01	0.	-0.6248423E-01
-0.5743139E-01	-0.4690814E-01	-0.3467455E-01	-0.1808276E-01	0.2759623E-02	0.2354410E-01	0.4292797E-01
0.5981446E-01	0.7832223E-01	-0.5476726E-01	-0.2919613E-01	0.	-0.2826339E-01	-0.5163036E-02
0.1627774E-01	0.3416675E-01	0.4763205E-01	0.5679014E-01	0.6170066E-01	0.6286894E-01	0.6154881E-01
0.3155894E-01	0.1640404E-01	0.	0.1585430E-01	0.2223362E-02	-0.1030468E-01	-0.2057767E-01
-0.2808547E-01	-0.3291308E-01	-0.3511269E-01	-0.3499346E-01	-0.3332010E-01	0.5464878E-01	0.2868756E-01
0.	0.2774235E-01	0.4330018E-02	-0.1733775E-01	-0.3533462E-01	-0.4878635E-01	-0.5781875E-01
-0.6250509E-01	-0.6336854E-01	-0.6169167E-01	-0.3122491E-01	-0.1517357E-01	0.	-0.1459625E-01
-0.2485048E-03	0.1280288E-01	0.2332650E-01	0.3080428E-01	0.3534378E-01	0.3702849E-01	0.3620870E-01
0.3371603E-01	-0.8581587E-01	-0.1036527E-00	-0.	-0.1040742E-00	-0.1159543E-00	-0.1202516E-00
-0.1143307E-00	-0.9826541E-01	-0.7262346E-01	-0.3901683E-01	0.6968535E-03	0.4405076E-01	-0.2373615E-01
-0.3004153E-01	-0.	-0.3019723E-01	-0.3459894E-01	-0.3657765E-01	-0.3528325E-01	-0.3068483E-01
-0.2297317E-01	-0.1264792E-01	-0.2967406E-03	0.1327625E-01	0.8633663E-01	0.1054419E-00	-0.
0.1058981E-00	0.1188150E-00	0.1238982E-00	0.1183839E-00	0.1023153E-00	0.7627534E-01	0.4191249E-01
0.1156346E-02	-0.4341623E-01	0.2446499E-01	0.3258388E-01	-0.	0.3279709E-01	0.3866682E-01
0.4179601E-01	0.4108704E-01	0.3648775E-01	0.2820664E-01	0.1679730E-01	0.2956505E-02	-0.1236140E-01
-0.2367950E-01	-0.2337281E-01	-0.2274854E-01	-0.2213103E-01	-0.2150692E-01	-0.2089581E-01	-0.2028397E-01
-0.1966775E-01	-0.1905858E-01	-0.1844748E-01	-0.1785904E-01	-0.1726998E-01	-0.1668517E-01	-0.1610737E-01
-0.1554674E-01	-0.1498002E-01	-0.1443267E-01	-0.1392486E-01	-0.1344391E-01	-0.1301665E-01	-0.1263467E-01
-0.1228459E-01	-0.1195615E-01	-0.1977567E-01	-0.1214945E-01	-0.1163611E-01	-0.1132758E-01	-0.1104199E-01
-0.4074233E-05	-0.	0.1058074E-02	-0.1029593E-01	-0.	-0.	-0.
-0.	0.1017692E-01	0.1029765E-01	0.9648120E-02	0.9212168E-02	-0.	0.8805537E-02
0.8245852E-02	0.7106690E-02	0.5777214E-02	0.3932026E-02	0.1534988E-02	-0.9465105E-03	-0.3344898E-02
-0.5523588E-02	-0.8010966E-02	0.3371618E-01	0.2414543E-01	-0.3410938E-16	0.2375657E-01	0.1446903E-01
0.4917822E-02	-0.4173242E-02	-0.1221476E-01	-0.1904556E-01	-0.2444298E-01	-0.2840106E-01	-0.3122170E-01
0.5645242E-01	0.3650495E-01	-0.4033350E-15	0.3573010E-01	0.1688868E-01	-0.1746338E-02	-0.1859614E-01
-0.3257855E-01	-0.4352198E-01	-0.5128433E-01	-0.5625634E-01	-0.5948641E-01	-0.3401108E-01	-0.2451062E-01
-0.1681201E-15	-0.2412611E-01	-0.1488282E-01	-0.5345490E-02	0.3766471E-02	0.1185700E-01	0.1877259E-01
0.2426868E-01	0.2832809E-01	0.3123938E-01	-0.5669658E-01	-0.3683078E-01	0.1018587E-14	-0.3605812E-01
-0.1727657E-01	0.1335157E-02	0.1819805E-01	0.3223259E-01	0.4325408E-01	0.5111357E-01	0.5618392E-01
0.5949822E-01	-0.1923074E-01	-0.1844168E-01	0.6496372E-15	-0.1834554E-01	-0.1649527E-01	-0.1335935E-01
-0.9005423E-02	-0.3838802E-02	0.1799784E-02	0.7470340E-02	0.1283655E-01	0.1770431E-01	0.7305324E-01
0.7056197E-01	-0.1420369E-15	0.7021621E-01	0.6365201E-01	0.5235171E-01	0.3668885E-01	0.1816436E-01
-0.1969721E-02	-0.2209837E-01	-0.4090399E-01	-0.5762190E-01	0.1986725E-01	0.1950355E-01	0.1465533E-15
0.1941995E-01	0.1784749E-01	0.1484975E-01	0.1048415E-01	0.5170197E-02	-0.7139933E-03	-0.6687583E-02
-0.1236173E-01	-0.1750097E-01	-0.7394625E-01	-0.7147811E-01	0.7466646E-15	-0.7113293E-01	-0.6455546E-01
-0.5320270E-01	-0.3744287E-01	-0.1878506E-01	0.1505490E-02	0.2179609E-01	0.4075041E-01	0.5759390E-01
-0.4659871E-04	-0.4645531E-04	-0.4600034E-04	-0.4600034E-04	0.3354222E-04	0.1308671E-04	0.1268547E-01
0.1266714E-01	-0.7187388E-02	-0.7176909E-02	-0.1277051E-01	-0.1274769E-01	0.7287813E-02	0.7274847E-02
0.6735322E-02	0.1082532E-01	0.1695443E-02	0.2774144E-02	-0.6758289E-02	-0.1082383E-01	-0.1695141E-02
-0.2763801E-02	0.6021335E-05	-0.1821342E-04	-0.1370351E-03	0.2305183E-06	0.1078086E-01	0.8672189E-01
-0.8698261E-02	-0.1547381E-05	-0.1189295E-04	-0.1453239E-03	-0.8187850E-02	-0.9831625E-02	-0.8625509E-01
0.4262447E-05	-0.1202498E-03	0.8341299E-05	-0.1082151E-01	-0.8677373E-01	0.8705419E-02	0.2213295E-05
0.1154116E-04	0.1464331E-03	0.8302952E-02	0.9825257E-02	0.8631032E-01	-0.4050937E-05	0.1204164E-03
-0.9814534E-05	0.8370445E-01	-0.8527159E-02	0.6439185E-02	-0.2194583E-04	-0.1341967E-03	-0.1664024E-05
-0.1115078E-01	-0.8560840E-01	-0.1213900E-02	-0.1757646E-03	0.6118176E-04	-0.7815271E-04	-0.8377268E-01
0.8555587E-02	-0.6430567E-02	0.2308870E-04	0.1343457E-03	0.2770331E-05	0.1118739E-01	0.8562685E-01
0.1234050E-02	0.1748597E-03	-0.6068628E-04	0.7791814E-04			

SA-5 RUN #1 MODE 10 XN = 3.127286

0.6032335E-01	0.5686164E-01	0.4997768E-01	0.4312899E-01	0.3654091E-01	0.3039474E-01	0.2464399E-01
0.1925136E-01	0.1396188E-01	0.9150154E-02	0.4712174E-02	0.7255367E-03	-0.2725364E-02	-0.6091180E-02
-0.9006491E-02	-0.1160910E-01	-0.1364813E-01	-0.1521569E-01	-0.1501522E-01	-0.1339801E-01	-0.1075941E-01
-0.7351932E-02	-0.3612218E-02	0.1492862E-00	-0.5795801E-02	0.3504621E-03	0.4284678E-02	0.8171295E-02
0.	0.	-0.7729264E-03	0.1051298E-01	0.	0.	0.
0.	-0.7777919E-01	0.3253470E-01	-0.1169210E-00	-0.8510368E-01	0.	-0.5314257E-01
-0.1995959E-01	0.2631574E-03	-0.1644672E-01	-0.3564906E-01	-0.1563869E-01	0.2701333E-01	0.4745795E-01
0.3960997E-01	0.6446872E-02	0.2106080E-01	0.1309404E-01	0.	0.1317138E-01	0.9262434E-02
0.1139982E-01	0.1237137E-01	0.7817774E-02	-0.7529698E-03	-0.1174379E-01	-0.1468142E-01	0.1192551E-01
-0.1216048E-01	-0.1425829E-01	0.	-0.1439436E-01	-0.1451411E-01	-0.1280018E-01	-0.7097751E-02
0.1878617E-02	0.1069793E-01	0.1751818E-01	0.1798847E-01	0.3983832E-02	-0.1984946E-01	-0.1126005E-01
0.	-0.1082919E-01	-0.6545359E-02	-0.8265815E-02	-0.8964475E-02	-0.4228048E-02	0.4323451E-02
0.1494015E-01	0.1697982E-01	-0.1107507E-01	0.1293249E-01	0.1376883E-01	0.	0.1370232E-01
0.1294205E-01	0.1043432E-01	0.3818894E-02	-0.5801608E-02	-0.1509883E-01	-0.2170346E-01	-0.2096263E-01
-0.4853154E-02	0.1183213E-01	-0.1411709E-01	-0.	-0.1438148E-01	-0.2505116E-01	-0.1522398E-01
0.5977189E-02	0.2372303E-01	0.2886016E-01	0.1887853E-01	0.7088273E-02	0.1899212E-01	0.4776017E-01
0.1191155E-00	-0.	0.1215901E-00	0.1836769E-00	0.2375271E-00	0.2705767E-00	0.2754466E-00
0.2503053E-00	0.1975909E-00	0.1272339E-00	0.5649346E-01	-0.7529308E-02	0.2576306E-01	-0.
0.2624575E-01	0.4282085E-01	0.3760978E-01	0.1878799E-01	0.6026569E-03	-0.7744454E-02	-0.3183327E-02
0.1753991E-02	-0.1768243E-01	0.4401907E-01	0.1446986E-00	-0.	0.1476804E-00	0.2258137E-00
0.2785308E-00	0.2997895E-00	0.2923925E-00	0.2599046E-00	0.2063259E-00	0.1317067E-00	0.3389063E-01
0.2741185E-01	0.2680682E-01	0.2559092E-01	0.2440595E-01	0.2322788E-01	0.2206478E-01	0.2091907E-01
0.1982244E-01	0.1869401E-01	0.1761306E-01	0.1658299E-01	0.1555006E-01	0.1451881E-01	0.1355473E-01
0.1256114E-01	0.1161701E-01	0.1069050E-01	0.9827687E-02	0.9052303E-02	0.8357705E-02	0.7776292E-02
0.7251742E-02	0.6754079E-02	0.4285397E-02	0.7055696E-02	0.6260049E-02	0.5807970E-02	0.5365367E-02
0.1332951E-03	-0.	-0.7037930E-03	0.4206065E-02	-0.	-0.	-0.
-0.	-0.1077799E-02	-0.6992933E-03	-0.7962516E-03	-0.4611363E-03	-0.	-0.1358783E-03
0.2753449E-03	0.7656875E-03	0.6766708E-03	-0.4839935E-04	-0.8490468E-03	-0.5443958E-03	0.1126737E-02
0.4308694E-02	0.8492845E-02	-0.4539741E-02	-0.8487037E-02	0.1225166E-13	-0.8419264E-02	-0.9165363E-02
-0.8568131E-02	-0.7546538E-02	-0.7124541E-02	-0.6224854E-02	-0.2511809E-02	0.1569359E-02	0.1321167E-02
-0.1764429E-01	-0.1827394E-01	0.2622450E-13	-0.1793652E-01	-0.1355508E-01	-0.9156066E-02	-0.8173959E-02
-0.1323681E-01	-0.2011470E-01	-0.1934292E-01	-0.1359982E-01	-0.1505245E-01	0.1715163E-01	0.8689286E-02
0.1179966E-13	0.8254116E-02	-0.1059482E-02	-0.9198576E-02	-0.1415227E-01	-0.1486622E-01	-0.1292952E-01
-0.1172179E-01	-0.1032428E-01	-0.5793016E-02	0.2693218E-01	0.1270268E-01	-0.6581559E-13	0.1188207E-01
-0.4806730E-02	-0.1856659E-01	-0.2469190E-01	-0.2062347E-01	-0.1116722E-01	-0.6541335E-02	-0.5103435E-02
0.3799961E-02	0.1540999E-01	0.1008887E-01	-0.3982735E-13	0.9828104E-02	0.4866426E-02	0.3406351E-02
0.3878191E-02	0.2620234E-02	-0.1472058E-02	-0.6763559E-02	-0.7648904E-02	0.5884037E-03	-0.1153492E-01
-0.1054840E-02	0.1224447E-13	-0.5769614E-03	0.8530524E-02	0.8614979E-02	0.4569989E-02	0.5318019E-02
0.1301807E-01	0.2385977E-01	0.2540880E-01	0.6461315E-02	0.2541759E-02	0.8782223E-02	-0.1181962E-13
0.9094857E-02	0.1500261E-01	0.1498156E-01	0.1033153E-01	0.6639962E-02	0.6673745E-02	0.8979416E-02
0.7172827E-02	-0.4087018E-02	0.3059482E-01	0.2065076E-01	-0.5268432E-13	0.2019608E-01	0.1180285E-01
0.1301755E-01	0.1807657E-01	0.1618124E-01	0.4199041E-02	-0.1328099E-01	-0.2190916E-01	-0.8775090E-02
0.1124778E-02	0.1112956E-02	0.1073413E-02	0.1073412E-02	-0.5044338E-03	-0.7423879E-04	0.6645764E-02
0.4852280E-02	-0.2749358E-03	0.3958443E-03	-0.7902651E-02	-0.5314307E-02	0.1361050E-03	-0.8507221E-03
-0.8319990E-02	-0.8378790E-02	-0.3114072E-02	-0.2775362E-02	0.9050265E-02	0.9199171E-02	0.2562589E-02
0.1379260E-02	-0.1992187E-03	0.2360063E-04	-0.6449168E-04	-0.2692974E-04	0.8790823E-02	-0.2014669E-01
-0.7548065E-02	-0.1086123E-03	-0.9580857E-03	-0.5977215E-05	0.1058362E-01	0.4029844E-01	-0.3284431E-01
0.5746855E-03	-0.3973186E-03	0.3203604E-03	-0.8146004E-02	0.2351728E-01	0.3072396E-02	0.5686831E-04
0.9190044E-03	0.3570733E-06	-0.8501861E-02	-0.3683870E-01	0.2909909E-01	-0.6291719E-03	0.4324083E-03
-0.3520178E-03	-0.1465762E-01	0.1243988E-01	-0.2255425E-01	0.2540035E-03	0.4391744E-03	-0.9120880E-03
0.1680131E-02	0.6632736E-01	-0.7059262E-02	0.6520923E-03	0.1396105E-03	-0.3166969E-03	0.1351966E-01
-0.1295056E-01	0.2152463E-01	-0.1872770E-03	-0.4129097E-03	0.8371565E-03	-0.2608914E-02	-0.7003262E-01
0.7231947E-02	-0.7055902E-03	-0.1393686E-03	0.2705899E-03			

SA-5 RUN #1 MODE 11 XN = 3.027156

0.1367136E-02	0.1184549E-02	0.8215242E-03	0.4604215E-03	0.1139942E-03	-0.2088248E-03	-0.5098082E-03
-0.7912284E-03	-0.1066997E-02	-0.1317577E-02	-0.1548545E-02	-0.1757144E-02	-0.1938174E-02	-0.2114581E-02
-0.2268941E-02	-0.2407781E-02	-0.2518337E-02	-0.2606471E-02	-0.2607935E-02	-0.2541893E-02	-0.2427519E-02
-0.2277253E-02	-0.2112201E-02	0.4578945E-02	-0.2208546E-02	-0.1937094E-02	-0.1764196E-02	-0.1594576E-02
-0.	-0.	0.1661739E-03	-0.1572809E-02	-0.	-0.	-0.
-0.	-0.3173657E-02	0.2325147E-02	-0.5081360E-02	-0.3525597E-02	-0.	-0.1925022E-02
-0.1750513E-03	0.1194399E-02	0.6750060E-03	-0.3595125E-03	-0.1541175E-03	0.9043123E-03	0.1119809E-02
0.5122929E-03	-0.1241264E-02	0.2256111E-02	0.1228511E-02	-0.	0.1231989E-02	0.8760758E-03
0.1456803E-02	0.2422853E-02	0.2972471E-02	0.2636132E-02	0.1309609E-02	-0.3666037E-03	-0.1060771E-02
0.2660148E-02	0.3353116E-02	-0.	0.3341335E-02	0.3449681E-02	0.2753740E-02	0.1461055E-02
0.3621992E-04	-0.1221196E-02	-0.2090781E-02	-0.2707464E-02	-0.3607820E-02	-0.2239276E-02	0.8557631E-03
-0.	0.9421541E-03	0.2972727E-02	0.3660077E-02	0.3369200E-02	0.2893142E-02	0.2739375E-02
0.3070704E-02	0.3323103E-02	0.2305128E-02	-0.2857588E-02	-0.1822482E-02	-0.	-0.1762766E-02
-0.4499221E-03	0.1312185E-02	0.3132449E-02	0.4531286E-02	0.5227986E-02	0.5081439E-02	0.4324401E-02
0.3634073E-02	-0.4594112E-01	-0.1332439E-00	0.	-0.1360244E-00	-0.2073576E-00	-0.2612736E-00
-0.2887465E-00	-0.2880322E-00	-0.2599261E-00	-0.2071057E-00	-0.1334189E-00	-0.4548601E-01	-0.1137196E-01
-0.4094813E-01	0.	-0.4189203E-01	-0.6609705E-01	-0.8447614E-01	-0.9409930E-01	-0.9446117E-01
-0.8589716E-01	-0.6928036E-01	-0.4580125E-01	-0.1751380E-01	-0.4664539E-01	-0.1333143E-00	0.
-0.1360577E-00	-0.2067243E-00	-0.2604733E-00	-0.2877605E-00	-0.2861070E-00	-0.2563725E-00	-0.2020268E-00
-0.1289354E-00	-0.4578132E-01	-0.2116108E-01	-0.5314662E-01	0.	-0.5415440E-01	-0.8015014E-01
-0.9973170E-01	-0.1092458E-00	-0.1077316E-00	-0.9546029E-01	-0.7375299E-01	-0.4487190E-01	-0.1219239E-01
-0.1211459E-01	-0.1194292E-01	-0.1160142E-01	-0.1125802E-01	-0.1091694E-01	-0.1057634E-01	-0.1023781E-01
-0.9898090E-02	-0.9562277E-02	-0.9227851E-02	-0.8893381E-02	-0.8567474E-02	-0.8246472E-02	-0.7925547E-02
-0.7611811E-02	-0.7303127E-02	-0.7000985E-02	-0.6706281E-02	-0.6442363E-02	-0.6207917E-02	-0.5993508E-02
-0.5800035E-02	-0.5618129E-02	-0.7671118E-02	-0.5721332E-02	-0.5444545E-02	-0.5275685E-02	-0.5113225E-02
-0.3964187E-05	0.	0.5373652E-03	-0.4691098E-02	0.	0.	0.
0.	0.3339112E-02	0.3694583E-02	0.2830561E-02	0.2542358E-02	0.	0.2275817E-02
0.1916108E-02	0.1213185E-02	0.4414363E-03	-0.5409564E-03	-0.1648604E-02	-0.2587064E-02	-0.3328929E-02
-0.3838000E-02	-0.4606625E-02	0.3466579E-02	0.4595823E-02	0.5260190E-15	0.4631751E-02	0.5515763E-02
0.5932454E-02	0.5724066E-02	0.4973271E-02	0.3826010E-02	0.2452349E-02	0.7990383E-03	-0.1118914E-02
-0.4918490E-02	-0.6262938E-02	0.1311793E-14	-0.6263041E-02	-0.6705925E-02	-0.6418582E-02	-0.5473558E-02
-0.4061735E-02	-0.2276549E-02	-0.2306423E-03	0.1366756E-02	0.1855174E-02	-0.1227455E-02	0.1476196E-02
0.5766772E-15	0.1557322E-02	0.3742450E-02	0.5550620E-02	0.6807951E-02	0.7434414E-02	0.7419831E-02
0.6783509E-02	0.5836705E-02	0.4945693E-02	0.1755348E-02	-0.4296697E-03	-0.3234805E-14	-0.5342385E-03
-0.2839840E-02	-0.4985787E-02	-0.6608484E-02	-0.7552532E-02	-0.7891810E-02	-0.7733303E-02	-0.6653248E-02
-0.4371947E-02	0.4344908E-02	0.4648158E-02	-0.1963517E-14	0.4674108E-02	0.5220138E-02	0.5965013E-02
0.6470075E-02	0.6197284E-02	0.4808258E-02	0.2434903E-02	-0.2689348E-03	-0.2514012E-02	-0.5105794E-03
-0.1406311E-03	0.5987844E-15	-0.1408819E-03	-0.1647609E-03	-0.1118950E-02	-0.2621057E-02	-0.3672424E-02
-0.3596549E-02	-0.2398494E-02	-0.1009192E-02	-0.5181895E-03	-0.4483076E-02	-0.3653096E-02	-0.5667085E-15
-0.3585152E-02	-0.2319532E-02	-0.1193101E-02	-0.3649907E-03	0.4467758E-03	0.1541367E-02	0.2875670E-02
0.3993799E-02	0.4438996E-02	-0.4132355E-03	-0.1943284E-02	-0.2604098E-14	-0.2033337E-02	-0.3717352E-02
-0.4412120E-02	-0.3922488E-02	-0.3027464E-02	-0.2408515E-02	-0.2200274E-02	-0.1720164E-02	-0.2363486E-03
-0.6810233E-03	-0.6776687E-03	-0.6667042E-03	-0.6667042E-03	0.3642315E-03	0.5915864E-04	-0.6001595E-03
-0.6786117E-03	-0.3503772E-03	-0.3188556E-03	-0.1848795E-03	-0.6531766E-04	0.1553380E-02	0.1500410E-02
0.1524516E-03	0.7260005E-03	-0.9644233E-03	-0.1217227E-02	0.5433146E-03	0.7020577E-03	0.8894931E-04
0.1455054E-03	0.1993141E-03	-0.7853125E-05	-0.4960199E-05	0.3350174E-05	-0.1016258E-02	-0.3380773E-02
-0.5618517E-02	-0.1002499E-04	-0.7903844E-04	0.2587262E-04	0.3715233E-03	-0.3364606E-02	-0.1294172E-03
0.3479116E-04	-0.1275503E-04	0.1959831E-04	-0.8475923E-03	0.2477035E-02	0.5969127E-02	0.2057618E-04
0.6138128E-04	0.4264434E-05	0.1721327E-02	0.3110784E-02	0.2239382E-02	-0.3175923E-04	0.6689925E-04
-0.3867468E-04	-0.1989186E-02	-0.4415518E-02	-0.1427648E-02	0.3464430E-04	0.2183962E-04	-0.7381466E-04
-0.4588358E-02	0.5429589E-02	-0.4319828E-03	0.2069724E-04	0.6149199E-05	0.7026065E-04	0.1857858E-02
0.5883173E-02	0.1067008E-02	0.2438645E-04	-0.2258501E-04	0.9004112E-04	0.4915141E-02	-0.6271731E-02
0.8757336E-03	-0.7657971E-04	-0.9426564E-05	-0.6578404E-04			

SA-5 RUN #1 MODE 12 XN = 2.417463

0.6633521E-01	0.6537892E-01	0.6346380E-01	0.6154786E-01	0.5964189E-01	0.5774389E-01	0.5586154E-01
0.5399161E-01	0.5212710E-01	0.5028033E-01	0.4846474E-01	0.4667985E-01	0.4492255E-01	0.4319262E-01
0.4148896E-01	0.3982204E-01	0.3820146E-01	0.3664657E-01	0.3527804E-01	0.3409066E-01	0.3305328E-01
0.3214563E-01	0.3130989E-01	0.6580591E-01	0.3178879E-01	0.3051543E-01	0.2976509E-01	0.2905769E-01
0.	0.	-0.2431932E-02	0.2749558E-01	0.	0.	0.
0.	-0.4150781E-01	-0.4040189E-01	-0.4214751E-01	-0.4208301E-01	0.	-0.4195812E-01
-0.4169477E-01	-0.4080425E-01	-0.3908470E-01	-0.3551507E-01	-0.2908582E-01	-0.2067607E-01	-0.1116695E-01
-0.9082226E-03	0.1237168E-01	-0.4157171E-01	0.1077916E-02	0.	0.2489252E-02	0.3835624E-01
0.6723449E-01	0.8525181E-01	0.9170825E-01	0.8711528E-01	0.7255914E-01	0.4969341E-01	0.2152216E-01
-0.3281599E-01	-0.2966021E-02	0.	-0.1973286E-02	0.2320024E-01	0.4356376E-01	0.5642190E-01
0.6131203E-01	0.5856730E-01	0.4893286E-01	0.3349828E-01	0.1425071E-01	0.4158197E-01	-0.1125395E-02
0.	-0.2535869E-02	-0.3844886E-01	-0.6735869E-01	-0.8539508E-01	-0.9184217E-01	-0.8722494E-01
-0.7263011E-01	-0.4971148E-01	-0.2148370E-01	0.3288025E-01	0.3006316E-02	0.	0.2023209E-02
-0.2316263E-01	-0.4354732E-01	-0.5641828E-01	-0.6132106E-01	-0.5859537E-01	-0.4897839E-01	-0.3355456E-01
-0.1431847E-01	-0.5638458E-02	0.4172281E-02	-0.	0.4499222E-02	0.1279510E-01	0.1956579E-01
0.2375584E-01	0.2504273E-01	0.2343495E-01	0.1921891E-01	0.1294695E-01	0.5510533E-02	-0.4586649E-01
0.1814051E-01	-0.	0.2028495E-01	0.7447639E-01	0.1187265E-00	0.1463333E-00	0.1554381E-00
0.1461009E-00	0.1200649E-00	0.8045453E-01	0.3247905E-01	0.5786595E-02	-0.4351192E-02	-0.
-0.4690762E-02	-0.1325546E-01	-0.2023989E-01	-0.2455245E-01	-0.2586531E-01	-0.2418747E-01	-0.1981648E-01
-0.1331956E-01	-0.5614820E-02	0.4593001E-01	-0.1820390E-01	-0.	-0.2035197E-01	-0.7465402E-01
-0.1189843E-00	-0.1466433E-00	-0.1557645E-00	-0.1464095E-00	-0.1203245E-00	-0.8063704E-01	-0.3256875E-01
0.1187966E-00	0.1169393E-00	0.1132287E-00	0.1095230E-00	0.1058325E-00	0.1021543E-00	0.9849818E-01
0.9485897E-01	0.9122867E-01	0.8763804E-01	0.8407710E-01	0.8058845E-01	0.7713649E-01	0.7372844E-01
0.7036582E-01	0.6707049E-01	0.6384694E-01	0.6073487E-01	0.5793646E-01	0.5545041E-01	0.5321830E-01
0.5120518E-01	0.4931658E-01	0.1026763E-00	0.5040154E-01	0.4750105E-01	0.4576021E-01	0.4409079E-01
0.2426733E-05	-0.	-0.3242555E-02	0.4022140E-01	-0.	-0.	-0.
-0.	-0.7035773E-01	-0.6892005E-01	-0.7138682E-01	-0.7158802E-01	-0.	-0.7165411E-01
-0.7147995E-01	-0.7010594E-01	-0.6697202E-01	-0.6056023E-01	-0.4949105E-01	-0.3535507E-01	-0.1950194E-01
-0.2631778E-02	0.1854465E-01	-0.5472421E-01	-0.6694961E-01	-0.3367238E-15	-0.6719292E-01	-0.7478186E-01
-0.7667926E-01	-0.7194430E-01	-0.6139759E-01	-0.4671374E-01	-0.2993783E-01	-0.1371127E-01	-0.8789253E-03
0.7591048E-01	0.9795027E-01	-0.1543358E-14	0.9845044E-01	0.1129494E-00	0.1182008E-00	0.1125196E-00
0.9711999E-01	0.7465296E-01	0.4844236E-01	0.2264618E-01	0.1835657E-02	0.5482445E-01	0.6667404E-01
-0.5588356E-15	0.6691894E-01	0.7420261E-01	0.7589230E-01	0.7107370E-01	0.6053581E-01	0.4597054E-01
0.2938524E-01	0.1336135E-01	0.7187609E-03	-0.7519707E-01	-0.9704664E-01	0.3461982E-14	-0.9754436E-01
-0.1119018E-00	-0.1171175E-00	-0.1114834E-00	-0.9620094E-01	-0.7393150E-01	-0.4795261E-01	-0.2238940E-01
-0.1785054E-02	-0.7991487E-01	-0.8218457E-01	0.1989193E-14	-0.8223854E-01	-0.8369171E-01	-0.8217206E-01
-0.7620707E-01	-0.6560672E-01	-0.5114292E-01	-0.3424996E-01	-0.1686225E-01	-0.1055663E-02	0.1107265E-01
0.1095967E-01	-0.5330111E-15	0.1095626E-01	0.1080246E-01	0.1025400E-01	0.9164050E-02	0.7578845E-02
0.5625927E-02	0.3485431E-02	0.1344904E-02	-0.6048502E-03	0.8037974E-01	0.8275132E-01	0.5010542E-15
0.8282267E-01	0.8439730E-01	0.8299061E-01	0.7708397E-01	0.6644697E-01	0.5187522E-01	0.3480550E-01
0.1719816E-01	0.1160038E-02	-0.1086905E-01	-0.1125091E-01	0.2561242E-14	-0.1125002E-01	-0.1148952E-01
-0.1123355E-01	-0.1028983E-01	-0.8686727E-02	-0.6607873E-02	-0.4252980E-02	-0.1841860E-02	0.3718357E-03
0.6289398E-04	0.6282463E-04	0.6258922E-04	0.6258923E-04	-0.4517781E-04	-0.1631978E-04	0.1469147E-01
0.1465654E-01	0.1033711E-01	0.1031985E-01	-0.1483519E-01	-0.1479116E-01	-0.1023077E-01	-0.1021124E-01
0.2204236E-02	0.3247359E-02	0.9910420E-02	0.1647265E-01	-0.2256062E-02	-0.3326971E-02	-0.9830994E-02
-0.1641088E-01	-0.9830489E-05	0.1610667E-03	-0.1050141E-03	-0.3196091E-06	0.1769285E-01	0.1800146E-01
0.2670146E-01	0.1642179E-05	0.1538591E-03	-0.9614935E-04	0.5103046E-02	0.2770340E-01	-0.1892128E-01
0.3499431E-05	-0.1298309E-03	-0.1717743E-03	-0.1776483E-01	-0.1799147E-01	-0.2673165E-01	-0.1960602E-05
-0.1530471E-03	0.9783749E-04	-0.5072195E-02	-0.2764323E-01	0.1886036E-01	-0.4493597E-05	0.1291020E-03
0.1699320E-03	0.1708622E-01	0.2619644E-01	0.4151694E-02	0.1959242E-03	-0.1196426E-03	0.2236227E-04
0.2537891E-01	-0.1684075E-01	0.7510495E-02	-0.1165586E-03	-0.1699281E-03	-0.7874273E-05	-0.1718922E-01
-0.2621316E-01	-0.4179536E-02	-0.1951059E-03	0.1193726E-03	-0.2277598E-04	-0.2527023E-01	0.1680248E-01
-0.7529285E-02	0.1157157E-03	0.1699793E-03	0.6911659E-05			

SA-5 RUN #1 MODE 13 XN = 2.392992

0.1217725E-00	0.1199547E-00	0.1163199E-00	0.1126895E-00	0.1090709E-00	0.1054722E-00	0.1018938E-00
0.9833120E-01	0.9477926E-01	0.9125964E-01	0.8778787E-01	0.8437937E-01	0.8101515E-01	0.7768752E-01
0.7441575E-01	0.7120370E-01	0.6807106E-01	0.6505404E-01	0.6235721E-01	0.5998287E-01	0.5786923E-01
0.5598027E-01	0.5421991E-01	0.1154152E-00	0.5523135E-01	0.5253733E-01	0.5092722E-01	0.4939384E-01
0.	0.	-0.4010735E-02	0.4581090E-01	0.	0.	0.
0.	-0.7663147E-01	-0.7401610E-01	-0.7816837E-01	-0.7816589E-01	0.	-0.7799913E-01
-0.7754348E-01	-0.7591001E-01	-0.7292010E-01	-0.6700749E-01	-0.5643081E-01	-0.4213355E-01	-0.2522875E-01
-0.5894408E-02	0.1862747E-01	-0.4230246E-01	0.2585784E-02	0.	0.4054906E-02	0.4149003E-01
0.7133076E-01	0.8962409E-01	0.9565577E-01	0.9002806E-01	0.7403388E-01	0.4963913E-01	0.2009010E-01
0.2384638E-01	0.1871548E-02	0.	0.1145632E-02	-0.1725257E-01	-0.3201028E-01	-0.4116070E-01
-0.4436271E-01	-0.4187977E-01	-0.3434317E-01	-0.2269655E-01	-0.8512873E-02	0.4225287E-01	-0.2548838E-02
0.	-0.4001981E-02	-0.4136859E-01	-0.7115320E-01	-0.8941558E-01	-0.9544725E-01	-0.8984870E-01
-0.7390825E-01	-0.4958743E-01	-0.2012660E-01	-0.2366857E-01	-0.1557392E-02	0.	-0.8338326E-03
0.1767657E-01	0.3251158E-01	0.4168370E-01	0.4487315E-01	0.4233998E-01	0.3472092E-01	0.2296470E-01
0.8656605E-02	-0.3640268E-01	0.3037205E-01	-0.	0.3257776E-01	0.8865721E-01	0.1339329E-00
0.1614449E-00	0.1692075E-00	0.1572499E-00	0.1275158E-00	0.8356709E-01	0.3110472E-01	-0.1258236E-01
0.4478914E-02	-0.	0.5046241E-02	0.1943597E-01	0.3121282E-01	0.3862090E-01	0.4111131E-01
0.3868160E-01	0.3180284E-01	0.2139906E-01	0.8927598E-02	0.3602219E-01	-0.3162873E-01	-0.
-0.3386485E-01	-0.9066779E-01	-0.1365004E-00	-0.1643025E-00	-0.1720636E-00	-0.1598207E-00	-0.1295537E-00
-0.8487359E-01	-0.3155852E-01	0.1244221E-01	-0.5018624E-02	-0.	-0.5600034E-02	-0.2033229E-01
-0.3236116E-01	-0.3990779E-01	-0.4240171E-01	-0.3984291E-01	-0.3272294E-01	-0.2198452E-01	-0.9123642E-02
-0.9045552E-02	-0.8917660E-02	-0.8656644E-02	-0.8398707E-02	-0.8138591E-02	-0.7882950E-02	-0.7627741E-02
-0.7372223E-02	-0.7117745E-02	-0.6865064E-02	-0.6621514E-02	-0.6379207E-02	-0.6138402E-02	-0.5903250E-02
-0.5673530E-02	-0.5444280E-02	-0.5223421E-02	-0.5021106E-02	-0.4835161E-02	-0.4676467E-02	-0.4541759E-02
-0.4423884E-02	-0.4316710E-02	-0.1048100E-01	-0.4380176E-02	-0.4213550E-02	-0.4117751E-02	-0.4032010E-02
-0.1483494E-05	-0.	0.2297779E-03	-0.3894148E-02	-0.	-0.	-0.
-0.	0.7580826E-02	0.7478981E-02	0.7934281E-02	0.8193645E-02	-0.	0.8413327E-02
0.8665197E-02	0.8976218E-02	0.9026164E-02	0.8665602E-02	0.7632042E-02	0.6037393E-02	0.4107584E-02
0.1952182E-02	-0.6898267E-03	0.4266647E-01	0.5628566E-01	-0.5654175E-15	0.5659577E-01	0.6563047E-01
0.6910448E-01	0.6610109E-01	0.5747791E-01	0.4489540E-01	0.3020898E-01	0.1564778E-01	0.3748729E-02
0.7921868E-01	0.1041569E-00	-0.2308376E-14	0.1047139E-00	0.1210103E-00	0.1268060E-00	0.1204832E-00
0.1039014E-00	0.8022232E-01	0.5293386E-01	0.2610243E-01	0.4304341E-02	-0.4263674E-01	-0.5651504E-01
-0.8293295E-15	-0.5684334E-01	-0.6607831E-01	-0.6969342E-01	-0.6675748E-01	-0.5813637E-01	-0.4546950E-01
-0.3064618E-01	-0.1592988E-01	-0.3880361E-02	-0.7920078E-01	-0.1044641E-00	0.5239560E-14	-0.1050323E-00
-0.1216002E-00	-0.1275701E-00	-0.1213283E-00	-0.1047112E-00	-0.8092312E-01	-0.5345658E-01	-0.2642907E-01
-0.4455123E-02	-0.2192883E-01	-0.2288611E-01	0.2951740E-14	-0.2291603E-01	-0.2379375E-01	-0.2376064E-01
-0.2218678E-01	-0.1911155E-01	-0.1485311E-01	-0.9927342E-02	-0.4853401E-02	-0.1873057E-03	0.7278384E-01
0.7564763E-01	-0.8067899E-15	0.7577805E-01	0.7832970E-01	0.7798024E-01	0.7300844E-01	0.6335765E-01
0.5010415E-01	0.3471483E-01	0.1884802E-01	0.4199629E-02	0.2173832E-01	0.2261603E-01	0.7539862E-15
0.2265880E-01	0.2345995E-01	0.2332684E-01	0.2169295E-01	0.1858271E-01	0.1434054E-01	0.9475413E-02
0.4519537E-02	-0.4388870E-05	-0.7215001E-01	-0.7468471E-01	0.3828683E-14	-0.7480775E-01	-0.7705661E-01
-0.7648468E-01	-0.7142307E-01	-0.6183345E-01	-0.4878566E-01	-0.3372105E-01	-0.1825600E-01	-0.4011226E-02
0.2278544E-04	0.2285904E-04	0.2305654E-04	0.2305654E-04	-0.1806998E-04	-0.8246850E-05	0.1562613E-01
0.1560121E-01	-0.8356124E-02	-0.8341897E-02	-0.1550079E-01	-0.1546953E-01	0.8220869E-02	0.8203579E-02
0.9707056E-02	0.1602514E-01	0.2914016E-02	0.4804676E-02	-0.9715785E-02	-0.1602978E-01	-0.2896569E-02
-0.4804419E-02	-0.3867950E-05	-0.1937265E-04	-0.1918931E-03	-0.4016729E-06	0.1260777E-01	0.2861009E-01
-0.2357082E-02	-0.9783934E-05	-0.4749529E-04	-0.1908293E-03	-0.1381671E-01	-0.1886781E-02	-0.2897951E-01
0.3170628E-05	-0.1966725E-03	0.8120727E-05	-0.1244721E-01	-0.2853842E-01	0.2352165E-02	0.8724570E-05
0.4826105E-04	0.1881799E-03	0.1373497E-01	0.1879798E-02	0.2890606E-01	-0.3833458E-05	0.1968071E-03
-0.6386158E-05	0.2685791E-01	-0.1401643E-02	0.8157489E-02	-0.2516858E-04	-0.1869606E-03	0.1608325E-04
-0.1768743E-02	-0.2770272E-01	-0.5031960E-03	-0.2180162E-03	0.2945644E-04	-0.6316556E-04	-0.2683877E-01
0.1368798E-02	-0.8186363E-02	0.2390780E-04	0.1883612E-03	-0.1790723E-04	0.1689671E-02	0.2768185E-01
0.4822118E-03	0.2198353E-03	-0.2981694E-04	0.6322790E-04			

SA-5 RUN #1 MODE 14 XN = 2.382129

0.1038505E-00	0.1022637E-00	0.9909209E-01	0.9592700E-01	0.9276990E-01	0.8962933E-01	0.8650338E-01
0.8338731E-01	0.8028196E-01	0.7720201E-01	0.7416181E-01	0.7117835E-01	0.6822788E-01	0.6530851E-01
0.6243772E-01	0.5961770E-01	0.5686352E-01	0.5421069E-01	0.5182701E-01	0.4972048E-01	0.4783648E-01
0.4614395E-01	0.4456268E-01	0.9360566E-01	0.4547172E-01	0.4304827E-01	0.4159619E-01	0.4021105E-01
-0.	-0.	-0.3247361E-02	0.3703438E-01	-0.	-0.	-0.
-0.	-0.6346546E-01	-0.6237241E-01	-0.6450622E-01	-0.6495316E-01	-0.	-0.6528906E-01
-0.6550164E-01	-0.6488911E-01	-0.6261561E-01	-0.5745186E-01	-0.4812180E-01	-0.3577505E-01	-0.2146403E-01
-0.5729183E-02	0.1463660E-01	-0.2657555E-01	0.1696111E-02	-0.	0.2626535E-02	0.2627383E-01
0.4508416E-01	0.5655254E-01	0.6030610E-01	0.5675323E-01	0.4664676E-01	0.3103328E-01	0.1177403E-01
0.4306710E-01	0.3548127E-02	-0.	0.2235407E-02	-0.3103209E-01	-0.5783847E-01	-0.7460190E-01
-0.8072600E-01	-0.7666517E-01	-0.6343668E-01	-0.4251683E-01	-0.1657313E-01	0.2652697E-01	-0.1627221E-02
-0.	-0.2547490E-02	-0.2610244E-01	-0.4484338E-01	-0.5627377E-01	-0.6003303E-01	-0.5652036E-01
-0.4648394E-01	-0.3096611E-01	-0.1181674E-01	-0.4304015E-01	-0.3596753E-02	-0.	-0.2295895E-02
0.3091066E-01	0.5767665E-01	0.7441190E-01	0.8054033E-01	0.7651417E-01	0.6334242E-01	0.4249289E-01
0.1663212E-01	-0.3777305E-01	0.3188040E-01	0.	0.3418884E-01	0.9276295E-01	0.1399417E-00
0.1684408E-00	0.1763685E-00	0.1638988E-00	0.1330219E-00	0.8714870E-01	0.3192015E-01	0.9351997E-02
-0.2943938E-02	0.	-0.3356344E-02	-0.1378190E-01	-0.2230466E-01	-0.2763276E-01	-0.2940453E-01
-0.2760867E-01	-0.2259424E-01	-0.1498265E-01	-0.5802244E-02	0.3759727E-01	-0.3222689E-01	0.
-0.3454205E-01	-0.9325457E-01	-0.1405381E-00	-0.1690901E-00	-0.1770108E-00	-0.1644741E-00	-0.1334795E-00
-0.8744754E-01	-0.3203543E-01	-0.9079102E-02	0.3720591E-02	0.	0.4148001E-02	0.1497930E-01
0.2381984E-01	0.2930334E-01	0.3106667E-01	0.2910609E-01	0.2378328E-01	0.1575091E-01	0.6079007E-02
-0.7462011E-01	-0.7339676E-01	-0.7094632E-01	-0.6850229E-01	-0.6606359E-01	-0.6363728E-01	-0.6122319E-01
-0.5881756E-01	-0.5641844E-01	-0.5404191E-01	-0.5169257E-01	-0.4938264E-01	-0.4709414E-01	-0.4483514E-01
-0.4260721E-01	-0.4041488E-01	-0.3827076E-01	-0.3620752E-01	-0.3432914E-01	-0.3264776E-01	-0.3112859E-01
-0.2974464E-01	-0.2843898E-01	-0.5982654E-01	-0.2919226E-01	-0.2717663E-01	-0.2596181E-01	-0.2479647E-01
-0.4241260E-05	0.	0.1764564E-02	-0.2210418E-01	0.	0.	0.
0.	0.4366413E-01	0.4278835E-01	0.4449178E-01	0.4482406E-01	0.	0.4504238E-01
0.4514966E-01	0.4464112E-01	0.4297625E-01	0.3924537E-01	0.3254188E-01	0.2382442E-01	0.1398607E-01
0.3488610E-02	-0.9539112E-02	0.7366134E-01	0.9264721E-01	-0.5579013E-15	0.9305603E-01	0.1052877E-00
0.1092798E-00	0.1035986E-00	0.8934782E-01	0.6894399E-01	0.4534717E-01	0.2235150E-01	0.4124257E-02
0.5033563E-01	0.6750690E-01	-0.2085692E-14	0.6790862E-01	0.7947999E-01	0.8435384E-01	0.8119515E-01
0.7088769E-01	0.5532116E-01	0.3688759E-01	0.1867278E-01	0.4107829E-02	-0.7384635E-01	-0.9288314E-01
-0.7768670E-15	-0.9331059E-01	-0.1055676E-00	-0.1095695E-00	-0.1038825E-00	-0.8960585E-01	-0.6914385E-01
-0.4547736E-01	-0.2240901E-01	-0.4118203E-02	-0.5074558E-01	-0.6811858E-01	0.4807797E-14	-0.6852601E-01
-0.8026427E-01	-0.8520162E-01	-0.8204252E-01	-0.7164975E-01	-0.5594147E-01	-0.3731847E-01	-0.1891244E-01
-0.4176259E-02	0.1589052E-01	0.1680023E-01	0.2742925E-14	0.1683841E-01	0.1751506E-01	0.1748158E-01
0.1645506E-01	0.1436599E-01	0.1142779E-01	0.7927097E-02	0.4273439E-02	0.8905845E-03	0.7544314E-01
0.7855287E-01	-0.7595004E-15	0.7868733E-01	0.8144313E-01	0.8154006E-01	0.7720337E-01	0.6794123E-01
0.5441518E-01	0.3802298E-01	0.2087223E-01	0.5275102E-02	-0.1647978E-01	-0.1748884E-01	0.7135504E-15
-0.1752098E-01	-0.1832037E-01	-0.1843641E-01	-0.1747567E-01	-0.1536176E-01	-0.1230449E-01	-0.8615267E-02
-0.4711554E-02	-0.1066278E-02	-0.7510540E-01	-0.7766553E-01	0.3560545E-14	-0.7779240E-01	-0.8006453E-01
-0.7979275E-01	-0.7528486E-01	-0.6607839E-01	-0.5279233E-01	-0.3678220E-01	-0.2009992E-01	-0.4962179E-02
-0.9969864E-05	-0.1007489E-04	-0.1041441E-04	-0.1041441E-04	0.9752489E-05	0.2468596E-05	0.1000127E-01
0.9987062E-02	-0.1425066E-01	-0.1422495E-01	-0.9823978E-02	-0.9808984E-02	0.1408046E-01	0.1405093E-01
0.9465285E-02	0.1587238E-01	-0.1187020E-02	-0.2402021E-02	-0.9458529E-02	-0.1585425E-01	0.1173257E-02
0.2385982E-02	0.1265204E-05	-0.9801341E-04	-0.1560875E-03	0.6593125E-07	0.5451615E-02	0.2310368E-01
-0.1539260E-01	0.3139733E-05	-0.1073082E-03	-0.1725042E-03	-0.1771080E-01	-0.1514120E-01	-0.2255369E-01
-0.4026421E-05	-0.1572226E-03	0.9568794E-04	-0.5273073E-02	-0.2307386E-01	0.1544696E-01	-0.3350386E-05
0.1076613E-03	0.1694735E-03	0.1760435E-01	0.1507454E-01	0.2253884E-01	0.4422534E-05	0.1572891E-03
-0.9322016E-04	0.2091997E-01	-0.1412883E-01	0.7173126E-02	-0.1211854E-03	-0.1604991E-03	-0.2981713E-05
-0.1374353E-01	-0.2220269E-01	-0.4035645E-02	-0.1820628E-03	0.1076614E-03	-0.2279981E-04	-0.2086228E-01
0.1413163E-01	-0.7182420E-02	0.1195645E-03	0.1619395E-03	0.1903659E-05	0.1364058E-01	0.2222211E-01
0.4032182E-02	0.1840772E-03	-0.1081654E-03	0.2411059E-04			

SA-5 RUN #1 MODE 15 XN= 1.830392

0.2100787E-00	0.2039141E-00	0.1915931E-00	0.1792841E-00	0.1670011E-00	0.1547536E-00	0.1425457E-00
0.1303655E-00	0.1182084E-00	0.1061055E-00	0.9409170E-01	0.8218800E-01	0.7034776E-01	0.5858197E-01
0.4690620E-01	0.3533306E-01	0.2389029E-01	0.1264896E-01	0.1927117E-02	-0.8269294E-02	-0.1804237E-01
-0.2745977E-01	-0.3667441E-01	-0.9596453E-01	-0.3134684E-01	-0.4577527E-01	-0.5476073E-01	-0.6363710E-01
-0.	-0.	0.5124522E-02	-0.8587388E-01	-0.	-0.	-0.
-0.	-0.2756994E-01	-0.2292923E-01	-0.3003250E-01	-0.3166949E-01	-0.	-0.3294146E-01
-0.3414489E-01	-0.3483896E-01	-0.3381940E-01	-0.3116062E-01	-0.2739447E-01	-0.2425846E-01	-0.2304438E-01
-0.2516176E-01	-0.3688385E-01	-0.1690147E-01	0.6344832E-02	-0.	0.7069523E-02	0.2582304E-01
0.3951607E-01	0.4594255E-01	0.4507720E-01	0.3731595E-01	0.2363028E-01	0.5126508E-02	-0.1658136E-01
-0.9378719E-03	-0.1862186E-02	-0.	-0.1884985E-02	-0.2539234E-02	-0.2853706E-02	-0.2761038E-02
-0.2253532E-02	-0.1373985E-02	-0.1773307E-03	0.1291894E-02	0.3011429E-02	0.1692379E-01	-0.6341404E-02
-0.	-0.7067491E-02	-0.2583590E-01	-0.3953958E-01	-0.4597221E-01	-0.4510523E-01	-0.3733756E-01
-0.2363888E-01	-0.5113844E-02	0.1662047E-01	0.8997078E-03	0.1857962E-02	-0.	0.1885156E-02
0.2571182E-02	0.2907652E-02	0.2829619E-02	0.2328024E-02	0.1443153E-02	0.2275993E-03	-0.1274872E-02
-0.3040385E-02	-0.1009966E-01	0.8442845E-02	0.	0.9035349E-02	0.2418266E-01	0.3558447E-01
0.4124485E-01	0.4091177E-01	0.3473129E-01	0.2349011E-01	0.8183274E-02	-0.9773140E-02	-0.1224473E-01
0.3379980E-02	0.	0.3887050E-02	0.1685329E-01	0.2691971E-01	0.3237215E-01	0.3291546E-01
0.2854961E-01	0.1988356E-01	0.7775759E-02	-0.6489257E-02	0.1009823E-01	-0.8364228E-02	0.
-0.8950532E-02	-0.2403394E-01	-0.3539043E-01	-0.4103438E-01	-0.4071284E-01	-0.3457328E-01	-0.2339620E-01
-0.8175967E-02	0.9679122E-02	0.1224091E-01	-0.3453008E-02	0.	-0.3961591E-02	-0.1697058E-01
-0.2708944E-01	-0.3255339E-01	-0.3307889E-01	-0.2867059E-01	-0.1993792E-01	-0.7754951E-02	0.6592461E-02
0.7293585E-01	0.7083571E-01	0.6662843E-01	0.6243043E-01	0.5823612E-01	0.5406059E-01	0.4989865E-01
0.4574306E-01	0.4159933E-01	0.3747470E-01	0.3338527E-01	0.2933243E-01	0.2530165E-01	0.2129800E-01
0.1733159E-01	0.1339339E-01	0.9506895E-02	0.5706569E-02	0.2077870E-02	-0.1359507E-02	-0.4642235E-02
-0.7799821E-02	-0.1088423E-01	-0.2735450E-01	-0.9098366E-02	-0.1393030E-01	-0.1693648E-01	-0.1989582E-01
0.1159283E-04	0.	0.1468303E-02	-0.2730340E-01	0.	0.	0.
0.	-0.1266084E-01	-0.1028370E-01	-0.1413571E-01	-0.1476716E-01	0.	-0.1521420E-01
-0.1560002E-01	-0.1570836E-01	-0.1508080E-01	-0.1352816E-01	-0.1105983E-01	-0.8619514E-02	-0.6991752E-02
-0.6830079E-02	-0.9996058E-02	-0.2464978E-02	-0.7771026E-02	0.1728437E-14	-0.7920723E-02	-0.1194621E-01
-0.1445979E-01	-0.1500266E-01	-0.1365418E-01	-0.1078760E-01	-0.6898009E-02	-0.2570866E-02	0.1509307E-02
-0.1481633E-01	-0.9713000E-01	0.6626397E-14	-0.9952000E-01	-0.1628779E-00	-0.2044157E-00	-0.2170460E-00
-0.2022563E-00	-0.1649960E-00	-0.1124202E-00	-0.5370322E-01	0.1785853E-03	0.4306918E-02	0.9717538E-02
0.2423638E-14	0.9870085E-02	0.1390093E-01	0.1628481E-01	0.1656308E-01	0.1484659E-01	0.1155497E-01
0.7229863E-02	0.2525093E-02	-0.1823519E-02	0.1537054E-01	0.9531825E-01	-0.1490795E-13	0.9763677E-01
0.1591174E-00	0.1993233E-00	0.2113704E-00	0.1967212E-00	0.1602089E-00	0.1088014E-00	0.5142620E-01
-0.1253225E-02	-0.2588329E-01	-0.3968060E-01	-0.8508985E-14	-0.4022820E-01	-0.5298046E-01	-0.6303450E-01
-0.6788356E-01	-0.6661798E-01	-0.5974986E-01	-0.4856434E-01	-0.3528435E-01	-0.2264483E-01	0.2799396E-01
0.4433187E-01	0.2356387E-14	0.4498785E-01	0.6034807E-01	0.7271540E-01	0.7896969E-01	0.7797252E-01
0.7026586E-01	0.5744563E-01	0.4228400E-01	0.2818360E-01	0.2773420E-01	0.4166245E-01	-0.2208810E-14
0.4221429E-01	0.5512733E-01	0.6529070E-01	0.7010325E-01	0.6861413E-01	0.6133187E-01	0.4959341E-01
0.3570372E-01	0.2249447E-01	-0.2648017E-01	-0.4303711E-01	-0.1109696E-13	-0.4369980E-01	-0.5923629E-01
-0.7180242E-01	-0.7828777E-01	-0.7754202E-01	-0.7008239E-01	-0.5749206E-01	-0.4253316E-01	-0.2860119E-01
0.1347762E-04	0.1355097E-04	0.1379696E-04	0.1379695E-04	-0.1572517E-04	-0.7720568E-05	-0.8863818E-02
-0.8824788E-02	0.1344625E-02	0.1335001E-02	0.8783472E-02	0.8732976E-02	-0.1256928E-02	-0.1244040E-02
-0.1647138E-01	-0.1599564E-01	-0.1400830E-01	-0.1335722E-01	0.1661874E-01	0.1622103E-01	0.1387212E-01
0.1313089E-01	-0.3748094E-05	-0.4115370E-04	0.1438156E-03	-0.2539040E-05	-0.7009626E-02	-0.4106968E-01
-0.1025012E-01	-0.2522432E-04	-0.4576281E-04	0.8914583E-04	0.1688935E-01	-0.1423040E-01	0.4829604E-01
0.1466478E-05	0.3299357E-03	-0.3151024E-04	0.6863129E-02	0.4130709E-01	0.9736616E-02	0.1976921E-04
0.4241196E-04	-0.8854545E-04	-0.1648308E-01	0.1457747E-01	-0.4845282E-01	-0.6473071E-05	-0.3248493E-03
0.2782064E-04	-0.4227226E-01	-0.1199596E-01	-0.3244954E-02	-0.5092462E-04	0.1407092E-03	-0.8705425E-04
-0.1975688E-01	0.4146954E-01	-0.3288681E-02	0.3482623E-04	0.1433461E-03	0.1044992E-04	0.4232859E-01
0.1181536E-01	0.3217122E-02	0.5549430E-04	-0.1416914E-03	0.8396509E-04	0.1952856E-01	-0.4169044E-01
0.3235058E-02	-0.3799305E-04	-0.1400240E-03	-0.1866096E-04			

SA-5 RUN #1 MODE 16 XN = 1.828028

0.2203017E-00	0.2138329E-00	0.2009048E-00	0.1879850E-00	0.1750940E-00	0.1622502E-00	0.1494510E-00
0.1366891E-00	0.1239459E-00	0.1112712E-00	0.9868663E-01	0.8621793E-01	0.7383236E-01	0.6151122E-01
0.4929352E-01	0.3717884E-01	0.2520787E-01	0.1343764E-01	0.2224426E-02	-0.8438348E-02	-0.1865904E-01
-0.2850842E-01	-0.3814844E-01	-0.9267189E-01	-0.3257444E-01	-0.4766465E-01	-0.5706863E-01	-0.6636373E-01
-0.	-0.	0.5364307E-02	-0.9015360E-01	-0.	-0.	-0.
-0.	-0.3389111E-01	-0.2294597E-01	-0.3820956E-01	-0.3801722E-01	-0.	-0.3727167E-01
-0.3589943E-01	-0.3326721E-01	-0.3128712E-01	-0.2982511E-01	-0.2865149E-01	-0.2759039E-01	-0.2718975E-01
-0.2683919E-01	-0.3842119E-01	-0.1441126E-01	0.8274959E-02	-0.	0.8933287E-02	0.2638655E-01
0.3879509E-01	0.4431627E-01	0.4256693E-01	0.3383327E-01	0.1947969E-01	0.1772606E-02	-0.1666210E-01
0.3399040E-02	-0.3559451E-02	-0.	-0.3757391E-02	-0.8949893E-02	-0.1251070E-01	-0.1394375E-01
-0.1315390E-01	-0.1029183E-01	-0.5870662E-02	-0.7249114E-03	0.4275984E-02	0.1443211E-01	-0.8266448E-02
-0.	-0.8893383E-02	-0.2635500E-01	-0.3875366E-01	-0.4426498E-01	-0.4251177E-01	-0.3378635E-01
-0.1944962E-01	-0.1765313E-02	0.1663793E-01	-0.3920351E-02	0.2010007E-02	-0.	0.2165885E-02
0.6540824E-02	0.9496059E-02	0.1061997E-01	0.9869192E-02	0.7348951E-02	0.3543840E-02	-0.7572652E-03
-0.4762766E-02	-0.1172628E-01	0.9991051E-02	0.	0.1065648E-01	0.2813155E-01	0.4188276E-01
0.4968868E-01	0.5040149E-01	0.4336520E-01	0.2945794E-01	0.1101086E-01	-0.8944584E-02	-0.7147841E-02
0.4496774E-02	0.	0.4849677E-02	0.1420861E-01	0.2144825E-01	0.2540938E-01	0.2556683E-01
0.2172208E-01	0.1438414E-01	0.4706342E-02	-0.5833341E-02	0.1242786E-01	-0.7990165E-02	0.
-0.8612006E-02	-0.2506472E-01	-0.3805923E-01	-0.4548711E-01	-0.4622520E-01	-0.3961638E-01	-0.2649808E-01
-0.9138654E-02	0.9544594E-02	0.7503894E-02	-0.3599287E-02	0.	-0.3937208E-02	-0.1288156E-01
-0.1985305E-01	-0.2367209E-01	-0.2384272E-01	-0.2016697E-01	-0.1313590E-01	-0.3886672E-02	0.6152851E-02
0.2542740E-01	0.2466303E-01	0.2312399E-01	0.2159285E-01	0.2005652E-01	0.1853344E-01	0.1701165E-01
0.1548850E-01	0.1397126E-01	0.1245546E-01	0.1096392E-01	0.9474403E-02	0.7990302E-02	0.6516551E-02
0.5059352E-02	0.3600645E-02	0.2163134E-02	0.7679667E-03	-0.5891460E-03	-0.1884340E-02	-0.3126333E-02
-0.4331099E-02	-0.5511906E-02	-0.1242680E-01	-0.4824515E-02	-0.6683256E-02	-0.7841432E-02	-0.8977411E-02
0.5321247E-06	0.	0.7153172E-03	-0.1190092E-01	0.	0.	0.
0.	-0.3995907E-02	-0.2987392E-02	-0.4377571E-02	-0.4424434E-02	0.	-0.4420566E-02
-0.4348300E-02	-0.4046713E-02	-0.3598173E-02	-0.3002709E-02	-0.2428003E-02	-0.2170235E-02	-0.2343301E-02
-0.3080728E-02	-0.4855741E-02	-0.3758510E-02	-0.2367004E-01	0.2242332E-14	-0.2426705E-01	-0.3997536E-01
-0.5101740E-01	-0.5525360E-01	-0.5225788E-01	-0.4277095E-01	-0.2874716E-01	-0.1327274E-01	0.2406138E-03
-0.1496112E-01	-0.9118525E-01	0.8176003E-14	-0.9345026E-01	-0.1531230E-00	-0.1941793E-00	-0.2089525E-00
-0.1967629E-00	-0.1610105E-00	-0.1088088E-00	-0.5083783E-01	0.7644038E-03	0.4188336E-02	0.2504594E-01
0.3117887E-14	0.2567556E-01	0.4211281E-01	0.5362197E-01	0.5797871E-01	0.5477450E-01	0.4482111E-01
0.3016241E-01	0.1401409E-01	-0.6808179E-04	0.1480977E-01	0.9081253E-01	-0.1868438E-13	0.9307064E-01
0.1525658E-00	0.1934984E-00	0.2082321E-00	0.1960788E-00	0.1604285E-00	0.1083668E-00	0.5054809E-01
-0.9277294E-03	-0.1861360E-01	-0.3027321E-01	-0.1088006E-13	-0.3078591E-01	-0.4220716E-01	-0.5119201E-01
-0.5524799E-01	-0.5399674E-01	-0.4836271E-01	-0.3960220E-01	-0.2912075E-01	-0.1865465E-01	0.3203589E-01
0.5179694E-01	0.3023495E-14	0.5261818E-01	0.7134547E-01	0.8526597E-01	0.9043611E-01	0.8695255E-01
0.7709935E-01	0.6319163E-01	0.4708459E-01	0.3091130E-01	0.1846123E-01	0.2989190E-01	-0.2859439E-14
0.3039210E-01	0.4162205E-01	0.5048557E-01	0.5445461E-01	0.5314868E-01	0.4752205E-01	0.3886980E-01
0.2859745E-01	0.1839917E-01	-0.3215682E-01	-0.5195416E-01	-0.1413918E-13	-0.5277856E-01	-0.7157455E-01
-0.8558962E-01	-0.9080567E-01	-0.8728638E-01	-0.7734318E-01	-0.6334251E-01	-0.4717556E-01	-0.3098113E-01
0.4965505E-04	0.5015506E-04	0.5160027E-04	0.5160022E-04	-0.4315075E-04	-0.1651174E-04	-0.8278916E-02
-0.8213035E-02	0.2751961E-02	0.2726947E-02	0.8348237E-02	0.8277304E-02	-0.2831890E-02	-0.2804947E-02
-0.1901475E-01	-0.1802105E-01	-0.1069850E-01	-0.1011860E-01	0.1908844E-01	0.1811798E-01	0.1064495E-01
0.1001293E-01	-0.9782111E-05	-0.1659811E-04	0.1304730E-03	-0.3985421E-06	-0.3059015E-02	-0.4455131E-01
-0.1953736E-02	-0.7892021E-04	-0.4528084E-04	0.1098944E-03	0.1685255E-01	-0.9348464E-02	0.4859757E-01
0.3682223E-04	0.3513988E-03	-0.5648914E-04	0.2965907E-02	0.4461482E-01	0.1818863E-02	0.7783569E-04
0.4313316E-04	-0.1104907E-03	-0.1689419E-01	0.9397512E-02	-0.4862335E-01	-0.3727046E-04	-0.3503264E-03
0.5769070E-04	-0.4443960E-01	-0.5397171E-02	-0.5036606E-02	-0.6041731E-04	0.2361878E-03	-0.4619817E-04
-0.1408489E-01	0.4255698E-01	-0.3319380E-02	0.4453618E-04	0.1329182E-03	-0.1166603E-03	0.4459046E-01
0.5358738E-02	0.5035520E-02	0.6047793E-04	-0.2373206E-03	0.4601749E-04	0.1399635E-01	-0.4260042E-01
0.3299519E-02	-0.4520241E-04	-0.1329177E-03	0.1152764E-03			

SA-5 RUN #1 MODE 17 XN = 1.791688

0.6992159E-01	0.6775538E-01	0.6342913E-01	0.5911087E-01	0.5481147E-01	0.5054554E-01	0.4630872E-01
0.4209504E-01	0.3789471E-01	0.3373367E-01	0.2961699E-01	0.2555995E-01	0.2154541E-01	0.1755636E-01
0.1361959E-01	0.9729246E-02	0.5905708E-02	0.2169843E-02	-0.1320848E-02	-0.4576236E-02	-0.7649639E-02
-0.1057495E-01	-0.1341933E-01	-0.2862535E-01	-0.1177545E-01	-0.1621605E-01	-0.1897843E-01	-0.2170802E-01
-0.	-0.	0.1702253E-02	-0.2889909E-01	-0.	-0.	-0.
-0.	-0.9680014E-02	-0.3410553E-02	-0.1204913E-01	-0.1107845E-01	-0.	-0.9991764E-02
-0.8810093E-02	-0.7988944E-02	-0.8309058E-02	-0.8289129E-02	-0.6346224E-02	-0.3833372E-02	-0.3146822E-02
-0.5034270E-02	-0.1124324E-01	0.3953727E-02	0.1708146E-02	-0.	0.1644841E-02	-0.1962734E-03
-0.1559863E-02	-0.2526974E-02	-0.3249956E-02	-0.3585727E-02	-0.3508337E-02	-0.2652932E-02	-0.2787125E-03
0.1576346E-01	-0.2295480E-02	-0.	-0.2869259E-02	-0.1747422E-01	-0.2823225E-01	-0.3325218E-01
-0.3262209E-01	-0.2669940E-01	-0.1636006E-01	-0.2706343E-02	0.1254986E-01	-0.3955053E-02	-0.1762266E-02
-0.	-0.1678369E-02	0.1122484E-03	0.1441766E-02	0.2393168E-02	0.3113723E-02	0.3460368E-02
0.3398074E-02	0.2550732E-02	0.1736307E-03	-0.1574761E-01	0.2305913E-02	-0.	0.2866457E-02
0.1746957E-01	0.2822948E-01	0.3322739E-01	0.3257889E-01	0.2663982E-01	0.1630629E-01	0.2692150E-02
-0.1248916E-01	-0.8040459E-02	0.3004302E-02	0.	0.3390352E-02	0.1303363E-01	0.2132548E-01
0.2647121E-01	0.2760157E-01	0.2425793E-01	0.1679707E-01	0.6475057E-02	-0.4546913E-02	0.1332612E-01
-0.1342899E-02	0.	-0.1819417E-02	-0.1393540E-01	-0.2326363E-01	-0.2830859E-01	-0.2906998E-01
-0.2551721E-01	-0.1822783E-01	-0.7791168E-02	0.4970575E-02	0.7980291E-02	-0.3201417E-02	0.
-0.3590582E-02	-0.1334280E-01	-0.2169534E-01	-0.2684466E-01	-0.2793410E-01	-0.2451040E-01	-0.1692510E-01
-0.6431471E-02	0.4797987E-02	-0.1323929E-01	0.1516548E-02	0.	0.1994629E-02	0.1416611E-01
0.2352418E-01	0.2856268E-01	0.2926182E-01	0.2560095E-01	0.1818128E-01	0.7615160E-02	-0.5265578E-02
-0.2130557E-00	-0.2067899E-00	-0.1942647E-00	-0.1817530E-00	-0.1692712E-00	-0.1568229E-00	-0.1444235E-00
-0.1320554E-00	-0.1197143E-00	-0.1074436E-00	-0.9523872E-01	-0.8316845E-01	-0.7116811E-01	-0.5924356E-01
-0.4741223E-01	-0.3569701E-01	-0.2411895E-01	-0.1274719E-01	-0.1930926E-02	0.8328928E-02	0.1814585E-01
0.2758790E-01	0.3681761E-01	0.9727407E-01	0.3148400E-01	0.4592630E-01	0.5491958E-01	0.6379899E-01
-0.6140343E-04	0.	-0.4532651E-02	0.8585973E-01	0.	0.	0.
0.	0.2731181E-01	0.2155087E-01	0.3115922E-01	0.3317367E-01	0.	0.3462900E-01
0.3595646E-01	0.3669289E-01	0.3540395E-01	0.3173216E-01	0.2580915E-01	0.2015821E-01	0.1688507E-01
0.1775968E-01	0.2894129E-01	-0.2319310E-01	-0.1032057E-00	0.1071704E-14	-0.1055027E-00	-0.1667770E-00
-0.2066364E-00	-0.2182965E-00	-0.2034097E-00	-0.1666900E-00	-0.1149645E-00	-0.5732569E-01	-0.4814816E-02
-0.3601424E-02	0.8628048E-02	0.3203799E-14	0.9015944E-02	0.1890426E-01	0.2591651E-01	0.2885080E-01
0.2776080E-01	0.2343409E-01	0.1724360E-01	0.1038147E-01	0.3938695E-02	0.1585901E-01	0.1006511E-00
0.1268549E-14	0.1031184E-00	0.1684465E-00	0.2116091E-00	0.2253873E-00	0.2113751E-00	0.1744142E-00
0.1215506E-00	0.6220893E-01	0.7926621E-02	-0.4735775E-03	-0.1703104E-02	-0.7587897E-14	-0.1753878E-02
-0.2848178E-02	-0.3538882E-02	-0.3554886E-02	-0.2881496E-02	-0.1764368E-02	-0.7597978E-03	0.7194494E-04
0.1063298E-02	0.2327310E-01	0.3829961E-01	-0.4420309E-14	0.3885128E-01	0.5220104E-01	0.6255218E-01
0.6742766E-01	0.6587420E-01	0.5857117E-01	0.4694707E-01	0.3349475E-01	0.2115155E-01	0.1543304E-01
0.2948684E-01	0.1255416E-14	0.3004423E-01	0.4306057E-01	0.5329324E-01	0.5859446E-01	0.5845552E-01
0.5337966E-01	0.4434302E-01	0.3283715E-01	0.2093953E-01	-0.3318529E-01	-0.4899996E-01	-0.1203539E-14
-0.4960269E-01	-0.6393413E-01	-0.7494381E-01	-0.7967667E-01	-0.7692562E-01	-0.6737646E-01	-0.5272252E-01
-0.3592167E-01	-0.2042897E-01	-0.2521245E-01	-0.3952338E-01	-0.5758567E-14	-0.4009732E-01	-0.5346228E-01
-0.6363777E-01	-0.6817825E-01	-0.6655745E-01	-0.5943046E-01	-0.4797342E-01	-0.3393480E-01	-0.1968783E-01
0.9012075E-05	0.8436286E-05	0.6519081E-05	0.6519071E-05	0.2445931E-04	0.2306371E-04	0.8658128E-03
0.7891711E-03	0.8921922E-02	0.8926727E-02	-0.7421063E-03	-0.6328306E-03	-0.9097747E-02	-0.9110191E-02
-0.1491461E-01	-0.1460012E-01	0.1658374E-01	0.1597900E-01	0.1457290E-01	0.1403755E-01	-0.1625585E-01
-0.1543358E-01	0.8072830E-05	0.1399287E-03	0.4862061E-04	0.1310766E-04	0.1586872E-01	-0.1808003E-01
0.4008384E-01	0.1992551E-04	0.2825000E-03	-0.1473797E-04	0.6897829E-02	0.3337387E-01	0.1168264E-01
0.6055160E-04	0.3513349E-04	-0.6761163E-04	-0.1623225E-01	0.1677138E-01	-0.3803125E-01	0.7849784E-05
-0.2792900E-03	0.2113262E-04	-0.8532865E-02	-0.3491834E-01	-0.1049151E-01	-0.3397638E-04	-0.5243938E-04
0.8257223E-04	-0.2215879E-01	0.3445390E-01	-0.4698615E-02	0.2892921E-04	0.1739106E-03	-0.2271367E-04
0.3467012E-01	0.1730797E-01	0.2904768E-02	0.9990970E-04	-0.1418829E-03	0.9713783E-04	0.2241511E-01
-0.3350434E-01	0.4927243E-02	-0.4296790E-04	-0.1781484E-03	0.4592655E-04	-0.3366620E-01	-0.1627416E-01
-0.2610020E-02	-0.9648873E-04	0.1275227E-03	-0.6171357E-04			

SA-5 RUN #1 MODE 18 XN = 1 049099

0.3681184E-00	0.3573039E-00	0.3356933E-00	0.3141307E-00	0.2926565E-00	0.2713002E-00	0.2500812E-00
0.2289498E-00	0.2079059E-00	0.1870321E-00	0.1664469E-00	0.1462190E-00	0.1261899E-00	0.1064000E-00
0.8689368E-01	0.6772048E-01	0.4895747E-01	0.3083683E-01	0.1435798E-01	-0.4579859E-03	-0.1394364E-01
-0.2630776E-01	-0.3803432E-01	-0.1312354E-00	-0.3128062E-01	-0.4940475E-01	-0.6041969E-01	-0.7108909E-01
-0.	-0.	0.3222577E-02	-0.9711850E-01	-0.	-0.	-0.
-0.	0.5655299E-02	0.6977055E-02	0.6951174E-02	0.8017290E-02	-0.	0.9197757E-02
0.1096855E-01	0.1458331E-01	0.1826319E-01	0.2209664E-01	0.2473809E-01	0.2445859E-01	0.2111349E-01
0.1428067E-01	0.2553494E-02	0.1780498E-02	-0.1828951E-02	-0.	-0.1933804E-02	-0.4595921E-02
-0.6097401E-02	-0.6126853E-02	-0.4826257E-02	-0.2409608E-02	0.8117984E-03	0.4589079E-02	0.8719363E-02
-0.6973106E-03	0.7259347E-03	-0.	0.7683872E-03	0.1799639E-02	0.2359587E-02	0.2334698E-02
0.1780413E-02	0.7993293E-03	-0.4754168E-03	-0.1938171E-02	-0.3514341E-02	-0.1613304E-02	0.1640087E-02
-0.	0.1721263E-02	0.4122543E-02	0.5469548E-02	0.5491451E-02	0.4324228E-02	0.2163116E-02
-0.7128039E-03	-0.4088016E-02	-0.7787024E-02	0.4067987E-03	-0.6158057E-03	-0.	-0.6438235E-03
-0.1380814E-02	-0.1755114E-02	-0.1685487E-02	-0.1248737E-02	-0.5150972E-03	0.4118879E-03	0.1461939E-02
0.2594480E-02	0.1027698E-02	-0.1700647E-02	0.	-0.1781586E-02	-0.3882589E-02	-0.5203093E-02
-0.5413516E-02	-0.4550322E-02	-0.2677093E-02	0.3994279E-05	0.3306628E-02	0.7029115E-02	0.5093861E-03
0.8258311E-03	0.	-0.8644309E-03	-0.1888423E-02	-0.2519504E-02	-0.2613163E-02	-0.2182527E-02
-0.1273175E-02	0.1074700E-04	0.1572269E-02	0.3312975E-02	-0.1304860E-02	0.1578632E-02	0.
0.1663849E-02	0.3902002E-02	0.5346117E-02	0.5647976E-02	0.4835128E-02	0.2967064E-02	0.2455839E-03
-0.3135157E-02	-0.6959132E-02	-0.8354852E-03	0.5412337E-03	0.	0.5811996E-03	0.1646794E-02
0.2339509E-02	0.2488792E-02	0.2106513E-02	0.1234620E-02	-0.2874494E-04	-0.1581529E-02	-0.3322707E-02
0.1252819E-01	0.1215599E-01	0.1141634E-01	0.1067631E-01	0.9941471E-02	0.9208479E-02	0.8481052E-02
0.7757653E-02	0.7037267E-02	0.6324702E-02	0.5614543E-02	0.4921149E-02	0.4235835E-02	0.3556728E-02
0.2886471E-02	0.2230682E-02	0.1587455E-02	0.9591384E-03	0.3932057E-03	-0.1173269E-03	-0.5851050E-03
-0.1014034E-02	-0.1421553E-02	-0.5764133E-02	-0.1188329E-02	-0.1815354E-02	-0.2198391E-02	-0.2572384E-02
-0.1033273E-05	0.	0.1040825E-03	-0.3415759E-02	0.	0.	0.
0.	0.9844334E-03	0.4105564E-03	0.1343903E-02	0.1366364E-02	0.	0.1394159E-02
0.1437798E-02	0.1523348E-02	0.1590257E-02	0.1611601E-02	0.1525022E-02	0.1318686E-02	0.1031007E-02
0.6783638E-03	0.2240593E-03	0.2291065E-02	0.9905460E-02	0.1076766E-17	0.1010113E-01	0.1553987E-01
0.1837408E-01	0.1803473E-01	0.1496943E-01	0.1006952E-01	0.4509527E-02	-0.2730795E-03	-0.2805449E-02
0.5938405E-02	0.2604510E-01	-0.4016239E-15	0.2656011E-01	0.4082370E-01	0.4807578E-01	0.4682642E-01
0.3832639E-01	0.2502730E-01	0.1014509E-01	-0.2395880E-02	-0.8646657E-02	-0.2869479E-02	-0.1070255E-01
-0.1352399E-15	-0.1090036E-01	-0.1645246E-01	-0.1927272E-01	-0.1878381E-01	-0.1546512E-01	-0.1025195E-01
-0.4374965E-02	0.6635533E-03	0.3341544E-02	-0.6400022E-02	-0.2656524E-01	0.9111111E-15	-0.2707952E-01
-0.4134747E-01	-0.4853210E-01	-0.4714782E-01	-0.3846238E-01	-0.2495981E-01	-0.9880301E-02	0.2823745E-02
0.9188264E-02	0.1312476E-02	0.7984194E-03	0.5290864E-15	0.1018553E-02	0.4223223E-02	0.9351338E-02
0.1463462E-01	0.1853834E-01	0.2007314E-01	0.1875862E-01	0.1464190E-01	0.8459679E-02	-0.2317601E-02
-0.1439520E-03	-0.1250374E-15	-0.5506706E-03	-0.6050961E-02	-0.1568677E-01	-0.2602590E-01	-0.3398090E-01
-0.3749379E-01	-0.3548892E-01	-0.2790977E-01	-0.1608994E-01	0.3925022E-04	0.2789125E-02	0.1134916E-15
0.2742054E-02	0.2856896E-02	0.1171932E-02	-0.1609641E-02	-0.4569247E-02	-0.6923624E-02	-0.8035128E-02
-0.7460451E-02	-0.5163270E-02	0.2070126E-03	-0.3920339E-02	0.6571020E-15	-0.3671548E-02	-0.1191201E-02
0.5328344E-02	0.1349534E-01	0.2080545E-01	0.2537666E-01	0.2594747E-01	0.2195513E-01	0.1396967E-01
-0.9588322E-04	-0.9520820E-04	-0.9298863E-04	-0.9298864E-04	0.5444112E-04	0.2255986E-04	-0.1085597E-01
-0.1081388E-01	0.4696069E-02	0.4677616E-02	0.8956016E-02	0.8917471E-02	-0.2750114E-02	-0.2739289E-02
-0.1031854E-01	-0.7903170E-02	-0.4784337E-02	-0.3692314E-02	0.1033378E-01	0.7935033E-02	0.4739490E-02
0.3692356E-02	0.1495740E-04	-0.3572586E-05	0.9891787E-04	0.3144548E-05	-0.9899137E-02	-0.1627240E-02
-0.4865758E-03	0.7511626E-05	-0.2039797E-04	0.1441636E-03	0.5523945E-02	0.2906936E-03	0.9820677E-03
0.3983779E-05	0.8186452E-04	-0.7358010E-05	0.8208130E-02	0.6630179E-03	0.4926803E-03	0.2149503E-05
0.1562048E-04	-0.1122802E-03	-0.3759271E-02	-0.1539801E-03	-0.3129466E-05	-0.5533193E-06	-0.7547984E-04
-0.2357120E-04	-0.1876690E-02	0.2725927E-03	-0.3762166E-02	0.1443416E-04	0.8982998E-04	0.1751237E-04
0.1568035E-02	0.1281550E-02	-0.6030958E-04	0.6070051E-04	0.3969875E-05	0.6136845E-05	0.1139058E-02
0.1847484E-03	0.3817432E-02	0.1005995E-04	-0.1012542E-03	0.3968176E-05	-0.8235746E-03	-0.1186826E-02
0.6636178E-04	-0.8525609E-04	0.8007192E-05	-0.1304037E-04			

SA-5 RUN #1 MODE 19 XN = 5868233

0.3943076E-01	0.3839793E-01	0.3632484E-01	0.3425492E-01	0.3219320E-01	0.3015322E-01	0.2813577E-01
0.2613769E-01	0.2415005E-01	0.2220371E-01	0.2030955E-01	0.1849076E-01	0.1673639E-01	0.1501724E-01
0.1336858E-01	0.1179267E-01	0.1031535E-01	0.8969148E-02	0.8014139E-02	0.7442280E-02	0.7174192E-02
0.7170403E-02	0.7314295E-02	0.1087476E-00	0.7220894E-02	0.7552174E-02	0.7863837E-02	0.8265209E-02
0.	0.	-0.2111090E-03	0.1080445E-01	0.	0.	0.
0.	-0.1040585E-00	-0.9863076E-01	-0.1160977E-00	-0.1271375E-00	0.	-0.1384810E-00
-0.1535506E-00	-0.1769245E-00	-0.1895710E-00	-0.1872168E-00	-0.1625579E-00	-0.1245119E-00	-0.8805418E-01
-0.6698360E-01	-0.8004730E-01	-0.7120921E-01	-0.4561825E-01	0.	-0.4444970E-01	-0.1839649E-01
0.5775381E-02	0.2298068E-01	0.3207050E-01	0.3216007E-01	0.2289760E-01	0.3151771E-02	-0.2623210E-01
0.3071381E-01	0.1991050E-01	0.	0.1939909E-01	0.8210321E-02	-0.2467727E-02	-0.1037648E-01
-0.1476088E-01	-0.1502684E-01	-0.1088961E-01	-0.1850067E-02	0.1159603E-01	0.7169841E-01	0.4615252E-01
0.	0.4501454E-01	0.1890045E-01	-0.5415293E-02	-0.2281571E-01	-0.3212132E-01	-0.3240827E-01
-0.2328927E-01	-0.3620321E-02	0.2573415E-01	-0.3169475E-01	-0.2109380E-01	0.	-0.2059868E-01
-0.9411144E-02	0.1416297E-02	0.9551101E-02	0.1425971E-01	0.1486977E-01	0.1103191E-01	0.2201181E-02
-0.1110790E-01	-0.7183333E-01	-0.3972464E-01	-0.	-0.3841998E-01	-0.8216788E-02	0.1740705E-01
0.3294100E-01	0.3808184E-01	0.3325938E-01	0.1963528E-01	-0.2940566E-02	-0.3348707E-01	-0.2939317E-01
-0.1748734E-01	-0.	-0.1700299E-01	-0.5273296E-02	0.5006657E-02	0.1178131E-01	0.1460023E-01
0.1345834E-01	0.8583814E-02	-0.2471591E-03	-0.1261782E-01	0.7093715E-01	0.3919303E-01	-0.
0.3794644E-01	0.8187864E-02	-0.1694404E-01	-0.3210477E-01	-0.3704289E-01	-0.3223121E-01	-0.1876813E-01
0.3517097E-02	0.3369618E-01	0.2815587E-01	0.1663190E-01	-0.	0.1616798E-01	0.5005722E-02
-0.4879252E-02	-0.1121785E-01	-0.1376527E-01	-0.1255646E-01	-0.7767288E-02	0.7967013E-03	0.1282888E-01
-0.5989775E-04	-0.6786571E-04	-0.1486619E-03	-0.1967171E-03	-0.2965790E-03	-0.3243733E-03	-0.3768278E-03
-0.4774196E-03	-0.5335330E-03	-0.6436700E-03	-0.6488551E-03	-0.7193297E-03	-0.7951890E-03	-0.8792269E-03
-0.8912840E-03	-0.1010230E-02	-0.1076679E-02	-0.1014311E-02	-0.1082413E-02	-0.1120827E-02	-0.1135068E-02
-0.1165348E-02	-0.1183256E-02	-0.1058061E-01	-0.1148099E-02	-0.1218168E-02	-0.1262540E-02	-0.1238087E-02
0.1050969E-04	-0.	0.5460904E-04	-0.8630278E-03	-0.	-0.	-0.
-0.	0.7200199E-02	0.1777768E-02	0.1007405E-01	0.1019695E-01	-0.	0.1029267E-01
0.1036781E-01	0.1029320E-01	0.9886207E-02	0.8950942E-02	0.7346402E-02	0.5447584E-02	0.3640011E-02
0.2227586E-02	0.1862669E-02	0.1899554E-01	-0.1114774E-01	0.9966440E-15	-0.1189066E-01	-0.3303737E-01
-0.4298630E-01	-0.4038145E-01	-0.2905343E-01	-0.1358635E-01	0.1829248E-02	0.1377241E-01	0.1889735E-01
0.4546923E-01	-0.1980849E-01	0.1000220E-13	-0.2145852E-01	-0.6711955E-01	-0.8826266E-01	-0.8213258E-01
-0.5781990E-01	-0.2544942E-01	0.6241249E-02	0.3080842E-01	0.4213143E-01	-0.1905933E-01	0.1125987E-01
0.4054763E-14	0.1205619E-01	0.3328465E-01	0.4323154E-01	0.4057555E-01	0.2917621E-01	0.1357468E-01
-0.2024543E-02	-0.1409715E-01	-0.1932758E-01	-0.4574753E-01	0.1984049E-01	-0.2527135E-13	0.2150536E-01
0.6746404E-01	0.8871577E-01	0.8259856E-01	0.5810593E-01	0.2552660E-01	-0.6436781E-02	-0.3120374E-01
-0.4261997E-01	-0.2434633E-01	-0.3606819E-02	-0.1571713E-13	-0.2006220E-02	0.2982281E-01	0.6215414E-01
0.8356151E-01	0.8943450E-01	0.7946906E-01	0.5713575E-01	0.2788661E-01	-0.8293882E-03	0.6380574E-01
0.9354580E-02	0.3587906E-14	0.4978281E-02	-0.7870364E-01	-0.1635742E-00	-0.2201005E-00	-0.2356877E-00
-0.2096906E-00	-0.1509897E-00	-0.7426309E-01	0.9280537E-03	0.2695395E-01	0.5782118E-02	-0.3618279E-14
0.4009572E-02	-0.2949555E-01	-0.6399084E-01	-0.8744991E-01	-0.9456572E-01	-0.8486708E-01	-0.6181794E-01
-0.3120617E-01	-0.8427016E-03	-0.6607561E-01	-0.1086141E-01	-0.1854631E-13	-0.6376304E-02	0.7893809E-01
0.1658621E-00	0.2241130E-00	0.2406043E-00	0.2145287E-00	0.1548760E-00	0.7664793E-01	-0.2056991E-03
-0.6423822E-03	-0.6377996E-03	-0.6221932E-03	-0.6221931E-03	0.3625895E-03	0.1603385E-03	-0.4283263E-01
-0.4259278E-01	0.1821065E-01	0.1810426E-01	0.4387889E-01	0.4356205E-01	-0.1894673E-01	-0.1880456E-01
-0.1371555E-01	-0.2466105E-01	-0.5684202E-02	-0.1020765E-01	0.1371615E-01	0.2480427E-01	0.5498760E-02
0.1026351E-01	0.1030979E-03	0.3730605E-05	0.3986928E-03	-0.2767205E-05	-0.4070984E-01	-0.8024870E-01
-0.8497590E-03	0.1177024E-03	0.1315176E-03	0.7512564E-03	0.9686861E-02	-0.3556647E-02	0.9424689E-01
-0.7670168E-04	0.5095990E-03	0.1132967E-03	0.4160793E-01	0.8096801E-01	0.5320491E-03	-0.1249273E-03
-0.1316437E-03	-0.7652868E-03	-0.1023264E-01	0.3804955E-02	-0.9492180E-01	0.7231737E-04	-0.5136431E-03
-0.9966785E-04	-0.1036558E-00	-0.3428120E-02	-0.1691334E-03	-0.5890194E-04	0.1490596E-03	-0.1251408E-03
0.1171795E-01	0.8982041E-01	0.3632075E-02	-0.4506178E-03	-0.2617057E-04	0.7323061E-03	0.1040057E-00
0.3045615E-02	0.4324145E-03	0.4762645E-04	-0.1450241E-03	0.1108932E-03	-0.1205384E-01	-0.8995739E-01
-0.3352800E-02	0.4618784E-03	0.2003767E-04	-0.7330018E-03			

SA-5 RUN #1 MODE 20 XN = .5840905

0.3123031E-01	0.3075032E-01	0.2977123E-01	0.2876602E-01	0.2773750E-01	0.2666920E-01	0.2557481E-01
0.2447090E-01	0.2334045E-01	0.2219862E-01	0.2104767E-01	0.1987773E-01	0.1873227E-01	0.1759199E-01
0.1645121E-01	0.1532593E-01	0.1422556E-01	0.1314734E-01	0.1220663E-01	0.1140124E-01	0.1072905E-01
0.1019554E-01	0.9743138E-02	0.1044880E-00	0.9997893E-02	0.9350992E-02	0.9025605E-02	0.8783941E-02
0.	0.	-0.1953848E-03	0.9575073E-02	0.	0.	0.
0.	-0.1037612E-00	-0.1017578E-00	-0.1134192E-00	-0.1247758E-00	0.	-0.1360392E-00
-0.1498326E-00	-0.1680048E-00	-0.1756404E-00	-0.1735187E-00	-0.1591528E-00	-0.1337335E-00	-0.1028638E-00
-0.7405716E-01	-0.7954253E-01	-0.7511881E-01	-0.4533464E-01	0.	-0.4418968E-01	-0.1686655E-01
0.7119862E-02	0.2413355E-01	0.3288347E-01	0.3180996E-01	0.2144250E-01	0.1982972E-02	-0.2636230E-01
0.2423230E-01	0.1513216E-01	0.	0.1476146E-01	0.6048001E-02	-0.2034543E-02	-0.8318373E-02
-0.1159815E-01	-0.1127940E-01	-0.7245987E-02	0.4787043E-03	0.1184348E-01	0.7547985E-01	0.4586850E-01
0.	0.4474603E-01	0.1749087E-01	-0.6539578E-02	-0.2373260E-01	-0.3274056E-01	-0.3198034E-01
-0.2189674E-01	-0.2623027E-02	0.2561844E-01	-0.2510861E-01	-0.1613250E-01	0.	-0.1573860E-01
-0.6949886E-02	0.1352858E-02	0.7984544E-02	0.1173675E-01	0.1187639E-01	0.8164035E-02	0.5385551E-03
-0.1093639E-01	-0.6945407E-01	-0.3462553E-01	-0.	-0.3342355E-01	-0.3879452E-02	0.1896303E-01
0.3171899E-01	0.3469779E-01	0.2844288E-01	0.1467001E-01	-0.6074596E-02	-0.3395147E-01	-0.3702135E-01
-0.2077889E-01	-0.	-0.2019657E-01	-0.5713302E-02	0.6258933E-02	0.1400168E-01	0.1735475E-01
0.1575595E-01	0.9810687E-02	-0.1788597E-03	-0.1387917E-01	0.6807776E-01	0.3361709E-01	-0.
0.3246435E-01	0.3323243E-02	-0.1910549E-01	-0.3149397E-01	-0.3417549E-01	-0.2775925E-01	-0.1397305E-01
0.6585259E-02	0.3411929E-01	0.3568624E-01	0.1978414E-01	-0.	0.1923022E-01	0.5240513E-02
-0.6472208E-02	-0.1383382E-01	-0.1684891E-01	-0.1504967E-01	-0.9038566E-02	0.7682092E-03	0.1413666E-01
0.1787535E-01	0.1736305E-01	0.1625738E-01	0.1519261E-01	0.1408447E-01	0.1303274E-01	0.1197153E-01
0.1089104E-01	0.9821265E-02	0.8745018E-02	0.7779705E-02	0.6776151E-02	0.5766474E-02	0.4801576E-02
0.3884209E-02	0.2917328E-02	0.2016699E-02	0.1299659E-02	0.5685982E-03	-0.1330298E-04	-0.4521716E-03
-0.8235112E-03	-0.1140487E-02	0.7113630E-03	-0.9298182E-03	-0.1458995E-02	-0.1734206E-02	-0.1921297E-02
0.7319369E-06	-0.	0.3107259E-04	-0.1599647E-02	-0.	-0.	-0.
-0.	-0.9172011E-02	-0.8965789E-02	-0.1329492E-01	-0.1679346E-01	-0.	-0.1983027E-01
-0.2349928E-01	-0.2894675E-01	-0.3223638E-01	-0.3281119E-01	-0.2887123E-01	-0.2140956E-01	-0.1305022E-01
-0.5593768E-02	-0.3769984E-02	0.1746557E-01	-0.1984730E-02	0.1237643E-15	-0.2534173E-02	-0.1744604E-01
-0.2642372E-01	-0.2762102E-01	-0.2159142E-01	-0.1088699E-01	0.1151279E-02	0.1122068E-01	0.1649585E-01
0.5327446E-01	-0.9247534E-02	0.8815038E-14	-0.1104372E-01	-0.5847711E-01	-0.8653678E-01	-0.8902565E-01
-0.6928956E-01	-0.3486913E-01	0.2706402E-02	0.3174407E-01	0.4283876E-01	-0.1763007E-01	0.3312505E-02
0.3567543E-14	0.3943151E-02	0.2001531E-01	0.2976898E-01	0.3126599E-01	0.2510827E-01	0.1384287E-01
0.9395050E-03	-0.1002636E-01	-0.1609645E-01	-0.5449202E-01	0.9100902E-02	-0.2219276E-13	0.1093665E-01
0.5926293E-01	0.8791594E-01	0.9069093E-01	0.7087025E-01	0.3620418E-01	-0.1792550E-02	-0.3126629E-01
-0.4270856E-01	-0.3242779E-01	-0.3889670E-02	-0.1410669E-13	-0.1633664E-02	0.4295694E-01	0.8978419E-01
0.1232576E-00	0.1354935E-00	0.1236278E-00	0.9167690E-01	0.4848601E-01	0.6622092E-02	0.6472947E-01
0.1617589E-01	0.2978749E-14	0.1228474E-01	-0.6257762E-01	-0.1407363E-00	-0.1969883E-00	-0.2176712E-00
-0.1984470E-00	-0.1452778E-00	-0.7236498E-01	0.9597068E-04	0.3335213E-01	0.3586899E-02	-0.3051093E-14
0.1122483E-02	-0.4589817E-01	-0.9523875E-01	-0.1306548E-00	-0.1438073E-00	-0.1318008E-00	-0.9856890E-01
-0.5316613E-01	-0.8569172E-02	-0.6792227E-01	-0.1853871E-01	-0.1622027E-13	-0.1453313E-01	0.6228333E-01
0.1427491E-00	0.2009455E-00	0.2228626E-00	0.2040313E-00	0.1503048E-00	0.7595139E-01	0.1519835E-02
-0.8991191E-03	-0.8886455E-03	-0.8540474E-03	-0.8540474E-03	0.4352385E-03	0.1852474E-03	-0.4514577E-01
-0.4454678E-01	0.1179217E-01	0.1160832E-01	0.4688009E-01	0.4608841E-01	-0.1295026E-01	-0.1269564E-01
-0.1149352E-01	-0.2102294E-01	-0.7221885E-02	-0.1190389E-01	0.1154120E-01	0.2128841E-01	0.6943205E-02
0.1196091E-01	0.1304924E-03	-0.3252454E-04	0.3573259E-03	-0.1207567E-06	-0.3852194E-01	-0.7642769E-01
-0.5040959E-03	-0.1105393E-05	0.7956775E-04	0.7903095E-03	0.8839291E-03	-0.1322909E-01	0.9439438E-01
-0.9949079E-04	0.6077233E-03	0.1659257E-03	0.3966820E-01	0.7694199E-01	0.6232508E-03	-0.1230363E-05
-0.7990530E-04	-0.8112756E-03	-0.1828622E-02	0.1298701E-01	-0.9475583E-01	0.1006214E-03	-0.6129200E-03
-0.1427655E-03	-0.9823132E-01	-0.6286444E-02	0.2483324E-04	0.3973120E-04	0.2314994E-03	0.1230545E-03
0.2882153E-02	0.7426182E-01	0.4845099E-02	-0.5712776E-03	0.6893979E-05	0.3680652E-03	0.9886061E-01
0.6064668E-02	0.3082246E-03	-0.5756521E-04	-0.2256805E-03	-0.1325838E-03	-0.3318105E-02	-0.7413313E-01
-0.4474181E-02	0.5877218E-03	-0.1708410E-04	-0.3613229E-03			

SA-5 RUN #1 MODE 21 XN = 3590616

0.2634145E-00	0.2538547E-00	0.2347484E-00	0.2157167E-00	0.1968719E-00	0.1782975E-00	0.1600265E-00
0.1419739E-00	0.1240766E-00	0.1065546E-00	0.8956755E-01	0.7323907E-01	0.5737302E-01	0.4189756E-01
0.2697224E-01	0.1265737E-01	-0.8686814E-03	-0.1327320E-01	-0.2261523E-01	-0.2895517E-01	-0.3291968E-01
-0.3488045E-01	-0.3573015E-01	-0.4128877E-01	-0.3531336E-01	-0.3593730E-01	-0.3557560E-01	-0.3463275E-01
-0.	-0.	0.3794512E-03	-0.3034314E-01	-0.	-0.	-0.
-0.	0.5138040E-01	0.6649063E-01	0.3768040E-01	0.3213499E-01	-0.	0.2519463E-01
0.1273878E-01	-0.1882498E-01	-0.5599031E-01	-0.9560403E-01	-0.1189493E-00	-0.1095052E-00	-0.7142687E-01
-0.3418378E-02	0.1067677E-00	0.5905166E-01	0.4217605E-01	-0.	0.4140112E-01	0.2297276E-01
0.3669688E-02	-0.1267152E-01	-0.2256590E-01	-0.2424631E-01	-0.1715459E-01	-0.1827002E-02	0.2020086E-01
-0.2490767E-01	-0.1917853E-01	-0.	-0.1888296E-01	-0.1169660E-01	-0.3295927E-02	0.4533089E-02
0.9892332E-02	0.1152162E-01	0.8891697E-02	0.2145019E-02	-0.7912803E-02	-0.5919564E-01	-0.4242326E-01
-0.	-0.4153388E-01	-0.2319109E-01	-0.3871747E-02	0.1255252E-01	0.2256995E-01	0.2436237E-01
0.1734880E-01	0.2041101E-02	-0.2004432E-01	0.2522038E-01	0.1957278E-01	-0.	0.1923904E-01
0.1212678E-01	0.3665461E-02	-0.4416253E-02	-0.1000562E-01	-0.1184350E-01	-0.9317096E-02	-0.2533250E-02
0.7691603E-02	0.5705999E-01	0.3690646E-01	0.	0.3607454E-01	0.1639312E-01	-0.1974631E-02
-0.1568049E-01	-0.2247883E-01	-0.2176673E-01	-0.1370808E-01	0.9188956E-03	0.2089643E-01	0.2425893E-01
0.1645214E-01	0.	0.1608793E-01	0.8140647E-02	0.2406293E-03	-0.5983844E-02	-0.9507611E-02
-0.9742093E-02	-0.6603783E-02	-0.3890764E-03	0.8310331E-02	-0.5700212E-01	-0.3687760E-01	0.
-0.3601915E-01	-0.1636952E-01	0.1998432E-02	0.1570870E-01	0.2249399E-01	0.2173124E-01	0.1364331E-01
-0.9795101E-03	-0.2091559E-01	-0.2415462E-01	-0.1631431E-01	0.	-0.1594931E-01	-0.7941706E-02
-0.1740846E-03	0.6007762E-02	0.9454992E-02	0.9593845E-02	0.6427027E-02	0.2318835E-03	-0.8371225E-02
-0.1753359E-02	-0.1671720E-02	-0.1568489E-02	-0.1434292E-02	-0.1343710E-02	-0.1201974E-02	-0.1080839E-02
-0.9896259E-03	-0.8789217E-03	-0.8032857E-03	-0.6423534E-03	-0.5461387E-03	-0.4627095E-03	-0.3737439E-03
-0.2482793E-03	-0.2031626E-03	-0.1269984E-03	0.5068911E-04	0.9346641E-04	0.1326919E-03	0.1822015E-03
0.2016098E-03	0.2194566E-03	-0.2733177E-03	0.2333204E-03	0.2131104E-03	0.2046773E-03	0.2449749E-03
0.1872798E-04	0.	-0.3804902E-05	0.2298574E-03	0.	0.	0.
0.	0.3837761E-03	0.2606410E-03	0.5315502E-03	0.6052520E-03	0.	0.6706546E-03
0.7466800E-03	0.8289596E-03	0.8038826E-03	0.6307603E-03	0.3106894E-03	0.8863163E-06	-0.1938460E-03
-0.1882907E-03	-0.2524878E-03	-0.3192308E-01	-0.3896414E-01	-0.1773934E-14	-0.3879776E-01	-0.3821072E-01
-0.2901711E-01	-0.1331650E-01	0.3956697E-02	0.1784378E-01	0.2394100E-01	0.1855688E-01	0.4849235E-03
-0.7837409E-01	-0.9523313E-01	-0.1306829E-13	-0.9481412E-01	-0.9258598E-01	-0.6893656E-01	-0.2934955E-01
0.1347767E-01	0.4717411E-01	0.6114028E-01	0.4680239E-01	0.1945712E-02	0.3227696E-01	0.3853913E-01
-0.5559260E-14	0.3838096E-01	0.3720959E-01	0.2766763E-01	0.1193545E-01	-0.5071407E-02	-0.1855982E-01
-0.2422661E-01	-0.1846228E-01	-0.2013663E-03	0.7881849E-01	0.9516396E-01	0.3280243E-13	0.9473393E-01
0.9215897E-01	0.6828271E-01	0.2871911E-01	-0.1396438E-01	-0.4738572E-01	-0.6109970E-01	-0.4656021E-01
-0.1625189E-02	0.3189631E-01	0.3746778E-01	0.2094627E-13	0.3727569E-01	0.3642724E-01	0.2859026E-01
0.1475316E-01	-0.1174549E-02	-0.1459526E-01	-0.2071668E-01	-0.1559912E-01	0.1935828E-02	-0.7607319E-01
-0.9064157E-01	-0.4902954E-14	-0.9034688E-01	-0.8940552E-01	-0.7073012E-01	-0.3668883E-01	0.3193924E-02
0.3697920E-01	0.5259752E-01	0.3996643E-01	-0.3738775E-02	-0.3159188E-01	-0.3710988E-01	0.4985683E-14
-0.3697018E-01	-0.3604231E-01	-0.2809100E-01	-0.1427615E-01	0.1681889E-02	0.1518942E-01	0.2144243E-01
0.1631576E-01	-0.1412026E-02	0.7719540E-01	0.9140337E-01	0.2493293E-13	0.9109173E-01	0.8959361E-01
0.7038998E-01	0.3600748E-01	-0.4024523E-02	-0.3779866E-01	-0.5326019E-01	-0.4031745E-01	0.3768148E-02
0.4320464E-04	0.4167110E-04	0.3659366E-04	0.3659383E-04	0.8741241E-05	0.4557509E-05	0.8333495E-01
0.8214166E-01	-0.3488920E-01	-0.3439467E-01	-0.8383539E-01	-0.8237035E-01	0.3518529E-01	0.3457703E-01
0.5599593E-01	0.7738631E-01	0.2299528E-01	0.3183105E-01	-0.5598768E-01	-0.7739867E-01	-0.2301715E-01
-0.3184559E-01	-0.9334655E-06	-0.2403804E-05	-0.9368677E-03	0.2267250E-05	0.6544565E-01	0.1568161E-00
-0.9362007E-02	0.7763576E-04	-0.1017796E-03	-0.1091401E-02	-0.5896376E-01	0.8316173E-02	-0.1724314E-00
-0.6952533E-05	-0.1443734E-02	0.1281635E-03	-0.6563556E-01	-0.1571901E-00	0.9735883E-02	-0.7239263E-04
0.1031839E-03	0.1096522E-02	0.5908450E-01	-0.8560492E-02	0.1728889E-00	0.1212472E-04	0.1446448E-02
-0.1303639E-03	0.1539545E-00	0.6784058E-02	0.3541480E-01	0.1661075E-03	-0.1134564E-02	0.2944585E-03
-0.3049938E-02	-0.1507648E-00	0.1013055E-02	-0.5858679E-03	0.4528924E-04	-0.1152699E-02	-0.1539655E-00
-0.6519209E-02	-0.3539230E-01	-0.1634261E-03	0.1132164E-02	-0.2852719E-03	0.3138153E-02	0.1509524E-00
-0.1009817E-02	0.5824043E-03	-0.4428596E-04	0.1159400E-02			

SA-5 RUN #1 MODE 22 XN = .3567154

0.2616768E-00	0.2523463E-00	0.2336940E-00	0.2150853E-00	0.1966471E-00	0.1784711E-00	0.1605761E-00
0.1429059E-00	0.1253517E-00	0.1081757E-00	0.9148856E-01	0.7540742E-01	0.5981587E-01	0.4455750E-01
0.2983661E-01	0.1568119E-01	0.2295528E-02	-0.1005812E-01	-0.1944375E-01	-0.2595368E-01	-0.3017554E-01
-0.3245472E-01	-0.3366056E-01	-0.2088956E-01	-0.3303510E-01	-0.3422244E-01	-0.3423781E-01	-0.3368219E-01
0.	0.	0.3949719E-03	-0.3181589E-01	0.	0.	0.
0.	0.3691321E-01	0.6757796E-01	0.1937589E-01	0.1887549E-01	0.	0.1773329E-01
0.1332751E-01	-0.6118961E-02	-0.3887779E-01	-0.8483749E-01	-0.1255088E-00	-0.1316088E-00	-0.9815522E-01
-0.1295395E-01	0.1094511E-00	0.6400652E-01	0.5535427E-01	0.	0.5448296E-01	0.3699900E-01
0.1424202E-01	-0.7618451E-02	-0.2472998E-01	-0.3436424E-01	-0.3273375E-01	-0.1520240E-01	0.1887915E-01
-0.2901571E-01	-0.2704375E-01	0.	-0.2670017E-01	-0.1963972E-01	-0.8834686E-02	0.2745748E-02
0.1273515E-01	0.1885057E-01	0.1883382E-01	0.1044355E-01	-0.6244431E-02	-0.6433373E-01	-0.5588854E-01
0.	-0.5481269E-01	-0.3743976E-01	-0.1457785E-01	0.7483199E-02	0.2482305E-01	0.3461360E-01
0.3305482E-01	0.1550682E-01	-0.1869991E-01	0.2975832E-01	0.2816007E-01	0.	0.2776276E-01
0.2096103E-01	0.1011285E-01	-0.1863401E-02	-0.1221463E-01	-0.1869759E-01	-0.1893757E-01	-0.1064965E-01
0.6077125E-02	0.5913585E-01	0.3979065E-01	-0.	0.3875930E-01	0.1678431E-01	-0.3389520E-02
-0.1647665E-01	-0.2222613E-01	-0.2240697E-01	-0.1682133E-01	-0.2270249E-02	0.2315072E-01	0.2406750E-01
0.1817505E-01	-0.	0.1775686E-01	0.9742745E-02	0.1301486E-02	-0.5090280E-02	-0.8945910E-02
-0.1039342E-01	-0.8844478E-02	-0.2704462E-02	0.8702659E-02	-0.5905693E-01	-0.3980416E-01	-0.
-0.3875998E-01	-0.1704428E-01	0.2835903E-02	0.1574188E-01	0.2146267E-01	0.2172005E-01	0.1630176E-01
0.1949762E-02	-0.2326011E-01	-0.2379781E-01	-0.1783554E-01	-0.	-0.1742250E-01	-0.9504322E-02
-0.1471853E-02	0.4678562E-02	0.8389078E-02	0.9786686E-02	0.8330541E-02	0.2346895E-02	-0.8836489E-02
0.1798253E-02	0.1803384E-02	0.1740290E-02	0.1716009E-02	0.1643718E-02	0.1618946E-02	0.1573624E-02
0.1507820E-02	0.1444580E-02	0.1358806E-02	0.1369142E-02	0.1307537E-02	0.1226660E-02	0.1172752E-02
0.1140239E-02	0.1037527E-02	0.9666220E-03	0.1020280E-02	0.9415550E-03	0.8765475E-03	0.8517610E-03
0.8087490E-03	0.7703766E-03	0.3411240E-02	0.8222087E-03	0.7053905E-03	0.6561443E-03	0.6636157E-03
0.1882318E-04	-0.	-0.5267318E-04	0.6274788E-03	-0.	-0.	-0.
-0.	-0.3616902E-02	-0.1932566E-02	-0.5352139E-02	-0.6118351E-02	-0.	-0.6755751E-02
-0.7476941E-02	-0.8414032E-02	-0.8833321E-02	-0.8662967E-02	-0.7594889E-02	-0.5797665E-02	-0.3714161E-02
-0.1648046E-02	-0.1091117E-02	-0.2986156E-01	-0.3062380E-01	-0.1122977E-14	-0.3045207E-01	-0.2807169E-01
-0.2269001E-01	-0.1416012E-01	-0.2459376E-02	0.1040754E-01	0.1942154E-01	0.1725304E-01	-0.5421440E-03
-0.7030373E-01	-0.7486025E-01	-0.1041936E-13	-0.7451257E-01	-0.7041307E-01	-0.5788574E-01	-0.3625061E-01
-0.6060500E-02	0.2738932E-01	0.5094504E-01	0.4573291E-01	0.5905830E-03	0.3012563E-01	0.3039488E-01
-0.4274305E-14	0.3023440E-01	0.2755693E-01	0.2208442E-01	0.1368366E-01	0.2291028E-02	-0.1025487E-01
-0.1900138E-01	-0.1665526E-01	0.1145022E-02	0.7048126E-01	0.7474844E-01	0.2633418E-13	0.7439412E-01
0.7009180E-01	0.5745152E-01	0.3592208E-01	0.5943699E-02	-0.2718284E-01	-0.5047191E-01	-0.4509591E-01
0.3515516E-04	0.2976406E-01	0.3542759E-01	0.1658215E-13	0.3526738E-01	0.3539995E-01	0.3116603E-01
0.2343928E-01	0.1314538E-01	0.1386000E-02	-0.7953534E-02	-0.8213006E-02	0.5853116E-02	-0.7471961E-01
-0.8363516E-01	-0.3752769E-14	-0.8293335E-01	-0.7514998E-01	-0.5593461E-01	-0.3070746E-01	-0.2899770E-02
0.2396892E-01	0.4121454E-01	0.3388561E-01	-0.8570450E-02	-0.3044971E-01	-0.3653226E-01	0.3844513E-14
-0.3640719E-01	-0.3631283E-01	-0.3126530E-01	-0.2278454E-01	-0.1203570E-01	-0.1846959E-03	0.9070183E-02
0.9144117E-02	-0.5124555E-02	0.7611026E-01	0.8483884E-01	0.1948624E-13	0.8409098E-01	0.7542075E-01
0.5491614E-01	0.2866342E-01	0.5012845E-03	-0.2604513E-01	-0.4255943E-01	-0.3439730E-01	0.8733998E-02
0.1418649E-03	0.1427488E-03	0.1447076E-03	0.1447077E-03	-0.9417247E-04	-0.5174022E-04	0.8556573E-01
0.8464480E-01	-0.3733675E-01	-0.3692417E-01	-0.8599153E-01	-0.8484363E-01	0.3760687E-01	0.3709338E-01
0.5827866E-01	0.8227689E-01	0.2354139E-01	0.3334471E-01	-0.5826005E-01	-0.8229566E-01	-0.2354713E-01
-0.3334702E-01	-0.2782077E-04	-0.8859121E-05	-0.1050014E-02	0.3717111E-05	0.7125925E-01	0.1599117E-00
-0.2519082E-02	-0.1815661E-03	-0.2846396E-03	-0.9843119E-03	-0.6669943E-01	0.2231809E-02	-0.1803977E-00
0.5902470E-04	-0.1358613E-02	0.9001043E-04	-0.7154907E-01	-0.1605302E-00	0.3147801E-02	0.1901427E-03
0.2869960E-03	0.9890676E-03	0.6674999E-01	-0.2754630E-02	0.1811253E-00	-0.5124999E-04	0.1362167E-02
-0.9087086E-04	0.1648585E-00	0.1089598E-01	0.3351388E-01	0.1920854E-03	-0.8989355E-03	0.6848852E-03
-0.7987882E-02	-0.1707643E-00	0.1354774E-03	-0.7383518E-03	0.1341047E-03	-0.2121440E-02	-0.1648503E-00
-0.1047770E-01	-0.3357002E-01	-0.1898048E-03	0.8965449E-03	-0.6692092E-03	0.8124065E-02	0.1710686E-00
-0.2027000E-03	0.7347667E-03	-0.1334365E-03	0.2130523E-02			

SA-5 RUN #2 MODE 1 XN = 30.86438

0.4707099E-02	0.4651715E-02	0.4541348E-02	0.4431596E-02	0.4321504E-02	0.4212062E-02	0.4102222E-02
0.3991947E-02	0.3881984E-02	0.3772201E-02	0.3662121E-02	0.3553162E-02	0.3443883E-02	0.3333898E-02
0.3224898E-02	0.3115759E-02	0.3006675E-02	0.2898110E-02	0.2789802E-02	0.2682758E-02	0.2576141E-02
0.2469734E-02	0.2363769E-02	-0.4153453E-03	0.2425243E-02	0.2258316E-02	0.2152568E-02	0.2046969E-02
-0.	-0.	-0.2457034E-01	0.1792724E-02	-0.	-0.	-0.
-0.	0.1550182E-02	0.1675449E-02	0.1408959E-02	0.1319431E-02	-0.	0.1239762E-02
0.1136669E-02	0.9473673E-03	0.7510495E-03	0.5032939E-03	0.2019571E-03	-0.1050993E-03	-0.4135016E-03
-0.7204216E-03	-0.1137751E-02	-0.1751892E-01	-0.1514693E-01	-0.	-0.1504722E-01	-0.1266748E-01
-0.1006091E-01	-0.7291076E-02	-0.4488287E-02	-0.1570358E-02	0.1407428E-02	0.4430592E-02	0.7483293E-02
-0.4630908E-01	-0.4002434E-01	-0.	-0.3976102E-01	-0.3345318E-01	-0.2654109E-01	-0.1919452E-01
-0.1175653E-01	-0.4015353E-02	0.3882234E-02	0.1189710E-01	0.1998594E-01	0.1752096E-01	0.1514602E-01
-0.	0.1504674E-01	0.1266512E-01	0.1005805E-01	0.7289845E-02	0.4487787E-02	0.1571039E-02
-0.1405703E-02	-0.4428662E-02	-0.7481189E-02	0.4630764E-01	0.4002403E-01	-0.	0.3975877E-01
0.3345201E-01	0.2654075E-01	0.1919375E-01	0.1175553E-01	0.4014770E-02	-0.3882741E-02	-0.1189847E-01
-0.1998767E-01	0.2032458E-01	0.1750655E-01	0.	0.1738956E-01	0.1458364E-01	0.1153605E-01
0.8313491E-02	0.5056554E-02	0.1665784E-02	-0.1795837E-02	-0.5309186E-02	-0.8853616E-02	-0.4509622E-01
-0.3891978E-01	0.	-0.3866313E-01	-0.3249609E-01	-0.2577562E-01	-0.1864926E-01	-0.1143489E-01
-0.3915319E-02	0.3765574E-02	0.1156501E-01	0.1943613E-01	-0.2032360E-01	-0.1751717E-01	0.
-0.1740014E-01	-0.1460191E-01	-0.1155746E-01	-0.8334692E-02	-0.5074622E-02	-0.1679515E-02	0.1786559E-02
0.5303970E-02	0.8852120E-02	0.4508899E-01	0.3890206E-01	0.	0.3864475E-01	0.3247152E-01
0.2574997E-01	0.1862598E-01	0.1141602E-01	0.3902018E-02	-0.3774238E-02	-0.1156993E-01	-0.1943775E-01
-0.1484796E-00	-0.1467260E-00	-0.1432184E-00	-0.1397117E-00	-0.1362066E-00	-0.1327023E-00	-0.1292008E-00
-0.1257018E-00	-0.1222027E-00	-0.1187091E-00	-0.1152194E-00	-0.1117380E-00	-0.1082606E-00	-0.1047896E-00
-0.1013230E-00	-0.9786515E-01	-0.9441587E-01	-0.9098099E-01	-0.8758379E-01	-0.8422496E-01	-0.8089823E-01
-0.7759836E-01	-0.7431379E-01	0.1338167E-01	-0.7621684E-01	-0.7103781E-01	-0.6777193E-01	-0.6451499E-01
0.1460597E-06	0.	0.7579974E 00	-0.5661300E-01	0.	0.	0.
0.	-0.4958992E-01	-0.5382252E-01	-0.4471799E-01	-0.4165908E-01	0.	-0.3892774E-01
-0.3539510E-01	-0.2897237E-01	-0.2248035E-01	-0.1458700E-01	-0.5410452E-02	0.3592754E-02	0.1249282E-01
0.2134382E-01	0.3386684E-01	-0.4619956E-01	-0.3966092E-01	0.5018879E-19	-0.3938805E-01	-0.3286194E-01
-0.2575527E-01	-0.1825325E-01	-0.1070912E-01	-0.2931435E-02	0.4897217E-02	0.1267301E-01	0.2028756E-01
0.1747567E-01	0.1503906E-01	0.7370844E-20	0.1493703E-01	0.1249498E-01	0.9821483E-02	0.6988608E-02
0.4132501E-02	0.1184080E-02	-0.1783931E-02	-0.4728437E-02	-0.7603737E-02	0.4616302E-01	0.3965118E-01
0.9085749E-20	0.3938000E-01	0.3287198E-01	0.2577662E-01	0.1827863E-01	0.1073180E-01	0.2947775E-02
-0.4888950E-02	-0.1267348E-01	-0.2029437E-01	-0.1749049E-01	-0.1502730E-01	0.3368705E-20	-0.1492473E-01
-0.1246337E-01	-0.9781085E-02	-0.6946930E-02	-0.4095470E-02	-0.1156343E-02	0.1800183E-02	0.4733407E-02
0.7599014E-02	-0.4473238E-01	-0.3792039E-01	-0.1509908E-20	-0.3765269E-01	-0.3111827E-01	-0.2420204E-01
-0.1702820E-01	-0.9875070E-02	-0.2508783E-02	0.4920782E-02	0.1234278E-01	0.1968642E-01	-0.2018610E-01
-0.1710250E-01	0.1246115E-19	-0.1698136E-01	-0.1402180E-01	-0.1088993E-01	-0.7643135E-02	-0.4406987E-02
-0.1077031E-02	0.2280436E-02	0.5634849E-02	0.8956980E-02	0.4470198E-01	0.3789195E-01	0.8048078E-19
0.3762463E-01	0.3109378E-01	0.2418356E-01	0.1701531E-01	0.9866053E-02	0.2502316E-02	-0.4926178E-02
-0.1234868E-01	-0.1969351E-01	0.2017022E-01	0.1712290E-01	-0.6796004E-19	0.1700195E-01	0.1404468E-01
0.1089852E-01	0.7632362E-02	0.4381639E-02	0.1043863E-02	-0.2313489E-02	-0.5660789E-02	-0.8972910E-02
-0.6637760E-05	-0.6456539E-05	-0.5857077E-05	-0.5857077E-05	0.8490533E-06	0.1117785E-05	0.3774861E-02
0.3774297E-02	0.1002802E-01	0.1002663E-01	-0.3776159E-02	-0.3775492E-02	-0.1002348E-01	-0.1002187E-01
-0.4352196E-02	-0.4398704E-02	0.9616580E-02	0.9720609E-02	0.4350715E-02	0.4399166E-02	-0.9614881E-02
-0.9718150E-02	0.9518843E-06	0.1060490E-03	0.3470769E-05	-0.3701303E-07	0.6527509E-02	-0.1316618E-02
0.3869164E-01	-0.2209573E-06	0.1063477E-03	0.4070475E-05	0.7938402E-02	0.3866678E-01	0.1312715E-02
-0.3058580E-06	0.3230463E-05	-0.1073021E-03	-0.6529577E-02	0.1321392E-02	-0.3869757E-01	0.1609272E-06
-0.1063514E-03	-0.3993992E-05	-0.7936531E-02	-0.3866045E-01	-0.1318530E-02	0.2321103E-06	-0.3245953E-05
0.1072775E-03	-0.1298160E-02	0.3806475E-01	-0.3737265E-03	0.1022654E-03	0.4337467E-05	-0.2169972E-05
0.3817161E-01	0.1277189E-02	0.4343208E-02	0.3434020E-05	-0.1051827E-03	-0.4694452E-06	0.1297393E-02
-0.3806752E-01	0.3763284E-03	-0.1022414E-03	-0.4377705E-05	0.2122359E-05	-0.3816849E-01	-0.1280931E-02
-0.4340489E-02	-0.3481965E-05	0.1051651E-03	0.3962860E-06			

77

SA-5 RUN #2 MODE 2 XN = 28 09667

0.1484806E-00	0.1467051E-00	0.1431449E-00	0.1395705E-00	0.1360070E-00	0.1324307E-00	0.1288681E-00
0.1253191E-00	0.1217646E-00	0.1182116E-00	0.1146760E-00	0.1111255E-00	0.1075905E-00	0.1040818E-00
0.1005593E-00	0.9705272E-01	0.9356056E-01	0.9008010E-01	0.8665776E-01	0.8327010E-01	0.7992573E-01
0.7662232E-01	0.7333458E-01	-0.1291521E-01	0.7523735E-01	0.7004964E-01	0.6678804E-01	0.6353871E-01
-0.	-0.	-0.7625829E 00	0.5558361E-01	-0.	-0.	-0.
-0.	0.4848278E-01	0.5245430E-01	0.4392402E-01	0.4105470E-01	-0.	0.3849850E-01
0.3519221E-01	0.2914424E-01	0.2292624E-01	0.1516675E-01	0.5842108E-02	-0.3578736E-02	-0.1302217E-01
-0.2244394E-01	-0.3538090E-01	0.4058993E-01	0.3614931E-01	-0.	0.3590953E-01	0.3064324E-01
0.2414948E-01	0.1692318E-01	0.9372152E-02	0.1698627E-02	-0.6002652E-02	-0.1376953E-01	-0.2165911E-01
-0.2678616E-01	-0.1870836E-01	-0.	-0.1850478E-01	-0.1283323E-01	-0.8860821E-02	-0.5825823E-02
-0.3550895E-02	-0.8658512E-03	0.2064231E-02	0.5005476E-02	0.7735673E-02	-0.4072221E-01	-0.3618831E-01
-0.	-0.3595831E-01	-0.3062628E-01	-0.2410055E-01	-0.1689649E-01	-0.9348313E-02	-0.1693301E-02
0.5987414E-02	0.1374883E-01	0.2162923E-01	0.2676491E-01	0.1866908E-01	-0.	0.1851424E-01
0.1282162E-01	0.8838406E-02	0.5819522E-02	0.3554033E-02	0.8613302E-03	-0.2068023E-02	-0.4984920E-02
-0.7702169E-02	0.4752553E-01	0.3866360E-01	0.	0.3835717E-01	0.3053805E-01	0.2300713E-01
0.1566266E-01	0.8694904E-02	0.1428005E-02	-0.5973063E-02	-0.1340591E-01	-0.2076675E-01	0.9205849E-02
0.1188675E-01	0.	0.1188682E-01	0.1238328E-01	0.1081506E-01	0.7952808E-02	0.4187385E-02
0.5704684E-03	-0.2886163E-02	-0.6356253E-02	-0.1002853E-01	-0.4804688E-01	-0.3893853E-01	0.
-0.3863579E-01	-0.3065331E-01	-0.2305423E-01	-0.1569069E-01	-0.8748517E-02	-0.1509230E-02	0.5886426E-02
0.1334246E-01	0.2074573E-01	-0.9707372E-02	-0.1213494E-01	0.	-0.1211435E-01	-0.1244531E-01
-0.1082549E-01	-0.7966531E-02	-0.4230924E-02	-0.6581038E-03	0.2795583E-02	0.6293519E-02	0.1000725E-01
0.9338340E-02	0.8984560E-02	0.8260720E-02	0.7548204E-02	0.6844708E-02	0.6113843E-02	0.5404751E-02
0.4734908E-02	0.4018665E-02	0.3359539E-02	0.2708545E-02	0.2091683E-02	0.1473015E-02	0.9183656E-03
0.3299624E-03	-0.1804743E-03	-0.6736997E-03	-0.1103787E-02	-0.1383952E-02	-0.1510475E-02	-0.1481878E-02
-0.1347074E-02	-0.1156937E-02	0.2634170E-01	-0.1266479E-02	-0.9430746E-03	-0.6620081E-03	-0.3537795E-03
0.1227447E-05	0.	0.5287111E-04	-0.6809272E-03	0.	0.	0.
0.	-0.1082349E-01	-0.1243845E-01	-0.2831579E-02	0.1663500E-02	0.	0.4442493E-02
0.6393521E-02	0.6171955E-02	0.3135472E-02	-0.1392735E-02	-0.5191254E-02	-0.6260643E-02	-0.5338445E-02
-0.3184667E-02	-0.2081314E-05	-0.2482251E-01	-0.1717992E-01	-0.4307525E-16	-0.1697726E-01	-0.1135034E-01
-0.7187769E-02	-0.3963153E-02	-0.1789351E-02	0.3678438E-03	0.2402022E-02	0.4548179E-02	0.7379475E-02
-0.4082921E-01	-0.3643409E-01	-0.4804663E-16	-0.3620576E-01	-0.3101712E-01	-0.2456959E-01	-0.1732982E-01
-0.9623858E-02	-0.1664620E-02	0.6402965E-02	0.1439770E-01	0.2199785E-01	0.2579540E-01	0.1767172E-01
-0.3888134E-16	0.1745910E-01	0.1151837E-01	0.7164664E-02	0.3858875E-02	0.1685357E-02	-0.4384117E-03
-0.2425473E-02	-0.4516864E-02	-0.7311812E-02	0.4176099E-01	0.3689765E-01	0.3103826E-16	0.3665954E-01
0.3114547E-01	0.2452879E-01	0.1722527E-01	0.9517461E-02	0.1594431E-02	-0.6424357E-02	-0.1437323E-01
-0.2193432E-01	0.1126116E-01	0.1302610E-01	-0.3935404E-16	0.1307559E-01	0.1433645E-01	0.1417456E-01
0.1249175E-01	0.9102067E-02	0.4918432E-02	0.1728017E-03	-0.4717654E-02	-0.9193754E-02	-0.4642235E-01
-0.3755240E-01	0.4299419E-16	-0.3721335E-01	-0.2890012E-01	-0.2077556E-01	-0.1304067E-01	-0.6066101E-02
0.8161316E-03	0.7556839E-02	0.1428319E-01	0.2118044E-01	-0.1046107E-01	-0.1251371E-01	0.1280708E-16
-0.1257761E-01	-0.1410533E-01	-0.1418235E-01	-0.1266067E-01	-0.9344373E-02	-0.5164064E-02	-0.3639974E-03
0.4621237E-02	0.9201829E-02	0.4707259E-01	0.3708122E-01	0.4070507E-17	0.3674265E-01	0.2818378E-01
0.2023972E-01	0.1284696E-01	0.6167150E-02	-0.5326327E-03	-0.7221104E-02	-0.1400446E-01	-0.2100897E-01
-0.1865262E-04	-0.2299555E-04	-0.3737186E-04	-0.3737188E-04	0.1176442E-03	0.2234312E-04	-0.9317113E-02
-0.9311561E-02	0.5769348E-02	0.5773297E-02	0.9364021E-02	0.9357887E-02	-0.5831682E-02	-0.5835525E-02
-0.1117065E-01	-0.1087433E-01	-0.5764603E-03	-0.1839526E-02	0.1112898E-01	0.1086605E-01	0.5223541E-03
0.1825033E-02	0.6686416E-05	0.3790604E-05	0.1080603E-03	0.1869654E-06	-0.7201678E-02	-0.4105043E-01
0.1017636E-02	0.4802867E-05	0.3464432E-04	0.9283378E-04	0.6799460E-02	0.3712539E-03	0.3983485E-01
0.1274292E-04	0.1125658E-03	0.1516400E-05	0.7262361E-02	0.4106991E-01	-0.9969865E-03	-0.4725002E-05
-0.3501571E-04	-0.9400288E-04	-0.6833852E-02	-0.3845374E-03	-0.3983692E-01	-0.1247316E-04	-0.1131169E-03
-0.8373641E-06	-0.3949127E-01	0.5859168E-03	-0.4536839E-02	0.2964168E-04	0.9547480E-04	0.9364760E-04
-0.7588809E-03	0.4034947E-01	0.8281027E-03	0.1208056E-03	-0.2968170E-04	0.2805888E-04	0.3951252E-01
-0.5822714E-03	0.4561052E-02	-0.3028277E-04	-0.9516601E-04	-0.9420366E-04	0.7335816E-03	-0.4033555E-01
-0.8016872E-03	-0.1200497E-03	0.2930369E-04	-0.2791053E-04			

SA-5 RUN #2 MODE 3 XN=3 486362

0.2438363E-01	0.2409573E-01	0.2352172E-01	0.2295146E-01	0.2238170E-01	0.2181742E-01	0.2125431E-01
0.2069126E-01	0.2013193E-01	0.1957699E-01	0.1902806E-01	0.1849295E-01	0.1796109E-01	0.1743256E-01
0.1691545E-01	0.1640612E-01	0.1590743E-01	0.1542789E-01	0.1499184E-01	0.1460479E-01	0.1425508E-01
0.1393611E-01	0.1363638E-01	0.1331194E-01	0.1380910E-01	0.1334861E-01	0.1307005E-01	0.1280216E-01
0.	0.	-0.1611129E-02	0.1217272E-01	0.	0.	0.
0.	-0.7606344E-02	-0.8216305E-02	-0.6656150E-02	-0.6023176E-02	0.	-0.5418248E-02
-0.4574546E-02	-0.2865593E-02	-0.9429203E-03	0.1569006E-02	0.4573617E-02	0.7400395E-02	0.9884563E-02
0.1185309E-01	0.1395278E-01	0.1328036E-01	0.2123215E-01	0.	0.2146537E-01	0.2759849E-01
0.3151120E-01	0.3234031E-01	0.3015816E-01	0.2516282E-01	0.1778160E-01	0.8490273E-02	-0.1992811E-02
0.7706958E-01	0.1405430E-00	0.	0.1424022E-00	0.1915303E-00	0.2238661E-00	0.2331749E-00
0.2196334E-00	0.1849928E-00	0.1322516E-00	0.6493412E-01	-0.1155290E-01	-0.1240856E-01	-0.1905056E-01
0.	-0.1924190E-01	-0.2432184E-01	-0.2746961E-01	-0.2794169E-01	-0.2583090E-01	-0.2129579E-01
-0.1471819E-01	-0.6514997E-02	0.2699662E-02	-0.7758159E-01	-0.1420237E-00	0.	-0.1439211E-00
-0.1938296E-00	-0.2267343E-00	-0.2363162E-00	-0.2227397E-00	-0.1877768E-00	-0.1344632E-00	-0.6636936E-01
0.1102947E-01	-0.1660967E-01	-0.1708407E-02	-0.	-0.1188212E-02	0.1187245E-01	0.2349804E-01
0.3252569E-01	0.3839246E-01	0.4119363E-01	0.4101668E-01	0.3829051E-01	0.3390320E-01	0.2782965E-01
0.8862197E-02	-0.	0.8163234E-02	-0.8504152E-02	-0.2356691E-01	-0.3569502E-01	-0.4409941E-01
-0.4893256E-01	-0.5020473E-01	-0.4836362E-01	-0.4446056E-01	0.1755576E-01	0.3476566E-02	-0.
0.2990150E-02	-0.9388405E-02	-0.2048915E-01	-0.2927888E-01	-0.3520098E-01	-0.3834975E-01	-0.3877956E-01
-0.3686598E-01	-0.3341506E-01	-0.2705746E-01	-0.7564294E-02	-0.	-0.6878626E-02	0.1024262E-01
0.2564505E-01	0.3792234E-01	0.4627067E-01	0.5086444E-01	0.5171543E-01	0.4931774E-01	0.4478269E-01
-0.1257485E-00	-0.1242157E-00	-0.1211421E-00	-0.1180780E-00	-0.1150261E-00	-0.1119607E-00	-0.1089194E-00
-0.1059114E-00	-0.1028758E-00	-0.9989553E-01	-0.9693368E-01	-0.9402689E-01	-0.9113474E-01	-0.8830489E-01
-0.8547239E-01	-0.8272251E-01	-0.8001623E-01	-0.7740262E-01	-0.7503032E-01	-0.7290308E-01	-0.7099598E-01
-0.6926046E-01	-0.6761958E-01	-0.9966254E-01	-0.6856666E-01	-0.6602904E-01	-0.6451859E-01	-0.6306147E-01
-0.1823392E-05	-0.	0.7044728E-02	-0.5910061E-01	-0.	-0.	-0.
-0.	0.4054137E-01	0.4294168E-01	0.3459199E-01	0.3066290E-01	-0.	0.2727198E-01
0.2298030E-01	0.1517367E-01	0.6940585E-02	-0.3635255E-02	-0.1626354E-01	-0.2811443E-01	-0.3850522E-01
-0.4671033E-01	-0.5598953E-01	0.3237695E-01	0.1438186E-01	0.1537545E-14	0.1373348E-01	-0.2290247E-02
-0.1700803E-01	-0.2934820E-01	-0.3864279E-01	-0.4529450E-01	-0.4936948E-01	-0.5131475E-01	-0.5205153E-01
-0.7390747E-02	-0.4663791E-02	-0.2159551E-14	-0.4564654E-02	-0.2130944E-02	0.1887279E-03	0.2298828E-02
0.4040942E-02	0.5471716E-02	0.6527091E-02	0.7199821E-02	0.7545109E-02	-0.3269980E-01	-0.1459223E-01
-0.5741851E-14	-0.1395064E-01	0.2108913E-02	0.1683038E-01	0.2917688E-01	0.3849547E-01	0.4518963E-01
0.4931425E-01	0.5130543E-01	0.5207865E-01	0.7052442E-02	0.4430536E-02	0.2011660E-13	0.4331524E-02
0.1937357E-02	-0.3763604E-03	-0.2476561E-02	-0.4189119E-02	-0.5574709E-02	-0.6578652E-02	-0.7203278E-02
-0.7510865E-02	0.3499872E-01	0.3256398E-01	0.9099081E-15	0.3232870E-01	0.2770378E-01	0.2077767E-01
0.1183219E-01	0.1827657E-02	-0.8854856E-02	-0.1936523E-01	-0.2902346E-01	-0.3742893E-01	0.2271356E-01
0.2087501E-01	-0.2311381E-14	0.2070115E-01	0.1724826E-01	0.1216912E-01	0.5770338E-02	-0.1271462E-02
-0.8651603E-02	-0.1582760E-01	-0.2239819E-01	-0.2817933E-01	-0.3492970E-01	-0.3225741E-01	-0.1766054E-14
-0.3201579E-01	-0.2722655E-01	-0.2021182E-01	-0.1125137E-01	-0.1284018E-02	0.9325461E-02	0.1973658E-01
0.2927850E-01	0.3756446E-01	-0.2322672E-01	-0.2114767E-01	0.2167176E-14	-0.2097837E-01	-0.1751641E-01
-0.1246786E-01	-0.6067736E-02	0.1014901E-02	0.8454218E-02	0.1569269E-01	0.2232376E-01	0.2816266E-01
0.1177967E-03	0.1179765E-03	0.1186517E-03	0.1186517E-03	-0.9515236E-04	-0.3074963E-04	-0.1525811E-02
-0.1525989E-02	-0.8224356E-02	-0.8219246E-02	0.1455259E-02	0.1455835E-02	0.8246966E-02	0.8240435E-02
0.2490984E-02	0.3502420E-02	-0.3674621E-02	-0.5124599E-02	-0.2455363E-02	-0.3518079E-02	0.3703923E-02
0.5107083E-02	-0.1968745E-04	-0.6937797E-04	-0.1563009E-04	0.2106769E-06	-0.1742149E-02	0.1468483E-01
-0.5966646E-01	0.1533075E-05	-0.5469771E-04	-0.1991834E-04	-0.7073980E-02	-0.6055079E-01	-0.1487752E-01
-0.3198713E-05	-0.1767330E-04	0.8923924E-04	0.1679627E-02	-0.1474393E-01	0.5968575E-01	-0.1115681E-05
0.5453186E-04	0.2051599E-04	0.7095737E-02	0.6052043E-01	0.1491803E-01	0.3607429E-05	0.1787091E-04
-0.9031856E-04	0.1334324E-01	-0.5952272E-01	0.6396788E-03	-0.8326218E-04	-0.2968358E-05	-0.3891409E-04
-0.5899331E-01	-0.1490635E-01	-0.3399428E-02	-0.1641039E-04	0.7697212E-04	-0.6845193E-05	-0.1335193E-01
0.5955244E-01	-0.6823011E-03	0.8409628E-04	0.2517635E-05	0.3955386E-04	0.5898457E-01	0.1491488E-01
0.3340034E-02	0.1574045E-04	-0.7599458E-04	0.6958062E-05			

SA-5 RUN #2 MODE 4 XN=3 486115

0.1986920E-01	0.1960621E-01	0.1905312E-01	0.1846031E-01	0.1789388E-01	0.1728855E-01	0.1671512E-01
0.1617503E-01	0.1561797E-01	0.1505704E-01	0.1453232E-01	0.1395267E-01	0.1340612E-01	0.1292171E-01
0.1238808E-01	0.1188370E-01	0.1140112E-01	0.1092409E-01	0.1053456E-01	0.1016813E-01	0.9862103E-02
0.9618240E-02	0.9388810E-02	0.1202030E-01	0.9515421E-02	0.9150758E-02	0.8960046E-02	0.8786367E-02
-0.	-0.	-0.1242418E-02	0.8261419E-02	-0.	-0.	-0.
-0.	-0.3302975E-02	-0.3808802E-02	-0.2499829E-02	-0.1949194E-02	-0.	-0.1436697E-02
-0.7373962E-03	0.6462902E-03	0.2171706E-02	0.4118600E-02	0.6350180E-02	0.8299022E-02	0.9832744E-02
0.1079080E-01	0.1155706E-01	0.1309756E-01	0.2754961E-01	-0.	0.2785700E-01	0.3745494E-01
0.4242106E-01	0.4281571E-01	0.3907675E-01	0.3232704E-01	0.2287174E-01	0.1100605E-01	-0.2648890E-02
0.6465976E-01	0.1423852E-00	-0.	0.1444437E-00	0.2008499E-00	0.2353175E-00	0.2441923E-00
0.2285281E-00	0.1923395E-00	0.1380912E-00	0.6861609E-01	-0.1109671E-01	-0.1267342E-01	-0.2574815E-01
-0.	-0.2604898E-01	-0.3457753E-01	-0.3881287E-01	-0.3896364E-01	-0.3527912E-01	-0.2895700E-01
-0.2023405E-01	-0.9313008E-02	0.3221310E-02	-0.6482253E-01	-0.1430565E-00	-0.	-0.1449963E-00
-0.2018224E-00	-0.2365887E-00	-0.2455503E-00	-0.2298562E-00	-0.1935614E-00	-0.1390793E-00	-0.6922173E-01
0.1089814E-01	-0.9879783E-02	-0.3851064E-02	0.	-0.3504633E-02	0.3904150E-02	0.1240619E-01
0.2025238E-01	0.2660476E-01	0.3054878E-01	0.3227774E-01	0.3230169E-01	0.3143526E-01	0.1457325E-01
0.4582716E-02	0.	0.3971731E-02	-0.9557489E-02	-0.2571537E-01	-0.4028257E-01	-0.5138674E-01
-0.5674333E-01	-0.5692692E-01	-0.5332532E-01	-0.4787665E-01	0.8709280E-02	0.2199233E-02	0.
0.1808169E-02	-0.6143624E-02	-0.1524267E-01	-0.2348518E-01	-0.2996728E-01	-0.3368817E-01	-0.3483609E-01
-0.3397718E-01	-0.3204332E-01	-0.1481354E-01	-0.3511090E-02	0.	-0.2835752E-02	0.1160630E-01
0.2824511E-01	0.4295391E-01	0.5392610E-01	0.5890784E-01	0.5860234E-01	0.5440325E-01	0.4827434E-01
-0.9667897E-01	-0.9611507E-01	-0.9502713E-01	-0.9392404E-01	-0.9281914E-01	-0.9179580E-01	-0.9075469E-01
-0.8964791E-01	-0.8865755E-01	-0.8758492E-01	-0.8653530E-01	-0.8548781E-01	-0.8448326E-01	-0.8338483E-01
-0.8241201E-01	-0.8133590E-01	-0.8030051E-01	-0.7924831E-01	-0.7818278E-01	-0.7709872E-01	-0.7593010E-01
-0.7474282E-01	-0.7355563E-01	-0.5568846E-01	-0.7423377E-01	-0.7238586E-01	-0.7113782E-01	-0.6990015E-01
-0.3036809E-05	0.	0.7575672E-02	-0.6942006E-01	0.	0.	0.
0.	0.2076791E-01	0.2301010E-01	0.3203795E-01	0.3809087E-01	0.	0.4055687E-01
0.3994296E-01	0.3050097E-01	0.1537095E-01	-0.3808152E-02	-0.2208083E-01	-0.3444041E-01	-0.4307644E-01
-0.4998907E-01	-0.5841782E-01	0.2030206E-01	0.7500962E-02	0.4495627E-15	0.6844593E-02	-0.7689564E-02
-0.2297037E-01	-0.3533247E-01	-0.4416022E-01	-0.4860710E-01	-0.5030354E-01	-0.5105064E-01	-0.5242056E-01
-0.6422428E-02	-0.7855743E-02	-0.8993956E-16	-0.7791995E-02	-0.7188962E-02	-0.4982450E-02	-0.2377145E-02
0.3408797E-03	0.2514285E-02	0.4506828E-02	0.6605853E-02	0.8789892E-02	-0.1817724E-01	-0.6181874E-02
-0.7218397E-16	-0.5531200E-02	0.8665276E-02	0.2390180E-01	0.3633742E-01	0.4521004E-01	0.4957057E-01
0.5105579E-01	0.5154453E-01	0.5266685E-01	0.8233112E-02	0.8509891E-02	0.1071367E-14	0.8431984E-02
0.7179800E-02	0.4784320E-02	0.2225844E-02	-0.3907389E-03	-0.2483044E-02	-0.4448031E-02	-0.6556461E-02
-0.8735829E-02	0.2681233E-01	0.3133277E-01	-0.7681075E-15	0.3123059E-01	0.3099915E-01	0.2564851E-01
0.1688119E-01	0.5723017E-02	-0.5412992E-02	-0.1637497E-01	-0.2727425E-01	-0.3819376E-01	0.1566656E-01
0.1679371E-01	0.2576507E-16	0.1668815E-01	0.1531518E-01	0.1135518E-01	0.5669119E-02	-0.1108849E-02
-0.7888592E-02	-0.1448609E-01	-0.2087211E-01	-0.2709408E-01	-0.2501840E-01	-0.3025211E-01	-0.2327986E-15
-0.3018620E-01	-0.3063045E-01	-0.2581009E-01	-0.1732967E-01	-0.6246504E-02	0.4941313E-02	0.1603488E-01
0.2711271E-01	0.3821526E-01	-0.1479397E-01	-0.1853643E-01	0.1452666E-15	-0.1840510E-01	-0.1730687E-01
-0.1270481E-01	-0.6230249E-02	0.1058950E-02	0.8063023E-02	0.1468987E-01	0.2102571E-01	0.2722413E-01
0.1513878E-03	0.1409996E-03	0.1064046E-03	0.1064045E-03	0.1388432E-03	-0.3204105E-05	-0.2426787E-02
-0.2378784E-02	-0.8012877E-02	-0.7904921E-02	0.2417345E-02	0.2362266E-02	0.7944804E-02	0.7815016E-02
0.4109858E-03	0.2306916E-02	0.1164996E-03	-0.4647945E-02	-0.4453121E-03	-0.2309058E-02	-0.2324855E-03
0.4544797E-02	-0.1801059E-04	-0.1029556E-03	-0.5254612E-05	-0.6742182E-07	-0.4387022E-02	0.1079504E-01
-0.6124249E-01	0.9583652E-05	-0.2751071E-04	-0.3205247E-04	-0.8984410E-02	-0.6299904E-01	-0.1329797E-01
0.2738965E-04	0.6228508E-05	0.1163802E-03	0.4319871E-02	-0.1074402E-01	0.6117312E-01	-0.1050190E-04
0.2527197E-04	0.3125464E-04	0.8925092E-02	0.6303494E-01	0.1326241E-01	-0.2794206E-04	-0.6426891E-05
-0.1166113E-03	0.1133144E-01	-0.6249777E-01	0.2775448E-03	-0.6909776E-04	-0.1581595E-04	0.8299903E-04
-0.6417043E-01	-0.1141225E-01	-0.2746444E-02	0.1449706E-04	0.5184959E-04	0.2129215E-04	-0.1126110E-01
0.6250208E-01	-0.2989173E-03	0.6987243E-04	0.1548593E-04	-0.8410271E-04	0.6412425E-01	0.1136627E-01
0.2726733E-02	-0.1523836E-04	-0.5189030E-04	-0.2224704E-04			

SA-5 RUN #2 MODE 5 XN = 3 276448

0.3738097E-01	0.3685033E-01	0.3574966E-01	0.3459064E-01	0.3347141E-01	0.3229580E-01	0.3116867E-01
0.3009155E-01	0.2898977E-01	0.2788455E-01	0.2683580E-01	0.2571013E-01	0.2463574E-01	0.2365568E-01
0.2260639E-01	0.2160421E-01	0.2063914E-01	0.1968989E-01	0.1889005E-01	0.1814503E-01	0.1750585E-01
0.1697290E-01	0.1646952E-01	0.2288839E-01	0.1675132E-01	0.1595825E-01	0.1552172E-01	0.1511507E-01
-0.	-0.	-0.1944278E-02	0.1392128E-01	-0.	-0.	-0.
-0.	-0.8867906E-02	-0.9593190E-02	-0.7629083E-02	-0.6760050E-02	-0.	-0.5943464E-02
-0.4815099E-02	-0.2534252E-02	0.4783884E-04	0.3435427E-02	0.7451943E-02	0.1111323E-01	0.1415167E-01
0.1627639E-01	0.1812174E-01	-0.4267494E-01	-0.3634168E-01	-0.	-0.3623563E-01	-0.3203126E-01
-0.2822344E-01	-0.2290732E-01	-0.1594819E-01	-0.6275972E-02	0.5246688E-02	0.1770482E-01	0.3021776E-01
-0.6135702E-01	-0.1711469E-01	-0.	-0.1598386E-01	0.1553366E-01	0.3738744E-01	0.5159549E-01
0.5875923E-01	0.6257790E-01	0.6236578E-01	0.5752288E-01	0.4855948E-01	0.4257118E-01	0.3772957E-01
-0.	0.3761676E-01	0.3456161E-01	0.3153182E-01	0.2645610E-01	0.1948271E-01	0.9416751E-02
-0.2799045E-02	-0.1614042E-01	-0.2971742E-01	0.6132456E-01	0.1708970E-01	-0.	0.1615755E-01
-0.1536783E-01	-0.3721470E-01	-0.5132877E-01	-0.5845791E-01	-0.6234316E-01	-0.6219778E-01	-0.5735689E-01
-0.4845850E-01	0.2336854E-01	0.1697295E-01	0.	0.1691109E-01	0.1373762E-01	0.1262122E-01
0.1193163E-01	0.1113971E-01	0.8765168E-02	0.5271895E-02	0.1249518E-02	-0.2704686E-02	-0.9710251E-01
-0.1013158E-00	0.	-0.1016337E-00	-0.1087019E-00	-0.1150306E-00	-0.1138303E-00	-0.1034920E-00
-0.8067165E-01	-0.4769946E-01	-0.7837658E-02	0.3511285E-01	-0.2847561E-01	-0.2640598E-01	0.
-0.2653180E-01	-0.2709689E-01	-0.2906322E-01	-0.2999718E-01	-0.2919987E-01	-0.2508869E-01	-0.1825255E-01
-0.9576451E-02	-0.1671069E-03	0.9254694E-01	0.9373763E-01	0.	0.9400510E-01	0.9839579E-01
0.1024093E-00	0.9995684E-01	0.8965164E-01	0.6813121E-01	0.3775759E-01	0.1503345E-02	-0.3725310E-01
0.2184440E-00	0.2146378E-00	0.2069640E-00	0.1993322E-00	0.1917342E-00	0.1840229E-00	0.1763964E-00
0.1689234E-00	0.1612675E-00	0.1538437E-00	0.1464584E-00	0.1392347E-00	0.1320189E-00	0.1250688E-00
0.1180072E-00	0.1112801E-00	0.1046535E-00	0.9832433E-01	0.9273825E-01	0.8791718E-01	0.8384145E-01
0.8030576E-01	0.7706132E-01	0.1934663E-00	0.7893775E-01	0.7395736E-01	0.7116426E-01	0.6852833E-01
-0.2372436E-06	0.	-0.7452062E-02	0.5763738E-01	0.	0.	0.
0.	-0.9059958E-01	-0.9462395E-01	-0.5915236E-01	-0.4047049E-01	0.	-0.2811444E-01
-0.1763106E-01	-0.1021353E-01	-0.9806166E-02	-0.8991461E-02	-0.1036765E-02	0.1415556E-01	0.3152274E-01
0.4614389E-01	0.6147656E-01	-0.6411431E-01	-0.4195209E-01	0.1436478E-15	-0.4139516E-01	-0.2540440E-01
-0.1249141E-01	0.1998185E-03	0.1188779E-01	0.2440502E-01	0.3506717E-01	0.4173604E-01	0.4390023E-01
0.3371314E-01	0.1347704E-01	-0.3209032E-16	0.1289600E-01	-0.2732854E-02	-0.1510337E-01	-0.2484023E-01
-0.3163190E-01	-0.3668885E-01	-0.3937399E-01	-0.3952752E-01	-0.3803042E-01	0.6767847E-01	0.4424166E-01
-0.2861062E-16	0.4368604E-01	0.2714794E-01	0.1413522E-01	0.1517025E-02	-0.1015461E-01	-0.2286360E-01
-0.3390936E-01	-0.4102699E-01	-0.4360366E-01	-0.3027505E-01	-0.1169545E-01	0.3297430E-15	-0.1113396E-01
0.3586364E-02	0.1570108E-01	0.2548193E-01	0.3233733E-01	0.3737018E-01	0.3991088E-01	0.3984868E-01
0.3816796E-01	-0.7671799E-01	-0.6355645E-01	-0.2310800E-15	-0.6299374E-01	-0.4960954E-01	-0.3627586E-01
-0.2152535E-01	-0.6645321E-02	0.1053232E-01	0.2758420E-01	0.4209402E-01	0.5261829E-01	-0.2020371E-01
-0.1570837E-01	0.6528293E-17	-0.1558301E-01	-0.1201990E-01	-0.9417819E-02	-0.6939538E-02	-0.4760080E-02
-0.1783721E-02	0.1255112E-02	0.3574349E-02	0.4656566E-02	0.7923106E-01	0.6465242E-01	-0.9309499E-16
0.6402535E-01	0.4936988E-01	0.3507916E-01	0.1985208E-01	0.4915375E-02	-0.1204564E-01	-0.2870559E-01
-0.4272978E-01	-0.5277237E-01	0.2231967E-01	0.1346819E-01	0.3407687E-16	0.1337929E-01	0.9198836E-02
0.7461492E-02	0.6125597E-02	0.4696753E-02	0.2045612E-02	-0.9579509E-03	-0.3358686E-02	-0.4485345E-02
-0.1945164E-03	-0.2100333E-03	-0.2617262E-03	-0.2617263E-03	0.5240461E-03	0.1050095E-03	0.5940950E-02
0.6002537E-02	0.9946702E-02	0.1008473E-01	-0.5818986E-02	-0.5889205E-02	-0.1001861E-01	-0.1018473E-01
-0.4014403E-02	-0.3175515E-02	0.1145610E-01	0.9829687E-02	0.3821196E-02	0.3195451E-02	-0.1168730E-01
-0.9886206E-02	0.4561297E-04	0.5569536E-04	-0.1207933E-04	-0.4153667E-06	0.3860205E-02	0.1821053E-01
0.6908673E-01	0.1047374E-04	0.1396359E-03	-0.4377095E-04	0.5131820E-02	0.6797403E-01	-0.2072857E-01
0.4820557E-04	0.2252378E-04	-0.7449793E-04	-0.3804361E-02	-0.1800584E-01	-0.6920620E-01	-0.1255513E-04
-0.1421957E-03	0.4233634E-04	-0.5220528E-02	-0.6782886E-01	0.2059328E-01	-0.4964350E-04	-0.2382088E-04
0.7601115E-04	0.2167271E-01	0.6634251E-01	0.1161812E-02	0.1529708E-03	-0.8048259E-04	0.2338474E-03
0.6119580E-01	-0.1769982E-01	0.5979116E-02	0.1060498E-04	-0.1386668E-03	0.2720119E-04	-0.2154189E-01
-0.6638998E-01	-0.1013392E-02	-0.1534817E-03	0.7965445E-04	-0.2365458E-03	-0.6122723E-01	0.1761773E-01
-0.5825933E-02	-0.1041694E-04	0.1370668E-03	-0.2878401E-04			

SA-5 RUN #2 MODE 6 XN = 3 272423

0.4349478E-03	0.2716720E-03	0.3934140E-03	0.1189873E-02	0.1628200E-02	0.2776722E-02	0.3508305E-02
0.3764100E-02	0.4358835E-02	0.5110025E-02	0.5443399E-02	0.6852007E-02	0.7821153E-02	0.7922976E-02
0.8957921E-02	0.9687665E-02	0.1026621E-01	0.1107179E-01	0.1122451E-01	0.1175154E-01	0.1188990E-01
0.1149366E-01	0.1112314E-01	-0.3352659E-02	0.1142318E-01	0.1102032E-01	0.1029179E-01	0.9402146E-02
0.	0.	-0.9313934E-03	0.8365653E-02	0.	0.	0.
0.	-0.3687373E-02	-0.6643752E-02	-0.6194166E-03	0.4194575E-03	0.	0.1507076E-02
0.2981289E-02	0.5416037E-02	0.7152870E-02	0.8236512E-02	0.8478065E-02	0.8241509E-02	0.8152853E-02
0.8669164E-02	0.1138738E-01	0.1377842E-01	0.2447377E-03	0.	0.1167486E-02	0.7115059E-02
0.2023062E-01	0.2849670E-01	0.3404419E-01	0.3451979E-01	0.3338209E-01	0.3225325E-01	0.3285308E-01
0.4240200E-01	-0.5782269E-02	0.	-0.4699692E-02	0.1061456E-02	0.2728881E-01	0.4318017E-01
0.5448021E-01	0.5416058E-01	0.5155359E-01	0.5085725E-01	0.5451427E-01	-0.9236246E-02	0.2494654E-02
0.	0.2104391E-02	-0.4275236E-02	-0.1701343E-01	-0.2387887E-01	-0.2986121E-01	-0.3066682E-01
-0.2999592E-01	-0.2998931E-01	-0.3153828E-01	-0.4501877E-01	0.6791555E-02	0.	0.3620948E-02
0.4312234E-04	-0.2508767E-01	-0.4163205E-01	-0.5354638E-01	-0.5324978E-01	-0.5089958E-01	-0.5116221E-01
-0.5507692E-01	-0.1457755E-01	0.2113910E-01	-0.	0.2088038E-01	0.3049405E-01	0.2716726E-01
0.2292597E-01	0.1722423E-01	0.1396683E-01	0.8879362E-02	0.7089328E-03	-0.1087581E-01	0.2125546E-01
-0.7800890E-01	-0.	-0.7887039E-01	-0.1141500E-00	-0.1143430E-00	-0.1081810E-00	-0.9245705E-01
-0.7603313E-01	-0.5006587E-01	-0.1165201E-01	0.3804614E-01	0.2119764E-01	-0.2251348E-01	-0.
-0.2189628E-01	-0.3507527E-01	-0.3193454E-01	-0.2777400E-01	-0.2172704E-01	-0.1812571E-01	-0.1243961E-01
-0.3126922E-02	0.1015334E-01	-0.1252606E-01	0.8171444E-01	-0.	0.8193810E-01	0.1159581E-00
0.1180093E-00	0.1128867E-00	0.9695028E-01	0.8019178E-01	0.5281732E-01	0.1299841E-01	-0.3764890E-01
0.1612266E-00	0.1584366E-00	0.1536557E-00	0.1485637E-00	0.1433896E-00	0.1398540E-00	0.1359434E-00
0.1306630E-00	0.1277889E-00	0.1231925E-00	0.1191220E-00	0.1151382E-00	0.1120766E-00	0.1070757E-00
0.1047424E-00	0.1003132E-00	0.9681777E-01	0.9306632E-01	0.8929712E-01	0.8543404E-01	0.8004869E-01
0.7444099E-01	0.6894561E-01	-0.4526320E-00	0.7190633E-01	0.6387791E-01	0.5723462E-01	0.5087448E-01
0.2050730E-03	-0.	-0.7441885E-02	0.7034950E-01	-0.	-0.	-0.
-0.	0.1410221E-00	0.7227106E-01	0.4982054E-02	-0.8192349E-01	-0.	-0.1259109E-00
-0.1440580E-00	-0.1081818E-00	-0.4793289E-01	0.1507441E-02	0.1724089E-01	0.1473574E-01	0.1850667E-01
0.4504726E-01	0.5857693E-01	0.9868840E-02	-0.3758580E-01	0.4398160E-13	-0.3732268E-01	-0.4583324E-01
-0.3508947E-01	-0.2554545E-01	-0.8984309E-02	0.2369304E-02	0.1298096E-01	0.2334853E-01	0.4094097E-01
0.1251216E-02	0.8106477E-02	-0.1073650E-12	0.7227339E-02	-0.3892970E-02	-0.2231713E-01	-0.3505613E-01
-0.4454576E-01	-0.4639412E-01	-0.4362769E-01	-0.3831691E-01	-0.3598254E-01	-0.1794346E-01	0.1691287E-01
-0.2829377E-12	0.1535485E-01	0.4220849E-02	-0.2609672E-01	-0.4687855E-01	-0.6398268E-01	-0.6635720E-01
-0.6160826E-01	-0.5431058E-01	-0.5593268E-01	-0.6428026E-02	-0.2217830E-01	0.9222907E-12	-0.2223454E-01
-0.2726668E-01	-0.2663980E-01	-0.2474844E-01	-0.1654637E-01	-0.7904984E-02	0.1681821E-02	0.1109622E-01
0.2217645E-01	0.6267558E-02	-0.3596874E-01	0.8566461E-13	-0.3514095E-01	-0.3932597E-01	-0.2173364E-01
-0.6131758E-02	0.1184957E-01	0.2029166E-01	0.2680479E-01	0.3531236E-01	0.5211238E-01	0.1210991E-01
0.2157233E-03	-0.1100937E-12	0.7324595E-03	0.3560310E-02	0.1377417E-01	0.2065707E-01	0.2580773E-01
0.2420867E-01	0.1960621E-01	0.1470443E-01	0.1389449E-01	0.7916488E-02	0.6819448E-01	-0.7278906E-13
0.6798904E-01	0.8591571E-01	0.7501811E-01	0.5925903E-01	0.3612669E-01	0.1889268E-01	0.5406952E-03
-0.2179395E-01	-0.5245553E-01	0.5534769E-02	0.4944152E-01	0.1003185E-12	0.4816437E-01	0.4350245E-01
0.2504904E-01	0.1213200E-01	0.2776631E-02	-0.1306857E-02	-0.4835339E-02	-0.9377427E-02	-0.1763996E-01
0.8305909E-04	0.1086221E-03	0.2071489E-03	0.2071497E-03	-0.1144260E-02	-0.2523492E-04	0.6218632E-02
0.5778510E-02	0.7119348E-02	0.6109081E-02	-0.7872510E-02	-0.7301905E-02	-0.5934657E-02	-0.4787662E-02
0.9946258E-02	0.9618028E-03	-0.2846639E-01	0.2978541E-02	-0.9473793E-02	-0.1313128E-02	0.2958627E-01
-0.2599919E-02	0.1803391E-04	0.3649154E-03	-0.3196793E-04	-0.4348873E-04	0.2978802E-01	0.1822177E-01
0.7336104E-01	-0.1324800E-03	-0.5293433E-04	0.1672893E-04	0.2832142E-01	0.8039526E-01	-0.9646644E-02
-0.2712314E-03	-0.1719565E-03	-0.3103912E-04	-0.2647807E-01	-0.1377894E-01	-0.7897378E-01	0.4404532E-04
0.7836142E-04	-0.4012595E-04	-0.2330646E-01	-0.7513306E-01	0.4271492E-02	0.1776140E-03	0.1933821E-03
-0.3729308E-04	0.1175789E-01	0.8074182E-01	0.1136309E-02	0.4411712E-03	-0.5749030E-04	-0.3630077E-03
0.8415449E-01	-0.1560134E-01	0.2721757E-02	-0.8030355E-04	0.1538015E-03	-0.1530050E-03	-0.1515858E-01
-0.8381351E-01	-0.2082876E-02	-0.4018754E-03	0.8951194E-04	0.2714252E-03	-0.8586641E-01	0.1217518E-01
-0.3661682E-02	0.8664657E-04	-0.1087061E-03	0.4793882E-04			

SA-5 RUN #2 MODE 7 XN = 3 166736

0.1437564E-00	0.1416286E-00	0.1372335E-00	0.1326329E-00	0.1281739E-00	0.1235176E-00	0.1190343E-00
0.1147292E-00	0.1103386E-00	0.1059380E-00	0.1017417E-00	0.9727888E-01	0.9300089E-01	0.8905982E-01
0.8487877E-01	0.8086940E-01	0.7699796E-01	0.7319259E-01	0.6994227E-01	0.6691283E-01	0.6427958E-01
0.6204033E-01	0.5991632E-01	0.8704497E-01	0.6111148E-01	0.5777069E-01	0.5589519E-01	0.5413169E-01
0.	0.	-0.6624456E-02	0.4916992E-01	0.	0.	0.
0.	-0.3921393E-01	-0.4150216E-01	-0.3506445E-01	-0.3209613E-01	0.	-0.2928621E-01
-0.2536594E-01	-0.1731635E-01	-0.8034864E-02	0.4356988E-02	0.1933436E-01	0.3327549E-01	0.4509129E-01
0.5366791E-01	0.6140177E-01	-0.7162902E-01	-0.5862347E-01	0.	-0.5871624E-01	-0.5459125E-01
-0.5472759E-01	-0.5225269E-01	-0.4565272E-01	-0.3100270E-01	-0.1046775E-01	0.1330727E-01	0.3751490E-01
-0.4946271E-01	0.1549589E-02	0.	0.1851105E-02	0.2073173E-01	0.1624061E-01	0.3311747E-02
-0.1272893E-01	-0.2027170E-01	-0.2239560E-01	-0.2350425E-01	-0.2730474E-01	0.7013322E-01	0.5910673E-01
0.	0.5907487E-01	0.5636838E-01	0.5732009E-01	0.5475725E-01	0.4818797E-01	0.3316822E-01
0.1203401E-01	-0.1233049E-01	-0.3732903E-01	0.4938293E-01	-0.1966813E-02	0.	-0.1578086E-02
-0.2078615E-01	-0.1648851E-01	-0.3346012E-02	0.1280426E-01	0.2019661E-01	0.2225569E-01	0.2359921E-01
0.2745729E-01	-0.3594799E-01	-0.9930301E-01	-0.	-0.1006471E-00	-0.1420431E-00	-0.1634127E-00
-0.1651104E-00	-0.1486389E-00	-0.1197948E-00	-0.7962354E-01	-0.2950642E-01	0.2783414E-01	-0.9307635E-01
-0.4827786E-01	-0.	-0.4789655E-01	-0.3144144E-01	-0.3534779E-01	-0.4456818E-01	-0.5331228E-01
-0.4879102E-01	-0.3409656E-01	-0.1455968E-01	0.4598128E-02	0.1794763E-01	0.6162586E-01	-0.
0.6216132E-01	0.8673778E-01	0.9441469E-01	0.8884362E-01	0.7221547E-01	0.5065484E-01	0.2462005E-01
-0.5781084E-02	-0.3999254E-01	0.7549402E-01	0.1198524E-01	-0.	0.1117465E-01	-0.2133037E-01
-0.3066943E-01	-0.2858874E-01	-0.1990041E-01	-0.1753422E-01	-0.1854851E-01	-0.1906893E-01	-0.1605556E-01
0.1642080E-00	0.1587549E-00	0.1476189E-00	0.1366059E-00	0.1256730E-00	0.1142698E-00	0.1030873E-00
0.9240683E-01	0.8101501E-01	0.7032595E-01	0.5962140E-01	0.4921761E-01	0.3869050E-01	0.2895603E-01
0.1860295E-01	0.9208155E-02	-0.1429607E-03	-0.8912072E-02	-0.1627351E-01	-0.2219522E-01	-0.2650041E-01
-0.2977025E-01	-0.3252029E-01	0.2151555E-00	-0.3090294E-01	-0.3507539E-01	-0.3681618E-01	-0.3831981E-01
-0.1059725E-04	-0.	0.2679018E-02	-0.5675871E-01	-0.	-0.	-0.
-0.	-0.9776195E-01	-0.1011308E-00	-0.8835864E-02	0.4236192E-01	-0.	0.7262677E-01
0.9192928E-01	0.8418025E-01	0.4864386E-01	0.3291600E-02	-0.2745806E-01	-0.3110795E-01	-0.2224629E-01
-0.1497197E-01	-0.1087026E-01	-0.4160041E-01	-0.2381748E-01	-0.1342738E-14	-0.2417552E-01	-0.2439652E-01
-0.3466245E-01	-0.4103802E-01	-0.4328391E-01	-0.3513356E-01	-0.2492291E-01	-0.2010286E-01	-0.2430140E-01
0.5067179E-01	0.5407878E-02	-0.6892213E-15	0.4350597E-02	-0.2663653E-01	-0.4695555E-01	-0.6050140E-01
-0.6734268E-01	-0.7151425E-01	-0.7105428E-01	-0.6517532E-01	-0.5592036E-01	0.5349666E-01	0.3132590E-01
-0.6174060E-15	0.3168202E-01	0.3005574E-01	0.4002855E-01	0.4671111E-01	0.4907925E-01	0.4033099E-01
0.2885481E-01	0.2254700E-01	0.2537584E-01	-0.4002635E-01	-0.6525506E-03	-0.1158253E-14	0.3365615E-03
0.2808318E-01	0.4753915E-01	0.6135298E-01	0.6861881E-01	0.7298351E-01	0.7233921E-01	0.6602653E-01
0.5641484E-01	-0.6498092E-01	-0.2754592E-01	0.6693305E-15	-0.2664912E-01	-0.1669477E-03	0.1346291E-01
0.2077161E-01	0.2158395E-01	0.2606812E-01	0.3020115E-01	0.2951304E-01	0.2153407E-01	0.2144187E-01
0.3418286E-01	0.6676073E-15	0.3421722E-01	0.3887251E-01	0.3467655E-01	0.2491209E-01	0.1069722E-01
-0.2987573E-02	-0.1672991E-01	-0.3141385E-01	-0.4756813E-01	0.7404487E-01	0.3231518E-01	0.3345709E-15
0.3121006E-01	0.7370505E-03	-0.1599143E-01	-0.2492894E-01	-0.2607495E-01	-0.3007186E-01	-0.3318443E-01
-0.3116152E-01	-0.2181665E-01	-0.1555642E-01	-0.4286072E-01	-0.1659247E-15	-0.4276431E-01	-0.4917455E-01
-0.4168674E-01	-0.2776307E-01	-0.1083842E-01	0.4030121E-02	0.1791033E-01	0.3229588E-01	0.4827693E-01
-0.1211200E-04	-0.6707823E-04	-0.2501594E-03	-0.2501598E-03	0.1335748E-02	0.1809624E-03	0.5858501E-02
0.6092734E-02	-0.3772652E-02	-0.3239477E-02	-0.5623247E-02	-0.5891195E-02	0.3468987E-02	0.2827697E-02
-0.5837993E-02	0.1694794E-02	0.2112684E-01	0.5311483E-02	0.5391198E-02	-0.1669947E-02	-0.2184789E-01
-0.5641192E-02	0.5552004E-04	-0.1778821E-03	-0.5179636E-04	-0.9200714E-06	-0.4211169E-02	0.6054293E-01
-0.5609613E-02	0.4397586E-04	0.1472595E-03	-0.1861583E-03	-0.1501856E-01	-0.1124642E-01	-0.7182368E-01
0.1609176E-03	0.3705725E-04	0.1478783E-03	0.4194262E-02	-0.6005794E-01	0.5300976E-02	-0.5023366E-04
-0.1544186E-03	0.1809032E-03	0.1467034E-01	0.1157595E-01	0.7156772E-01	-0.1648542E-03	-0.3913056E-04
-0.1444092E-03	0.6775982E-01	-0.1296008E-01	0.3411023E-02	0.8269929E-04	-0.1833232E-03	0.6516825E-03
-0.2732074E-01	-0.6133749E-01	0.3004507E-02	0.1861767E-04	-0.8677175E-04	0.9663973E-04	-0.6733476E-01
0.1281031E-01	-0.3197774E-02	-0.8417723E-04	0.1811504E-03	-0.6585169E-03	0.2714927E-01	0.6115185E-01
-0.2798896E-02	-0.1723335E-04	0.8338462E-04	-0.1022582E-03			

SA-5 RUN #2 MODE 8 XN = 3.144373

0.1842497E-00	0.1817793E-00	0.1768374E-00	0.1718987E-00	0.1669775E-00	0.1620727E-00	0.1571935E-00
0.1523333E-00	0.1474876E-00	0.1426735E-00	0.1379230E-00	0.1332426E-00	0.1286076E-00	0.1240310E-00
0.1195116E-00	0.1150670E-00	0.1107155E-00	0.1065083E-00	0.1026817E-00	0.9923929E-01	0.9611455E-01
0.9326154E-01	0.9056384E-01	0.1428113E-00	0.9211603E-01	0.8795406E-01	0.8544188E-01	0.8302272E-01
0.	0.	-0.9123874E-02	0.7714196E-01	0.	0.	0.
0.	-0.7285617E-01	-0.7557915E-01	-0.6799413E-01	-0.6455040E-01	0.	-0.6119992E-01
-0.5640964E-01	-0.4628664E-01	-0.3429481E-01	-0.1782342E-01	0.2963338E-02	0.2362767E-01	0.4276163E-01
0.5911584E-01	0.7721769E-01	-0.5410865E-01	-0.2930429E-01	0.	-0.2840386E-01	-0.6027500E-02
0.1476033E-01	0.3221205E-01	0.4549054E-01	0.5471302E-01	0.5984439E-01	0.6124377E-01	0.6003063E-01
0.3103448E-01	0.1645184E-01	0.	0.1589599E-01	0.2308395E-02	-0.1047034E-01	-0.2103059E-01
-0.2883128E-01	-0.3385082E-01	-0.3615219E-01	-0.3602012E-01	-0.3422020E-01	0.5346796E-01	0.2760007E-01
0.	0.2666058E-01	0.3429060E-02	-0.1798226E-01	-0.3572963E-01	-0.4894604E-01	-0.5778613E-01
-0.6225107E-01	-0.6274687E-01	-0.6048214E-01	-0.3098631E-01	-0.1581141E-01	0.	-0.1522151E-01
-0.1158921E-02	0.1196999E-01	0.2270953E-01	0.3049863E-01	0.3532840E-01	0.3728943E-01	0.3669852E-01
0.3435629E-01	-0.8424723E-01	-0.1016925E-00	-0.	-0.1020909E-00	-0.1135146E-00	-0.1174642E-00
-0.1114771E-00	-0.9558141E-01	-0.7030451E-01	-0.3719838E-01	0.1843225E-02	0.4432547E-01	-0.3120665E-01
-0.5176013E-01	-0.	-0.5238596E-01	-0.6877468E-01	-0.8012978E-01	-0.8379326E-01	-0.7933006E-01
-0.6698889E-01	-0.4787460E-01	-0.2348223E-01	0.4049050E-02	0.8567427E-01	0.1061701E-00	-0.
0.1066562E-00	0.1205605E-00	0.1263866E-00	0.1213857E-00	0.1055152E-00	0.7933966E-01	0.4450464E-01
0.3064733E-02	-0.4223038E-01	0.1498879E-01	0.5724243E-02	-0.	0.5406303E-02	-0.2579758E-02
-0.9706322E-02	-0.1547006E-01	-0.1954440E-01	-0.2196270E-01	-0.2267439E-01	-0.2185208E-01	-0.1999809E-01
-0.2748751E-01	-0.2711196E-01	-0.2635574E-01	-0.2560428E-01	-0.2484622E-01	-0.2411272E-01	-0.2337661E-01
-0.2262720E-01	-0.2190162E-01	-0.2116298E-01	-0.2045116E-01	-0.1974043E-01	-0.1904093E-01	-0.1833575E-01
-0.1766663E-01	-0.1697820E-01	-0.1631649E-01	-0.1569396E-01	-0.1510256E-01	-0.1456831E-01	-0.1407207E-01
-0.1360894E-01	-0.1316961E-01	-0.1685205E-01	-0.1342548E-01	-0.1274248E-01	-0.1231670E-01	-0.1191627E-01
0.2563183E-04	-0.	0.1186705E-02	-0.1112033E-01	-0.	-0.	-0.
-0.	0.9316035E-02	0.9910381E-02	0.9640196E-02	0.9745883E-02	-0.	0.9589924E-02
0.9082374E-02	0.7547722E-02	0.5654348E-02	0.3339631E-02	0.7878277E-03	-0.1664709E-02	-0.4103508E-02
-0.6576896E-02	-0.9201465E-02	0.3394387E-01	0.2125241E-01	-0.2358026E-14	0.2075629E-01	0.8785694E-02
-0.2778892E-02	-0.1279290E-01	-0.2078676E-01	-0.2670484E-01	-0.3057191E-01	-0.3265075E-01	-0.3367713E-01
0.5709436E-01	0.3581502E-01	0.5553866E-14	0.3501802E-01	0.1542657E-01	-0.3361108E-02	-0.1990025E-01
-0.3336531E-01	-0.4383323E-01	-0.5121160E-01	-0.5580515E-01	-0.5857467E-01	-0.3231392E-01	-0.2519591E-01
0.1464587E-13	-0.2486916E-01	-0.1730543E-01	-0.8900485E-02	-0.3667799E-03	0.7773196E-02	0.1522287E-01
0.2163288E-01	0.2676911E-01	0.3071134E-01	-0.5370306E-01	-0.3556689E-01	-0.4814333E-13	-0.3486578E-01
-0.1778639E-01	-0.8379832E-03	0.1475176E-01	0.2812928E-01	0.3922497E-01	0.4773465E-01	0.5365339E-01
0.5754998E-01	-0.1585543E-01	-0.1421667E-01	-0.4332288E-14	-0.1410030E-01	-0.1167806E-01	-0.8463317E-02
-0.4547811E-02	-0.2965147E-03	0.4193466E-02	0.8594432E-02	0.1265403E-01	0.1621446E-01	0.7438811E-01
0.7215598E-01	0.5649092E-14	0.7181937E-01	0.6550391E-01	0.5448260E-01	0.3910170E-01	0.2065780E-01
0.2790451E-03	-0.2044925E-01	-0.4001865E-01	-0.5740259E-01	0.2153212E-01	0.2073078E-01	0.3825372E-14
0.2065775E-01	0.1910853E-01	0.1649403E-01	0.1259860E-01	0.7659776E-02	0.1809302E-02	-0.4461138E-02
-0.1062103E-01	-0.1619202E-01	-0.7040141E-01	-0.6820525E-01	-0.5106226E-14	-0.6785287E-01	-0.6129269E-01
-0.5013597E-01	-0.3495557E-01	-0.1709955E-01	0.2377045E-02	0.2201051E-01	0.4044029E-01	0.5678776E-01
-0.1088292E-03	-0.1095695E-03	-0.1120924E-03	-0.1120924E-03	0.8554479E-04	0.7732862E-05	0.1240441E-01
0.1238813E-01	-0.7110090E-02	-0.7094158E-02	-0.1260911E-01	-0.1258901E-01	0.7379692E-02	0.7360036E-02
0.6414875E-02	0.1043387E-01	0.2090887E-02	0.2967166E-02	-0.6699770E-02	-0.1080173E-01	-0.1867575E-02
-0.2551858E-02	0.2455846E-04	-0.2073766E-04	-0.1336736E-03	-0.5880883E-05	0.1086933E-01	0.8582476E-01
-0.1040624E-01	-0.2921402E-05	0.1980976E-05	-0.1500548E-03	-0.8104007E-02	-0.1088427E-01	-0.8533130E-01
-0.1990720E-05	-0.1197844E-03	0.6416783E-05	-0.1015261E-01	-0.8527710E-01	0.9954622E-02	-0.9467785E-05
0.1384534E-04	0.1460465E-03	0.8536866E-02	0.1152704E-01	0.8459602E-01	-0.1002193E-04	0.1166659E-03
-0.1239452E-04	0.8211646E-01	-0.1047504E-01	0.6368997E-02	-0.3136784E-04	-0.1334776E-03	-0.1373023E-04
-0.1256365E-01	-0.8432648E-01	-0.1337695E-02	-0.1634341E-03	0.6042653E-04	-0.6597116E-04	-0.8262023E-01
0.9752792E-02	-0.6377230E-02	0.2367695E-04	0.1356058E-03	0.2977728E-05	0.1238923E-01	0.8420380E-01
0.1093695E-02	0.1773120E-03	-0.5227713E-04	0.5166206E-04			

0.1796032E-00	0.1771465E-00	0.1722932E-00	0.1675355E-00	0.1627454E-00	0.1580691E-00	0.1533606E-00
0.1486055E-00	0.1439106E-00	0.1392689E-00	0.1346319E-00	0.1302114E-00	0.1257764E-00	0.1212789E-00
0.1169663E-00	0.1126854E-00	0.1084759E-00	0.1044397E-00	0.1006911E-00	0.9737461E-01	0.9431977E-01
0.9146161E-01	0.8876145E-01	0.1400571E-00	0.9032686E-01	0.8618629E-01	0.8362205E-01	0.8112891E-01
0.	0.	-0.8864647E-02	0.7524357E-01	0.	0.	0.
0.	-0.7402374E-01	-0.7661087E-01	-0.6933796E-01	-0.6608282E-01	0.	-0.6290252E-01
-0.5834466E-01	-0.4868644E-01	-0.3718475E-01	-0.2123483E-01	-0.8099724E-03	0.1981087E-01	0.3907819E-01
0.5565653E-01	0.7332073E-01	-0.4822057E-01	-0.2539353E-01	0.	-0.2436087E-01	-0.1145040E-02
0.2149946E-01	0.3988025E-01	0.5327142E-01	0.6128089E-01	0.6439408E-01	0.6330119E-01	0.5954614E-01
0.4502149E-01	0.2089601E-01	0.	0.2042239E-01	0.5680372E-02	-0.4472587E-02	-0.1318054E-01
-0.1958709E-01	-0.2516308E-01	-0.2882466E-01	-0.3027836E-01	-0.2980742E-01	0.4800971E-01	0.2377940E-01
0.	0.2278053E-01	-0.1415575E-02	-0.2465024E-01	-0.4310306E-01	-0.5643968E-01	-0.6406281E-01
-0.6654249E-01	-0.6469399E-01	-0.6002973E-01	-0.4255994E-01	-0.1191088E-01	0.	-0.1152168E-01
0.8386902E-02	0.2226065E-01	0.3259354E-01	0.3871098E-01	0.4230277E-01	0.4238501E-01	0.3887841E-01
0.3271299E-01	-0.9855445E-01	-0.1266546E-00	-0.	-0.1275810E-00	-0.1503706E-00	-0.1643872E-00
-0.1637738E-00	-0.1482130E-00	-0.1178321E-00	-0.7540343E-01	-0.2393584E-01	0.3264409E-01	-0.1707222E-01
-0.4912301E-01	-0.	-0.4979073E-01	-0.6915194E-01	-0.7908170E-01	-0.8160529E-01	-0.7623442E-01
-0.6471107E-01	-0.4665197E-01	-0.2272378E-01	0.5285383E-02	0.8326257E-01	0.7985168E-01	-0.
0.7985455E-01	0.7734613E-01	0.7256449E-01	0.6246265E-01	0.4746577E-01	0.2732630E-01	0.3752527E-02
-0.2190489E-01	-0.4838007E-01	0.3255677E-02	0.6575165E-02	-0.	0.6270611E-02	0.2580037E-02
-0.4506112E-02	-0.1054531E-01	-0.1542600E-01	-0.1756205E-01	-0.1847841E-01	-0.1892642E-01	-0.1951442E-01
-0.2619482E-01	-0.2590826E-01	-0.2522282E-01	-0.2458395E-01	-0.2395143E-01	-0.2311791E-01	-0.2233555E-01
-0.2172937E-01	-0.2081830E-01	-0.2013566E-01	-0.1941049E-01	-0.1868810E-01	-0.1785741E-01	-0.1729277E-01
-0.1640692E-01	-0.1580186E-01	-0.1510809E-01	-0.1450580E-01	-0.1399726E-01	-0.1361714E-01	-0.1353087E-01
-0.1355073E-01	-0.1360368E-01	-0.9879685E-01	-0.1360217E-01	-0.1362629E-01	-0.1388117E-01	-0.1413810E-01
0.1829324E-05	-0.	0.1118115E-02	-0.1000712E-01	-0.	-0.	-0.
-0.	0.3842411E-01	0.306157[illegible]E-01	0.1813433E-01	0.5130555E-02	-0.	-0.2028204E-02
-0.6118611E-02	-0.4267130E-02	0.9141959E-03	0.3912456E-02	0.1398610E-02	-0.3616911E-02	-0.7265891E-02
-0.6709890E-02	-0.8695673E-02	0.4106995E-01	0.2359931E-01	0.3334692E-14	0.2319907E-01	0.1147635E-01
0.2270918E-02	-0.6534672E-02	-0.1335604E-01	-0.1979576E-01	-0.2490854E-01	-0.2843409E-01	-0.2960537E-01
0.5087071E-01	0.3502887E-01	-0.8442704E-14	0.3426597E-01	0.1702974E-01	-0.9473061E-03	-0.1669171E-01
-0.2983651E-01	-0.3979331E-01	-0.4691261E-01	-0.5169522E-01	-0.5551224E-01	-0.4457791E-01	-0.2498492E-01
-0.2224561E-13	-0.2462952E-01	-0.1236364E-01	-0.3396964E-02	0.5117542E-02	0.1193342E-01	0.1869566E-01
0.2427754E-01	0.2821883E-01	0.2968629E-01	-0.5437242E-01	-0.3663804E-01	0.7207374E-13	-0.3589495E-01
-0.1819400E-01	-0.5639349E-03	0.1485123E-01	0.2804258E-01	0.3835275E-01	0.4598265E-01	0.5126907E-01
0.5546380E-01	-0.1083033E-01	-0.1655176E-01	0.6931064E-14	-0.1638962E-01	-0.1603942E-01	-0.1140138E-01
-0.5902700E-02	0.4014200E-03	0.5272339E-02	0.9376505E-02	0.1318901E-01	0.1774268E-01	0.7452330E-01
0.6860591E-01	-0.8681722E-14	0.6820647E-01	0.5960974E-01	0.4765470E-01	0.3204507E-01	0.1461762E-01
-0.4289795E-02	-0.2290789E-01	-0.3991636E-01	-0.5436874E-01	0.9130230E-02	0.1724611E-01	-0.5659446E-14
0.1715189E-01	0.1839070E-01	0.1442022E-01	0.8881542E-02	0.2211174E-02	-0.3115344E-02	-0.7737709E-02
-0.1214193E-01	-0.1731041E-01	-0.7730131E-01	-0.6733540E-01	0.7924967E-14	-0.6705044E-01	-0.5895569E-01
-0.4826527E-01	-0.3326165E-01	-0.1568074E-01	0.3648797E-02	0.2264288E-01	0.3988850E-01	0.5444739E-01
-0.3405941E-03	-0.3309158E-03	-0.2972459E-03	-0.2972458E-03	-0.3975756E-04	0.4771666E-04	0.1119616E-01
0.1113354E-01	-0.7221385E-02	-0.7334672E-02	-0.1132125E-01	-0.1124068E-01	0.7493164E-02	0.7619815E-02
0.7897668E-02	0.1047862E-01	-0.3387486E-02	0.1601317E-02	-0.7818026E-02	-0.1037130E-01	0.3479152E-02
-0.1536671E-02	0.7886429E-04	0.1891955E-04	-0.1252164E-03	0.5560599E-06	0.1255383E-01	0.8197077E-01
-0.7257244E-02	-0.7245534E-05	-0.2565255E-04	-0.1176176E-03	-0.5389872E-02	-0.8204646E-02	-0.7994520E-01
-0.3092165E-04	-0.1299866E-03	0.3017703E-04	-0.1254554E-01	-0.8209521E-01	0.7373972E-02	0.8766624E-05
0.2793669E-04	0.1205586E-03	0.5744562E-02	0.8197422E-02	0.8022229E-01	0.3145673E-04	0.1347041E-03
-0.3289451E-04	0.7784091E-01	-0.6262083E-02	0.6314825E-02	0.3158352E-04	-0.1347456E-03	-0.6316421E-04
-0.8366941E-02	-0.8039312E-01	-0.1173135E-02	-0.1896850E-03	0.9093244E-04	-0.6333925E-04	-0.7798547E-01
0.6343727E-02	-0.6281409E-02	-0.2738259E-04	0.1348612E-03	0.6696691E-04	0.8161085E-02	0.8041434E-01
0.1260695E-02	0.1876863E-03	-0.9094740E-04	0.6211747E-04			

SA-5 RUN #2 MODE 10 XN = 3.018287

0.1537894E-01	0.1514323E-01	0.1463186E-01	0.1406016E-01	0.1352269E-01	0.1292315E-01	0.1236404E-01
0.1184988E-01	0.1130655E-01	0.1075292E-01	0.1024364E-01	0.9644957E-02	0.9090710E-02	0.8620699E-02
0.8072638E-02	0.7559946E-02	0.7070750E-02	0.6576139E-02	0.6180009E-02	0.5790102E-02	0.5467920E-02
0.5221876E-02	0.4989441E-02	0.9649281E-02	0.5115370E-02	0.4741837E-02	0.4560293E-02	0.4402565E-02
-0.	-0.	-0.5204558E-03	0.3869231E-02	-0.	-0.	-0.
-0.	-0.5050400E-02	-0.4912478E-02	-0.5025550E-02	-0.4894942E-02	-0.	-0.4775738E-02
-0.4596957E-02	-0.4146759E-02	-0.3486401E-02	-0.2425278E-02	-0.9385681E-03	0.6114323E-03	0.2028856E-02
0.3152607E-02	0.4019280E-02	-0.5369426E-02	0.1189379E-02	-0.	0.1284737E-02	0.5284313E-02
0.7857592E-02	0.9645022E-02	0.1033418E-01	0.1020445E-01	0.9036436E-02	0.6855232E-02	0.3848400E-02
-0.4549227E-02	0.1312336E-02	-0.	0.1264036E-02	0.2007374E-02	0.6809798E-03	-0.4769596E-04
-0.7635233E-03	-0.8331933E-03	-0.1099746E-02	-0.1899942E-02	-0.3337100E-02	0.6713835E-02	0.5272462E-02
-0.	0.5281577E-02	0.5300326E-02	0.5600674E-02	0.5079379E-02	0.4273414E-02	0.2842827E-02
0.1202029E-02	-0.4012723E-03	-0.1857279E-02	0.4603004E-02	-0.4150085E-03	-0.	-0.1401084E-03
-0.1241366E-03	0.1829208E-02	0.3008711E-02	0.3819889E-02	0.3602717E-02	0.3308982E-02	0.3366691E-02
0.3838085E-02	-0.5154089E-01	-0.1466948E-00	0.	-0.1495822E-00	-0.2253399E-00	-0.2816042E-00
-0.3096358E-00	-0.3071672E-00	-0.2754423E-00	-0.2173640E-00	-0.1379946E-00	-0.4543298E-01	-0.6073856E-02
0.5236800E-02	0.	0.5399868E-02	0.1069660E-01	0.1269136E-01	0.1381493E-01	0.1367688E-01
0.1306388E-01	0.1115786E-01	0.7739675E-02	0.3041927E-02	-0.4644214E-01	-0.1331270E-00	0.
-0.1360704E-00	-0.2090264E-00	-0.2658088E-00	-0.2953737E-00	-0.2955542E-00	-0.2667827E-00	-0.2126241E-00
-0.1382381E-00	-0.5158824E-01	0.1010677E-01	0.7993779E-02	0.	0.8169209E-02	0.1018112E-01
0.1358537E-01	0.1539135E-01	0.1581182E-01	0.1402216E-01	0.1120492E-01	0.7940869E-02	0.4701598E-02
-0.5486542E-02	-0.5352291E-02	-0.5154889E-02	-0.4929202E-02	-0.4695384E-02	-0.4610000E-02	-0.4489631E-02
-0.4244022E-02	-0.4216296E-02	-0.4030753E-02	-0.3892299E-02	-0.3757397E-02	-0.3704405E-02	-0.3474026E-02
-0.3483247E-02	-0.3298829E-02	-0.3195506E-02	-0.3065061E-02	-0.2916548E-02	-0.2744315E-02	-0.2421646E-02
-0.2068095E-02	-0.1718276E-02	0.4775873E-01	-0.1901504E-02	-0.1403220E-02	-0.9417385E-03	-0.5025031E-03
-0.1241923E-03	0.	0.2342241E-03	-0.2587976E-02	0.	0.	0.
0.	-0.1608055E-01	-0.1002322E-01	-0.3407413E-02	0.4703203E-02	0.	0.8901434E-02
0.1082540E-01	0.8105115E-02	0.3221094E-02	-0.5076793E-03	-0.1022537E-02	0.6689440E-04	0.4785548E-03
-0.1340415E-02	-0.1935467E-02	-0.3820296E-02	0.1135785E-01	-0.8417997E-14	0.1167048E-01	0.2119942E-01
0.2667026E-01	0.2901813E-01	0.2751782E-01	0.2374483E-01	0.1797305E-01	0.1110335E-01	0.3702931E-02
-0.1734912E-02	-0.2760843E-03	0.2058406E-13	-0.1393734E-03	0.2406764E-02	0.4936388E-02	0.6050835E-02
0.6051694E-02	0.4714700E-02	0.2618929E-02	0.3572058E-03	-0.1103798E-02	0.1782390E-03	0.7091197E-02
0.5436478E-13	0.7542020E-02	0.1660913E-01	0.2516412E-01	0.2971678E-01	0.3085937E-01	0.2804024E-01
0.2263215E-01	0.1598447E-01	0.1035744E-01	-0.1177658E-01	-0.4914202E-02	-0.1780124E-12	-0.4720908E-02
0.4512254E-03	0.4421933E-02	0.7135512E-02	0.8057004E-02	0.7885781E-02	0.6835851E-02	0.5421241E-02
0.4037558E-02	-0.1380791E-01	-0.1031512E-01	-0.1635572E-13	-0.1040129E-01	-0.1022117E-01	-0.1139122E-01
-0.1141286E-01	-0.1066248E-01	-0.8196923E-02	-0.5027359E-02	-0.1926651E-02	0.1115849E-03	-0.5838551E-02
-0.5568114E-02	0.2095201E-13	-0.5678574E-02	-0.7139577E-02	-0.9177936E-02	-0.1036294E-01	-0.1061694E-01
-0.9488038E-02	-0.7472930E-02	-0.5115850E-02	-0.3193165E-02	-0.4329668E-02	-0.1087490E-01	0.1402702E-13
-0.1093914E-01	-0.1416137E-01	-0.1475935E-01	-0.1438781E-01	-0.1251848E-01	-0.1032064E-01	-0.7272754E-02
-0.3407862E-02	0.1253846E-02	-0.1255148E-01	-0.1673523E-01	-0.1883748E-13	-0.1660958E-01	-0.1603848E-01
-0.1358821E-01	-0.1088197E-01	-0.7812110E-02	-0.4701862E-02	-0.1374788E-02	0.2013833E-02	0.5442470E-02
-0.5079391E-03	-0.5088818E-03	-0.5132864E-03	-0.5132865E-03	0.4190407E-03	0.7894980E-04	0.4820245E-03
0.5212412E-03	-0.4755431E-03	-0.3840656E-03	0.5541122E-04	0.2267105E-05	0.2917879E-03	0.1892534E-03
-0.2196221E-04	0.1471948E-02	0.2205259E-02	-0.7080562E-03	0.1279801E-02	0.8651291E-03	-0.3755367E-02
-0.1386541E-02	0.1557365E-03	-0.2856987E-04	-0.4183352E-05	0.2660690E-04	-0.3660377E-02	0.2680434E-02
-0.1882395E-02	0.3710730E-04	-0.1887372E-04	0.1029545E-04	-0.2556861E-02	-0.4966821E-02	-0.2446575E-02
0.4643645E-04	0.3871644E-04	0.3330520E-05	-0.1163600E-03	-0.5673690E-02	0.4637857E-02	0.2090185E-04
-0.4003893E-04	0.2597635E-04	0.2163339E-02	0.1946402E-02	0.7305458E-02	0.5251898E-05	0.1599609E-04
0.1380684E-04	0.5131054E-02	-0.1943399E-02	0.2104887E-03	-0.6640035E-06	-0.7088546E-05	0.6049589E-04
-0.3783277E-02	-0.4092375E-02	0.5718437E-03	-0.4706686E-04	-0.3186674E-04	0.3920545E-04	-0.3244922E-02
0.5730118E-02	-0.3308643E-03	0.6348867E-04	-0.1307652E-05	-0.3024675E-05	0.4742472E-02	0.4333470E-02
0.7032360E-03	-0.3634154E-04	-0.3234962E-05	0.2609853E-04			

0.6622243E-01	0.6527712E-01	0.6338193E-01	0.6148298E-01	0.5959441E-01	0.5770904E-01	0.5583942E-01
0.5398271E-01	0.5212959E-01	0.5029165E-01	0.4848519E-01	0.4670329E-01	0.4494867E-01	0.4322479E-01
0.4152159E-01	0.3985529E-01	0.3823383E-01	0.3667554E-01	0.3529990E-01	0.3409892E-01	0.3304607E-01
0.3212263E-01	0.3126996E-01	0.6512719E-01	0.3175836E-01	0.3045674E-01	0.2969053E-01	0.2896827E-01
-0.	-0.	-0.2427880E-02	0.2739348E-01	-0.	-0.	-0.
-0.	-0.4111224E-01	-0.4043736E-01	-0.4160730E-01	-0.4167215E-01	-0.	-0.4167951E-01
-0.4155932E-01	-0.4077747E-01	-0.3901515E-01	-0.3537464E-01	-0.2899967E-01	-0.2072530E-01	-0.1128130E-01
-0.1011229E-02	0.1234135E-01	-0.4173027E-01	0.1083600E-02	-0.	0.2492175E-02	0.3839420E-01
0.6721257E-01	0.8516045E-01	0.9157412E-01	0.8699666E-01	0.7250180E-01	0.4968873E-01	0.2145872E-01
-0.3320650E-01	-0.3038336E-02	-0.	-0.2044765E-02	0.2321801E-01	0.4359063E-01	0.5648497E-01
0.6139445E-01	0.5867959E-01	0.4904049E-01	0.3356455E-01	0.1427481E-01	0.4175326E-01	-0.1043792E-02
-0.	-0.2453717E-02	-0.3634610E-01	-0.6716011E-01	-0.8511763E-01	-0.9152794E-01	-0.8695350E-01
-0.7246417E-01	-0.4965290E-01	-0.2142916E-01	0.3327869E-01	0.3064137E-02	-0.	0.2089280E-02
-0.2320158E-01	-0.4360393E-01	-0.5650708E-01	-0.6142111E-01	-0.5871492E-01	-0.4907985E-01	-0.3359840E-01
-0.1430806E-01	-0.5542509E-02	0.4047250E-02	0.	0.4372388E-02	0.1255427E-01	0.1924203E-01
0.2336905E-01	0.2465980E-01	0.2311760E-01	0.1902835E-01	0.1287409E-01	0.5447426E-02	-0.4623973E-01
0.1823229E-01	0.	0.2038172E-01	0.7475691E-01	0.1190236E-00	0.1466190E-00	0.1556944E-00
0.1463610E-00	0.1203174E-00	0.8064212E-01	0.3250391E-01	0.5664923E-02	-0.4194009E-02	0.
-0.4532470E-02	-0.1294833E-01	-0.1983578E-01	-0.2408077E-01	-0.2540232E-01	-0.2383112E-01	-0.1957474E-01
-0.1322085E-01	-0.5557193E-02	0.4639138E-01	-0.1794245E-01	0.	-0.2008508E-01	-0.7436536E-01
-0.1185687E-00	-0.1461439E-00	-0.1552363E-00	-0.1459657E-00	-0.1200071E-00	-0.8044953E-01	-0.3244991E-01
0.1189788E-00	0.1171191E-00	0.1134005E-00	0.1096879E-00	0.1059910E-00	0.1022996E-00	0.9863209E-01
0.9498707E-01	0.9134121E-01	0.8774230E-01	0.8417093E-01	0.8067220E-01	0.7720667E-01	0.7379317E-01
0.7041459E-01	0.6711242E-01	0.6387872E-01	0.6075824E-01	0.5795399E-01	0.5546496E-01	0.5323797E-01
0.5123259E-01	0.4935226E-01	0.4756912E-01	0.5043319E-01	0.4754390E-01	0.4581721E-01	0.4416133E-01
-0.1123100E-04	0.	-0.3242353E-02	0.4017688E-01	0.	0.	0.
0.	-0.7121606E-01	-0.6952900E-01	-0.7161760E-01	-0.7142286E-01	0.	-0.7127851E-01
-0.7099842E-01	-0.6973155E-01	-0.6681685E-01	-0.6057591E-01	-0.4952480E-01	-0.3532242E-01	-0.1942824E-01
-0.2620205E-02	0.1855197E-01	-0.5553256E-01	-0.6661190E-01	0.2047378E-14	-0.6682714E-01	-0.7361713E-01
-0.7498307E-01	-0.6997029E-01	-0.5943243E-01	-0.4495868E-01	-0.2856623E-01	-0.1280759E-01	-0.4342090E-03
0.7541179E-01	0.9809989E-01	-0.7437888E-14	0.9862306E-01	0.1136905E-00	0.1193950E-00	0.1139500E-00
0.9859067E-01	0.7596810E-01	0.4944716E-01	0.2328813E-01	0.2208319E-02	0.5463534E-01	0.6724932E-01
-0.1893059E-13	0.6752919E-01	0.7559218E-01	0.7793047E-01	0.7342173E-01	0.6288682E-01	0.4802243E-01
0.3795096E-01	0.1436281E-01	0.1232762E-02	-0.7588169E-01	-0.9680395E-01	0.6023542E-13	-0.9727203E-01
-0.1108753E-00	-0.1155242E-00	-0.1095793E-00	-0.9427271E-01	-0.7219594E-01	-0.4655803E-01	-0.2143224E-01
-0.1307152E-02	-0.8123679E-01	-0.8338569E-01	0.6003008E-14	-0.8344708E-01	-0.8495911E-01	-0.8356526E-01
-0.7762986E-01	-0.6693737E-01	-0.5219806E-01	-0.3491484E-01	-0.1711964E-01	-0.1001343E-02	0.9911233E-02
0.9736936E-02	-0.6724479E-14	0.9725529E-02	0.9450224E-02	0.8850155E-02	0.7849092E-02	0.6442652E-02
0.4736466E-02	0.2871813E-02	0.1043003E-02	-0.5597231E-03	0.7958953E-01	0.8155273E-01	-0.4557544E-14
0.8161426E-01	0.8290934E-01	0.8139894E-01	0.7552551E-01	0.6506845E-01	0.5074053E-01	0.3398812E-01
0.1677404E-01	0.1200098E-02	-0.1178835E-01	-0.1231430E-01	0.6297832E-14	-0.1230493E-01	-0.1247097E-01
-0.1210366E-01	-0.1106055E-01	-0.9315822E-02	-0.7033944E-02	-0.4416553E-02	-0.1759307E-02	0.6127877E-03
0.6229337E-04	0.6205191E-04	0.6119690E-04	0.6119691E-04	-0.3586860E-04	-0.1233079E-04	0.1465062E-01
0.1462446E-01	0.1034825E-01	0.1033276E-01	-0.1471966E-01	-0.1468843E-01	-0.1031380E-01	-0.1029499E-01
0.2163647E-02	0.3227608E-02	0.1004986E-01	0.1647574E-01	-0.2199945E-02	-0.3277690E-02	-0.9993595E-02
-0.1644528E-01	-0.8665816E-05	0.1599208E-03	-0.1040203E-03	0.2495146E-05	0.1742757E-01	0.1791244E-01
0.2690274E-01	0.5730540E-05	0.1582520E-03	-0.9546822E-04	0.4905871E-02	0.2736460E-01	-0.1855975E-01
0.4880704E-05	-0.1265380E-03	-0.1718494E-03	-0.1769643E-01	-0.1819020E-01	-0.2659390E-01	-0.3958463E-06
-0.1594978E-03	0.9851037E-04	-0.5143222E-02	-0.2762599E-01	0.1884363E-01	0.7744885E-07	0.1244544E-03
0.1734796E-03	0.1719222E-01	0.2624015E-01	0.4252669E-02	0.1930998E-03	-0.1217022E-03	0.3274684E-04
0.2534344E-01	-0.1701751E-01	0.7578787E-02	-0.1157122E-03	-0.1724137E-03	-0.6948404E-05	-0.1709959E-01
-0.2605014E-01	-0.4221431E-02	-0.1940011E-03	0.1195102E-03	-0.2718211E-04	-0.2513906E-01	0.1719297E-01
-0.7538380E-02	0.1181311E-03	0.1700675E-03	0.1250737E-04			

SA-5 RUN #2 MODE 12 XN = 2 409637

0.5085727E-02	0.5036576E-02	0.4922662E-02	0.4786250E-02	0.4664318E-02	0.4520163E-02	0.4393568E-02
0.4285270E-02	0.4167160E-02	0.4046215E-02	0.3944049E-02	0.3809555E-02	0.3692906E-02	0.3609596E-02
0.3497471E-02	0.3400190E-02	0.3313073E-02	0.3225757E-02	0.3179329E-02	0.3137431E-02	0.3122338E-02
0.3136262E-02	0.3154786E-02	0.6123418E-02	0.3140714E-02	0.3166657E-02	0.3202840E-02	0.3246505E-02
-0.	-0.	-0.3363723E-03	0.3366838E-02	-0.	-0.	-0.
-0.	-0.2176075E-02	-0.2272439E-02	-0.2061145E-02	-0.1967075E-02	-0.	-0.1883338E-02
-0.1770314E-02	-0.1535575E-02	-0.1243224E-02	-0.8078162E-03	-0.2064949E-03	0.4460045E-03	0.1103789E-02
0.1733805E-02	0.2561083E-02	-0.2384355E-01	-0.6909287E-03	-0.	0.1800680E-04	0.1872027E-01
0.3319229E-01	0.4203680E-01	0.4509557E-01	0.4300987E-01	0.3620322E-01	0.2531381E-01	0.1163249E-01
-0.5504655E-01	-0.5727270E-02	-0.	-0.4203583E-02	0.3534969E-01	0.6574194E-01	0.8422393E-01
0.9052180E-01	0.8614166E-01	0.7196669E-01	0.4907568E-01	0.2035317E-01	0.2372501E-01	0.5890113E-03
-0.	-0.1388038E-03	-0.1884160E-01	-0.3333476E-01	-0.4223997E-01	-0.4529065E-01	-0.4318955E-01
-0.3634841E-01	-0.2538761E-01	-0.1163366E-01	0.5509729E-01	0.5731933E-02	-0.	0.4281863E-02
-0.3530885E-01	-0.6573701E-01	-0.8420589E-01	-0.9050285E-01	-0.8615160E-01	-0.7193811E-01	-0.4909774E-01
-0.2038574E-01	0.1693484E-01	-0.1137011E-01	0.	-0.1225520E-01	-0.3525247E-01	-0.5312775E-01
-0.6358171E-01	-0.6608310E-01	-0.6115924E-01	-0.4948016E-01	-0.3222383E-01	-0.1141188E-01	-0.4938235E-01
0.1517131E-01	0.	0.1723071E-01	0.6991837E-01	0.1112666E-00	0.1362545E-00	0.1436651E-00
0.1346973E-00	0.1107564E-00	0.7433049E-01	0.2987964E-01	-0.1707126E-01	0.1164483E-01	0.
0.1252601E-01	0.3578947E-01	0.5377313E-01	0.6423929E-01	0.6666382E-01	0.6162543E-01	0.4982037E-01
0.3243635E-01	0.1149487E-01	0.4896397E-01	-0.1532988E-01	0.	-0.1736593E-01	-0.6991234E-01
-0.1112539E-00	-0.1362828E-00	-0.1437424E-00	-0.1348263E-00	-0.1108826E-00	-0.7442056E-01	-0.2992396E-01
0.1552049E-00	0.1524643E-00	0.1469641E-00	0.1414825E-00	0.1360235E-00	0.1305415E-00	0.1251045E-00
0.1197297E-00	0.1143051E-00	0.1089873E-00	0.1037093E-00	0.9854101E-01	0.9340532E-01	0.8839196E-01
0.8338180E-01	0.7853134E-01	0.7377325E-01	0.6920648E-01	0.6513188E-01	0.6155881E-01	0.5843290E-01
0.5565874E-01	0.5307951E-01	0.1345921E-00	0.5456631E-01	0.5060357E-01	0.4828802E-01	0.4608173E-01
0.1358494E-05	0.	-0.3422976E-02	0.3963993E-01	0.	0.	0.
0.	-0.8941384E-01	-0.8813053E-01	-0.8275374E-01	-0.7851126E-01	0.	-0.7594409E-01
-0.7406071E-01	-0.7316641E-01	-0.7267415E-01	-0.6926423E-01	-0.5921651E-01	-0.4328511E-01	-0.2432041E-01
-0.4383071E-02	0.2008706E-01	-0.8744904E-01	-0.1043073E-00	-0.1017694E-14	-0.1047034E-00	-0.1160794E-00
-0.1196242E-00	-0.1127020E-00	-0.9655740E-01	-0.7321460E-01	-0.4656306E-01	-0.2127195E-01	-0.1988735E-02
0.3999107E-01	0.4766408E-01	-0.4982583E-15	0.4784932E-01	0.5301611E-01	0.5454831E-01	0.5125369E-01
0.4367370E-01	0.3276065E-01	0.2029370E-01	0.8397526E-02	-0.8188266E-03	0.8859017E-01	0.1052073E-00
-0.4421482E-15	0.1056263E-00	0.1169375E-00	0.1205235E-00	0.1136520E-00	0.9747490E-01	0.7400135E-01
0.4713977E-01	0.2159997E-01	0.2102419E-02	-0.3848226E-01	-0.4624792E-01	-0.8764074E-15	-0.4642887E-01
-0.5154154E-01	-0.5298036E-01	-0.4963797E-01	-0.4214129E-01	-0.3146534E-01	-0.1935038E-01	-0.7847130E-02
0.1015939E-02	-0.7943494E-01	-0.7863752E-01	0.5002456E-15	-0.7863103E-01	-0.7804339E-01	-0.7582090E-01
-0.6998898E-01	-0.6031741E-01	-0.4663101E-01	-0.3061811E-01	-0.1452755E-01	-0.5679460E-03	-0.3031263E-01
-0.3052501E-01	0.5021418E-15	-0.3055716E-01	-0.3097766E-01	-0.3080465E-01	-0.2911954E-01	-0.2575493E-01
-0.2061845E-01	-0.1438692E-01	-0.7999949E-02	-0.2406318E-02	0.8048729E-01	0.7929603E-01	0.3146957E-15
0.7927284E-01	0.7829820E-01	0.7579507E-01	0.6981247E-01	0.6009052E-01	0.4642707E-01	0.3048029E-01
0.1447256E-01	0.5915698E-03	0.3061586E-01	0.2894432E-01	-0.9040046E-16	0.2898804E-01	0.2880305E-01
0.2861497E-01	0.2718464E-01	0.2415795E-01	0.1936552E-01	0.1349091E-01	0.7479142E-02	0.2243951E-02
0.7308490E-04	0.6808325E-04	0.5143037E-04	0.5143035E-04	0.6760156E-04	-0.3123611E-06	0.7078842E-02
0.7086537E-02	0.1563764E-01	0.1565387E-01	-0.7175647E-02	-0.7183496E-02	-0.1558905E-01	-0.1560889E-01
-0.3704565E-02	-0.5542395E-02	0.1051507E-01	0.1514756E-01	0.3635684E-02	0.5488037E-02	-0.1051826E-01
-0.1514444E-01	-0.8210023E-05	0.1671743E-05	-0.6839761E-05	-0.9240730E-07	0.1098971E-01	0.2654088E-02
0.3033801E-01	0.4844611E-05	0.1989527E-03	-0.4320404E-05	0.1200594E-01	0.3033279E-01	-0.4346975E-02
0.1607843E-04	-0.1716010E-04	-0.1781633E-05	-0.1112089E-01	-0.2619593E-02	-0.3039509E-01	-0.5147505E-05
-0.1998682E-03	0.5612267E-05	-0.1206001E-01	-0.3026837E-01	0.4289552E-02	-0.1668183E-04	0.1580530E-04
0.1773890E-03	0.3755194E-02	0.2856843E-01	-0.2621041E-04	0.2292872E-03	-0.3093969E-04	0.8537226E-04
0.2654328E-01	-0.2546039E-02	0.8593426E-02	0.1839810E-06	-0.2055990E-03	0.1362011E-04	-0.3757123E-02
-0.2858663E-01	0.3414961E-04	-0.2290715E-03	0.2987555E-04	-0.8566180E-04	-0.2644858E-01	0.2515388E-02
-0.8582168E-02	-0.1083022E-05	0.2048961E-03	-0.1454202E-04			

0.1047252E-00	0.1031122E-00	0.9968436E-01	0.9665696E-01	0.9344199E-01	0.9023872E-01	0.8705562E-01
0.8388824E-01	0.8072897E-01	0.7759559E-01	0.7450763E-01	0.7146854E-01	0.6846865E-01	0.6550862E-01
0.6259046E-01	0.5972751E-01	0.5693435E-01	0.5424303E-01	0.5183540E-01	0.4970875E-01	0.4781366E-01
0.4611927E-01	0.4453794E-01	0.9425705E-01	0.4544611E-01	0.4302226E-01	0.4157516E-01	0.4019686E-01
-0.	-0.	-0.3251984E-02	0.3700230E-01	-0.	-0.	-0.
-0.	-0.6384088E-01	-0.6235829E-01	-0.6502764E-01	-0.6537438E-01	-0.	-0.6560789E-01
-0.6570889E-01	-0.6500688E-01	-0.6275471E-01	-0.5762323E-01	-0.4821618E-01	-0.3572861E-01	-0.2134130E-01
-0.5606365E-02	0.1464862E-01	-0.2696111E-01	0.1563191E-02	-0.	0.2492049E-02	0.2623102E-01
0.4510839E-01	0.5668557E-01	0.6051577E-01	0.5700473E-01	0.4686498E-01	0.3117007E-01	0.1185910E-01
0.4225440E-01	0.3507231E-02	-0.	0.2193102E-02	-0.3088203E-01	-0.5777289E-01	-0.7460477E-01
-0.8080371E-01	-0.7672743E-01	-0.6347041E-01	-0.4256052E-01	-0.1671645E-01	0.2692607E-01	-0.1359141E-02
-0.	-0.2277928E-02	-0.2583640E-01	-0.4458584E-01	-0.5610780E-01	-0.5994112E-01	-0.5649796E-01
-0.4648079E-01	-0.3095014E-01	-0.1183431E-01	-0.4220476E-01	-0.3561696E-02	-0.	-0.2240375E-02
0.3075835E-01	0.5760243E-01	0.7441308E-01	0.8062010E-01	0.7657242E-01	0.6336539E-01	0.4252427E-01
0.1675491E-01	-0.3737578E-01	0.3207319E-01	0.	0.3438770E-01	0.9297465E-01	0.1402765E-00
0.1688563E-00	0.1767928E-00	0.1642191E-00	0.1331978E-00	0.8723087E-01	0.3205025E-01	0.8398026E-02
-0.3171192E-02	0.	-0.3581178E-02	-0.1382516E-01	-0.2242556E-01	-0.2779767E-01	-0.2961201E-01
-0.2776952E-01	-0.2271068E-01	-0.1508330E-01	-0.5905150E-02	0.3729428E-01	-0.3193359E-01	0.
-0.3424804E-01	-0.9268040E-01	-0.1398867E-00	-0.1684157E-00	-0.1763503E-00	-0.1638171E-00	-0.1328785E-00
-0.8703055E-01	-0.3199326E-01	-0.8290633E-02	0.3691895E-02	0.	0.4118496E-02	0.1466860E-01
0.2348705E-01	0.2896500E-01	0.3077735E-01	0.2882030E-01	0.2355121E-01	0.1563211E-01	0.6106362E-02
-0.7457683E-01	-0.7335080E-01	-0.7090236E-01	-0.6845733E-01	-0.6601676E-01	-0.6360355E-01	-0.6119882E-01
-0.5878959E-01	-0.5640911E-01	-0.5403475E-01	-0.5169183E-01	-0.4938830E-01	-0.4711428E-01	-0.4485110E-01
-0.4264313E-01	-0.4045045E-01	-0.3831360E-01	-0.3625358E-01	-0.3437410E-01	-0.3268648E-01	-0.3114332E-01
-0.2973033E-01	-0.2839494E-01	-0.5437948E-01	-0.2916345E-01	-0.2710584E-01	-0.2584857E-01	-0.2464230E-01
-0.2379073E-04	0.	0.1768091E-02	-0.2218045E-01	0.	0.	0.
0.	0.4173171E-01	0.4145046E-01	0.4391714E-01	0.4511582E-01	0.	0.4579051E-01
0.4611963E-01	0.4535025E-01	0.4317746E-01	0.3904882E-01	0.3230246E-01	0.2375171E-01	0.1403609E-01
0.3436899E-02	-0.9574230E-02	0.7230811E-01	0.9305721E-01	0.5535087E-14	0.9350588E-01	0.1069024E-00
0.1116219E-00	0.1063200E-00	0.9203056E-01	0.7134545E-01	0.4725412E-01	0.2363277E-01	0.4712830E-02
0.4976750E-01	0.6788063E-01	-0.1220087E-13	0.6832400E-01	0.8084149E-01	0.8652572E-01	0.8381209E-01
0.7359911E-01	0.5777965E-01	0.3885406E-01	0.1999969E-01	0.4800900E-02	-0.7395406E-01	-0.9230021E-01
-0.3259371E-13	-0.9268239E-01	-0.1040291E-00	-0.1071694E-00	-0.1010369E-00	-0.8667602E-01	-0.6655400E-01
-0.4349558E-01	-0.2112784E-01	-0.3371422E-02	-0.5170448E-01	-0.6768022E-01	0.1080088E-12	-0.6804959E-01
-0.7875032E-01	-0.8295855E-01	-0.7942576E-01	-0.6905145E-01	-0.5364929E-01	-0.3555718E-01	-0.1775907E-01
-0.3552149E-02	0.1385886E-01	0.1516391E-01	0.9642325E-14	0.1519680E-01	0.1596311E-01	0.1591943E-01
0.1502348E-01	0.1313699E-01	0.1055184E-01	0.7441330E-02	0.4150086E-02	0.1026177E-02	0.7377162E-01
0.7692523E-01	-0.1280728E-13	0.7704859E-01	0.7965905E-01	0.7953386E-01	0.7509327E-01	0.6592097E-01
0.5276255E-01	0.3693998E-01	0.2041151E-01	0.5307435E-02	-0.1734279E-01	-0.1903989E-01	-0.8656509E-14
-0.1907885E-01	-0.2021915E-01	-0.2040022E-01	-0.1938579E-01	-0.1702278E-01	-0.1363641E-01	-0.9494319E-02
-0.5054335E-02	-0.8334334E-03	-0.7640894E-01	-0.7957437E-01	0.1127320E-13	-0.7969963E-01	-0.8212973E-01
-0.8175616E-01	-0.7701834E-01	-0.6748396E-01	-0.5385264E-01	-0.3747158E-01	-0.2037084E-01	-0.4736483E-02
-0.1569220E-04	-0.1595518E-04	-0.1695013E-04	-0.1695014E-04	0.2669773E-04	0.9246052E-05	0.9968233E-02
0.9953021E-02	-0.1421430E-01	-0.1417710E-01	-0.9829689E-02	-0.9812281E-02	0.1408534E-01	0.1404172E-01
0.9327609E-02	0.1582827E-01	-0.8659940E-03	-0.2356290E-02	-0.9323247E-02	-0.1580197E-01	0.8383066E-03
0.2331477E-02	0.3788282E-05	-0.1006381E-03	-0.1562218E-03	0.4306959E-05	0.5071424E-02	0.2274029E-01
-0.1532813E-01	0.7383708E-05	-0.1111186E-03	-0.1699642E-03	-0.1803933E-01	-0.1540816E-01	-0.2251138E-01
0.4803821E-05	-0.1590587E-03	0.9774576E-04	-0.5263367E-02	-0.2318737E-01	0.1589148E-01	0.1193313E-05
0.1089299E-03	0.1710691E-03	0.1764465E-01	0.1488888E-01	0.2303781E-01	0.4336595E-05	0.1570274E-03
-0.9240857E-04	0.2099692E-01	-0.1418959E-01	0.7135842E-02	-0.1235099E-03	-0.1607635E-03	0.9028521E-06
-0.1388427E-01	-0.2173299E-01	-0.3994851E-02	-0.1796485E-03	0.1040804E-03	-0.1280209E-04	-0.2073414E-01
0.1451298E-01	-0.7055940E-02	0.1205988E-03	0.1587416E-03	0.7849650E-05	0.1399294E-01	0.2207205E-01
0.4074065E-02	0.1794371E-03	-0.1072908E-03	0.2316846E-04			

SA-5 RUN #2 MODE 14 XN = 1.829816

0.2082490E-00	0.2021425E-00	0.1899206E-00	0.1776829E-00	0.1654887E-00	0.1533050E-00	0.1411815E-00
0.1291076E-00	0.1170445E-00	0.1050331E-00	0.9313107E-01	0.8129971E-01	0.6955379E-01	0.5791813E-01
0.4633856E-01	0.3487666E-01	0.2355579E-01	0.1243130E-01	0.1866862E-02	-0.8175709E-02	-0.1777120E-01
-0.2698346E-01	-0.3599149E-01	-0.9182508E-01	-0.3078722E-01	-0.4489490E-01	-0.5365819E-01	-0.6230650E-01
0.	0.	0.4998617E-02	-0.8408828E-01	0.	0.	0.
0.	-0.2798722E-01	-0.2231719E-01	-0.3087033E-01	-0.3221856E-01	0.	-0.3321132E-01
-0.3413847E-01	-0.3470644E-01	-0.3388382E-01	-0.3141126E-01	-0.2741110E-01	-0.2378373E-01	-0.2225773E-01
-0.2431347E-01	-0.3616300E-01	-0.1785632E-01	0.6079120E-02	0.	0.6776523E-02	0.2547987E-01
0.3891585E-01	0.4528502E-01	0.4441939E-01	0.3682477E-01	0.2333390E-01	0.5075449E-02	-0.1620644E-01
-0.4271019E-02	-0.2336263E-02	0.	-0.2369217E-02	-0.2408233E-02	-0.2985089E-02	-0.2851984E-02
-0.2290078E-02	-0.1094221E-02	0.2750754E-03	0.1574083E-02	0.2665984E-02	0.1780295E-01	-0.5834746E-02
0.	-0.6543883E-02	-0.2504968E-01	-0.3836879E-01	-0.4473388E-01	-0.4385953E-01	-0.3632874E-01
-0.2295514E-01	-0.4834816E-02	0.1627044E-01	0.4351171E-02	0.2316553E-02	0.	0.2437094E-02
0.2432051E-02	0.2997237E-02	0.2910064E-02	0.2378947E-02	0.1172974E-02	-0.2123158E-03	-0.1512202E-02
-0.2643688E-02	-0.8582856E-02	0.8233153E-02	-0.	0.8831364E-02	0.2344277E-01	0.3500771E-01
0.4095034E-01	0.4089404E-01	0.3472978E-01	0.2339065E-01	0.8051380E-02	-0.9606797E-02	-0.1549848E-01
0.2946020E-02	-0.	0.3457344E-02	0.1700539E-01	0.2665712E-01	0.3196166E-01	0.3245653E-01
0.2846513E-01	0.2016039E-01	0.8233782E-02	-0.6024085E-02	0.8440076E-02	-0.7416115E-02	-0.
-0.8006230E-02	-0.2197161E-01	-0.3318094E-01	-0.3900500E-01	-0.3909492E-01	-0.3331480E-01	-0.2256920E-01
-0.7998078E-02	0.8782048E-02	0.1535021E-01	-0.2749533E-02	-0.	-0.3228862E-02	-0.1657639E-01
-0.2616488E-01	-0.3135905E-01	-0.3170162E-01	-0.2757259E-01	-0.1910969E-01	-0.7058894E-02	0.7281097E-02
0.7211527E-01	0.7005933E-01	0.6590945E-01	0.6178141E-01	0.5766144E-01	0.5349430E-01	0.4935706E-01
0.4528260E-01	0.4112316E-01	0.3705415E-01	0.3299974E-01	0.2898183E-01	0.2495041E-01	0.2102603E-01
0.1703271E-01	0.1315570E-01	0.9295252E-02	0.5534495E-02	0.1959897E-02	-0.1407482E-02	-0.4548965E-02
-0.7547555E-02	-0.1047266E-01	-0.4170868E-02	-0.8770706E-02	-0.1337354E-01	-0.1616812E-01	-0.1892509E-01
-0.2394641E-03	-0.	0.1453984E-02	-0.2724623E-01	-0.	-0.	-0.
-0.	-0.2036204E-01	-0.1528099E-01	-0.1613188E-01	-0.1308518E-01	-0.	-0.1160287E-01
-0.1105701E-01	-0.1225818E-01	-0.1371791E-01	-0.1375219E-01	-0.1142908E-01	-0.8369524E-02	-0.6360670E-02
-0.6742309E-02	-0.9855327E-02	-0.1260274E-01	0.5429104E-02	0.5421588E-14	0.5933731E-02	0.1949040E-01
0.2913803E-01	0.3432024E-01	0.3473195E-01	0.3153051E-01	0.2556883E-01	0.1831888E-01	0.1145316E-01
-0.2702249E-01	-0.9729324E-01	-0.1075035E-13	-0.9924766E-01	-0.1519488E-00	-0.1848751E-00	-0.1926080E-00
-0.1766010E-00	-0.1415112E-00	-0.9354999E-01	-0.4077706E-01	0.7362023E-02	-0.1555116E-02	0.2197362E-01
-0.2935612E-13	0.2278427E-01	0.4279745E-01	0.5749934E-01	0.6359753E-01	0.6161631E-01	0.5250259E-01
0.3855289E-01	0.2263637E-01	0.8519396E-02	0.9502399E-03	0.9061467E-01	0.9921904E-13	0.9324195E-01
0.1626713E-00	0.2092890E-00	0.2255978E-00	0.2127408E-00	0.1759450E-00	0.1224528E-00	0.6187760E-01
0.5847705E-02	-0.4686371E-01	-0.5986250E-01	0.8662516E-14	-0.6049273E-01	-0.7400913E-01	-0.8477975E-01
-0.8867337E-01	-0.8484464E-01	-0.7354222E-01	-0.5685575E-01	-0.3783548E-01	-0.2018241E-01	0.7062136E-02
0.2218425E-01	-0.1162981E-13	0.2272429E-01	0.3606058E-01	0.4692481E-01	0.5359789E-01	0.5524088E-01
0.5242324E-01	0.4599408E-01	0.3765317E-01	0.2957745E-01	0.9884579E-02	0.1975437E-01	-0.8080902E-14
0.2021317E-01	0.3040755E-01	0.3963708E-01	0.4524270E-01	0.4676880E-01	0.4407846E-01	0.3831960E-01
0.3109935E-01	0.2448688E-01	-0.4450391E-01	-0.6366705E-01	0.9680379E-14	-0.6432897E-01	-0.8060998E-01
-0.9255023E-01	-0.9726944E-01	-0.9348258E-01	-0.8199036E-01	-0.6456489E-01	-0.4438153E-01	-0.2525827E-01
0.2156715E-05	0.1371519E-05	-0.1791402E-05	-0.1791444E-05	0.8933752E-04	0.6604784E-04	-0.8782213E-02
-0.8741892E-02	0.1369461E-02	0.1406952E-02	0.8793070E-02	0.8742537E-02	-0.1386475E-02	-0.1428408E-02
-0.1611138E-01	-0.1498962E-01	-0.1299279E-01	-0.1385765E-01	0.1731232E-01	0.1697457E-01	0.1173405E-01
0.1184748E-01	0.2306089E-04	-0.5158511E-04	0.1417849E-03	0.5407927E-04	-0.1063699E-01	-0.4388202E-01
-0.7783330E-02	0.3490508E-04	-0.7802472E-04	0.1116852E-03	0.1447276E-01	-0.1729260E-01	0.5105450E-01
0.7601759E-04	0.3282333E-03	-0.1059023E-04	0.4947754E-02	0.3764553E-01	0.1315952E-01	0.7309301E-04
0.1469761E-04	-0.6362764E-04	-0.1678809E-01	0.1156543E-01	-0.4292342E-01	0.3923479E-04	-0.3209355E-03
0.4717494E-04	-0.3958472E-01	-0.1031445E-01	-0.2828751E-02	-0.6000087E-04	0.1171793E-03	-0.6612751E-05
-0.1980243E-01	0.4353032E-01	-0.2747368E-02	0.2088082E-04	0.1200508E-03	0.6788623E-04	0.4373611E-01
0.1453290E-01	0.3956485E-02	0.6281403E-04	-0.1689460E-03	0.1433829E-03	0.2071034E-01	-0.3953472E-01
0.3646220E-02	-0.6615379E-04	-0.1424214E-03	0.3607503E-04			

SA-5 RUN #2 MODE 15 XN = 1 791427

0.7019003E-01	0.6810493E-01	0.6393261E-01	0.5975680E-01	0.5559487E-01	0.5143782E-01	0.4730043E-01
0.4317893E-01	0.3906174E-01	0.3496248E-01	0.3089983E-01	0.2686357E-01	0.2285522E-01	0.1888320E-01
0.1493204E-01	0.1102065E-01	0.7157063E-02	0.3361438E-02	-0.2439942E-03	-0.3669912E-02	-0.6943330E-02
-0.1008649E-01	-0.1315946E-01	-0.3454452E-01	-0.1138395E-01	-0.1619615E-01	-0.1918582E-01	-0.2213632E-01
0.	0.	0.1723721E-02	-0.2959443E-01	0.	0.	0.
0.	-0.6991142E-02	-0.5232587E-02	-0.7769540E-02	-0.8117519E-02	0.	-0.8353000E-02
-0.8536234E-02	-0.8510124E-02	-0.8070023E-02	-0.7159429E-02	-0.5935876E-02	-0.5084665E-02	-0.5143806E-02
-0.6609988E-02	-0.1144197E-01	0.2066950E-02	0.8278395E-03	0.	0.7663489E-03	-0.5460353E-03
-0.1738028E-02	-0.2472729E-02	-0.2812280E-02	-0.2678988E-02	-0.2181067E-02	-0.1399274E-02	-0.4590132E-03
0.1489997E-01	-0.1849640E-02	0.	-0.2417743E-02	-0.1668916E-01	-0.2757719E-01	-0.3284938E-01
-0.3264505E-01	-0.2704541E-01	-0.1697035E-01	-0.3389402E-02	0.1230132E-01	-0.2063447E-02	-0.7135082E-03
0.	-0.6556527E-03	0.7277919E-03	0.1959066E-02	0.2693180E-02	0.3027072E-02	0.2861141E-02
0.2309770E-02	0.1464254E-02	0.4468138E-03	-0.1487181E-01	0.1827844E-02	0.	0.2421593E-02
0.1666187E-01	0.2754433E-01	0.3282977E-01	0.3263996E-01	0.2704857E-01	0.1698418E-01	0.3420891E-02
-0.1226213E-01	-0.8140008E-02	0.3924139E-02	-0.	0.4337593E-02	0.1462469E-01	0.2275592E-01
0.2709804E-01	0.2742652E-01	0.2364372E-01	0.1632543E-01	0.6239600E-02	-0.5479496E-02	0.1136425E-01
-0.1471023E-02	-0.	-0.1929777E-02	-0.1334895E-01	-0.2274224E-01	-0.2800054E-01	-0.2895620E-01
-0.2534152E-01	-0.1786147E-01	-0.7387139E-02	0.4830513E-02	0.8035195E-02	-0.3726414E-02	-0.
-0.4138314E-02	-0.1422816E-01	-0.2225295E-01	-0.2655356E-01	-0.2691430E-01	-0.2323011E-01	-0.1607049E-01
-0.6195106E-02	0.5280146E-02	-0.1135818E-01	0.1630176E-02	-0.	0.2100877E-02	0.1360958E-01
0.2303279E-01	0.2832375E-01	0.2931336E-01	0.2571475E-01	0.1824688E-01	0.7764780E-02	-0.4479873E-02
-0.2127251E-00	-0.2064572E-00	-0.1939395E-00	-0.1814317E-00	-0.1689526E-00	-0.1565319E-00	-0.1441545E-00
-0.1317894E-00	-0.1194860E-00	-0.1072279E-00	-0.9504492E-01	-0.8299593E-01	-0.7102995E-01	-0.5911218E-01
-0.4732550E-01	-0.3562365E-01	-0.2407197E-01	-0.1272252E-01	-0.1924160E-02	0.8323677E-02	0.1815320E-01
0.2761424E-01	0.3686319E-01	0.1058794E-00	0.3152102E-01	0.4598631E-01	0.5501785E-01	0.6393261E-01
-0.1081346E-03	-0.	-0.4514545E-02	0.8555109E-01	-0.	-0.	-0.
-0.	0.2391990E-01	0.1920127E-01	0.2986263E-01	0.3322466E-01	-0.	0.3537780E-01
0.3702965E-01	0.3734989E-01	0.3533314E-01	0.3119457E-01	0.2538872E-01	0.2009486E-01	0.1701296E-01
0.1763746E-01	0.2866002E-01	-0.2388741E-01	-0.9698000E-01	-0.1081450E-14	-0.9910094E-01	-0.1554361E-00
-0.1921130E-00	-0.2025090E-00	-0.1882971E-00	-0.1537262E-00	-0.1053282E-00	-0.5146984E-01	-0.2309383E-02
-0.3510418E-02	0.5474146E-02	-0.2895874E-14	0.5833284E-02	0.1490875E-01	0.2165491E-01	0.2490372E-01
0.2479885E-01	0.2174849E-01	0.1660223E-01	0.1048114E-01	0.4861907E-02	0.1603448E-01	0.1055105E-00
-0.6205942E-14	0.1081623E-00	0.1778178E-00	0.2243119E-00	0.2394980E-00	0.2250931E-00	0.1861327E-00
0.1303381E-00	0.6772240E-01	0.1054485E-01	-0.5463645E-02	-0.5698888E-02	0.1636445E-13	-0.5699626E-02
-0.5720244E-02	-0.5350990E-02	-0.4484100E-02	-0.3354947E-02	-0.1985882E-02	-0.5744785E-03	0.7045733E-03
0.1644297E-02	0.1809433E-01	0.3378218E-01	0.2742155E-14	0.3433015E-01	0.4788002E-01	0.5822893E-01
0.6339984E-01	0.6248621E-01	0.5630270E-01	0.4597500E-01	0.3357904E-01	0.2165940E-01	0.1274937E-01
0.2628581E-01	-0.1079716E-14	0.2679619E-01	0.3902491E-01	0.4881852E-01	0.5416398E-01	0.5424978E-01
0.4957906E-01	0.4115979E-01	0.3081053E-01	0.2081857E-01	-0.3491385E-01	-0.5197560E-01	-0.8199665E-15
-0.5259960E-01	-0.6764156E-01	-0.7869042E-01	-0.8310190E-01	-0.7978560E-01	-0.6971930E-01	-0.5445405E-01
-0.3671961E-01	-0.1979739E-01	-0.2964626E-01	-0.4448631E-01	0.1442904E-14	-0.4503650E-01	-0.5827549E-01
-0.6835301E-01	-0.7273849E-01	-0.7040871E-01	-0.6197734E-01	-0.4884027E-01	-0.3343521E-01	-0.1874338E-01
-0.3416053E-04	-0.3425856E-04	-0.3479938E-04	-0.3479938E-04	0.6217554E-04	0.3859101E-04	0.4680977E-03
0.4737168E-03	0.9011570E-02	0.9003742E-02	-0.3854170E-03	-0.3932296E-03	-0.9090567E-02	-0.9079833E-02
-0.1442498E-01	-0.1375343E-01	0.1676536E-01	0.1552110E-01	0.1472820E-01	0.1426596E-01	-0.1710877E-01
-0.1603519E-01	0.1608885E-04	0.1344687E-03	0.5186212E-04	0.2418648E-04	0.1421793E-01	-0.1783554E-01
0.4052682E-01	0.3467067E-04	0.3099776E-03	-0.7501678E-05	0.6382424E-02	0.3111534E-01	0.1389403E-01
0.5115746E-04	0.6259921E-04	-0.8099525E-04	-0.1633382E-01	0.1511402E-01	-0.3783141E-01	0.1421151E-04
-0.3311332E-03	0.2649919E-04	-0.7767323E-02	-0.3374947E-01	-0.1053266E-01	-0.1682362E-06	-0.6609984E-04
0.9943300E-04	-0.2080555E-01	0.3419023E-01	-0.3650958E-02	0.2137668E-04	0.1484393E-03	0.3594984E-04
0.3411601E-01	0.1484931E-01	0.3294999E-02	0.6338463E-04	-0.1496104E-03	0.1203348E-03	0.2236363E-01
-0.3232705E-01	0.4138513E-02	-0.2547956E-04	-0.1679893E-03	0.2155239E-04	-0.3344931E-01	-0.1303201E-01
-0.2864177E-02	-0.7765156E-04	0.1366929E-03	-0.7020343E-04			

SA-5 RUN #2 MODE 16 XN = 1.046448

0.3174306E-02	0.3071359E-02	0.2875543E-02	0.2693790E-02	0.2504871E-02	0.2330847E-02	0.2148616E-02
0.1956700E-02	0.1771688E-02	0.1591430E-02	0.1404534E-02	0.1242807E-02	0.1073711E-02	0.8884632E-03
0.7251712E-03	0.5585347E-03	0.3925417E-03	0.2372674E-03	0.8483280E-04	-0.4251525E-04	-0.1638109E-03
-0.2834620E-03	-0.3951064E-03	-0.1932292E-02	-0.3291824E-03	-0.4967524E-03	-0.6068517E-03	-0.7155374E-03
-0.	-0.	0.3635443E-04	-0.1039114E-02	-0.	-0.	-0.
-0.	0.5351839E-03	0.4866546E-03	0.6087757E-03	0.6450921E-03	-0.	0.6826029E-03
0.7354847E-03	0.8324952E-03	0.9131817E-03	0.9667630E-03	0.9500052E-03	0.8486481E-03	0.6916049E-03
0.4925710E-03	0.3306057E-03	0.1119574E-02	-0.3418285E-03	-0.	-0.3745181E-03	-0.1407054E-02
-0.2031166E-02	-0.2149315E-02	-0.1819403E-02	-0.1051584E-02	0.5021858E-04	0.1389543E-02	0.2868163E-02
0.2093666E-02	-0.1073487E-02	-0.	-0.1158715E-02	-0.3319475E-02	-0.4545867E-02	-0.4653840E-02
-0.3761963E-02	-0.1942672E-02	0.5799943E-03	0.3597223E-02	0.6874040E-02	-0.1310388E-02	0.3088193E-03
-0.	0.3572040E-03	0.1516915E-02	0.2234097E-02	0.2411499E-02	0.2047984E-02	0.1200552E-02
-0.2319486E-04	-0.1527294E-02	-0.3181896E-02	-0.2203822E-02	0.9342780E-03	-0.	0.9740646E-03
0.3114885E-02	0.4351062E-02	0.4473451E-02	0.3639152E-02	0.1924542E-02	-0.4769079E-03	-0.3378775E-02
-0.6523193E-02	-0.7393419E-03	0.4224990E-03	0.	0.4486794E-03	0.1246751E-02	0.1731186E-02
0.1833021E-02	0.1588613E-02	0.9996617E-03	0.1228937E-03	-0.9598724E-03	-0.2157250E-02	0.1608067E-02
-0.1231089E-02	0.	-0.1320335E-02	-0.3315944E-02	-0.4488900E-02	-0.4664675E-02	-0.3928077E-02
-0.2287135E-02	0.6579400E-04	0.2933008E-02	0.6077001E-02	0.1043369E-03	-0.8072130E-03	0.
-0.8140259E-03	-0.1372804E-02	-0.1614516E-02	-0.1546072E-02	-0.1195093E-02	-0.5807949E-03	0.2407982E-03
0.1201480E-02	0.2237110E-02	-0.2247120E-02	0.7996818E-03	0.	0.8824962E-03	0.3081437E-02
0.4479816E-02	0.4825936E-02	0.4194236E-02	0.2605734E-02	0.2222504E-03	-0.2732560E-02	-0.5991115E-02
0.3677012E-00	0.3569021E-00	0.3353333E-00	0.3138024E-00	0.2923517E-00	0.2710466E-00	0.2498712E-00
0.2287542E-00	0.2077721E-00	0.1869567E-00	0.1663620E-00	0.1461576E-00	0.1261805E-00	0.1063902E-00
0.8694121E-01	0.6777978E-01	0.4905237E-01	0.3095266E-01	0.1449922E-01	-0.2895688E-03	-0.1377665E-01
-0.2614150E-01	-0.3786264E-01	-0.1333872E-00	-0.3111839E-01	-0.4921066E-01	-0.6024051E-01	-0.7090898E-01
0.3218244E-05	0.	0.2903194E-02	-0.9679582E-01	0.	0.	0.
0.	0.7615668E-02	0.7678075E-02	0.9500447E-02	0.1072606E-01	0.	0.1214300E-01
0.1433017E-01	0.1881096E-01	0.2310355E-01	0.2692986E-01	0.2849121E-01	0.2649589E-01	0.2146024E-01
0.1332204E-01	0.7541004E-03	-0.6164991E-02	-0.2683406E-01	0.1983695E-14	-0.2737047E-01	-0.4196724E-01
-0.4947418E-01	-0.4846648E-01	-0.4019805E-01	-0.2707097E-01	-0.1227118E-01	0.2288024E-03	0.6426688E-02
0.2708289E-02	0.1208955E-01	-0.4791797E-14	0.1232003E-01	0.1888736E-01	0.2217278E-01	0.2156109E-01
0.1764256E-01	0.1153478E-01	0.4702711E-02	-0.1050141E-02	-0.3931412E-02	0.7201065E-02	0.2923377E-01
-0.1260362E-13	0.2978919E-01	0.4526864E-01	0.5315313E-01	0.5196334E-01	0.4303826E-01	0.2893783E-01
0.1302466E-01	-0.5233662E-03	-0.7488211E-02	-0.1833729E-02	-0.1004915E-01	0.4125898E-13	-0.1025593E-01
-0.1606956E-01	-0.1906644E-01	-0.1865386E-01	-0.1533592E-01	-0.1010018E-01	-0.4251663E-02	0.5929749E-03
0.2814774E-02	0.1410222E-02	-0.2919351E-02	0.3733657E-14	-0.2655187E-02	-0.8334056E-04	0.6543149E-02
0.1464997E-01	0.2171195E-01	0.2591053E-01	0.2599702E-01	0.2134609E-01	0.1246627E-01	0.8603737E-03
-0.8524920E-04	-0.4865232E-14	0.6973379E-04	0.2170117E-02	0.5878893E-02	0.9823061E-02	0.1280862E-01
0.1405488E-01	0.1314525E-01	0.1002429E-01	0.5178264E-02	-0.1887246E-02	0.1521464E-02	-0.3265226E-14
0.1180811E-02	-0.2877334E-02	-0.1114406E-01	-0.2056051E-01	-0.2829169E-01	-0.3237595E-01	-0.3159547E-01
-0.2550589E-01	-0.1494007E-01	0.2130387E-03	0.1987912E-02	0.4410059E-14	0.1869912E-02	0.5358974E-03
-0.2556936E-02	-0.6237087E-02	-0.9409288E-02	-0.1130486E-01	-0.1140065E-01	-0.9446416E-02	-0.5704282E-02
-0.2057997E-03	-0.2046094E-03	-0.2005982E-03	-0.2005982E-03	0.1226322E-03	0.5372791E-04	-0.3637576E-02
-0.3623908E-02	-0.1008599E-01	-0.1004687E-01	0.4374214E-02	0.4354259E-02	0.9445075E-02	0.9401193E-02
0.4193241E-02	0.3292455E-02	-0.1048416E-01	-0.8036786E-02	-0.4218108E-02	-0.3248137E-02	0.1044642E-01
0.8055578E-02	0.3364634E-04	-0.1005473E-03	0.4064150E-06	-0.7223089E-05	-0.4680822E-02	0.7373605E-03
-0.3313576E-02	-0.8510386E-05	-0.8342271E-04	-0.9058195E-05	-0.9137641E-02	-0.2871287E-02	-0.1413807E-02
-0.4425907E-05	-0.1348371E-04	0.1312683E-03	0.5223976E-02	0.4972448E-03	0.2[illegible]949E-02	-0.7595824E-05
0.8186674E-04	-0.2023232E-05	0.8466800E-02	0.3717121E-02	0.5935555E-04	-0.9333677[illegible]	0.8510229E-05
-0.1199514E-03	-0.6972108E-03	-0.3344632E-02	-0.1017270E-03	-0.8867130E-04	0.1088867E-04	[illegible]7932E-04
-0.3370419E-02	-0.6014988E-03	-0.3995635E-02	0.1215229E-04	0.9752395E-04	0.4651113E-05	0.10[illegible]-02
0.2627683E-02	0.2219320E-03	0.7958169E-04	-0.8879184E-05	0.4177554E-06	0.3142585E-02	0.1294696[illegible]
0.4128887E-02	-0.4051108E-05	-0.1035314E-03	-0.1658171E-04			

0.1417225E-02	0.1467631E-02	0.1409393E-02	0.1114328E-02	0.9646878E-03	0.5763274E-03	0.3623636E-03
0.3348097E-03	0.1974433E-03	0.2083572E-04	0.2047348E-04	-0.3445727E-03	-0.5379912E-03	-0.4001149E-03
-0.5851518E-03	-0.6403433E-03	-0.6196827E-03	-0.6513586E-03	-0.3832965E-03	-0.1996867E-03	0.1569053E-03
0.7248361E-03	0.1288426E-02	0.8555597E-02	0.9308253E-03	0.1751534E-02	0.2436408E-02	0.3168800E-02
0.	0.	-0.2762458E-03	0.4422252E-02	0.	0.	0.
0.	0.1976174E-02	0.2047565E-02	0.1658002E-02	0.1577024E-02	0.	0.1428696E-02
0.1159881E-02	0.5690427E-03	0.1107351E-04	-0.4574089E-03	-0.6440494E-03	-0.4720714E-03	-0.2555040E-04
0.6678929E-03	0.2122111E-02	-0.3354281E-01	-0.7387577E-02	0.	-0.7195888E-02	0.5418163E-02
0.7974307E-02	0.6039107E-02	0.1847359E-02	0.8970631E-04	-0.1952857E-03	-0.5653519E-03	-0.2508117E-02
-0.8444443E-01	-0.1952763E-01	0.	-0.1874866E-01	0.1180095E-01	0.1701233E-01	0.1114430E-01
-0.1074839E-03	-0.4493112E-02	-0.4740337E-02	-0.5101797E-02	-0.8994352E-02	0.3193204E-01	0.6850366E-02
0.	0.6489953E-02	-0.5424664E-02	-0.7698089E-02	-0.6157311E-02	-0.1895584E-02	-0.2131787E-03
0.6318587E-05	0.5422800E-03	0.2565587E-02	0.8475091E-01	0.1939460E-01	0.	0.1938325E-01
-0.1158860E-01	-0.1710912E-01	-0.1109134E-01	0.1952199E-03	0.4328329E-02	0.4431246E-02	0.5000924E-02
0.8916129E-02	0.3630542E-01	0.1098531E-01	-0.	0.1076014E-01	-0.1260832E-02	-0.3385796E-02
-0.7313696E-03	0.4316312E-02	0.6292438E-02	0.6126812E-02	0.5313369E-02	0.5392978E-02	-0.8830666E-01
-0.2092544E-01	-0.	-0.1984276E-01	0.1414186E-01	0.2197967E-01	0.1653237E-01	0.3886230E-02
-0.2328075E-02	-0.3884788E-02	-0.4830869E-02	-0.8713996E-02	-0.4119728E-01	-0.1204402E-01	-0.
-0.1189611E-01	0.2483110E-02	0.5379430E-02	0.2751574E-02	-0.2930614E-02	-0.5596748E-02	-0.5890868E-02
-0.5254192E-02	-0.5342257E-02	0.8333153E-01	0.1935368E-01	-0.	0.1856960E-01	-0.1344309E-01
-0.2100581E-01	-0.1594635E-01	-0.3898670E-02	0.1587368E-02	0.3022577E-02	0.4218066E-02	0.8454673E-02
-0.2919750E-00	-0.2836802E-00	-0.2673694E-00	-0.2509752E-00	-0.2345967E-00	-0.2188783E-00	-0.2030903E-00
-0.1868530E-00	-0.1715179E-00	-0.1556568E-00	-0.1400772E-00	-0.1246690E-00	-0.1096691E-00	-0.9407343E-01
-0.7953845E-01	-0.6436786E-01	-0.4968529E-01	-0.3516399E-01	-0.2122037E-01	-0.7838361E-02	0.5613491E-02
0.1875119E-01	0.3163129E-01	0.4349754E-00	0.2425357E-01	0.4424907E-01	0.5731877E-01	0.7018942E-01
0.2809963E-05	-0.	-0.2630878E-02	0.8669782E-01	-0.	-0.	-0.
-0.	-0.1314262E-00	-0.1342017E-00	-0.4501057E-01	0.4634822E-02	-0.	0.3275735E-01
0.4838177E-01	0.3238055E-01	-0.1137328E-01	-0.6335458E-01	-0.9381535E-01	-0.8746574E-01	-0.6175667E-01
-0.3241295E-01	-0.3597690E-02	-0.5567074E-01	0.1299362E-01	-0.1640031E-14	0.1408837E-01	0.5231695E-01
0.6636943E-01	0.6661988E-01	0.5530958E-01	0.4337896E-01	0.2842845E-01	0.1089575E-01	-0.3998756E-02
0.3118534E-01	0.2680588E-02	-0.7787318E-15	0.2271096E-02	-0.1298790E-01	-0.1784859E-01	-0.1764650E-01
-0.1354510E-01	-0.1006886E-01	-0.5965321E-02	-0.1005899E-02	0.2871765E-02	0.6769399E-01	-0.1011000E-01
-0.7129030E-15	-0.1134201E-01	-0.5505212E-01	-0.7175712E-01	-0.7236134E-01	-0.5996828E-01	-0.4644723E-01
-0.2982984E-01	-0.1071395E-01	0.5308452E-02	-0.1937141E-01	0.9495337E-03	-0.1590115E-14	0.1224362E-02
0.1143002E-01	0.1430284E-01	0.1407014E-01	0.1087082E-01	0.8655626E-02	0.5760993E-02	0.1761337E-02
-0.1381512E-02	-0.6529410E-01	-0.1369024E-01	0.9843281E-15	-0.1260851E-01	0.2122442E-01	0.3564351E-01
0.3703636E-01	0.2719140E-01	0.1892375E-01	0.1147345E-01	0.3998761E-02	-0.3127621E-02	-0.2425970E-01
-0.4182000E-02	0.7792267E-15	-0.3755632E-02	0.9455047E-02	0.1499378E-01	0.1539374E-01	0.1123685E-01
0.7754269E-02	0.4536489E-02	0.1268957E-02	-0.1879230E-02	0.7678672E-01	0.2166861E-01	0.4421909E-15
0.2045824E-01	-0.1590661E-01	-0.3189549E-01	-0.3378481E-01	-0.2382990E-01	-0.1545779E-01	-0.8155927E-02
-0.1098445E-02	0.5393826E-02	0.3218903E-01	-0.3736899E-02	-0.2081932E-15	-0.4081508E-02	-0.1989544E-01
-0.2252711E-01	-0.1868067E-01	-0.1145435E-01	-0.6304877E-02	-0.2515847E-02	0.7070297E-03	0.3739586E-02
0.3503523E-03	0.2905237E-03	0.9152123E-04	0.9152093E-04	0.1190625E-02	0.1222222E-03	0.5888630E-02
0.6106712E-02	0.1147601E-01	0.1195773E-01	-0.6263775E-02	-0.6508752E-02	-0.1139010E-01	-0.1197104E-01
-0.1304020E-01	-0.5376087E-02	0.3754076E-01	0.1766224E-01	0.1251910E-01	0.5115870E-02	-0.3812964E-01
-0.1786921E-01	-0.1771803E-04	-0.3023399E-04	-0.1546644E-04	0.6027932E-05	0.2029660E-03	-0.2042449E-02
0.9553477E-02	0.5938298E-04	0.2597403E-03	-0.1565356E-03	-0.3801787E-02	0.5849779E-02	-0.9908892E-02
0.1681075E-03	0.5200177E-04	0.3640366E-04	-0.1979453E-03	0.1382766E-02	-0.8759257E-02	-0.5017545E-04
-0.2626584E-03	0.1551077E-03	0.4021872E-02	-0.6431102E-02	0.1072722E-01	-0.1589460E-03	-0.5471764E-04
-0.4395680E-04	0.8604734E-02	0.3152598E-02	0.7804130E-03	0.3538060E-03	-0.1873924E-03	0.7926590E-03
-0.1235110E-01	0.1221615E-02	0.1166400E-01	0.9467370E-04	-0.2962750E-03	0.1621828E-03	-0.8764065E-02
-0.2630617E-02	-0.7614530E-03	-0.3504327E-03	0.1885075E-03	-0.7822245E-03	0.1231868E-01	-0.7742975E-03
-0.1164737E-01	-0.9514847E-04	0.2992368E-03	-0.1549860E-03			

SA-5 RUN #2 MODE 18 XN = .6314452

0.1033851E-01	0.9989481E-02	0.9320677E-02	0.8692839E-02	0.8053091E-02	0.7460415E-02	0.6856360E-02
0.6232378E-02	0.5631876E-02	0.5051039E-02	0.4462308E-02	0.3949051E-02	0.3419367E-02	0.2854190E-02
0.2351401E-02	0.1846336E-02	0.1349335E-02	0.8902730E-03	0.4554400E-03	0.9921814E-04	-0.2348737E-03
-0.5637175E-03	-0.8724728E-03	-0.8380149E-02	-0.6899560E-03	-0.1158884E-02	-0.1470966E-02	-0.1785954E-02
-0.	-0.	0.5800765E-04	-0.2887051E-02	-0.	-0.	-0.
-0.	0.3750532E-02	0.2986809E-02	0.4435600E-02	0.4700391E-02	-0.	0.4959321E-02
0.5293200E-02	0.5795940E-02	0.6055984E-02	0.5984989E-02	0.5423158E-02	0.4539670E-02	0.3608721E-02
0.2811873E-02	0.2912446E-02	-0.6585348E-02	-0.7872350E-02	-0.	-0.7693476E-02	-0.5599662E-02
-0.1747094E-02	0.1360843E-02	0.4215287E-02	0.5224633E-02	0.4987845E-02	0.3757074E-02	0.2033631E-02
-0.2174588E-01	-0.2292122E-01	-0.	-0.2240752E-01	-0.1483561E-01	-0.2942037E-02	0.6451174E-02
0.1419555E-01	0.1632567E-01	0.1438005E-01	0.9110391E-02	0.1987065E-02	0.6653008E-02	0.7807180E-02
-0.	0.7660470E-02	0.5635667E-02	0.1946514E-02	-0.9881803E-03	-0.3855556E-02	-0.4970774E-02
-0.4935366E-02	-0.4006092E-02	-0.2612324E-02	0.2114075E-01	0.2238792E-01	-0.	0.2176052E-01
0.1428324E-01	0.2447593E-02	-0.6820344E-02	-0.1436350E-01	-0.1623416E-01	-0.1404372E-01	-0.8586394E-02
-0.1267561E-02	0.9709648E-02	0.8069747E-02	0.	0.7796790E-02	0.3214269E-02	-0.2482139E-02
-0.6333801E-02	-0.8648665E-02	-0.7954755E-02	-0.5286931E-02	-0.1323522E-02	0.3174559E-02	-0.1929565E-01
-0.1937405E-01	0.	-0.1885826E-01	-0.1070812E-01	0.1278828E-02	0.1002597E-01	0.1625735E-01
0.1616935E-01	0.1194887E-01	0.4977580E-02	-0.3137262E-02	-0.1078012E-01	-0.9639333E-02	0.
-0.9326185E-02	-0.4536906E-02	0.1848362E-02	0.6423152E-02	0.9271503E-02	0.8815377E-02	0.6110698E-02
0.1908765E-02	-0.2938906E-02	0.1994472E-01	0.1915474E-01	0.	0.1861662E-01	0.1027277E-01
-0.1444449E-02	-0.9878887E-02	-0.1592213E-01	-0.1576443E-01	-0.1161012E-01	-0.4758916E-02	0.3222441E-02
0.9832421E-01	0.9531370E-01	0.8933683E-01	0.8336241E-01	0.7744321E-01	0.7167084E-01	0.6594650E-01
0.6020982E-01	0.5462441E-01	0.4907629E-01	0.4362697E-01	0.3835376E-01	0.3321091E-01	0.2809164E-01
0.2319993E-01	0.1835215E-01	0.1370216E-01	0.9288310E-02	0.5529780E-02	0.2386824E-02	-0.3398397E-03
-0.2658810E-02	-0.4749543E-02	-0.3488032E-01	-0.3559662E-02	-0.6703683E-02	-0.8603712E-02	-0.1039140E-01
0.1823622E-04	0.	0.1391779E-03	-0.7282875E-02	0.	0.	0.
0.	-0.4925633E-01	-0.2919051E-01	-0.1060100E-00	-0.1382620E-00	0.	-0.1619795E-00
-0.1858331E-00	-0.2125618E-00	-0.2233165E-00	-0.2196009E-00	-0.1935358E-00	-0.1480654E-00	-0.9525973E-01
-0.4338126E-01	-0.2798497E-01	-0.7424555E-02	0.2720232E-01	0.9753271E-14	0.2832899E-01	0.5655968E-01
0.7304680E-01	0.7100717E-01	0.5625826E-01	0.3130701E-01	0.5151987E-02	-0.1239872E-01	-0.1124111E-01
-0.8605896E-04	-0.1128590E-01	-0.3234556E-13	-0.1168869E-01	-0.2131269E-01	-0.2668786E-01	-0.2507604E-01
-0.1874652E-01	-0.8836134E-02	0.9247022E-03	0.6600400E-02	0.4308196E-02	0.6402436E-02	-0.2747271E-01
-0.8388700E-13	-0.2872523E-01	-0.5747480E-01	-0.7501438E-01	-0.7363211E-01	-0.5867065E-01	-0.3283331E-01
-0.5490054E-02	0.1316348E-01	0.1260725E-01	-0.2961743E-02	0.1012695E-01	0.2665874E-12	0.1051507E-01
0.2049077E-01	0.2567561E-01	0.2392439E-01	0.1789390E-01	0.8669193E-02	-0.3110785E-03	-0.5409737E-02
-0.2839734E-02	-0.1634341E-01	0.2025611E-01	0.2835275E-13	0.2395185E-01	0.9220585E-01	0.1674393E-00
0.2207609E-00	0.2400586E-00	0.2182766E-00	0.1641271E-00	0.9464435E-01	0.3285224E-01	-0.9536418E-02
0.7877740E-02	-0.3105477E-13	0.9566097E-02	0.4060483E-01	0.7441804E-01	0.9822891E-01	0.1066493E-00
0.9673443E-01	0.7233359E-01	0.4107340E-01	0.1322296E-01	0.1452376E-01	-0.2159067E-01	-0.2030892E-13
-0.2536536E-01	-0.9462559E-01	-0.1720043E-00	-0.2273677E-00	-0.2476280E-00	-0.2253956E-00	-0.1695304E-00
-0.9755596E-01	-0.3319964E-01	0.8490935E-02	-0.6096065E-02	0.2848800E-13	-0.7902185E-02	-0.3869237E-01
-0.7186782E-01	-0.9403858E-01	-0.1006307E-00	-0.8956969E-01	-0.6531798E-01	-0.3556058E-01	-0.9994897E-02
-0.1104387E-02	-0.1085663E-02	-0.1022074E-02	-0.1022074E-02	0.3625918E-03	0.2509586E-03	-0.1133968E-01
-0.1130584E-01	-0.3215587E-01	-0.3205105E-01	0.1281536E-01	0.1276747E-01	0.3119742E-01	0.3107168E-01
0.6671387E-02	0.7092067E-02	-0.1538962E-01	-0.1393147E-01	-0.6558123E-02	-0.6870002E-02	0.1520359E-01
0.1410090E-01	0.1761830E-03	-0.1336846E-03	-0.8619769E-05	0.8224773E-05	0.7751043E-02	0.9760842E-02
-0.2200932E-01	0.2475752E-04	-0.3203276E-03	-0.1221146E-03	-0.2391234E-01	-0.1408267E-01	-0.3330883E-02
-0.1756146E-04	-0.5152753E-04	0.6536459E-03	-0.6355858E-02	-0.1035028E-01	0.2349850E-01	-0.9468887E-05
0.3243152E-03	0.1037584E-03	0.2310995E-01	0.1280476E-01	0.4243528E-02	0.3690984E-04	0.4854447E-04
-0.6313609E-03	-0.2489964E-02	-0.1757371E-01	-0.2598005E-02	0.7428670E-03	-0.7156170E-04	-0.9400465E-04
-0.3628375E-01	-0.4431176E-02	0.5645841E-02	0.2267356E-05	0.9274645E-04	0.7370761E-04	0.3054022E-02
0.1816690E-01	0.3029510E-02	-0.7591127E-03	0.7696369E-04	0.1059184E-03	0.3588589E-01	0.5281871E-02
-0.5189856E-02	0.1326633E-04	-0.1019222E-03	-0.4524383E-04			

SA-5 RUN #2 MODE 19 XN = 6306326

0.2899399E-02	0.2966030E-02	0.2932542E-02	0.2644501E-02	0.2496299E-02	0.2087339E-02	0.1844035E-02
0.1787113E-02	0.1602405E-02	0.1369930E-02	0.1302506E-02	0.8385167E-03	0.5522210E-03	0.5953513E-03
0.2958350E-03	0.1188707E-03	0.1145801E-04	-0.1715824E-03	-0.6826730E-04	-0.7435414E-04	0.8858760E-04
0.4712039E-03	0.8522047E-03	0.2199312E-01	0.5987967E-03	0.1137201E-02	0.1658553E-02	0.2241350E-02
0.	0.	-0.1047438E-03	0.2934225E-02	0.	0.	0.
0.	-0.1301176E-01	-0.1033901E-01	-0.1556446E-01	-0.1662640E-01	0.	-0.1771338E-01
-0.1919221E-01	-0.2164370E-01	-0.2320013E-01	-0.2333009E-01	-0.2094719E-01	-0.1664615E-01	-0.1209448E-01
-0.8506142E-02	-0.9837848E-02	-0.3103160E-01	-0.1540278E-01	0.	-0.1523668E-01	-0.6156576E-02
0.1511929E-03	0.5480656E-02	0.9078801E-02	0.1045092E-01	0.8833861E-02	0.4119104E-02	-0.3200310E-02
-0.5391986E-01	-0.2419915E-01	0.	-0.2385047E-01	-0.1062887E-01	-0.3473566E-02	0.4073581E-02
0.1038327E-01	0.1496634E-01	0.1519586E-01	0.1002181E-01	0.1812763E-03	0.2956290E-01	0.1511885E-01
0.	0.1478803E-01	0.6433014E-02	0.5311061E-03	-0.4937884E-02	-0.8187175E-02	-0.9473700E-02
-0.7937195E-02	-0.3248228E-02	0.3841149E-02	0.5446065E-01	0.2383256E-01	0.	0.2428199E-01
0.1062766E-01	0.3279309E-02	-0.3874883E-02	-0.9935138E-02	-0.1464948E-01	-0.1506266E-01	-0.9918873E-02
-0.4499942E-03	0.1466741E-01	0.3302842E-02	-0.	0.3348778E-02	-0.3684606E-03	-0.5867791E-03
-0.6656761E-03	-0.1013539E-02	-0.2071188E-02	-0.2608193E-02	-0.2171012E-02	-0.6254207E-03	-0.6265265E-01
-0.2538867E-01	-0.	-0.2465973E-01	-0.5329372E-02	0.4795534E-02	0.1247064E-01	0.1718983E-01
0.1904241E-01	0.1560618E-01	0.6145236E-02	-0.8177219E-02	-0.1918995E-01	-0.5142861E-02	-0.
-0.5307740E-02	-0.8569428E-04	0.6974896E-03	0.1425509E-02	0.2192129E-02	0.3524000E-02	0.4086483E-02
0.3333317E-02	0.1172149E-02	0.5978845E-01	0.2552671E-01	-0.	0.2510294E-01	0.7502620E-02
-0.2166739E-02	-0.9484217E-02	-0.1394888E-01	-0.1610174E-01	-0.1306945E-01	-0.4429925E-02	0.8637839E-02
0.9304768E-01	0.9045542E-01	0.8496202E-01	0.7961106E-01	0.7434380E-01	0.6852778E-01	0.6292202E-01
0.5789040E-01	0.5198074E-01	0.4685255E-01	0.4162290E-01	0.3654577E-01	0.3121306E-01	0.2675245E-01
0.2139742E-01	0.1699705E-01	0.1242702E-01	0.8264339E-02	0.4861123E-02	0.2239444E-02	0.7944750E-03
-0.6252515E-04	-0.6863158E-03	0.2140721E-03	-0.2504750E-03	-0.1328505E-02	-0.1206744E-02	-0.1049448E-02
0.1347351E-03	-0.	0.1329524E-03	-0.8648842E-02	-0.	-0.	-0.
-0.	-0.1334160E-00	-0.8682239E-01	-0.1260686E-00	-0.1177209E-00	-0.	-0.1198689E-00
-0.1328113E-00	-0.1701071E-00	-0.2024495E-00	-0.2149225E-00	-0.1897884E-00	-0.1381630E-00	-0.8312555E-01
-0.4062993E-01	-0.2661000E-01	-0.2150364E-01	0.1920381E-01	-0.1068947E-13	0.1981402E-01	0.4100147E-01
0.4699855E-01	0.4168018E-01	0.2664656E-01	0.8463594E-02	-0.8162455E-02	-0.1659529E-01	-0.1313282E-01
0.2492393E-01	-0.1593640E-01	0.1847031E-13	-0.1677564E-01	-0.4285021E-01	-0.5551074E-01	-0.5557143E-01
-0.4472023E-01	-0.2773480E-01	-0.9296293E-02	0.4638365E-02	0.9290404E-02	0.3907861E-01	-0.2770988E-01
0.4996552E-13	-0.2887162E-01	-0.6783740E-01	-0.8483313E-01	-0.8364191E-01	-0.6677204E-01	-0.4220367E-01
-0.1608763E-01	0.3048264E-02	0.8725651E-02	-0.8136208E-02	0.1065963E-01	-0.1694420E-12	0.1102441E-01
0.2205693E-01	0.2590370E-01	0.2265949E-01	0.1301734E-01	0.9770646E-03	-0.9986240E-02	-0.1553854E-01
-0.1283397E-01	-0.3000838E-01	0.3097808E-01	-0.1249717E-13	0.3473505E-01	0.1133268E-00	0.1897787E-00
0.2435605E-00	0.2595523E-00	0.2358802E-00	0.1781027E-00	0.1021728E-00	0.2948515E-01	0.2437486E-02
0.1793164E-01	0.2077167E-13	0.1881053E-01	0.3738896E-01	0.5451347E-01	0.6611226E-01	0.6843398E-01
0.6165006E-01	0.4695387E-01	0.2827591E-01	0.1055137E-01	0.5596075E-01	-0.6950218E-02	0.1402818E-13
-0.1067025E-01	-0.8857538E-01	-0.1632305E-00	-0.2159747E-00	-0.2330203E-00	-0.2129860E-00	-0.1609151E-00
-0.9180866E-01	-0.2601351E-01	0.2003446E-01	-0.6853715E-02	-0.1861558E-13	-0.7563492E-02	-0.2605157E-01
-0.4112092E-01	-0.5212380E-01	-0.5581962E-01	-0.5133059E-01	-0.3941628E-01	-0.2391892E-01	-0.9492184E-02
-0.1216736E-02	-0.1211331E-02	-0.1197810E-02	-0.1197810E-02	0.9137536E-03	0.2201983E-03	-0.1789314E-01
-0.1762711E-01	-0.2625672E-01	-0.2575833E-01	0.1749093E-01	0.1715890E-01	0.2744142E-01	0.2685622E-01
-0.1684669E-03	0.2326878E-02	-0.4628172E-03	-0.1219491E-01	-0.1913229E-03	-0.2312086E-02	-0.1202118E-04
0.1259613E-01	0.1551165E-03	-0.2468855E-03	0.4384559E-04	-0.1583505E-05	-0.7002310E-02	-0.5026812E-02
-0.2697956E-01	0.5026781E-04	-0.2308753E-03	-0.1883551E-04	-0.2820014E-01	-0.2025584E-01	0.8926669E-02
0.7046228E-04	0.1170786E-03	0.5660374E-03	0.8668622E-02	0.4418464E-02	0.2772948E-01	-0.5059337E-04
0.2563494E-03	0.1718637E-04	0.3099683E-01	0.2000362E-01	-0.8100168E-02	-0.7458521E-04	-0.9544762E-04
-0.5915828E-03	-0.1884724E-01	-0.2611735E-01	-0.3331966E-02	0.5785188E-03	-0.7239363E-05	0.6282749E-04
-0.4394570E-01	0.9594253E-02	0.6031626E-02	-0.4165361E-04	0.4071218E-05	0.1419407E-03	0.1724713E-01
0.2638119E-01	0.3234889E-02	-0.5634631E-03	0.2207229E-04	-0.5604528E-04	0.4333864E-01	-0.9391128E-02
-0.6120092E-02	0.4443936E-04	0.1634421E-04	-0.1432376E-03			

SA-5 RUN #2 MODE 20 XN = 3895338

0.4030930E-02	0.3842022E-02	0.3553528E-02	0.3401967E-02	0.3181281E-02	0.3108394E-02	0.2956614E-02
0.2711958E-02	0.2538354E-02	0.2400855E-02	0.2183787E-02	0.2190243E-02	0.2113029E-02	0.1863204E-02
0.1807068E-02	0.1693753E-02	0.1556414E-02	0.1472464E-02	0.1278349E-02	0.1178099E-02	0.1012806E-02
0.7494051E-03	0.4956783E-03	0.2919290E-03	0.6596891E-03	0.2983001E-03	-0.2451977E-04	-0.3802146E-03
0.	0.	0.3272437E-04	-0.8023950E-03	0.	0.	0.
0.	-0.5478091E-02	-0.5325971E-02	-0.5513166E-02	-0.5643159E-02	0.	-0.5743313E-02
-0.5861986E-02	-0.6047390E-02	-0.6137149E-02	-0.5984250E-02	-0.5327321E-02	-0.4290912E-02	-0.3301414E-02
-0.2690105E-02	-0.3748508E-02	0.3929076E-01	0.2233198E-01	0.	0.2197305E-01	0.9898918E-02
-0.2087545E-04	-0.8434947E-02	-0.1252812E-01	-0.1273632E-01	-0.8058307E-02	0.1067656E-02	0.1331559E-01
0.1057676E-00	0.6085467E-01	0.	0.5969422E-01	0.2754921E-01	0.7933636E-03	-0.2196816E-01
-0.3332299E-01	-0.3405054E-01	-0.2146294E-01	0.3262457E-02	0.3615231E-01	-0.3778680E-01	-0.2158623E-01
0.	-0.2113246E-01	-0.9525211E-02	0.4927735E-04	0.8317281E-02	0.1196673E-01	0.1190135E-01
0.7129169E-02	-0.1995706E-02	-0.1403869E-01	-0.1063134E-00	-0.6085433E-01	0.	-0.6012239E-01
-0.2767511E-01	-0.8169109E-03	0.2180634E-01	0.3312801E-01	0.3401652E-01	0.2160340E-01	-0.3045247E-02
-0.3569866E-01	-0.4549003E-01	-0.2389341E-01	-0.	-0.2340496E-01	-0.8249430E-02	0.3389403E-02
0.1218142E-01	0.1580675E-01	0.1491229E-01	0.8501961E-02	-0.2649833E-02	-0.1684147E-01	0.1045503E-00
0.5707287E-01	-0.	0.5580826E-01	0.2236979E-01	-0.3850359E-02	-0.2515524E-01	-0.3522821E-01
-0.3508578E-01	-0.2191327E-01	0.2956846E-02	0.3546464E-01	0.4902019E-01	0.2545566E-01	-0.
0.2502994E-01	0.8859127E-02	-0.3170259E-02	-0.1241974E-01	-0.1645425E-01	-0.1589344E-01	-0.9586746E-02
0.1787802E-02	0.1647683E-01	-0.1012470E-00	-0.5601118E-01	-0.	-0.5491350E-01	-0.2272808E-01
0.2973379E-02	0.2377941E-01	0.3336916E-01	0.3309574E-01	0.2002881E-01	-0.4303249E-02	-0.3588933E-01
0.2090856E-00	0.2015126E-00	0.1865410E-00	0.1715705E-00	0.1567199E-00	0.1423889E-00	0.1281802E-00
0.1138256E-00	0.1000836E-00	0.8629161E-01	0.7288245E-01	0.6000219E-01	0.4758145E-01	0.3508271E-01
0.2348492E-01	0.1188673E-01	0.9989624E-03	-0.9127190E-02	-0.1718669E-01	-0.2320763E-01	-0.2790629E-01
-0.3127578E-01	-0.3385721E-01	-0.2547720E-00	-0.3245352E-01	-0.3593355E-01	-0.3791349E-01	-0.3944084E-01
-0.6959379E-04	-0.	0.3781809E-03	-0.3095599E-01	-0.	-0.	-0.
-0.	0.1361185E-00	0.1318464E-00	0.7807335E-01	0.4094588E-01	-0.	0.1539171E-01
-0.8851723E-02	-0.3652209E-01	-0.5593184E-01	-0.7626458E-01	-0.9003322E-01	-0.8102304E-01	-0.4578242E-01
0.2014551E-01	0.1209999E-00	0.1000566E-00	0.8043088E-01	0.4043946E-14	0.7963000E-01	0.6077171E-01
0.3690599E-01	0.7956319E-02	-0.1527046E-01	-0.3024912E-01	-0.3028196E-01	-0.1163329E-01	0.2746693E-01
-0.4408898E-01	-0.3173522E-01	0.4958011E-14	-0.3133928E-01	-0.2089378E-01	-0.9328314E-02	0.3737622E-02
0.1389414E-01	0.2001532E-01	0.1926844E-01	0.1015248E-01	-0.7793202E-02	-0.1098877E-00	-0.7752294E-01
0.1068834E-13	-0.7657349E-01	-0.4991218E-01	-0.2188751E-01	0.8292074E-02	0.3065394E-01	0.4322587E-01
0.3977042E-01	0.1720849E-01	-0.2527628E-01	0.3398567E-01	0.3315229E-01	-0.2238227E-13	0.3295158E-01
0.2946240E-01	0.2146555E-01	0.9455071E-02	-0.1339024E-02	-0.9384016E-02	-0.1146294E-01	-0.5520445E-02
0.9660379E-02	0.1011174E-00	0.8716107E-01	-0.8482328E-14	0.8606256E-01	0.6326558E-01	0.3077451E-01
-0.8890401E-02	-0.4209833E-01	-0.6269484E-01	-0.6101540E-01	-0.3258776E-01	0.2122503E-01	0.4200400E-01
0.3527419E-01	0.1498393E-14	0.3468081E-01	0.2262780E-01	0.6006489E-02	-0.1286269E-01	-0.2749499E-01
-0.3501829E-01	-0.3169358E-01	-0.1640778E-01	0.9301487E-02	-0.1133241E-00	-0.9702159E-01	0.5825474E-15
-0.9594436E-01	-0.7292264E-01	-0.4173446E-01	-0.3479715E-02	0.2941323E-01	0.5126095E-01	0.5221496E-01
0.2727667E-01	-0.2285732E-01	-0.5461176E-01	-0.4033578E-01	-0.1802305E-14	-0.3992388E-01	-0.2783312E-01
-0.1172635E-01	0.8146263E-02	0.2484108E-01	0.3432428E-01	0.3222307E-01	0.1740252E-01	-0.8258959E-02
0.9385664E-03	0.9296635E-03	0.9039158E-03	0.9039162E-03	-0.5905463E-03	-0.1535319E-03	0.2863952E-01
0.2818596E-01	0.7380763E-01	0.7267317E-01	-0.2811563E-01	-0.2756575E-01	-0.7517608E-01	-0.7381619E-01
-0.1613669E-01	-0.2784381E-01	0.3453890E-01	0.6311224E-01	0.1643535E-01	0.2775589E-01	-0.3429495E-01
-0.6338216E-01	-0.1161845E-03	0.9107455E-03	0.1881894E-04	0.2852228E-05	0.5335131E-01	-0.9180749E-02
0.1827636E-00	0.1895159E-04	0.1221906E-02	-0.1192809E-04	0.6623281E-01	0.1722311E-00	-0.1334213E-02
0.2223992E-04	-0.4024051E-04	-0.1052671E-02	-0.5354490E-01	0.9316177E-02	-0.1826675E-00	-0.1560721E-04
-0.1231329E-02	0.1174330E-05	-0.6789557E-01	-0.1725579E-00	0.1154147E-02	-0.1567071E-04	0.2924266E-04
0.1021008E-02	0.2323522E-03	0.1710530E-00	-0.8846014E-03	0.6144038E-03	-0.5013448E-04	0.1020511E-02
0.1714331E-00	0.1040157E-01	0.3256918E-01	0.1013699E-03	-0.9846245E-03	0.3133487E-03	0.5628572E-03
-0.1710766E-00	0.7693698E-03	-0.6275984E-03	0.4932901E-04	-0.1025210E-02	-0.1714461E-00	-0.1022501E-01
-0.3266682E-01	-0.9403750E-04	0.9740892E-03	-0.3052441E-03			

0.2130652E-02	0.2243933E-02	0.2263191E-02	0.1972696E-02	0.1849682E-02	0.1405009E-02	0.1157176E-02
0.1131219E-02	0.9518015E-03	0.7048784E-03	0.6528747E-03	0.1115870E-03	-0.2231952E-03	-0.1593730E-03
-0.5200915E-03	-0.7387907E-03	-0.8841955E-03	-0.1132115E-02	-0.1073088E-02	-0.1185128E-02	-0.1120694E-02
-0.8155557E-03	-0.5270398E-03	0.1515570E-01	-0.7330290E-03	-0.3650749E-03	0.7828765E-04	0.5874559E-03
-0.	-0.	-0.1914985E-04	0.1515575E-02	-0.	-0.	-0.
-0.	-0.7177369E-02	-0.5151851E-02	-0.9054748E-02	-0.9727748E-02	-0.	-0.1042197E-01
-0.1134794E-01	-0.1277843E-01	-0.1350618E-01	-0.1321809E-01	-0.1145496E-01	-0.8880320E-02	-0.6511989E-02
-0.5120695E-02	-0.6716824E-02	0.1861946E-01	0.2161386E-01	-0.	0.2097141E-01	0.1362270E-01
0.1479755E-02	-0.8286960E-02	-0.1374105E-01	-0.1319847E-01	-0.7763356E-02	0.1159539E-02	0.1138026E-01
0.5645126E-01	0.6207872E-01	-0.	0.6071145E-01	0.3870549E-01	0.3942475E-02	-0.2417333E-01
-0.4029994E-01	-0.3906236E-01	-0.2346563E-01	0.2626484E-02	0.3370311E-01	-0.1951221E-01	-0.2108560E-01
-0.	-0.2066772E-01	-0.1271239E-01	-0.6539542E-03	0.8198011E-02	0.1338691E-01	0.1250042E-01
0.6877683E-02	-0.1772009E-02	-0.1167385E-01	-0.5517347E-01	-0.6198932E-01	-0.	-0.5965913E-01
-0.3839940E-01	-0.4089945E-02	0.2430735E-01	0.4063245E-01	0.3924368E-01	0.2354874E-01	-0.2351572E-02
-0.3358918E-01	-0.2472708E-01	-0.2371963E-01	0.	-0.2296778E-01	-0.1177562E-01	0.3617244E-02
0.1508525E-01	0.2026317E-01	0.1725051E-01	0.8425287E-02	-0.3962519E-02	-0.1748266E-01	0.4883635E-01
0.5439043E-01	0.	0.5328305E-01	0.3279886E-01	-0.6986895E-03	-0.2740755E-01	-0.4148007E-01
-0.3768785E-01	-0.2039607E-01	0.5154169E-02	0.3344823E-01	0.2309223E-01	0.2504932E-01	0.
0.2410908E-01	0.1389098E-01	-0.2208541E-02	-0.1447809E-01	-0.2048322E-01	-0.1789963E-01	-0.9102105E-02
0.3503159E-02	0.1731317E-01	-0.5104275E-01	-0.5579675E-01	0.	-0.5238632E-01	-0.3100631E-01
0.1553912E-02	0.2727352E-01	0.4071772E-01	0.3639261E-01	0.1927557E-01	-0.5849077E-02	-0.3375274E-01
0.2297897E-00	0.2218504E-00	0.2056236E-00	0.1896107E-00	0.1737888E-00	0.1574308E-00	0.1414713E-00
0.1262869E-00	0.1101506E-00	0.9515136E-01	0.8224140E-01	0.6591019E-01	0.5148868E-01	0.3832855E-01
0.2439228E-01	0.1192815E-01	-0.3248751E-03	-0.1146993E-01	-0.2006498E-01	-0.2608003E-01	-0.2938367E-01
-0.3087928E-01	-0.3146935E-01	0.1193442E-00	-0.3108604E-01	-0.3172375E-01	-0.3073296E-01	-0.2935951E-01
-0.2830621E-04	0.	0.4116611E-03	-0.3664993E-01	0.	0.	0.
0.	0.8835127E-02	0.4753173E-01	0.4348868E-01	0.6552393E-01	0.	0.7057309E-01
0.6019017E-01	0.1182635E-01	-0.4419163E-01	-0.9142824E-01	-0.1049472E-00	-0.8084254E-01	-0.3458628E-01
0.2495126E-01	0.1343690E-00	0.7760800E-01	0.8651700E-01	-0.2820082E-13	0.8537546E-01	0.6887637E-01
0.3500442E-01	-0.7363480E-03	-0.3158899E-01	-0.4629219E-01	-0.4175270E-01	-0.1616705E-01	0.2493619E-01
-0.2341226E-01	-0.3588759E-01	0.8599235E-13	-0.3553369E-01	-0.3396337E-01	-0.2219572E-01	-0.7430609E-02
0.6920663E-02	0.1561145E-01	0.1667863E-01	0.8636771E-02	-0.7066418E-02	-0.6692667E-01	-0.8416962E-01
0.2240558E-12	-0.8296842E-01	-0.6947986E-01	-0.3579044E-01	0.4678974E-03	0.3150286E-01	0.4583546E-01
0.4080613E-01	0.1513084E-01	-0.2574729E-01	0.3406016E-01	0.3857592E-01	-0.7168813E-12	0.3822130E-01
0.3347180E-01	0.2161847E-01	0.7330622E-02	-0.7076811E-02	-0.1617241E-01	-0.1765242E-01	-0.9725003E-02
0.6257935E-02	0.8259534E-01	0.1041789E-00	-0.7398490E-13	0.1028734E-00	0.9038385E-01	0.5128295E-01
0.3451649E-02	-0.4073675E-01	-0.6502456E-01	-0.6358836E-01	-0.3431289E-01	0.1666435E-01	0.4088691E-01
0.4421316E-01	0.8390844E-13	0.4334555E-01	0.3104109E-01	0.7783534E-02	-0.1699015E-01	-0.3705220E-01
-0.4520734E-01	-0.3959451E-01	-0.2066123E-01	0.6985138E-02	-0.7256615E-01	-0.9950808E-01	0.5520329E-13
-0.9834914E-01	-0.8906209E-01	-0.5095695E-01	-0.2823621E-02	0.4174643E-01	0.6583786E-01	0.6381896E-01
0.3402585E-01	-0.1714273E-01	-0.3497767E-01	-0.5154251E-01	-0.7663287E-13	-0.5033096E-01	-0.3625611E-01
-0.8288075E-02	0.1934667E-01	0.3971872E-01	0.4709349E-01	0.4055048E-01	0.2085866E-01	-0.7254317E-02
0.1331199E-02	0.1285266E-02	0.1128423E-02	0.1128423E-02	0.2339974E-03	-0.2461724E-03	0.3095674E-01
0.3073691E-01	0.8477386E-01	0.8415965E-01	-0.3110580E-01	-0.3085728E-01	-0.8543664E-01	-0.8466553E-01
-0.2601998E-01	-0.3320321E-01	0.6290826E-01	0.7409117E-01	0.2573468E-01	0.3290121E-01	-0.6326165E-01
-0.7438591E-01	-0.2105965E-03	0.8184170E-03	0.3045676E-04	-0.3178200E-05	0.4378183E-01	-0.1529454E-01
0.1919220E-00	0.7005813E-04	0.1464006E-02	-0.3645689E-04	0.6158191E-01	0.1793909E-00	-0.1866142E-02
0.1835854E-03	0.9767915E-04	-0.1213361E-02	-0.4395215E-01	0.1547980E-01	-0.1919462E-00	-0.7699943E-04
-0.1456333E-02	0.3252892E-04	-0.6196883E-01	-0.1793623E-00	0.1689908E-02	-0.1907239E-03	-0.9253062E-04
0.1215994E-02	-0.3208963E-02	0.1734473E-00	-0.1716784E-02	0.4192522E-03	-0.5196335E-05	0.1346962E-02
0.1732170E-00	0.1513712E-01	0.3652493E-01	0.1541001E-03	-0.1258423E-02	0.4005386E-03	0.3078817E-02
-0.1737836E-00	0.1170473E-02	-0.4238193E-03	0.1179706E-04	-0.1358253E-02	-0.1733879E-00	-0.1523160E-01
-0.3704836E-01	-0.1488876E-03	0.1260298E-02	-0.4012930E-03			

SA-5 RUN #2 MODE 22 XN = .3876284

0.2015448E-02	0.2012699E-02	0.1910872E-02	0.1661359E-02	0.1487874E-02	0.1156158E-02	0.9120349E-03
0.7698362E-03	0.5521367E-03	0.2989504E-03	0.1380623E-03	-0.2566642E-03	-0.5561353E-03	-0.6634378E-03
-0.9736423E-03	-0.1214329E-02	-0.1419253E-02	-0.1667249E-02	-0.1757965E-02	-0.1912275E-02	-0.1966192E-02
-0.1888838E-02	-0.1807999E-02	-0.2750913E-02	-0.1874109E-02	-0.1780571E-02	-0.1610239E-02	-0.1397587E-02
0.	0.	0.7558628E-04	-0.1385115E-02	0.	0.	0.
0.	0.5769987E-02	0.5743827E-02	0.5794750E-02	0.5980434E-02	0.	0.6148657E-02
0.6390662E-02	0.6909912E-02	0.7443986E-02	0.7840283E-02	0.7581086E-02	0.6455189E-02	0.4940598E-02
0.3379159E-02	0.3638306E-02	-0.3279661E-01	-0.2467647E-01	0.	-0.2450202E-01	-0.1782079E-01
-0.8683852E-02	0.3431573E-02	0.1366827E-01	0.1907408E-01	0.1660683E-01	0.5867086E-02	-0.1087708E-01
-0.9075780E-01	-0.6680050E-01	0.	-0.6605704E-01	-0.4659546E-01	-0.2129265E-01	0.1091566E-01
0.3756182E-01	0.5099486E-01	0.4354049E-01	0.1443612E-01	-0.2987639E-01	0.3102089E-01	0.2359411E-01
0.	0.2331435E-01	0.1705166E-01	0.8227530E-02	-0.3747738E-02	-0.1345362E-01	-0.1845436E-01
-0.1574656E-01	-0.4873996E-02	0.1175451E-01	0.9120385E-01	0.6633439E-01	0.	0.6604925E-01
0.4611175E-01	0.2074414E-01	-0.1101533E-01	-0.3723816E-01	-0.5054356E-01	-0.4317682E-01	-0.1429555E-01
0.2943975E-01	0.3844987E-01	0.2375251E-01	-0.	0.2343693E-01	0.1293306E-01	0.2695947E-02
-0.8337160E-02	-0.1668244E-01	-0.2001134E-01	-0.1538360E-01	-0.2814865E-02	0.1513359E-01	-0.8843298E-01
-0.6127014E-01	-0.	-0.6044354E-01	-0.4001607E-01	-0.1681381E-01	0.1237477E-01	0.3721506E-01
0.5019208E-01	0.4271355E-01	0.1382430E-01	-0.2986537E-01	-0.4231164E-01	-0.2613089E-01	-0.
-0.2589846E-01	-0.1466292E-01	-0.4010384E-02	0.7947735E-02	0.1743287E-01	0.2178981E-01	0.1760535E-01
0.4618834E-02	-0.1446280E-01	0.8477946E-01	0.5877011E-01	-0.	0.5810178E-01	0.3820668E-01
0.1527423E-01	-0.1300359E-01	-0.3647986E-01	-0.4838051E-01	-0.4034456E-01	-0.1185444E-01	0.3059653E-01
-0.2341018E-00	-0.2254732E-00	-0.2084171E-00	-0.1913724E-00	-0.1744738E-00	-0.1581717E-00	-0.1420342E-00
-0.1257474E-00	-0.1101615E-00	-0.9453720E-01	-0.7937264E-01	-0.6484316E-01	-0.5585041E-01	-0.3678676E-01
-0.2376508E-01	-0.1077749E-01	0.1369728E-02	0.1260534E-01	0.2137436E-01	0.2770388E-01	0.3243210E-01
0.3557865E-01	0.3778859E-01	0.2228647E-00	0.3661738E-01	0.3940071E-01	0.4088410E-01	0.4183139E-01
0.4383345E-04	-0.	-0.4752021E-03	0.3290120E-01	-0.	-0.	-0.
-0.	-0.1230691E-00	-0.1046511E-00	-0.8347348E-01	-0.5525628E-01	-0.	-0.3617994E-01
-0.1775380E-01	0.7449562E-02	0.3418921E-01	0.7198147E-01	0.1078990E-00	0.1114294E-00	0.7560504E-01
-0.6374666E-02	-0.1217711E-00	-0.6718393E-01	-0.3138027E-01	-0.9125984E-14	-0.3087836E-01	-0.1212236E-01
-0.4983724E-02	-0.3084340E-02	-0.4997551E-02	-0.4606768E-02	-0.3637888E-02	-0.8642490E-02	-0.3388206E-01
0.2666324E-01	0.1171264E-01	0.8366934E-14	0.1159703E-01	0.4915382E-02	0.3488506E-02	0.3561833E-02
0.4173473E-02	0.2911637E-02	0.9605397E-03	0.1765741E-02	0.1197223E-01	0.7310955E-01	0.3096252E-01
0.2436624E-13	0.3054220E-01	0.9852094E-02	0.3650081E-02	0.3716015E-02	0.7229431E-02	0.7503874E-02
0.6316359E-02	0.1053678E-01	0.3475397E-01	-0.2151210E-01	-0.1268257E-01	-0.9201786E-13	-0.1254736E-01
-0.7759878E-02	-0.5281522E-02	-0.3347195E-02	-0.2394236E-02	-0.4307403E-03	0.1393057E-02	-0.1088306E-03
-0.1119598E-01	-0.8088700E-01	-0.7223752E-01	-0.2408111E-14	-0.7160439E-01	-0.5770384E-01	-0.3700377E-01
-0.8585134E-02	0.1844020E-01	0.3885413E-01	0.4291096E-01	0.2266731E-01	-0.2656326E-01	-0.3601591E-01
-0.3063656E-01	0.1166141E-13	-0.3015833E-01	-0.2045196E-01	-0.7244269E-02	0.8081556E-02	0.2061234E-01
0.2782852E-01	0.2615793E-01	0.1345895E-01	-0.1081536E-01	0.8480168E-01	0.7136894E-01	0.8207760E-14
0.7060628E-01	0.5360190E-01	0.3238357E-01	0.5558568E-02	-0.1911099E-01	-0.3756437E-01	-0.4060845E-01
-0.2039552E-01	0.2801872E-01	0.4149144E-01	0.2959664E-01	-0.1011808E-13	0.2939533E-01	0.2155635E-01
0.1015218E-01	-0.6369154E-02	-0.2223468E-01	-0.3255173E-01	-0.3203256E-01	-0.1808856E-01	0.9006039E-02
-0.2322306E-02	-0.2272148E-02	-0.2111421E-02	-0.2111422E-02	0.7173755E-03	0.3329871E-03	-0.3081662E-01
-0.3031380E-01	-0.7941179E-01	-0.7815802E-01	0.3052334E-01	0.2991514E-01	0.8149453E-01	0.7995577E-01
0.1882532E-01	0.2992946E-01	-0.4154110E-01	-0.6846229E-01	-0.1899910E-01	-0.2937361E-01	0.4119826E-01
0.6893415E-01	0.2921733E-03	-0.9451119E-03	-0.1682111E-04	0.4858657E-05	-0.5590569E-01	0.8708490E-02
-0.1915746E-00	-0.3622515E-04	-0.1301382E-02	0.9672369E-04	-0.6843844E-01	-0.1815172E-00	0.4592212E-02
-0.2422228E-04	0.3339709E-04	0.9532475E-03	0.5507736E-01	-0.9921773E-02	0.1927200E-00	0.4888820E-04
0.1310324E-02	-0.6703166E-04	0.6957699E-01	0.1809524E-00	-0.3014157E-02	0.3471941E-04	-0.1868930E-04
-0.9634951E-03	-0.7794348E-02	-0.1900611E-00	-0.2163798E-03	-0.9130500E-03	0.2449036E-03	-0.2105160E-02
-0.1721932E-00	-0.1366537E-01	-0.3605522E-01	-0.1673818E-03	0.9817306E-03	-0.4956508E-03	0.7831914E-02
0.1908717E-00	0.9950878E-03	0.9239835E-03	-0.2589123E-03	0.2148907E-02	0.1728930E-00	0.1425554E-01
0.3676964E-01	0.1495023E-03	-0.9808962E-03	0.5287590E-03			

007

0.2607078E-02	0.2571783E-02	0.2283106E-02	0.1668873E-02	0.1257444E-02	0.5200719E-03	0.2652502E-04
-0.2076656E-03	-0.5919161E-03	-0.1026275E-02	-0.1213255E-02	-0.1897782E-02	-0.2342102E-02	-0.2327140E-02
-0.2753147E-02	-0.2995917E-02	-0.3128571E-02	-0.3326119E-02	-0.3091008E-02	-0.2954303E-02	-0.2565946E-02
-0.1875659E-02	-0.1185998E-02	0.6801657E-02	-0.1628739E-02	-0.6320479E-03	0.2293985E-03	0.1157955E-02
-0.	-0.	-0.1021408E-03	0.2579237E-02	-0.	-0.	-0.
-0.	0.3942359E-02	0.4297291E-02	0.3300575E-02	0.3065641E-02	-0.	0.2731604E-02
0.2169692E-02	0.9668770E-03	-0.1883524E-03	-0.1212512E-02	-0.1721511E-02	-0.1571699E-02	-0.1063553E-02
-0.3853106E-03	0.3400192E-03	-0.7119120E-01	-0.2486523E-01	-0.	-0.2429521E-01	0.1113155E-02
0.1016373E-01	0.1060760E-01	0.4585770E-02	0.1017494E-02	-0.1400881E-02	-0.4568344E-02	-0.1036863E-01
-0.1785418E-00	-0.6237425E-01	-0.	-0.6051020E-01	0.2460608E-02	0.2407303E-01	0.2412597E-01
0.8338392E-02	-0.2640922E-03	-0.5355656E-02	-0.1222857E-01	-0.2521881E-01	0.6816417E-01	0.2373384E-01
-0.	0.2294591E-01	-0.1159411E-02	-0.9584324E-02	-0.1047903E-01	-0.4388079E-02	-0.1030523E-02
0.1152304E-02	0.4397546E-02	0.1016672E-01	0.1785703E-00	0.6195320E-01	-0.	0.6115035E-01
-0.2343786E-02	-0.2425924E-01	-0.2406062E-01	-0.8187194E-02	0.1138781E-03	0.5076208E-02	0.1233153E-01
0.2546293E-01	0.7551082E-01	0.2878407E-01	0.	0.2809459E-01	0.1834914E-02	-0.8479872E-02
-0.9524595E-02	-0.3268370E-02	0.4794104E-03	0.2977785E-02	0.5927428E-02	0.1102758E-01	-0.1869284E-00
-0.6809527E-01	0.	-0.6579424E-01	0.2029151E-02	0.2835496E-01	0.3036647E-01	0.1365843E-01
0.2860047E-02	-0.4263632E-02	-0.1249632E-01	-0.2612145E-01	-0.8535662E-01	-0.3259272E-01	0.
-0.3197939E-01	-0.1797515E-02	0.1013102E-01	0.1154594E-01	0.4569595E-02	-0.6446622E-04	-0.3124977E-02
-0.6180014E-02	-0.1108683E-01	0.1766723E-00	0.6387737E-01	0.	0.6203125E-01	-0.1922450E-02
-0.2695950E-01	-0.2897962E-01	-0.1291725E-01	-0.3175360E-02	0.3613950E-02	0.1199869E-01	0.2593173E-01
0.1296005E-01	0.1152624E-01	0.8303520E-02	0.5272697E-02	0.2347687E-02	-0.1313741E-02	-0.4646803E-02
-0.7219813E-02	-0.1089470E-01	-0.1353864E-01	-0.1622651E-01	-0.1853865E-01	-0.2108701E-01	-0.2247404E-01
-0.2486673E-01	-0.2586580E-01	-0.2688235E-01	-0.2714167E-01	-0.2564525E-01	-0.2233123E-01	-0.1685578E-01
-0.1008145E-01	-0.2671798E-02	0.6010730E 00	-0.6920016E-02	0.4944486E-02	0.1371332E-01	0.2276529E-01
0.1888890E-04	0.	-0.4754495E-03	0.1899795E-01	0.	0.	0.
0.	-0.2221993E-00	-0.2594411E-01	-0.3799975E-01	0.6629632E-01	0.	0.1321782E-00
0.1812660E-00	0.1879380E-00	0.1327968E-00	0.4481570E-01	-0.3400885E-01	-0.6656859E-01	-0.6687402E-01
-0.5073174E-01	-0.2099841E-01	-0.1425406E-00	-0.4810796E-01	-0.8059989E-15	-0.4649604E-01	0.8044252E-02
0.3189390E-01	0.4052553E-01	0.3228119E-01	0.2488087E-01	0.1217993E-01	-0.6476663E-02	-0.2388715E-01
0.6904984E-01	0.2578175E-01	-0.6678711E-15	0.2502383E-01	0.1162289E-04	-0.1064916E-01	-0.1437049E-01
-0.1086270E-01	-0.7748308E-02	-0.2587668E-02	0.4859367E-02	0.1123818E-01	0.1629605E-00	0.5710177E-01
-0.5625293E-15	0.5530019E-01	-0.6329643E-02	-0.3404211E-01	-0.4391091E-01	-0.3524790E-01	-0.2686916E-01
-0.1306854E-01	0.6742236E-02	0.2497018E-01	-0.4862213E-01	-0.1653132E-01	-0.5399291E-16	-0.1598537E-01
0.1702738E-02	0.8875110E-02	0.1162473E-01	0.8433573E-02	0.6246655E-02	0.2109607E-02	-0.4466284E-02
-0.1012215E-01	-0.1486401E-00	-0.6763576E-01	-0.1674176E-15	-0.6563849E-01	-0.8158707E-02	0.2207428E-01
0.3329301E-01	0.2364097E-01	0.1494405E-01	0.5080943E-02	-0.6998757E-02	-0.2024980E-01	-0.5714783E-01
-0.2544781E-01	0.5924290E-15	-0.2471789E-01	-0.2759283E-02	0.8202189E-02	0.1187457E-01	0.7561393E-02
0.4273124E-02	0.8592549E-03	-0.3405988E-02	-0.8482778E-02	0.1660557E-00	0.7912098E-01	0.1413747E-15
0.7687542E-01	0.1449735E-01	-0.1953477E-01	-0.3289171E-01	-0.2401215E-01	-0.1536030E-01	-0.5131942E-02
0.7544101E-02	0.2136290E-01	0.7160566E-01	0.1525194E-01	-0.1368139E-16	0.1458575E-01	-0.1256415E-01
-0.1997367E-01	-0.1728570E-01	-0.7867070E-02	-0.1592470E-02	0.2781346E-02	0.6585045E-02	0.1074047E-01
-0.7177406E-04	-0.1656918E-03	-0.4772784E-03	-0.4772788E-03	0.2307455E-02	0.3779163E-03	0.1111454E-01
0.1132275E-01	0.2593787E-01	0.2635594E-01	-0.1098578E-01	-0.1121548E-01	-0.2641012E-01	-0.2690552E-01
-0.2480100E-01	-0.1306125E-01	0.6539375E-01	0.3447816E-01	0.2384033E-01	0.1277920E-01	-0.6639130E-01
-0.3476766E-01	0.8246789E-04	-0.7848533E-04	-0.6089193E-05	0.2173020E-05	-0.2330054E-02	-0.1075986E-01
-0.6652631E-02	0.8659686E-04	0.5088472E-03	-0.2550587E-03	-0.8017488E-02	-0.1878671E-01	-0.1345928E-01
0.2587662E-03	0.9119280E-04	0.3434677E-04	0.2881165E-02	0.1108587E-01	0.6708189E-02	-0.8788635E-04
-0.5178219E-03	0.2428524E-03	0.7897497E-02	0.1888014E-01	0.1334887E-01	-0.2583557E-03	-0.1009413E-03
-0.3486948E-04	0.9573637E-02	-0.1515626E-01	0.1246553E-02	0.2562038E-03	-0.2558143E-03	0.1594744E-02
-0.3642739E-01	0.7334349E-02	0.1301130E-01	0.1990083E-03	-0.4018692E-03	0.3624322E-03	-0.9483927E-02
0.1521164E-01	-0.8840340E-03	-0.2590079E-03	0.2582176E-03	-0.1602744E-02	0.3619051E-01	-0.7268567E-02
-0.1262779E-01	-0.1930840E-03	0.3996871E-03	-0.3671417E-03			

SA-5 RUN #3 MODE 1 XN = 30.86438

0.1305612E-02	0.1287725E-02	0.1252099E-02	0.1216719E-02	0.1181314E-02	0.1146229E-02	0.1111164E-02
0.1076647E-02	0.1041121E-02	0.1006449E-02	0.9728365E-03	0.9384171E-03	0.9049539E-03	0.8715661E-03
0.8388471E-03	0.8065190E-03	0.7747345E-03	0.7439472E-03	0.7154221E-03	0.6895314E-03	0.6655755E-03
0.6432423E-03	0.6219472E-03	0.9227632E-03	0.6542438E-03	0.6013335E-03	0.5811439E-03	0.5615447E-03
0.	0.	-0.8927677E-04	0.5257751E-03	0.	0.	0.
0.	-0.5325478E-03	-0.5288674E-03	-0.5556184E-03	-0.5622728E-03	0.	-0.5659195E-03
-0.5639701E-03	-0.5399802E-03	-0.4990686E-03	-0.4506740E-03	-0.2641951E-03	-0.1114229E-03	0.4216168E-04
0.1857620E-03	0.3480710E-03	0.1883196E-01	0.1655458E-01	0.	0.1645857E-01	0.1415507E-01
0.1157925E-01	0.8753732E-02	0.5840346E-02	0.2622157E-02	-0.7139063E-03	-0.4175619E-02	-0.7715751E-02
0.4593692E-01	0.3969458E-01	0.	0.3847567E-01	0.3139993E-01	0.2404845E-01	0.1656431E-01
0.9263197E-02	0.1888855E-02	-0.5443980E-02	-0.1272485E-01	-0.1996287E-01	-0.1870208E-01	-0.1617807E-01
0.	-0.1607407E-01	-0.1357374E-01	-0.1185627E-01	-0.7966293E-02	-0.5027183E-02	-0.1935402E-02
0.1251674E-02	0.4511344E-02	0.7816996E-02	-0.4593635E-01	-0.3872345E-01	0.	-0.3843551E-01
-0.3144675E-01	-0.2410599E-01	-0.1662546E-01	-0.9520233E-02	-0.1934982E-02	0.5414068E-02	0.1271488E-01
0.1997534E-01	-0.1952331E-01	-0.1671201E-01	-0.	-0.1659768E-01	-0.1383815E-01	-0.1088425E-01
-0.7801300E-02	-0.4714330E-02	-0.1523383E-02	0.1714027E-02	0.4980565E-02	0.8260699E-02	0.4584693E-01
0.3919425E-01	-0.	0.3892449E-01	0.3241414E-01	0.2546922E-01	0.1823554E-01	0.1100918E-01
0.3533128E-02	-0.4061778E-02	-0.1173769E-01	-0.1945567E-01	-0.1960508E-01	0.1695443E-01	-0.
0.1684621E-01	0.1421444E-01	0.1135419E-01	0.8510997E-02	0.5206881E-02	0.1943595E-02	-0.1414452E-02
-0.4839363E-02	-0.8300255E-02	-0.4581899E-01	-0.3916637E-01	-0.	-0.3889681E-01	-0.3238468E-01
-0.2543379E-01	-0.1819080E-01	-0.1095167E-01	-0.3462275E-02	0.4150511E-02	0.1184207E-01	0.1957511E-01
0.1484579E-00	0.1467117E-00	0.1432199E-00	0.1397285E-00	0.1362383E-00	0.1327503E-00	0.1292642E-00
0.1257789E-00	0.1222958E-00	0.1188157E-00	0.1153393E-00	0.1118703E-00	0.1084056E-00	0.1049444E-00
0.1014897E-00	0.9804066E-01	0.9459995E-01	0.9117140E-01	0.8777592E-01	0.8441405E-01	0.8107889E-01
0.7776724E-01	0.7446928E-01	-0.1443243E-01	0.7037992E-01	0.7117946E-01	0.6789701E-01	0.6462284E-01
-0.2875165E-05	-0.	-0.7584649E-01	0.5669953E-01	-0.	-0.	-0.
-0.	0.5035086E-01	0.5446484E-01	0.4545145E-01	0.4237573E-01	-0.	0.3966744E-01
0.3621058E-01	0.3001037E-01	0.2376248E-01	0.1607499E-01	0.6918806E-02	-0.2303653E-02	-0.1155886E-01
-0.2082585E-01	-0.3362650E-01	0.4654130E-01	0.4129180E-01	0.5849707E-18	0.4002769E-01	0.3373262E-01
0.2677802E-01	0.1932141E-01	0.1174070E-01	0.3678965E-02	-0.4051039E-02	-0.1194411E-01	-0.1971636E-01
-0.1869821E-01	-0.1640841E-01	0.3934181E-18	-0.1631333E-01	-0.1402582E-01	-0.1149027E-01	-0.8705276E-02
-0.5760044E-02	-0.2542777E-02	0.8587034E-03	0.4343775E-02	0.7769491E-02	-0.4570046E-01	-0.3835179E-01
0.6239940E-18	-0.3806281E-01	-0.3102150E-01	-0.2372102E-01	-0.1635248E-01	-0.9180032E-02	-0.1899241E-02
0.5399797E-02	0.1270045E-01	0.1997771E-01	0.1834871E-01	0.1496068E-01	0.5995225E-18	0.1482871E-01
0.1161153E-01	0.8347737E-02	0.5184151E-02	0.2281324E-02	-0.4713608E-03	-0.3068315E-02	-0.5597926E-02
-0.8193069E-02	0.4563138E-01	0.3849669E-01	-0.1751091E-18	0.3821433E-01	0.3134738E-01	0.2414960E-01
0.1687035E-01	0.9598935E-02	0.2281333E-02	-0.5042798E-02	-0.1237438E-01	-0.1972279E-01	0.1955830E-01
0.1665493E-01	0.1663862E-02	0.1653977E-01	0.1373536E-01	0.1075481E-01	0.7653587E-02	0.4554990E-02
0.1363864E-02	-0.1858925E-02	-0.5098640E-02	-0.8344619E-02	-0.4541989E-01	-0.3833589E-01	0.2322101E-19
-0.3805895E-01	-0.3129157E-01	-0.2421733E-01	-0.1697623E-01	-0.9834355E-02	-0.2509904E-02	0.4877594E-02
0.1228683E-01	0.1967550E-01	-0.1930572E-01	-0.1635379E-01	0.9175732E-20	-0.1623363E-01	-0.1337829E-01
-0.1136763E-01	-0.7268725E-02	-0.4198487E-02	-0.1049289E-02	0.2123176E-02	0.5284105E-02	0.8407369E-02
0.5905283E-05	0.5911226E-05	0.5930371E-05	0.5930372E-05	-0.5790593E-05	-0.3324724E-05	-0.4021063E-02
-0.4025769E-02	-0.1007099E-01	-0.1006936E-01	0.4061194E-02	0.4060612E-02	0.1003231E-01	0.1003048E-01
0.4194453E-02	0.4318642E-02	-0.9922944E-02	-0.1105148E-01	-0.4067471E-02	-0.4115569E-02	0.9800848E-02
0.9849572E-02	-0.1455990E-05	-0.1073854E-05	-0.1175227E-05	-0.5067013E-09	-0.6867875E-02	0.2256362E-03
-0.3846232E-01	0.1910891E-05	-0.1061470E-05	-0.1274653E-06	-0.7800991E-02	-0.3889031E-01	-0.1529763E-04
0.2193911E-05	0.4585817E-05	0.1086007E-05	0.6719554E-02	-0.6353716E-03	0.3897161E-01	0.2023542E-05
0.1105746E-03	0.2097997E-05	0.7924401E-02	0.3851122E-01	0.7848396E-03	0.2632551E-05	0.6788783E-05
-0.1065583E-03	0.4812496E-03	-0.3795887E-01	0.2913861E-05	-0.1065377E-03	-0.1631179E-05	0.3482161E-05
-0.3815752E-01	-0.3154873E-03	-0.4489692E-02	-0.3235657E-05	0.1088068E-03	0.3456394E-05	-0.2853420E-03
0.3818698E-01	-0.2869407E-03	0.1078239E-05	0.3445455E-06	0.8133594E-05	0.3798871E-01	0.5305615E-03
0.4469328E-02	0.5772857E-06	-0.1074437E-05	0.5423305E-05			

SA-5 RUN #3 MODE 2 XN = 28 09667

0.1581176E-00	0.1562127E-00	0.1524036E-00	0.1485959E-00	0.1447905E-00	0.1409883E-00	0.1371899E-00
0.1333939E-00	0.1296003E-00	0.1258123E-00	0.1220337E-00	0.1182676E-00	0.1145084E-00	0.1107573E-00
0.1070163E-00	0.1032872E-00	0.9957261E-01	0.9588122E-01	0.9225900E-01	0.8868074E-01	0.8516152E-01
0.8168533E-01	0.7823406E-01	-0.3252137E-02	0.8023295E-01	0.7479727E-01	0.7137502E-01	0.6796772E-01
0.	0.	-0.7415259E-03	0.5972311E-01	0.	0.	0.
0.	0.4156174E-01	0.4562347E-01	0.3673245E-01	0.3374226E-01	0.	0.3114061E-01
0.2787286E-01	0.2217939E-01	0.1665693E-01	0.1010567E-01	0.2552327E-02	-0.4913826E-02	-0.1240133E-01
-0.1998592E-01	-0.3077764E-01	0.4017662E-01	0.3898173E-01	0.	0.3889238E-01	0.3698259E-01
0.3376895E-01	0.2893911E-01	0.2270867E-01	0.1490210E-01	0.5770833E-02	-0.4463335E-02	-0.1541301E-01
-0.2044269E-01	-0.2452523E-01	0.	-0.2462423E-01	-0.2740690E-01	-0.2850654E-01	-0.2736657E-01
-0.2407789E-01	-0.1868985E-01	-0.1150498E-01	-0.2854239E-02	0.6730344E-02	-0.3876098E-01	-0.3485256E-01
0.	-0.3468118E-01	-0.3069771E-01	-0.2583751E-01	-0.2030143E-01	-0.1422364E-01	-0.7364370E-02
0.1257142E-03	0.8150541E-02	0.1652704E-01	0.2034578E-01	0.2418832E-01	0.	0.2427990E-01
0.2687782E-01	0.2785722E-01	0.2668149E-01	0.2344190E-01	0.1817470E-01	0.1116940E-01	0.2741606E-02
-0.6594720E-02	0.3838443E-01	0.3199170E-01	-0.	0.3173951E-01	0.2560155E-01	0.1919815E-01
0.1266142E-01	0.6262194E-02	-0.2990827E-03	-0.6924353E-02	-0.1360166E-01	-0.2030936E-01	0.1493971E-01
0.1296774E-01	-0.	0.1289079E-01	0.1099785E-01	0.9012054E-02	0.6947330E-02	0.4875284E-02
0.2669692E-02	0.3494866E-03	-0.2084633E-02	-0.4601463E-02	-0.3761037E-01	-0.2944589E-01	-0.
-0.2913920E-01	-0.2157753E-01	-0.1413704E-01	-0.7149004E-02	-0.9247558E-03	0.4856205E-02	0.1017317E-01
0.1512951E-01	0.1987143E-01	-0.1479807E-01	-0.1261409E-01	-0.	-0.1273494E-01	-0.1080572E-01
-0.8742752E-02	-0.6559145E-02	-0.4328234E-02	-0.1939320E-02	0.5750991E-03	0.3201710E-02	0.5902985E-02
0.4767859E-02	0.4721359E-02	0.4628858E-02	0.4536318E-02	0.4444704E-02	0.4351992E-02	0.4260343E-02
0.4170190E-02	0.4078846E-02	0.3989736E-02	0.3900222E-02	0.3813238E-02	0.3726837E-02	0.3642427E-02
0.3557385E-02	0.3476052E-02	0.3395681E-02	0.3317079E-02	0.3247738E-02	0.3186235E-02	0.3131681E-02
0.3082929E-02	0.3037180E-02	0.3895131E-02	0.3063281E-02	0.2993317E-02	0.2952078E-02	0.2911987E-02
-0.2827084E-04	-0.	-0.3056144E-03	0.2805894E-02	-0.	-0.	-0.
-0.	-0.1027678E-02	-0.1255597E-02	-0.6978501E-03	-0.4994578E-03	-0.	-0.3200649E-03
-0.8597200E-04	0.3397687E-03	0.7590946E-03	0.1237125E-02	0.1726148E-02	0.2116332E-02	0.2415171E-02
0.2612773E-02	0.2856449E-02	-0.1164242E-01	-0.1951329E-02	0.1039879E-16	-0.1671884E-02	0.5803366E-02
0.1102307E-01	0.1367303E-01	0.1424546E-01	0.1371222E-01	0.1274892E-01	0.1192264E-01	0.1169954E-01
-0.3917789E-01	-0.3862975E-01	0.6465099E-17	-0.3858154E-01	-0.3751651E-01	-0.3529683E-01	-0.3126043E-01
-0.2524307E-01	-0.1688511E-01	-0.6651597E-02	0.4540844E-02	0.1531415E-01	0.2090922E-01	0.2320342E-01
0.9759121E-17	0.2320672E-01	0.2387212E-01	0.2244928E-01	0.1888509E-01	0.1390826E-01	0.8127621E-02
0.2173202E-02	-0.3570893E-02	-0.8868111E-02	0.3554389E-01	0.2288438E-01	0.8341707E-17	0.2242962E-01
0.1113056E-01	0.9132491E-03	-0.7238860E-02	-0.1273584E-01	-0.1595785E-01	-0.1738951E-01	-0.1819827E-01
-0.1997931E-01	0.1573650E-01	0.1267642E-01	-0.2554354E-17	0.1254948E-01	0.9536217E-02	0.6498463E-02
0.3705524E-02	0.1383481E-02	-0.5400906E-03	-0.2169300E-02	-0.3812817E-02	-0.5785322E-02	-0.3660269E-01
-0.2927429E-01	-0.1765467E-19	-0.2899168E-01	-0.2209298E-01	-0.1523492E-01	-0.8677922E-02	-0.2647452E-02
0.3261712E-02	0.9031021E-02	0.1465780E-01	0.2115564E-01	-0.1328429E-01	-0.1086714E-01	0.4675269E-18
-0.1080225E-01	-0.8955536E-02	-0.7316818E-02	-0.5714860E-02	-0.4016975E-02	-0.1974570E-02	0.3749556E-03
0.2853725E-02	0.5232750E-02	0.3949129E-01	0.3262695E-01	0.1690913E-18	0.3234662E-01	0.2591444E-01
0.1932599E-01	0.1273252E-01	0.6431319E-02	0.1312904E-03	-0.6158926E-02	-0.1264633E-01	-0.1950976E-01
0.4205313E-05	0.4274491E-05	0.4497032E-05	0.4497033E-05	-0.1573423E-04	-0.1941697E-04	-0.8315920E-02
-0.8318147E-02	0.3637323E-02	0.3637794E-02	0.8762675E-02	0.8762568E-02	-0.4050251E-02	-0.4049673E-02
-0.8513163E-02	-0.7762470E-02	-0.4294800E-02	-0.4553273E-02	0.9880855E-02	0.9991087E-02	0.2947607E-02
0.2352065E-02	-0.5989616E-05	0.2200064E-05	0.9218261E-04	-0.2196689E-07	-0.7321575E-02	-0.3710861E-01
0.5607936E-02	0.2037113E-04	0.2401199E-04	0.1016465E-03	0.6894162E-02	0.9729807E-03	0.3907221E-01
0.2553850E-04	0.1534645E-03	0.5634021E-05	0.5736647E-02	0.3281863E-01	-0.3291480E-03	0.2040535E-04
0.2357450E-04	-0.8253988E-04	-0.5510165E-02	-0.4926585E-02	-0.3094559E-01	0.2497779E-04	-0.3282859E-04
0.1414292E-04	-0.3346161E-01	0.4196170E-02	-0.3738849E-02	0.9022514E-05	0.8416721E-04	0.6455818E-04
0.1930965E-02	0.3561799E-01	-0.2338910E-03	0.7416354E-04	0.7325274E-05	0.4658578E-04	0.3561022E-01
-0.1755530E-02	0.3816577E-02	0.5471367E-05	-0.9862742E-04	0.6139595E-04	-0.3768264E-02	-0.3335660E-01
0.4165363E-04	-0.1027709E-03	0.7185565E-05	0.4942102E-04			

SA-5 RUN #3 MODE 3 XN = 3.591900

0.2587516E-01	0.2563274E-01	0.2514769E-01	0.2466302E-01	0.2418020E-01	0.2370126E-01	0.2322550E-01
0.2275268E-01	0.2228177E-01	0.2181662E-01	0.2136[illegible]1E-01	0.2091546E-01	0.2047943E-01	0.2004959E-01
0.1963090E-01	0.1922292E-01	0.1882997E-01	0.1845852E-01	0.1814765E-01	0.1789766E-01	0.1769713E-01
0.1753901E-01	0.1740539E-01	0.2795423E-01	0.1748114E-01	0.1728[illegible]0E-01	0.1718216E-01	0.1709213E-01
0.	0.	-0.1906622E-02	0.1692511E-01	0.	0.	0.
0.	-0.1069297E-01	-0.1142789E-01	-0.97[illegible]E-02	-0.9030759E-02	0.	-0.8395384E-02
-0.7511955E-02	-0.5714747E-02	-0.3658871E-02	-0.8974506E-03	0.2552447E-02	0.6009111E-02	0.9306422E-02
0.1229388E-01	0.1605367E-01	-0.2858114E-01	-0.45277[illegible]7E-01	0.	-0.4574401E-01	-0.5831354E-01
-0.6604640E-01	-0.6735283E-01	-0.6230914E-01	-0.5147313E-01	-0.3568152E-01	-0.1592880E-01	0.6294681E-02
0.3787680E-01	0.1425067E-00	0.	0.1457548E-00	0.2300938E-00	0.2922980E-00	0.3230950E-00
0.3216165E-00	0.2902866E-00	0.2326008E-00	0.1531917E-00	0.5981349E-01	0.1388135E-01	0.3312176E-02
0.	0.2943173E-02	-0.6338999E-02	-0.1451297E-01	-0.2077346E-01	-0.2480288E-01	-0.2672959E-01
-0.2662486E-01	-0.2473020E-01	-0.2162474E-01	0.5388001E-01	0.1285131E-00	0.	0.1307131E-00
0.1882806E-00	0.2290564E-00	0.2464928E-00	0.2402711E-00	0.2122390E-00	0.1651387E-00	0.1024421E-00
0.2978427E-01	0.8282114E-03	0.5273421E-02	-0.	0.5422699E-02	0.9192791E-02	0.1231742E-01
0.1436970E-01	0.1524013E-01	0.1491815E-01	0.1349187E-01	0.1113167E-01	0.8172410E-02	-0.2706961E-01
-0.2876435E-01	-0.	-0.2877214E-01	-0.2928050E-01	-0.2815522E-01	-0.2497544E-01	-0.1984193E-01
-0.1288472E-01	-0.4485710E-02	0.4931823E-02	0.1488793E-01	0.3628195E-04	-0.3208482E-02	-0.
-0.3317057E-02	-0.6096015E-02	-0.8444108E-02	-0.1028689E-01	-0.1090822E-01	-0.1095765E-01	-0.1029295E-01
-0.9043207E-02	-0.7423178E-02	0.2635681E-01	0.2637819E-01	-0.	0.2632955E-01	0.2544166E-01
0.2321560E-01	0.1941490E-01	0.1425361E-01	0.7821855E-02	0.4582512E-03	-0.7545101E-02	-0.1588512E-01
0.4647654E-01	0.4600412E-01	0.4505825E-01	0.4411495E-01	0.4317242E-01	0.4223838E-01	0.4130810E-01
0.4037781E-01	0.3945548E-01	0.3853815E-01	0.3763521E-01	0.3674935E-01	0.3587499E-01	0.3500942E-01
0.3416451E-01	0.3333032E-01	0.3252107E-01	0.3175017E-01	0.3106378E-01	0.3047093E-01	0.2995283E-01
0.2949891E-01	0.2908347E-01	0.4889297E-01	0.2932279E-01	0.2869058E-01	0.2831772E-01	0.2797182E-01
-0.1198450E-05	-0.	-0.2640507E-02	0.2712584E-01	-0.	-0.	-0.
-0.	-0.2240009E-01	-0.2337219E-01	-0.2085134E-01	-0.1982544E-01	-0.	-0.1887552E-01
-0.1757969E-01	-0.1498056E-01	-0.1199739E-01	-0.7908653E-02	-0.2626838E-02	0.2875517E-02	0.8300461E-02
0.1341116E-01	0.1979293E-01	-0.1783366E-01	-0.1714861E-01	0.4693011E-15	-0.1708743E-01	-0.1585383E-01
-0.1394586E-01	-0.1143149E-01	-0.8020669E-02	-0.3232732E-02	0.2142211E-02	0.5518122E-02	0.5778185E-02
0.1849084E-01	0.1880217E-01	0.5519053E-15	0.1875688E-01	0.1802942E-01	0.1556247E-01	0.1110737E-01
0.5539382E-02	0.2642811E-04	-0.5144402E-02	-0.1145269E-01	-0.1910069E-01	0.1619318E-01	0.1635043E-01
0.3376078E-15	0.1631426E-01	0.1566538E-01	0.1371610E-01	0.1035114E-01	0.6397542E-02	0.2852602E-02
-0.2720887E-03	-0.4659073E-02	-0.1057604E-01	-0.1992043E-01	-0.1918915E-01	0.4260029E-15	-0.1910826E-01
-0.1748198E-01	-0.1473146E-01	-0.1097724E-01	-0.6071551E-02	0.4149069E-03	0.7623937E-02	0.1281732E-01
0.1462895E-01	-0.2615731E-01	-0.2409710E-01	0.2570938E-16	-0.2396030E-01	-0.2103996E-01	-0.1739156E-01
-0.1323345E-01	-0.8406265E-02	-0.2321238E-02	0.4619290E-02	0.1052042E-01	0.1432102E-01	0.8372089E-03
0.8593590E-03	0.1030195E-14	0.8536496E-03	0.7582625E-03	0.1895309E-03	-0.9716108E-03	-0.2241358E-02
-0.2852487E-02	-0.2828225E-02	-0.3836542E-02	-0.6907138E-02	0.2362239E-01	0.2234261E-01	0.5686749E-15
0.2220739E-01	0.1957198E-01	0.1512349E-01	0.9021618E-02	0.2283985E-02	-0.3945144E-02	-0.9204678E-02
-0.1463253E-01	-0.2083156E-01	-0.1686689E-02	-0.8018058E-04	-0.1317086E-15	0.3011515E-04	0.2197520E-02
0.4278689E-02	0.5709358E-02	0.6642494E-02	0.7719387E-02	0.8877445E-02	0.8561914E-02	0.6003475E-02
0.1295888E-03	0.1297403E-03	0.1302350E-03	0.1302350E-03	-0.3569889E-04	0.7300248E-05	0.5090335E-02
0.5081565E-02	0.2976367E-02	0.2973066E-02	-0.4140339E-02	-0.4130874E-02	-0.4083637E-02	-0.4072058E-02
0.7443601E-03	0.8386943E-03	0.3803072E-02	0.5312028E-02	-0.7608983E-03	-0.9333881E-03	-0.3753031E-02
-0.5318461E-02	-0.6262844E-04	0.5034963E-04	-0.3025796E-04	-0.2353907E-06	0.6172339E-02	0.1705422E-01
0.2409217E-01	-0.5746932E-04	0.6074749E-04	-0.8092093E-04	0.1687883E-02	0.2148256E-01	-0.1647307E-01
-0.6133752E-04	-0.3818988E-04	-0.7291047E-04	-0.4223725E-02	-0.1867569E-01	-0.2106168E-01	-0.6056474E-04
-0.4731727E-04	-0.2254048E-04	-0.1955660E-01	-0.2385161E-01	0.1946120E-01	-0.6337207E-04	0.2114346E-04
0.2789156E-04	0.1721973E-01	0.2102496E-01	0.9199820E-03	0.3685220E-04	-0.1947104E-04	0.3976610E-04
0.2243197E-01	-0.1772032E-01	0.2508161E-02	-0.1245643E-04	-0.7388311E-04	0.5652900E-05	-0.1810493E-01
-0.2354732E-01	-0.1656362E-02	-0.7732280E-04	0.5641842E-04	-0.4638878E-07	-0.2144145E-01	0.1720553E-01
-0.2124657E-02	0.4906549E-04	0.3251081E-04	0.2528605E-04			

SA-5 RUN #3 MODE 4 XN = 3 485068

0.1647[illegible]E-01	0.1627105E-01	0.1587017E-01	[illegible]E-01	0.1547[illegible]E-01	0.1466813E-01	0.1427172E-01
0.1387861E-01	0.1348579E-01	0.1309639E-01	0.1271[illegible]E-01	0.1233411E-01	0.1196216E-01	0.1159506E-01
0.1123[illegible]9E-01	0.1087774E-01	0.1053[illegible]E-01	0.1[illegible]E-01	0.9[illegible]742E-02	0.9638278E-02	0.9405235E-02
0.9197[illegible]E-02	0.9[illegible]3645E-02	0.1212494E-01	0.9[illegible]E-02	0.8817[illegible]E-02	0.8641045E-02	0.8472449E-02
-0.	-0.	-0.1119830E-01	0.8[illegible]346E-02	-0.	-0.	-0.
-0.	-0.4229010E-02	-0.467328[illegible]E-01	-0.[illegible]E-02	-0.3106115E-02	-0.	-0.2683572E-02
-0.2100163E-02	-0.9356791E-03	0.3532561E-02	0.2[illegible]49E-02	0.3967085E-02	0.5789971E-02	0.7359460E-02
0.8595281E-02	0.9950794E-02	0.2151736E-01	0.3568546E-01	-0.	0.36[illegible]9158E-01	0.4688526E-01
0.5375739E-01	0.5534135E-01	0.5174038E-01	0.4334[illegible]E-01	0.3086749E-01	0.1510480E-01	-0.2731007E-02
0.7775[illegible]E-01	0.1377[illegible]E-01	-0.	0.1394[illegible]E-00	0.1854452E-00	0.2151431E-00	0.2228704E-00
0.2088755E-00	0.1748684E-[illegible]	0.1237148E-[illegible]	0.5[illegible]E-01	-0.1483[illegible]E-01	-0.1550621E-01	-0.1861795E-01
-0.	-0.1868143E-01	-0.2062495E-[illegible]	-0.2[illegible]E-01	-0.1970146E-01	-0.1661337E-01	-0.1196993E-01
-0.6[illegible]E-02	0.8563280E-[illegible]	0.835247[illegible]E-[illegible]	-0.7744[illegible]E-01	-0.1368[illegible]E-00	-0.	-0.1385768E-00
-0.184[illegible]E-00	-0.2134195E-[illegible]	-0.2210[illegible]E-[illegible]	-0.2[illegible]E-00	-0.1732596E-00	-0.1224671E-00	-0.5797796E-01
0.1513522E-01	-0.1602499E-01	-0.33[illegible]E-[illegible]	0.	-0.2849578E-02	0.8486[illegible]9E-02	0.1876191E-01
0.2692[illegible]E-01	0.3248755E-01	0.3547717E-01	0.3[illegible]E-01	0.3425957E-01	0.3113[illegible]E-01	0.3413[illegible]E-01
0.1714297E-01	0.	0.1649887E-[illegible]	0.9167157E-03	-0.1385282E-01	-0.2649171E-01	-0.3616813E-01
-0.429419[illegible]E-01	-0.4675021E-01	-0.4794741E-01	-0.4742[illegible]E-01	0.1667729E-01	0.4243943E-02	0.
0.3[illegible]E-02	-0.7289864E-02	-0.173595[illegible]E-[illegible]	-0.2542127E-01	-0.3094674E-01	-0.3404395E-01	-0.3477537E-01
-0.335[illegible]E-01	-0.3093247E-01	-0.3267[illegible]E-[illegible]	-0.1446749E-01	0.	-0.1378[illegible]E-01	0.2896661E-02
0.1343396E-01	0.3136038E-01	0.4089[illegible]E-[illegible]	0.4711[illegible]E-01	0.5009729E-01	0.4998[illegible]E-01	0.4800446E-01
-0.138995[illegible]E-[illegible]	-0.1372577E-[illegible]	-0.133783[illegible]E-[illegible]	-0.1[illegible]E-00	-0.1268[illegible]E-00	-0.1234341E-00	-0.1199711E-00
-0.1165[illegible]E-[illegible]	-0.1131476E-[illegible]	-0.1[illegible]9779[illegible]E-[illegible]	-0.1[illegible]E-00	-0.1031[illegible]E-00	-0.9988761E-01	-0.9668154E-01
-0.9349[illegible]E-01	-0.9036066E-01	-0.8732[illegible]E-[illegible]	-0.8[illegible]E-01	-0.8167451E-01	-0.7925738E-01	-0.7707106E-01
-0.7507[illegible]E-01	-0.7318346E-01	-0.1[illegible]4775[illegible]E-[illegible]	-0.7427[illegible]E-01	-0.7135269E-01	-0.6959832E-01	-0.6790227E-01
-0.253[illegible]E-03	0.	0.7548[illegible]E-02	-0.6[illegible]E-01	0.	0.	0.
0.	0.4408983E-01	0.4[illegible]269[illegible]E-01	0.3[illegible]E-01	0.3[illegible]371[illegible]E-01	0.	0.3170291E-01
0.272[illegible]E-01	0.1862191E-01	0.936[illegible]E-[illegible]	-0.2[illegible]E-02	-0.1613[illegible]E-01	-0.2898626E-01	-0.4035538E-01
-0.495[illegible]E-01	-0.5985998E-01	0.3442674E-01	0.1[illegible]E-01	0.2772854E-16	0.1631904E-01	0.3764457E-03
-0.148731[illegible]E-01	-0.2938528E-01	-0.3889[illegible]E-01	-0.4[illegible]E-01	-0.4923715E-01	-0.5196270E-01	-0.5578440E-01
-0.1219[illegible]E-01	-0.7401213E-[illegible]	0.1645229E-1[illegible]	-0.7215[illegible]E-02	-0.2745349E-02	0.1306698E-02	0.4360166E-02
0.6684[illegible]E-02	0.9249249E-[illegible]	0.119[illegible]E-[illegible]	0.12[illegible]E-01	0.1023482E-01	-0.3601957E-01	-0.1736033E-01
0.1391[illegible]9E-15	-0.1667855E-01	0.1666454E-[illegible]	0.1556[illegible]E-01	0.2807998E-01	0.3760944E-01	0.4534464E-01
0.[illegible]115[illegible]24E-01	0.5326656E-01	0.516192[illegible]E-01	0.1[illegible]354[illegible]E-01	0.6455589E-02	0.2976774E-15	0.6306189E-02
0.2693421E-02	-0.1054553E-02	-0.4896141E-[illegible]	-0.8123650E-02	-0.9836653E-02	-0.1079868E-01	-0.1112374E-01
-0.142295[illegible]E-[illegible]	0.3974319E-01	0.3817931E-[illegible]	-0.1[illegible]E-16	0.3794075E-01	0.3358655E-01	0.2597405E-01
0.1536[illegible]1E-01	0.3274795E-02	-0.888437[illegible]E-[illegible]	-0.2[illegible]E-01	-0.3127723E-01	-0.4296640E-01	0.2041457E-01
0.194[illegible]E-01	0.1146440E-15	0.1926205E-01	0.1[illegible]E-01	0.1234321E-01	0.5619828E-02	-0.1600880E-02
-0.8456297E-02	-0.1434611E-01	-0.2051597E-01	-0.2792142E-01	-0.4121151E-01	-0.3819803E-01	0.1775043E-15
-0.379[illegible]E-01	-0.3221821E-01	-0.2416858E-01	-0.1447[illegible]E-01	-0.3528539E-02	0.8741725E-02	0.2151938E-01
0.3247[illegible]E-01	0.3996102E-01	-0.2262127E-01	-0.2358786E-01	-0.2893509E-16	-0.2019881E-01	-0.1641141E-01
-0.1142367E-[illegible]	-0.5777156E-02	0.309775[illegible]E-[illegible]	0.7[illegible]E-02	0.1500738E-01	0.2122254E-01	0.2474181E-01
0.1418155E-03	0.1418732E-[illegible]	0.1427[illegible]E-[illegible]	0.1427[illegible]E-03	-0.6216878E-04	-0.1398874E-04	-0.2380225E-02
-0.2377435E-[illegible]	-0.8735569E-[illegible]	-0.8721[illegible]E-[illegible]	0.2[illegible]E-02	0.2264957E-02	0.8703992E-02	0.8694[illegible]E-02
0.2307965E-02	0.3326835E-02	-0.385581[illegible]E-[illegible]	-0.5787[illegible]E-02	-0.2283036E-02	-0.3379653E-02	0.3882677E-02
0.5754[illegible]E-02	-0.3061777E-04	-0.7819359E-04	-0.1[illegible]E-04	0.1980451E-06	-0.2227111E-02	0.9634113E-02
-0.636[illegible]E-01	-0.5259379E-04	-0.7831593[illegible]E-[illegible]	-0.4237[illegible]E-04	-0.7[illegible]476E-02	-0.6555669E-01	-0.1023803E-01
-0.5669[illegible]E-04	-0.3715249E-04	0.684439[illegible]E-[illegible]	0.3[illegible]E-02	-0.1095[illegible]E-01	0.6454352E-01	-0.5650953E-04
0.3783613E-04	-0.1183861E-04	0.81[illegible]E-02	0.8[illegible]E-01	0.1116983E-01	-0.5248[illegible]E-04	-0.8748079E-05
-0.1251[illegible]E-03	0.9056286E-02	-0.6448[illegible]E-01	0.2[illegible]E-03	-0.9538[illegible]E-04	0.4376955E-05	-0.1878846E-04
-0.6315743E-[illegible]	-0.112014[illegible]E-[illegible]	-0.384457[illegible]E-[illegible]	-0.93[illegible]E-05	0.6126981E-04	0.1833629E-04	-0.9980316E-02
0.8388[illegible]E-[illegible]	-0.4911765E-[illegible]	0.949[illegible]E-04	-0.6[illegible]E-05	0.5995[illegible]E-04	0.6319777E-01	0.1[illegible]6785E-01
0.3551439E-02	0.6653851E-[illegible]	-0.799736[illegible]E-[illegible]	0.2[illegible]E-04			

SA-5 RUN #3 MODE 5 XN = 3.469382

0.5162265E-01	0.5097134E-01	0.4966775E-01	0.4836266E-01	0.4706135E-01	0.4576768E-01	0.4448006E-01
0.4319985E-01	0.4192156E-01	0.4065534E-01	0.3940411E-01	0.3817343E-01	0.3696203E-01	0.3575987E-01
0.3457900E-01	0.3341654E-01	0.3228311E-01	0.3118587E-01	0.3020165E-01	0.2932693E-01	0.2854161E-01
0.2783302E-01	0.2716807E-01	0.4156716E-01	0.2755041E-01	0.2653089E-01	0.2591771E-01	0.2533025E-01
-0.	-0.	-0.2983792E-02	0.2393337E-01	-0.	-0.	-0.
-0.	-0.1918147E-01	-0.2081961E-01	-0.1774156E-01	-0.1672962E-01	-0.	-0.1575087E-01
-0.1435966E-01	-0.1143997E-01	-0.7997996E-02	-0.3276440E-02	0.2695194E-02	0.8668921E-02	0.1425649E-01
0.1911773E-01	0.2467207E-01	-0.1792725E-01	-0.4484964E-01	-0.	-0.4566192E-01	-0.6704678E-01
-0.8228562E-01	-0.8900634E-01	-0.8698895E-01	-0.7703144E-01	-0.6010373E-01	-0.3750109E-01	-0.1129281E-01
0.7722487E-01	0.1403929E-00	-0.	0.1422200E-00	0.1908204E-00	0.2226487E-00	0.2317351E-00
0.2182888E-00	0.1840384E-00	0.1319011E-00	0.6533415E-01	-0.1033164E-01	0.4836350E-03	-0.5770236E-02
-0.	-0.5963475E-02	-0.1111394E-01	-0.1508469E-01	-0.1734859E-01	-0.1778844E-01	-0.1655979E-01
-0.1384337E-01	-0.9907371E-02	-0.5205776E-02	-0.7528030E-01	-0.1349694E-00	-0.	-0.1366929E-00
-0.1825035E-00	-0.2123076E-00	-0.2205036E-00	-0.2071914E-00	-0.1741407E-00	-0.1240914E-00	-0.6033467E-01
0.1206471E-01	-0.1969206E-01	0.7172464E-02	0.	0.8100544E-02	0.3135011E-01	0.5127334E-01
0.6536857E-01	0.7278361E-01	0.7359289E-01	0.6829788E-01	0.5795336E-01	0.4443839E-01	0.2303285E-01
0.1213263E-01	0.	0.1170914E-01	0.1648695E-02	-0.8003208E-02	-0.1642899E-01	-0.2307117E-01
-0.2804769E-01	-0.3127210E-01	-0.3291454E-01	-0.3347440E-01	0.2028592E-01	-0.5999792E-02	0.
-0.6899338E-02	-0.2968249E-01	-0.4927153E-01	-0.6332146E-01	-0.7087233E-01	-0.7210356E-01	-0.6738729E-01
-0.5767227E-01	-0.4474223E-01	-0.2291672E-01	-0.1238764E-01	0.	-0.1198255E-01	-0.2212191E-02
0.7206645E-02	0.1549089E-01	0.2218124E-01	0.2727687E-01	0.3073120E-01	0.3271107E-01	0.3370729E-01
-0.1140516E-00	-0.1126371E-00	-0.1098173E-00	-0.1069965E-00	-0.1041998E-00	-0.1013860E-00	-0.9859728E-01
-0.9583900E-01	-0.9306222E-01	-0.9033569E-01	-0.8761147E-01	-0.8495022E-01	-0.8230849E-01	-0.7971403E-01
-0.7712065E-01	-0.7460988E-01	-0.7213528E-01	-0.6972272E-01	-0.6755396E-01	-0.6560493E-01	-0.6384392E-01
-0.6224161E-01	-0.6072443E-01	-0.8648868E-01	-0.6159466E-01	-0.5925806E-01	-0.5785767E-01	-0.5649518E-01
-0.8099250E-04	0.	0.6320385E-02	-0.5504122E-01	0.	0.	0.
0.	0.3578570E-01	0.3836398E-01	0.3127557E-01	0.2832187E-01	0.	0.2560724E-01
0.2196930E-01	0.1496750E-01	0.7424943E-02	-0.2181068E-02	-0.1352509E-01	-0.2420086E-01	-0.3370236E-01
-0.4146089E-01	-0.5011058E-01	0.4333381E-01	0.2690272E-01	0.6414884E-15	0.2610851E-01	0.8535748E-02
-0.8791016E-02	-0.2168388E-01	-0.2825824E-01	-0.3088362E-01	-0.3471613E-01	-0.4476884E-01	-0.5735274E-01
0.1155263E-01	0.8347315E-02	0.3616222E-15	0.8036364E-02	0.2431284E-02	-0.3582396E-02	-0.6350832E-02
-0.4239162E-02	0.8054150E-03	0.3416258E-02	-0.1727871E-02	-0.1094480E-01	-0.2517282E-01	-0.9863106E-02
0.5389302E-15	-0.9464660E-02	0.2128702E-02	0.1259418E-01	0.2395787E-01	0.3680568E-01	0.4910436E-01
0.5558159E-01	0.5171659E-01	0.4264783E-01	0.2734298E-02	-0.2779706E-02	0.3794617E-15	-0.3140535E-02
-0.1113415E-01	-0.1634355E-01	-0.1793048E-01	-0.1338499E-01	-0.5069626E-02	0.1214814E-02	-0.3771361E-03
-0.6728753E-02	0.3558940E-01	0.3218756E-01	-0.1240593E-15	0.3168957E-01	0.2326844E-01	0.1260993E-01
0.3862486E-02	-0.7308812E-03	-0.3083258E-02	-0.7812514E-02	-0.1926418E-01	-0.3476679E-01	0.4086668E-01
0.3707868E-01	0.4363066E-16	0.3655360E-01	0.2734690E-01	0.1546084E-01	0.5306691E-02	-0.6314793E-03
-0.3995993E-02	-0.9403206E-02	-0.2141152E-01	-0.3763149E-01	-0.1808877E-01	-0.1787123E-01	0.2891300E-16
-0.1796431E-01	-0.1881747E-01	-0.1803066E-01	-0.1224637E-01	-0.8383098E-03	0.1355759E-01	0.2505956E-01
0.2837883E-01	0.2572806E-01	-0.2385362E-01	-0.2414551E-01	0.6251641E-17	-0.2427624E-01	-0.2592948E-01
-0.2586185E-01	-0.2025325E-01	-0.8108472E-02	0.8010461E-02	0.2205222E-01	0.2823128E-01	0.2820285E-01
0.1765026E-03	0.1050626E-03	0.1002438E-03	0.1002438E-03	-0.1914267E-03	-0.1763595E-03	0.1006400E-02
0.1005562E-02	-0.8305319E-02	-0.8367891E-02	-0.1500065E-02	-0.1495048E-02	0.8858576E-02	0.8829333E-02
0.3883044E-02	0.5866707E-02	-0.2913178E-02	-0.4298992E-02	-0.3267567E-02	-0.4879531E-02	0.2288311E-02
0.3277518E-02	-0.7383084E-04	-0.6563046E-04	-0.4197417E-04	0.1866467E-06	0.3890524E-02	0.3827653E-01
-0.7140865E-01	-0.1997248E-03	-0.3002495E-03	-0.4085371E-03	-0.3574335E-02	-0.4298155E-01	-0.4377514E-01
-0.2035908E-03	-0.2695075E-03	-0.2856746E-03	0.2865603E-02	-0.1575997E-01	0.3602096E-01	-0.2042265E-03
-0.1979031E-03	-0.3058036E-03	0.1268622E-01	0.6600421E-01	0.1024599E-01	-0.1996483E-03	-0.1905757E-03
-0.4463262E-03	0.2678764E-01	-0.5796626E-01	0.1877553E-02	-0.5999062E-04	-0.7438869E-04	0.2785416E-03
-0.5215364E-01	-0.3133057E-01	-0.3052429E-02	-0.4358158E-04	0.3271015E-04	0.2818808E-03	-0.2376284E-01
0.4910551E-01	-0.1875264E-02	0.1043367E-03	-0.1322758E-04	0.3467399E-03	0.5433825E-01	0.2251435E-01
0.3116831E-02	0.5531390E-04	-0.1103269E-03	0.3119213E-03			

SA-5 RUN #3 MODE 6 XN = 3.457256

0.3621293E-01	0.3582355E-01	0.3554410E-01	0.3426437E-01	0.3348779E-01	0.3271292E-01	0.3194248E-01
0.3117576E-01	0.3041087E-01	0.2965124E-01	0.2891172E-01	0.2816216E-01	0.2743149E-01	0.2670918E-01
0.2599656E-01	0.2529502E-01	0.2460891E-01	0.2394475E-01	0.2334279E-01	0.2280018E-01	0.2230896E-01
0.2186087E-01	0.2143740E-01	0.2657036E-01	0.2169[illegible]E-01	0.2132832E-01	0.2063469E-01	0.2025573E-01
0.	0.	-0.2710577E-02	0.1931812E-01	0.	0.	0.
0.	-0.7707567E-02	-0.8943225E-02	-0.5691[illegible]E-02	-0.4709822E-02	0.	-0.3579516E-02
-0.2[illegible]9388E-02	0.1123689E-[illegible]2	0.4544029E-02	0.8022729E-02	0.1362385E-01	0.1776330E-01	0.2194110E-01
0.2317637E-01	0.2507217E-01	-0.2152314E-01	-0.7152971E-01	0.	-0.7306646E-01	-0.1130984E-00
-0.1421267E-00	-0.1556814E-00	-0.1533780E-[illegible]	-0.1384671E-00	-0.1067062E-00	-0.6640574E-01	-0.1936110E-01
0.6970626E-01	0.1342856E-00	0.	0.1361740E-00	0.1861410E-00	0.2193486E-00	0.2297170E-00
0.2173444E-00	0.1839867E-00	0.1325386E-[illegible]	0.6646948E-01	-0.8832738E-02	0.1486675E-02	0.1355519E-01
0.	0.1392707E-01	0.2358238E-[illegible]	0.3[illegible]3938E-01	0.3373155E-01	0.3303431E-01	0.2875069E-01
0.2132365E-01	0.1132687E-01	-0.3178980E-02	-0.5861757E-01	-0.1313294E-00	0.	-0.1331571E-00
-0.1816[illegible]9E-00	-0.2136730E-00	-0.2234572E-[illegible]	-0.2111[illegible]E-01	-0.1781948E-00	-0.1277171E-00	-0.6352912E-01
0.[illegible]627[illegible]7E-01	-0.1350253E-01	0.2396552E-[illegible]	-0.	0.2962234E-02	0.1703068E-01	0.2963337E-01
0.3945418E-01	0.4590618E-01	0.4906610E-[illegible]	0.4916575E-01	0.4637269E-01	0.4193288E-01	0.2475011E-01
0.1693721E-01	-0.	0.1661759E-01	0.9113[illegible]E-02	0.1470470E-02	-0.5802186E-02	-0.1225232E-01
-0.1791282E-01	-0.2261787E-01	-0.2638994E-[illegible]	-0.2948937E-01	0.1146249E-01	-0.8953392E-02	-0.
-0.9655314E-02	-0.2740390E-01	-0.4278232E-01	-0.5402221E-01	-0.6037795E-01	-0.6200791E-01	-0.5917177E-01
-0.5256969E-01	-0.4354452E-01	-0.2480116E-[illegible]	-0.1731333E-01	-0.	-0.1701034E-01	-0.9787007E-02
-0.2403361E-02	0.4669382E-02	0.1101581E-01	0.1663973E-01	0.2138890E-01	0.2528440E-01	0.2857594E-01
-0.1031852E-00	-0.1019428E-[illegible]	-0.9946271E-[illegible]	-0.9698524E-01	-0.9452231E-01	-0.9205[illegible]71E-01	-0.8959923E-01
-0.8717127E-01	-0.8473060E-01	-0.8233007E-01	-0.7993745E-01	-0.7759664E-01	-0.7527343E-01	-0.7299031E-01
-0.7[illegible]2359E-01	-0.6850249E-01	-0.6632701E-01	-0.6421317E-01	-0.6230792E-01	-0.6059685E-01	-0.5905747E-01
-0.5765591E-01	-0.5633081E-01	-0.7976425E-01	-0.5779139E-01	-0.5505162E-01	-0.5382747E-01	-0.5264257E-01
-0.2278076E-04	-0.	0.5921688E-02	-0.4960[illegible]E-01	-0.	-0.	-0.
-0.	0.3179258E-01	0.34[illegible]974E-01	0.2756875E-01	0.2474624E-01	-0.	0.2215559E-01
0.1869[illegible]76E-01	0.1205174E-01	0.4953230E-02	-0.4[illegible]134[illegible]E-02	-0.1444803E-01	-0.2414778E-01	-0.3267321E-01
-0.3951469E-01	-0.4707363E-01	0.2509810E-02	0.2681725E-02	0.1838478E-15	0.1835809E-02	-0.1811119E-01
-0.[illegible]E-01	-0.4647623E-01	-0.5176382E-01	-0.5268691E-01	-0.5184447E-01	-0.5197523E-01	-0.5312917E-01
-0.3780781E-02	-0.4626881E-02	0.1063719E-15	-0.4729727E-02	-0.6732155E-02	-0.8423382E-02	-0.8626141E-02
-0.7[illegible]1[illegible]9E-02	-0.4663852E-02	-0.3465410E-01	-0.5233[illegible]E-02	-0.8519839E-02	-0.2490494E-01	-0.1165432E-01
0.1658181E-15	-0.1120103E-01	0.4123167E-00	0.1169748E-01	0.2274212E-01	0.3312773E-01	0.4205[illegible]E-01
0.4738[illegible]98E-01	0.4792181E-01	0.4599864E-01	0.1159320E-01	0.1940774E-01	0.1257813E-15	0.1956431E-01
0.2464027E-01	0.2745434E-01	0.2846805E-01	0.2822377E-01	0.2639572E-01	0.2185730E-01	0.1400734E-01
0.5705931E-02	0.2931964E-01	0.2639423E-01	-0.3816547E-16	0.2604925E-01	0.1985696E-01	0.1168820E-01
0.3557848E-02	-0.3116008E-02	-0.8746137E-[illegible]	-0.1459322E-01	-0.2190778E-01	-0.2974611E-01	0.2279396E-01
0.2[illegible]32265E-01	-0.2458311E-17	0.2[illegible]3[illegible]1E-01	0.1466897E-01	0.7433176E-02	0.7965057E-04	-0.6171101E-02
-0.1183051E-01	-0.1824792E-01	-0.2673770E-01	-0.3631320E-01	-0.2493642E-01	-0.2441347E-01	0.1025048E-16
-0.2438619E-01	-0.2351427E-01	-0.2096588E-01	-0.1540[illegible]E-01	-0.6881466E-02	0.3488200E-02	0.1322630E-01
0.2012810E-01	0.2463744E-01	-0.1785230E-01	-0.1563772E-01	0.2970133E-17	-0.1547789E-01	-0.1205557E-01
-0.6809763E-02	0.6275[illegible]E-03	0.9986631E-01	0.1997[illegible]E-01	0.2822162E-01	0.3286869E-01	0.3492619E-01
0.5256801E-04	0.5185608E-04	0.4948965E-04	0.4948983E-04	-0.7248114E-04	-0.6062233E-04	-0.2671080E-03
-0.2675120E-03	-0.7312477E-02	-0.7306[illegible]E-02	0.1336948E-02	0.1332412E-02	0.6247346E-02	0.6235802E-02
0.1609193E-02	0.2100460E-02	-0.2477648E-02	-0.3546939E-02	-0.2374556E-02	-0.3367794E-02	0.3239311E-02
0.4789778E-02	-0.1711972E-04	-0.573655[illegible]E-04	-0.1[illegible]E-04	0.2063758E-06	0.1347692E-02	0.3112799E-01
-0.5724690E-01	-0.7014809E-04	-0.1356847E-03	-0.1614125E-03	-0.5112438E-02	-0.4633270E-01	-0.3405158E-01
-0.7478677E-04	-0.1262098E-03	-0.4343895E-04	0.3443187E-02	-0.2082341E-01	0.4298126E-01	-0.7378097E-04
-0.5266859E-04	-0.1156440E-03	0.5744998E-02	0.5564925E-01	0.1766528E-01	-0.7219499E-04	-0.1132132E-03
-0.1866676E-03	0.2459172E-01	-0.5214267E-01	0.5[illegible]E-03	-0.8364205E-04	-0.4396205E-05	0.4917573E-04
-0.4901844E-01	-0.2778042E-01	-0.2651362E-02	0.5633074E-05	0.3572261E-04	0.8342533E-04	-0.2451095E-01
0.4267619E-01	-0.7051693E-03	0.6332452E-04	-0.3[illegible]E-05	0.1157721E-03	0.5985663E-01	0.2430138E-01
0.2923595E-02	0.3854364E-04	-0.8941639E-04	0.1120[illegible]4E-03			

SA-5 RUN #3 MODE 7 XN = 3 440089

0.4724501E-01	0.4675189E-01	0.4576501E-01	0.4477540E-01	0.4378774E-01	0.4281320E-01	0.4184396E-01
0.4088444E-01	0.3992529E-01	0.3898362E-01	0.3805606E-01	0.3715569E-01	0.3628352E-01	0.3541397E-01
0.3457599E-01	0.3375739E-01	0.3297512E-01	0.3223211E-01	0.3162779E-01	0.3115526E-01	0.3078799E-01
0.3051114E-01	0.3028607E-01	0.4837094E-01	0.3041333E-01	0.3009696E-01	0.2993192E-01	0.2979631E-01
-0.	-0.	-0.3354486E-02	0.2957771E-01	-0.	-0.	-0.
-0.	-0.1777963E-01	-0.1910468E-01	-0.1601029E-01	-0.1483281E-01	-0.	-0.1372995E-01
-0.1221600E-01	-0.9182301E-02	-0.5744413E-02	-0.1123244E-02	0.4715021E-02	0.1068729E-01	0.1652905E-01
0.2200560E-01	0.2912984E-01	-0.8077675E-01	-0.1638765E-00	-0.	-0.1663324E-00	-0.2312902E-00
-0.2756967E-00	-0.2919817E-00	-0.2798239E-0	-0.2415862E-00	-0.1805737E-00	-0.1010486E-00	-0.9807675E-02
-0.3346194E-01	-0.2265310E-01	-0.	-0.2225450E-01	-0.1221165E-01	-0.2466200E-02	0.6151219E-02
0.1336301E-01	0.1905867E-01	0.2329089E-01	0.2622097E-01	0.2828275E-01	0.6108100E-02	-0.5184110E-01
-0.	-0.5369242E-01	-0.1016279E-0	-0.1391333E-00	-0.1614141E-00	-0.1674940E-00	-0.1586330E-00
-0.1361751E-00	-0.1022741E-00	-0.6092523E-01	0.3101255E-01	0.1287393E-01	-0.	0.1226911E-01
-0.2771541E-02	-0.1604910E-01	-0.2635035E-01	-0.3303454E-01	-0.3646060E-01	-0.3666682E-01	-0.3400297E-01
-0.2932767E-01	0.3302676E-02	0.7958477E-02	0.	0.8117502E-02	0.1205207E-01	0.1531931E-01
0.1743641E-01	0.1840114E-01	0.1796985E-01	0.1617891E-01	0.1308836E-01	0.9091809E-02	-0.5421943E-01
-0.5380240E-01	0.	-0.5370281E-01	-0.5160845E-01	-0.4693844E-01	-0.3910924E-01	-0.2821179E-01
-0.1444712E-01	0.1565327E-02	0.1900326E-01	0.3702642E-01	-0.4301380E-02	-0.9090544E-02	0.
-0.9233107E-02	-0.1311510E-01	-0.1605997E-01	-0.1772797E-01	-0.1788803E-01	-0.1684944E-01	-0.1480376E-01
-0.1208721E-01	-0.9026107E-02	0.5080834E-01	0.4585662E-01	0.	0.4559406E-01	0.3954430E-01
0.3150196E-01	0.2148511E-01	0.1026860E-01	-0.2063697E-02	-0.1488252E-01	-0.2793525E-01	-0.4109630E-01
0.1019971E-00	0.1010664E-0	0.9918431E-01	0.9751771E-01	0.9544024E-01	0.9359355E-01	0.9174870E-01
0.8989820E-01	0.8806770E-01	0.8623938E-01	0.8443488E-01	0.8270923E-01	0.8097359E-01	0.7926049E-01
0.7759931E-01	0.7594021E-01	0.7434321E-01	0.7285595E-01	0.7151364E-01	0.7037152E-01	0.6939618E-01
0.6855021E-01	0.6778758E-01	0.1108130E-0	0.6823181E-01	0.6706674E-01	0.6638980E-01	0.6578465E-01
-0.3391157E-05	0.	-0.6408557E-02	0.6424955E-01	0.	0.	0.
0.	-0.4721169E-01	-0.4981725E-01	-0.4337121E-01	-0.4090575E-01	0.	-0.3862312E-01
-0.3551371E-01	-0.2931189E-01	-0.2227366E-01	-0.1276269E-01	-0.6745411E-03	0.1171743E-01	0.2377679E-01
0.3496060E-01	0.4899020E-01	-0.4128263E-01	-0.3360925E-01	0.7518790E-15	-0.3328452E-01	-0.2574225E-01
-0.1925481E-01	-0.1521769E-01	-0.1030611E-01	0.1318347E-02	0.1773923E-01	0.2345790E-01	0.1098346E-01
0.3103151E-01	0.3456922E-01	0.1406518E-14	0.3460235E-01	0.3602770E-01	0.3260714E-01	0.2224945E-01
0.8934651E-02	-0.3003000E-03	-0.5038722E-02	-0.1871487E-01	-0.4763840E-01	0.3109605E-01	0.3107711E-01
0.1179108E-14	0.3098639E-01	0.2914101E-01	0.2323915E-01	0.1220656E-01	0.4644445E-03	-0.5436145E-02
-0.6051256E-02	-0.1545631E-01	-0.3997220E-01	-0.4166324E-01	-0.3848798E-01	0.2035322E-14	-0.3825912E-01
-0.3338938E-01	-0.2766985E-01	-0.2269344E-01	-0.1576088E-01	-0.1189171E-02	0.1917645E-01	0.2935433E-01
0.2052001E-01	-0.5648595E-01	-0.4801091E-01	-0.1228404E-15	-0.4755185E-01	-0.3716599E-01	-0.2725452E-01
-0.1953271E-01	-0.1165035E-01	0.1688411E-02	0.2011282E-01	0.3187483E-01	0.2961459E-01	-0.7780205E-02
-0.5057341E-02	0.1219119E-14	-0.4962269E-02	-0.2603981E-02	-0.2777037E-02	-0.6594193E-02	-0.1110705E-01
-0.1058655E-01	-0.4453900E-02	-0.4052686E-02	-0.1729710E-01	0.4453094E-01	0.4447371E-01	0.1309423E-14
0.4430566E-01	0.4143588E-01	0.3298502E-01	0.1832979E-01	0.1621789E-02	-0.1085079E-01	-0.1790083E-01
-0.2991918E-01	-0.5351609E-01	-0.3740969E-02	0.1689590E-02	-0.2218851E-15	0.1980015E-02	0.7980042E-02
0.1164022E-01	0.1091951E-01	0.8232650E-02	0.9171091E-02	0.1444878E-01	0.1319497E-01	-0.1766014E-02
-0.4485041E-03	-0.4456337E-03	-0.4361067E-03	-0.4361067E-03	0.6060534E-03	0.2016436E-03	0.9726630E-02
0.9707193E-02	0.7777726E-02	0.7783885E-02	-0.8965781E-02	-0.8936612E-02	-0.8875162E-02	-0.8826907E-02
0.9987754E-03	0.1149488E-02	0.8402711E-02	0.1164694E-01	-0.1294377E-02	-0.1477152E-02	-0.8323697E-02
-0.1139817E-01	0.8033969E-04	0.1117154E-03	-0.5808924E-04	-0.1756222E-06	0.1456220E-01	0.2847336E-01
0.5820283E-01	-0.3685481E-03	-0.2966582E-04	-0.2610336E-03	0.7408312E-02	0.5105107E-01	-0.3017988E-01
-0.3729716E-03	-0.2347977E-03	-0.2958426E-03	-0.6555708E-02	-0.3669329E-01	-0.5196124E-01	-0.3757786E-03
-0.2651329E-03	-0.1507178E-03	-0.1637366E-03	-0.5992375E-01	0.3572924E-01	-0.3776927E-03	-0.9270663E-04
-0.6710612E-04	0.3224070E-01	0.5017467E-01	0.1538417E-02	0.9946819E-04	-0.6308812E-04	0.1938185E-03
0.5461381E-01	-0.3521258E-01	0.4629239E-02	-0.4424999E-04	-0.1377284E-03	0.1286514E-03	-0.3257165E-01
-0.5891315E-01	-0.3289977E-02	-0.1493680E-03	0.8986837E-04	0.8978270E-04	-0.5331161E-01	0.2842275E-01
-0.5627606E-02	0.6950651E-04	0.1025965E-03	0.1734639E-03			

SA-5 RUN #3 MODE 8 XN = 3 326033

0.9569249E-01	0.9445362E-01	0.9197763E-01	0.8932773E-01	0.8704536E-01	0.8459187E-01	0.8214907E-01
0.7971146E-01	0.7728398E-01	0.7486915E-01	0.7249[illegible]E-01	0.7013736E-01	0.6780343E-01	0.6549984E-01
0.6322241E-01	0.6098086E-01	0.5878[illegible]E-01	0.5662[illegible]E-01	0.5469521E-01	0.5291942E-01	0.5129192E-01
0.4979[illegible]E-01	0.4836170E-01	0.7011187E-01	0.4918434E-01	0.4697348E-01	0.4563290E-01	0.4433449E-01
0.	0.	-0.5321195E-02	0.4113[illegible]E-01	0.	0.	0.
0.	-0.3263256E-01	-0.3443906E-01	-0.2951936E-01	-0.2738124E-01	0.	-0.2531282E-01
-0.2238507E-01	-0.1632635E-01	-0.9353943E-02	-0.8576783E-04	0.1115890E-01	0.2182947E-01	0.3123401E-01
0.3868234E-01	0.4632232E-01	-0.6762664E-01	-0.1444824E-00	0.	-0.1467784E-00	-0.2070037E-00
-0.2484044E-00	-0.2638906E-[illegible]	-0.253323[illegible]E-[illegible]	-0.2187601E-00	-0.1634143E-00	-0.9116199E-01	-0.1816447E-02
0.2596851E-01	0.2550886E-01	0.	0.2544[illegible]8E-01	0.2401794E-01	0.2112950E-01	0.1669172E-01
0.1[illegible]91984E-01	0.4043922E-02	-0.3642884E-02	-0.1187873E-01	-0.2040783E-01	0.6328237E-01	0.1318572E-00
0.	0.1338848E-00	0.187477[illegible]E-[illegible]	0.2246639E-00	0.2373729E-00	0.2272024E-00	0.1954862E-00
0.1450212E-00	0.7931383E-[illegible]1	0.3945143E-[illegible]	-0.2598616E-01	-0.2559446E-01	0.	-0.2552314E-01
-0.2417069E-01	-0.2134703E-01	-0.1689134E-01	-0.1113991E-01	-0.4213331E-02	0.3504212E-02	0.1170615E-01
0.2[illegible]70[illegible]E-01	-0.2692825E-01	-0.6[illegible]9192E-02	-0.	-0.5366612E-02	0.1311591E-01	0.2971513E-01
0.4266747E-01	0.5115715E-01	0.5531939E-01	0.5535493E-01	0.5192750E-01	0.4628421E-01	0.1146272E-01
0.3480087E-01	-0.	0.3556679E-01	0.5464407E-01	0.6982042E-01	0.7803577E-01	0.7878512E-01
0.7227401E-01	0.5923376E-01	0.4095614E-01	0.1951148E-01	0.2672945E-01	0.5500139E-02	-0.
0.4737232E-02	-0.1413455E-01	-0.3112444E-01	-0.4436240E-01	-0.5311116E-01	-0.5730794E-01	-0.5711042E-01
-0.5317757E-01	-0.4661344E-01	-0.1082476E-01	-0.3299693E-01	-0.	-0.3370944E-01	-0.5192265E-01
-0.6595525E-01	-0.7349254E-[illegible]	-0.7487805E-01	-0.6788775E-01	-0.5566721E-01	-0.3853583E-01	-0.1832876E-01
-0.2427268E-01	-0.2407961E-[illegible]1	-0.2369170E-01	-0.2335[illegible]4E-01	-0.2291704E-01	-0.2254109E-01	-0.2216330E-01
-0.2177839E-01	-0.2140774E-01	-0.2102987E-01	-0.2065032E-01	-0.2030757E-01	-0.1995747E-01	-0.1960452E-01
-0.1927485E-01	-0.1893739E-01	-0.1861875E-01	-0.1832495E-01	-0.1806818E-01	-0.1786126E-01	-0.1769063E-01
-0.1755261E-01	-0.1743679E-[illegible]1	-0.3026690E-01	-0.1753318E-01	-0.1733422E-01	-0.1723687E-01	-0.1715903E-01
-0.1167604E-00	-0.	0.1575672E-02	-0.1695691E-01	-0.	-0.	-0.
-0.	0.1324053E-01	0.1371044E-01	0.1247422E-01	0.1193703E-01	-0.	0.1143833E-01
0.1075260E-01	0.9353595E-02	0.7710985E-[illegible]	0.5405362E-02	0.2346673E-02	-0.9317180E-03	-0.4251930E-02
-0.7482257E-02	-0.1164806E-[illegible]1	0.240823[illegible]E-01	0.1641862E-01	-0.4045482E-16	0.1612606E-01	0.8984644E-02
0.2556543E-02	-0.2293027E-02	-0.6637174E-[illegible]	-0.1269138E-01	-0.1983632E-01	-0.2256391E-01	-0.1838611E-01
0.1893579E-01	0.2459850E-03	-0.3996990E-16	-0.3977721E-03	-0.1657288E-01	-0.2972390E-01	-0.3783523E-01
-0.4183028E-01	-0.4455046E-01	-0.4635254E-01	-0.4287186E-01	-0.3283448E-01	-0.2053639E-01	-0.1568141E-01
-0.3367155E-15	-0.1546988E-01	-0.1041327E-01	-0.4186327E-02	0.3270315E-02	0.1020119E-01	0.1425900E-01
0.1565269E-01	0.1966089E-01	0.2892778E-01	-0.1521408E-01	0.1050086E-02	-0.7540690E-15	0.1598606E-02
0.1548910E-01	0.2781650E-01	0.3793004E-01	0.4432603E-01	0.4516612E-01	0.4126792E-01	0.3899524E-01
0.4268681E-01	0.1123324E-02	-0.7531211E-[illegible]	0.3616497E-16	-0.7945203E-03	-0.2113027E-02	-0.1937260E-02
0.1656317E-03	0.2883313E-02	0.4031095E-02	0.3339529E-02	0.4784123E-02	0.1091128E-01	0.3832308E-01
0.3518[illegible]16E-01	-0.3057597E-15	0.3490817E-01	0.2948355E-01	0.2246424E-01	0.1467311E-01	0.5891915E-02
-0.5431801E-02	-0.1875003E-01	-0.2929952E-01	-0.3364882E-01	0.3245038E-02	0.2090334E-02	-0.4374967E-15
0.2[illegible]16642E-02	0.4603010E-03	-0.4959372E-03	-0.3529988E-03	-0.1075930E-03	-0.1748830E-02	-0.5277446E-02
-0.6540499E-02	-0.2919190E-02	-0.3437058E-01	-0.3411713E-01	0.7782063E-16	-0.3397250E-01	-0.3135810E-01
-0.2528963E-01	-0.1551023E-01	-0.3813045E-02	0.7163611E-02	0.1632167E-01	0.2698204E-01	0.4145683E-01
0.3311057E-04	0.3228561E-04	0.2954233E-04	0.2954233E-04	-0.1430875E-03	-0.6175495E-04	0.4676451E-02
0.4672[illegible]73E-02	-0.5283809E-02	-0.5282759E-02	-0.4686428E-02	-0.4683863E-02	0.5500196E-02	0.5478665E-02
0.3191208E-02	0.5001119E-02	-0.1133647E-02	-0.1335591E-02	-0.3105640E-02	-0.4846588E-02	0.1786031E-02
0.1276228E-02	0.5820437E-[illegible]	-0.3328085E-[illegible]	-0.5446817E-04	0.2968394E-06	0.2043584E-02	0.5163081E-01
-0.1443742E-01	0.1363751E-03	0.2383741E-04	-0.5751401E-05	-0.5548030E-02	-0.1241859E-01	-0.4987640E-01
0.1362[illegible]50E-03	0.3204726E-04	0.9497[illegible]E-04	-0.4066718E-02	-0.4867997E-01	0.1248254E-01	0.1345406E-03
0.9247857E-04	0.1418821E-[illegible]	0.325133[illegible]E-02	0.1543[illegible]E-01	0.4821399E-01	0.1350018E-03	0.9171634E-04
0.377[illegible]491E-04	0.4818393E-[illegible]	-0.1177[illegible]E-[illegible]	0.3[illegible]7[illegible]E-02	-0.3858145E-04	-0.4820405E-04	-0.6783860E-04
-0.1459039E-01	-0.4809849E-01	-0.1344395E-02	-0.7887358E-04	0.5249750E-04	-0.8941114E-04	-0.4833899E-01
0.1465111E-01	-0.2509750E-[illegible]2	0.4683167E-04	0.491[illegible]7[illegible]E-04	-0.3364586E-04	0.1439688E-01	0.5079162E-01
0.1879517E-02	0.7872401E-04	-0.5078685E-[illegible]	-0.2281[illegible]4E-04			

SA-5 RUN #3 MODE 9 XN = 3.171768

0.1963500E-00	0.1936502E-00	0.1883528E-00	0.1830646E-00	0.1777930E-00	0.1725437E-00	0.1673197E-00
0.1621122E-00	0.1569235E-00	0.1517697E-00	0.1466826E-00	0.1416793E-00	0.1367209E-00	0.1318210E-00
0.1269889E-00	0.1222366E-00	0.1175835E-00	0.1130913E-00	0.1090044E-00	0.1053384E-00	0.1020148E-00
0.9898251E-01	0.9611925E-01	0.1530043E-00	0.9776700E-01	0.9335286E-01	0.9068858E-01	0.8812442E-01
0.	0.	-0.9673226E-02	0.8189784E-01	0.	0.	0.
0.	-0.7878052E-01	-0.8153076E-01	-0.7578148E-01	-0.7022261E-01	0.	-0.6676305E-01
-0.6181594E-01	-0.5133912E-01	-0.3886928E-01	-0.2162858E-01	0.3213158E-03	0.2237035E-01	0.4300378E-01
0.6091084E-01	0.8095672E-01	-0.6937343E-01	-0.6485826E-01	0.	-0.6456277E-01	-0.5811635E-01
-0.4850192E-01	-0.3575271E-01	-0.2062641E-01	-0.3548127E-02	0.1470768E-01	0.3355592E-01	0.5257132E-01
0.3216465E-01	0.1154707E-01	0.	0.1082326E-01	-0.7320112E-02	-0.2332323E-01	-0.3553102E-01
-0.4338025E-01	-0.4702755E-01	-0.4665929E-01	-0.4276450E-01	-0.3648022E-01	0.6687467E-01	0.5724419E-01
0.	0.5678551E-01	0.4624949E-01	0.3367449E-01	0.1956697E-01	0.4690481E-02	-0.1062274E-01
-0.2578866E-01	-0.4045127E-01	-0.5457011E-01	-0.3266279E-01	-0.1273592E-01	0.	-0.1203115E-01
0.5543509E-02	0.2111438E-01	0.3310405E-01	0.4091843E-01	0.4474201E-01	0.4473157E-01	0.4135108E-01
0.3568410E-01	-0.8265831E-01	-0.8485957E-01	-0.	-0.8477479E-01	-0.8373320E-01	-0.7804477E-01
-0.6672679E-01	-0.5021760E-01	-0.2889744E-01	-0.3889563E-02	0.2368271E-01	0.5259867E-01	-0.1667326E-01
-0.9476791E-02	-0.	-0.9198044E-02	-0.2530708E-02	0.3920770E-02	0.9560349E-02	0.1409444E-01
0.1748046E-01	0.1967318E-01	0.2078530E-01	0.2115829E-01	0.8689878E-01	0.9755815E-01	-0.
0.9773457E-01	0.1035888E-00	0.1031099E-00	0.9443269E-01	0.7775430E-01	0.5356848E-01	0.2326838E-01
-0.1155993E-01	-0.4895272E-01	0.2053019E-01	0.2080378E-01	-0.	0.2076914E-01	0.2020609E-01
0.1844365E-01	0.1523981E-01	0.1069634E-01	0.4951485E-02	-0.1716506E-02	-0.9008689E-02	-0.1662556E-01
-0.2628359E-01	-0.2788068E-01	-0.2706476E-01	-0.2625560E-01	-0.2543920E-01	-0.2464037E-01	-0.2383985E-01
-0.2303170E-01	-0.2223651E-01	-0.2143558E-01	-0.2066121E-01	-0.1988723E-01	-0.1912055E-01	-0.1835783E-01
-0.1762074E-01	-0.1687313E-01	-0.1615045E-01	-0.1547256E-01	-0.1482973E-01	-0.1425177E-01	-0.1372571E-01
-0.1323861E-01	-0.1277829E-01	-0.2117724E-02	-0.1304758E-01	-0.1233000E-01	-0.1189239E-01	-0.1148256E-01
0.1249769E-04	-0.	0.1075836E-02	-0.1042018E-01	-0.	-0.	-0.
-0.	0.1192392E-01	0.1206179E-01	0.1131246E-01	0.1082051E-01	-0.	0.1035819E-01
0.9717913E-02	0.8411345E-02	0.6897972E-02	0.4830614E-02	0.2198498E-02	-0.4815325E-03	-0.3055354E-02
-0.5396555E-02	-0.8141738E-02	0.3739251E-01	0.3226210E-01	-0.1488396E-15	0.3203754E-01	0.2659757E-01
0.1951192E-01	0.1032414E-01	-0.4622955E-03	-0.1157327E-01	-0.2075962E-01	-0.2608955E-01	-0.2851240E-01
0.5692850E-01	0.3547116E-01	-0.8666217E-16	0.3470349E-01	0.1539625E-01	-0.3218851E-02	-0.2045168E-01
-0.3571250E-01	-0.4830169E-01	-0.5658426E-01	-0.5953423E-01	-0.5945764E-01	-0.3754093E-01	-0.2428391E-01
-0.1344116E-15	-0.2374910E-01	-0.1103222E-01	0.1306201E-02	0.1063333E-01	0.1722696E-01	0.2167631E-01
0.2548029E-01	0.3007615E-01	0.3462599E-01	-0.6465646E-01	-0.4912328E-01	-0.1008628E-15	-0.4842273E-01
-0.3224472E-01	-0.1492314E-01	0.1591670E-02	0.1602314E-01	0.2864650E-01	0.4026857E-01	0.5166507E-01
0.6152938E-01	-0.2102572E-01	-0.1886597E-01	0.3066202E-16	-0.1862098E-01	-0.1420805E-01	-0.8496855E-02
-0.3905395E-02	0.1333003E-02	0.4881429E-02	0.8786971E-02	0.1415595E-01	0.2026635E-01	0.7590747E-01
0.7356281E-01	0.2220836E-17	0.7327395E-01	0.6754571E-01	0.5711942E-01	0.4132887E-01	0.2117201E-01
-0.1551485E-02	-0.2371086E-01	-0.4245489E-01	-0.5748930E-01	0.1814476E-01	0.1843295E-01	-0.8091853E-17
0.1845502E-01	0.1861619E-01	0.1751905E-01	0.1398528E-01	0.7885317E-02	0.1530078E-03	-0.7271258E-02
-0.1261769E-01	-0.1621418E-01	-0.8101873E-01	-0.7843520E-01	-0.2726540E-17	-0.7803430E-01	-0.7061848E-01
-0.5833204E-01	-0.4239240E-01	-0.2445636E-01	-0.4942806E-02	0.1596275E-01	0.3793164E-01	0.5902390E-01
-0.2888663E-04	-0.2833026E-04	-0.2648058E-04	-0.2648057E-04	0.4556160E-04	0.4023130E-04	0.1330328E-01
0.1328444E-01	-0.7569603E-02	-0.7555789E-02	-0.1416652E-01	-0.1413978E-01	0.8429856E-02	0.8416294E-02
0.7815050E-02	0.1251877E-01	0.1627792E-02	0.2489841E-02	-0.7105525E-02	-0.1134511E-01	-0.2325497E-02
-0.3641882E-02	0.1474788E-04	-0.2061973E-04	-0.1485608E-03	0.4441067E-06	0.9698080E-02	0.8599407E-01
-0.3417794E-02	0.6242121E-04	0.6312154E-04	-0.5591661E-04	-0.9475448E-02	-0.1379571E-01	-0.8273232E-01
0.6156468E-04	-0.3636284E-04	0.1052802E-03	-0.1362247E-01	-0.9439781E-01	0.1484512E-01	0.5559825E-04
0.8619929E-04	0.2755755E-03	0.9106100E-02	0.6189952E-02	0.9617024E-01	0.5747524E-04	0.2306470E-03
0.8003553E-04	0.8661284E-01	-0.7257795E-02	0.7034328E-02	-0.1822443E-04	-0.1442071E-03	-0.7202759E-04
-0.1196492E-01	-0.8724074E-01	-0.1282105E-02	-0.2062799E-03	0.7836526E-04	-0.1415598E-03	-0.8683278E-01
0.1046401E-01	-0.7043396E-02	0.3259946E-04	0.1566578E-03	-0.5709704E-04	0.1059297E-01	0.9023077E-01
0.1137968E-02	0.1725287E-03	-0.3988736E-04	-0.1860943E-04			

SA-5 RUN #3 MODE 10 XN = 3.143391

0.1845015E-00	0.1821304E-00	0.1770900E-00	0.1721572E-00	0.1672395E-00	0.1623435E-00	0.1574708E-00
0.1526245E-00	0.1477748E-00	0.1429686E-00	0.1382242E-00	0.1335580E-00	0.1289359E-00	0.1243665E-00
0.1198619E-00	0.1154311E-00	0.1110941E-00	0.1069049E-00	0.1030988E-00	0.9968560E-01	0.9659261E-01
0.9377130E-01	0.9110998E-01	0.1440603E-00	0.9264227E-01	0.8853914E-01	0.8606288E-01	0.8368009E-01
0.	0.	-0.9177053E-00	0.7790231E-01	0.	0.	0.
0.	-0.7317493E-01	-0.7593111E-01	-0.6803597E-01	-0.6486288E-01	0.	-0.6151491E-01
-0.5673084E-01	-0.4662604E-01	-0.3465496E-01	-0.1819753E-01	0.2608983E-02	0.2334972E-01	0.4261562E-01
0.5916258E-01	0.7757173E-01	-0.5219409E-01	-0.2591032E-01	0.	-0.2495508E-01	-0.1291331E-02
0.2745456E-01	0.3827422E-01	0.5133469E-01	0.5973747E-01	0.6360801E-01	0.6334427E-01	0.6023443E-01
0.3336201E-01	0.1670220E-01	0.	0.1609680E-01	0.1097319E-02	-0.1267021E-01	-0.2393171E-01
-0.3210747E-01	-0.3730249E-01	-0.3953739E-01	-0.3912433E-01	-0.3682452E-01	0.5258952E-01	0.2680045E-01
0.	0.2585940E-01	0.2591247E-01	-0.1887118E-01	-0.3657621E-01	-0.4967294E-01	-0.5828119E-01
-0.6243101E-01	-0.6255519E-01	-0.5989249E-01	-0.5333307E-01	-0.1637563E-01	0.	-0.1576012E-01
-0.5202828E-03	0.1342810E-01	0.2477445E-01	0.3294925E-01	0.3804946E-01	0.4011922E-01	0.3947169E-01
0.3695374E-01	-0.8736639E-01	-0.1075915E-00	-0.	-0.1080845E-00	-0.1218628E-00	-0.1275883E-00
-0.1223753E-00	-0.1061852E-00	-0.7957309E-01	-0.4426436E-01	-0.2365029E-02	0.4335292E-01	-0.1704792E-01
-0.1715336E-01	-0.	-0.1711871E-01	-0.1558304E-01	-0.1507276E-01	-0.1244367E-01	-0.8747550E-02
-0.4100368E-02	0.1267637E-02	0.7112995E-02	0.1318446E-01	0.8689258E-01	0.1064466E-00	-0.
0.1069141E-00	0.1201578E-00	0.1254922E-00	0.1200977E-00	0.1039618E-00	0.7760392E-01	0.4270872E-01
0.1327694E-02	-0.4381802E-01	0.2133426E-01	0.2989941E-01	-0.	0.3003962E-01	0.3630782E-01
0.3996467E-01	0.3993025E-01	0.3610791E-01	0.2669407E-01	0.1822014E-01	0.5385363E-02	-0.8852093E-02
-0.3739654E-01	-0.3684782E-01	-0.3574141E-01	-0.3464167E-01	-0.3353729E-01	-0.3244668E-01	-0.3135781E-01
-0.3026609E-01	-0.2918277E-01	-0.2810087E-01	-0.2704346E-01	-0.2599299E-01	-0.2495061E-01	-0.2391821E-01
-0.2290756E-02	-0.2189752E-01	-0.2091335E-01	-0.1997655E-01	-0.1909753E-01	-0.1830007E-01	-0.1756997E-01
-0.1689161E-01	-0.1624604E-01	-0.2443553E-01	-0.1662173E-01	-0.1561598E-01	-0.1500335E-01	-0.1441934E-01
-0.4923536E-03	-0.	0.1496526E-02	-0.1290862E-01	-0.	-0.	-0.
-0.	0.1301714E-01	0.1334656E-01	0.1199209E-01	0.1122427E-01	-0.	0.1051005E-01
0.9537751E-02	0.7617132E-02	0.5484614E-02	0.2694857E-02	-0.6836689E-03	-0.3931470E-02	-0.6861345E-02
-0.9287732E-02	-0.1185891E-01	0.3463236E-01	0.2292177E-01	-0.7312550E-16	0.2246746E-01	0.1145580E-01
0.5256020E-03	-0.9560441E-02	-0.1885640E-01	-0.2458386E-01	-0.2905586E-01	-0.3239699E-01	-0.3549984E-01
0.5520523E-01	0.3786813E-01	0.2671411E-16	0.3719701E-01	0.2066202E-01	0.3950078E-02	-0.1182890E-01
-0.2564719E-01	-0.3697166E-01	-0.4548051E-01	-0.5196697E-01	-0.5744062E-01	-0.3536687E-01	-0.2296899E-01
0.2133653E-16	-0.2249527E-01	-0.1094238E-01	0.1877712E-03	0.9946133E-02	0.1802752E-01	0.2482440E-01
0.3016273E-02	0.3329250E-01	0.3424404E-01	-0.3662198E-01	-0.3886519E-01	0.1246410E-15	-0.3817546E-01
-0.2147598E-01	-0.4731309E-02	0.1071650E-01	0.2421299E-01	0.3596438E-01	0.4563397E-01	0.5222028E-01
0.5584464E-01	-0.1621492E-01	-0.1485562E-01	-0.1993364E-17	-0.1475155E-01	-0.1260844E-01	-0.9730473E-02
-0.6324939E-02	-0.2486396E-02	0.1910261E-02	0.6018565E-02	0.1076375E-01	0.1378245E-01	0.7275356E-01
0.7019496E-01	0.1002541E-16	0.6984081E-01	0.6314835E-01	0.5172021E-01	0.3592809E-01	0.1731558E-01
-0.2709205E-02	-0.2254531E-01	-0.4141279E-01	-0.5885392E-01	0.1616329E-01	0.1577540E-01	0.5750348E-16
0.1576473E-02	0.1435661E-01	0.1179689E-01	0.8063629E-02	0.3618877E-02	-0.9600409E-03	-0.5319521E-02
-0.9802932E-02	-0.1464519E-01	-0.7448592E-01	-0.7155015E-01	-0.1311288E-16	-0.7117899E-01	-0.6408536E-01
-0.5248900E-01	-0.3692015E-01	-0.1861681E-01	0.1668850E-02	0.2242163E-01	0.4156661E-01	0.5770869E-01
-0.2642986E-04	-0.2624041E-04	-0.2561055E-04	-0.2561055E-04	0.4229946E-04	0.2179802E-04	0.1251948E-01
0.1250[illegible]4E-01	-0.7495207E-02	-0.7393343E-02	-0.1265015E-01	-0.1262656E-01	0.7499369E-02	.7488501E-02
0.6556700E-02	0.1093309E-01	0.1946833E-02	0.2917161E-02	-0.6835620E-02	-0.1088098E-01	-0.1988700E-02
-0.2987005E-02	0.2046308E-06	-0.1830495E-04	-0.1363038E-03	0.4712595E-06	0.1101979E-01	0.8579176E-01
-0.1266518E-01	-0.1604715E-04	-0.1820464E-04	-0.1569414E-03	-0.8362252E-02	-0.1387375E-01	-0.8552911E-01
-0.1804619E-04	-0.1379591E-03	0.2477424E-03	-0.1176939E-01	-0.8625668E-01	0.1266663E-01	-0.2308254E-04
-0.9388494E-05	0.1416499E-03	0.8934285E-03	0.1547039E-01	0.8562490E-01	-0.2211972E-04	0.1144198E-03
-0.2230235E-04	0.8268647E-01	-0.1264295E-01	0.6308175E-02	-0.2158590E-04	-0.1366059E-03	0.1294565E-05
-0.1472554E-01	-0.9495730E-01	-0.1212823E-03	-0.1754173E-03	0.5658644E-04	-0.4862291E-04	-0.8274247E-01
0.1238131E-01	-0.6490838E-02	0.2515581E-04	0.1372271E-03	0.1744362E-04	0.1491383E-01	0.8455599E-01
0.1179118E-02	0.1708912E-03	-0.5666130E-04	0.6[illegible]6[illegible]3E-04			

SA-5 RUN #3 MODE 11 XN = 3.009716

0.4654272E-01	0.4572056E-01	0.4407932E-01	0.4244729E-01	0.4081986E-01	0.3919085E-01	0.3756658E-01
0.3593793E-01	0.3431870E-01	0.3269726E-01	0.3109048E-01	0.2949688E-01	0.2789209E-01	0.2630937E-01
0.2472717E-01	0.2316024E-01	0.2159985E-01	0.2007275E-01	0.1858478E-01	0.1715558E-01	0.1576252E-01
0.1441138E-01	0.1308343E-01	0.1488095E-01	0.1685128E-01	0.1176274E-01	0.1046222E-01	0.9176008E-02
0.	0.	-0.1265286E-01	0.5902290E-02	0.	0.	0.
0.	-0.1436560E-01	-0.1447325E-01	-0.1346452E-01	-0.1278117E-01	0.	-0.1207266E-01
-0.1100422E-01	-0.8631863E-02	-0.5770932E-02	-0.1921053E-02	0.2633714E-02	0.6628303E-02	0.9629732E-02
0.1120196E-01	0.1113562E-01	-0.2135008E-01	-0.3333994E-01	0.	-0.3059166E-01	-0.3708384E-01
-0.4053790E-01	-0.3995137E-01	-0.3565218E-01	-0.2786150E-01	-0.1729447E-01	-0.4548383E-02	0.9585500E-02
-0.7072604E-03	-0.1162966E-02	0.	-0.1149901E-02	-0.1249358E-02	-0.8838126E-03	0.1445655E-03
0.1486472E-02	0.3319554E-02	0.5352048E-02	0.7407327E-02	0.9369448E-02	0.1719260E-01	0.1706494E-01
0.	0.1700102E-01	0.1617050E-01	0.1429333E-01	0.1142349E-01	0.7577908E-02	0.2979908E-02
-0.2300519E-02	-0.8110752E-02	-0.1418619E-01	0.9378379E-03	0.1051109E-03	0.	0.6078610E-04
-0.9330048E-03	-0.2165367E-02	-0.3508574E-02	-0.4955015E-02	-0.6375574E-02	-0.7789394E-02	-0.9205485E-02
-0.1066906E-01	0.3565136E-01	0.1236290E-[illegible]	-0.	0.1264341E-00	0.1985352E-00	0.2536678E-00
0.2825325E-00	0.2828263E-00	0.2556001E-0	0.2039541E-00	0.1328678E-00	0.4993684E-01	-0.2217541E-01
-0.4004121E-01	-0.	-0.4055501E-01	-0.5436105E-01	-0.6351795E-01	-0.6601787E-01	-0.6192136E-01
-0.5138736E-01	-0.3539917E-01	-0.1499982E-01	0.8202622E-02	0.5082025E-01	0.1256698E-00	-0.
0.1280138E-00	0.1886734E-00	0.2339712E-0[illegible]	0.2560063E-00	0.2528534E-00	0.2256074E-00	0.1770808E-00
0.1116843E-0[illegible]	0.3604993E-01	0.2520514E-01	0.4982638E-01	-0.	0.5057348E-01	0.7016103E-01
0.8409124E-01	0.8947733E-01	0.8557394E-01	0.7268585E-01	0.5185341E-01	0.2486808E-01	-0.5699080E-02
0.6619165E-01	0.6478721E-01	0.6200717E-01	0.5921620E-01	0.5645140E-01	0.5367039E-01	0.5091226E-01
0.4817453E-01	0.4543196E-01	0.4272405E-01	0.3999673E-01	0.3732990E-01	0.3468514E-01	0.3205863E-01
0.2943670E-01	0.2688227E-01	0.2434714E-01	0.2182177E-01	0.1949365E-01	0.1730839E-01	0.1523131E-01
0.1326331E-01	0.1134954E-01	0.1899047E-02	0.1244431E-01	0.9475695E-02	0.7635555E-02	0.5804228E-02
0.2605364E-05	-0.	-0.1387946E-02	0.1136400E-02	-0.	-0.	-0.
-0.	-0.5665082E-02	-0.6267312E-02	-0.3415183E-02	-0.1847200E-02	-0.	-0.3980963E-03
0.1528263E-02	0.5098829E-02	0.8635824E-02	0.1256435E-01	0.1619584E-01	0.1834012E-01	0.1890321E-01
0.1759280E-01	0.1391020E-01	0.9728423E-02	0.1578705E-01	-0.1243683E-15	0.1596846E-01	0.2092311E-01
0.2632829E-01	0.3275845E-01	0.3590018E-01	0.2949444E-01	0.1568928E-01	0.1209544E-01	0.2783051E-01
0.9671505E-02	-0.1849305E-01	-0.1304148E-14	-0.1939812E-01	-0.4253081E-01	-0.5813528E-01	-0.6212532E-01
-0.5828766E-01	-0.5499120E-01	-0.5314352E-01	-0.3874738E-01	-0.6458646E-02	-0.2347839E-02	-0.2186378E-01
-0.1025332E-14	-0.2245181E-01	-0.3764701E-01	-0.4643420E-01	-0.4621179E-01	-0.4133392E-01	-0.3956148E-01
-0.4057172E-01	-0.2935842E-01	-0.1177269E-03	0.5917093E-02	0.3185006E-01	-0.2336875E-14	0.3261996E-01
0.5286481E-01	0.6880240E-01	0.8002272E-01	0.8288406E-01	0.7177316E-01	0.4947967E-01	0.3519923E-01
0.4101749E-01	-0.6858158E-02	-0.1379847E-01	0.6605895E-16	-0.1393682E-01	-0.1855226E-01	-0.1790192E-01
-0.1058376E-01	-0.7948670E-03	0.4616883E-02	0.4501352E-02	0.1059943E-01	0.3025726E-01	0.1846765E-01
0.1553658E-01	-0.1062581E-14	0.1540419E-01	0.1238840E-01	0.1151906E-01	0.1394941E-01	0.1644306E-01
0.1273359E-01	0.2352115E-02	-0.1855375E-02	0.9126535E-02	0.1930202E-01	0.1643421E-01	-0.1504949E-14
0.1620817E-01	0.1168507E-01	0.8508848E-02	0.8117392E-02	0.7619426E-02	0.1055470E-02	-0.1125997E-01
-0.1632097E-01	-0.5905186E-02	-0.5223396E-02	-0.1113406E-01	0.2529442E-15	-0.1139761E-01	-0.1709321E-01
-0.1930598E-01	-0.1586884E-01	-0.9701018E-03	-0.7310361E-02	-0.9784276E-02	-0.5285410E-02	0.1400905E-01
0.4496537E-03	0.4463858E-03	0.4355412E-03	0.4355412E-03	-0.6176580E-03	-0.1832828E-03	-0.5562004E-03
-0.5477187E-03	-0.1823248E-02	-0.1838676E-02	0.4483217E-03	0.4303854E-03	0.2283538E-02	0.2240734E-02
-0.1195836E-02	-0.1142974E-02	-0.3746569E-02	-0.3909353E-02	0.3851448E-03	-0.2467043E-03	0.4748646E-02
0.5362444E-02	-0.1043417E-03	-0.3576996E-04	0.9372337E-05	-0.4678608E-06	-0.5805676E-02	0.1656517E-01
0.9092[illegible]E-02	0.4076429E-03	0.1318546E-03	0.2664525E-03	-0.3099051E-02	0.1682853E-01	-0.1326122E-01
0.4188295E-03	0.2064864E-03	0.2317087E-03	-0.6701622E-03	-0.6812981E-02	-0.1575321E-01	0.4198950E-03
0.2381177E-03	0.2056609E-03	-0.5622524E-02	-0.7031478E-02	0.5658636E-02	0.4174283E-03	0.9384419E-04
0.1944243E-03	0.1151581E-01	0.1623083E-01	0.1614782E-02	-0.5015029E-04	-0.9090413E-05	-0.1710213E-03
0.1011648E-01	-0.6120271E-02	-0.1116359E-02	0.1566716E-04	0.7366572E-04	-0.1850701E-03	-0.1204345E-01
-0.8845654E-02	0.5838689E-03	0.1204656E-04	-0.5270209E-06	-0.1415794E-03	-0.1071348E-01	0.1579648E-01
0.2159944E-02	0.4545256E-04	-0.5428742E-04	-0.1612380E-03			

SA-5 RUN #3 MODE 12 XN = 2 385318

0.1246461E-00	0.1226965E-00	0.1187986E-00	0.1149361E-00	0.1113254E-00	0.1071655E-00	0.1033261E-00
0.9953224E-01	0.9569045E-01	0.9191167E-01	0.8818316E-01	0.8452223E-01	0.8096601E-01	0.7732868E-01
0.7381032E-01	0.7035480E-01	0.6698235E-01	0.6373179E-01	0.6081622E-01	0.5823925E-01	0.5593531E-01
0.5386621E-01	0.5193199E-01	0.4989412E-01	0.4801412E-01	0.4607875E-01	0.4830123E-01	0.4660386E-01
0.	0.	-0.3802879E-02	0.4269091E-01	0.	0.	0.
0.	-0.7433001E-01	-0.7265814E-01	-0.7561932E-01	-0.7597560E-01	0.	-0.7619952E-01
-0.7624987E-01	-0.7530496E-01	-0.7256158E-01	-0.6646639E-01	-0.5542567E-01	-0.4086413E-01	-0.2414813E-01
-0.5922569E-02	0.1750863E-01	-0.3942136E-01	0.2134568E-02	0.	0.3507070E-02	0.3833218E-01
0.6617767E-01	0.8329156E-01	0.8966819E-01	0.8403502E-01	0.6929423E-01	0.4642981E-01	0.1829116E-01
0.2908415E-01	0.2299321E-02	0.	0.1472265E-02	-0.2114272E-01	-0.3931570E-01	-0.5068229E-01
-0.5479721E-01	-0.5197949E-01	-0.4297079E-01	-0.2858939E-01	-0.1082531E-01	0.3941610E-01	-0.1953552E-02
0.	-0.3309035E-02	-0.3799877E-01	-0.6573464E-01	-0.8280333E-01	-0.8856665E-01	-0.8358077E-01
-0.5892666E-01	-0.4617618E-01	-0.1819995E-01	-0.2904464E-01	-0.2323259E-02	0.	-0.1440476E-02
0.2106361E-01	0.3920221E-01	0.5052043E-01	0.5463373E-01	0.5182348E-01	0.4278543E-01	0.2853133E-01
0.1189981E-01	-0.3740992E-01	0.3169908E-01	-0.	0.3398935E-01	0.9210115E-01	0.1389209E-00
0.1671989E-00	0.1750510E-00	0.1626322E-00	0.1319479E-00	0.8644459E-01	0.3179175E-01	-0.7266442E-02
0.5228197E-02	-0.	0.3576415E-01	0.1245145E-01	0.1969491E-01	0.2420150E-01	0.2567882E-01
0.2412852E-01	0.1983127E-01	0.1328415E-01	0.5332591E-02	0.3745836E-01	-0.3163540E-01	-0.
-0.3392595E-01	-0.9203769E-01	-0.1388538E-00	-0.1671633E-00	-0.1750265E-00	-0.1626389E-00	-0.1319924E-00
-0.8653354E-01	-0.3192990E-01	0.7288175E-02	-0.3248457E-02	-0.	-0.3600761E-02	-0.1251043E-01
-0.1976356E-01	-0.2426902E-01	-0.2570416E-01	-0.2411947E-01	-0.1980657E-01	-0.1329037E-01	-0.5422806E-02
-0.2673522E-01	-0.2824350E-01	-0.2725816E-01	-0.2627561E-01	-0.2529514E-01	-0.2431903E-01	-0.2334814E-01
-0.2238117E-01	-0.2141554E-01	-0.2045994E-01	-0.1951556E-01	-0.1858607E-01	-0.1766477E-01	-0.1675641E-01
-0.1585699E-01	-0.1497674E-01	-0.1411319E-01	-0.1328237E-01	-0.1252428E-01	-0.1184418E-01	-0.1122891E-01
-0.1.607674E-01	-0.1013586E-01	-0.2161692E-01	-0.1744284E-01	-0.9621248E-02	-0.9126265E-02	-0.8650588E-02
-0.5024.32E-05	-0.	0.5918568E-03	-0.7570162E-02	-0.	-0.	-0.
-0.	0.1656927E-01	0.1628566E-01	0.1592057E-01	0.1711504E-01	-0.	0.1724906E-01
0.1736148E-02	0.1729271E-01	0.1677291E-01	0.1546952E-01	0.1302011E-01	0.9763615E-02	0.6041582E-02
0.2221479E-02	-0.3021797E-02	0.4986009E-01	0.6447391E-01	-0.5432294E-15	0.6485077E-01	0.7439683E-01
0.7781421E-01	0.7397859E-01	0.6412109E-01	0.5041335E-01	0.3443171E-01	0.1712223E-01	0.1308723E-02
0.7236440E-01	0.9529783E-01	0.1663356E-16	0.9582544E-01	0.1110998E-00	0.1169734E-00	0.1116509E-00
0.9661291E-01	0.7560766E-01	0.5066275E-01	0.2497936E-01	0.2263792E-02	-0.5144309E-01	-0.6545713E-01
-0.4222184E-16	-0.6578149E-01	-0.7497427E-01	-0.7838561E-01	-0.7492856E-01	-0.6493313E-01	-0.4969425E-01
-0.3195213E-01	-0.1625116E-01	-0.5835483E-02	-0.7589469E-01	-0.9612136E-01	0.3128385E-15	-0.9663083E-01
-0.1113868E-00	-0.1171933E-00	-0.1123978E-00	-0.9773534E-01	-0.7532102E-01	-0.4888784E-01	-0.2441998E-01
-0.6868547E-02	-0.1372349E-01	-0.1333176E-01	0.5576276E-16	-0.1330219E-01	-0.1283729E-01	-0.1233298E-01
-0.1164381E-01	-0.1035035E-01	-0.7955001E-02	-0.4828547E-02	-0.2546136E-02	-0.1915903E-02	0.7411563E-01
0.7773094E-01	-0.1078722E-15	0.7788509E-01	0.8108402E-01	0.8120289E-01	0.7636899E-01	0.6657501E-01
0.5315509E-01	0.3743590E-01	0.2017880E-01	0.3054938E-02	0.1184275E-01	0.1255894E-01	0.3169188E-15
0.1258868E-01	0.1318559E-01	0.1294991E-01	0.1156778E-01	0.9447202E-02	0.7291411E-02	0.5188458E-02
0.2160452E-02	-0.1966476E-02	-0.7552081E-01	-0.7758573E-01	-0.3553730E-17	-0.7769003E-01	-0.7960339E-01
-0.7922465E-01	-0.7501726E-01	-0.6619347E-01	-0.5251266E-01	-0.3632632E-01	-0.2003128E-01	-0.6663191E-02
0.1392457E-04	0.1406544E-04	0.1451362E-04	0.1451362E-04	-0.7894257E-05	-0.3517725E-04	0.1424411E-01
0.1421661E-01	-0.9835853E-02	-0.9815932E-02	-0.1416931E-01	-0.1413719E-01	0.9775438E-02	0.9753537E-02
0.9455468E-02	0.1587309E-01	0.1970987E-02	0.3722291E-02	-0.9410724E-02	-0.1580193E-01	-0.1981989E-02
-0.3114580E-02	-0.1400520E-04	-0.3816616E-04	-0.1866[illegible]8E-03	0.2654586E-06	0.1129240E-01	0.2593796E-01
-0.3191591E-02	-0.5590613E-04	-0.2342929E-04	-0.2428177E-03	-0.1426053E-01	-0.6469756E-02	-0.2443316E-01
-0.5983308E-04	-0.1582018E-03	-0.1942242E-04	-0.1052258E-01	-0.2860625E-01	0.8468710E-02	-0.6131446E-04
0.8331993E-04	0.1403081E-03	0.1498592E-01	0.3778411E-02	0.2976319E-01	-0.5701778E-04	0.2197657E-03
-0.8161248E-04	0.2501902E-01	-0.5637489E-02	0.7982508E-02	-0.4734288E-04	-0.1914661E-03	0.9859565E-05
-0.4779223E-02	-0.2679907E-01	-0.1381305E-02	-0.2113479E-05	0.4479318E-04	-0.1359092E-04	-0.2491315E-01
0.5892257E-02	-0.8187942E-02	0.4443586E-04	0.1897945E-03	0.8096751E-05	0.4728257E-02	0.2501830E-01
0.1168648E-02	0.2077194E-03	-0.4660015E-04	0.3291556E-04			

SA-5 RUN #3 MODE 13 XN = 1.885757

0.5318373E-02	0.5160798E-02	0.4844877E-02	0.4529140E-02	0.4214147E-02	0.3900394E-02	0.3587630E-02
0.3275813E-02	0.2964996E-02	0.2655343E-02	0.2348032E-02	0.2043910E-02	0.1741767E-02	0.1441418E-02
0.1143770E-02	0.8486942E-03	0.5573809E-03	0.2714375E-03	-0.1703145E-06	-0.2575691E-03	-0.5032989E-03
-0.7395800E-03	-0.9704276E-03	-0.2311257E-02	-0.8369899E-03	-0.1198105E-02	-0.1422773E-02	-0.1644636E-02
-0.	-0.	0.1198704E-03	-0.2395512E-02	-0.	-0.	-0.
-0.	-0.7000266E-03	-0.5627952E-03	-0.7685464E-03	-0.8014450E-03	-0.	-0.8255485E-03
-0.8480497E-03	-0.8623673E-03	-0.8441838E-03	-0.7880576E-03	-0.6970444E-03	-0.6150024E-03	-0.5819937E-03
-0.6322576E-03	-0.9152153E-03	-0.4377172E-03	0.2831626E-03	-0.	0.3059014E-03	0.8873709E-03
0.1311837E-02	0.1508125E-02	0.1475027E-02	0.1226896E-02	0.7957362E-03	0.2173341E-03	-0.4541362E-03
-0.1354877E-03	0.7228495E-04	-0.	0.7857111E-04	0.2463854E-03	0.3702636E-03	0.4258051E-03
0.4230062E-03	0.3561899E-03	0.2395245E-03	0.8491092E-04	-0.9207191E-04	0.4253384E-03	-0.2780772E-03
-0.	-0.2995348E-03	-0.8649870E-03	-0.1274424E-02	-0.1460911E-02	-0.1422628E-02	-0.1173659E-02
-0.7438088E-03	-0.1709325E-03	0.4878835E-03	0.1240536E-03	-0.6036410E-04	-0.	-0.6602849E-04
-0.2148411E-03	-0.3255577E-03	-0.3837709E-03	-0.3801076E-03	-0.3254315E-03	-0.2227714E-03	-0.8063845E-04
0.8716444E-04	-0.1476409E-02	-0.5339500E-02	0.	-0.5453928E-02	-0.8457229E-02	-0.1046213E-01
-0.1101130E-01	-0.1002265E-01	-0.7594264E-02	-0.3943834E-02	0.6290999E-03	0.5730947E-02	0.6422985E-03
0.5245657E-02	0.	0.5384104E-02	0.9070288E-02	0.1147869E-01	0.1227506E-01	0.1130299E-01
0.8651387E-02	0.4573309E-02	-0.5883836E-03	-0.6374455E-02	-0.1090375E-02	-0.5645282E-02	0.
-0.5781773E-02	-0.9352057E-02	-0.1178757E-01	-0.1255376E-01	-0.1155333E-01	-0.8886814E-02	-0.4800643E-02
0.3633146E-03	0.6148605E-02	0.1530636E-02	0.4642281E-02	0.	0.4732592E-02	0.7113487E-02
0.8633605E-02	0.8915964E-02	0.7957436E-02	0.5692999E-02	0.2467144E-02	-0.1515418E-02	-0.5926387E-02
0.3869266E-02	0.3757553E-02	0.3533108E-02	0.3379290E-02	0.3085467E-02	0.2862824E-02	0.2640679E-02
0.2418717E-02	0.2197442E-02	0.1976990E-02	0.1758492E-02	0.1541517E-02	0.1325519E-02	0.1110790E-02
0.8981146E-03	0.6862131E-03	0.4771238E-03	0.2724895E-03	0.7538195E-04	-0.1125915E-03	-0.2932705E-03
-0.4681933E-03	-0.6395274E-03	-0.1594789E-02	-0.5401686E-03	-0.8091967E-03	-0.9770465E-03	-0.1142460E-02
-0.1439194E-03	0.	0.8559306E-04	-0.1594065E-02	0.	0.	0.
0.	-0.6822328E-03	-0.4907031E-03	-0.7933237E-03	-0.8269480E-03	0.	-0.8517068E-03
-0.8748442E-03	-0.8890322E-03	-0.8679906E-03	-0.8027818E-03	-0.6898936E-03	-0.5708833E-03	-0.4855607E-03
-0.4664928E-03	-0.6202630E-03	-0.4729192E-01	-0.1125212E-00	-0.3743186E-15	-0.1143508E-00	-0.1634860E-00
-0.1940568E-00	-0.2007603E-00	-0.1851020E-00	-0.1517388E-00	-0.1072259E-00	-0.6042782E-01	-0.2132138E-01
0.3363013E-01	0.1168430E-00	-0.1010971E-15	0.1192279E-00	0.1827893E-00	0.2237796E-00	0.2353522E-00
0.2193679E-00	0.1816166E-00	0.1297131E-00	0.7343337E-01	0.2487178E-01	-0.4730369E-01	-0.1139943E-00
-0.1251561E-15	-0.1158668E-00	-0.1661316E-00	-0.1974553E-00	-0.2044082E-00	-0.1885240E-00	-0.1545475E-00
-0.1091586E-00	-0.6138638E-01	-0.2140376E-01	0.3430366E-01	0.1220652E-00	0.1287648E-15	0.1245824E-00
0.1916437E-00	0.2349315E-00	0.2472092E-00	0.2304200E-00	0.1906240E-00	0.1358242E-00	0.7630253E-01
0.2476018E-01	-0.1299699E-01	-0.1440109E-01	0.4688962E-16	-0.1448035E-01	-0.1609113E-01	-0.1733235E-01
-0.1760282E-01	-0.1654873E-01	-0.1407178E-01	-0.1047357E-01	-0.6539542E-02	-0.2975844E-02	-0.1137234E-01
-0.1174951E-01	-0.1715471E-15	-0.1178458E-01	-0.1238947E-01	-0.1276920E-01	-0.1253278E-01	-0.1142472E-01
-0.9339765E-02	-0.6514154E-02	-0.3621435E-02	-0.1219915E-02	-0.1081357E-01	-0.1090538E-01	0.1396350E-15
-0.1093491E-01	-0.1137814E-01	-0.1172555E-01	-0.1158587E-01	-0.1066854E-01	-0.8821106E-02	-0.6229634E-02
-0.3485036E-02	-0.1059341E-02	-0.1243399E-01	-0.1347214E-01	0.7586482E-17	-0.1346165E-01	-0.1464148E-01
-0.1547716E-01	-0.1546630E-01	-0.1431804E-01	-0.1195022E-01	-0.8661432E-02	-0.5228324E-02	-0.2333081E-02
-0.3264948E-05	-0.3211528E-05	-0.3059327E-05	-0.3039324E-05	0.3555755E-04	0.3566491E-04	-0.1129229E-03
-0.1125971E-03	-0.1304069E-03	-0.1298809E-03	0.3364581E-03	0.3353016E-03	-0.1051725E-03	-0.1046337E-03
-0.8674217E-02	-0.1395078E-01	0.7832481E-02	0.1313992E-01	-0.8025443E-02	-0.1332053E-01	0.8872404E-02
0.1412454E-01	0.1391783E-04	-0.2129635E-05	0.3394519E-05	0.4303580E-05	0.1020614E-01	0.5788477E-03
0.9253787E-02	0.1393214E-04	0.2337212E-03	-0.4058538E-04	-0.1231481E-01	-0.2814211E-02	-0.7727749E-02
-0.3504133E-04	-0.2359806E-03	0.4011424E-04	0.1786312E-01	0.2562433E-02	0.1069716E-01	0.1541400E-04
0.2424851E-03	-0.4581192E-04	-0.1316779E-01	-0.1292371E-02	-0.1016508E-01	-0.3508155E-04	-0.2525046E-03
0.4102327E-04	-0.1130284E-01	-0.1662905E-02	-0.5728624E-03	-0.1735674E-03	0.9290785E-04	-0.1091386E-03
0.1083228E-01	0.1563352E-02	0.9894224E-03	0.1594114E-03	-0.1091951E-03	0.1196559E-03	-0.9385701E-02
-0.2427761E-03	-0.4646942E-03	-0.1705951E-03	0.8621231E-04	-0.1037101E-03	0.1268549E-01	-0.5141922E-03
0.1206252E-02	0.1584515E-03	-0.1191599E-03	0.1310871E-03			

SA-5 RUN #3 MODE 14 XN = 1.707959

0.3282341E-01	0.3242101E-01	0.3161724E-01	0.3081172E-01	0.3000615E-01	0.2920992E-01	0.2841636E-01
0.2762081E-01	0.2684004E-01	0.2606436E-01	0.2529548E-01	0.2454404E-01	0.2381248E-01	0.2307856E-01
0.2236862E-01	0.2166552E-01	0.2098792E-01	0.2033238E-01	0.1976458E-01	0.1927976E-01	0.1885945E-01
0.1849595E-01	0.1816495E-01	0.3657677E-01	0.1635485E-01	0.1785834E-01	0.1756455E-01	0.1729035E-01
-0.	-0.	-0.1367307E-02	0.1657559E-01	-0.	-0.	-0.
-0.	-0.2199452E-01	-0.2145781E-01	-0.2262646E-01	-0.2297753E-01	-0.	-0.2305262E-01
-0.2317556E-01	-0.2299851E-01	-0.2218182E-01	-0.2025796E-01	-0.1673294E-01	-0.1208635E-01	-0.6761046E-02
-0.9661746E-03	0.6549533E-02	-0.7490393E-02	0.1178648E-01	-0.	0.1241582E-01	0.2829446E-01
0.4529508E-01	0.4734172E-01	0.4857414E-01	0.4446228E-01	0.3561513E-01	0.2281498E-01	0.7444859E-02
0.1079100E-01	0.3925621E-02	-0.	0.3883849E-02	-0.2162583E-02	-0.6955978E-02	-0.1007925E-01
-0.1134394E-01	-0.1092755E-01	-0.9007325E-02	-0.5852033E-02	-0.1912339E-02	0.8512482E-02	-0.8057387E-02
-0.	-0.8582522E-02	-0.2236821E-01	-0.3327741E-01	-0.3965743E-01	-0.4139510E-01	-0.3874152E-01
-0.3212143E-01	-0.2219294E-01	-0.1013603E-01	-0.1246311E-01	-0.4021986E-02	-0.	-0.3801963E-02
0.1826798E-02	0.6659252E-02	0.1003274E-01	0.1191053E-01	0.1221322E-01	0.1109402E-01	0.8743031E-02
0.5579563E-02	-0.1089196E-01	0.1288984E-01	0.	0.1284545E-01	0.3200365E-01	0.4713677E-01
0.5574949E-01	0.5732470E-01	0.5188716E-01	0.4326843E-01	0.2374338E-01	0.4270467E-02	-0.3087262E-02
-0.6397999E-02	0.	-0.6502223E-02	-0.9225350E-02	-0.1062638E-01	-0.1088241E-01	-0.9696643E-02
-0.7251904E-02	-0.3733628E-02	0.5918932E-03	0.5389886E-02	0.1516024E-01	0.3230365E-02	0.
0.2818689E-02	-0.7612907E-02	-0.1667413E-01	-0.2324205E-01	-0.2685312E-01	-0.2745078E-01	-0.2514839E-01
-0.2033759E-01	-0.1387407E-01	0.1324509E-02	-0.1978351E-02	0.	-0.2072062E-02	-0.4654025E-02
-0.6441952E-02	-0.7174443E-02	-0.6384585E-02	-0.4524066E-02	-0.1606578E-02	0.2129639E-02	0.6359204E-02
-0.1384223E-01	-0.1358754E-01	-0.1309563E-01	-0.1258814E-01	-0.1209877E-01	-0.1159321E-01	-0.1109777E-01
-0.1762674E-01	-0.1012285E-01	-0.9649357E-02	-0.9157624E-02	-0.8688411E-02	-0.8221927E-02	-0.7767081E-02
-0.7297611E-02	-0.6862090E-02	-0.6422361E-02	-0.5971998E-02	-0.5581524E-02	-0.5222287E-02	-0.4888239E-02
-0.4582074E-02	-0.4286621E-02	-0.3880382E-02	-0.4452635E-02	-0.4001134E-02	-0.3727640E-02	-0.3447023E-02
0.1487523E-03	0.	0.3067971E-03	-0.2787743E-02	0.	0.	0.
0.	0.6918651E-02	0.6365639E-02	0.7561777E-02	0.7516634E-02	0.	0.7643299E-02
0.7776969E-02	0.7878620E-02	0.7716421E-02	0.7088273E-02	0.5745657E-02	0.3916581E-02	0.1923308E-02
-0.1473761E-04	-0.1789587E-02	0.7346213E-01	0.1259471E-00	0.8084686E-15	0.1271489E-00	0.1628754E-00
0.1827864E-01	0.1865400E-01	0.1766920E-01	0.1531293E-00	0.1133851E-00	0.5846197E-01	0.4916822E-02
0.5730104E-02	-0.7426693E-01	0.4673915E-15	-0.7688562E-01	-0.1426288E-00	-0.1884924E-00	-0.2331633E-00
-0.1865241E-01	-0.1473036E-01	-0.1004914E-01	-0.6213825E-01	-0.3602877E-01	0.4245823E-01	0.9948085E-01
0.7245161E-15	0.9161541E-01	0.1249391E-00	0.1449575E-00	0.1518919E-00	0.1476810E-00	0.1314989E-00
0.9999866E-01	0.5307110E-01	0.6063578E-02	-0.3922270E-01	-0.1374787E-00	0.5425682E-15	-0.1405545E-00
-0.2190924E-00	-0.2709220E-00	-0.2832815E-00	-0.2568518E-00	-0.2023225E-00	-0.1371117E-00	-0.8033805E-01
-0.3923153E-01	0.2621205E-01	0.2094352E-01	-0.1648556E-15	0.2022523E-01	0.8148441E-02	-0.5237753E-02
-0.1261911E-01	-0.1087965E-01	-0.3195117E-02	0.2451558E-02	-0.1325233E-02	-0.1146148E-01	0.5429619E-01
0.5678218E-01	-0.1095281E-16	0.5667424E-01	0.5607591E-01	0.5368193E-01	0.5276055E-01	0.5434803E-01
0.5492467E-01	0.4742594E-01	0.2655040E-01	-0.1470290E-02	0.3058455E-01	0.2515207E-01	0.4445803E-16
0.2447808E-01	0.1285660E-01	0.6025155E-04	-0.6991659E-02	-0.5462107E-02	0.1452946E-02	0.5902142E-02
0.3191963E-03	-0.1036489E-01	0.8906792E-02	0.1050931E-01	0.1275850E-16	0.1039504E-01	0.9492646E-02
0.8517699E-02	0.1137308E-01	0.1914135E-01	0.2779068E-01	0.2953003E-01	0.1807948E-01	-0.1335036E-02
0.1140113E-03	0.1109386E-03	0.1007286E-03	0.1007286E-03	-0.2425344E-03	-0.2391539E-03	0.7732566E-02
0.7708275E-02	-0.6053984E-02	-0.6052167E-02	-0.1353311E-02	-0.1359170E-02	-0.3277111E-03	-0.3331062E-03
0.1094436E-01	0.1784637E-01	-0.6836724E-02	-0.1145076E-01	0.4659487E-02	0.7720799E-02	-0.8924688E-02
-0.1424692E-01	-0.1269478E-03	-0.9646563E-03	-0.5843867E-04	-0.2182039E-04	0.3532334E-02	0.3122568E-01
-0.4542218E-01	-0.3642803E-03	-0.6823343E-03	-0.6377831E-03	0.1098716E-01	0.2056508E-01	-0.3628171E-01
-0.3979198E-03	-0.3012819E-03	-0.5430359E-03	-0.3625741E-02	0.1205611E-01	-0.4008589E-01	-0.3667385E-03
-0.6624667E-03	-0.5203981E-03	0.2059547E-01	0.2572142E-01	-0.1666621E-01	-0.3066013E-03	-0.1697729E-03
-0.5562918E-03	0.2146615E-01	-0.1083988E-01	0.3006442E-02	0.1299391E-03	-0.1848595E-03	0.4533228E-03
-0.1285312E-01	-0.1852036E-01	-0.1449166E-02	-0.1427997E-03	0.4033129E-04	0.2762699E-03	0.3741385E-02
-0.6940679E-02	-0.2134725E-02	0.1712539E-03	-0.6561324E-04	0.4511414E-03	-0.8788935E-02	0.3847463E-05
-0.5759254E-03	-0.1141955E-04	0.1678103E-04	0.2952938E-03			

SA-5 RUN #3 MODE 15 XN = 1.642528

0.7731439E-03	0.7500103E-03	0.7034520E-03	0.6560696E-03	0.6081491E-03	0.5615699E-03	0.5145388E-03
0.4682142E-03	0.4210844E-03	0.3753394E-03	0.3287125E-03	0.2828441E-03	0.2395700E-03	0.1936258E-03
0.1501226E-03	0.1059103E-03	0.6313140E-04	0.1936939E-04	-0.2034107E-04	-0.5753638E-04	-0.9315670E-04
-0.1272624E-03	-0.1605621E-03	-0.5560213E-03	-0.1412830E-03	-0.1922476E-03	-0.2247350E-03	-0.2569898E-03
-0.	-0.	0.1778864E-04	-0.3315812E-03	-0.	-0.	-0.
-0.	0.1101754E-03	0.1067645E-03	0.1129364E-03	0.1137323E-03	-0.	0.1142193E-03
0.1143162E-03	0.1122610E-03	0.1064629E-03	0.9388717E-04	0.7175594E-04	0.4360801E-04	0.1263886E-04
-0.1917086E-04	-0.5865587E-04	-0.9846219E-05	0.2353238E-03	-0.	0.2451337E-03	0.4367754E-03
0.5665302E-03	0.6144664E-03	0.5752507E-03	0.4584045E-03	0.2769122E-03	0.4390197E-04	-0.2194812E-03
-0.6056063E-03	-0.4345079E-03	-0.	-0.4296182E-03	-0.2600973E-03	-0.9059819E-04	0.5816698E-04
0.1892349E-03	0.2858122E-03	0.3459678E-03	0.3714511E-03	0.3707879E-03	0.1706492E-03	0.1812935E-03
-0.	0.1841852E-03	0.1799500E-03	0.1603134E-03	0.1218808E-03	0.6442618E-04	-0.2990803E-05
-0.7831320E-04	-0.1554741E-03	-0.2326445E-03	0.5359942E-03	0.1320901E-03	-0.	0.1177940E-03
-0.2173276E-03	-0.4777038E-03	-0.6228207E-03	-0.6522203E-03	-0.5628405E-03	-0.3720163E-03	-0.1014607E-03
0.2206305E-03	0.1252591E-03	-0.5021952E-03	0.	-0.5205831E-03	-0.1019759E-02	-0.1374366E-02
-0.1506067E-02	-0.1408400E-02	-0.1088345E-02	-0.5785600E-03	0.7418974E-04	0.8091137E-03	-0.3766759E-03
0.4154493E-03	0.	0.4382495E-03	0.1080604E-02	0.1545173E-02	0.1752473E-02	0.1680672E-02
0.1337967E-02	0.7637811E-03	0.1277246E-04	-0.8389091E-03	-0.2506532E-03	-0.6136857E-03	0.
-0.6222157E-03	-0.8924108E-03	-0.1046394E-02	-0.1044463E-02	-0.8777237E-03	-0.5622259E-03	-0.1249263E-03
0.3998888E-03	0.9710946E-03	0.5615241E-03	0.7090857E-03	0.	0.7130787E-03	0.7964821E-03
0.7882519E-03	0.6754328E-03	0.4533428E-03	0.1466092E-03	-0.2212267E-03	-0.6275439E-03	-0.1048170E-02
0.1913709E-02	0.1867068E-02	0.1769820E-02	0.1674566E-02	0.1576432E-02	0.1483626E-02	0.1389349E-02
0.1291990E-02	0.1198338E-02	0.1101533E-02	0.1011711E-02	0.9191072E-03	0.8273610E-03	0.7351101E-03
0.6490526E-03	0.5567457E-03	0.4694010E-03	0.3916927E-03	0.3118335E-03	0.2392561E-03	0.1723439E-03
0.1084109E-03	0.4758038E-04	-0.1132114E-02	0.8413813E-04	-0.1265708E-04	-0.7284935E-04	-0.1273887E-03
0.1334473E-02	0.	0.1224716E-04	-0.2844390E-03	0.	0.	0.
0.	0.5169376E-04	-0.6742097E-03	0.3354554E-03	0.2531708E-03	0.	0.1860299E-03
0.1089759E-03	-0.2347195E-05	-0.7982268E-04	-0.1337863E-03	-0.1502984E-03	-0.1299588E-03	-0.9087316E-04
-0.4178212E-04	0.8289560E-06	0.5360975E-01	-0.4072986E-01	0.6657468E-16	-0.4367534E-01	-0.1199073E-00
-0.1761918E-00	-0.2043661E-00	-0.2048105E-00	-0.1817942E-00	-0.1417291E-00	-0.9355144E-01	-0.4894845E-01
0.6602486E-01	-0.6982205E-02	0.5237918E-16	-0.9328912E-02	-0.6947366E-01	-0.1156890E-00	-0.1414913E-00
-0.1467215E-00	-0.1340866E-00	-0.1079449E-0	-0.7455606E-01	-0.4247091E-01	0.5426015E-01	-0.4091503E-01
0.7836403E-16	-0.4388571E-01	-0.1207984E-0	-0.1775921E-00	-0.2060188E-00	-0.2064794E-00	-0.1832637E-00
-0.1428401E-00	-0.9421625E-01	-0.4917400E-01	0.6545771E-01	-0.7278278E-02	0.6926311E-16	-0.9615612E-02
-0.6952565E-01	-0.1155440E-00	-0.1412152E-00	-0.1463791E-00	-0.1337482E-00	-0.1076733E-00	-0.7439983E-01
-0.4246127E-01	0.1036329E-00	0.1093726E-0	-0.1253619E-16	0.1096913E-00	0.1159134E-00	0.1177772E-00
0.1115618E-00	0.9628072E-01	0.7297351E-01	0.4423662E-01	0.1388410E-01	-0.1403448E-01	0.1046177E-00
0.1120050E-00	-0.4088817E-16	0.1124411E-0	0.1209364E-00	0.1250354E-00	0.1203240E-00	0.1054557E-00
0.8140253E-01	0.5091734E-01	0.1817888E-01	-0.1225482E-01	0.1049886E-00	0.1110118E-00	0.1606925E-16
0.1113444E-00	0.1178283E-00	0.1198629E-0	0.1136662E-00	0.9821170E-01	0.7458019E-01	0.4540702E-01
0.1458340E-01	-0.1375878E-01	0.1052333E-00	0.1127587E-00	0.4917017E-17	0.1132022E-00	0.1218398E-00
0.1260472E-00	0.1213701E-00	0.1064370E-00	0.8223128E-01	0.5152250E-01	0.1852229E-01	-0.1217147E-01
-0.1892373E-04	-0.1888318E-04	-0.1874748E-04	-0.1874747E-04	-0.2872031E-03	-0.3656568E-03	0.6206159E-03
0.6188817E-03	-0.5138047E-03	-0.5122694E-03	0.6553971E-03	0.6531994E-03	-0.6049954E-03	-0.6029007E-03
-0.1188964E-02	-0.1925066E-02	0.1114087E-02	0.1929551E-02	-0.1204111E-02	-0.1920938E-02	0.1284488E-02
0.2051378E-02	-0.1368805E-03	0.1727836E-06	0.3068465E-06	-0.3061366E-03	0.1275434E-01	0.1753148E-01
-0.1800578E-01	-0.3099860E-03	0.1067946E-03	-0.1249413E-03	0.8537721E-02	0.1674946E-01	-0.2090907E-01
-0.3151866E-03	0.3554857E-04	-0.9544972E-04	0.1290791E-01	0.1765395E-01	-0.1797020E-01	-0.3098087E-03
0.1083544E-03	-0.1264472E-03	0.8351542E-02	0.1673103E-01	-0.2108739E-01	-0.3149433E-03	0.3454205E-04
-0.9362437E-04	-0.8135082E-02	-0.1182434E-01	-0.2815772E-02	0.2560878E-04	0.1158675E-03	-0.3628269E-03
-0.5405412E-02	-0.1143096E-01	-0.2561976E-02	0.8795058E-04	0.7972370E-04	-0.3221459E-03	-0.8100917E-02
-0.1183727E-01	-0.2818405E-02	0.2506226E-04	0.1164715E-03	-0.3629968E-03	-0.5411288E-02	-0.1157504E-01
-0.2582417E-02	0.8777382E-04	0.7972715E-04	-0.3212365E-03			

SA-5 RUN #3 MODE 16 XN = 1 640168

0.1462952E-01	0.1445949E-01	0.1412015E-01	0.1378032E-01	0.1344140E-01	0.1310555E-01	0.1277126E-01
0.1243924E-01	0.1210726E-01	0.1178024E-01	0.1145[illegible]E-01	0.1114125E-01	0.1083269E-01	0.1052500E-01
0.1022559E-01	0.9931649E-02	0.9647451E-02	0.9374057E-02	0.9137845E-02	0.8937766E-02	0.8766026E-02
0.8619129E-02	0.8486495E-02	0.8372892E-02	0.8362[illegible]E-02	0.8363050E-02	0.8247605E-02	0.8140010E-02
0.	0.	-0.6382727E-03	0.7087574E-02	0.	0.	0.
0.	-0.1026685E-01	-0.9992309E-02	-0.1028926E-01	-0.1072192E-01	0.	-0.1081586E-01
-0.1088655E-01	-0.1082067E-01	-0.1044745E-01	-0.9349570E-02	-0.7895272E-02	-0.5714017E-02	-0.3219482E-02
-0.5145[illegible]E-03	0.2968949E-02	-0.3305551E-02	0.5835163E-02	0.	0.5976633E-02	0.1338021E-01
0.1908698E-01	0.2224470E-01	0.2280600E-01	0.2086910E-01	0.1671907E-01	0.1071984E-01	0.3517809E-02
0.5552591E-02	0.2238492E-02	0.	0.2122491E-02	-0.7195210E-03	-0.3071973E-02	-0.4632093E-02
-0.5313354E-02	-0.5190359E-02	-0.4345728E-02	-0.2977474E-02	-0.1090524E-02	0.3694653E-02	-0.4078481E-02
0.	-0.4326637E-02	-0.1078056E-01	-0.1583703E-01	-0.1881998E-01	-0.1957273E-01	-0.1825706E-01
-0.1507291E-01	-0.1033451E-01	-0.4597614E-02	-0.5331853E-02	-0.2064324E-02	0.	-0.1951770E-02
0.9[illegible]916E-03	0.3341025E-02	0.5030412E-02	0.5956[illegible]E-02	0.6067555E-02	0.5449033E-02	0.4201977E-02
0.2539736E-02	-0.5247886E-02	0.5528236E-02	-0.	0.5881691E-02	0.1486138E-01	0.2194794E-01
0.2596222E-01	0.2667426E-01	0.2408843E-01	0.1863[illegible]E-01	0.1082297E-01	0.1668698E-02	-0.9903114E-03
-0.2891750E-02	-0.	-0.2950043E-02	-0.4429915E-02	-0.5414627E-02	-0.5677101E-02	-0.5156327E-02
-0.3940[illegible]55E-02	-0.2127399E-02	0.1374604E-[illegible]	0.2667229E-02	0.7156542E-02	0.1743599E-02	-0.
0.1354764E-02	-0.3195171E-02	-0.7351512E-02	-0.1[illegible]47495E-01	-0.1214105E-01	-0.1252667E-01	-0.1160047E-01
-0.9529184E-02	-0.6696261E-[illegible]	0.2022326E-[illegible]	-0.1130989E-02	-0.	-0.1167848E-02	-0.2179957E-02
-0.2825216E-02	-0.2965228E-02	-0.2519642E-02	-0.1377294E-02	-0.1894438E-03	0.1539480E-02	0.3470027E-02
-0.7737463E-02	-0.7589667E-02	-0.7296838E-02	-0.7[illegible]2891E-02	-0.6712895E-02	-0.6419389E-02	-0.6129480E-02
-0.5843527E-02	-0.5555166E-02	-0.5273535E-02	-0.4988653E-02	-0.4712108E-02	-0.4437452E-02	-0.4167827E-02
-0.3895719E-02	-0.3635259E-02	-0.3376212E-02	-0.3118980E-02	-0.2888725E-02	-0.2677720E-02	-0.2482718E-02
-0.2302717E-02	-0.2129957E-02	-0.3073022E-02	-0.2228664E-02	-0.1961738E-02	-0.1800052E-02	-0.1638778E-02
-0.1218943E-02	-0.	0.1435002E-[illegible]	-0.1240855E-02	-0.	-0.	-0.
-0.	0.3126418E-02	0.3552799E-[illegible]	0.3075497E-02	0.3231451E-02	-0.	0.3359989E-02
0.3503746E-[illegible]	0.3672963E-[illegible]	0.3605395E-[illegible]	0.3434205E-02	0.2841816E-02	0.1952454E-02	0.9603194E-03
-0.1923784E-04	-0.9156514E-03	-0.2071453E-01	0.8691438E-01	0.2913793E-15	0.9507999E-01	-0.1741382E-00
0.2337233E-[illegible]	0.2617847E-[illegible]	0.2596131E-[illegible]	0.2304932E-00	0.1782929E-00	0.1128051E-00	0.4638656E-01
-0.5644826E-01	-0.1673167E-[illegible]	0.1657850E-1[illegible]	-0.1551843E-01	0.1662095E-01	0.4272602E-01	0.6155070E-01
0.7321207E-01	0.7648227E-[illegible]	0.6876589E-[illegible]	0.4914037E-[illegible]	0.2552936E-01	-0.3555057E-01	0.7083932E-01
0.2731837E-15	0.7399862E-01	0.1576099E-[illegible]	0.2177690E-00	0.2474824E-00	0.2479011E-00	0.2219671E-00
0.1731923E-[illegible]	0.1089746E-[illegible]	0.4718391E-01	-0.7543138E-01	-0.4515414E-01	0.2207635E-15	-0.4415139E-01
-0.1788549E-01	0.5439319E-02	0.2524322E-[illegible]	0.4128320E-01	0.5144593E-01	0.5204149E-01	0.4775385E-01
0.2394717E-01	-0.8695645E-01	-0.9556602E-[illegible]	-0.6005620E-16	-0.9627026E-01	-0.1090089E-00	-0.1182055E-00
-0.1163115E-00	-0.1006931E-00	-0.7402425E-[illegible]	-0.4301073E-01	-0.1521186E-01	0.7002696E-02	-0.7455347E-01
-0.8034917E-01	-0.2417906E-17	-0.8082264E-[illegible]	-0.8925536E-01	-0.9430263E-01	-0.8998671E-01	-0.7449708E-01
-0.5466609E-01	-0.2488657E-[illegible]	-0.3939471E-02	0.1174136E-01	-0.8608323E-01	-0.9486325E-01	0.1709309E-16
-0.9555044E-01	-0.1081340E-[illegible]	-0.1170444E-[illegible]	-0.1149055E-00	-0.9919870E-01	-0.7264548E-01	-0.4190945E-01
-0.1443562E-01	0.7541594E-02	-0.9611669E-01	-0.1524859E-00	0.4392369E-17	-0.1029694E-00	-0.1116980E-00
-0.1162627E-[illegible]	-0.1101799E-[illegible]	-0.9177676E-[illegible]	-0.6408102E-01	-0.3382670E-01	-0.8281010E-02	0.1092728E-01
0.7722[illegible]75E-04	0.7553639E-04	0.699410[illegible]E-04	0.6994[illegible]E-04	0.1541312E-03	0.2332266E-03	0.3279400E-02
0.3268394E-02	-0.2614676E-[illegible]	-0.2614976E-[illegible]	-0.9[illegible]8702E-03	-0.9108999E-03	0.8610295E-04	0.8241234E-04
0.5404474E-02	0.8814715E-02	-0.3518334E-[illegible]	-0.5947035E-02	0.2597957E-02	0.4205526E-02	-0.4554150E-02
-0.7276248E-02	0.6757242E-04	-0.4742357E-[illegible]	-0.2695594E-04	0.2817453E-03	-0.8955217E-02	-0.6862594E-03
-0.5345641E-02	0.1118862E-[illegible]	-0.4280453E-[illegible]	-0.2148691E-03	-0.4064936E-02	-0.5355351E-02	0.3831787E-04
0.1395469E-03	-0.2280621E-03	-0.1822181E-[illegible]	-0.1234043E-01	-0.9409586E-02	-0.2717967E-02	0.1107567E-03
-0.4199277E-03	-0.1599946E-03	0.4534569E-[illegible]	-0.2737783E-02	0.6989100E-02	0.1399483E-03	-0.1678374E-03
-0.1893908E-03	0.1686297E-01	0.5586157E-[illegible]	0.4[illegible]3289E-02	0.1755345E-04	-0.1894789E-03	0.5670773E-03
0.1583297E-[illegible]	0.2074535E-02	0.187445[illegible]E-[illegible]	-0.1[illegible]683E-[illegible]	-0.7292990E-04	0.4714258E-03	0.8877084E-02
0.8[illegible]247E-[illegible]	0.1669416E-[illegible]	0.383826[illegible]E-[illegible]	-0.1[illegible]557[illegible]E-[illegible]	0.5668657E-03	0.2251646E-02	0.1052010E-01
0.2328878E-02	-0.6882373E-04	-0.8477510E-04	0.4772173E-03			

SA-5 RUN #3 MODE 17 XN = 1.088641

0.1019702E-02	0.9651808E-03	0.8574006E-03	0.7545607E-03	0.6555444E-03	0.5509844E-03	0.4504482E-03
0.3469748E-03	0.2489104E-03	0.1456887E-03	0.5015816E-04	-0.4501319E-04	-0.1510839E-03	-0.2413549E-03
-0.3434535E-03	-0.4321256E-03	-0.5267988E-03	-0.6094773E-03	-0.6940797E-03	-0.7729015E-03	-0.8450612E-03
-0.9125222E-03	-0.9767590E-03	-0.2101406E-02	-0.9399349E-03	-0.1045553E-02	-0.1106258E-02	-0.1164851E-02
0.	0.	0.6835707E-04	-0.1311674E-02	0.	0.	0.
0.	0.6875935E-03	0.7168226E-03	0.7306062E-03	0.7514515E-03	0.	0.7689100E-03
0.7877673E-03	0.8067940E-03	0.8003966E-03	0.7529059E-03	0.6386225E-03	0.4657678E-03	0.2490017E-03
-0.7812437E-03	-0.3775068E-03	0.1387144E-03	-0.4944815E-03	0.	-0.5271841E-03	-0.1047446E-02
-0.1444969E-02	-0.1676829E-02	-0.1713007E-02	-0.1569348E-02	-0.1270514E-02	-0.8328186E-03	-0.3050775E-03
-0.6981772E-03	-0.4156224E-03	0.	-0.3947699E-03	-0.1521911E-03	0.7347164E-04	0.2586247E-03
0.3644023E-03	0.4040965E-03	0.3844832E-03	0.3092268E-03	0.1998863E-03	-0.2233656E-04	0.4819679E-03
0.	0.4820085E-03	0.9030638E-03	0.1213532E-02	0.1393337E-02	0.1416138E-02	0.1305602E-02
0.1077754E-02	0.7469851E-03	0.3566068E-03	0.5863573E-03	0.3052798E-03	0.	0.2999967E-03
0.4034041E-04	-0.1947673E-03	-0.3551184E-03	-0.4589810E-03	-0.4917110E-03	-0.4606969E-03	-0.3637456E-03
-0.2308200E-03	0.4491253E-03	-0.2508305E-02	-0.	-0.2784131E-03	-0.8687283E-03	-0.1335579E-02
-0.1612746E-02	-0.1679773E-02	-0.1526067E-02	-0.1189726E-02	-0.7086608E-03	-0.1458164E-03	-0.1848549E-03
0.4904087E-04	-0.	0.6657194E-04	0.2526852E-03	0.4275709E-03	0.4925302E-03	0.4849221E-03
0.3943007E-03	0.2344482E-03	0.2208367E-04	-0.2276252E-03	-0.5107551E-03	-0.1811868E-03	-0.
-0.1766031E-03	0.1246435E-03	0.3872228E-03	0.6076462E-03	0.7563957E-03	0.8287064E-03	0.8176674E-03
0.7262337E-03	0.5776919E-03	0.2525272E-03	0.2209810E-03	-0.	0.2114718E-03	0.1509690E-03
0.9313361E-04	0.1874076E-04	-0.7919597E-04	-0.1696384E-03	-0.2642676E-03	-0.3463909E-03	-0.4258871E-03
0.1120083E-03	0.1086242E-03	0.1211046E-03	0.1239232E-03	0.1427315E-03	0.1381888E-03	0.1427677E-03
0.1629218E-03	0.1671974E-03	0.1905887E-03	0.1824031E-03	0.1952364E-03	0.2078817E-03	0.2261542E-03
0.2197015E-03	0.2495898E-03	0.2622021E-03	0.2385830E-03	0.2552277E-03	0.2660818E-03	0.2716047E-03
0.2833362E-03	0.2914277E-03	-0.2307299E-03	0.2795997E-03	0.3032411E-03	0.3211543E-03	0.3176331E-03
-0.1867743E-02	-0.	-0.2368202E-04	0.4582365E-03	-0.	-0.	-0.
-0.	0.1390422E-03	-0.5916291E-03	0.4148174E-03	0.3353345E-03	-0.	0.2680896E-03
0.1869669E-03	0.5843518E-04	-0.4369777E-04	-0.1269381E-03	-0.1629280E-03	-0.1362474E-03	-0.6437770E-04
0.4563921E-04	0.1961613E-03	-0.1373331E-00	-0.1528243E-00	0.2926943E-16	-0.1526395E-00	-0.1536387E-00
-0.1364204E-00	-0.1016618E-00	-0.5471825E-01	-0.2610342E-02	0.4750729E-01	0.8794817E-01	0.1119726E-00
-0.1347441E-00	-0.1461876E-00	0.1912549E-16	-0.1458687E-00	-0.1435153E-00	-0.1237775E-00	-0.8786854E-01
-0.4131152E-01	0.8967098E-02	0.5608534E-01	0.9295314E-01	0.1137023E-00	-0.1359454E-00	-0.1514914E-00
0.1228088E-16	-0.1513169E-00	-0.1523963E-00	-0.1353176E-00	-0.1007509E-00	-0.5405066E-01	-0.2181748E-02
0.4775269E-01	0.8792174E-01	0.1117463E-00	-0.1338060E-00	-0.1446239E-00	-0.6439425E-17	-0.1442856E-00
-0.1414656E-00	-0.1214557E-00	-0.8552886E-01	-0.3918986E-01	0.1066209E-01	0.5724596E-01	0.9353036E-01
0.1137623E-00	-0.1235295E-00	-0.1129955E-00	0.8184518E-18	-0.1116785E-00	-0.8733872E-01	-0.5096313E-01
-0.8178858E-02	0.3462841E-01	0.7175411E-01	0.9902216E-01	0.1138288E-00	0.1164017E-00	-0.1243711E-00
-0.1143454E-00	-0.1924395E-17	-0.1130828E-00	-0.8946670E-01	-0.5363422E-01	-0.1101975E-01	0.3202501E-01
0.6967211E-01	0.9760822E-01	0.1130679E-00	0.1162076E-00	-0.1229558E-00	-0.1123841E-00	0.3047132E-18
-0.1110792E-00	-0.8671845E-01	-0.5034744E-01	-0.7627769E-02	0.3508783E-01	0.7208828E-01	0.9923205E-01
0.1139086E-00	0.1163654E-00	-0.1227169E-00	-0.1124672E-00	0.8093965E-18	-0.1112002E-00	-0.8733353E-01
-0.5133602E-01	-0.8723009E-02	0.3412724E-01	0.7139881E-01	0.9881354E-01	0.1136654E-00	0.1161934E-00
0.2438932E-04	0.2451280E-04	0.2492629E-04	0.2492629E-04	-0.7348242E-04	-0.1039271E-03	-0.2526791E-03
-0.2512984E-03	0.3179576E-03	0.3179656E-03	0.2048999E-03	0.2048024E-03	-0.8629380E-04	-0.8524474E-04
-0.5083677E-03	-0.7771320E-03	0.3368306E-03	0.5555691E-03	-0.9915260E-04	-0.2366469E-03	0.4090396E-03
0.6435223E-03	-0.1655172E-04	0.1122986E-02	0.3052646E-05	0.1245428E-02	-0.1789740E-05	-0.8640895E-01
0.1011945E-00	0.1315645E-02	0.2055618E-03	0.1418691E-03	-0.3295775E-03	-0.8573893E-01	0.1007311E-00
0.1313589E-02	0.1882887E-03	0.1382971E-03	0.3599486E-03	-0.8535930E-01	0.1006845E-00	0.1315744E-02
0.2034656E-03	0.1348937E-03	-0.9193815E-03	-0.8623528E-01	0.9965634E-01	0.1313369E-02	0.1813268E-03
0.1410849E-03	0.2154028E-03	0.5555721E-01	-0.1204382E-02	-0.1648418E-04	0.6957547E-04	0.1395777E-02
0.1921862E-02	0.5591153E-01	-0.9764585E-03	-0.2153777E-05	0.5750982E-04	0.1404696E-02	0.1193473E-02
0.5507156E-01	-0.9625603E-03	-0.1850882E-04	0.6363491E-04	0.1395161E-02	0.1421396E-02	0.5488673E-01
-0.1060149E-02	-0.7582727E-05	0.5997678E-04	0.1403518E-02			

SA-5 RUN #3 MODE 18 XN = 9732374

0.2523127E-02	0.2437056E-02	0.2270769E-02	0.2102879E-02	0.1934719E-02	0.1770866E-02	0.1608158E-02
0.1448602E-02	0.1284625E-02	0.1130006E-02	0.9762727E-03	0.8284155E-03	0.6906158E-03	0.5483494E-03
0.4161387E-03	0.2865129E-03	0.1662626E-03	0.5351159E-04	-0.3316658E-04	-0.8881004E-04	-0.1247113E-03
-0.1421602E-03	-0.1492154E-03	-0.1786661E-02	-0.1452766E-03	-0.1474295E-03	-0.1443531E-03	-0.1356977E-03
0.	0.	0.8704536E-04	-0.7535423E-03	0.	0.	0.
0.	0.9861789E-03	0.1410849E-02	0.6551165E-03	0.3894273E-03	0.	0.2017834E-03
-0.3153474E-04	-0.4187780E-03	-0.7451783E-02	-0.1363369E-02	-0.1175937E-02	-0.1109517E-02	-0.8802129E-03
-0.5053459E-03	0.5984445E-06	0.1394540E-02	0.6388610E-02	0.	0.6516137E-02	0.9927183E-02
0.1136119E-01	0.1032181E-01	0.7117637E-02	0.2162036E-02	-0.3919176E-02	-0.1059055E-01	-0.1744993E-01
-0.1519656E-02	-0.6151801E-02	0.	-0.6268719E-02	-0.9405720E-02	-0.1067692E-01	-0.9703602E-02
-0.6616365E-02	-0.1959919E-02	0.3779869E-02	0.1047861E-01	0.1663425E-01	0.4818115E-04	0.4943535E-02
0.	0.5074668E-02	0.8484720E-02	0.1405961E-01	0.9296720E-02	0.6426687E-02	0.1874304E-02
-0.3776233E-02	-0.9991349E-02	-0.1637923E-01	0.2274745E-03	-0.4704960E-02	0.	-0.4827660E-02
-0.8197904E-02	-0.9637782E-02	-0.8744889E-02	-0.5676917E-02	-0.9657519E-03	0.4867211E-02	0.1129542E-01
0.1792116E-01	0.2232157E-02	0.1483302E-02	-0.	0.1456761E-02	0.7664260E-03	0.1480085E-03
-0.3174628E-03	-0.5281064E-03	-0.5776489E-03	-0.5025608E-03	-0.3950303E-03	-0.3023503E-03	-0.1961602E-03
0.9523569E-04	-0.	0.9416940E-04	0.2565094E-03	0.2729520E-03	0.1355836E-03	-0.5354157E-06
-0.1676799E-03	-0.3037870E-03	-0.4581645E-03	-0.6769165E-03	-0.2190943E-02	-0.1657751E-02	-0.
-0.1628345E-02	-0.1055456E-02	-0.4243510E-02	-0.1056092E-03	0.5978975E-03	0.8299274E-03	0.7880624E-03
0.4428753E-03	-0.1282097E-03	0.3756277E-04	0.9561563E-04	-0.	0.9894680E-04	0.1118218E-03
0.7106153E-04	-0.2329478E-05	0.3381000E-05	0.7982090E-04	0.2571730E-03	0.4639904E-03	0.6358315E-03
0.1394199E-01	0.1349815E-01	0.1267092E-01	0.1171069E-01	0.1081488E-01	0.9935914E-02	0.9056200E-02
0.8171317E-02	0.7298668E-02	0.6421400E-02	0.5568338E-02	0.4717174E-02	0.3872939E-02	0.3032369E-02
0.2215617E-02	0.1389359E-02	0.5861710E-03	-0.1770468E-03	-0.9083020E-03	-0.1582042E-02	-0.2209877E-02
-0.2804485E-02	-0.3376259E-02	-0.1279568E-01	-0.3042646E-02	-0.3938068E-02	-0.4492162E-02	-0.5023226E-02
0.1569738E-03	-0.	0.3115286E-02	-0.6199599E-02	-0.	-0.	-0.
-0.	0.2665272E-02	-0.4673619E-02	0.4132041E-02	0.3898927E-02	-0.	0.3732372E-02
0.3534866E-02	0.3205795E-02	0.2871802E-02	0.2418217E-02	0.1798105E-02	0.1098750E-02	0.3622390E-03
-0.3870351E-03	-0.1264445E-02	0.6467497E-03	0.8354104E-02	-0.3670536E-14	0.8552716E-02	0.1400053E-01
0.1612594E-01	0.1391636E-01	0.9457989E-02	0.6124575E-02	0.4237283E-02	-0.1565321E-02	-0.1324769E-01
-0.1970353E-02	0.4707151E-03	-0.7643990E-10	0.5593056E-03	0.2389845E-02	0.2689844E-02	0.5703171E-03
-0.2390581E-02	-0.3136906E-02	-0.1672099E-02	-0.3988222E-02	-0.1304647E-01	0.2381875E-03	0.6962485E-02
-0.1149315E-14	0.7132773E-02	0.1176614E-01	0.1626138E-01	0.1074465E-01	0.6271963E-02	0.3254040E-02
0.2386164E-02	-0.2687870E-02	-0.1267216E-01	0.1122251E-02	0.9339642E-02	0.1551187E-14	0.9563773E-02
0.1565164E-01	0.1844048E-01	0.1663738E-01	0.1210558E-01	0.8329567E-02	0.5917063E-02	-0.3918646E-03
-0.1277354E-01	-0.1813792E-01	-0.5431261E-01	0.4586380E-15	-0.5730436E-01	-0.1145111E-00	-0.1766122E-00
-0.2246566E-00	-0.2456066E-00	-0.2326800E-00	-0.1582154E-00	-0.1256877E-00	-0.6216034E-01	-0.1333287E-01
0.5160133E-01	-0.1165100E-14	0.5458359E-01	0.1123816E-00	0.1717477E-00	0.2132240E-00	0.2270574E-00
0.2119851E-01	0.1712223E-00	0.1088350E-00	0.3533867E-01	-0.1720612E-01	-0.5155576E-01	0.1584704E-14
-0.5444999E-01	-0.1096990E-00	-0.1740028E-00	-0.2168340E-00	-0.2374756E-00	-0.2251240E-00	-0.1820182E-00
-0.1212749E-00	-0.5946714E-01	0.1065883E-01	0.4868354E-01	-0.3290365E-16	0.5163362E-01	0.1088132E-00
0.1674808E-00	0.2084428E-00	0.2221461E-00	0.2274057E-00	0.1674651E-00	0.1063672E-00	0.3452730E-01
-0.4548772E-04	-0.4725109E-04	-0.4321630E-04	-0.4321629E-04	0.1764325E-03	0.8809235E-04	0.3413931E-01
0.3397358E-01	-0.3460307E-01	-0.3443109E-01	0.3563682E-01	0.3345133E-01	-0.3342308E-01	-0.3321732E-01
0.2789110E-03	0.2105973E-03	-0.7192487E-03	-0.5978574E-03	-0.4767388E-03	-0.5723335E-03	0.8795686E-03
0.8452240E-03	0.1781000E-05	-0.6345523E-05	-0.3323177E-05	-0.8456710E-04	0.3133283E-01	0.1381772E-01
0.1366773E-02	-0.3046346E-03	0.9560950E-03	-0.6457503E-03	-0.2943217E-01	-0.7455112E-02	-0.1409540E-01
-0.1952765E-03	-0.1807293E-03	0.4697702E-03	0.3157162E-01	0.1339932E-01	0.4654823E-02	-0.3035098E-03
0.2453844E-04	-0.6338067E-03	-0.2909502E-01	-0.4689685E-02	-0.1353985E-01	-0.1949804E-03	-0.1794172E-03
0.4677999E-03	0.1354165E-01	-0.1036272E-02	-0.3625174E-03	-0.4491570E-03	0.1954855E-03	-0.2875759E-03
-0.1460469E-02	-0.2270252E-02	-0.8094571E-04	0.4285194E-03	-0.2043324E-03	0.2098822E-03	0.1285553E-01
-0.7214446E-02	-0.8372988E-03	-0.4275221E-03	0.2537325E-03	-0.2862599E-03	-0.1106588E-01	-0.1915621E-02
0.6612359E-03	0.4343123E-03	-0.2244058E-03	0.2243667E-03			

SA-5 RUN #3 MODE 19 XN = .6351186

0.1205636E-01	0.1184397E-01	0.1145190E-01	0.1112601E-01	0.1077877E-01	0.1046376E-01	0.1012033E-01
0.9724642E-02	0.9370201E-02	0.9005075E-02	0.8626190E-02	0.8325781E-02	0.7952355E-02	0.7558531E-02
0.7206105E-02	0.6849007E-02	0.6467575E-02	0.6139637E-02	0.5747809E-02	0.5405390E-02	0.5059452E-02
0.4696521E-02	0.4351540E-02	0.1858430E-01	0.4555270E-02	0.4021082E-02	0.3675147E-02	0.3335737E-02
-0.	-0.	-0.3579694E-03	0.2927314E-02	-0.	-0.	-0.
-0.	-0.1756713E-01	-0.1607860E-01	-0.1867174E-01	-0.1904842E-01	-0.	-0.1935595E-01
-0.1964747E-01	-0.1967249E-01	-0.1883476E-01	-0.1663808E-01	-0.1286201E-01	-0.8855133E-02	-0.5960732E-02
-0.5262966E-02	-0.1093846E-01	-0.2658686E-02	-0.2718819E-02	-0.	-0.2741953E-02	-0.2697658E-02
-0.2550287E-02	-0.1807028E-02	-0.1767369E-02	-0.1401387E-02	-0.1404367E-02	-0.1692339E-02	-0.1965802E-02
0.3036215E-01	0.2205830E-01	-0.	0.2169039E-01	0.1333463E-01	0.4739606E-02	-0.1712123E-02
-0.7287576E-02	-0.9177586E-02	-0.8265372E-02	-0.4956948E-02	-0.2240232E-03	0.2401853E-02	0.1151022E-02
-0.	0.1081933E-02	-0.1446484E-04	-0.8233044E-03	-0.9719659E-03	-0.4795318E-03	0.2881732E-03
0.9680005E-03	0.1268059E-02	0.1341988E-02	-0.2965251E-01	-0.2110167E-01	-0.	-0.2085761E-01
-0.1257677E-01	-0.4259880E-02	0.2147895E-02	0.7123768E-02	0.8924594E-02	0.7647699E-02	0.3325692E-02
-0.3156385E-02	-0.2117050E-01	-0.1266468E-01	0.	-0.1236428E-01	-0.4664940E-02	0.2027553E-02
0.6312460E-02	0.7941317E-02	0.6826983E-02	0.3646244E-02	-0.5810192E-03	-0.5106975E-02	0.1961938E-01
0.1106751E-01	0.	0.1071518E-01	0.3181536E-02	-0.2943396E-02	-0.6086575E-02	-0.8277122E-02
-0.7489445E-02	-0.4776179E-02	-0.6004530E-04	0.6319198E-02	0.2456184E-01	0.1750408E-01	0.
0.1719979E-01	0.9817404E-02	0.2084946E-02	-0.4226554E-02	-0.9227530E-02	-0.1078255E-01	-0.8827384E-02
-0.3385152E-02	0.4493216E-02	-0.2058257E-01	-0.1481872E-01	0.	-0.1453769E-01	-0.8216966E-02
-0.1314889E-02	0.4291740E-02	0.8656840E-02	0.9776766E-02	0.7740800E-02	0.3317998E-02	-0.2226725E-02
-0.1448967E-00	-0.1404071E-00	-0.1312961E-00	-0.1222722E-00	-0.1132729E-00	-0.1042993E-00	-0.9541308E-01
-0.8666186E-01	-0.7781042E-01	-0.6919381E-01	-0.6074889E-01	-0.5246572E-01	-0.4422549E-01	-0.3628950E-01
-0.2835770E-01	-0.2068585E-01	-0.1321708E-01	-0.6251366E-02	-0.1005987E-03	0.5104917E-02	0.9433204E-02
0.1314236E-01	0.1650765E-01	-0.8076132E-02	0.1453342E-01	0.1973991E-01	0.2266150E-01	0.2537088E-01
0.1028268E-04	0.	-0.1195179E-02	0.2963390E-01	0.	0.	0.
0.	0.6551991E-01	0.3794212E-01	0.1009920E-00	0.1200372E-00	0.	0.1365724E-00
0.1565145E-00	0.1859643E-00	0.2034111E-00	0.2053547E-00	0.1810919E-00	0.1360171E-00	0.8532905E-01
0.3962377E-01	0.2550389E-01	0.2497418E-01	-0.3021132E-01	-0.3004822E-14	-0.3169142E-01	-0.7133115E-01
-0.8770402E-01	-0.7329356E-01	-0.4574926E-01	-0.2945255E-01	-0.2825627E-01	-0.3709300E-02	0.5755014E-01
0.3045554E-01	0.3991718E-01	-0.4830821E-14	0.3994066E-01	0.4309466E-01	0.4449705E-01	0.4915993E-01
0.4886357E-01	0.2584391E-01	-0.1334125E-01	-0.1704947E-01	0.4218645E-01	0.4610157E-02	0.3570296E-01
-0.3996627E-14	0.3651029E-01	0.5831278E-01	0.7365100E-01	0.8247390E-01	0.7692940E-01	0.4160019E-01
-0.1101258E-01	-0.2384493E-01	0.3381324E-01	0.5345843E-02	-0.2289233E-01	-0.6479831E-14	-0.2371966E-01
-0.4535393E-01	-0.5369725E-01	-0.4168900E-01	-0.2264673E-01	-0.1928789E-01	-0.3240778E-01	-0.1830029E-01
0.4352816E-01	0.2977642E-01	-0.2172080E-01	0.3867737E-15	-0.2535225E-01	-0.9875629E-01	-0.1647161E-00
-0.1967842E-00	-0.1954421E-00	-0.1755581E-00	-0.1458846E-00	-0.8529242E-01	0.9604164E-02	0.3714093E-01
-0.6401482E-04	-0.4317451E-14	-0.2724484E-02	-0.5519020E-01	-0.1021082E-00	-0.1242075E-00	-0.1230172E-00
-0.1141448E-00	-0.1034549E-00	-0.6381731E-01	0.1714733E-01	0.6252039E-02	0.2985339E-01	-0.4357472E-14
0.3247188E-01	0.8013083E-01	0.1402085E-00	0.1940574E-00	0.2208572E-00	0.1979401E-00	0.1315966E-00
0.7224432E-01	0.6154336E-01	0.4822233E-03	0.1357183E-01	0.7307810E-15	0.1509899E-01	0.4178135E-01
0.7838433E-01	0.1160566E-00	0.1389427E-00	0.1256535E-00	0.7792489E-01	0.3999772E-01	0.4739027E-01
0.1241298E-02	0.1223085E-02	0.1163527E-02	0.1163520E-02	-0.1737742E-02	-0.7251520E-03	0.2015583E-02
0.2022874E-02	0.3303039E-01	0.3273696E-01	-0.3162528E-02	-0.3184013E-02	-0.3056851E-01	-0.3041170E-01
-0.8094709E-02	-0.1065247E-01	0.9383647E-02	0.1029053E-01	0.8763583E-02	0.1171984E-01	-0.9473505E-02
-0.1089996E-01	-0.1119454E-03	0.1568578E-03	0.8027134E-04	-0.7767596E-05	-0.2286571E-01	-0.4531482E-02
0.1109936E-01	0.1177264E-02	0.7453705E-02	0.8923142E-03	0.1566889E-01	0.2819541E-01	0.5819157E-02
0.1198699E-02	0.6325941E-03	0.4782497E-04	-0.1086675E-02	0.3376075E-01	-0.3357096E-01	0.1234523E-02
0.2785244E-03	0.3801505E-03	-0.3539658E-01	0.2594781E-02	-0.2538711E-01	0.1218368E-02	0.3943784E-03
0.1147946E-02	-0.1076895E-01	0.3115157E-01	0.2945764E-02	-0.5946906E-03	0.1320931E-03	-0.4543814E-03
0.3657762E-01	0.2611393E-01	-0.2717007E-02	-0.4324602E-04	-0.3877319E-04	-0.5174305E-03	0.9533547E-02
-0.5634797E-02	0.1302337E-02	0.6903168E-03	-0.1451344E-03	-0.4832735E-03	-0.3866903E-01	-0.3350122E-02
0.6822851E-02	0.2675943E-04	0.7299405E-04	-0.5373833E-03			

SA-5 RUN #3 MODE 20 XN = 3035814

0.8615297E-02	0.8457715E-02	0.8140664E-02	0.7813287E-02	0.7481658E-02	0.7164038E-02	0.6844857E-02
0.6536722E-02	0.6229107E-02	0.5919357E-02	0.5612464E-02	0.5316214E-02	0.5045950E-02	0.4753877E-02
0.4486931E-02	0.4215336E-02	0.3963825E-02	0.3723827E-02	0.3499683E-02	0.3331019E-02	0.3186222E-02
0.3065240E-02	0.2955429E-02	0.4717200E-02	0.3318541E-02	0.2863824E-02	0.2766196E-02	0.2673047E-02
-0.	-0.	-0.1984419E-02	0.2597555E-02	-0.	-0.	-0.
-0.	-0.3048274E-02	-0.2746904E-02	-0.5437227E-02	-0.3640571E-02	-0.	-0.3796523E-02
-0.3953940E-02	-0.4095748E-02	-0.4043259E-02	-0.3731955E-02	-0.3065889E-02	-0.2160931E-02	-0.1127110E-02
-0.2419229E-04	0.1447318E-02	-0.9419161E-04	0.3149385E-02	-0.	0.3284378E-02	0.6026163E-02
0.8245578E-02	0.9527884E-02	0.9995761E-02	0.9364904E-02	0.7754636E-02	0.5195082E-02	0.1937916E-02
0.3637404E-02	0.2900949E-02	-0.	0.2832776E-02	0.1866735E-02	0.6975088E-03	-0.5189837E-03
-0.1308829E-02	-0.1839476E-02	-0.1996736E-02	-0.1793737E-02	-0.1342736E-02	-0.4483198E-03	-0.3771334E-02
-0.	-0.3833525E-02	-0.6397655E-02	-0.8499364E-02	-0.8862234E-02	-0.8488007E-02	-0.7422312E-02
-0.5781639E-02	-0.3764716E-02	-0.1595755E-02	-0.2697274E-02	-0.1979743E-02	-0.	-0.1935098E-02
-0.8197241E-03	0.4451544E-03	0.1454185E-02	0.2336681E-02	0.2591457E-02	0.2377257E-02	0.1675317E-02
0.8481303E-03	-0.1174966E-02	0.2124617E-02	0.	0.2237144E-02	0.4902856E-02	0.6864002E-02
0.7711307E-02	0.7704935E-02	0.6704535E-02	0.5114442E-02	0.3244373E-02	0.1354751E-02	0.1521624E-02
0.1146101E-02	0.	0.1097242E-02	0.5479985E-03	-0.3567499E-03	-0.1251707E-02	-0.1828709E-02
-0.2139894E-02	-0.1986616E-02	-0.1344144E-02	-0.3149933E-03	0.1844039E-02	0.4278925E-03	0.
0.3895714E-03	-0.9240538E-03	-0.2177923E-02	-0.3402870E-02	-0.4219810E-02	-0.4683183E-02	-0.4494294E-02
-0.3507217E-02	-0.1843033E-02	-0.1023201E-02	-0.6870381E-03	0.	-0.6499808E-03	-0.1651079E-03
0.3555274E-03	0.7253744E-03	0.1179729E-02	0.1172402E-02	0.1089720E-02	0.9207378E-03	0.7632803E-03
-0.2933546E-02	-0.2855724E-02	-0.2742976E-02	-0.2617547E-02	-0.2507714E-02	-0.2363495E-02	-0.2240103E-02
-0.2146966E-02	-0.2027607E-02	-0.1945955E-02	-0.1807127E-02	-0.1704668E-02	-0.1613627E-02	-0.1530368E-02
-0.1404822E-02	-0.1355840E-02	-0.1275833E-02	-0.1122215E-02	-0.1073128E-02	-0.1027150E-02	-0.9779097E-03
-0.9517727E-03	-0.9258951E-03	-0.4656349E-02	-0.9250723E-03	-0.9118393E-03	-0.9099205E-03	-0.8643322E-03
0.9424527E-02	0.	0.7781752E-04	-0.9258999E-03	0.	0.	0.
0.	-0.2356351E-02	0.2536727E-02	-0.4558815E-02	-0.4303304E-02	0.	-0.4062319E-02
-0.3714375E-02	-0.2961136E-02	-0.2091053E-02	-0.1444[illegible]E-02	-0.8937939E-04	0.3750979E-03	0.3753981E-03
-0.9452779E-04	-0.8370980E-03	0.1113668E-[illegible]	-0.4914356E-02	0.2971788E-14	-0.8426444E-02	-0.9645711E-01
-0.1568868E-00	-0.1103365E-00	-0.2899827E-01	0.7064781E-01	0.1401356E-00	0.1399039E-00	0.8427886E-01
0.1483601E-00	-0.9954602E-02	0.1699646E-14	-0.1364263E-01	-0.1053729E-00	-0.1507695E-00	-0.1285186E-00
-0.4869210E-01	0.5310414E-01	0.1277163E-00	0.1334692E-00	0.8253548E-01	0.1055947E-00	-0.1230094E-01
0.2693977E-14	-0.1581732E-01	-0.1047442E-00	-0.1452313E-00	-0.1179573E-00	-0.3519253E-01	0.6628141E-01
0.1377315E-00	0.1392995E-00	0.8501542E-01	0.1052493E-00	-0.1680680E-01	0.1995221E-14	-0.2062174E-01
-0.1154472E-00	-0.1629473E-00	-0.1412585E-00	-0.6037874E-01	0.4375078E-01	0.1214753E-00	0.1304596E-00
0.8212591E-01	0.1595341E-00	0.1081495E-00	-0.6023068E-15	0.1027584E-00	0.5542393E-02	-0.9968734E-01
-0.1644565E-00	-0.1641867E-00	-0.1069418E-00	-0.2807113E-01	0.2944732E-01	0.5147135E-01	0.1610570E-00
0.1757828E-00	-0.3832226E-16	0.1019855E-00	0.1019968E-02	-0.1088014E-00	-0.1771227E-00	-0.1779594E-00
-0.1189243E-00	-0.3623149E-01	0.2528813E-01	0.5004441E-01	0.1567707E-00	0.1049688E-00	0.1717316E-15
0.9955431E-01	0.1875327E-00	-0.1034744E-00	-0.1679246E-00	-0.1670048E-00	-0.1089741E-00	-0.2930061E-01
0.2893923E-01	0.5156636E-1[illegible]	0.1545326E-[illegible]	0.9968550E-01	0.3849096E-16	0.9403444E-01	-0.8409671E-02
-0.1191997E-[illegible]	-0.1876128E-[illegible]	-0.1874921E-[illegible]	-0.1266255E-00	-0.4147656E-01	0.2274371E-01	0.5000632E-01
0.7607669E-03	0.7390660E-03	0.6674356E-03	0.6674356E-03	-0.1100213E-03	0.1442780E-04	-0.2684882E-03
-0.2735430E-03	-0.9548563E-05	-0.5021172E-04	-0.1891972E-02	-0.1885987E-02	0.1633546E-02	0.1585616E-02
0.9912392E-03	0.1771112E-02	-0.7190267E-02	-0.1115222E-02	0.5744817E-04	-0.1881225E-03	-0.6767176E-03
-0.1266763E-02	-0.1275714E-03	-0.5129826E-03	-0.1174116E-04	0.1371142E-02	-0.2409445E-02	-0.2492892E-01
0.8681187E-02	0.6727791E-03	-0.1124919E-02	-0.1479943E-02	-0.1275577E-02	-0.2749383E-01	0.1005992E-01
0.6741866E-03	-0.1085237E-02	-0.1094981E-02	-0.3724[illegible]E-02	-0.2921736E-01	0.1115345E-01	0.6724196E-03
-0.1109923E-02	-0.1053263E-02	0.1109925E-03	-0.2525[illegible]E-01	0.1434283E-01	0.6750895E-03	-0.1055748E-02
-0.1108849E-02	0.2713064E-01	0.4386701E-01	0.7389[illegible]E-02	-0.6109381E-04	-0.5217819E-03	0.3754859E-02
0.2306837E-01	0.4236928E-01	0.6208675E-02	-0.1217226E-03	-0.4737430E-03	0.3706265E-02	0.2337667E-01
0.4606508E-01	0.6075969E-02	-0.5437[illegible]E-[illegible]	-0.4982196E-03	0.3766207E-02	0.2537807E-01	0.4652149E-01
0.6607406E-02	-0.9702395E-04	-0.4881634E-[illegible]	0.3721[illegible]E-02			

SA-5 RUN #3 MODE 21 XN = 3017368

0.2345542E-02	0.2271116E-02	0.2123323E-02	0.1977626E-02	0.1834435E-02	0.1691050E-02	0.1551124E-02
0.1411294E-02	0.1274908E-02	0.1138778E-02	0.1009[illegible]2E-02	0.8850623E-03	0.7598479E-03	0.6433322E-03
0.5274703E-03	0.4187536E-03	0.3150685E-03	0.2240343E-03	0.1551310E-03	0.1114509E-03	0.8777478E-04
0.8265556E-04	0.8727504E-04	0.3275951E-03	0.8559361E-04	0.9471257E-04	0.1138185E-03	0.1325084E-03
-0.	-0.	-0.1329805E-04	0.1770856E-03	-0.	-0.	-0.
-0.	0.1007871E-03	0.1809091E-03	0.9199944E-05	-0.3538480E-04	-0.	-0.7973585E-04
-0.1411603E-03	-0.2529062E-03	-0.3453692E-03	-0.4033561E-03	-0.3682288E-03	-0.2134782E-03	0.4040377E-04
0.3852396E-03	0.9561229E-03	0.5950767E-03	0.5047801E-03	-0.	0.4919693E-03	0.3284795E-03
0.9502449E-04	-0.1291316E-03	-0.3277937E-03	-0.4170513E-03	-0.4055644E-03	-0.2842934E-03	-0.7178339E-04
0.2236333E-02	0.2016673E-02	-0.	0.1995939E-02	0.1517078E-02	0.7739109E-03	-0.1081015E-04
-0.7012995E-03	-0.1033861E-02	-0.9645902E-03	-0.5123635E-03	0.1889977E-03	-0.9196277E-03	-0.4555291E-03
-0.	-0.4447738E-03	-0.3388595E-04	0.2845424E-03	0.4546058E-03	0.4353467E-03	0.2446815E-03
-0.1102[illegible]60E-03	-0.5471548E-03	-0.1022773E-02	-0.1930533E-02	-0.2247800E-02	-0.	-0.2233081E-02
-0.2107726E-02	-0.1478401E-02	-0.4941985E-03	0.5615089E-03	0.1363457E-02	0.1692455E-02	0.1450428E-02
0.7479636E-03	-0.6216135E-05	-0.1716487E-03	0.	-0.1767172E-03	-0.2837096E-03	-0.3279081E-03
-0.2975525E-03	-0.2059460E-03	-0.5056411E-04	0.1597081E-03	0.4270306E-03	0.7304532E-03	0.2225966E-02
0.2006311E-02	0.	0.1987425E-02	0.1539710E-02	0.8532983E-03	0.6539749E-04	-0.7110457E-03
-0.1216571E-02	-0.1347979E-02	-0.1038119E-02	-0.3758078E-03	-0.5545021E-03	-0.3402737E-03	0.
-0.3348355E-03	-0.1344682E-03	0.4394916E-04	0.1984562E-03	0.2476036E-03	0.2559188E-03	0.2280498E-03
0.2026872E-03	0.1957070E-03	-0.1484853E-02	-0.1134203E-02	0.	-0.1115245E-02	-0.6608924E-03
-0.1124950E-03	0.3747084E-03	0.6717929E-03	0.6601735E-03	0.3298254E-03	-0.2230109E-03	-0.8652098E-03
-0.1616153E-02	-0.1561344E-02	-0.1445839E-02	-0.1334096E-02	-0.1217231E-02	-0.1111302E-02	-0.1002350E-02
-0.8891377E-03	-0.7827719E-03	-0.6712490E-03	-0.5740626E-03	-0.4723024E-03	-0.3726678E-03	-0.2737752E-03
-0.1863099E-03	-0.8938753E-04	-0.1935035E-05	0.6567602E-04	0.1318588E-03	0.1796401E-03	0.2122877E-03
0.2366524E-03	0.2523869E-03	0.5378427E-02	0.2404284E-03	0.2668747E-03	0.2790035E-03	0.2809044E-03
0.1064161E-02	0.	-0.2838695E-04	0.2202846E-03	0.	0.	0.
0.	-0.1873679E-02	0.2110758E-03	-0.3264576E-02	-0.2699262E-02	0.	-0.2215646E-02
-0.1622447E-02	-0.6461291E-03	0.1883265E-03	0.9583192E-03	0.1450848E-02	0.1497396E-02	0.1249568E-02
0.7850817E-03	0.5587673E-03	0.7694860E-01	-0.2941363E-01	-0.3755277E-15	-0.3200061E-01	-0.1038380E-00
-0.1314785E-00	-0.1080412E-00	-0.4757667E-01	0.2641476E-01	0.9054444E-01	0.1268671E-00	0.1263786E-00
0.7321595E-01	-0.3341501E-01	-0.1635456E-15	-0.3599161E-01	-0.1067695E-00	-0.1317511E-00	-0.1045206E-00
-0.4022930E-01	0.3602244E-01	0.9978658E-01	0.1330617E-00	0.1283633E-00	0.7628624E-01	-0.2895565E-01
0.5482115E-17	-0.3149785E-01	-0.1025022E-00	-0.1297344E-00	-0.1064642E-00	-0.4649811E-01	0.2683861E-01
0.9036671E-01	0.1263506E-00	0.1259206E-00	0.7620012E-01	-0.3244098E-01	0.2251444E-15	-0.3499322E-01
-0.1075931E-00	-0.1339474E-00	-0.1074271E-00	-0.4316341E-01	0.3369348E-01	0.9850908E-01	0.1329404E-00
0.1292373E-00	0.1233551E-00	0.7387734E-01	0.3192789E-16	0.6949662E-01	-0.1387398E-01	-0.1030306E-00
-0.1642279E-00	-0.1787969E-00	-0.1448103E-00	-0.7499040E-01	0.8340025E-02	0.7789167E-01	0.1223175E-00
0.7404323E-01	-0.4379836E-15	0.6974275E-01	-0.1110178E-01	-0.9724986E-01	-0.1559008E-00	-0.1687810E-00
-0.1345028E-00	-0.6606836E-01	0.1417309E-01	0.7977113E-01	0.1197399E-00	0.7109260E-01	0.1516499E-15
0.6673160E-01	-0.1527137E-01	-0.1027782E-00	-0.1626784E-00	-0.1764189E-00	-0.1424554E-00	-0.7329274E-01
0.8942797E-02	0.7740289E-01	0.1222527E-00	0.7446188E-01	0.3735009E-16	0.7014953E-01	-0.1036732E-01
-0.9638676E-01	-0.1551401E-00	-0.1681715E-00	-0.1340928E-00	-0.6578724E-01	0.1448872E-01	0.8034439E-01
0.3820001E-03	0.3742408E-03	0.3486793E-03	0.3486793E-03	0.2349560E-03	0.3777899E-03	0.1500387E-02
0.1479197E-02	-0.7658816E-03	-0.7585422E-03	0.3620847E-03	0.3512158E-03	-0.1050984E-02	-0.1041074E-02
-0.3011481E-03	-0.4930988E-03	0.8081136E-03	0.1169930E-02	-0.5661702E-03	-0.1095612E-02	0.3152336E-03
0.4281062E-03	0.1650323E-03	0.1284354E-05	-0.4984465E-05	0.1501285E-02	-0.2057128E-01	-0.1034712E-00
0.1370229E-00	0.1783033E-02	0.6520476E-03	0.5816316E-03	-0.2389380E-01	-0.1048165E-00	0.1334092E-00
0.1782479E-02	0.6017704E-03	0.6182654E-03	-0.2124[illegible]6E-01	-0.1058475E-00	0.1359725E-00	0.1782488E-02
0.6462492E-03	0.5929585E-03	-0.2361544E-01	-0.1[illegible]587[illegible]E-00	0.1361[illegible]9E-00	0.1782543E-02	0.6187499E-03
0.6275584E-03	0.2036638E-01	0.7571995E-01	0.6324[illegible]2E-02	-0.2105310E-03	-0.2962921E-03	0.2650026E-02
0.2041458E-01	0.7453809E-01	0.6171129E-02	-0.1571167E-03	-0.3158636E-03	0.2673711E-02	0.1785527E-01
0.7460734E-01	0.5909158E-02	-0.1994816E-03	-0.2854[illegible]6E-03	0.2642368E-02	0.1913388E-01	0.7697843E-01
0.6272521E-02	-0.1519893E-03	-0.3158823E-03	0.2689[illegible]E-02			

SA-5 RUN #3 MODE 22 XN = 2987183

0.1661412E-02	0.1653400E-02	0.1641212E-02	0.1642599E-02	0.1651795E-02	0.1643425E-02	0.1640600E-02	
0.1625383E-02	0.1623064E-02	0.1602396E-02	0.1598432E-02	0.1586076E-02	0.1537847E-02	0.1529063E-02	
0.1491011E-02	0.1466791E-02	0.1424610E-02	0.1408812E-02	0.1350337E-02	0.1281452E-02	0.1209513E-02	
0.1131460E-02	0.1052262E-02	0.1993176E-03	0.1097835E-02	0.9560278E-03	0.8770182E-03	0.8003034E-03	
0.	0.	-0.7984537E-04	0.6264245E-03	0.	0.	0.	
0.	-0.1600560E-02	-0.1710495E-02	-0.1340527E-02	-0.1506713E-02	0.	-0.1477197E-02	
-0.1439460E-02	-0.1369902E-02	-0.1293694E-02	-0.1185513E-02	-0.1028098E-02	-0.8342299E-03	-0.6121131E-03	
-0.3396949E-03	-0.6482175E-04	-0.1515649E-02	-0.1134325E-02	0.	-0.1056965E-02	-0.6967936E-03	
-0.4591067E-03	-0.2618277E-03	-0.3178312E-03	-0.2041373E-03	-0.4996077E-04	0.3829506E-03	0.1086071E-02	
-0.1615527E-02	-0.1799792E-02	0.	-0.1739216E-02	-0.1688271E-02	-0.1434813E-02	-0.1020882E-02	
-0.9189684E-03	-0.7767146E-03	-0.6824585E-03	-0.6209306E-03	-0.5680134E-03	0.2191486E-02	0.1456184E-02	
0.	0.1377487E-02	0.6248825E-03	-0.2065597E-03	-0.7691782E-03	-0.1350582E-02	-0.1458602E-02	
-0.1125966E-02	-0.3040597E-03	0.9721769E-03	0.8556628E-03	0.1627022E-02	0.	0.1642231E-02	
0.1934592E-02	0.1817258E-02	0.1568557E-02	0.9660601E-03	0.4439116E-03	-0.7661277E-04	-0.5380567E-03	
-0.9633979E-03	-0.1032256E-02	0.4245162E-03	-0.	0.4655156E-03	0.1784963E-02	0.3021294E-02	
0.4122175E-02	0.4633534E-02	0.4794804E-02	0.4285734E-02	0.2919924E-02	0.8560483E-03	-0.2105273E-02	
-0.1607022E-02	-0.	-0.1546291E-02	-0.3665475E-03	0.7192753E-04	0.1301828E-02	0.1582641E-02	
0.1974444E-02	0.1962483E-02	0.1520521E-02	0.7658211E-03	0.7442017E-03	-0.1307554E-02	-0.	
-0.1293709E-02	-0.3056368E-02	-0.4282301E-02	-0.4382607E-02	-0.4317302E-02	-0.3322936E-02	-0.2065078E-02	
-0.9174842E-03	-0.7563825E-04	0.1614747E-02	0.7591042E-03	-0.	0.7094830E-03	-0.2085388E-03	
-0.1033995E-02	-0.1491294E-02	-0.1856429E-02	-0.1695035E-02	-0.1292890E-02	-0.7571493E-03	-0.2363808E-03	
0.1237027E-03	0.8284602E-04	0.6327262E-04	0.1327779E-04	0.1179767E-04	-0.5280750E-04	-0.8870098E-04	
-0.8191707E-04	-0.1143515E-03	-0.9347414E-04	-0.1611266E-03	-0.1633227E-03	-0.1608578E-03	-0.1459596E-03	
-0.1935712E-03	-0.1358279E-03	-0.1232266E-03	-0.2154715E-03	-0.1091294E-03	-0.1287572E-03	-0.9755875E-04	
-0.4 19811E-04	0.1344906E-04	-0.5433032E-04	-0.3678392E-04	0.8083872E-04	0.1645603E-03	0.1865181E-03	
-0.8418763E-02	-0.	-0.1853011E-04	0.4939446E-03	-0.	-0.	-0.	
-0.	0.2867745E-02	-0.1592786E-02	0.4577264E-02	0.4096946E-02	-0.	0.3651150E-02	
0.3139307E-02	0.1844667E-02	0.6417226E-03	-0.5964403E-03	-0.1457936E-02	-0.1575540E-02	-0.1168343E-02	
-0.3696987E-03	0.3027489E-03	-0.1222391E-02	-0.6312871E-02	-0.3895376E-14	-0.1977150E-02	0.9416017E-01	
0.1482731E-02	0.1335902E-02	0.5573838E-02	-0.4934365E-01	-0.1265672E-00	-0.1268796E-00	-0.6581153E-01	
-0.1246152E-00	-0.1791162E-01	-0.2236638E-14	-0.1395623E-01	0.7815549E-01	0.1338509E-00	0.1246111E-00	
0.5264306E-01	-0.4870377E-01	-0.1250405E-00	-0.1261036E-00	-0.6587370E-01	-0.1230711E-00	-0.7987328E-02	
-0.3504696E-14	-0.4014544E-02	0.9119642E-02	0.1446775E-00	0.1298716E-00	0.5231124E-01	-0.5206779E-01	
-0.1283996E-00	-0.1279164E-00	-0.6646952E-01	-0.1308279E-00	-0.2407143E-01	-0.2608245E-14	-0.2007487E-01	
0.7257371E-01	0.1291520E-00	0.1208507E-00	0.4970331E-01	-0.5097983E-01	-0.1267230E-00	-0.1272232E-00	
-0.6637917E-01	-0.1709245E-00	-0.1144630E-00	0.7923181E-15	-0.1083944E-00	0.5740485E-04	0.1173838E-00	
0.1879625E-00	0.1839210E-00	0.1160692E-00	0.2811368E-01	-0.2796814E-01	-0.3962909E-01	-0.1695889E-00	
-0.1163289E-00	0.2369190E-16	-0.1104979E-00	-0.6260413E-02	0.1075070E-00	0.1758381E-00	0.1705798E-00	
0.1023555E-00	0.1523211E-01	-0.3788551E-01	-0.4443727E-01	-0.1668963E-00	-0.1108151E-00	-0.2202211E-15	
-0.1148063E-00	0.2808894E-02	0.1168836E-00	0.1681600E-00	0.1830978E-00	0.1147888E-00	0.2690544E-01	
-0.2880460E-01	-0.4015103E-01	-0.1721399E-00	-0.1185448E-00	-0.5435394E-16	-0.1127312E-00	-0.8350530E-02	
0.1053601E-00	0.1736709E-00	0.1684664E-00	0.1004772E-00	0.1372754E-01	-0.3898676E-01	-0.4521551E-01	
-0.8333085E-03	-0.8105003E-03	-0.7350560E-03	-0.7350560E-03	0.4617827E-03	0.3960734E-03	-0.9936044E-03	
-0.9809654E-03	0.1035661E-02	0.1095415E-02	-0.1276581E-02	-0.1267314E-02	0.1340154E-02	0.1398661E-02	
-0.3167012E-04	-0.4273325E-04	0.4079121E-03	0.6296220E-03	-0.3354960E-03	-0.4443379E-03	0.2031423E-03	
0.4391949E-03	0.2725793E-03	0.1682054E-03	-0.2743306E-05	-0.1332268E-02	-0.5119454E-02	0.1901483E-01	
-0.2638217E-02	-0.3781069E-03	0.1168854E-02	0.1622972E-02	-0.3530987E-02	0.2029141E-01	-0.3819074E-02	
-0.3856601E-03	0.1149209E-02	0.1588944E-02	-0.5715917E-02	0.1888345E-01	-0.3880427E-02	-0.3792614E-03	
0.1163958E-02	0.1628534E-02	-0.3315447E-02	0.1696327E-01	-0.3705103E-02	-0.3868087E-03	0.1151370E-02	
0.1587816E-02	-0.2787343E-01	-0.4296871E-01	-0.6117604E-02	0.8468626E-04	0.5480634E-03	-0.4541724E-02	
-0.2573795E-02	-0.4338015E-01	-0.3979664E-03	0.5921108E-04	0.5519365E-03	-0.4536121E-02	-0.2793251E-01	
-0.4414190E-01	-0.6296160E-02	0.6773984E-04	0.5555516E-03	-0.4554643E-02	-0.2657775E-01	-0.4341894E-01	
-0.6397648E-02	0.6480271E-04	0.5615449E-03	-0.4545245E-02				

SA-5 RUN #3 MODE 23 XN = .1495421

0.4682945E-02	0.4608705E-02	0.4456962E-02	0.4288234E-02	0.4110571E-02	0.3952880E-02	0.3788541E-02
0.3638687E-02	0.3472920E-02	0.3329264E-02	0.3167210E-02	0.3010036E-02	0.2897420E-02	0.2738307E-02
0.2613515E-02	0.2472269E-02	0.2351487E-02	0.2201931E-02	0.2098200E-02	0.2008613E-02	0.1923828E-02
0.1846180E-02	0.1770241E-02	0.2539031E-02	0.1814799E-02	0.1715376E-02	0.1639741E-02	0.1562673E-02
-0.	-0.	-0.1196051E-03	0.1455819E-02	-0.	-0.	-0.
-0.	-0.1824309E-02	-0.1585329E-02	-0.2066843E-02	-0.2197908E-02	-0.	-0.2298228E-02
-0.2399459E-02	-0.2492312E-02	-0.2465926E-02	-0.2286999E-02	-0.1904859E-02	-0.1390578E-02	-0.8078283E-03
-0.1896706E-03	0.6265845E-03	-0.6960476E-04	0.1998738E-02	-0.	0.2111435E-02	0.3870028E-02
0.5288650E-02	0.6049401E-02	0.6342818E-02	0.5810317E-02	0.4611709E-02	0.2748313E-02	0.3965533E-03
0.1146391E-02	0.1368993E-02	-0.	0.1318767E-02	0.1188282E-02	0.6988311E-03	-0.1297043E-03
-0.6276666E-03	-0.1082258E-02	-0.1280498E-02	-0.1180020E-02	-0.8617750E-03	0.8132128E-04	-0.2102641E-02
-0.	-0.2110688E-02	-0.3808191E-02	-0.4912943E-02	-0.5489694E-02	-0.5252839E-02	-0.4668731E-02
-0.3777452E-02	-0.2701931E-02	-0.1592441E-02	-0.1063585E-02	-0.8521341E-03	-0.	-0.8388501E-03
-0.3469462E-03	0.3427329E-03	0.8552208E-03	0.1350660E-02	0.1433318E-02	0.1206717E-02	0.6804997E-03
-0.9659822E-05	-0.7931129E-03	0.1256103E-02	0.	0.1333581E-02	0.2965714E-02	0.4116968E-02
0.4527803E-02	0.4541238E-02	0.3976890E-02	0.3230001E-02	0.2524039E-02	0.1989625E-02	-0.6373144E-06
0.3015466E-03	0.	0.2632989E-03	0.2761999E-03	-0.1181907E-03	-0.6936109E-03	-0.1026178E-02
-0.1266978E-02	-0.1141588E-02	-0.5987817E-03	0.2949953E-03	0.1309387E-02	0.2068334E-03	0.
0.1928480E-03	-0.7874606E-03	-0.1629464E-02	-0.2464217E-02	-0.2815318E-02	-0.2896130E-02	-0.2409144E-02
-0.1242876E-02	0.4891365E-03	-0.1922705E-04	-0.1083124E-03	0.	-0.7721555E-04	0.3664556E-04
0.1906942E-03	0.2806176E-02	0.5219254E-03	0.5616210E-03	0.6060042E-03	0.6782657E-03	0.8445013E-03
-0.1340181E-02	-0.1289577E-02	-0.1260003E-02	-0.1194536E-02	-0.1186007E-02	-0.1099858E-02	-0.1047135E-02
-0.1044248E-02	-0.9938454E-03	-0.1004957E-02	-0.9579979E-03	-0.8865281E-03	-0.8682262E-03	-0.8627094E-03
-0.7802167E-03	-0.8198540E-03	-0.8028152E-03	-0.6578467E-03	-0.6587782E-03	-0.6413498E-03	-0.6026047E-03
-0.5864805E-03	-0.5599860E-03	-0.9260729E-03	-0.5496475E-03	-0.5478543E-03	-0.5516522E-03	-0.4810629E-03
0.9849705E-03	0.	0.4706458E-04	-0.4197153E-03	0.	0.	0.
0.	0.2757940E-04	0.3525073E-03	-0.5771727E-03	-0.9596193E-03	0.	-0.1255697E-02
-0.1548720E-02	-0.1789403E-02	-0.1691206E-02	-0.1280084E-02	-0.6728664E-03	-0.1977777E-03	0.3816021E-04
-0.3110926E-04	-0.2802319E-03	-0.2980523E-01	-0.6917583E-01	0.2860701E-14	-0.6959133E-01	-0.8497635E-01
-0.6106698E-01	0.3527787E-02	0.8329460E-01	0.1371271E-00	0.1251507E-00	0.3624246E-01	-0.6552166E-01
-0.3242009E-01	-0.7730322E-01	0.1641388E-14	-0.7792194E-01	-0.9784845E-01	-0.7683515E-01	-0.1216256E-01
0.7068931E-01	0.1297520E-00	0.1231404E-00	0.3735627E-01	-0.6421280E-01	-0.3285883E-01	-0.7334997E-01
0.2525792E-14	-0.7377306E-01	-0.8984451E-01	-0.6610192E-01	-0.1091166E-02	0.7948252E-01	0.1343399E-00
0.1234746E-00	0.3558880E-01	-0.6544392E-01	-0.3580499E-01	-0.8196355E-01	0.1810173E-14	-0.8764297E-01
-0.1037848E-00	-0.8370782E-01	-0.1935317E-01	0.6401152E-01	0.1242657E-00	0.1192827E-00	0.3530713E-01
-0.6473185E-01	-0.6387964E-02	-0.1343659E-02	-0.5514568E-15	-0.1677820E-02	-0.2124418E-02	0.9500653E-03
0.1874381E-01	0.4968968E-01	0.7424012E-01	0.6519715E-01	0.1054909E-01	-0.5313983E-01	-0.5785117E-02
-0.3794599E-02	-0.4293747E-16	-0.4338071E-02	-0.9935156E-02	-0.1213203E-01	0.2921785E-02	0.3467660E-01
0.6323995E-01	0.5948037E-01	0.9398299E-02	-0.5296453E-01	-0.6395505E-02	-0.2160419E-02	0.1587814E-15
-0.2478514E-02	-0.3796968E-02	-0.1326881E-02	0.1644904E-01	0.4762371E-01	0.7270977E-01	0.6421902E-01
0.1049696E-01	-0.5321724E-01	-0.9224920E-02	-0.8244385E-02	0.3916396E-16	-0.8805592E-02	-0.1540819E-01
-0.1818128E-01	-0.3080173E-02	0.2926491E-01	0.5887945E-01	0.5645332E-01	0.7784831E-02	-0.5331621E-01
0.1113445E-03	0.9713261E-04	0.5027522E-04	0.5027520E-04	0.8501219E-04	0.3793130E-03	-0.7073624E-03
-0.6975942E-03	-0.4844998E-03	-0.5237411E-03	-0.1533099E-02	-0.1514227E-02	0.5072282E-03	0.4644038E-03
-0.9476649E-04	0.6277404E-04	-0.5775897E-03	-0.6655992E-03	-0.7087392E-03	-0.1076681E-02	-0.4516911E-03
-0.6644853E-03	-0.1910078E-03	-0.1886534E-05	-0.6476457E-05	-0.9350120E-03	0.3462242E-01	0.2079652E-00
-0.3332018E-00	-0.2190811E-02	-0.4317706E-02	-0.2703614E-02	0.3426482E-01	0.2068018E-00	-0.3329143E-00
-0.2190823E-02	-0.4311571E-02	-0.2707979E-02	0.3378345E-01	0.2059249E-00	-0.3322924E-00	-0.2190803E-02
-0.4309842E-02	-0.2689729E-02	0.3549752E-01	0.2075468E-00	-0.3309317E-00	-0.2190222E-02	-0.4295677E-02
-0.2715322E-02	-0.1906631E-02	-0.1072730E-00	0.8452055E-03	0.2587036E-03	-0.1745363E-03	-0.2057129E-02
-0.2981634E-02	-0.1079871E-00	0.4892629E-03	0.2395984E-03	-0.1567724E-03	-0.2083276E-02	-0.3615887E-02
-0.1065070E-00	0.3198377E-03	0.2579790E-03	-0.1613664E-03	-0.2048949E-02	-0.2166915E-02	-0.1060455E-00
0.6112835E-03	0.2537305E-03	-0.1622962E-03	-0.2076555E-02			

SA-5 RUN #3 MODE 24 XN = 1373159

0.1161358E-02	0.1145175E-02	0.1116077E-02	0.1106174E-02	0.1107338E-02	0.1085990E-02	0.1073510E-02
0.1348311E-02	0.1035811E-02	0.1062186E-02	0.9018[illegible]E-03	0.9781467E-03	0.9153945E-03	0.9031118E-03
0.8632497E-03	0.8400586E-03	0.7967476E-03	0.7910991E-03	0.7472451E-03	0.7003415E-03	0.6591646E-03
0.6196334E-03	0.5835317E-03	0.1183611E-03	0.6338772E-03	0.5263069E-03	0.4962305E-03	0.4711983E-03
0.	0.	-0.3972241E-04	0.3744924E-03	0.	0.	0.
0.	-0.7707312E-03	-0.8818585E-03	-0.7[illegible]E-03	-0.7525750E-03	0.	-0.7450337E-03
-0.7347599E-03	-0.7093728E-03	-0.6755737E-03	-0.6181953E-03	-0.5231461E-03	-0.3989832E-03	-0.2559761E-03
-0.9799544E-04	0.7771472E-04	-0.7029125E-[illegible]	-0.4044715E-03	0.	-0.5293402E-03	-0.3935060E-03
-0.3521511E-03	-0.2231375E-03	-0.3159434E-03	-0.1788244E-03	0.8338614E-04	0.5842313E-03	0.1316463E-02
-0.9921161E-04	-0.8090471E-03	0.	-0.7719474E-03	-0.1103132E-02	-0.1079579E-02	-0.6556592E-03
-0.3157932E-03	-0.2674856E-03	-0.1120471E-[illegible]	-0.8921518E-04	-0.1617486E-03	0.8409723E-03	0.6372842E-03
0.	0.5609698E-03	0.2975242E-[illegible]	-0.1711165E-03	-0.3275256E-03	-0.6993949E-03	-0.7145816E-03
-0.4191455E-03	0.2286543E-03	0.1216632E-02	-0.1065846E-04	0.6942904E-03	0.	0.7133055E-03
0.9823856E-03	0.8982985E-03	0.7943166E-03	0.4[illegible]783E-03	0.1809525E-03	0.1389652E-04	-0.7271955E-04
-0.1435[illegible]4E-03	-0.4422145E-03	0.1671075E-[illegible]	-0.	0.1756029E-03	0.7796885E-03	0.1434955E-02
0.2140[illegible]12E-02	0.2433528E-02	0.2544488E-02	0.2[illegible]E-02	0.9723164E-03	-0.7663430E-03	-0.4131039E-03
-0.6965168E-03	-0.	-0.6535584E-03	-0.6411695E-03	-0.2019053E-03	0.4167952E-03	0.7857163E-03
0.1103819E-02	0.1083560E-02	0.6613801E-[illegible]	-0.1182716E-03	0.1624027E-03	-0.6646808E-03	-0.
-0.7[illegible]5E-03	-0.1395023E-02	-0.1927534E-02	-0.1923298E-02	-0.1858977E-02	-0.1460171E-02	-0.1132313E-02
-0.1124[illegible]E-02	-0.1499686E-02	0.4048321E-[illegible]	0.2534974E-03	-0.	0.2100483E-03	-0.1201807E-03
-0.4831532E-03	-0.5672649E-03	-0.8060636E-[illegible]	-0.7272995E-03	-0.6932541E-03	-0.4850133E-03	-0.4684411E-03
-0.3293395E-03	-0.3585167E-03	-0.3348121E-[illegible]	-0.3522697E-03	-0.3041771E-03	-0.3457316E-03	-0.3487173E-03
-0.2938[illegible]E-03	-0.2946675E-03	-0.2239481E-[illegible]	-0.2776341E-03	-0.2448583E-03	-0.2088769E-03	-0.1574299E-03
-0.1956399E-03	-0.9293902E-04	-0.5595079E-04	-0.1661129E-03	-0.1097691E-03	-0.7583287E-04	-0.6685631E-04
-0.3285724E-04	-0.1145909E-04	-0.1872489E-04	-0.5312402E-04	0.2580228E-04	0.8163282E-04	0.5125463E-04
-0.9977377E-03	-0.	-0.8742276E-[illegible]	0.1362[illegible]7E-03	-0.	-0.	-0.
-0.	0.5261252E-03	0.1221666E-[illegible]	0.9985322E-03	0.1232499E-02	-0.	0.1393116E-02
0.1309911E-02	0.1443460E-02	0.1090468E-[illegible]	0.4683128E-03	-0.1509727E-03	-0.4901324E-03	-0.5276692E-03
-0.2729755E-03	-0.4581297E-[illegible]	0.1721602E-01	0.6444259E-01	-0.3531932E-14	0.6537779E-01	0.9112549E-01
0.7748[illegible]E-[illegible]	0.1771972E-[illegible]	-0.6554327E-[illegible]	-0.1293316E-[illegible]	-0.1271752E-01	-0.4[illegible]870E-01	0.6693444E-01
0.1668187E-[illegible]	0.6269931E-01	-0.2028434E-14	0.6367554E-01	0.8941802E-01	0.7682733E-01	0.1783722E-01
-0.6[illegible]E-[illegible]	-0.1314456E-[illegible]	-0.1312424E-[illegible]	-0.4434941E-01	0.6466884E-01	0.1656890E-01	0.6339946E-01
-0.3123238E-14	0.6430401E-[illegible]	0.8973319E-[illegible]	0.7586673E-01	0.1602861E-01	-0.6707885E-01	-0.1304821E-00
-0.1278451E-[illegible]	-0.4034236E-[illegible]	0.6692394E-[illegible]	0.1469[illegible]8E-01	0.5977441E-01	-0.2260281E-14	0.6077827E-01
0.9537[illegible]5E-[illegible]	0.7405233E-[illegible]	0.1561768E-[illegible]	-0.6731071E-01	-0.1326[illegible]E-00	-0.1319482E-00	-0.4474376E-01
0.6453729E-[illegible]	-0.9950222E-[illegible]	-0.8770525E-[illegible]	0.6698808E-15	-0.7719164E-02	0.5184780E-02	0.1543[illegible]E-01
0.4623317E-02	-0.2847947E-01	-0.6296115E-01	-0.6469[illegible]E-01	-0.1434119E-01	0.5316814E-01	-0.8863869E-02
-0.7382201E-[illegible]	0.3772379E-16	-0.6347761E-[illegible]	0.7[illegible]74[illegible]2E-02	0.1886956E-01	0.7999640E-02	-0.2733838E-01
-0.5518[illegible]2E-[illegible]	-0.6990142E-[illegible]	-0.2015436E-[illegible]	0.4974[illegible]44E-01	-0.9127379E-02	-0.7531407E-02	-0.1952146E-15
-0.654[illegible]77E-02	0.6573491E-02	0.1670108E-01	0.5572131E-02	-0.2817392E-01	-0.6303702E-01	-0.6487454E-01
-0.1447546E-01	0.5314024E-01	-0.1049[illegible]E-01	-0.8575[illegible]2E-02	-0.5008565E-16	-0.7566989E-02	0.6630727E-02
0.1797765E-[illegible]	0.7[illegible]833E-02	-0.2835958E-[illegible]	-0.6612[illegible]7E-01	-0.7062230E-01	-0.2059668E-01	0.4957[illegible]0E-01
-0.1978495E-03	-0.1817190E-03	-0.1284413E-03	-0.1284413E-03	0.1185886E-03	-0.1487132E-03	0.6382877E-04
0.5847[illegible]E-[illegible]4	0.1008983E-02	0.1061058E-02	-0.1498024E-03	-0.1601984E-03	0.1079754E-02	0.1130857E-02
0.6113787E-03	0.8910759E-03	0.4076054E-03	0.4[illegible]9562E-03	0.5690478E-03	0.7409741E-03	0.1994351E-03
0.2221965E-03	0.2791264E-03	0.8467139E-[illegible]7	-0.1177[illegible]E-05	0.9736248E-03	-0.3858740E-01	-0.2104202E-00
0.3368995E-[illegible]	0.2372729E-02	0.4413862E-[illegible]	0.3[illegible]87168E-02	-0.3680735E-01	-0.2099695E-00	0.3367410E-00
0.2369474E-02	0.4417853E-02	0.3065937E-02	-0.3680[illegible]7E-01	-0.2107133E-00	0.3367127E-00	0.2371851E-02
0.4411117E-02	0.3090956E-02	-0.3661484E-[illegible]1	-0.2101543E-00	0.3370784E-00	0.2368671E-02	0.4419249E-02
0.3[illegible]654[illegible]E-02	-0.1679438E-[illegible]	0.1051[illegible]37E-[illegible]	-0.7271[illegible]E-03	-0.2535557E-03	0.2212571E-03	0.1388273E-02
-0.1426[illegible]74E-03	0.1048710E-[illegible]	-0.754479[illegible]E-[illegible]	-0.2[illegible]2798E-03	0.2312853E-03	0.1392364E-02	-0.4498847E-03
0.1[illegible]49[illegible]5E-[illegible]	-0.8444030E-03	-0.2584115E-[illegible]	0.2[illegible]43[illegible]E-03	0.1373557E-02	-0.1096376E-03	0.1[illegible]50866E-00
-0.894[illegible]3E-03	-0.2773383E-03	0.2341584E-[illegible]	0.1[illegible]884[illegible]E-02			

SA-5 RUN #3 MODE 25 XN = .04352938

0.1084963E-02	0.1044535E-02	0.9691476E-03	0.9187595E-03	0.8845010E-03	0.8216963E-03	0.7735126E-03
0.7068232E-03	0.6658858E-03	0.5950806E-03	0.5585917E-03	0.5204921E-03	0.4213990E-03	0.3979010E-03
0.3274149E-03	0.2889336E-03	0.2290556E-03	0.2237353E-03	0.1848237E-03	0.1572163E-03	0.1482516E-03
0.1518532E-03	0.1652787E-03	0.1217179E-02	0.1556934E-03	0.1530179E-03	0.1793973E-03	0.2146628E-03
0.	0.	-0.2160215E-04	0.2386236E-03	0.	0.	0.
0.	-0.4388666E-03	-0.6221312E-03	-0.4359616E-03	-0.4313815E-03	0.	-0.4259291E-03
-0.4172905E-03	-0.3975593E-03	-0.3724359E-03	-0.3338744E-03	-0.2752429E-03	-0.2028523E-03	-0.1219166E-03
-0.3505018E-04	0.5878908E-04	-0.4207795E-03	-0.2944455E-03	0.	-0.3571313E-03	-0.2919327E-03
-0.2717259E-03	-0.3008406E-04	-0.2724846E-03	-0.1170156E-03	0.1394791E-03	0.5878267E-03	0.1207897E-02
0.9163426E-03	-0.2320733E-04	0.	0.1657039E-04	-0.5631698E-03	-0.7521687E-03	-0.2881046E-03
-0.3985354E-03	-0.1931724E-03	-0.6259762E-04	-0.7630316E-04	-0.1971231E-03	0.3438658E-03	0.2554951E-03
0.	0.1661370E-03	0.5973260E-04	-0.1700850E-03	-0.5482273E-04	-0.4363840E-03	-0.3752537E-03
-0.9209359E-04	0.4206626E-03	0.1172490E-02	-0.7208576E-03	0.2182792E-04	0.	0.5198394E-04
0.3991904E-03	0.4399605E-03	0.6360625E-03	0.2458621E-03	0.1381653E-03	0.3957043E-04	-0.1660336E-04
-0.1015468E-03	-0.1082605E-03	0.1807154E-03	-0.	0.1715183E-03	0.4688742E-03	0.8312723E-03
0.1420745E-02	0.1357184E-02	0.1358289E-02	0.9265233E-03	-0.2464135E-04	-0.1446469E-02	0.5748962E-03
-0.1680970E-04	-0.	0.2660436E-04	-0.2907896E-03	-0.1450544E-03	0.3470815E-03	0.3368487E-03
0.5243794E-03	0.4700792E-03	0.1137977E-03	-0.5275309E-03	-0.1531492E-03	-0.4494741E-03	-0.
-0.4977302E-03	-0.7355245E-03	-0.9754331E-03	-0.7053424E-03	-0.9102434E-03	-0.7898779E-03	-0.8354901E-03
-0.1208929E-02	-0.1914603E-02	-0.2059368E-03	-0.6576880E-04	-0.	-0.1077769E-03	-0.1816493E-03
-0.2341059E-03	-0.5078360E-04	-0.3804833E-03	-0.3530273E-03	-0.3773599E-03	-0.4530558E-03	-0.6505791E-03
-0.4126161E-03	-0.4384082E-03	-0.3861656E-03	-0.3866992E-03	-0.3024632E-03	-0.3385976E-03	-0.3254234E-03
-0.2349690E-03	-0.2213057E-03	-0.1131075E-03	-0.1699348E-03	-0.1163113E-03	-0.6147418E-04	0.1535787E-04
-0.3067308E-04	0.1074502E-03	0.1563889E-03	0.1027625E-04	0.7036222E-04	0.9173177E-04	0.7504266E-04
0.8512165E-04	0.7393139E-04	0.3283417E-02	0.4228656E-04	0.8145954E-04	0.1131175E-03	0.3129911E-04
-0.3188417E-03	-0.	-0.4286330E-03	0.3371312E-04	-0.	-0.	-0.
-0.	-0.1105893E-02	0.1029326E-02	-0.1513906E-02	-0.9372923E-03	-0.	-0.4798369E-03
0.6496609E-05	0.5620789E-03	0.7467644E-03	0.6403220E-03	0.3222562E-03	0.3508001E-04	-0.1263904E-03
-0.1231139E-03	-0.1271973E-03	0.6148982E-01	0.4937546E-01	-0.2691157E-14	0.4883238E-01	0.3366062E-01
0.5693808E-02	-0.3270636E-01	-0.6155017E-01	-0.5039768E-01	0.2748355E-01	0.1666357E-00	0.2867961E-00
0.6089623E-01	0.4994227E-01	-0.1546453E-14	0.4948614E-01	0.3536998E-01	0.7888291E-02	-0.3149785E-01
-0.6266556E-01	-0.5456846E-01	0.2115561E-01	0.1608057E-00	0.2839471E-00	0.6075427E-01	0.4862236E-01
-0.2355915E-14	0.4805894E-01	0.3289556E-01	0.4922455E-02	-0.3353644E-01	-0.6232586E-01	-0.5098103E-01
0.2714911E-01	0.1665294E-00	0.2868530E-00	0.6105760E-01	0.4896109E-01	-0.1680970E-14	0.4850414E-01
0.3582260E-01	0.6252232E-02	-0.3287391E-01	-0.6371533E-01	-0.5527868E-01	0.2578844E-01	0.1606251E-00
0.2838914E-00	0.6090008E-01	0.3382521E-01	0.5146027E-15	0.3263340E-01	0.2323734E-02	-0.2540524E-01
-0.4736079E-01	-0.5613270E-01	-0.3442671E-01	0.3545721E-01	0.1486864E-00	0.2516772E-00	0.6147990E-01
0.3471654E-01	0.3372079E-16	0.3348391E-01	0.4366065E-02	-0.2213536E-01	-0.4438655E-01	-0.5521954E-01
-0.3679084E-01	0.3037773E-01	0.1431784E-00	0.2485026E-00	0.5996785E-01	0.3358452E-01	-0.1467063E-15
0.3231858E-01	0.2605130E-02	-0.2474668E-01	-0.4683369E-01	-0.5570423E-01	-0.3425928E-01	0.3552897E-01
0.1487133E-00	0.2517541E-00	0.5960926E-01	0.3354478E-01	-0.3858453E-16	0.3224449E-01	0.3670187E-02
-0.2258845E-01	-0.4484962E-01	-0.5567187E-01	-0.3722603E-01	0.3002718E-01	0.1429606E-00	0.2484565E-00
0.3886492E-04	0.4798824E-04	0.7808598E-04	0.7808670E-04	-0.3208851E-03	-0.6715988E-03	0.5388477E-04
0.4245277E-04	0.1074878E-02	0.1113465E-02	-0.9410790E-04	-0.1113471E-03	0.1019232E-02	0.1057614E-02
0.7157744E-03	0.1047401E-02	0.2246857E-03	0.1437153E-03	0.6986115E-03	0.1003519E-02	0.4104475E-04
-0.2994738E-04	0.6510267E-04	-0.7349787E-06	-0.6154330E-06	-0.2344675E-02	-0.2593419E-01	-0.6982724E-01
0.1298042E-00	-0.2904165E-02	0.2357220E-02	0.3470511E-03	-0.2375233E-01	-0.6946972E-01	0.1302955E-00
-0.2906190E-02	0.2372680E-02	0.3239120E-03	-0.2593341E-01	-0.7000388E-01	0.1299684E-00	-0.2904701E-02
0.2356272E-02	0.3493205E-03	-0.2355929E-01	-0.6927785E-01	0.1305256E-00	-0.2906759E-02	0.2373432E-02
0.3234183E-03	0.1087976E-01	0.5717951E-01	0.9107937E-04	0.6853931E-03	-0.5375121E-04	0.1822265E-02
0.1041383E-01	0.5703424E-01	-0.1933087E-03	0.6543153E-03	-0.3900246E-04	0.1820305E-02	0.1068077E-01
0.5737671E-01	0.1674882E-04	0.6862752E-03	-0.5154742E-04	0.1815487E-02	0.1067994E-01	0.5717992E-01
-0.1857689E-04	0.6558477E-03	-0.3865090E-04	0.1818313E-02			

SA-8 RUN #1 MODE 1 XN = 30 81019

0.2819219E-02	0.2589172E-02	0.2361534E-02	0.2101865E-02	0.1832002E-02	0.1712981E-02	0.1480094E-02
0.1239533E-02	0.9816344E-03	0.8231271E-03	0.6002299E-03	0.3897432E-03	0.1394731E-03	-0.2810909E-03
-0.6123839E-03	-0.9456889E-03	-0.1145360E-02	-0.1146615E-02	-0.1127675E-02	-0.1032856E-02	-0.8786993E-03
-0.6722861E-03	-0.5315683E-03	0.	-0.6706111E-03	-0.2749082E-03	-0.1998590E-05	0.2869680E-03
0.	0.	-0.4744539E-04	0.4278539E-03	0.	0.	0.
0.	-0.5842375E-02	-0.6519901E-02	-0.1758545E-02	0.5452470E-03	0.	0.1933062E-02
0.2843450E-02	0.2495528E-02	0.6998506E-03	-0.1808675E-02	-0.3759641E-02	-0.4099664E-02	-0.3315155E-02
-0.1873668E-02	-0.1804604E-05	0.1357813E-01	0.1369563E-01	0.	0.1363517E-01	0.1258929E-01
0.1037387E-01	0.7518460E-02	0.4279819E-02	0.1129294E-02	-0.1951031E-02	-0.5060110E-02	-0.8294989E-02
0.4520398E-01	0.3782481E-01	0.	0.3754932E-01	0.3079178E-01	0.2399651E-01	0.1710895E-01
0.1037726E-01	0.3328295E-02	-0.3875851E-02	-0.1114884E-01	-0.1841005E-01	-0.1355640E-01	-0.1369376E-01
0.	-0.1361938E-01	-0.1258998E-01	-0.1037906E-01	-0.7521378E-02	-0.4278207E-02	-0.1125300E-02
0.1955611E-02	0.5062974E-02	0.8291324E-02	-0.4525129E-01	-0.3784137E-01	0.	-0.3757034E-01
-0.3078578E-01	-0.2398056E-01	-0.1710636E-01	-0.1038174E-01	-0.3338275E-02	0.3865294E-02	0.1114243E-01
0.1841320E-01	-0.2264633E-01	-0.1731992E-01	-0.	-0.1716988E-01	-0.1306255E-01	-0.9731288E-02
-0.6845716E-02	-0.4393108E-02	-0.1678841E-02	0.1206585E-02	0.4148428E-02	0.7020791E-02	0.4141465E-01
0.3625870E-01	-0.	0.3601814E-01	0.3048824E-01	0.2411450E-01	0.1723050E-01	0.1017471E-01
0.2964322E-02	-0.4288842E-02	-0.1159287E-01	-0.1896178E-01	0.2255202E-01	0.1728281E-01	-0.
0.1713742E-01	0.1306560E-01	0.9753100E-02	0.6869573E-02	0.4410856E-02	0.1686144E-02	-0.1205738E-02
-0.4149942E-02	-0.7021158E-02	-0.4152004E-01	-0.3629295E-01	-0.	-0.3605105E-01	-0.3046861E-01
-0.2408629E-01	-0.1719993E-01	-0.1015273E-01	-0.2955019E-02	0.4291354E-02	0.1159082E-01	0.1896138E-01
0.1735547E-00	0.1659181E-00	0.1593594E-00	0.1523720E-00	0.1461432E-00	0.1436222E-00	0.1394619E-00
0.1355855E-00	0.1318539E-00	0.1299345E-00	0.1261754E-00	0.1225748E-00	0.1182002E-00	0.1105817E-00
0.1038559E-00	0.9619213E-01	0.9032017E-01	0.8548739E-01	0.8229672E-01	0.7912661E-01	0.7599881E-01
0.7289155E-01	0.6979522E-01	-0.	0.7159194E-01	0.6670408E-01	0.6361999E-01	0.6055003E-01
0.2063418E-06	-0.	-0.6965719E 00	0.5312446E-01	-0.	-0.	-0.
-0.	0.4756408E-01	0.5133854E-01	0.4296143E-01	0.4003229E-01	-0.	0.3745319E-01
0.3416183E-01	0.2826154E-01	0.2232186E-01	0.1502352E-01	0.6346350E-02	-0.2376113E-02	-0.1111309E-01
-0.1984188E-01	-0.3189662E-01	0.4466284E-01	0.3692381E-01	0.2460352E-12	0.3663916E-01	0.2954588E-01
0.2247965E-01	0.1547537E-01	0.8816968E-02	0.2046461E-02	-0.4721448E-02	-0.1152515E-01	-0.1849285E-01
-0.1447625E-01	-0.1472622E-01	0.1102088E-11	-0.1466657E-01	-0.1376909E-01	-0.1167236E-01	-0.8791291E-02
-0.5315247E-02	-0.1691850E-02	0.2001736E-02	0.5567940E-02	0.8620092E-02	-0.4467845E-01	-0.3693365E-01
0.4068322E-12	-0.3664598E-01	-0.2954992E-01	-0.2248490E-01	-0.1548174E-01	-0.8815990E-02	-0.2048225E-02
0.4719686E-02	0.1152579E-01	0.1849299E-01	0.1444833E-01	0.1470688E-01	0.5366216E-11	0.1464768E-01
0.1375825E-01	0.1166328E-01	0.8785629E-02	0.5308273E-02	0.1687860E-02	-0.2005521E-02	-0.5570331E-02
-0.8621689E-02	0.4174976E-01	0.3620335E-01	0.4952886E-12	0.3597158E-01	0.3048844E-01	0.2437718E-01
0.1773735E-01	0.1078854E-01	0.3493002E-02	-0.3977191E-02	-0.1148912E-01	-0.1886953E-01	0.2136321E-01
0.1579605E-01	0.1108622E-12	0.1558752E-01	0.1052707E-01	0.6099123E-02	0.2483659E-02	-0.6057961E-04
-0.2191553E-02	-0.3987699E-02	-0.5707802E-02	-0.7701909E-02	-0.4143827E-01	-0.3593674E-01	-0.1344489E-13
-0.3571993E-01	-0.3039112E-01	-0.2442603E-01	-0.1788079E-01	-0.1095887E-01	-0.3644511E-02	0.3871028E-02
0.1142920E-01	0.1884699E-01	-0.2168750E-01	-0.1603651E-01	-0.3556699E-12	-0.1581863E-01	-0.1060200E-01
-0.6033171E-02	-0.2338596E-02	0.2229242E-03	0.2330202E-02	0.4083457E-02	0.5760605E-02	0.7720576E-02
0.1402462E-05	-0.4345163E-06	-0.2173767E-05	-0.2173769E-05	0.2064933E-04	0.3137124E-05	-0.3049013E-02
-0.3044187E-02	-0.9809564E-02	-0.9809989E-02	0.3060022E-02	0.3054767E-02	0.9793597E-02	0.9793883E-02
0.5808218E-02	0.5158605E-02	-0.8512036E-02	-0.8903088E-02	-0.5813974E-02	-0.5160389E-02	0.8500740E-02
0.8898650E-02	0.4656209E-06	-0.1012255E-03	-0.2471543E-05	0.6176905E-08	-0.6539031E-02	0.3540368E-03
-0.3708153E-01	0.6774721E-05	-0.1000318E-03	0.1693089E-05	-0.7783764E-02	-0.3642304E-01	-0.6168323E-03
-0.3101365E-05	-0.1878793E-04	0.1104817E-03	0.6550641E-02	-0.3488003E-03	0.3708689E-01	-0.6803163E-05
0.1000685E-03	-0.1842835E-05	0.7769788E-02	0.3642083E-01	0.6158308E-03	0.3159591E-05	0.1878629E-04
-0.1102338E-03	-0.4023679E-03	-0.3585697E-01	0.8471690E-03	-0.9455944E-04	-0.1615323E-04	0.1074618E-04
-0.3624991E-01	-0.4412369E-03	-0.4190725E-02	-0.2005705E-04	0.1091819E-03	-0.5126743E-04	0.4110175E-03
0.3585774E-01	-0.8440367E-03	0.9440135E-04	0.1621239E-04	-0.1075244E-04	0.3624116E-01	0.4418821E-03
0.4193047E-02	0.2019413E-04	-0.1092154E-03	0.5135869E-04	0.2677440E-01	0.2545716E-01	0.2434137E-01
0.2325096E-01	0.2165504E-01	0.1171156E-00	0.1120913E-00	0.1079535E-00	0.1037919E-00	0.9878716E-01
0.3261165E-05						

SA-8 RUN #1 MODE 2 XN = 28.22816

0.1668330E-00	0.1593602E-00	0.1529493E-00	0.1461167E-00	0.1400267E-00	0.1375682E-00	0.1334986E-00
0.1297137E-00	0.1260732E-00	0.1242007E-00	0.1205399E-00	0.1170452E-00	0.1127992E-00	0.1054065E-00
0.9887353E-01	0.9144239E-01	0.8616583E-01	0.8105668E-01	0.7796208E-01	0.7490312E-01	0.7187231E-01
0.6886515E-01	0.6587693E-01	-0.	0.6761138E-01	0.6289084E-01	0.5991231E-01	0.5694161E-01
-0.	-0.	-0.7278712E-00	0.4977125E-01	-0.	-0.	-0.
-0.	0.4503569E-01	0.4893344E-01	0.4028333E-01	0.3732164E-01	-0.	0.3473165E-01
0.3145474E-01	0.2566560E-01	0.1994255E-01	0.1302727E-01	0.4029419E-02	-0.3130460E-02	-0.1118720E-01
-0.1925890E-01	-0.3070956E-01	0.4104358E-01	0.3546105E-01	-0.	0.3523057E-01	0.2968945E-01
0.2365725E-01	0.1723492E-01	0.1071465E-01	0.3867815E-02	-0.3165134E-02	-0.1033346E-01	-0.1757860E-01
-0.1843045E-01	-0.1590809E-01	-0.	-0.1580399E-01	-0.1330255E-01	-0.1058324E-01	-0.7693660E-02
-0.4765350E-02	-0.1696623E-02	0.1450005E-02	0.4652401E-02	0.7886022E-02	-0.4103948E-01	-0.3545586E-01
-0.	-0.3522555E-01	-0.2968370E-01	-0.2365136E-01	-0.1722954E-01	-0.1071039E-01	-0.3865182E-02
0.3165718E-02	0.1033169E-01	0.1757434E-01	0.1843032E-01	0.1590533E-01	-0.	0.1580124E-01
0.1329769E-01	0.1057703E-01	0.7687284E-02	0.4759619E-02	0.1692376E-02	-0.1452068E-02	-0.4651725E-02
-0.7882299E-02	0.4204984E-01	0.3629057E-01	0.	0.3605457E-01	0.3036332E-01	0.2420169E-01
0.1765795E-01	0.1101217E-01	0.4015800E-02	-0.3188496E-02	-0.1054317E-01	-0.1798050E-01	0.1599811E-01
0.1382544E-01	0.	0.1373599E-01	0.1158604E-01	0.9251953E-02	0.6766926E-02	0.4237036E-02
0.1568097E-02	-0.1184509E-02	-0.3997666E-02	-0.6844054E-02	-0.4204383E-01	-0.3628467E-01	0.
-0.3634840E-01	-0.3035763E-01	-0.2419632E-01	-0.1765300E-01	-0.1100782E-01	-0.4012487E-02	0.3190690E-02
0.1054407E-01	0.1798003E-01	-0.1598226E-01	-0.1381042E-01	0.	-0.1372098E-01	-0.1157113E-01
-0.9239120E-02	-0.6755197E-02	-0.4226734E-02	-0.1559687E-02	0.1191063E-02	0.4001949E-02	0.6846131E-02
-0.4758594E-02	-0.4550670E-02	-0.4372681E-02	-0.4182673E-02	-0.4012932E-02	-0.3944855E-02	-0.3831418E-02
-0.3726178E-02	-0.3625034E-02	-0.3573019E-02	-0.3470619E-02	-0.3373175E-02	-0.3254314E-02	-0.3047368E-02
-0.2863766E-02	-0.2655850E-02	-0.2496182E-02	-0.2364812E-02	-0.2277659E-02	-0.2192628E-02	-0.2107085E-02
-0.2022341E-02	-0.1938175E-02	0.	-0.1986706E-02	-0.1854405E-02	-0.1770824E-02	-0.1686906E-02
0.3170692E-06	0.	0.1931864E-01	-0.1484473E-02	0.	0.	0.
0.	-0.1328702E-02	-0.1442919E-02	-0.1197115E-02	-0.1116811E-02	0.	-0.1045971E-02
-0.9553623E-03	-0.7723408E-03	-0.6275637E-03	-0.4244728E-03	-0.1825866E-03	0.6049744E-04	0.3034474E-03
0.5452439E-03	0.8777921E-03	-0.1830169E-01	-0.1561399E-01	0.9945422E-19	-0.1550426E-01	-0.1286233E-01
-0.1002790E-01	-0.7065253E-02	-0.4112814E-02	-0.1074716E-02	0.1979629E-02	0.5019047E-02	0.8016213E-02
-0.4079186E-01	-0.3487404E-01	0.9619854E-19	-0.3463196E-01	-0.2879858E-01	-0.2251628E-01	-0.1592169E-01
-0.9327745E-02	-0.2523938E-02	0.4327985E-02	0.1115005E-01	0.1787379E-01	0.1832067E-01	0.1563362E-01
0.1046199E-18	0.1552410E-01	0.1288217E-01	0.1004684E-01	0.7082363E-02	0.4127122E-02	0.1085468E-02
-0.1973357E-02	-0.5017403E-02	-0.8019209E-02	0.4080263E-01	0.3488106E-01	-0.1949480E-19	0.3463886E-01
0.2880226E-01	0.2251650E-01	0.1591909E-01	0.9322533E-02	0.2516897E-02	-0.4336099E-02	-0.1115824E-01
-0.1788049E-01	0.1575589E-01	0.1323657E-01	-0.1080261E-18	0.1313736E-01	0.1072432E-01	0.8204709E-02
0.5634883E-02	0.3124411E-02	0.5728507E-03	-0.1974251E-02	-0.4507871E-02	-0.7023536E-02	-0.4148771E-01
-0.3491922E-01	-0.7819802E-19	-0.3466166E-01	-0.2836624E-01	-0.2177873E-01	-0.1504263E-01	-0.3440345E-02
-0.1712119E-02	0.5020229E-02	0.1172643E-01	0.1838798E-01	-0.1578003E-01	-0.1328976E-01	-0.1283513E-18
-0.1319170E-01	-0.1080034E-01	-0.8294892E-02	-0.5730526E-02	-0.3216203E-02	-0.6527691E-03	0.1912566E-02
0.4467448E-02	0.7004049E-02	0.4153430E-01	0.3497982E-01	-0.2556276E-18	0.3472215E-01	0.2843690E-01
0.2185580E-01	0.1512029E-01	0.8512279E-02	0.1772386E-02	-0.4976344E-02	-0.1170126E-01	-0.1838116E-01
0.3366776E-05	0.3374725E-05	0.3332276E-05	0.3382276E-05	-0.2713760E-05	-0.9285872E-06	-0.8873476E-02
-0.8872267E-02	0.3976563E-02	0.3976021E-02	0.8882499E-02	0.8881022E-02	-0.3986739E-02	-0.3986060E-02
-0.9067[illegible]E-02	-0.9103928E-02	-0.3456827E-02	-0.3467716E-02	0.9070784E-02	0.9105325E-02	0.3454893E-02
0.3465464E-02	-0.5524168E-06	0.2788815E-05	0.9579488E-04	-0.2582996E-07	-0.6755084E-02	-0.3502901E-01
0.1031442E-02	-0.3628913E-06	0.2867526E-05	0.9636309E-04	0.6358043E-02	0.9707817E-03	0.3509020E-01
0.8144653E-07	0.9765694E-04	-0.3044302E-05	0.6760869E-02	0.3503446E-01	-0.1033752E-02	0.2943521E-06
-0.2863288E-05	-0.9650606E-04	-0.6366471E-02	-0.9701187E-03	-0.3509560E-01	-0.1115077E-06	-0.9765540E-04
0.3184519E-05	-0.3453215E-01	0.9747126E-03	-0.3973771E-02	0.2217927E-05	0.9613238E-04	-0.7917420E-06
0.9778651E-03	0.3450630E-01	-0.9568816E-04	0.9363313E-04	-0.2525676E-05	0.2484780E-05	0.3453739E-01
-0.9776645E-03	0.3972520E-02	-0.2317738E-05	-0.9609584E-04	0.6810314E-06	-0.9827064E-03	-0.3450800E-01
0.9441390E-04	-0.9354002E-04	0.2476359E-05	-0.2482516E-05	0.1111174E-00	0.1061616E-00	0.1021453E-00
0.9800726E-01	0.9322960E-01	-0.2[illegible]E-01	-0.2730590E-01	-0.2628949E-01	-0.2524116E-01	-0.2396195E-01
0.3358716E-05						

SA-8 RUN #1 MODE 3 XN = 3 457658

0.3687225E-01	0.3294913E-01	0.2985037E-01	0.2673761E-01	0.2432463E-01	0.2345329E-01	0.2228043E-01
0.2142705E-01	0.2085811E-01	0.2077918E-01	0.2002606E-01	0.1930479E-01	0.1839839E-01	0.1672032E-01
0.1495299E-01	0.1262992E-01	0.1071989E-01	0.7585000E-02	0.5507489E-02	0.2920585E-02	-0.6480474E-04
-0.3399517E-02	-0.6326747E-02	-0.	-0.4263431E-02	-0.9997257E-02	-0.1377665E-01	-0.1766314E-01
-0.	-0.	0.1887741E-02	-0.2359151E-01	-0.	-0.	-0.
-0.	0.3984155E-01	0.4632566E-01	0.1096246E-01	-0.5106836E-02	-0.	-0.1470175E-01
-0.2075689E-01	-0.1716167E-01	-0.2794878E-02	0.1700132E-01	0.3181502E-01	0.3262544E-01	0.2332584E-01
0.7584868E-02	-0.1007868E-01	0.6387188E-02	-0.2957181E-01	-0.	-0.3040057E-01	-0.5423417E-01
-0.6654025E-01	-0.6881407E-01	-0.6227419E-01	-0.5166871E-01	-0.3746944E-01	-0.1980702E-01	0.8125238E-03
-0.7367957E-01	-0.1145030E-00	-0.	-0.1157592E-00	-0.1487546E-00	-0.1715785E-00	-0.1782425E-00
-0.1684750E-00	-0.1418305E-00	-0.1007568E-00	-0.4831484E-01	0.1095962E-01	-0.7284499E-02	0.2774132E-01
-0.	0.2844131E-01	0.5152713E-01	0.6322770E-01	0.6517304E-01	0.5861564E-01	0.4832522E-01
0.3474123E-01	0.1795307E-01	-0.1594778E-02	0.7149598E-01	0.1071933E-00	-0.	0.1083217E-00
0.1372017E-00	0.1571279E-00	0.1625917E-00	0.1531448E-00	0.1282426E-00	0.9012011E-01	0.4160493E-01
-0.1313504E-01	0.5450287E-01	0.4938157E-01	0.	0.4945121E-01	0.4894005E-01	0.5139033E-01
0.5263602E-01	0.5141845E-01	0.4341237E-01	0.2938750E-01	0.1102365E-01	-0.9273879E-02	-0.9808156E-02
0.6207327E-02	0.	0.6937648E-02	0.2331353E-01	0.4003442E-01	0.5368840E-01	0.6291783E-01
0.6591529E-01	0.6298623E-01	0.5527023E-01	0.4478231E-01	-0.5361174E-01	-0.4801138E-01	0.
-0.4809071E-01	-0.4712431E-01	-0.4917599E-01	-0.5014983E-01	-0.4887134E-01	-0.4103517E-01	-0.2744988E-01
-0.9753332E-02	0.9727299E-02	0.9769586E-02	-0.7882300E-02	0.	-0.8656195E-02	-0.2634494E-01
-0.4383329E-01	-0.5785447E-01	-0.6698113E-01	-0.6947627E-01	-0.6576257E-01	-0.5702349E-01	-0.4540744E-01
0.1974912E-00	0.1826834E-00	0.1702533E-00	0.1572667E-00	0.1461738E-00	0.1419220E-00	0.1344440E-00
0.1279985E-00	0.1221009E-00	0.1191019E-00	0.1144194E-00	0.1101291E-00	0.1050395E-00	0.9631312E-01
0.8874716E-01	0.8049485E-01	0.7096202E-01	0.6970184E-01	0.6682437E-01	0.6435932E-01	0.6201693E-01
0.5989670E-01	0.5779082E-01	0.	0.5891775E-01	0.5587758E-01	0.5403662E-01	0.5220844E-01
-0.1888027E-05	0.	-0.5782634E-02	0.4752202E-01	0.	0.	0.
0.	-0.3668457E-01	-0.3774066E-01	-0.3273246E-01	-0.2965849E-01	0.	-0.2682885E-01
-0.2303268E-01	-0.1573264E-01	-0.7914646E-02	0.1929113E-02	0.1334319E-01	0.2382271E-01	0.3287980E-01
0.3992653E-01	0.4748862E-01	-0.3388710E-01	-0.5789052E-02	0.2465233E-10	-0.4971314E-02	0.1700090E-01
0.3338078E-01	0.4366340E-01	0.4769877E-01	0.4797055E-01	0.4548243E-01	0.4224467E-01	0.4140187E-01
-0.7476874E-02	0.1558594E-01	0.1106998E-09	0.1595168E-01	0.2903794E-01	0.3249326E-01	0.2832296E-01
0.1774998E-01	0.5668271E-02	-0.6235407E-02	-0.1477422E-01	-0.1534840E-01	0.3418090E-01	0.5889764E-02
0.4086978E-10	0.5037686E-02	-0.1708071E-01	-0.3356317E-01	-0.4392390E-01	-0.4806722E-01	-0.4833473E-01
-0.4582314E-01	-0.4254993E-01	-0.4162712E-01	0.7894058E-02	-0.1529648E-01	0.5391898E-09	-0.1566891E-01
-0.2888640E-01	-0.3240944E-01	-0.2831812E-01	-0.1777101E-01	-0.5738678E-02	0.6152722E-02	0.1467537E-01
0.1524076E-01	-0.2684545E-01	-0.3743005E-01	0.4961060E-10	-0.3768498E-01	-0.4546890E-01	-0.4828042E-01
-0.4456090E-01	-0.3423074E-01	-0.1935766E-01	-0.1865942E-02	0.1559449E-01	0.3005946E-01	-0.3380967E-01
-0.4348465E-02	0.1106996E-10	-0.2999355E-02	0.2702484E-01	0.5194855E-01	0.6725196E-01	0.7007260E-01
0.6433659E-01	0.5219725E-01	0.3806896E-01	0.2768403E-01	0.2413358E-01	0.3437151E-01	-0.1347261E-11
0.3470304E-01	0.4278283E-01	0.4587809E-01	0.4234636E-01	0.3206506E-01	0.1729553E-01	0.6375965E-04
-0.1688201E-01	-0.3068522E-01	0.3698439E-01	0.7534164E-02	-0.3568918E-10	0.6153492E-02	-0.2418453E-01
-0.4937470E-01	-0.6478349E-01	-0.6765355E-01	-0.6208534E-01	-0.5034894E-01	-0.3688195E-01	-0.2728044E-01
-0.4671955E-04	-0.3300744E-04	-0.2006330E-04	-0.2006329E-04	-0.1289781E-03	-0.1802539E-04	-0.3445151E-02
-0.3441807E-02	0.8787770E-02	0.8777818E-02	0.3879258E-02	0.3867833E-02	-0.9158143E-02	-0.9141385E-02
-0.1833816E-01	-0.1320465E-01	-0.4390507E-02	-0.2891276E-03	0.1835300E-01	0.1320124E-01	0.4484786E-02
0.3538850E-03	0.2966383E-05	0.5733213E-04	0.3207177E-04	-0.8737947E-06	0.3791650E-02	-0.1449781E-01
0.5375801E-01	-0.5510034E-04	0.2670139E-04	-0.4841090E-04	0.1115579E-01	0.4947859E-01	0.1729240E-01
0.2697266E-04	0.1699266E-03	-0.1577714E-03	-0.3392497E-02	0.1470842E-01	-0.5378416E-01	0.5267503E-04
-0.2523092E-04	0.4095147E-04	-0.1148124E-01	-0.4949502E-01	-0.1755315E-01	-0.2823317E-04	-0.1720049E-03
0.1633981E-03	-0.6581467E-02	0.4844341E-01	-0.5774176E-02	0.9527808E-05	0.1311497E-03	-0.9993547E-04
0.5029933E-01	0.1594500E-01	0.2203858E-02	0.2187536E-03	-0.1220683E-03	0.4467608E-03	0.6713847E-02
-0.4857320E-01	0.5764889E-02	-0.1498634E-04	-0.1291292E-03	0.9401855E-04	-0.5045589E-01	-0.1596746E-01
-0.2227346E-02	-0.2129733E-03	0.1201192E-03	-0.4454435E-03	0.4191840E-01	0.3855662E-01	0.3621658E-01
0.3360717E-01	0.3241856E-01	0.1005167E-00	0.9755896E-01	0.9368663E-01	0.8817862E-01	0.8068700E-01
-0.6158910E-04						

SA-8 RUN #1 MODE 4 XN - 3 354867

0.2358934E-00	0.2160644E-00	0.1992462E-00	0.1817463E-00	0.1667510E-00	0.1609605E-00	0.1505236E-00
0.1414953E-00	0.1331572E-00	0.1287734E-00	0.1229533E-00	0.1176401E-00	0.1116714E-00	0.1015116E-00
0.9314896E-01	0.8435652E-01	0.7858136E-01	0.7492188E-01	0.7322746E-01	0.7246993E-01	0.7244522E-01
0.7304973E-01	0.7329548E-01	0.	0.7271326E-01	0.7448241E-01	0.7586529E-01	0.7744088E-01
0.	0.	-0.9027357E-02	0.7760175E-01	0.	0.	0.
0.	-0.8731674E-01	-0.9534090E-01	-0.5470870E-01	-0.3589257E-01	0.	-0.2371077E-01
-0.1403013E-01	-0.1002798E-01	-0.1537766E-01	-0.2291723E-01	-0.2288595E-01	-0.9933494E-02	0.1122864E-01
0.3623545E-01	0.6410461E-01	-0.9086789E-01	-0.9927018E-01	0.	-0.9965478E-01	-0.1086470E-00
-0.1153423E-00	-0.1139794E-00	-0.1040543E-00	-0.8254326E-01	-0.5148488E-01	-0.1345192E-01	0.2817130E-01
0.3646762E-01	0.3980539E-01	0.	0.3995096E-01	0.4371266E-01	0.4665175E-01	0.4633306E-01
0.4259761E-01	0.3411471E-01	0.2173287E-01	0.6512038E-02	-0.1016042E-01	0.9101288E-01	0.9912731E-01
0.	0.9960635E-01	0.1083598E-00	0.1149299E-00	0.1135308E-00	0.1036314E-00	0.8216895E-01
0.5118479E-01	0.1322734E-01	-0.2833308E-01	-0.3649221E-01	-0.3858593E-01	0.	-0.3872817E-01
-0.4146641E-01	-0.4372331E-01	-0.4319833E-01	-0.3953022E-01	-0.3139548E-01	-0.1957970E-01	-0.5096662E-02
0.1074359E-01	-0.5562994E-01	-0.8012484E-01	-0.	-0.8011618E-01	-0.7806481E-01	-0.7709229E-01
-0.7280750E-01	-0.6444365E-01	-0.4812097E-01	-0.2515236E-01	0.2459041E-02	0.3211976E-01	-0.3721723E-01
-0.3570838E-01	-0.	-0.3575236E-01	-0.3558201E-01	-0.3581491E-01	-0.3427607E-01	-0.3062415E-01
-0.2319604E-01	-0.1256618E-01	0.3089847E-03	0.1422358E-01	0.8437007E-01	0.7887796E-01	-0.
0.7889148E-01	0.7679246E-01	0.7574846E-01	0.7140521E-01	0.6305585E-01	0.4684109E-01	0.2412128E-01
-0.3121508E-02	-0.3233287E-01	0.3561933E-01	0.3402272E-01	-0.	0.3406107E-01	0.3380828E-01
0.3377214E-01	0.3212045E-01	0.2847980E-01	0.2121849E-01	0.1098600E-01	-0.1342523E-02	-0.1457954E-01
0.7298477E-03	0.8021249E-03	0.8271107E-03	0.8805438E-03	0.9568774E-03	0.9467822E-03	0.1003127E-02
0.1027657E-02	0.1042671E-02	0.1050534E-02	0.1102276E-02	0.1110382E-02	0.1151704E-02	0.1220766E-02
0.1342024E-02	0.1394344E-02	0.1453864E-02	0.1505939E-02	0.1567729E-02	0.1525924E-02	0.1594151E-02
0.1647241E-02	0.1685666E-02	-0.	0.1686607E-02	0.1702407E-02	0.1719682E-02	0.1785096E-02
0.1801652E-05	-0.	-0.1722282E-03	0.2020455E-02	-0.	-0.	-0.
-0.	0.8770210E-03	-0.7741381E-03	0.1627348E-02	0.1578129E-02	-0.	0.1540811E-02
0.1501339E-02	0.1450230E-02	0.1415924E-02	0.1385600E-02	0.1360989E-02	0.1359989E-02	0.1410856E-02
0.1546558E-02	0.1830361E-02	0.2183054E-01	0.2574775E-02	-0.2172255E-10	0.2079766E-02	-0.1198649E-01
-0.2121739E-01	-0.2574985E-01	-0.2576218E-01	-0.2359136E-01	-0.2022279E-01	-0.1739857E-01	-0.1756559E-01
0.5501616E-01	0.9437637E-02	-0.9737241E-10	0.8253375E-02	-0.2510168E-01	-0.4733264E-01	-0.5888708E-01
-0.6025950E-01	-0.5679959E-01	-0.5030627E-01	-0.4519471E-01	-0.4636820E-01	-0.2217566E-01	-0.2937662E-02
-0.3594604E-10	-0.2408507E-02	0.1163737E-01	0.2084620E-01	0.2538910E-01	0.2549884E-01	0.2337028E-01
0.2006740E-01	0.1732974E-01	0.1755244E-01	-0.5527008E-01	-0.9588725E-02	-0.4741710E-09	-0.8399307E-02
0.2505580E-01	0.4732602E-01	0.5892897E-01	0.6029837E-01	0.5686134E-01	0.5055606E-01	0.4523781E-01
0.4639467E-01	-0.2611179E-01	-0.1335513E-01	-0.4373320E-10	-0.1280374E-01	0.7423858E-03	0.1310465E-01
0.2225243E-01	0.2677897E-01	0.2798253E-01	0.2656028E-01	0.2410674E-01	0.2288466E-01	0.6348328E-01
0.3290840E-01	-0.9778356E-11	0.3138682E-01	-0.1790806E-02	-0.3192812E-01	-0.5409813E-01	-0.6463661E-01
-0.6693392E-01	-0.6261263E-01	-0.5572391E-01	-0.5175538E-01	0.2910322E-01	0.1618253E-01	0.1187405E-11
0.1549301E-01	0.7025300E-03	-0.1301058E-01	-0.2321566E-01	-0.2825392E-01	-0.2950809E-01	-0.2777889E-01
-0.2497702E-01	-0.2319280E-01	-0.6664923E-01	-0.3548454E-01	0.3141513E-10	-0.3387815E-01	0.6217961E-03
0.3211700E-01	0.5523183E-01	0.6619741E-01	0.6848102E-01	0.6384496E-01	0.5650871E-01	0.5208277E-01
-0.1616244E-03	-0.1735960E-03	-0.1849210E-03	-0.1849210E-03	0.2644583E-03	0.6717972E-04	0.1419642E-01
0.1417308E-01	-0.5710829E-02	-0.5701651E-02	-0.1398293E-01	-0.1395217E-01	0.5521536E-02	0.5509958E-02
0.2041908E-01	0.1704066E-01	0.8557252E-02	0.7170609E-02	-0.2051065E-01	-0.1704486E-01	-0.8659392E-02
-0.7161652E-02	0.3147741E-04	0.2253846E-05	-0.1081321E-03	0.1315419E-06	0.5743523E-02	0.7371948E-01
-0.9368323E-03	0.5298300E-04	0.2383528E-04	-0.4472562E-04	-0.9321519E-02	0.3155769E-02	-0.7517017E-01
-0.2384053E-04	-0.2231094E-03	0.7945112E-04	-0.5498507E-02	-0.7363409E-01	0.1018948E-02	-0.5312312E-04
-0.2302588E-04	0.4180264E-04	0.9157236E-02	-0.3194322E-02	0.7514284E-01	0.2455178E-04	0.2224764E-03
-0.7539413E-04	0.6502699E-01	0.3976521E-02	0.9618892E-02	0.5284567E-04	-0.2238956E-03	0.1244510E-03
0.1715793E-03	-0.7347523E-01	0.5744874E-03	-0.3115344E-03	0.7415246E-04	-0.4596867E-03	-0.6493526E-01
-0.3983525E-02	-0.9530470E-02	-0.5584677E-04	0.2251330E-03	-0.1250006E-03	-0.2545253E-03	0.7350869E-01
-0.4813524E-03	0.3143885E-03	-0.7554118E-04	0.4613513E-03	0.1118878E-00	0.1063932E-00	0.1014100E-00
0.9654122E-01	0.8849957E-01	-0.2412583E-01	-0.2397876E-01	-0.2302642E-01	-0.2122128E-01	-0.1859768E-01
-0.1491512E-03						

SA-8 RUN #1 MODE 5 XN = 3 350731

0.2149261E-00	0.1993887E-00	0.1861503E-00	0.1723191E-00	0.1603593E-00	0.1557021E-00	0.1473416E-00
0.1400081E-00	0.1331589E-00	0.1295296E-00	0.1245005E-00	0.1199025E-00	0.1146041E-00	0.1056177E-00
0.9817942E-01	0.9030104E-01	0.8510276E-01	0.8180169E-01	0.8019490E-01	0.7939368E-01	0.7922407E-01
0.7959984E-01	0.7959454E-01	0.	0.7917503E-01	0.8047969E-01	0.8153689E-01	0.8276353E-01
0.	0.	-0.9459309E-02	0.8217324E-01	0.	0.	0.
0.	-0.8565970E-01	-0.9256860E-01	-0.5481701E-01	-0.3686216E-01	0.	-0.2511106E-01
-0.1550078E-01	-0.1039608E-01	-0.1358389E-01	-0.1815423E-01	-0.1555274E-01	-0.1911735E-02	0.1832419E-01
0.4101281E-01	0.6649793E-01	-0.9367500E-01	-0.1072514E-00	0.	-0.1077813E-00	-0.1206215E-00
-0.1295944E-00	-0.1286414E-00	-0.1173899E-00	-0.9331519E-01	-0.5871331E-01	-0.1634351E-01	0.3013678E-01
0.2776018E-01	0.2483302E-01	0.	0.2479362E-01	0.2364192E-01	0.2320604E-01	0.2172736E-01
0.1909106E-01	0.1394661E-01	0.6868191E-02	-0.1456371E-02	-0.1023886E-01	0.9368946E-01	0.1068349E-00
0.	0.1074491E-00	0.1199337E-00	0.1286878E-00	0.1276435E-00	0.1164054E-00	0.9241309E-01
0.5795872E-01	0.1578832E-01	-0.3048041E-01	-0.2821330E-01	-0.2499694E-01	0.	-0.2498209E-01
-0.2357015E-01	-0.2299399E-01	-0.2154207E-01	-0.1890700E-01	-0.1377296E-01	-0.6691472E-02	0.1649337E-02
0.1046915E-01	-0.8200254E-01	-0.7727534E-01	-0.	-0.7728731E-01	-0.7576991E-01	-0.7499996E-01
-0.7065036E-01	-0.6203505E-01	-0.4566252E-01	-0.2292592E-01	0.4196711E-02	0.3323033E-01	-0.3939450E-01
-0.3476110E-01	-0.	-0.3468920E-01	-0.3170651E-01	-0.2932887E-01	-0.2573232E-01	-0.2074207E-01
-0.1284388E-01	-0.2627488E-02	0.9096468E-02	0.2139358E-01	0.8120943E-01	0.7728936E-01	-0.
0.7734535E-01	0.7642543E-01	0.7607126E-01	0.7191446E-01	0.6330597E-01	0.4678075E-01	0.2380002E-01
-0.3635610E-02	-0.3301879E-01	0.3798957E-01	0.3351847E-01	-0.	0.3344908E-01	0.3057997E-01
0.2809797E-01	0.2447150E-01	0.1949446E-01	0.1168647E-01	0.1695587E-02	-0.9714814E-02	-0.2161376E-01
0.2565568E-01	0.2389859E-01	0.2238650E-01	0.2083244E-01	0.1953504E-01	0.1899644E-01	0.1812583E-01
0.1734854E-01	0.1662825E-01	0.1626163E-01	0.1572323E-01	0.1518992E-01	0.1458777E-01	0.1355347E-01
0.1271863E-01	0.1172469E-01	0.1058362E-01	0.1046770E-01	0.1016406E-01	0.9805902E-02	0.9575422E-02
0.9357469E-02	0.9125641E-02	-0.	0.9271908E-02	0.8895938E-02	0.8676322E-02	0.8507441E-02
0.1163520E-05	-0.	-0.9135557E-03	0.8135134E-02	-0.	-0.	-0.
-0.	-0.3960367E-02	-0.5707762E-02	-0.2723731E-02	-0.2378991E-02	-0.	-0.2053028E-02
-0.1604020E-02	-0.7127370E-03	0.2646967E-03	0.1508729E-02	0.2959501E-02	0.4310163E-02	0.5529192E-02
0.6577602E-02	0.7867171E-02	0.1828386E-01	0.1994152E-02	-0.1963628E-10	0.1590389E-02	-0.1008984E-01
-0.1756214E-01	-0.2112395E-01	-0.2094487E-01	-0.1906614E-01	-0.1624036E-01	-0.1384780E-01	-0.1386933E-01
0.5625246E-01	0.1213822E-01	-0.8706501E-10	0.1097102E-01	-0.2170314E-01	-0.4428355E-01	-0.5720637E-01
-0.6073806E-01	-0.5964953E-01	-0.5546316E-01	-0.5132509E-01	-0.5198520E-01	-0.1859911E-01	-0.2375183E-02
-0.3247212E-10	-0.1941943E-02	0.9678664E-02	0.1709713E-01	0.2064765E-01	0.2054938E-01	0.1871516E-01
0.1596870E-01	0.1368423E-01	0.1379194E-01	-0.5643917E-01	-0.1224729E-01	-0.4283265E-09	-0.1107615E-01
0.2167698E-01	0.4427716E-01	0.5723266E-01	0.6075428E-01	0.5968149E-01	0.5548247E-01	0.5133781E-01
0.5198168E-01	-0.3082205E-01	-0.1964602E-01	-0.3953787E-10	-0.1915273E-01	-0.7182668E-02	0.4183611E-02
0.1347972E-01	0.1944282E-01	0.2318496E-01	0.2500038E-01	0.2588722E-01	0.2743452E-01	0.6194227E-01
0.3541264E-01	-0.8846687E-11	0.3412650E-01	0.5808922E-02	-0.1998418E-01	-0.3967299E-01	-0.5022165E-01
-0.5469242E-01	-0.5407044E-01	-0.5127579E-01	-0.5043611E-01	0.3351405E-01	0.2194476E-01	0.1073437E-11
0.2131806E-01	0.7869864E-02	-0.5067937E-02	-0.1556580E-01	-0.2208759E-01	-0.2580575E-01	-0.2712037E-01
-0.2726514E-01	-0.2801750E-01	-0.6472445E-01	-0.3741163E-01	0.2838723E-10	-0.3602984E-01	-0.6145449E-02
0.2123844E-01	0.4202905E-01	0.5304541E-01	0.5740350E-01	0.5623128E-01	0.5265031E-01	0.5098141E-01
-0.1564641E-03	-0.1674380E-03	-0.1778348E-03	-0.1778348E-03	0.2492440E-03	0.6320022E-04	0.1439748E-01
0.1439188E-01	-0.4822832E-02	-0.4822228E-02	-0.1399758E-01	-0.1398977E-01	0.4451328E-02	0.4451401E-02
0.1846762E-01	0.1546011E-01	0.8181943E-02	0.7222069E-02	-0.1856425E-01	-0.1547297E-01	-0.8269256E-02
-0.7202195E-02	0.2970837E-04	0.1006705E-04	-0.1042863E-03	-0.9938095E-07	0.6744182E-02	0.7557919E-01
0.5920204E-02	0.4797995E-04	0.3030453E-04	-0.6268038E-04	-0.7487608E-02	0.9512360E-02	-0.7668547E-01
-0.2017230E-04	-0.2037434E-03	0.5711419E-04	-0.6326768E-02	-0.7541433E-01	-0.5826875E-02	-0.4890514E-04
-0.2893007E-04	0.5656055E-04	0.7162902E-02	-0.9575738E-02	0.7656757E-01	0.2068019E-04	0.2022624E-03
-0.5030814E-04	0.6790544E-01	0.1013995E-01	0.8918179E-02	0.5294411E-04	-0.2097076E-03	0.1063807E-03
0.6275970E-02	-0.7494725E-01	0.7786609E-03	-0.2747235E-03	0.5962588E-04	-0.3992415E-03	-0.6775481E-01
-0.1018862E-01	-0.8835571E-02	-0.5840016E-04	0.2120338E-03	-0.1090284E-03	-0.6432437E-02	0.7498227E-01
-0.6926646E-03	0.2801101E-03	-0.6197062E-04	0.4017679E-03	0.1174602E-00	0.1124601E-00	0.1079267E-00
0.1035130E-00	0.9612733E-01	-0.1131757E-01	-0.1172011E-01	-0.1141866E-01	-0.1049038E-01	-0.9032997E-02
-0.1454308E-03						

SA-8 RUN #1 MODE 6 XN = 3 256019

0.2878103E-00	0.2653252E-00	0.2403258E-00	0.2264865E-00	0.2094566E-00	0.2028342E-00	0.1913572E-00
0.1813295E-00	0.1720725E-00	0.1673449E-00	0.1599187E-00	0.1530408E-00	0.1449841E-00	0.1311262E-00
0.1192000E-00	0.1060332E-00	0.9690062E-01	0.8864567E-01	0.8408244E-01	0.7999422E-01	0.7627754E-01
0.7287474E-01	0.6964598E-01	-0.	0.7150347E-01	0.6652453E-01	0.6350067E-01	0.6057564E-01
-0.	-0.	-0.6102594E-02	0.5368983E-01	-0.	-0.	-0.
-0.	-0.7888276E-01	-0.7524179E-01	-0.8154316E-01	-0.8245356E-01	-0.	-0.8313137E-01
-0.8361788E-01	-0.8270009E-01	-0.7855780E-01	-0.6858751E-01	-0.5034823E-01	-0.2718402E-01	-0.2580823E-02
0.2103481E-01	0.4174447E-01	-0.5472717E-01	-0.2558402E-01	-0.	-0.2458489E-01	0.4961914E-03
0.2200709E-01	0.3781484E-01	0.4771781E-01	0.5188462E-01	0.5077313E-01	0.4504938E-01	0.3618720E-01
0.2199559E-01	0.9543874E-02	-0.	0.9116431E-02	-0.1563196E-02	-0.1067407E-01	-0.1729977E-01
-0.2134004E-01	-0.2287949E-01	-0.2211641E-01	-0.1934251E-01	-0.1520283E-01	0.5460821E-01	0.2527802E-01
-0.	0.2428995E-01	-0.9455277E-03	-0.2256505E-01	-0.3842615E-01	-0.4832826E-01	-0.5244795E-01
-0.5124630E-01	-0.4539602E-01	-0.3638709E-01	-0.2181317E-01	-0.9030467E-02	-0.	-0.8598158E-02
0.2355598E-02	0.1166086E-01	0.1836495E-01	0.2239590E-01	0.2383767E-01	0.2290095E-01	0.1988587E-01
0.1547349E-01	-0.5552010E-01	-0.2847338E-01	0.	-0.2753017E-01	-0.3892591E-02	0.1697671E-01
0.3285959E-01	0.4333258E-01	0.4828326E-01	0.4811331E-01	0.4358393E-01	0.3621339E-01	-0.2328824E-01
-0.1161755E-01	0.	-0.1121275E-01	-0.1027993E-02	0.7929460E-02	0.1470617E-01	0.1910382E-01
0.2108267E-01	0.2081619E-01	0.1863814E-01	0.1521524E-01	0.5561038E-01	0.2884152E-01	0.
0.2790844E-01	0.4492326E-02	-0.1621488E-01	-0.3202114E-01	-0.4250415E-01	-0.4754587E-01	-0.4753407E-01
-0.4321556E-01	-0.3608755E-01	0.2335429E-01	0.1202642E-01	0.	0.1163216E-01	0.1724012E-02
-0.7039978E-02	-0.1371954E-01	-0.1812459E-01	-0.2020828E-01	-0.2012684E-01	-0.1819900E-01	-0.1506361E-01
0.1528403E-02	0.1376513E-02	0.1245104E-02	0.1108463E-02	0.9915139E-03	0.9426910E-03	0.8644702E-03
0.7926993E-03	0.7248346E-03	0.6900440E-03	0.6316243E-03	0.5739587E-03	0.5067917E-03	0.3904646E-03
0.2926256E-03	0.1770973E-03	0.7475349E-04	0.2278090E-04	-0.1976320E-04	-0.6722251E-04	-0.1061163E-03
-0.1447936E-03	-0.1950896E-03	0.	-0.1610318E-03	-0.2251594E-03	-0.2648484E-03	-0.3010131E-03
-0.2529251E-05	0.	0.8532139E-03	-0.3853618E-03	0.	0.	0.
0.	-0.2779302E-03	-0.4271680E-03	-0.1972129E-03	-0.1928056E-03	0.	-0.1863398E-03
-0.1743281E-03	-0.1430626E-03	-0.1027268E-03	-0.4913468E-04	0.8141779E-05	0.4526735E-04	0.5209699E-04
0.1758932E-04	-0.5209188E-04	0.2436426E-01	0.1733093E-01	-0.1577034E-18	0.1707965E-01	0.1079304E-01
0.4985070E-02	0.9622559E-04	-0.3873358E-02	-0.6947993E-02	-0.9248928E-02	-0.1097726E-01	-0.1251152E-01
0.5934367E-01	0.4088464E-01	-0.1988594E-19	0.4022934E-01	0.2384907E-01	0.8927708E-02	-0.3340702E-02
-0.1294649E-01	-0.1998498E-01	-0.2481866E-01	-0.2803846E-01	-0.3072429E-01	-0.2455307E-01	-0.1742949E-01
0.1117596E-19	-0.1717458E-01	-0.1081339E-01	-0.4947265E-02	-0.2251603E-04	0.3956015E-02	0.7036408E-02
0.9324951E-02	0.1103557E-01	0.1255492E-01	-0.5952757E-01	-0.4101714E-01	0.9521758E-19	-0.4036017E-01
-0.2393395E-01	-0.8970100E-02	0.3333517E-02	0.1296644E-01	0.2002329E-01	0.2486659E-01	0.2808714E-01
0.3076600E-01	-0.2924967E-01	-0.2955252E-01	-0.2433385E-19	-0.2950366E-01	-0.2873260E-01	-0.2661537E-01
-0.2302334E-01	-0.1802158E-01	-0.1190229E-01	-0.5014427E-02	0.2223572E-02	0.9411116E-02	0.6913637E-01
0.6948048E-01	0.1524083E-20	0.6933192E-01	0.6688717E-01	0.6118948E-01	0.5212645E-01	0.3996615E-01
0.2543614E-01	0.9460062E-02	-0.7033709E-02	-0.2334192E-01	0.2915490E-01	0.2929343E-01	0.6178426E-20
0.2922374E-01	0.2808668E-01	0.2537116E-01	0.2169422E-01	0.1659371E-01	0.1057658E-01	0.3962863E-02
-0.2889682E-02	-0.9665179E-02	-0.6937544E-01	-0.6941539E-01	0.1401022E-20	-0.6924404E-01	-0.6635146E-01
-0.6020479E-01	-0.5082673E-01	-0.3854683E-01	-0.2413079E-01	-0.8380866E-02	0.7805524E-02	0.2365868E-01
-0.7776082E-05	-0.8905877E-05	-0.9974307E-05	-0.9974302E-05	0.2028716E-04	0.4890051E-05	0.1348368E-01
0.1345992E-01	-0.5577878E-02	-0.5567987E-02	-0.1329000E-01	-0.1326219E-01	0.5380355E-02	0.5369383E-02
0.4859077E-02	0.9871708E-02	0.1925742E-02	0.4000714E-02	-0.4874343E-02	-0.9875528E-02	-0.1926517E-02
-0.3999237E-02	0.1568073E-05	-0.4010348E-06	-0.1473655E-03	0.1668913E-06	0.1283633E-01	0.5588911E-01
-0.9995633E-04	0.3763021E-05	0.6332229E-05	-0.1503446E-03	-0.7675570E-02	-0.1342354E-02	-0.5398546E-01
0.1223005E-06	-0.1153764E-03	-0.6589252E-05	-0.1265692E-01	-0.5584942E-01	0.1715007E-03	-0.3765558E-05
-0.5836206E-05	0.1471335E-03	0.7493331E-02	0.1267256E-02	0.5396186E-01	0.5178769E-06	0.1147086E-03
0.9945384E-05	0.5048383E-01	0.1615701E-03	0.8189552E-02	-0.6089456E-05	-0.1669384E-03	-0.1573543E-06
-0.2863227E-02	-0.5376604E-01	-0.2270169E-03	-0.2561890E-03	0.5183800E-04	-0.7937983E-04	-0.5040766E-01
-0.1669229E-03	-0.8186777E-02	0.3485609E-05	0.1682295E-03	-0.8694497E-06	0.2790811E-02	0.5379448E-01
0.2375771E-03	0.2597605E-03	-0.5312949E-04	0.8113373E-04	0.1450355E-00	0.1362284E-00	0.1288565E-00
0.1211658E-00	0.1118535E-00	-0.3226836E-01	-0.3603541E-01	-0.2934181E-01	-0.2748208E-01	-0.2505109E-01
-0.6567221E-05						

SA-8 RUN #1 MODE 7 XN = 3 039455

0.2148927E-00	0.2015442E-00	0.1904318E-00	0.1787972E-00	0.1688896E-00	0.1650196E-00	0.1588989E-00
0.1535192E-00	0.1486335E-00	0.1463692E-00	0.1413467E-00	0.1365676E-00	0.1307452E-00	0.1204971E-00
0.1111114E-00	0.1001168E-00	0.9200667E-01	0.8260035E-01	0.7676669E-01	0.7039310E-01	0.6360637E-01
0.5645037E-01	0.4989581E-01	0.	0.5418055E-01	0.4237459E-01	0.3474744E-01	0.2701257E-01
0.	0.	-0.2764785E-02	0.1344981E-01	0.	0.	0.
0.	0.1258155E-01	0.1905341E-01	-0.2626009E-01	-0.4759514E-01	0.	-0.5934969E-01
-0.6484642E-01	-0.5266827E-01	-0.2418737E-01	0.1397032E-01	0.4632339E-01	0.5784927E-01	0.5398401E-01
0.3966084E-01	0.2382837E-01	0.2152741E-01	0.3778012E-01	0.	0.3872249E-01	0.5967901E-01
0.8305497E-01	0.1004924E-00	0.1099006E-00	0.1060931E-00	0.9074760E-01	0.6662706E-01	0.3789928E-01
-0.9149090E-02	-0.1941594E-01	0.	-0.1990048E-01	-0.3164526E-01	-0.4375420E-01	-0.5233476E-01
-0.5655966E-01	-0.5423457E-01	-0.4618510E-01	-0.3372949E-01	-0.1886337E-01	-0.2194925E-01	-0.3835648E-01
0.	-0.3946451E-01	-0.6053059E-01	-0.8405980E-01	-0.1016024E-00	-0.1110223E-00	-0.1070875E-00
-0.9149341E-01	-0.6701648E-01	-0.3782471E-01	0.9634729E-02	0.1946098E-01	0.	0.1998642E-01
0.3133723E-01	0.4326024E-01	0.5194129E-01	0.5622731E-01	0.5397220E-01	0.4595477E-01	0.3348907E-01
0.1856186E-01	0.1073928E-01	0.1675816E-02	-0.	0.1861565E-02	0.2232516E-02	0.1047762E-01
0.2120697E-01	0.3245291E-01	0.3797318E-01	0.3817961E-01	0.3461778E-01	0.2963810E-01	0.7373841E-02
0.5630799E-02	-0.	0.5814852E-02	0.7721258E-02	0.1273690E-01	0.1795886E-01	0.2251689E-01
0.2371285E-01	0.2180028E-01	0.1761662E-01	0.1241504E-01	-0.9171280E-02	0.9098696E-05	-0.
-0.2120347E-03	-0.3904254E-03	-0.8426658E-02	-0.1899365E-01	-0.3021846E-01	-0.3588476E-01	-0.3648179E-01
-0.3351483E-01	-0.2926847E-01	-0.5431103E-02	-0.3367421E-02	-0.	-0.3556589E-02	-0.5205834E-02
-0.9659450E-02	-0.1461464E-01	-0.1913058E-01	-0.2056510E-01	-0.1926464E-01	-0.1595428E-01	-0.1184797E-01
-0.5357983E-03	-0.6366578E-03	-0.6567606E-03	-0.7266055E-03	-0.8369528E-03	-0.8095563E-03	-0.8940591E-03
-0.9229715E-03	-0.9349917E-03	-0.9417924E-03	-0.1019217E-02	-0.1018098E-02	-0.1073880E-02	-0.1164131E-02
-0.1350535E-02	-0.1411329E-02	-0.1501328E-02	-0.1560986E-02	-0.1655364E-02	-0.1565804E-02	-0.1670707E-02
-0.1747704E-02	-0.1799638E-02	-0.	-0.1810794E-02	-0.1812911E-02	-0.1826217E-02	-0.1924545E-02
-0.1028317E-04	-0.	0.1485405E-03	-0.2236744E-02	-0.	-0.	-0.
-0.	-0.9657784E-03	0.1224387E-02	-0.1879840E-02	-0.1740563E-02	-0.	-0.1624912E-02
-0.1487590E-02	-0.1270378E-02	-0.1086689E-02	-0.9059964E-03	-0.7649529E-03	-0.7342810E-03	-0.8566553E-03
-0.1193245E-02	-0.1785110E-02	0.7984197E-02	0.2472478E-01	0.3291478E-10	0.2497945E-01	0.3437435E-01
0.3628775E-01	0.3178302E-01	0.2184212E-01	0.1012987E-01	-0.1478971E-02	-0.1015005E-01	-0.1238643E-01
0.1495380E-01	0.5203270E-01	0.1475275E-09	0.5257513E-01	0.7273162E-01	0.7604258E-01	0.6542151E-01
0.4337202E-01	0.1821232E-01	-0.6225901E-02	-0.2387982E-01	-0.2720729E-01	-0.8033415E-02	-0.2477155E-01
0.5446112E-10	-0.2507847E-01	-0.3443929E-01	-0.3628264E-01	-0.3172631E-01	-0.2184276E-01	-0.1007103E-01
0.1570955E-02	0.1023802E-01	0.1250239E-01	-0.1495719E-01	-0.5214048E-01	0.7183982E-09	-0.5268888E-01
-0.7295195E-01	-0.7624995E-01	-0.6563179E-01	-0.4349883E-01	-0.1830253E-01	0.6220535E-02	0.2393440E-01
0.2731774E-01	-0.7159912E-02	-0.2523229E-01	0.6626512E-10	-0.2588060E-01	-0.4265306E-01	-0.5468029E-01
-0.5894645E-01	-0.5419098E-01	-0.4299333E-01	-0.2751963E-01	-0.1126092E-01	0.1543600E-02	0.1739842E-01
0.6177395E-01	0.1481850E-10	0.6363066E-01	0.1057397E-00	0.1358839E-00	0.1466660E-00	0.1346029E-00
0.1064345E-00	0.6740954E-01	0.2645559E-01	-0.6001926E-02	0.3657052E-02	0.2275607E-01	-0.1799248E-11
0.2362485E-01	0.4282988E-01	0.5723050E-01	0.6316912E-01	0.5900436E-01	0.4749142E-01	0.3101213E-01
0.1347909E-01	-0.5846655E-03	-0.1433477E-01	-0.5982700E-01	-0.4759879E-10	-0.6182014E-01	-0.1060861E-00
-0.1383413E-00	-0.1504667E-00	-0.1388180E-00	-0.1102712E-00	-0.7032526E-01	-0.2822084E-01	0.5371102E-02
0.1085732E-03	0.1271281E-03	0.1446796E-03	0.1446796E-03	-0.3022921E-03	-0.6592848E-04	-0.8885304E-03
-0.8779060E-03	0.2629565E-03	0.2590577E-03	0.3535210E-03	0.3369504E-03	0.2870198E-03	0.2920492E-03
-0.2216741E-01	-0.1078951E-01	-0.9315407E-02	-0.4667530E-02	0.2224385E-01	0.1079314E-01	0.9469763E-02
0.4694668E-02	-0.2602749E-04	-0.4048124E-05	-0.3594991E-04	0.5271140E-06	0.9280819E-02	0.2159432E-01
0.2858322E-02	-0.7619314E-04	-0.2229182E-04	-0.1672120E-03	0.5029774E-02	-0.4821634E-02	-0.1799620E-01
0.4166128E-04	0.1708839E-03	-0.1403304E-03	-0.9790502E-02	-0.2186733E-01	-0.2926279E-02	0.7834181E-04
0.2074586E-04	0.1751881E-03	-0.4532633E-02	0.4858994E-02	0.1819886E-01	-0.4181391E-04	-0.1695787E-03
0.1307796E-03	0.3053994E-01	-0.4655297E-02	-0.5113541E-02	-0.8510494E-04	0.1345621E-03	-0.1971874E-03
-0.3011962E-02	-0.1980032E-01	-0.1438418E-02	0.2293607E-03	-0.5550227E-04	0.6177267E-03	-0.3080806E-01
0.4738927E-02	0.5023982E-02	0.9214519E-04	-0.1370164E-03	0.2011719E-03	0.3253193E-02	0.1980774E-01
0.1352920E-02	-0.2359659E-03	0.5870131E-04	-0.6203325E-03	0.1296801E-00	0.1216720E-00	0.1156239E-00
0.1090367E-00	0.1038800E-00	-0.3046991E-01	-0.2787843E-01	-0.2642191E-01	-0.2559256E-01	-0.2493913E-01
0.8920202E-04						

SA-8 RUN #1 MODE 8 XN = 3.025524

0.2704173E-00	0.2467669E-00	0.2271196E-00	0.2067973E-00	0.1897839E-00	0.1832880E-00	0.1724335E-00
0.1632611E-00	0.1551283E-00	0.1512769E-00	0.1445673E-00	0.1383595E-00	0.1310454E-00	0.1183262E-00
0.1069597E-00	0.9395276E-01	0.8453086E-01	0.7413223E-01	0.6792052E-01	0.6137306E-01	0.5456795E-01
0.4752120E-01	0.4114244E-01	0.	0.4531857E-01	0.3383997E-01	0.2646626E-01	0.1901913E-01
0.	0.	-0.2186073E-02	0.6165169E-02	0.	0.	0.
0.	0.1071283E-01	0.1705766E-01	-0.2737370E-01	-0.4836902E-01	0.	-0.6010830E-01
-0.6597669E-01	-0.5538632E-01	-0.2916073E-01	0.6288125E-02	0.3661997E-01	0.4804110E-01	0.4564646E-01
0.3417949E-01	0.2130507E-01	0.2108018E-01	0.3749971E-01	0.	0.3844911E-01	0.5949909E-01
0.8279334E-01	0.9994654E-01	0.1088376E-00	0.1044457E-00	0.8850451E-01	0.6381554E-01	0.3454800E-01
-0.5150876E-02	-0.1217449E-01	0.	-0.1256597E-01	-0.2178043E-01	-0.3214654E-01	-0.4008168E-01
-0.4474079E-01	-0.4392259E-01	-0.3833013E-01	-0.2912000E-01	-0.1800555E-01	-0.2141584E-01	-0.3792501E-01
0.	-0.3903063E-01	-0.6013959E-01	-0.8354664E-01	-0.1007833E-00	-0.1096860E-00	-0.1051909E-00
-0.8904791E-01	-0.6406976E-01	-0.3442107E-01	0.5661221E-02	0.1241975E-01	0.	0.1285528E-01
0.2181991E-01	0.3209950E-01	0.4017046E-01	0.4487695E-01	0.4407012E-01	0.3841648E-01	0.2907722E-01
0.1776806E-01	0.9015000E-02	0.1059113E-02	-0.	0.1285306E-02	0.2612132E-02	0.1157605E-01
0.2264588E-01	0.3374916E-01	0.3879269E-01	0.3825841E-01	0.3377634E-01	0.2778027E-01	0.8359210E-02
0.6355558E-02	-0.	0.6525539E-02	0.8153575E-02	0.1278552E-01	0.1753046E-01	0.2150695E-01
0.2208463E-01	0.1955874E-01	0.1479396E-01	0.9045611E-02	-0.7384631E-02	0.9469007E-03	-0.
0.6973907E-03	-0.2222085E-03	-0.8808481E-02	-0.1962595E-01	-0.3070307E-01	-0.3597284E-01	-0.3598031E-01
-0.3230196E-01	-0.2728149E-01	-0.6397941E-02	-0.3872849E-02	-0.	-0.4020950E-02	-0.5200629E-02
-0.9141656E-02	-0.1354420E-01	-0.1747493E-01	-0.1835672E-01	-0.1656343E-01	-0.1283973E-01	-0.8378620E-02
-0.7725928E-02	-0.7488287E-02	-0.7225424E-02	-0.6991406E-02	-0.6833524E-02	-0.6704861E-02	-0.6605016E-02
-0.6471362E-02	-0.6330589E-02	-0.6257747E-02	-0.6193343E-02	-0.6065741E-02	-0.5964568E-02	-0.5785247E-02
-0.5729905E-02	-0.5533107E-02	-0.5326666E-02	-0.5343486E-02	-0.5342413E-02	-0.5180325E-02	-0.5204972E-02
-0.5210383E-02	-0.5189644E-02	-0.	-0.5236152E-02	-0.5141037E-02	-0.5095307E-02	-0.5130149E-02
-0.8811582E-05	-0.	0.4926407E-03	-0.5255313E-02	-0.	-0.	-0.
-0.	0.1073084E-02	0.3121255E-02	0.1019893E-04	-0.5179520E-04	-0.	-0.1191329E-03
-0.2239105E-03	-0.4623117E-03	-0.7538616E-03	-0.1154745E-02	-0.1663648E-02	-0.2202623E-02	-0.2792535E-02
-0.3462949E-02	-0.4421083E-02	0.8884583E-02	0.2334332E-01	0.3220775E-10	0.2353963E-01	0.3129246E-01
0.3233772E-01	0.2787306E-01	0.1875098E-01	0.8238230E-02	-0.2205978E-02	-0.1025636E-01	-0.1288198E-01
0.1383787E-01	0.4851678E-01	0.1443486E-09	0.4901902E-01	0.6785527E-01	0.7127067E-01	0.6230080E-01
0.4307194E-01	0.2108645E-01	-0.7011234E-03	-0.1725756E-01	-0.2187401E-01	-0.8934194E-02	-0.2340060E-01
0.5328741E-10	-0.2364484E-01	-0.3137181E-01	-0.3235214E-01	-0.2783451E-01	-0.1875969E-01	-0.8183579E-02
0.2294947E-02	0.1034257E-01	0.1299151E-01	-0.1384734E-01	-0.4861540E-01	0.7029119E-09	-0.4912269E-01
-0.6804898E-01	-0.7144602E-01	-0.6247399E-01	-0.4316737E-01	-0.2115006E-01	0.7105270E-03	0.1731610E-01
0.2197895E-01	-0.4924634E-02	-0.2107124E-01	0.6484283E-10	-0.2161350E-01	-0.3608300E-01	-0.4617613E-01
-0.4967908E-01	-0.4563403E-01	-0.3650323E-01	-0.2399373E-01	-0.1086812E-01	-0.5482421E-03	0.1699809E-01
0.5638170E-01	0.1450164E-10	0.5792988E-01	0.9377313E-01	0.1182202E-00	0.1258444E-00	0.1140696E-00
0.8936760E-01	0.5599454E-01	0.2116885E-01	-0.6610895E-02	0.1715184E-02	0.1893915E-01	-0.1760626E-11
0.1969339E-01	0.3658743E-01	0.4901699E-01	0.5412460E-01	0.5060350E-01	0.4109875E-01	0.2754357E-01
0.1311303E-01	0.1511899E-02	-0.1417903E-01	-0.5471396E-01	-0.4657451E-10	-0.5639725E-01	-0.9441160E-01
-0.1209593E-00	-0.1298965E-00	-0.1184943E-00	-0.9336766E-01	-0.5902757E-01	-0.2300617E-01	0.5947512E-02
0.8289548E-04	0.1013789E-03	0.1188654E-03	0.1188654E-03	-0.2820321E-03	-0.5819902E-04	-0.9736754E-03
-0.9926490E-03	-0.1257513E-03	-0.1163577E-03	0.4217976E-03	0.4410078E-03	0.6978804E-03	0.6868495E-03
-0.2018762E-01	-0.9117093E-02	-0.8712968E-02	-0.4275632E-02	0.2026445E-01	0.9125989E-02	0.8854659E-02
0.4303621E-02	-0.2185493E-04	-0.7101583E-05	-0.4174668E-04	0.4999123E-06	0.8309146E-02	0.1970372E-01
-0.3343581E-03	-0.7242699E-04	-0.2618364E-04	-0.1461200E-03	0.3075301E-02	-0.7562564E-02	-0.1634615E-01
0.3743074E-04	0.1500234E-03	-0.1211471E-03	-0.8828970E-02	-0.1997233E-01	0.2556516E-03	0.7455578E-04
0.2454430E-04	0.1544061E-03	-0.2560447E-02	0.7613077E-02	0.1654971E-01	-0.3763380E-04	-0.1486752E-03
0.1114605E-03	0.2763744E-01	-0.7239244E-02	-0.4254675E-02	-0.8090097E-04	0.1159981E-03	-0.1748859E-03
-0.5192937E-02	-0.1815897E-01	-0.1290650E-02	0.1857413E-03	-0.5088672E-04	0.5655156E-03	-0.2790583E-01
0.7322086E-02	0.4179314E-02	0.8808599E-04	-0.1186671E-03	0.1791214E-03	0.5440535E-02	0.1816323E-01
0.1217832E-02	-0.1925555E-03	0.5411797E-04	-0.5683052E-03	0.1295297E-00	0.1200284E-00	0.1127341E-00
0.1049479E-00	0.9820430E-01	-0.3552045E-01	-0.3259304E-01	-0.3074285E-01	-0.2939141E-01	-0.2805509E-01
0.6375938E-04						

SA-8 RUN #1 MODE 9 XN = 1 345992

0.4615448E-00	0.4008480E-00	0.3501574E-00	0.2979016E-00	0.2541588E-00	0.2375632E-00	0.2084993E-00
0.1841388E-00	0.1624501E-00	0.1516905E-00	0.1366104E-00	0.1230121E-00	0.1075308E-00	0.8111134E-01
0.5858522E-01	0.3399879E-01	0.1700779E-01	0.1645810E-02	-0.6709660E-02	-0.1415675E-01	-0.2089655E-01
-0.2706208E-01	-0.3285731E-01	0.	-0.2948833E-01	-0.3854264E-01	-0.4405796E-01	-0.4941336E-01
0.	0.	0.2615019E-02	-0.6142519E-01	0.	0.	0.
0.	0.2866168E-01	0.2779292E-01	0.2444597E-01	0.2202894E-01	0.	0.2119336E-01
0.2177036E-01	0.2618582E-01	0.3226754E-01	0.3820893E-01	0.4006557E-01	0.3575163E-01	0.2745258E-01
0.1669156E-01	0.4934322E-02	0.1754425E-01	0.5151640E-02	0.	0.4823127E-02	-0.4047315E-02
-0.9713791E-02	-0.1227813E-01	-0.1195014E-01	-0.9743782E-02	-0.5835630E-02	-0.3938935E-03	0.6194164E-02
-0.6888701E-02	-0.2135834E-02	0.	-0.2006603E-02	0.1320411E-02	0.3388179E-02	0.4294088E-02
0.4105373E-02	0.3258515E-02	0.1810290E-02	-0.1890577E-03	-0.2606615E-02	-0.1749564E-01	-0.5253842E-02
0.	-0.4973013E-02	0.3792029E-02	0.9382025E-02	0.1193296E-01	0.1165934E-01	0.9576134E-02
0.5841704E-02	0.6079168E-03	-0.5745173E-02	0.6837618E-02	0.2271287E-02	0.	0.2161133E-02
-0.1040882E-02	-0.3011915E-02	-0.3852084E-02	-0.3707992E-02	-0.2983123E-02	-0.1726078E-02	0.3254189E-04
0.2177797E-02	0.1679914E-01	0.3969940E-02	-0.	0.3628630E-02	-0.5797856E-02	-0.1217557E-01
-0.1530648E-01	-0.1526900E-01	-0.1298895E-01	-0.8685011E-02	-0.2631884E-02	0.4652613E-02	0.7512103E-02
0.1964147E-02	-0.	0.1823472E-02	-0.2255569E-02	-0.4979233E-02	-0.6325428E-02	-0.6305754E-02
-0.5332629E-02	-0.3502236E-02	-0.9313686E-03	0.2156910E-02	-0.1672106E-01	-0.3864802E-02	-0.
-0.3529957E-02	0.5944692E-02	0.1238156E-01	0.1556677E-01	0.1555939E-01	0.1328020E-01	0.8932891E-02
0.2800195E-02	-0.4587996E-02	-0.7418547E-02	-0.1912096E-02	-0.	-0.1771498E-02	0.2283461E-02
0.5072214E-02	0.6458467E-02	0.6470960E-02	0.5511751E-02	0.3655037E-02	0.1035241E-02	-0.2127587E-02
0.2205102E-01	0.1916420E-01	0.1676390E-01	0.1428003E-01	0.1218693E-01	0.1140669E-01	0.1001016E-01
0.8846932E-02	0.7812331E-02	0.7296875E-02	0.6560453E-02	0.5899754E-02	0.5128478E-02	0.3812346E-02
0.2669834E-02	0.1453657E-02	0.2170584E-05	-0.1458076E-03	-0.5647323E-03	-0.8969138E-03	-0.1230365E-02
-0.1527027E-02	-0.1803666E-02	-0.	-0.1654601E-02	-0.2059865E-02	-0.2307562E-02	-0.2563489E-02
0.4591964E-06	-0.	0.1304880E-03	-0.3146533E-02	-0.	-0.	-0.
-0.	0.6107122E-03	0.6647182E-03	0.6169743E-03	0.6182150E-03	-0.	0.6221831E-03
0.6306519E-03	0.6520128E-03	0.6744342E-03	0.6921913E-03	0.6849367E-03	0.6323774E-03	0.5269202E-03
0.3533108E-03	0.1592568E-04	-0.2124143E-02	0.1036971E-01	0.5449570E-11	0.1068568E-01	0.1961315E-01
0.2465858E-01	0.2526774E-01	0.2193813E-01	0.1600791E-01	0.8809353E-02	0.2096400E-02	-0.2143622E-02
-0.6331390E-02	0.2442069E-01	0.2445541E-10	0.2520596E-01	0.4720622E-01	0.5964011E-01	0.6112660E-01
0.5293884E-01	0.3836445E-01	0.2069376E-01	0.4276298E-02	-0.5997117E-02	0.2105020E-02	-0.1056816E-01
0.9028518E-11	-0.1089787E-01	-0.1995364E-01	-0.2506971E-01	-0.2568753E-01	-0.2232448E-01	-0.1630004E-01
-0.8984846E-02	-0.2162763E-02	0.2163761E-02	0.6462735E-02	-0.2438716E-01	0.1191062E-09	-0.2517435E-01
-0.4721882E-01	-0.5967230E-01	-0.6117564E-01	-0.5298216E-01	-0.3840307E-01	-0.2071091E-01	-0.4267607E-02
0.6040460E-02	0.8588467E-02	0.6624817E-02	0.1097057E-10	0.6678705E-02	0.6665157E-02	0.7920100E-02
0.9711571E-02	0.1139665E-01	0.1217798E-01	0.1166864E-01	0.9610255E-02	0.6013565E-02	-0.1903409E-01
-0.1348021E-01	0.2449798E-11	-0.1347672E-01	-0.1164683E-01	-0.1270406E-01	-0.1548536E-01	-0.1889839E-01
-0.2112781E-01	-0.2123762E-01	-0.1835348E-01	-0.1213082E-01	-0.8227424E-02	-0.5090610E-02	-0.2978529E-12
-0.5032127E-02	-0.3160996E-02	-0.2554896E-02	-0.3046966E-02	-0.4312584E-02	-0.5603877E-02	-0.6420161E-02
-0.6208676E-02	-0.4586882E-02	0.1882440E-01	0.1219394E-01	-0.7886553E-11	0.1209546E-01	0.8525584E-02
0.7798768E-02	0.9330879E-02	0.1231619E-01	0.1500507E-01	0.1635044E-01	0.1521208E-01	0.1086804E-01
-0.3069285E-04	-0.2713802E-04	-0.2376549E-04	-0.2376549E-04	-0.2107514E-04	0.1053057E-05	-0.7021106E-02
-0.7003241E-02	0.2791050E-02	0.2783910E-02	0.6081593E-02	0.6064307E-02	-0.1826962E-02	-0.1823162E-02
-0.7018797E-02	-0.4848250E-02	-0.3254132E-02	-0.2324505E-02	0.7037167E-02	0.4858487E-02	0.3259119E-02
0.2334585E-02	0.3465678E-05	-0.3270459E-05	0.5175994E-04	0.3229013E-06	-0.5750268E-02	0.1208616E-02
-0.1027208E-03	-0.7736683E-05	-0.2090449E-04	0.6057061E-04	0.2440397E-02	0.3260421E-03	-0.2063202E-02
0.4028904E-05	0.4288867E-04	-0.1542940E-04	0.4922287E-02	-0.1529149E-02	-0.8075347E-04	0.1001753E-04
0.1845320E-04	-0.4518418E-04	-0.1562795E-02	-0.1028696E-03	0.2353002E-02	-0.4935710E-05	-0.4008440E-04
-0.2028907E-06	0.4059394E-02	-0.4034474E-03	-0.3851350E-02	0.1867964E-05	0.7520280E-04	-0.6943522E-05
0.2065099E-02	-0.1682672E-02	0.1118773E-03	0.1177135E-03	-0.3148296E-04	0.1000273E-03	-0.4446142E-02
0.5198668E-03	0.3863609E-02	0.1024448E-04	-0.8071195E-04	0.1452867E-04	-0.1695464E-02	0.1625493E-02
-0.1209642E-03	-0.1296692E-03	0.3733632E-04	-0.1062120E-03	0.1127914E-00	0.9529262E-01	0.8097632E-01
0.6633972E-01	0.4915443E-01	-0.1992705E-01	-0.1719522E-01	-0.1476427E-01	-0.1210119E-01	-0.8822550E-02
-0.3416092E-04						

SA-8 RUN #1 MODE 10 XN = 1.014589

0.3950816E-00	0.3359126E-00	0.2864400E-00	0.2355831E-00	0.1931760E-00	0.1772033E-00	0.1483787E-00
0.1244958E-00	0.1032759E-00	0.9250514E-01	0.7977976E-01	0.6860138E-01	0.5637567E-01	0.3586832E-01
0.1916768E-01	0.1889849E-02	-0.9451996E-02	-0.1783617E-01	-0.2124570E-01	-0.2291473E-01	-0.2324406E-01
-0.2245256E-01	-0.2133797E-01	0.	-0.2220036E-01	-0.1955594E-01	-0.1745275E-01	-0.1502641E-01
0.	0.	0.7946350E-03	-0.1050308E-01	0.	0.	0.
0.	-0.9494023E-01	-0.9926036E-01	-0.7690108E-01	-0.6794351E-01	0.	-0.6439355E-01
-0.6594341E-01	-0.8316862E-01	-0.1104524E-00	-0.1413504E-00	-0.1562605E-00	-0.1400219E-00	-0.1021990E-00
-0.5049824E-01	-0.6290227E-02	-0.6655773E-01	-0.3035274E-01	0.	-0.2932746E-01	-0.2590217E-02
0.1375180E-01	0.2004286E-01	0.1872780E-01	0.1503533E-01	0.9958435E-02	0.3223518E-02	-0.5441013E-02
0.2779422E-01	0.1261340E-01	0.	0.1217548E-01	0.1130220E-02	-0.5479465E-02	-0.7895805E-02
-0.7145356E-02	-0.5461191E-02	-0.3233363E-02	-0.3107882E-03	0.3423631E-02	0.6694137E-01	0.3072649E-01
0.	0.2980067E-01	0.3013264E-02	-0.1335278E-01	-0.1967547E-01	-0.1843248E-01	-0.1488805E-01
-0.1003142E-01	-0.3587834E-02	0.4712283E-02	-0.2850831E-01	-0.1322621E-01	0.	-0.1281935E-01
-0.1619223E-02	0.5063624E-02	0.7412207E-02	0.6690565E-02	0.5126320E-02	0.3140796E-02	0.5740182E-03
-0.2711563E-02	-0.6793339E-01	-0.2712449E-01	-0.	-0.2592331E-01	0.5398823E-02	0.2614978E-01
0.3494887E-01	0.3350809E-01	0.2721531E-01	0.1792893E-01	0.6180735E-02	-0.7686133E-02	-0.2829331E-01
-0.1190822E-01	-0.	-0.1146634E-01	0.1026832E-02	0.8963141E-02	0.1219279E-01	0.1142555E-01
0.9074618E-02	0.5884618E-02	0.1966766E-02	-0.2665683E-02	0.6689859E-01	0.2659467E-01	-0.
0.2545595E-01	-0.5410374E-02	-0.2578923E-01	-0.3441929E-01	-0.3298291E-01	-0.2682879E-01	-0.1768563E-01
-0.6055423E-02	0.7728924E-02	0.2697170E-01	0.1117110E-01	-0.	0.1075085E-01	-0.1129795E-02
-0.8857951E-02	-0.1193230E-01	-0.1118799E-01	-0.8963112E-02	-0.5852115E-02	-0.1989415E-02	0.2670900E-02
0.1697814E-01	0.1475156E-01	0.1282277E-01	0.1088012E-01	0.9282433E-02	0.8609450E-02	0.7559443E-02
0.6630218E-02	0.5779402E-02	0.5355251E-02	0.4806846E-02	0.4225369E-02	0.3611571E-02	0.2550150E-02
0.1741950E-02	0.7226738E-03	-0.3633158E-03	-0.5613835E-03	-0.8526214E-03	-0.1280120E-02	-0.1498937E-02
-0.1724305E-02	-0.1967364E-02	-0.	-0.1794967E-02	-0.2229360E-02	-0.2489834E-02	-0.2664120E-02
0.1322133E-04	-0.	0.1494807E-03	-0.2925890E-02	-0.	-0.	-0.
-0.	0.4173066E-02	0.7830791E-03	0.5796866E-02	0.5707139E-02	-0.	0.5631532E-02
0.5528069E-02	0.5288729E-02	0.4943659E-02	0.4371859E-02	0.3531681E-02	0.2629257E-02	0.1831929E-02
0.1276428E-02	0.9657182E-03	0.2124721E-01	-0.2310747E-02	-0.4253300E-10	-0.2879837E-02	-0.1937966E-01
-0.2778587E-01	-0.2752814E-01	-0.2013242E-01	-0.9228860E-02	0.2207720E-02	0.1003270E-01	0.9016022E-02
0.5032808E-01	-0.4241687E-02	-0.1908848E-09	-0.5592243E-02	-0.4370760E-01	-0.6315796E-01	-0.6283005E-01
-0.4658062E-01	-0.2263751E-01	0.2639154E-02	0.2025301E-01	0.1859112E-01	-0.2123419E-01	0.2428992E-02
-0.7047173E-10	0.3053448E-02	0.1959086E-01	0.2796024E-01	0.2763617E-01	0.2021414E-01	0.9187557E-02
-0.2377587E-02	-0.1028131E-01	-0.9347795E-02	-0.5042081E-01	0.4298144E-02	-0.9296784E-09	0.5656689E-02
0.4391935E-01	0.6337068E-01	0.6302341E-01	0.4663948E-01	0.2259315E-01	-0.2831272E-02	-0.2054878E-01
-0.1895772E-01	-0.2292572E-01	-0.3396142E-02	-0.8561234E-10	-0.2342511E-02	0.2097576E-01	0.4190536E-01
0.5416784E-01	0.5533232E-01	0.4688793E-01	0.3179087E-01	0.1504562E-01	0.3043143E-02	0.5858226E-01
0.7962783E-02	-0.1911692E-10	0.4963755E-02	-0.5663748E-01	-0.1122134E-00	-0.1453007E-00	-0.1489466E-00
-0.1270716E-00	-0.8708936E-01	-0.4213269E-01	-0.8642169E-02	0.2573767E-01	0.4562507E-02	0.2324857E-11
0.3210943E-02	-0.2399523E-01	-0.4927689E-01	-0.6490721E-01	-0.6745870E-01	-0.5837574E-01	-0.4096573E-01
-0.2101651E-01	-0.5685089E-02	-0.6096241E-01	-0.8420401E-02	0.6155684E-10	-0.5203148E-02	0.6005997E-01
0.1196612E-00	0.1556403E-00	0.1603186E-00	0.1375809E-00	0.9525624E-01	0.4716495E-01	0.1046721E-01
-0.2114166E-03	-0.2269910E-03	-0.2414424E-03	-0.2414423E-03	0.3360646E-03	0.9729814E-04	0.7215359E-02
0.7102202E-02	-0.3550309E-02	-0.3504133E-02	-0.5685521E-02	-0.5550808E-02	0.2023248E-02	0.1972038E-02
0.2223932E-01	0.1820447E-01	0.8631654E-02	0.6942769E-02	-0.2229079E-01	-0.1818164E-01	-0.8799072E-02
-0.6968280E-02	0.4473679E-04	-0.1834586E-05	-0.9306651E-04	-0.1802996E-05	-0.1996851E-02	0.1155884E-01
-0.4498662E-02	0.6040151E-04	0.1622223E-05	0.1921604E-03	-0.1679838E-01	0.8716272E-03	-0.1176499E-01
-0.4537719E-04	-0.2220706E-03	0.1726941E-03	0.3434216E-02	-0.1080609E-01	0.4597011E-02	-0.6687456E-04
0.1967063E-05	-0.2163123E-03	0.1543184E-01	-0.9917055E-03	0.1110942E-01	0.4473649E-04	0.2176444E-03
-0.1469490E-03	-0.7807201E-02	0.3506877E-02	0.1482571E-01	0.6490237E-04	-0.2653064E-03	0.2299846E-03
0.5889661E-03	-0.1152183E-01	0.1666528E-02	-0.7017916E-03	0.1393995E-03	-0.7445777E-03	0.8480847E-02
-0.3794019E-02	-0.1469140E-01	-0.8445209E-04	0.2734187E-03	-0.2442705E-03	-0.1239968E-02	0.1148996E-01
-0.1515605E-02	0.7208272E-03	-0.1487130E-03	0.7512437E-03	0.6125552E-01	0.4924890E-01	0.3874297E-01
0.2788234E-01	0.1338861E-01	-0.9843918E-02	-0.9488788E-02	-0.8028342E-02	-0.5373986E-02	-0.1609868E-02
-0.1899614E-03						

SA-8 RUN #1 MODE 11 XN = 3237804

0.1496005E-00	0.1137985E-00	0.8516110E-01	0.5743540E-01	0.3641075E-01	0.2925592E-01	0.1743639E-01
0.9491885E-02	0.4706099E-02	0.3391892E-02	0.2855289E-02	0.2820748E-02	0.3460314E-02	0.4672968E-02
0.5735305E-02	0.6552906E-02	0.6948924E-02	0.5307550E-02	0.4582211E-02	0.3407409E-02	0.1810279E-02
-0.1016410E-03	-0.8761559E-03	-0.	0.3480518E-03	-0.3004004E-02	-0.5289399E-02	-0.7654898E-02
-0.	-0.	-0.1160431E-03	-0.1146629E-01	-0.	-0.	-0.
-0.	0.9425487E-01	0.1861136E-00	-0.5852757E-03	-0.4894240E-01	-0.	-0.9134878E-01
-0.1414829E-00	-0.2078676E-00	-0.2327118E-00	-0.2104722E-00	-0.1382334E-00	-0.5411908E-01	0.1666500E-01
0.5936347E-01	0.9416982E-01	0.1512260E-00	0.9480239E-01	-0.	0.9228780E-01	0.3447228E-01
-0.1391689E-01	-0.4118560E-01	-0.4370650E-01	-0.3191008E-01	-0.9575728E-02	0.1983077E-01	0.5314851E-01
-0.6176480E-01	-0.3893438E-01	-0.	-0.3795799E-01	-0.1447516E-01	0.5053488E-02	0.1589524E-01
0.1697737E-01	0.1234027E-01	0.3480178E-02	-0.8323722E-02	-0.2184086E-01	-0.1519704E-00	-0.9539878E-01
-0.	-0.9259043E-01	-0.3464916E-01	0.1395335E-01	0.4134616E-01	0.4389185E-01	0.3202233E-01
0.9616102E-02	-0.1979642E-01	-0.5310128E-01	0.6325786E-01	0.3989064E-01	-0.	0.3880070E-01
0.1489977E-01	-0.5039972E-02	-0.1627731E-01	-0.1735522E-01	-0.1262430E-01	-0.3650578E-02	0.8206432E-02
0.2172814E-01	0.1530601E-00	0.9644911E-01	0.	0.9372233E-01	0.3398505E-01	-0.1831013E-01
-0.4946199E-01	-0.5353802E-01	-0.4044171E-01	-0.1535024E-01	0.1685419E-01	0.5232632E-01	0.6438733E-01
0.4097639E-01	0.	0.3980564E-01	0.1485969E-01	-0.7096446E-02	-0.2002557E-01	-0.2162590E-01
-0.1618671E-01	-0.5909303E-02	0.7226105E-02	0.2170950E-01	-0.1518475E-00	-0.9521803E-01	0.
-0.9249111E-01	-0.3323140E-01	0.1841117E-01	0.4909861E-01	0.5302898E-01	0.4000422E-01	0.1508631E-01
-0.1697942E-01	-0.5237574E-01	-0.6294609E-01	-0.3954436E-01	0.	-0.3840270E-01	-0.1390415E-01
0.7218774E-02	0.1968625E-01	0.2115370E-01	0.1579346E-01	0.5704254E-02	-0.7319940E-02	-0.2175141E-01
0.1468744E-02	0.9860268E-03	0.5594140E-03	0.1624167E-03	-0.7573659E-04	-0.2137854E-03	-0.3571965E-03
-0.4830354E-03	-0.5710352E-03	-0.6030720E-03	-0.5902418E-03	-0.6033896E-03	-0.5875368E-03	-0.5452600E-03
-0.4195870E-03	-0.4010203E-03	-0.3637626E-03	-0.3156837E-03	-0.2455209E-03	-0.3189823E-03	-0.2411927E-03
-0.1780624E-03	-0.1292357E-03	0.	-0.1156754E-03	-0.1267955E-03	-0.1117626E-03	-0.3312038E-04
0.8384909E-05	0.	-0.5506265E-05	0.1252689E-03	0.	0.	0.
0.	0.2454356E-03	0.2832591E-03	-0.2147193E-03	-0.5732838E-03	0.	-0.8579702E-03
-0.1157373E-02	-0.1482765E-02	-0.1556585E-02	-0.1407403E-02	-0.1049074E-02	-0.6381219E-03	-0.2817346E-03
-0.2999977E-04	-0.4304411E-04	-0.6332374E-01	-0.4766975E-01	0.8524417E-10	-0.4677175E-01	-0.2791848E-01
-0.8954697E-02	0.5470620E-02	0.1137301E-01	0.1002073E-01	0.1341661E-02	-0.1204300E-01	-0.2386459E-01
-0.1540430E-00	-0.1140815E-00	0.3841729E-09	-0.1118263E-00	-0.6456049E-01	-0.1775688E-01	0.1745273E-01
0.3162202E-01	0.2818734E-01	0.6748918E-02	-0.2672538E-01	-0.5690877E-01	0.6410005E-01	0.4800797E-01
0.1418624E-09	0.4708557E-01	0.2786469E-01	0.8643752E-02	-0.5877524E-02	-0.1176927E-01	-0.1024133E-01
-0.1436448E-02	0.1207692E-01	0.2396358E-01	0.1543383E-00	0.1142369E-00	0.1872020E-08	0.1119773E-00
0.6458691E-01	0.1765576E-01	-0.1756952E-01	-0.3173270E-01	-0.2821779E-01	-0.6726884E-02	0.2679924E-01
0.5701092E-01	0.6539305E-01	0.5636864E-01	0.1714806E-09	0.5571173E-01	0.4330131E-01	0.2945311E-01
0.1740232E-01	0.1092500E-01	0.8543605E-02	0.1078053E-01	0.1672605E-01	0.2391418E-01	-0.1591425E-00
-0.1382293E-00	0.3810934E-10	-0.1365663E-00	-0.1045446E-00	-0.6726858E-01	-0.3475304E-01	-0.1701616E-01
-0.1109196E-01	-0.1790767E-01	-0.3490267E-01	-0.5510138E-01	-0.7008049E-01	-0.6406658E-01	-0.4657947E-11
-0.6342245E-01	-0.5120797E-01	-0.3499325E-01	-0.1982050E-01	-0.1093670E-01	-0.7453542E-02	-0.9589621E-02
-0.1593808E-01	-0.2353145E-01	0.1651904E-00	0.1460883E-00	-0.1236866E-09	0.1443692E-00	0.1118833E-00
0.7208679E-01	0.3655301E-01	0.1668365E-01	0.9918713E-02	0.1684555E-01	0.3434475E-01	0.5496666E-01
0.4853264E-03	0.4915468E-03	0.4963928E-03	0.4963927E-03	-0.4029416E-03	-0.1796865E-03	0.3036025E-02
0.3356127E-02	-0.1841628E-02	-0.1958331E-02	-0.3076750E-02	-0.3468915E-02	0.1831364E-02	0.1976041E-02
-0.1553427E-01	-0.7264354E-03	-0.6449608E-02	-0.3311703E-03	0.1566890E-01	0.6956908E-03	0.6471685E-02
0.2847436E-03	-0.9711670E-04	-0.1599637E-05	-0.2424917E-03	0.3344097E-06	0.1843912E-01	0.1244123E-00
0.6722502E-03	0.3657273E-04	0.1796664E-04	-0.3982339E-03	-0.1296046E-01	-0.5775597E-02	-0.1171153E-00
-0.6284811E-05	-0.2431925E-03	-0.8446778E-04	-0.1870392E-01	-0.1246090E-00	-0.6198059E-03	-0.3561099E-04
-0.1736073E-04	0.3976040E-03	0.1296595E-01	0.5609250E-02	0.1171979E-00	0.5988937E-05	0.2433083E-03
0.8181046E-04	0.1121961E-00	-0.2549987E-02	0.1249281E-01	-0.3789003E-04	-0.4119373E-03	-0.1142102E-03
0.3109923E-02	-0.1056612E-00	0.1422876E-02	-0.2296498E-03	-0.1021058E-03	0.6226746E-03	-0.1122608E-00
0.2551247E-02	-0.1276385E-01	0.3833362E-04	0.4118730E-03	0.1150653E-03	-0.3036446E-02	0.1057320E-00
-0.1693278E-02	0.2297155E-03	0.1024862E-03	-0.6211387E-03	0.2782457E-02	0.2180516E-02	0.2310371E-02
0.2046399E-02	0.5417648E-02	-0.1239564E-02	0.1339056E-02	0.1736333E-02	0.4947157E-03	-0.1769864E-02
0.4568349E-03						

SA-8 RUN #1 MODE 12 XN = .01465022

0.3916274E-02	0.2016975E-02	0.9170536E-04	-0.1063036E-02	-0.2492324E-02	-0.3107891E-02	-0.3150288E-02
-0.3827909E-02	-0.4081560E-02	-0.4284790E-02	-0.7007865E-02	-0.9844209E-02	-0.1378442E-01	-0.2031967E-01
-0.2527388E-01	-0.3078586E-01	-0.3366871E-01	-0.2665586E-01	-0.2483357E-01	-0.2087156E-01	-0.1524239E-01
0.8013245E-02	-0.7117863E-02	0.	-0.1193031E-01	0.1881918E-02	0.1141777E-01	0.2148067E-01
0.	0.	0.2109367E-04	-0.1764148E-03	0.	0.	0.
0.	-0.3260831E-00	-0.3266167E-00	-0.5727191E-01	0.1018004E-00	0.	0.1979975E-00
0.2645435E-00	0.2633688E-00	0.1855999E-00	0.8344008E-01	0.1181207E-01	-0.8639325E-02	-0.1181079E-01
-0.3022213E-01	0.6444270E-01	-0.2205866E-00	-0.6925609E-01	0.	-0.6769683E-01	0.1413808E-02
0.1566873E-01	0.1468334E-01	0.1472700E-03	-0.4159229E-03	0.7626705E-03	-0.6055120E-02	-0.2618553E-01
0.8889567E-01	0.2729937E-01	0.	0.2652140E-01	-0.7223969E-03	-0.5830212E-02	-0.5696583E-02
0.2395511E-03	0.1091637E-03	-0.6194954E-03	0.2258580E-02	0.1086858E-01	0.2214770E-00	0.6910494E-01
0.	0.6864255E-01	-0.1362943E-02	-0.1580011E-01	-0.1477568E-01	-0.1478453E-03	0.3625953E-03
-0.8152098E-03	0.6138961E-02	0.2629736E-01	-0.9140877E-01	-0.2835179E-01	0.	-0.2790551E-01
0.7499972E-03	0.6398969E-02	0.5595808E-02	-0.2675655E-03	-0.7877653E-04	0.7168589E-03	-0.2217638E-02
-0.1089852E-01	-0.2322129E-00	-0.7409502E-01	-0.	-0.7262538E-01	0.2370307E-02	0.2097443E-01
0.1964447E-01	0.2555212E-02	-0.3303987E-03	-0.4762147E-03	-0.7596583E-02	-0.2708494E-01	-0.9940047E-01
-0.3120687E-01	-0.	-0.3073088E-01	0.1521440E-02	0.8712940E-02	0.7942684E-02	0.8185902E-03
-0.2053009E-03	-0.1956579E-04	-0.2860119E-02	-0.1093927E-01	0.2257892E-00	0.7167399E-01	-0.
0.7045148E-01	-0.2505811E-02	-0.2037257E-01	-0.1911683E-01	-0.2286536E-02	0.2887843E-03	0.3675355E-03
0.7516870E-02	0.2708535E-01	0.9205962E-01	0.2854325E-01	-0.	0.2814573E-01	-0.1169610E-02
-0.8275204E-02	-0.7471555E-02	-0.5852068E-03	0.1370957E-03	-0.1956039E-04	0.2764480E-02	0.1093178E-01
-0.2039473E-03	-0.1073677E-04	-0.1267992E-03	-0.6356936E-04	0.2539964E-03	0.3956650E-04	0.2995679E-03
0.2995808E-03	0.2422749E-03	0.2206561E-03	0.3197705E-03	0.1146718E-03	0.6940792E-04	-0.1765832E-04
0.3802421E-03	0.1080043E-03	0.1581288E-03	0.2872231E-04	0.2220040E-03	-0.4297043E-03	-0.1991228E-03
-0.8421364E-04	-0.9516487E-04	-0.	0.1068015E-03	-0.2951297E-03	-0.4707688E-03	-0.2645424E-03
-0.1805620E-05	-0.	0.1532344E-05	0.3746064E-04	-0.	-0.	-0.
-0.	0.2102678E-02	-0.1787017E-02	0.3004502E-02	0.2196543E-02	-0.	0.1557796E-02
0.8781423E-03	0.8005521E-04	-0.2558893E-03	-0.2922212E-03	-0.1595148E-03	-0.7285396E-04	-0.2720481E-04
0.9350806E-04	0.4540073E-03	0.7309630E-01	0.2249690E-01	-0.8038191E-10	0.2222386E-01	0.4102417E-03
-0.2532966E-02	-0.1735498E-02	0.2857900E-02	0.4440862E-03	-0.2908516E-02	-0.1662515E-02	0.7739692E-02
0.1772855E-00	0.5256273E-01	-0.3565270E-09	0.5195497E-01	-0.1070961E-02	-0.7475212E-02	-0.4324963E-02
0.7260505E-02	0.1547150E-02	-0.6576638E-02	-0.3844886E-02	0.1889827E-01	-0.7383842E-01	-0.2282468E-01
-0.1315411E-09	-0.2234032E-01	-0.3175393E-03	0.2562128E-02	0.1649285E-02	-0.2592185E-02	-0.4799522E-03
0.2799075E-02	0.1642457E-02	-0.7732528E-02	-0.1779752E-00	-0.5283083E-01	-0.1733892E-08	-0.5220898E-01
0.1157166E-02	0.7503922E-02	0.4424641E-02	-0.7314134E-02	-0.1519692E-02	0.6542251E-02	0.3836159E-02
-0.1889749E-01	-0.6863789E-01	-0.2510489E-01	-0.1620744E-09	-0.2497901E-01	-0.3494176E-02	0.1491113E-02
0.1054712E-02	-0.4268225E-02	-0.2923479E-02	0.3346058E-03	-0.2434283E-03	-0.9222724E-02	0.1758699E-00
0.6843838E-01	-0.3666889E-10	0.6700244E-01	0.1026929E-01	-0.3936566E-02	-0.3764168E-02	0.9822415E-02
0.6721365E-02	-0.8970987E-03	0.2562403E-03	0.2195908E-01	0.8777352E-01	0.4012618E-01	0.4397957E-11
0.3921938E-01	0.9516532E-02	-0.8608957E-03	-0.2424755E-02	0.3279923E-02	0.2815007E-02	0.2614838E-03
0.8654232E-03	0.9547558E-02	-0.1952228E-00	-0.8253906E-01	0.1155058E-09	-0.8062170E-01	-0.1586784E-01
0.3658019E-02	0.5126824E-02	-0.8879354E-02	-0.6661228E-02	0.3853023E-03	-0.7903839E-03	-0.2223106E-01
-0.1655686E-03	-0.2597255E-03	-0.3501053E-03	-0.3501060E-03	0.1283233E-02	0.1718381E-03	0.3762050E-02
0.5267121E-02	-0.1435365E-02	-0.2056324E-02	-0.3658396E-02	-0.5449615E-02	0.1421933E-02	0.2160347E-02
0.6902551E-01	0.1486199E-01	0.2800933E-01	0.5833284E-02	-0.6955235E-01	-0.1495226E-01	-0.2865242E-01
-0.5951436E-02	0.3939734E-04	0.2497540E-05	0.5101467E-03	0.2892917E-08	-0.3539155E-01	-0.6033152E-01
-0.1482243E-01	0.4023193E-03	0.1919674E-03	0.2246837E-03	0.3358407E-01	0.1399727E-01	0.4852391E-01
-0.1103934E-03	-0.2611644E-03	0.2354037E-03	0.3527239E-01	0.6040991E-01	0.1480188E-01	-0.4028105E-03
-0.1931472E-03	-0.2215095E-03	-0.3340482E-01	-0.1387696E-01	-0.4852486E-01	0.1095708E-03	0.2601152E-03
-0.2374992E-03	-0.8129173E-01	0.6168630E-02	0.2544897E-02	0.2080968E-03	-0.2643712E-03	0.1977209E-03
-0.6606103E-02	0.6734793E-01	-0.7932338E-03	0.2629912E-03	0.1674366E-03	-0.1020470E-02	0.8122767E-01
-0.6206095E-02	-0.2395756E-02	-0.2075228E-03	0.2651357E-03	-0.1988539E-03	0.6614767E-02	-0.6734049E-01
0.9415140E-03	-0.2637151E-03	-0.1657712E-03	0.1020276E-02	-0.1103281E-01	-0.1124199E-01	-0.1274088E-01
-0.9601448E-02	-0.2403093E-01	0.2876287E-02	0.1437087E-02	0.1653616E-02	0.3200390E-02	0.6048439E-02
-0.1010707E-03						

SA-8 RUN #2 MODE 1 XN = 30 81018

0.7657638E-03	0.6434333E-03	0.5427358E-03	0.4363375E-03	0.3506776E-03	0.3189344E-03	0.2558251E-03
0.2056186E-03	0.1625639E-03	0.1400277E-03	0.1107596E-03	0.8543233E-04	0.5742711E-04	0.1103260E-04
-0.2858784E-04	-0.6641111E-04	-0.9175095E-04	-0.1128442E-03	-0.1208772E-03	-0.1271320E-03	-0.1280241E-03
-0.1277086E-03	-0.1201887E-03	-0.	-0.1229072E-03	-0.1187696E-03	-0.1124576E-03	-0.1051135E-03
-0.	-0.	0.1246084E-02	-0.9785521E-04	-0.	-0.	-0.
-0.	-0.8622370E-04	-0.8872647E-04	-0.9241318E-04	-0.9453178E-04	-0.	-0.9671190E-04
-0.9944685E-04	-0.1024427E-03	-0.1006056E-03	-0.9004418E-04	-0.6618111E-04	-0.3330693E-04	0.2854469E-05
0.3841977E-04	0.7603401E-04	0.1649446E-01	0.1571751E-01	-0.	0.1566058E-01	0.1448322E-01
0.1270605E-01	0.1032319E-01	0.7558148E-02	0.4356653E-02	0.8347457E-03	-0.2957939E-02	-0.6942860E-02
0.3990270E-01	0.3775552E-01	-0.	0.3761595E-01	0.3452811E-01	0.3002650E-01	0.2413582E-01
0.1740045E-01	0.9710620E-02	0.1330886E-02	-0.7637628E-02	-0.1702286E-01	-0.1649073E-01	-0.1570585E-01
-0.	-0.1565302E-01	-0.1447176E-01	-0.1269775E-01	-0.1033144E-01	-0.7571635E-02	-0.4376950E-02
-0.8586203E-03	0.2938585E-02	0.6928849E-02	-0.3989172E-01	-0.3775769E-01	-0.	-0.3760154E-01
-0.3452235E-01	-0.3003117E-03	-0.2413624E-01	-0.1739795E-01	-0.9710914E-02	-0.1331534E-02	0.7644274E-02
0.1703172E-01	-0.1675976E-01	-0.1621073E-01	0.	-0.1616395E-01	-0.1519990E-01	-0.1362540E-01
-0.1137107E-01	-0.8620267E-02	-0.5312122E-02	-0.1568468E-02	0.2529473E-02	0.6859364E-02	0.4016899E-01
0.3865558E-01	0.	0.3854460E-01	0.3606835E-01	0.3213464E-01	0.2661452E-01	0.1997346E-01
0.1207336E-01	0.3217824E-02	-0.6420308E-02	-0.1657406E-01	0.1677805E-01	0.1629317E-01	0.
0.1624472E-01	0.1532421E-01	0.1376491E-01	0.1150999E-01	0.8737299E-02	0.5400450E-02	0.1627673E-02
-0.2496723E-02	-0.6851057E-02	-0.4010930E-01	-0.3854527E-01	0.	-0.3842836E-01	-0.3592261E-01
-0.3199159E-01	-0.2649009E-01	-0.1987679E-01	-0.1201141E-01	-0.3179864E-02	0.6442027E-02	0.1658232E-01
0.1763386E-00	0.1688295E-00	0.1623743E-00	0.1554526E-00	0.1492659E-00	0.1467513E-00	0.1425809E-00
0.1386691E-00	0.1348833E-00	0.1329184E-00	0.1290428E-00	0.1253585E-00	0.1208521E-00	0.1130209E-00
0.1061031E-00	0.9823904E-01	0.9193805E-01	0.8727858E-01	0.8404510E-01	0.8087319E-01	0.7774028E-01
0.7465315E-01	0.7161124E-01	0.	0.7339056E-01	0.6855053E-01	0.6551341E-01	0.6248515E-01
0.2076088E-06	0.	-0.6860354E 00	0.5520385E-01	0.	0.	0.
0.	0.3911024E-01	0.4472241E-01	0.3283483E-01	0.2903936E-01	0.	0.2558122E-01
0.2107135E-01	0.1302952E-01	0.5529980E-02	-0.2289316E-02	-0.9329917E-02	-0.1435876E-01	-0.1843042E-01
-0.2226152E-01	-0.3144052E-01	0.3994341E-01	0.3748076E-01	0.3671564E-19	0.3732121E-01	0.3384440E-01
0.2876905E-01	0.2213210E-01	0.1457106E-01	0.6172822E-02	-0.2501909E-02	-0.1088100E-01	-0.1831534E-01
-0.1632674E-01	-0.1542376E-01	0.6737763E-19	-0.1535989E-01	-0.1400375E-01	-0.1194466E-01	-0.9206990E-02
-0.6060439E-02	-0.2555881E-02	0.1060284E-02	0.4537028E-02	0.7590064E-02	-0.3970454E-01	-0.3744135E-01
0.1048232E-19	-0.3728784E-01	-0.3395113E-01	-0.2896571E-01	-0.2236143E-01	-0.1478042E-01	-0.6329245E-02
0.2416320E-02	0.1087086E-01	0.1836214E-01	0.1646277E-01	0.1532777E-01	-0.2141851E-19	0.1525826E-01
0.1372977E-01	0.1157500E-01	0.8812468E-02	0.5700779E-02	0.2277159E-02	-0.1232819E-02	-0.4600962E-02
-0.7562816E-02	0.3789026E-01	0.3218589E-01	0.3473426E-20	0.3197599E-01	0.2671289E-01	0.2097063E-01
0.1465139E-01	0.8094573E-02	0.1130657E-02	-0.5875497E-02	-0.1258124E-01	-0.1863865E-01	0.1583599E-01
0.1343114E-01	0.2435183E-18	0.1334329E-01	0.1111629E-01	0.8688661E-02	0.6026712E-02	0.3276053E-02
0.3732008E-03	-0.2531196E-02	-0.5295235E-02	-0.7780462E-02	-0.3759675E-01	-0.3191058E-01	-0.1010305E-17
-0.3170270E-01	-0.2646302E-01	-0.2075603E-01	-0.1447257E-01	-0.7946463E-02	-0.1009965E-02	0.5973576E-02
0.1266259E-01	0.1870598E-01	-0.1572802E-01	-0.1356927E-01	-0.3367349E-18	-0.1348166E-01	-0.1128488E-01
-0.8776374E-02	-0.5991786E-02	-0.3138526E-02	-0.1737586E-03	0.2741003E-02	0.5467452E-02	0.7890234E-02
0.3022775E-04	0.2820097E-04	0.2628382E-04	0.2628382E-04	0.2165396E-05	-0.4147470E-05	-0.3287412E-02
-0.3287482E-02	-0.7977577E-02	-0.7978573E-02	0.3292453E-02	0.3292552E-02	0.7954073E-02	0.7955635E-02
0.3557585E-02	0.3398871E-02	-0.8478333E-02	-0.8118221E-02	-0.3551638E-02	-0.3398782E-02	0.8465437E-02
0.8102844E-02	-0.4176866E-05	-0.8130618E-04	-0.2568471E-06	0.3020968E-06	-0.5206091E-02	0.3190315E-03
-0.3293922E-01	0.1758890E-05	-0.8419419E-04	-0.3257776E-05	-0.5862203E-02	-0.3259334E-01	-0.1998565E-03
0.2703672E-05	0.1442222E-05	0.8906772E-04	0.5220609E-02	-0.3594722E-03	0.3298739E-01	-0.1214962E-05
0.8424965E-04	0.2853020E-05	0.5863812E-02	0.3254605E-01	0.2515236E-03	-0.2093290E-05	-0.1224627E-05
-0.8900873E-04	0.4734626E-03	-0.3238588E-01	0.2088473E-03	-0.4554324E-04	-0.1115465E-04	0.2754436E-04
-0.3344943E-01	0.6730275E-05	-0.2746411E-02	0.5558607E-05	0.7231289E-04	0.5615232E-05	-0.4719388E-03
0.3241079E-01	-0.2217502E-03	0.4549703E-04	0.1140431E-04	-0.2703082E-04	0.3342952E-01	0.2254409E-04
0.2733306E-02	-0.3351476E-06	-0.7215943E-04	-0.5012340E-05	0.2718499E-01	0.2597119E-01	0.2498237E-01
0.2398164E-01	0.2276785E-01	0.1198006E-00	0.1144[illegible]E-00	0.1107252E-00	0.1062641E-00	0.1007728E-00
0.3234705E-04						

SA-8 RUN #2 MODE 2 XN = 28.22817

0.1373827E-00	0.1299651E-00	0.1236434E-00	0.1170365E-00	0.1112407E-00	0.1089411E-00	0.1051744E-00
0.1017546E-00	0.9852715E-01	0.9691115E-01	0.9400207E-01	0.9124803E-01	0.8794149E-01	0.8218743E-01
0.7713799E-01	0.7133807E-01	0.6722154E-01	0.6324692E-01	0.6079235E-01	0.5837203E-01	0.5590863E-01
0.5346209E-01	0.5089991E-01	-0.	0.5234795E-01	0.4846522E-01	0.4595716E-01	0.4343916E-01
-0.	-0.	-0.5418859E 00	0.3741303E-01	-0.	-0.	-0.
-0.	0.3183670E-01	0.3438080E-01	0.2906214E-01	0.2725586E-01	-0.	0.2567329E-01
0.2365177E-01	0.1998764E-01	0.1621709E-01	0.1147667E-01	0.5728530E-02	-0.1419356E-03	-0.6124635E-02
-0.1224282E-01	-0.2090980E-01	0.3573586E-01	0.2335370E-01	-0.	0.2321681E-01	0.1650194E-01
0.1333901E-01	0.1095216E-01	0.8593095E-02	0.4292388E-02	-0.1200245E-02	-0.7006987E-02	-0.1232469E-01
0.4059004E-02	-0.1381831E-01	-0.	-0.1373688E-01	-0.1740408E-01	-0.1135384E-01	-0.3197384E-02
0.4478094E-02	0.7052950E-02	0.6357371E-02	0.4750605E-02	0.4174803E-02	-0.3514217E-01	-0.2311056E-01
-0.	-0.2290837E-01	-0.1638847E-01	-0.1327704E-01	-0.1073366E-01	-0.8433006E-02	-0.4169338E-02
0.1269059E-02	0.6940571E-02	0.1216504E-01	-0.4352874E-02	0.1369704E-01	-0.	0.1333393E-01
0.1718208E-01	0.1127625E-01	0.3117597E-02	-0.4510892E-02	-0.6935398E-02	-0.6136220E-02	-0.4566461E-02
-0.3972906E-02	0.2138382E-01	0.2301445E-01	0.	0.2274534E-01	0.1913039E-01	0.1167581E-01
0.3565753E-02	-0.3745800E-02	-0.8180163E-02	-0.1036843E-01	-0.1131841E-01	-0.1211929E-01	0.2968980E-01
0.7263857E-02	0.	0.7097395E-02	-0.1219606E-02	0.5021250E-03	0.5153988E-02	0.9878775E-02
0.9160539E-02	0.4536401E-02	-0.1572953E-02	-0.7013945E-02	-0.2049357E-01	-0.2440968E-01	0.
-0.2413205E-01	-0.2195004E-01	-0.1508288E-01	-0.7027846E-02	0.6738912E-03	0.5695697E-02	0.8549421E-02
0.1020294E-01	0.1173830E-01	-0.2837585E-01	-0.8185514E-02	0.	-0.8149860E-02	-0.1241481E-02
-0.3504420E-02	-0.8196597E-02	-0.1265057E-01	-0.1138799E-01	-0.6213192E-02	0.5143673E-03	0.6667290E-02
0.3337362E-00	0.2793171E-00	0.2341449E-00	0.1884822E-00	0.1508912E-00	0.1370937E-00	0.1124400E-00
0.9281453E-01	0.7608638E-01	0.6810651E-01	0.5974571E-01	0.5208095E-01	0.4417088E-01	0.3074198E-01
0.1978512E-01	0.8394395E-02	-0.5867055E-02	-0.7193406E-02	-0.1058637E-01	-0.1345724E-01	-0.1581883E-01
-0.1797182E-01	-0.1884090E-01	0.	-0.1776519E-01	-0.2061379E-01	-0.2249909E-01	-0.2427411E-01
0.3828243E-05	0.	0.1029424E-02	-0.2158340E-01	0.	0.	0.
0.	0.2653192E-01	0.2809071E-01	-0.1235203E-01	-0.3490125E-01	0.	-0.4866451E-01
-0.5836486E-01	-0.5875450E-01	-0.4819406E-01	-0.3411178E-01	-0.2403860E-01	-0.2009687E-01	-0.1690922E-01
-0.8833867E-02	-0.1067235E-05	0.2704166E-03	-0.5758486E-02	0.2859982E-15	-0.5562780E-02	-0.4477505E-02
-0.7161694E-03	-0.8596876E-03	-0.4292206E-02	-0.1200992E-01	-0.1827523E-01	-0.1737648E-01	-0.6029597E-02
-0.3842610E-01	-0.3123531E-01	0.3979463E-16	-0.3114085E-01	-0.2718765E-01	-0.2395656E-01	-0.1844269E-01
-0.1103669E-01	-0.1287558E-02	0.8089611E-02	0.1440642E-01	0.1609902E-01	-0.4888003E-02	0.4427225E-02
0.2517440E-15	0.4247444E-02	0.4866663E-02	0.1661500E-02	0.1665249E-02	0.4762874E-02	0.1226516E-01
0.1848666E-01	0.1761393E-01	0.6269278E-02	0.3343475E-01	0.2947691E-01	0.8187258E-16	0.2942254E-01
0.2721610E-01	0.2451209E-01	0.1886490E-01	0.1119874E-01	0.1304938E-02	-0.8046393E-02	-0.1424935E-01
-0.1588599E-01	0.2517784E-01	0.2121864E-01	-0.9202957E-17	0.2188459E-01	0.3047728E-01	0.4531244E-01
0.5587708E-01	0.5828077E-01	0.4782223E-01	0.2917769E-01	0.9816113E-02	-0.2544250E-02	-0.2525044E-01
-0.2093512E-01	0.1920907E-15	-0.2043435E-01	-0.1141782E-01	0.2290940E-03	0.1006129E-01	0.1634403E-01
0.1738409E-01	0.1508438E-01	0.1252467E-01	0.1286832E-01	-0.2963951E-01	-0.2413249E-01	0.3110296E-15
-0.2475427E-01	-0.3233744E-01	-0.4678648E-01	-0.5745983E-01	-0.6009588E-01	-0.4966402E-01	-0.3072454E-01
-0.1080632E-01	0.2211398E-02	0.2199082E-01	0.2358494E-01	-0.2239345E-14	0.2300078E-01	0.1455834E-01
0.1740048E-02	-0.9204589E-02	-0.1582668E-01	-0.1666989E-01	-0.1409532E-01	-0.1154899E-01	-0.1230369E-01
-0.4343304E-03	-0.3835192E-03	-0.3351950E-03	-0.3351948E-03	-0.2914548E-03	0.3260291E-04	-0.6438858E-02
-0.6588634E-02	0.2868894E-02	0.2522064E-02	0.6898256E-02	0.7066703E-02	-0.3143729E-02	-0.2720531E-02
-0.5011827E-02	-0.7972227E-02	-0.8029841E-02	-0.4646237E-05	0.5206370E-02	0.8121192E-02	0.8180353E-02
0.1293095E-03	0.5895452E-04	0.9795606E-04	0.7368224E-04	0.2616750E-05	0.5110339E-02	-0.2212274E-01
0.1136912E-02	-0.4625538E-05	0.1033019E-05	0.7687156E-04	0.7743612E-02	0.2173108E-02	0.2646118E-01
-0.5811430E-04	0.3928378E-04	0.1967913E-04	-0.4768518E-02	0.2183269E-01	-0.6040072E-03	0.1126314E-04
0.2516869E-05	-0.7995298E-04	-0.7936752E-02	-0.2648753E-02	-0.2605580E-01	0.6533362E-04	-0.3753218E-04
-0.1112793E-04	-0.2767539E-01	0.4395784E-02	-0.4123138E-02	0.1299970E-03	0.1223182E-03	-0.1134046E-03
0.4846154E-02	0.2321813E-01	0.1435649E-02	0.5183042E-04	-0.5263182E-05	0.2479067E-04	0.2782577E-01
-0.4211602E-02	0.4231026E-02	-0.1351994E-03	-0.1208867E-03	0.1181923E-03	-0.4910086E-02	-0.2291295E-01
-0.1315451E-02	-0.4784613E-04	0.2340670E-05	-0.1452233E-04	0.9769384E-01	0.9158132E-01	0.8671044E-01
0.8199785E-01	0.7661718E-01	0.2668943E-01	0.1931057E-01	0.1247237E-01	0.5860435E-02	-0.1384138E-02
-0.4780210E-03						

0.3183345E-01	0.7585964E-01	0.7081072E-01	0.6556199E-01	0.6106151E-01	0.5931603E-01	0.5629933E-01
0.5367288E-01	0.5124821E-01	0.5001686E-01	0.4817434E-01	0.4647836E-01	0.4450613E-01	0.4111914E-01
0.3822286E-01	0.3501703E-01	0.3279883E-01	0.3084902E-01	0.2974344E-01	0.2876242E-01	0.2785453E-01
0.2702654E-01	0.2615648E-01	0.	0.2662044E-01	0.2539699E-01	0.2463430E-01	0.2388995E-01
0.	0.	-0.2965079E-02	0.2209763E-01	0.	0.	0.
0.	-0.1532957E-01	-0.1640903E-01	-0.1333550E-01	-0.1205229E-01	0.	-0.1087031E-01
-0.9285917E-02	-0.6240733E-02	-0.2964579E-02	0.1213600E-02	0.6167121E-02	0.1083732E-01	0.1495899E-01
0.1824564E-01	0.2162796E-01	0.1693619E-02	0.4098301E-02	0.	0.4241651E-02	0.7056866E-02
0.9602649E-02	0.1096608E-01	0.1122133E-01	0.1034223E-01	0.8642212E-02	0.6361829E-02	0.3804022E-02
0.7389376E-01	0.1295024E-00	0.	0.1312423E-00	0.1761914E-00	0.2066755E-00	0.2155386E-00
0.2032070E-00	0.1710414E-00	0.1223073E-00	0.6047639E-01	-0.9426065E-02	-0.6191246E-03	-0.1805874E-02
0.	-0.1883960E-02	-0.3676071E-02	-0.5444650E-02	-0.6386168E-02	-0.6730252E-02	-0.6329288E-02
-0.5463630E-02	-0.4337638E-02	-0.3110165E-02	-0.7485692E-01	-0.1318849E-00	0.	-0.1337742E-00
-0.1798868E-00	-0.2112334E-00	-0.2205561E-00	-0.2081825E-00	-0.1754810E-00	-0.1258117E-00	-0.6274140E-01
0.8651681E-02	-0.2286998E-01	-0.6747731E-02	-0.	-0.6240549E-02	0.7133619E-02	0.1886201E-01
0.2843500E-01	0.3520991E-01	0.3938807E-01	0.4071466E-01	0.3944621E-01	0.3638835E-01	0.2186256E-01
0.1101632E-02	-0.	0.4844853E-03	-0.1534963E-01	-0.2811486E-01	-0.3801719E-01	-0.4424677E-01
-0.4720170E-01	-0.4636988E-01	-0.4194701E-01	-0.3498233E-01	0.2477194E-01	0.1044811E-01	-0.
0.1003251E-01	-0.1728777E-02	-0.1210797E-01	-0.2101536E-01	-0.2784133E-01	-0.3279390E-01	-0.3552262E-01
-0.3613703E-01	-0.3524222E-01	-0.2069620E-01	0.5206281E-03	-0.	0.1121870E-02	0.1746138E-01
0.3075193E-01	0.4090971E-01	0.4707948E-01	0.4973062E-01	0.4832263E-01	0.4315863E-01	0.3538277E-01
-0.1656671E-00	-0.1545464E-00	-0.1452311E-00	-0.1353818E-00	-0.1271013E-00	-0.1238549E-00	-0.1181876E-00
-0.1132344E-00	-0.1086998E-00	-0.1063654E-00	-0.1024628E-00	-0.9900258E-01	-0.9474824E-01	-0.8754163E-01
-0.8130595E-01	-0.7438438E-01	-0.6583174E-01	-0.6573416E-01	-0.6342921E-01	-0.6144574E-01	-0.5965463E-01
-0.5811796E-01	-0.5633539E-01	-0.	-0.5718242E-01	-0.5491757E-01	-0.5364958E-01	-0.5242350E-01
-0.1607085E-06	-0.	0.5715936E-02	-0.4750832E-01	-0.	-0.	-0.
-0.	0.4192912E-01	0.4074757E-01	0.3072910E-01	0.2340401E-01	-0.	0.1845755E-01
0.1385939E-01	0.8524279E-02	0.3802105E-02	-0.3671892E-02	-0.1466482E-01	-0.2555107E-01	-0.3445012E-01
-0.3974258E-01	-0.4658617E-01	0.3022213E-01	0.1055219E-01	-0.2255590E-15	0.9963052E-02	-0.5558217E-02
-0.1844016E-01	-0.2883489E-01	-0.3612288E-01	-0.4151428E-01	-0.4496671E-01	-0.4674106E-01	-0.4698526E-01
-0.9964563E-04	0.2119025E-03	-0.3493934E-16	0.1603516E-03	-0.5666026E-03	-0.1801490E-02	-0.2771095E-02
-0.3458013E-02	-0.3561040E-02	-0.3242696E-02	-0.2722656E-02	-0.2478934E-02	-0.3147615E-01	-0.1075146E-01
-0.2821195E-15	-0.1017679E-01	0.5697902E-02	0.1853048E-01	0.2875126E-01	0.3590124E-01	0.4124185E-01
0.4469990E-01	0.4649294E-01	0.4677095E-01	-0.1059564E-02	-0.2885223E-03	-0.5728587E-16	-0.2359118E-03
0.9134889E-03	0.2125604E-02	0.2938582E-02	0.3501215E-02	0.3528378E-02	0.3164970E-02	0.2611448E-02
0.2337371E-02	0.2673772E-01	0.2272424E-01	0.1018883E-16	0.2257005E-01	0.1861169E-01	0.1407358E-01
0.8048205E-02	0.1299996E-02	-0.6565702E-02	-0.1457228E-01	-0.2189825E-01	-0.2774466E-01	0.2752231E-01
0.2475093E-01	-0.3001402E-15	0.2455275E-01	0.2036377E-01	0.1462811E-01	0.7345512E-02	-0.5936650E-03
-0.9081810E-02	-0.1734669E-01	-0.2482102E-01	-0.3111430E-01	-0.2731625E-01	-0.2248828E-01	-0.4392051E-15
-0.2231965E-01	-0.1795489E-01	-0.1341131E-01	-0.7635262E-02	-0.1182407E-02	0.6473867E-02	0.1437890E-01
0.2168219E-01	0.2754682E-01	-0.2867675E-01	-0.2427183E-01	0.2575808E-14	-0.2411276E-01	-0.2003616E-01
-0.1470116E-01	-0.7576214E-02	0.4636686E-03	0.9093211E-02	0.1740864E-01	0.2482560E-01	0.3100176E-01
0.9561471E-04	0.9999392E-04	0.1044822E-03	0.1044822E-03	-0.1352537E-03	-0.2162932E-04	0.1043188E-03
0.8466882E-04	-0.7158909E-02	-0.7199226E-02	-0.1065035E-03	-0.8145138E-04	0.7098106E-02	0.7144858E-02
0.2923347E-02	0.3710293E-02	-0.4049415E-02	-0.3786844E-02	-0.2870471E-02	-0.3736302E-02	0.4128129E-02
0.3788263E-02	-0.1361309E-04	-0.4092207E-04	-0.2412640E-04	-0.1075053E-05	0.9005707E-03	0.2332717E-01
-0.4861493E-01	-0.2796983E-05	-0.4539202E-04	-0.2856556E-04	-0.5285500E-02	-0.4926484E-01	-0.2301630E-01
-0.1462244E-04	-0.3072390E-04	0.7907313E-04	-0.8627201E-03	-0.2315845E-01	0.4840017E-01	0.3668792E-06
0.4435589E-04	0.2726811E-04	0.5240985E-02	0.4942166E-01	0.2277907E-01	0.1250470E-04	0.2912008E-04
-0.7935737E-04	0.2170323E-01	-0.4791919E-01	0.1183794E-02	-0.4253139E-04	-0.2129553E-04	-0.2596815E-04
-0.4807589E-01	-0.2311009E-01	-0.2690658E-02	-0.3175652E-04	0.7645222E-04	-0.1273751E-04	-0.2168706E-01
0.4781398E-01	-0.1202699E-02	0.4230013E-04	0.2092055E-04	0.2240175E-04	0.4803104E-01	0.2300102E-01
0.2646275E-02	0.3237570E-04	-0.7590003E-04	0.9178057E-05	0.2293116E-01	0.2175804E-01	0.2079824E-01
0.1990164E-01	0.1876251E-01	-0.1043125E-00	-0.1006114E-01	-0.9681624E-01	-0.9184938E-01	-0.8518924E-01
0.9775979E-04						

SA-8 RUN #2 MODE 4 XN = 3 378488

0.2245647E-00	0.2071609E-00	0.1923329E-00	0.1770433E-00	0.1637948E-00	0.1586123E-00	0.1498304E-00
0.1420898E-00	0.1348224E-00	0.1311380E-00	0.1261654E-00	0.1216029E-00	0.1163734E-00	0.1073847E-00
0.9984273E-01	0.9133378E-01	0.8547415E-01	0.8034132E-01	0.7735305E-01	0.7475146E-01	0.7213129E-01
0.6972999E-01	0.6681337E-01	-0.	0.6829307E-01	0.6457780E-01	0.6204191E-01	0.5948778E-01
-0.	-0.	-0.7025837E-02	0.5381585E-01	-0.	-0.	-0.
-0.	-0.4775378E-01	-0.5034035E-01	-0.4248341E-01	-0.3936566E-01	-0.	-0.3650138E-01
-0.3269902E-01	-0.2548862E-01	-0.1771054E-01	-0.7463726E-02	0.5452296E-02	0.1852071E-01	0.3070153E-01
0.4106266E-01	0.5117303E-01	-0.5066331E-01	-0.1072458E-00	-0.	-0.1080740E-00	-0.1415025E-00
-0.1576462E-00	-0.1596295E-00	-0.1464641E-00	-0.1209924E-00	-0.8310856E-01	-0.3425745E-01	0.2263083E-01
0.5722175E-01	0.9256874E-02	-0.	0.9317981E-02	-0.2606459E-02	0.6303052E-03	0.6883696E-03
0.9502795E-03	-0.3150059E-02	-0.5699663E-02	-0.4223021E-02	0.1901681E-02	0.5365604E-01	0.1094380E-00
-0.	0.1106045E-00	0.1439965E-00	0.1605635E-00	0.1635215E-00	0.1500744E-00	0.1242129E-00
0.8568228E-01	0.3563329E-01	-0.2244070E-01	-0.5882572E-01	-0.8774338E-02	-0.	-0.1010533E-01
0.3151933E-02	0.6624250E-03	0.2998930E-03	-0.2219333E-03	0.4008532E-02	0.6567539E-02	0.4680795E-02
-0.1422054E-02	-0.5789605E-01	-0.2809038E-01	0.	-0.2789593E-01	-0.1371010E-01	-0.6187757E-02
0.1953801E-02	0.9805439E-02	0.1931987E-01	0.2700868E-01	0.3163183E-01	0.3317282E-01	0.3118178E-01
-0.5302068E-02	0.	-0.5048186E-02	-0.6749693E-02	0.8236465E-02	0.1914766E-01	0.2704856E-01
0.2720817E-01	0.2682196E-01	0.2969008E-01	0.3709651E-01	0.6199155E-01	0.2679849E-01	0.
0.2680723E-01	0.1005499E-01	0.2191285E-02	-0.6049319E-02	-0.1364132E-01	-0.2284857E-01	-0.3002799E-01
-0.3374740E-01	-0.3399057E-01	-0.2464319E-01	0.1054603E-01	0.	0.9964742E-02	0.1237973E-01
-0.2750273E-03	-0.9839193E-02	-0.1778906E-01	-0.1874191E-01	-0.2039063E-01	-0.2574545E-01	-0.3561844E-01
0.9078009E-01	0.8120030E-01	0.7236610E-01	0.6441522E-01	0.5593834E-01	0.5297389E-01	0.4805403E-01
0.4393409E-01	0.3973928E-01	0.3777209E-01	0.3739267E-01	0.3522847E-01	0.3453502E-01	0.3224923E-01
0.3065853E-01	0.2945122E-01	0.3415980E-01	0.2357171E-01	0.2233405E-01	0.2045571E-01	0.1867805E-01
0.1603532E-01	0.1633050E-01	0.	0.1766597E-01	0.1402197E-01	0.1072429E-01	0.7561361E-02
-0.1246665E-04	0.	-0.2097983E-02	0.2124131E-01	0.	0.	0.
0.	0.1107631E-00	0.6978819E-01	0.2590885E-01	-0.2858401E-01	0.	-0.5685083E-01
-0.6987226E-01	-0.5171285E-01	-0.1915583E-01	0.4813361E-02	0.5971344E-02	-0.3078904E-02	-0.5451702E-02
0.1079989E-01	0.1723635E-01	0.3140953E-01	-0.1597168E-02	0.8585629E-15	-0.1463723E-02	-0.8677992E-02
-0.2839562E-02	0.1840027E-02	0.8664219E-02	0.8903244E-02	0.5579873E-02	0.6826631E-03	0.1745792E-02
0.1993553E-01	0.2072404E-01	0.2291906E-15	0.1998054E-01	0.8641820E-02	-0.8893221E-02	-0.2393594E-01
-0.3678342E-01	-0.4415154E-01	-0.4754449E-01	-0.4845918E-01	-0.5095851E-01	-0.4731556E-01	0.1834765E-02
0.8684772E-15	0.1675717E-02	0.1602490E-01	0.1189567E-01	0.6491275E-02	-0.1701519E-02	-0.3331188E-02
-0.1580224E-02	0.1404941E-02	-0.1388653E-02	-0.3602316E-01	-0.2209142E-01	0.2082753E-15	-0.2128114E-01
-0.3420320E-02	0.1517346E-01	0.2932628E-01	0.4117253E-01	0.4756818E-01	0.4988507E-01	0.4957362E-01
0.5088330E-01	-0.4270457E-02	-0.3315398E-01	-0.3061103E-16	-0.3273143E-01	-0.3728097E-01	-0.2586771E-01
-0.1324595E-01	0.1716006E-02	0.1024428E-01	0.1640363E-01	0.2303830E-01	0.3512024E-01	0.4433633E-01
0.3062487E-01	0.9034144E-15	0.3040397E-01	0.2169298E-01	0.1558238E-01	0.7581720E-02	0.9445110E-04
-0.9681056E-02	-0.1922899E-01	-0.2711129E-01	-0.3132062E-01	-0.1059305E-01	0.2607182E-01	0.1501509E-14
0.2578271E-01	0.3402094E-01	0.2244821E-01	0.7775538E-02	-0.8880504E-02	-0.1757652E-01	-0.2250714E-01
-0.2716338E-01	-0.3714479E-01	-0.5739683E-01	-0.2456371E-01	-0.6940067E-14	-0.2482918E-01	-0.1774975E-01
-0.1650077E-01	-0.1039144E-01	-0.1740023E-02	0.9777725E-02	0.2022768E-01	0.2798866E-01	0.3145721E-01
-0.1375605E-03	-0.7991040E-04	-0.2083506E-04	-0.2083447E-04	-0.7292386E-03	0.5752287E-04	0.7353657E-02
0.7104968E-02	-0.1901940E-02	-0.2497241E-02	-0.6838901E-02	-0.6522314E-02	0.1177607E-02	0.1864499E-02
0.9412193E-02	0.5627089E-02	-0.1885913E-01	0.3114767E-03	-0.8895239E-02	-0.5476747E-02	0.1937889E-01
-0.3630639E-03	0.5527283E-04	0.1947077E-03	-0.6494136E-04	-0.3801517E-05	0.1972281E-01	0.5909816E-01
0.2805722E-01	-0.5002793E-04	-0.7041317E-04	-0.3436617E-04	0.1003207E-01	0.2943355E-01	-0.5292556E-01
-0.1481107E-03	-0.1501892E-03	0.6492319E-04	-0.1937321E-01	-0.5802885E-01	-0.2924013E-01	0.4035641E-04
0.5607504E-04	0.2299465E-04	-0.1073343E-01	-0.2865944E-01	0.5165400E-01	0.1409984E-03	0.1381944E-03
-0.5652599E-04	0.5488438E-01	0.3409766E-01	0.4259148E-02	0.2839552E-03	-0.1272695E-03	-0.8568847E-04
0.3196097E-01	-0.5596047E-01	0.1013182E-02	-0.1550214E-03	0.1461622E-03	-0.6711788E-04	-0.5440062E-01
-0.3454771E-01	-0.4051613E-02	-0.2878931E-03	0.1255523E-03	0.6828822E-04	-0.3210270E-01	0.5541731E-01
-0.7766520E-03	0.1582228E-03	-0.1532731E-03	0.5255382E-04	0.1233679E-00	0.1166718E-00	0.1113426E-00
0.1065291E-00	0.1008644E-00	0.7515386E-02	0.7238016E-02	0.5850410E-02	0.5948306E-02	0.7625370E-02
-0.1215543E-03						

SA-8 RUN #2 MODE 5 XN = 3.265856

0.9584050E-02	0.9075870E-02	0.8033763E-02	0.7441551E-02	0.6121601E-02	0.5421612E-02	0.4972420E-02
0.4024370E-02	0.2490178E-02	0.1700388E-02	0.2733609E-02	0.3807768E-02	0.5289928E-02	0.7776012E-02
0.1053152E-01	0.1281145E-01	0.1450438E-01	0.1613965E-01	0.1663633E-01	0.1728176E-01	0.1689123E-01
0.1646601E-01	0.1413091E-01	0.	0.1498729E-01	0.1357539E-01	0.1168755E-01	0.9478538E-02
0.	0.	-0.7693941E-03	0.6456630E-02	0.	0.	0.
0.	-0.2199041E-01	-0.2301547E-01	-0.1889242E-01	-0.1828821E-01	0.	-0.1782076E-01
-0.1747132E-01	-0.1765262E-01	-0.1839390E-01	-0.1878517E-01	-0.1708713E-01	-0.1279715E-01	-0.7213530E-02
-0.1158353E-02	0.2067235E-02	0.5400152E-01	0.5774729E-02	0.	0.7147335E-02	0.3870552E-02
0.1855230E-01	0.2576242E-01	0.3003401E-01	0.2588353E-01	0.2112774E-01	0.1934171E-01	0.2347450E-01
0.1670064E-00	0.1261956E-01	0.	0.1337566E-01	-0.1521683E-01	0.8431851E-02	0.1887757E-01
0.2803253E-01	0.1981363E-01	0.1476997E-01	0.2156384E-01	0.4304790E-01	-0.4533084E-01	-0.3327397E-02
0.	-0.3593273E-02	-0.3125360E-02	-0.1824904E-01	-0.2291970E-01	-0.2803334E-01	-0.2409697E-01
-0.1957265E-01	-0.1923671E-01	-0.2430861E-01	-0.1731113E-00	-0.1267129E-01	0.	-0.1798718E-01
0.1417492E-01	-0.7717792E-02	-0.1970010E-01	-0.2977154E-01	-0.2068285E-01	-0.1484644E-01	-0.2204873E-01
-0.4222794E-01	-0.8012636E-01	-0.4681246E-02	-0.	-0.5235087E-02	0.1526771E-01	0.1041915E-01
0.7452896E-02	0.4791600E-02	0.9495312E-02	0.1036786E-01	0.3425141E-02	-0.1207225E-01	0.1593190E-00
-0.2561817E-01	-0.	-0.2669661E-01	-0.8168523E-01	-0.7169705E-01	-0.6467655E-01	-0.5425799E-01
-0.5753795E-01	-0.5032231E-01	-0.2161464E-01	0.2935491E-01	0.9759248E-01	0.7537950E-02	-0.
0.8960412E-02	-0.1699900E-01	-0.1065875E-01	-0.6748236E-02	-0.3299505E-02	-0.8406829E-02	-0.1018442E-01
-0.3753648E-02	0.1199605E-01	-0.1439948E-00	0.2026798E-01	-0.	0.1966237E-01	0.6401157E-01
0.5221711E-01	0.4471568E-01	0.3415276E-01	0.3983366E-01	0.3520007E-01	0.1113722E-01	-0.3287581E-01
0.2072393E-00	0.1834656E-00	0.1606376E-00	0.1412241E-00	0.1184380E-00	0.1106765E-00	0.9813814E-01
0.8759474E-01	0.7629835E-01	0.7109152E-01	0.7212372E-01	0.6655375E-01	0.6653402E-01	0.6254410E-01
0.6039858E-01	0.5992659E-01	0.8113468E-01	0.4395512E-01	0.4081947E-01	0.3524896E-01	0.2992735E-01
0.2142638E-01	0.2336220E-01	-0.	0.2761759E-01	0.1598514E-01	0.5053339E-02	-0.5415941E-02
0.7263908E-04	-0.	-0.3846185E-02	0.4502549E-01	-0.	-0.	-0.
-0.	0.4086276E-00	0.2641354E-00	0.1055466E-00	-0.8905775E-01	-0.	-0.1905094E-00
-0.2383786E-00	-0.1776712E-00	-0.6657347E-01	0.1321522E-01	0.1228080E-01	-0.2415148E-01	-0.3728764E-01
0.1422680E-01	0.3135041E-01	0.8091363E-01	-0.2952101E-01	0.2781688E-14	-0.2885731E-01	-0.4895407E-01
-0.2312809E-01	-0.1026768E-02	0.2961578E-01	0.3832961E-01	0.3528785E-01	0.2640724E-01	0.3695583E-01
-0.4298942E-01	0.1043113E-01	0.8284721E-15	0.9717794E-02	0.1656011E-01	-0.1452304E-03	-0.1345235E-01
-0.2700378E-01	-0.2888922E-01	-0.2466542E-01	-0.1862677E-01	-0.2247581E-01	-0.1282730E-00	0.2320141E-01
0.2719135E-14	0.2190205E-01	0.5405313E-01	0.2455057E-01	-0.4890764E-02	-0.4036215E-01	-0.5003320E-01
-0.4572894E-01	-0.3540123E-01	-0.4441323E-01	-0.2355462E-02	-0.1496975E-01	0.9899676E-15	-0.1440029E-01
-0.7697380E-02	0.5412884E-02	0.1150106E-01	0.2064565E-01	0.2093357E-01	0.1676150E-01	0.1130906E-01
0.1564025E-01	0.6787347E-01	-0.3626974E-01	0.1187400E-16	-0.3519965E-01	-0.5916804E-01	-0.3385993E-01
-0.1045343E-01	0.1813637E-01	0.2287331E-01	0.2023448E-01	0.2147362E-01	0.4447385E-01	0.3374221E-01
-0.6566030E-02	0.2982327E-14	-0.6428934E-02	-0.1985587E-01	-0.1587804E-01	-0.1249886E-01	-0.4452133E-02
-0.3280441E-02	-0.2683675E-02	0.3672555E-03	0.1207463E-01	-0.1047093E-00	0.2782697E-01	0.5057708E-14
0.2730690E-01	0.6575219E-01	0.4091329E-01	0.1013325E-01	-0.2615948E-01	-0.3491559E-01	-0.3276256E-01
-0.3255241E-01	-0.5349963E-01	-0.6081797E-01	0.4799418E-01	-0.2222834E-13	0.4615064E-01	0.5429647E-01
0.3292340E-01	0.2129396E-01	0.1420642E-01	0.1479242E-01	0.1239510E-01	0.4063676E-02	-0.1442937E-01
-0.2286175E-03	-0.3415127E-04	0.1665383E-03	0.1665404E-03	-0.2703878E-02	0.1056536E-03	-0.3338254E-03
-0.1191216E-02	0.1369711E-03	-0.2001074E-02	0.1795655E-02	0.2887817E-02	-0.2415148E-02	0.4792077E-04
0.2244802E-01	0.2496472E-02	-0.7249021E-01	-0.8499213E-02	-0.2088783E-01	-0.2515067E-02	0.7466023E-01
0.8794686E-02	0.1473849E-03	0.6514459E-03	0.6695052E-05	-0.3874927E-04	0.4768284E-01	0.1506482E-01
0.6454108E-01	-0.2123652E-03	-0.2778118E-03	0.1538797E-03	0.4383657E-01	0.7321126E-01	0.3705281E-02
-0.5498528E-03	-0.3431932E-03	0.2667159E-03	-0.4465622E-01	-0.8629447E-02	-0.7145246E-01	0.1267561E-03
0.2542272E-03	-0.2084927E-03	-0.4483829E-01	-0.6754763E-01	-0.1144326E-01	0.4719440E-03	0.3063748E-03
-0.2578657E-03	0.3839929E-02	0.8540508E-01	0.3017533E-02	0.9401716E-03	-0.1754403E-03	-0.3797432E-03
0.8540260E-01	-0.7059061E-02	0.1932165E-02	-0.2210642E-03	0.4874793E-03	-0.1433836E-03	-0.3621554E-02
-0.8909643E-01	-0.2780739E-02	-0.9532018E-03	0.1847782E-03	0.2645130E-03	-0.8659909E-01	0.3445346E-02
-0.1717494E-02	0.2494039E-03	-0.4954918E-03	0.4024675E-04	0.1882238E-01	0.1760747E-01	0.1742307E-01
0.1944212E-01	0.2321627E-01	0.6291432E-01	0.6049019E-01	0.5382567E-01	0.5180780E-01	0.5452758E-01
-0.1663096E-03						

SA-8 RUN #2 MODE 6 XN = 3.204805

0.2508104E-00	0.2303501E-00	0.2131999E-00	0.1953085E-00	0.1801720E-00	0.1743561E-00	0.1641441E-00
0.1554065E-00	0.1475062E-00	0.1435114E-00	0.1371821E-00	0.1313656E-00	0.1245683E-00	0.1129137E-00
0.1028381E-00	0.9184179E-01	0.8421400E-01	0.7743854E-01	0.7370802E-01	0.7036221E-01	0.6745472E-01
0.6481723E-01	0.6244896E-01	-0.	0.6380921E-01	0.6006212E-01	0.5791676E-01	0.5589277E-01
-0.	-0.	-0.6311736E-02	0.5063921E-01	-0.	-0.	-0.
-0.	-0.4874380E-01	-0.5047899E-01	-0.4518254E-01	-0.4254315E-01	-0.	-0.4006261E-01
-0.3662023E-01	-0.2959434E-01	-0.2153655E-01	-0.1078059E-01	0.2398103E-02	0.1516144E-01	0.2676800E-01
0.3649373E-01	0.4728171E-01	-0.3189501E-01	0.7839550E-02	-0.	0.8830894E-02	0.3832646E-01
0.6075613E-01	0.7608125E-01	0.8298880E-01	0.8266891E-01	0.7494461E-01	0.6057855E-01	0.4138797E-01
0.7053318E-02	0.5980224E-02	-0.	0.5256289E-02	-0.7607929E-02	-0.2401753E-01	-0.3527939E-01
-0.4250263E-01	-0.4408982E-01	-0.4245154E-01	-0.3891790E-01	-0.3484495E-01	0.3029298E-01	-0.9812228E-02
-0.	-0.1096791E-01	-0.4102485E-01	-0.6404536E-01	-0.7996085E-01	-0.8672591E-01	-0.8602583E-01
-0.7765933E-01	-0.6228545E-01	-0.4200300E-01	-0.6030983E-02	-0.4742905E-02	-0.	-0.3456612E-02
0.9767548E-02	0.2656399E-01	0.3830117E-01	0.4562510E-01	0.4683466E-01	0.4459004E-01	0.4039400E-01
0.3533607E-01	-0.5792641E-01	-0.8664939E-01	0.	-0.8712115E-01	-0.1039898E-00	-0.1112390E-00
-0.1092395E-00	-0.9759959E-01	-0.7752002E-01	-0.4923121E-01	-0.1415084E-01	0.2534785E-01	-0.3393771E-01
-0.3233608E-01	0.	-0.3280784E-01	-0.4212511E-01	-0.5446776E-01	-0.6020485E-01	-0.5989174E-01
-0.5179040E-01	-0.3921682E-01	-0.2437156E-01	-0.9108047E-02	0.5695326E-01	0.8917305E-01	0.
0.8959768E-01	0.1085928E-00	0.1168429E-00	0.1153810E-00	0.1036909E-00	0.8309711E-01	0.5381294E-01
0.1727056E-01	-0.2403065E-01	0.1961609E-01	-0.3115870E-02	0.	-0.3194907E-02	-0.1184843E-01
-0.1380540E-01	-0.1537636E-01	-0.1533322E-01	-0.1590463E-01	-0.1432969E-01	-0.9915386E-02	-0.2900053E-02
-0.8596772E-01	-0.7926704E-01	-0.7326232E-01	-0.6748257E-01	-0.6176156E-01	-0.5963759E-01	-0.5611717E-01
-0.5302911E-01	-0.4995134E-01	-0.4842785E-01	-0.4697295E-01	-0.4482904E-01	-0.4304510E-01	-0.3950098E-01
-0.3659455E-01	-0.3358021E-01	-0.3264216E-01	-0.2785374E-01	-0.2646192E-01	-0.2487537E-01	-0.2342183E-01
-0.2166799E-01	-0.2112673E-01	0.	-0.2204227E-01	-0.1956623E-01	-0.1761718E-01	-0.1575805E-01
-0.4991862E-04	0.	0.2069292E-02	-0.1993993E-01	0.	0.	0.
0.	-0.3127851E-01	-0.1358958E-01	0.2141808E-02	0.2356325E-01	0.	0.3430115E-01
0.3855449E-01	0.2928185E-01	0.1415433E-01	0.1788266E-02	-0.2440693E-02	-0.2593283E-02	-0.4613049E-02
-0.1244745E-01	-0.1697257E-01	0.1881696E-01	0.2410243E-01	-0.2765030E-15	0.2376054E-01	0.1937709E-01
0.9915174E-02	0.1109736E-02	-0.8453702E-02	-0.1543269E-01	-0.2066844E-01	-0.2433787E-01	-0.2888251E-01
0.4038163E-01	0.2603122E-01	-0.8914624E-16	0.2575825E-01	0.1656807E-01	0.9258735E-02	0.1435866E-02
-0.5708404E-02	-0.1326877E-01	-0.2022240E-01	-0.2591271E-01	-0.2915428E-01	-0.1719024E-01	-0.2219438E-01
-0.2698085E-15	-0.2161302E-01	-0.1451152E-01	-0.1630113E-02	0.9446799E-02	0.1950627E-01	0.2535110E-01
0.2837723E-01	0.2948304E-01	0.3174813E-01	-0.3853017E-01	-0.2374643E-01	-0.8176511E-16	-0.2328834E-01
-0.1139233E-01	-0.4780543E-03	0.9817283E-02	0.1761451E-01	0.2424886E-01	0.2915200E-01	0.3222292E-01
0.3292567E-01	-0.1606244E-01	-0.4813758E-02	0.8538892E-17	-0.4931804E-02	-0.2221880E-02	-0.3968408E-02
-0.4448670E-02	-0.5096928E-02	-0.3087099E-02	-0.5665984E-03	0.1197992E-02	0.3304672E-03	0.4666455E-01
0.4887570E-01	-0.3049644E-15	0.4856329E-01	0.4451991E-01	0.3550323E-01	0.2414367E-01	0.1086397E-01
-0.2393201E-02	-0.1533696E-01	-0.2740539E-01	-0.3878069E-01	0.1465101E-01	-0.2393100E-03	-0.5194669E-15
-0.2204877E-03	-0.5275446E-02	-0.4183024E-02	-0.3043504E-02	-0.1060852E-02	-0.1437778E-02	-0.2104497E-02
-0.1873636E-02	0.9181239E-03	-0.5034946E-01	-0.6052306E-01	0.2191932E-14	-0.6001322E-01	-0.5537109E-01
-0.4418826E-01	-0.3129252E-01	-0.1701683E-01	-0.2469746E-02	0.1231837E-01	0.2653344E-01	0.3997486E-01
-0.8905317E-04	-0.1066707E-03	-0.1255588E-03	-0.1255591E-03	0.3488046E-03	0.1465960E-04	0.7132506E-02
0.7226385E-02	-0.5904308E-02	-0.5640822E-02	-0.7046520E-02	-0.7166101E-02	0.5967987E-02	0.5666116E-02
0.1530938E-02	0.6580252E-02	0.8587836E-02	0.1768902E-02	-0.1818787E-02	-0.6701046E-02	-0.8740167E-02
-0.1627480E-02	0.1434272E-04	-0.9563978E-04	-0.8071448E-04	0.1204523E-04	0.2723896E-03	0.5063111E-01
-0.2062564E-01	0.3522317E-04	0.2084814E-04	-0.1023401E-03	-0.1154858E-01	-0.2325164E-01	-0.5253486E-01
0.6938848E-04	-0.4308303E-04	-0.3651133E-06	-0.8585056E-03	-0.5209300E-01	0.2241315E-01	-0.1088706E-04
-0.1722538E-04	0.1094121E-03	0.1072409E-01	0.2176788E-01	0.5422744E-01	-0.4374634E-04	0.3710792E-04
0.1141976E-04	0.5039061E-01	-0.2292051E-01	0.3749089E-02	-0.1256318E-03	-0.7072723E-04	0.5497216E-04
-0.2498498E-01	-0.5062413E-01	-0.1414920E-02	-0.7864946E-04	-0.2661258E-05	-0.8143023E-05	-0.4986239E-01
0.2364205E-01	-0.3500053E-02	0.1126414E-03	0.6257864E-04	-0.2580887E-04	0.2536607E-01	0.5183863E-01
0.1483922E-02	0.8388431E-04	-0.1678954E-05	0.3504798E-04	0.1148253E-00	0.1081378E-00	0.1024924E-00
0.9648348E-01	0.8886738E-01	-0.7081814E-01	-0.6793133E-01	-0.6440058E-01	-0.6065440E-01	-0.5632370E-01
-0.9901684E-04						

0.1832476E-02	0.2547769E-02	0.3263791E-02	0.3873565E-02	0.4528940E-02	0.4806994E-02	0.5139724E-02
0.5507618E-02	0.5955135E-02	0.6171140E-02	0.5918496E-02	0.5665024E-02	0.5286117E-02	0.4639540E-02
0.3937725E-02	0.3318255E-02	0.2859944E-02	0.2430915E-02	0.2266634E-02	0.2068914E-02	0.2097404E-02
0.2133539E-02	0.2570853E-02	0.	0.2416589E-02	0.2635353E-02	0.2991396E-02	0.3417469E-02
0.	0.	-0.3954943E-03	0.3921539E-02	0.	0.	0.
0.	0.2256005E-02	0.1948808E-02	0.2380344E-02	0.2727929E-02	0.	0.3056867E-02
0.3534862E-02	0.4541016E-02	0.5574113E-02	0.6512624E-02	0.6792740E-02	0.6153638E-02	0.5045760E-02
0.3750194E-02	0.3656688E-02	-0.1674582E-01	-0.3715967E-02	0.	-0.3929830E-02	-0.1063122E-02
-0.2355760E-02	-0.2305937E-02	-0.1965584E-02	-0.9338657E-04	0.1529454E-02	0.2108563E-02	0.1102437E-02
-0.4265812E-01	-0.6822553E-02	0.	-0.6921686E-02	0.1058024E-02	-0.2596353E-02	-0.3458494E-02
-0.4087209E-02	-0.9915249E-03	0.1164674E-02	0.3813234E-03	-0.3899102E-02	0.1414580E-01	-0.7830107E-03
0.	-0.9103038E-03	-0.5776102E-02	-0.6306992E-02	-0.7849290E-02	-0.7927045E-02	-0.8728453E-02
-0.8445176E-02	-0.6170220E-02	-0.1987486E-02	0.4432661E-01	0.6089357E-02	0.	0.7148682E-02
-0.2520696E-02	0.4094812E-04	0.8461531E-03	0.1610435E-02	-0.1439721E-02	-0.3266128E-02	-0.1667571E-02
0.3196565E-02	0.6468937E-01	0.1355233E-00	-0.	0.1384191E-00	0.2052536E-00	0.2604326E-00
0.2886025E-00	0.2879134E-00	0.2577013E-00	0.2035875E-00	0.1313961E-00	0.4896631E-01	-0.3730655E-01
0.1790890E-01	-0.	0.1862112E-01	0.4285824E-01	0.5032588E-01	0.5464385E-01	0.5412921E-01
0.5260466E-01	0.4495791E-01	0.2931601E-01	0.6683594E-02	0.2566234E-01	0.1351499E-00	-0.
0.1376881E-00	0.2166288E-00	0.2707719E-00	0.2982147E-00	0.2964127E-00	0.2679298E-00	0.2132415E-00
0.1362123E-00	0.4450127E-01	0.5259447E-01	0.3765914E-01	-0.	0.3844728E-01	0.4566891E-01
0.6058724E-01	0.6739072E-01	0.6713264E-01	0.5586453E-01	0.4049371E-01	0.2449423E-01	0.9967942E-02
-0.1254984E-01	-0.8786464E-02	-0.5043884E-02	-0.2152005E-02	0.1583732E-02	0.2767518E-02	0.4650861E-02
0.6128678E-02	0.7770014E-02	0.8459538E-02	0.7379126E-02	0.7776820E-02	0.6785382E-02	0.5927436E-02
0.4888188E-02	0.3314479E-02	-0.3273729E-02	0.4603446E-02	0.4699707E-02	0.5392316E-02	0.6076691E-02
0.7498395E-02	0.6642280E-02	-0.	0.5947003E-02	0.7860982E-02	0.9871316E-02	0.1179621E-01
0.1764217E-04	-0.	-0.2331210E-03	-0.1871392E-03	-0.	-0.	-0.
-0.	-0.9843815E-01	-0.6742513E-01	-0.3107967E-01	0.1218719E-01	-0.	0.3501268E-01
0.4629514E-01	0.3444094E-01	0.1160245E-01	-0.3811036E-02	-0.8141799E-03	0.9866109E-02	0.1480314E-01
0.4396101E-02	0.2010017E-02	-0.2408557E-01	-0.2380130E-02	-0.6242786E-15	-0.2618669E-02	-0.4093850E-03
-0.7732254E-02	-0.1307273E-01	-0.1880725E-01	-0.1819960E-01	-0.1378330E-01	-0.7483621E-02	-0.5747555E-02
0.1795337E-01	0.3818797E-02	-0.1325245E-15	0.3891990E-02	0.2950975E-03	0.2107300E-02	0.3441135E-02
0.5057969E-02	0.4212191E-02	0.2146245E-02	-0.1348009E-03	-0.1661869E-04	0.3324667E-01	-0.8386937E-02
-0.6954800E-15	-0.8345922E-02	-0.2187377E-01	-0.1982966E-01	-0.1543487E-01	-0.7798386E-02	-0.4524251E-02
-0.3478063E-02	-0.3290778E-02	0.1217598E-02	-0.1726761E-02	0.3183311E-02	0.1387792E-15	0.3126330E-02
0.3427783E-02	0.2114974E-02	0.2146311E-02	0.1290817E-02	0.2201747E-02	0.3788044E-02	0.5158786E-02
0.3723985E-02	-0.2166156E-01	0.2247372E-02	0.1201527E-15	0.2083732E-02	0.8759815E-02	0.4629649E-02
0.9059548E-03	-0.3839803E-02	-0.3063351E-02	-0.5006639E-03	0.1087587E-02	-0.2532698E-02	-0.4918542E-02
0.4917097E-02	-0.6149706E-15	0.4950465E-02	0.9153713E-02	0.9277071E-02	0.8883859E-02	0.6763475E-02
0.5511608E-02	0.3931662E-02	0.1616626E-02	-0.2486083E-02	0.3549532E-01	0.6389994E-02	-0.9800298E-15
0.6508029E-02	-0.1909327E-02	0.3434517E-02	0.9457892E-02	0.1563296E-01	0.1443365E-01	0.9758248E-02
0.5062564E-02	0.5366426E-02	0.1622889E-01	-0.8626308E-02	0.5008365E-14	-0.8288738E-02	-0.1137917E-01
-0.7866664E-02	-0.6140481E-02	-0.5062365E-02	-0.5284884E-02	-0.4490324E-02	-0.2128824E-02	0.2517310E-02
0.6080924E-03	0.5608066E-03	0.5126048E-03	0.5126044E-03	0.2836581E-03	-0.7579456E-04	0.1501698E-02
0.1683527E-02	0.1204619E-02	0.1666380E-02	-0.2488343E-02	-0.2718491E-02	-0.4023916E-03	-0.9373525E-03
-0.5324841E-02	-0.1296286E-02	0.1748908E-01	0.4032874E-02	0.3996307E-02	-0.5277706E-03	-0.1683170E-01
-0.2564117E-02	-0.2074445E-03	-0.1303349E-03	-0.1025274E-04	0.4350088E-05	-0.8075186E-02	0.1186046E-02
-0.5076213E-02	0.3982431E-04	0.9029019E-04	-0.5469205E-04	-0.8841565E-02	-0.6632919E-02	-0.5935745E-02
0.1203929E-03	0.4396656E-04	-0.8411565E-04	0.9072022E-02	-0.2222277E-02	0.6400743E-02	-0.3125706E-04
-0.5175295E-04	0.5256593E-04	0.8558734E-02	0.5915520E-02	0.5920439E-02	-0.1097630E-03	-0.8706789E-04
0.7515218E-04	0.3266803E-02	-0.1074001E-01	-0.2739572E-03	-0.2284849E-03	0.3314334E-04	0.6736468E-04
-0.9801277E-02	-0.2290476E-02	-0.2766195E-03	0.7662342E-04	-0.1137138E-03	0.1780441E-04	-0.4263269E-02
0.9986810E-02	0.5430238E-03	0.1811925E-03	-0.3749351E-04	-0.4859975E-04	0.1003717E-01	0.4122703E-02
-0.4858256E-03	-0.2890278E-04	0.1349498E-03	-0.9031224E-05	0.7002851E-02	0.6984075E-02	0.6768908E-02
0.6052304E-02	0.4842934E-02	0.6059812E-02	0.5948979E-02	0.6616833E-02	0.5939352E-02	0.3799804E-02
0.5978105E-03						

SA-8 RUN #2 MODE 8 XN = 2.422205

0.2330943E-00	0.1975629E-00	0.1681247E-00	0.1377479E-00	0.1127455E-00	0.1033998E-00	0.8664519E-01
0.7298895E-01	0.6122214E-01	0.5551596E-01	0.4734791E-01	0.4006754E-01	0.3180195E-01	0.1775741E-01
0.5621124E-02	-0.7417264E-02	-0.1646683E-01	-0.2457756E-01	-0.2896934E-01	-0.3296248E-01	-0.3630866E-01
-0.3935585E-01	-0.4177164E-01	0.	-0.4028792E-01	-0.4452513E-01	-0.4679474E-01	-0.4887416E-01
0.	0.	0.3085369E-02	-0.5456174E-01	0.	0.	0.
0.	0.3837613E-01	0.3686765E-01	0.4016449E-01	0.4137572E-01	0.	0.4243124E-01
0.4370314E-01	0.4541315E-01	0.4576396E-01	0.4373166E-01	0.3778210E-01	0.2886190E-01	0.1855144E-01
0.7709713E-02	-0.4464905E-02	0.2242754E-01	-0.1448452E-03	0.	-0.153316IE-02	-0.2772207E-01
-0.5007579E-01	-0.6144819E-01	-0.6476266E-01	-0.5951850E-01	-0.4777544E-01	-0.3073885E-01	-0.1110843E-01
-0.8189456E-02	-0.2323459E-02	0.	-0.3277173E-02	-0.1884802E-01	-0.3547643E-01	-0.3990721E-01
-0.4071791E-01	-0.3570755E-01	-0.2872750E-01	-0.2052483E-01	-0.1276932E-01	-0.2430687E-01	0.6629893E-03
0.	0.1720305E-02	0.2904959E-01	0.5197458E-01	0.6322076E-01	0.6720623E-01	0.6212785E-01
0.5017132E-01	0.3287914E-01	0.1259810E-01	0.1035541E-01	0.2253461E-02	0.	0.4555045E-02
0.1930605E-01	0.3581067E-01	0.4072147E-01	0.4151720E-01	0.3591142E-01	0.2836908E-01	0.2001424E-01
0.1175420E-01	0.2119252E-01	0.6236618E-04	-0.	0.7916258E-04	-0.8049546E-02	-0.1156980E-01
-0.1514743E-01	-0.1602484E-01	-0.1543382E-01	-0.1202525E-01	-0.6563281E-02	0.5411646E-03	0.2702658E-02
-0.1544779E-01	-0.	-0.1702372E-01	-0.5337947E-01	-0.8935225E-01	-0.1064752E-00	-0.1113160E-00
-0.1014899E-00	-0.8188194E-01	-0.5452165E-01	-0.2339606E-01	-0.2397771E-01	0.7874672E-03	-0.
0.5152914E-03	0.1008560E-01	0.1375761E-01	0.1794890E-01	0.1909617E-01	0.1836086E-01	0.1428852E-01
0.7716774E-02	-0.7818733E-03	-0.7223676E-02	0.1220195E-01	-0.	0.1413067E-01	0.5000111E-01
0.8452877E-01	0.1014700E-00	0.1070647E-00	0.9792476E-01	0.7955080E-01	0.5352669E-01	0.2365938E-01
-0.1853782E-00	-0.1675775E-00	-0.1520096E-00	-0.1372840E-00	-0.1230321E-00	-0.1178346E-00	-0.1097726E-00
-0.1027890E-00	-0.9598686E-01	-0.9268612E-01	-0.8913499E-01	-0.8382776E-01	-0.7936439E-01	-0.7045724E-01
-0.6308112E-01	-0.5542353E-01	-0.5202117E-01	-0.4116857E-01	-0.3768227E-01	-0.3380596E-01	-0.3027125E-01
-0.2605272E-01	-0.2480164E-01	-0.	-0.2694425E-01	-0.2117869E-01	-0.1663770E-01	-0.1238158E-01
-0.7684383E-03	-0.	0.1738377E-02	-0.2308448E-01	-0.	-0.	-0.
-0.	-0.4436648E-01	0.7805984E-02	0.2797629E-01	0.7606920E-01	-0.	0.9931670E-01
0.1077956E-00	0.8813018E-01	0.5933027E-01	0.3659965E-01	0.2366302E-01	0.1374828E-01	0.3852435E-02
-0.4838587E-02	-0.1184173E-01	-0.9395791E-02	0.5477061E-01	-0.3223454E-15	0.5621066E-01	0.9685324E-01
0.1236696E-00	0.1397737E-00	0.1364011E-00	0.1206087E-00	0.9395805E-01	0.6322951E-01	0.3237261E-01
-0.8109266E-01	-0.6045989E-01	-0.5541548E-15	-0.5914174E-01	-0.3222445E-01	-0.5374806E-02	0.1350384E-01
0.2701935E-01	0.3334661E-01	0.3427360E-01	0.3084203E-01	0.2717105E-01	-0.5125201E-01	-0.5027667E-01
0.4429571E-15	-0.4881046E-01	-0.2749895E-01	-0.1930744E-02	0.1400970E-01	0.2764727E-01	0.3452744E-01
0.3741510E-01	0.3555097E-01	0.3335957E-01	0.1075370E-01	0.3696861E-01	-0.1759310E-14	0.3780949E-01
0.5886374E-01	0.7586436E-01	0.8708648E-01	0.8786615E-01	0.8150178E-01	0.6864800E-01	0.5193858E-01
0.3317508E-01	-0.7544426E-02	0.1414181E-02	-0.3498942E-15	0.7849446E-03	-0.3014727E-02	-0.4178556E-02
0.6974683E-02	0.1860792E-01	0.3025149E-01	0.3527706E-01	0.3310502E-01	0.2356278E-01	-0.7196724E-01
-0.7234966E-01	-0.3565058E-15	-0.7281180E-01	-0.7854885E-01	-0.8103622E-01	-0.7422277E-01	-0.6183932E-01
-0.4408646E-01	-0.2453264E-01	-0.5219540E-02	0.1108428E-01	-0.9426561E-01	-0.1124984E-00	-0.1028398E-14
-0.1117938E-00	-0.1086178E-00	-0.9802704E-01	-0.9164355E-01	-0.8013271E-01	-0.6521529E-01	-0.4258515E-01
-0.1475767E-01	0.1571561E-01	-0.3414355E-01	-0.5588311E-01	0.8981909E-15	-0.5513938E-01	-0.5207424E-01
-0.4588150E-01	-0.4204372E-01	-0.3419094E-01	-0.2232978E-01	-0.6823516E-02	0.8709712E-02	0.2229527E-01
-0.7102990E-03	-0.6661405E-03	-0.6345689E-03	-0.6345696E-03	0.3787719E-03	0.2231832E-03	-0.1245570E-01
-0.1211558E-01	-0.5363761E-02	-0.4597038E-02	0.1046512E-01	0.1009819E-01	0.7869660E-02	0.6973101E-02
-0.6267661E-02	-0.2541402E-02	0.7506270E-02	-0.9117950E-02	0.6997040E-02	0.4340399E-02	-0.8845076E-02
0.7652701E-02	0.1418998E-03	-0.2023091E-03	0.8357003E-04	0.2608739E-03	-0.2793446E-01	-0.2616846E-01
0.5297646E-02	0.3374117E-03	-0.2559170E-04	0.1076553E-03	-0.1404709E-01	-0.2629550E-01	0.2301350E-01
0.3352303E-03	0.8036022E-04	0.1074384E-03	0.1599587E-01	-0.6279110E-02	0.2873676E-01	0.2004621E-03
-0.6346101E-04	0.3987152E-04	0.8697887E-02	-0.4529114E-02	0.1455914E-01	0.2029038E-03	-0.9389063E-04
-0.3855059E-04	-0.2441600E-02	-0.2152831E-02	-0.2822793E-02	-0.9099447E-04	-0.3144569E-04	0.3749441E-03
-0.1652349E-01	0.1984817E-01	-0.2014651E-02	0.1336252E-03	0.2625860E-05	0.2887954E-03	0.9051417E-02
0.2381902E-01	0.5223218E-02	0.9291098E-04	-0.6944276E-04	0.2363012E-03	0.2197977E-01	0.8828830E-03
0.4172885E-02	-0.2320164E-03	-0.5030272E-04	0.2456420E-03	0.1670892E-01	0.8951973E-02	0.2676704E-02
-0.3924175E-02	-0.1207584E-01	-0.8688751E-01	-0.8066174E-01	-0.7368257E-01	-0.6673153E-01	-0.5872870E-01
-0.7857643E-03						

SA-8 RUN #2 MODE 9 XN = 2.415563

0.1696479E-01	0.1515011E-01	0.1365650E-01	0.1207[illegible]E-01	0.1076893E-01	0.1027545E-01	0.9373537E-02
0.8624786E-02	0.7974942E-02	0.7644389E-02	0.7013[illegible]E-02	0.6431647E-02	0.5738388E-02	0.4552223E-02
0.3498902E-02	0.2382777E-02	0.1602667E-02	0.902[illegible]E-03	0.5306459E-03	0.1833227E-03	-0.7976752E-04
-0.3200718E-03	-0.4559290E-03	0.	-0.3584[illegible]E-03	-0.6715248E-03	-0.8058905E-03	-0.9170719E-03
0.	0.	-0.1604704E-04	-0.1313[illegible]E-02	0.	0.	0.
0.	0.1312440E-02	0.1063194E-02	0.1656[illegible]E-02	0.1919498E-02	0.	0.2160156E-02
0.2479745E-02	0.3058779E-02	0.3566530E-02	0.3955076E-02	0.3962100E-02	0.3491102E-02	0.2746361E-02
0.1845615E-02	0.1234161E-02	-0.2062564E-01	0.7214796E-03	0.	0.1261538E-02	0.1713909E-01
0.2893499E-01	0.3641571E-01	0.3905868E-01	0.3738889E-01	0.3139596E-01	0.2154343E-01	0.8942673E-02
-0.5348365E-01	-0.4787699E-02	0.	-0.3490363E-02	0.3200397E-01	0.5812750E-01	0.7490296E-01
0.8109797E-01	0.7796787E-01	0.6527158E-01	0.4393511E-01	0.1655774E-01	0.2017267E-01	-0.9356677E-03
0.	-0.1542085E-02	-0.1733928E-01	-0.2916[illegible]E-01	-0.3681539E-01	-0.3940056E-01	-0.3766979E-01
-0.3157909E-01	-0.2153052E-01	-0.8745399E-02	0.5388452E-01	0.5034959E-02	0.	0.3999606E-02
-0.3155996E-01	-0.5770450E-01	-0.7436193E-01	-0.8053[illegible]E-01	-0.7753199E-01	-0.6501324E-01	-0.4382623E-01
-0.1672070E-01	0.1838732E-01	-0.1030790E-01	-0.	-0.1109548E-01	-0.3292705E-01	-0.4940404E-01
-0.5944954E-01	-0.6231309E-01	-0.5836150E-01	-0.4767743E-01	-0.3103338E-01	-0.1061116E-01	-0.4767486E-01
0.1352907E-01	-0.	0.1530334E-01	0.6165398E-01	0.9660352E-01	0.1186151E-00	0.1258935E-00
0.1193035E-00	0.9870291E-01	0.6581013E-01	0.2473[illegible]E-01	-0.1894075E-01	0.1103528E-01	-0.
0.1179074E-01	0.3431816E-01	0.5100587E-01	0.6113[illegible]E-01	0.6393126E-01	0.5982700E-01	0.4882057E-01
0.3183748E-01	0.1089879E-01	0.4666013E-01	-0.1373633E-01	-0.	-0.1542895E-01	-0.6145686E-01
-0.9650440E-01	-0.1185965E-00	-0.1258646E-00	-0.1192342E-00	-0.9863199E-01	-0.6572343E-01	-0.2472726E-01
0.2353737E-00	0.2162396E-00	0.2002013E-00	0.1831765E-00	0.1688550E-00	0.1632141E-00	0.1533582E-00
0.1446958E-00	0.1367361E-00	0.1326162E-00	0.1256321E-00	0.1194665E-00	0.1118373E-00	0.9893077E-01
0.8776010E-01	0.7535731E-01	0.5962808E-01	0.5988786E-01	0.5581743E-01	0.5235983E-01	0.4926326E-01
0.4665630E-01	0.4365062E-01	-0.	0.4509109E-01	0.4126512E-01	0.3917381E-01	0.3715894E-01
-0.1881624E-04	-0.	-0.2417031E-02	0.2833330E-01	-0.	-0.	-0.
-0.	-0.9418151E-01	-0.8490502E-01	-0.7862952E-01	-0.6820244E-01	-0.	-0.6267373E-01
-0.5976377E-01	-0.6141017E-01	-0.6398824E-01	-0.6137772E-01	-0.4946057E-01	-0.3272026E-01	-0.1607548E-01
-0.2855765E-02	0.1619126E-01	-0.7800362E-01	-0.8580296E-01	-0.4737763E-15	-0.8612512E-01	-0.9370332E-01
-0.9725461E-01	-0.9263502E-01	-0.8106489E-01	-0.6269521E-01	-0.4063216E-01	-0.1877789E-01	-0.2601479E-02
0.3161595E-01	0.3426597E-01	-0.9986989E-16	0.3442149E-01	0.3751366E-01	0.3919655E-01	0.3744137E-01
0.3269284E-01	0.2504125E-01	0.1588892E-01	0.6982052E-02	0.6630592E-03	0.7889736E-01	0.8566091E-01
-0.5122828E-15	0.8607029E-01	0.9400875E-01	0.9866345E-01	0.9512680E-01	0.8419989E-01	0.6595418E-01
0.4361481E-01	0.2125987E-01	0.4515236E-02	-0.3052941E-01	-0.3414933E-01	-0.1227745E-15	-0.3425691E-01
-0.3700819E-01	-0.3758960E-01	-0.3477574E-01	-0.2943136E-01	-0.2167752E-01	-0.1281195E-01	-0.4430385E-02
0.1295023E-02	-0.7118066E-01	-0.6813327E-01	0.1582567E-16	-0.6825864E-01	-0.6868710E-01	-0.6935651E-01
-0.6609644E-01	-0.5884999E-01	-0.4651928E-01	-0.3128579E-01	-0.1575023E-01	-0.3081656E-02	-0.3007853E-01
-0.2870109E-01	-0.5083920E-15	-0.2872895E-01	-0.2847110E-01	-0.2822092E-01	-0.2651175E-01	-0.2345359E-01
-0.1864045E-01	-0.1285609E-01	-0.6955690E-02	-0.2031263E-02	0.7125202E-01	0.6692943E-01	-0.7832044E-15
0.6705029E-01	0.6714439E-01	0.6844441E-01	0.6633391E-01	0.6020555E-01	0.4862307E-01	0.3369127E-01
0.1807687E-01	0.5093295E-02	0.2888999E-01	0.2294313E-01	0.4378758E-14	0.2304636E-01	0.2236693E-01
0.2267275E-01	0.2145167E-01	0.1891549E-01	0.1475164E-01	0.1021530E-01	0.5922576E-02	0.2635142E-02
0.4865933E-04	0.3658506E-04	0.2438358E-04	0.2438349E-04	0.1372921E-03	-0.1151023E-04	0.5556661E-02
0.5591133E-02	0.1366495E-01	0.1375283E-01	-0.6016319E-02	-0.6059484E-02	-0.1318126E-01	-0.1328418E-01
-0.4154464E-02	-0.5259703E-02	0.1044346E-01	0.1232901E-01	0.4045274E-02	0.5232058E-02	-0.1052923E-01
-0.1233001E-01	-0.1304079E-04	0.1163990E-03	0.7893943E-06	0.9009872E-05	0.6595839E-02	-0.3278679E-04
0.2281539E-01	0.1767605E-04	0.1682984E-03	0.5796335E-05	0.9732810E-02	0.2175522E-01	-0.1297589E-02
0.4035411E-04	0.1142958E-04	-0.1833239E-03	-0.7272817E-02	-0.1313356E-02	-0.2147433E-01	0.1811457E-05
-0.1670559E-03	0.5834047E-05	-0.9564306E-02	-0.2284649E-01	0.2837046E-02	-0.2252035E-04	-0.8338427E-05
0.1795517E-03	0.1554748E-02	0.2012229E-01	-0.5624441E-03	0.1274111E-03	0.4229517E-05	0.2411621E-04
0.1941268E-01	-0.5638792E-03	0.6779285E-02	0.1409[illegible]E-04	-0.1908212E-03	0.1047223E-04	-0.1593693E-02
-0.1931182E-01	0.5817089E-03	-0.1236524E-03	-0.8176721E-05	0.1213241E-05	-0.1905729E-01	0.1328362E-02
-0.6759925E-02	-0.2081363E-04	0.1920067E-03	0.9829511E-05	0.3135696E-01	0.2887476E-01	0.2675413E-01
0.2443416E-01	0.2151494E-01	0.1111260E-03	0.1054722E-03	0.9952826E-01	0.9157704E-01	0.8080592E-01
0.4609286E-04						

0.1682658E-00	0.1544272E-00	0.1427220E-00	0.1305574E-00	0.1201059E-00	0.1160458E-00	0.1090428E-00
0.1029257E-00	0.9725999E-01	0.9436230E-01	0.9005358E-01	0.8608052E-01	0.8146760E-01	0.7354498E-01
0.6679577E-01	0.5934441E-01	0.5420579E-01	0.4961053E-01	0.4710869E-01	0.4493227E-01	0.4293996E-01
0.4115273E-01	0.3938166E-01	-0.	0.4037934E-01	0.3776929E-01	0.3613838E-01	0.3455161E-01
-0.	-0.	-0.2558150E-02	0.3098417E-01	-0.	-0.	-0.
-0.	-0.6110520E-01	-0.5931219E-01	-0.6263601E-01	-0.6326882E-01	-0.	-0.6373116E-01
-0.6409563E-01	-0.6378112E-01	-0.6179096E-01	-0.5680292E-01	-0.4738478E-01	-0.3486948E-01	-0.2065042E-01
-0.5450644E-02	0.1323657E-01	-0.2375851E-01	0.9203526E-03	-0.	0.1881670E-02	0.2429001E-01
0.4273331E-01	0.5371246E-01	0.5740092E-01	0.5390171E-01	0.4424100E-01	0.2951189E-01	0.1169004E-01
0.4540423E-01	0.3836741E-02	-0.	0.2724921E-02	-0.2753215E-01	-0.5052323E-01	-0.6587109E-01
-0.7155514E-01	-0.6858632E-01	-0.5700550E-01	-0.3797201E-01	-0.1379381E-01	0.2414219E-01	-0.9058533E-03
-0.	-0.1790778E-02	-0.2434652E-01	-0.4282889E-01	-0.5371495E-01	-0.5751694E-01	-0.5407247E-01
-0.4443452E-01	-0.2976372E-01	-0.1194573E-01	-0.4581167E-01	-0.3879336E-02	-0.	-0.3052581E-02
0.2733648E-01	0.5034673E-01	0.6557640E-01	0.7124973E-01	0.6840862E-01	0.5696681E-01	0.3800337E-01
0.1398776E-01	-0.3830207E-01	0.2866258E-01	0.	0.3072495E-01	0.8489677E-01	0.1277453E-00
0.1538629E-00	0.1611247E-00	0.1499623E-00	0.1217898E-00	0.7975998E-01	0.2904815E-01	0.1395866E-01
-0.2482643E-02	0.	-0.2802218E-02	-0.1188994E-01	-0.1739932E-01	-0.2156266E-01	-0.2288604E-01
-0.2202113E-01	-0.1825764E-01	-0.1186193E-01	-0.3525154E-02	0.3902957E-01	-0.2853172E-01	0.
-0.3053709E-01	-0.8486129E-01	-0.1275877E-00	-0.1537139E-00	-0.1609974E-00	-0.1498767E-00	-0.1217331E-00
-0.7970266E-01	-0.2896064E-01	-0.1311032E-01	0.2606202E-02	0.	0.2839159E-02	0.1166216E-01
0.1724684E-01	0.2137640E-01	0.2259497E-01	0.2173622E-01	0.1795020E-01	0.1159423E-01	0.3373332E-02
-0.1328248E-00	-0.1207820E-00	-0.1107879E-00	-0.1001167E-00	-0.9141292E-01	-0.8799785E-01	-0.8188880E-01
-0.7663764E-01	-0.7194307E-01	-0.6953710E-01	-0.6553262E-01	-0.6222581E-01	-0.5799120E-01	-0.5097695E-01
-0.4490481E-01	-0.3813215E-01	-0.2904866E-01	-0.3011405E-01	-0.2798996E-01	-0.2626174E-01	-0.2472158E-01
-0.2353336E-01	-0.2183958E-01	0.	-0.2251372E-01	-0.2071717E-01	-0.1985254E-01	-0.1900295E-01
0.8836431E-04	0.	0.1096337E-02	-0.1270166E-01	0.	0.	0.
0.	0.5801192E-01	0.4694911E-01	0.4306204E-01	0.3300472E-01	0.	0.2804631E-01
0.2602312E-01	0.2926699E-01	0.3352421E-01	0.3421482E-01	0.2904639E-01	0.2088588E-01	0.1217365E-01
0.4011448E-02	-0.7275411E-02	0.7117426E-01	0.7697038E-01	0.2784007E-15	0.7713776E-01	0.8181207E-01
0.8179580E-01	0.7444896E-01	0.6223571E-01	0.4583036E-01	0.2792973E-01	0.1119391E-01	-0.6157778E-03
0.4947485E-01	0.6087390E-01	0.1179062E-15	0.6098707E-01	0.6630161E-01	0.6598569E-01	0.6061304E-01
0.5042394E-01	0.3740137E-01	0.2306495E-01	0.9581120E-02	-0.1189626E-02	-0.6513718E-01	-0.7696882E-01
0.1876490E-15	-0.7749775E-01	-0.8873345E-01	-0.9471641E-01	-0.9127619E-01	-0.8054643E-01	-0.6342583E-01
-0.4310617E-01	-0.2290925E-01	-0.7491179E-02	-0.4252697E-01	-0.5804686E-01	0.2733251E-15	-0.5841047E-01
-0.6881044E-01	-0.7358177E-01	-0.7189693E-01	-0.6357659E-01	-0.5076634E-01	-0.3524868E-01	-0.1960593E-01
-0.6342779E-02	0.2071450E-01	0.1865300E-01	0.2798416E-13	0.1880178E-01	0.1970722E-01	0.2034475E-01
0.1806035E-01	0.1456567E-01	0.9603499E-02	0.4763068E-02	0.8587728E-03	-0.1197262E-02	0.7748878E-01
0.8033025E-01	0.2901341E-15	0.8052122E-01	0.8383701E-01	0.8432266E-01	0.7932553E-01	0.6916859E-01
0.5439698E-01	0.3692635E-01	0.1896912E-01	0.3044949E-02	-0.1029409E-01	-0.6610092E-02	0.5144972E-15
-0.6760863E-02	-0.7534010E-02	-0.9624462E-02	-0.9813352E-02	-0.9290481E-02	-0.7438859E-02	-0.5608034E-02
-0.4308285E-02	-0.4235943E-02	-0.6553803E-01	-0.6369468E-01	-0.2274550E-14	-0.6396344E-01	-0.6681041E-01
-0.6793715E-01	-0.6432261E-01	-0.5665087E-01	-0.4558407E-01	-0.3260362E-01	-0.1918505E-01	-0.7180233E-02
0.8266269E-04	0.8006761E-04	0.7935978E-04	0.7935992E-04	-0.8984513E-04	-0.2165866E-04	0.9444516E-02
0.9365891E-02	-0.1216329E-01	-0.1228596E-01	-0.9014768E-02	-0.8925568E-02	0.1165127E-01	0.1179379E-01
0.8457056E-02	0.1345907E-01	-0.3859119E-02	-0.1888327E-02	-0.8496017E-02	-0.1365205E-01	0.4045917E-02
0.2041395E-02	-0.1351451E-04	-0.5309774E-04	-0.1393410E-03	-0.3324833E-04	0.8660404E-02	0.2326500E-01
-0.1432522E-01	-0.4537631E-04	-0.1038858E-03	-0.1540608E-03	-0.1277747E-01	-0.1013854E-01	-0.2206971E-01
-0.5407795E-04	-0.1430296E-03	0.8451620E-04	-0.7103660E-02	-0.1903361E-01	0.9941769E-02	-0.2364134E-04
0.1136748E-03	0.1331898E-03	0.1321056E-01	0.1407222E-01	0.1719317E-01	-0.1415620E-04	0.1432652E-03
-0.8952085E-04	0.1792928E-01	-0.1192488E-01	0.6407274E-02	-0.8925275E-04	-0.1275113E-03	-0.6361345E-04
-0.9739897E-02	-0.2139439E-01	-0.3692866E-02	-0.1766569E-03	0.1137409E-03	-0.5361979E-04	-0.1859978E-01
0.9124977E-02	-0.6671428E-02	0.8656369E-04	0.1399919E-03	-0.1562964E-04	0.9002002E-02	0.1874671E-01
0.3453516E-02	0.1906502E-03	-0.1094610E-03	-0.1389436E-04	0.6823621E-01	0.6419671E-01	0.6080407E-01
0.5732669E-01	0.5318231E-01	-0.7690088E-01	-0.7266257E-01	-0.6848774E-01	-0.6304207E-01	-0.5575235E-01
0.9439966E-04						

SA-8 RUN #2 MODE 11 XN = 1.914805

0.3908987E-00	0.3440323E-00	0.3046371E-00	0.2637210E-00	0.2289543E-00	0.2155645E-00	0.1923525E-00
0.1723879E-00	0.1542337E-00	0.1451069E-00	0.1310[illegible]E-00	0.1181521E-00	0.1031159E-00	0.7728956E-01
0.5502484E-01	0.3039528E-01	0.1324260E-01	-0.2424[illegible]E-02	-0.1132324E-01	-0.1952717E-01	-0.2718431E-01
-0.3439640E-01	-0.4146639E-01	-0.	-0.3744[illegible]E-01	-0.4829584E-01	-0.5498625E-01	-0.6155040E-01
-0.	-0.	0.4839806E-02	-0.7783[illegible]E-01	-0.	-0.	-0.
-0.	-0.1152124E-01	-0.7916237E-02	-0.1365749E-01	-0.1472758E-01	-0.	-0.1547767E-01
-0.1612890E-01	-0.1639857E-01	-0.1564417E-01	-0.1378499E-01	-0.1108674E-01	-0.8938981E-02	-0.8421627E-02
-0.1050111E-01	-0.1904245E-01	-0.6144000E-02	0.4403232E-02	-0.	0.4716887E-02	0.1305028E-01
0.1905349E-01	0.2177985E-01	0.2121273E-01	0.1750535E-01	0.1110175E-01	0.2544862E-02	-0.7360902E-02
-0.8916727E-03	-0.8687552E-03	-0.	-0.8865173E-03	-0.1210139E-02	-0.1454720E-02	-0.1345948E-02
-0.1089792E-02	-0.6514021E-03	-0.1392929E-03	0.4092149E-03	0.9485549E-03	0.6078072E-02	-0.4572813E-02
-0.	-0.4898692E-02	-0.1332671E-01	-0.1939842E-01	-0.2215630E-01	-0.2155316E-01	-0.1777431E-01
-0.1126857E-01	-0.2580785E-02	0.7465996E-02	0.8901254E-03	0.9073291E-03	-0.	0.9550520E-03
0.1327449E-02	0.1611707E-02	0.1526848E-02	0.1254403E-02	0.7617132E-03	0.1744466E-03	-0.4566948E-03
-0.1094827E-02	-0.3253773E-02	0.4848055E-02	0.	0.5122201E-02	0.1195022E-01	0.1720141E-01
0.1980216E-01	0.1968696E-01	0.1680242E-01	0.1154623E-01	0.4418664E-02	-0.3819996E-02	-0.4858911E-02
0.2591604E-02	0.	0.2803006E-02	0.3559353E-02	0.1288494E-01	0.1526581E-01	0.1542592E-01
0.1338201E-01	0.9344303E-02	0.3723982E-02	-0.2865549E-02	0.3165283E-02	-0.4706888E-02	0.
-0.4979030E-02	-0.1165468E-01	-0.1681556E-01	-0.1937475E-01	-0.1928572E-01	-0.1649585E-01	-0.1139359E-01
-0.4466758E-02	0.3544092E-02	0.4758820E-02	-0.2712425E-02	0.	-0.2928295E-02	-0.8726370E-02
-0.1310219E-01	-0.1546931E-01	-0.1556675E-01	-0.1343609E-01	-0.9279179E-02	-0.3526856E-02	0.3200063E-02
0.9696678E-01	0.8566614E-01	0.7616863E-01	0.6627067E-01	0.5788226E-01	0.5463742E-01	0.4900467E-01
0.4414658E-01	0.3972573E-01	0.3749622E-01	0.3399503E-01	0.3077455E-01	0.2695890E-01	0.2042092E-01
0.1477800E-01	0.8510537E-02	0.1935639E-02	0.2290144E-03	-0.2030621E-02	-0.4114896E-02	-0.6058681E-02
-0.7877588E-02	-0.9723948E-02	0.	-0.8701930E-02	-0.1145970E-01	-0.1314484E-01	-0.1479894E-01
-0.1928810E-03	0.	0.1104554E-02	-0.1931557E-01	0.	0.	0.
0.	-0.6680874E-02	-0.4474912E-02	-0.5949127E-02	-0.5292373E-02	0.	-0.5031761E-02
-0.5022518E-02	-0.5411210E-02	-0.5643072E-02	-0.5339341E-02	-0.4452470E-02	-0.3566776E-02	-0.3107763E-02
-0.3365733E-02	-0.5272110E-02	-0.1111550E-01	-0.3055852E-02	0.1267194E-15	-0.2796292E-02	0.3814397E-02
0.9145293E-02	0.1265004E-01	0.1406229E-01	0.1371179E-01	0.1196052E-01	0.9475614E-02	0.7095627E-02
-0.2206788E-01	-0.5621480E-01	-0.3231826E-17	-0.5715951E-01	-0.8266908E-01	-0.9831272E-01	-0.1013099E-00
-0.9246919E-01	-0.7400122E-01	-0.4900609E-01	-0.2143760E-01	0.4063911E-02	-0.4893382E-02	0.1244452E-01
0.1641852E-15	0.1300481E-01	0.2722044E-01	0.3758409E-01	0.4232112E-01	0.4170314E-01	0.3646547E-01
0.2790269E-01	0.1770841E-01	0.8155824E-02	0.2324096E-02	0.5490756E-01	-0.8295843E-16	0.5646859E-01
0.9753399E-01	0.1255519E-00	0.1359700E-00	0.1294232E-00	0.1086969E-00	0.7788269E-01	0.4242802E-01
0.9078728E-02	-0.2645874E-01	-0.3448671E-01	-0.5145896E-16	-0.3479253E-01	-0.4187779E-01	-0.4654277E-01
-0.4712720E-01	-0.4352097E-01	-0.3634002E-01	-0.2679420E-01	-0.1652219E-01	-0.7340817E-02	-0.2686995E-02
0.6131910E-02	0.1168630E-15	0.6399489E-02	0.1348449E-01	0.1907366E-01	0.2255256E-01	0.2368561E-01
0.2286549E-01	0.2057111E-01	0.1766148E-01	0.1516904E-01	-0.2976294E-02	0.3631150E-02	0.1417961E-15
0.3878932E-02	0.9833760E-02	0.1483817E-01	0.1799693E-01	0.1928737E-01	0.1891976E-01	0.1735852E-01
0.1521797E-01	0.1329432E-01	-0.2737413E-01	-0.3859929E-01	-0.1283155E-14	-0.3896850E-01	-0.4822377E-01
-0.5457216E-01	-0.5627190E-01	-0.5274631E-01	-0.4471365E-01	-0.3350171E-01	-0.2119897E-01	-0.1012506E-01
-0.1162012E-04	-0.1059099E-04	-0.9816648E-05	-0.9816609E-05	0.3980187E-04	0.4928933E-04	-0.6901240E-02
-0.6877977E-02	0.1360816E-02	0.1372164E-02	0.6573453E-02	0.6547500E-02	-0.1038183E-02	-0.1052515E-02
-0.1112029E-01	-0.1038606E-01	-0.8357239E-02	-0.8220197E-02	0.1150752E-01	0.1101004E-01	0.7961799E-02
0.7587886E-02	0.1978767E-04	-0.2580510E-04	0.9718548E-04	0.5157168E-04	-0.7049698E-02	-0.2528323E-01
-0.2054638E-02	0.4241222E-04	-0.3791512E-04	0.8827148E-04	0.8790531E-02	-0.1050166E-01	0.2934997E-01
0.6069244E-04	0.1931082E-03	0.1153203E-05	0.3383495E-02	0.1911187E-01	0.8353615E-02	0.6339663E-04
0.8378775E-05	-0.4927447E-04	-0.1081260E-01	0.4678536E-02	-0.2201749E-01	0.4634502E-04	-0.1985456E-03
0.2353461E-04	-0.2197772E-01	-0.4226522E-02	-0.2203445E-02	-0.3254459E-04	0.8228471E-04	0.1352480E-04
-0.9964395E-02	0.2459165E-01	-0.1595134E-02	0.2225372E-04	0.7016685E-04	0.6064224E-04	0.2419433E-01
0.8357073E-02	0.2952717E-02	0.2904988E-04	-0.1142[illegible]E-03	0.1096631E-03	0.1141809E-01	-0.2059932E-01
0.2265075E-02	-0.4932059E-04	-0.8888630E-04	0.4701753E-04	0.1134197E-00	0.9548762E-01	0.8081702E-01
0.6586357E-01	0.4797249E-01	0.3717152E-02	0.3326153E-02	0.2975896E-02	0.2562746E-02	0.2033422E-02
-0.1333483E-04						

SA-8 RUN #2 MODE 12 XN = 1 872444

0.3261039E-01	0.2880286E-01	0.2564949E-01	0.2230870E-01	0.1952114E-01	0.1845483E-01	0.1654800E-01
0.1493341E-01	0.1350720E-01	0.1278338E-01	0.1138069E-01	0.1007748E-01	0.8515842E-02	0.5832696E-02
0.3450116E-02	0.8784184E-03	-0.9278765E-03	-0.2589602E-02	-0.3506554E-02	-0.4380328E-02	-0.5107736E-02
-0.5795141E-02	-0.6296393E-02	0.	-0.5970616E-02	-0.6940341E-02	-0.7443388E-02	-0.7905743E-02
0.	0.	0.6384201E-03	-0.9341771E-02	0.	0.	0.
0.	0.2450264E-02	0.2641458E-02	0.2324390E-02	0.2368528E-02	0.	0.2432611E-02
0.2559002E-02	0.2888328E-02	0.3236671E-02	0.3463091E-02	0.3204835E-02	0.2314865E-02	0.1008715E-02
-0.5955546E-03	-0.2338063E-02	-0.8094448E-02	0.1670324E-02	0.	0.1690929E-02	0.6064773E-02
0.7634057E-02	0.8465892E-02	0.8092865E-02	0.7010343E-02	0.4543338E-02	0.5321926E-03	-0.4873184E-02
-0.2450629E-01	0.1742469E-03	0.	0.4010518E-03	0.1098398E-01	0.1460863E-01	0.1690022E-01
0.1666177E-01	0.1525400E-01	0.1076684E-01	0.2666713E-03	-0.8476548E-02	0.7194508E-02	-0.1972451E-02
0.	-0.2102322E-02	-0.6202864E-02	-0.7732286E-02	-0.8815480E-02	-0.8347174E-02	-0.7208097E-02
-0.4659779E-02	-0.4291465E-03	0.5155289E-02	0.2521150E-01	0.2691013E-03	0.	0.4973608E-03
-0.1018813E-01	-0.1381828E-01	-0.1587791E-01	-0.1556670E-01	-0.1436372E-01	-0.1016962E-01	-0.2325483E-02
0.8340897E-02	0.1150161E-01	0.9470845E-03	-0.	0.8926153E-03	-0.3843130E-02	-0.5680661E-02
-0.6968206E-02	-0.7466781E-02	-0.7642169E-02	-0.6334621E-02	-0.3231466E-02	0.1389598E-02	-0.2493585E-01
0.2371378E-03	-0.	0.5789744E-03	0.1197175E-01	0.1600176E-01	0.1864265E-01	0.1909425E-01
0.1853048E-01	0.1442343E-01	0.5869716E-02	-0.6407113E-02	-0.1238358E-01	0.1611159E-02	-0.
0.1644886E-02	0.8555862E-02	0.1148684E-01	0.1331522E-01	0.1372945E-01	0.1331256E-01	0.1089168E-01
0.6162021E-02	-0.4604480E-03	0.2304574E-01	-0.4399756E-03	-0.	-0.6281078E-03	-0.1124600E-01
-0.1529321E-01	-0.1796481E-01	-0.1834267E-01	-0.1782715E-01	-0.1369435E-01	-0.5263698E-02	0.6685044E-02
0.3803975E-00	0.3376626E-00	0.3019096E-00	0.2642709E-00	0.2325866E-00	0.2202204E-00	0.1987708E-00
0.1800898E-00	0.1630924E-00	0.1544319E-00	0.1397495E-00	0.1266866E-00	0.1106391E-00	0.8339453E-01
0.5971904E-01	0.3327086E-01	0.3818775E-02	-0.5693993E-03	-0.9919796E-02	-0.1831053E-01	-0.2616124E-01
-0.3323673E-01	-0.4119495E-01	-0.	-0.3719759E-01	-0.4797421E-01	-0.5426958E-01	-0.6047285E-01
-0.1524935E-04	-0.	0.4583463E-02	-0.8324932E-01	-0.	-0.	-0.
-0.	-0.5582247E-01	-0.3754856E-01	-0.2872223E-01	-0.1087170E-01	-0.	-0.1713277E-02
0.2421090E-02	-0.3245830E-02	-0.1231756E-01	-0.1634752E-01	-0.1085560E-01	-0.2996904E-02	-0.3700573E-03
-0.8690016E-02	-0.2042662E-01	0.3523989E-02	0.5958012E-01	0.2751224E-15	0.6075788E-01	0.9653343E-01
0.1149714E-00	0.1178631E-00	0.1058486E-00	0.8514843E-01	0.5866976E-01	0.3019295E-01	0.1946437E-02
-0.4479032E-02	-0.3461830E-01	0.1165792E-16	-0.3524477E-01	-0.5461272E-01	-0.6461086E-01	-0.6611065E-01
-0.5962261E-01	-0.4805357E-01	-0.3298713E-01	-0.1647793E-01	-0.1698338E-03	0.8008984E-03	-0.5834410E-01
0.3239501E-15	-0.5944135E-01	-0.9561078E-01	-0.1130008E-00	-0.1146838E-00	-0.1019780E-00	-0.8127402E-01
-0.5527624E-01	-0.2745745E-01	0.1073380E-03	0.7255421E-02	0.3182088E-01	0.6751713E-16	0.3242052E-01
0.4932834E-01	0.5916856E-01	0.6156723E-01	0.5626940E-01	0.4598614E-01	0.3220915E-01	0.1687636E-01
0.1468700E-02	-0.2527728E-01	-0.2684623E-01	-0.1196938E-16	-0.2735663E-01	-0.3504543E-01	-0.4528562E-01
-0.5117533E-01	-0.5250401E-01	-0.4676509E-01	-0.3672422E-01	-0.2569448E-01	-0.1815403E-01	-0.1045405E-01
-0.9487829E-02	0.2870675E-15	-0.9584092E-02	-0.1049515E-01	-0.1240614E-01	-0.1321729E-01	-0.1325315E-01
-0.1150876E-01	-0.8862653E-02	-0.6120784E-02	-0.4524941E-02	0.2810890E-01	0.2728693E-01	0.3330333E-15
0.2777731E-01	0.3473075E-01	0.4579308E-01	0.5328834E-01	0.5605951E-01	0.5102003E-01	0.4087761E-01
0.2915486E-01	0.2063608E-01	0.1217357E-01	0.4095805E-02	-0.3130737E-14	0.4341078E-02	0.5477841E-02
0.8967635E-02	0.1058873E-01	0.1062361E-01	0.8965543E-02	0.6975726E-02	0.5424016E-02	0.5232533E-02
-0.1409657E-04	-0.3364798E-04	-0.5358249E-04	-0.5358271E-04	0.2923492E-03	-0.4915321E-05	-0.3451104E-02
-0.3360582E-02	-0.6032451E-02	-0.5807931E-02	0.2927617E-02	0.2814403E-02	0.6669554E-02	0.6405580E-02
0.2027738E-02	0.3730109E-02	-0.7263697E-02	-0.1289342E-01	-0.2054077E-02	-0.3502929E-02	0.6909724E-02
0.1265276E-01	-0.1136865E-04	-0.1700981E-03	0.1115734E-04	0.9482810E-05	-0.1652092E-01	-0.3040688E-02
-0.3076675E-01	0.1350201E-04	-0.1801936E-03	0.2369837E-04	-0.4901238E-02	-0.2968062E-01	0.5244081E-02
0.5230734E-04	0.8813746E-04	0.2510205E-04	0.1570377E-01	0.1457184E-02	0.3216854E-01	0.6713758E-05
0.1807335E-03	-0.1019003E-04	0.5546255E-02	0.2847189E-01	-0.3271156E-02	-0.3310030E-04	-0.7713136E-04
-0.3203309E-04	0.3823663E-03	-0.3098165E-01	0.5536676E-03	-0.1599999E-03	-0.1166765E-04	-0.4989087E-04
-0.3217813E-01	0.3189860E-02	-0.3686731E-02	0.2992239E-05	0.7886926E-04	-0.4122186E-04	-0.8528659E-03
0.3188890E-01	-0.5511974E-03	-0.1679800E-03	0.7188283E-05	0.8075215E-04	0.3226696E-01	-0.2325528E-02
0.3635736E-02	-0.1275887E-04	-0.7314338E-04	0.6256051E-04	0.3502146E-01	0.2944188E-01	0.2479907E-01
0.1984209E-01	0.1372272E-01	0.1129292E-00	0.9790136E-01	0.8450032E-01	0.6886861E-01	0.4875553E-01
-0.2206476E-04						

SA-8 RUN #2 MODE 13 XN = 1.871905

0.7363307E-02	0.6504837E-02	0.5772627E-02	0.5011883E-02	0.4347633E-02	0.4086130E-02	0.3648094E-02
0.3256117E-02	0.2887164E-02	0.2700795E-02	0.2407748E-02	0.2133745E-02	0.1811154E-02	0.1252455E-02
0.7703461E-03	0.2199351E-03	-0.1667712E-03	-0.5345162E-03	-0.7552483E-03	-0.9661665E-03	-0.1181128E-02
-0.1391200E-02	-0.1616180E-02	0.	-0.1490220E-02	-0.1822871E-02	-0.2041459E-02	-0.2261759E-02
0.	0.	0.2325991E-03	-0.2775765E-02	0.	0.	0.
0.	-0.1430646E-02	-0.1084534E-02	-0.1782193E-02	-0.1987012E-02	0.	-0.2159821E-02
-0.2364451E-02	-0.2665252E-02	-0.2853076E-02	-0.2905691E-02	-0.2725313E-02	-0.2354129E-02	-0.1933750E-02
-0.1558680E-02	-0.1689995E-02	-0.1987277E-02	0.1750593E-02	0.	0.1895587E-02	0.5255455E-02
0.7849552E-02	0.8968739E-02	0.8683643E-02	0.6970261E-02	0.4122859E-02	0.4204875E-03	-0.3759795E-02
-0.3208289E-02	0.3241033E-02	0.	0.3496982E-02	0.9647681E-02	0.1455107E-01	0.1669080E-01
0.1621287E-01	0.1302418E-01	0.7738786E-02	0.9103618E-03	-0.6775119E-02	0.2038282E-02	-0.1740658E-02
0.	-0.1873306E-02	-0.5245548E-02	-0.7831783E-02	-0.8918536E-02	-0.8642037E-02	-0.6939013E-02
-0.4109357E-02	-0.4426229E-03	0.3703857E-02	0.3156584E-02	-0.3221270E-02	0.	-0.3522352E-02
-0.9621036E-02	-0.1449440E-01	-0.1663848E-01	-0.1616176E-01	-0.1295965E-01	-0.7665304E-02	-0.8440275E-03
0.6848483E-02	0.4562589E-03	-0.2014968E-02	-0.	-0.2124106E-02	-0.4573158E-02	-0.6659056E-02
-0.7728693E-02	-0.7741557E-02	-0.6616777E-02	-0.4615445E-02	-0.1984065E-02	0.9788162E-03	-0.3174272E-02
0.4004167E-02	-0.	0.4283183E-02	0.1117474E-01	0.1698544E-01	0.1993288E-01	0.1994196E-01
0.1676075E-01	0.1106548E-01	0.3561056E-02	-0.4906827E-02	-0.1794263E-03	0.2448764E-02	-0.
0.2577005E-02	0.5217346E-02	0.7505744E-02	0.8678683E-02	0.8691475E-02	0.7452910E-02	0.5242140E-02
0.2333262E-02	-0.9426077E-03	0.3306366E-02	-0.3984193E-02	-0.	-0.4277932E-02	-0.1119488E-01
-0.1695296E-01	-0.1985323E-01	-0.1983738E-01	-0.1663303E-01	-0.1094062E-01	-0.3441156E-02	0.5031865E-02
0.4001649E-00	0.3520970E-00	0.3116913E-00	0.2698123E-00	0.2342147E-00	0.2205357E-00	0.1968306E-00
0.1764972E-00	0.1580330E-00	0.1487712E-00	0.1346015E-00	0.1213830E-00	0.1059577E-00	0.7940946E-01
0.5653502E-01	0.3123690E-01	0.5288961E-02	-0.2666409E-02	-0.1187562E-01	-0.2041531E-01	-0.2840805E-01
-0.3599064E-01	-0.4334181E-01	-0.	-0.3911296E-01	-0.5053126E-01	-0.5763053E-01	-0.6459852E-01
0.1982173E-04	-0.	0.4552547E-02	-0.8105852E-01	-0.	-0.	-0.
-0.	-0.7369645E-02	-0.4811659E-02	-0.1295345E-01	-0.1621189E-01	-0.	-0.1815892E-01
-0.1946661E-01	-0.1927340E-01	-0.1735348E-01	-0.1447690E-01	-0.1149288E-01	-0.9517414E-02	-0.9122319E-02
-0.1091249E-01	-0.2028195E-01	0.1608907E-01	0.5705682E-01	0.5786526E-15	0.5827824E-01	0.9041538E-01
0.1118199E-00	0.1183029E-00	0.1107290E-00	0.9119076E-01	0.6338441E-01	0.3207964E-01	0.3250349E-02
-0.6191050E-02	-0.2772688E-01	0.9789183E-16	-0.2837807E-01	-0.4532419E-01	-0.5669059E-01	-0.6028134E-01
-0.5652681E-01	-0.4656494E-01	-0.3235695E-01	-0.1643929E-01	-0.1950320E-02	-0.1395855E-01	-0.5520007E-01
0.6354968E-15	-0.5646099E-01	-0.8913560E-01	-0.1112508E-00	-0.1184280E-00	-0.1114152E-00	-0.9225629E-01
-0.6464635E-01	-0.3336817E-01	-0.4436953E-02	0.7163673E-02	0.2620349E-01	0.1495157E-15	0.2676309E-01
0.4149232E-01	0.5107884E-01	0.5370058E-01	0.4985534E-01	0.4056883E-01	0.2759616E-01	0.1318372E-01
0.9801307E-04	-0.1317942E-01	-0.2628360E-01	-0.2052181E-16	-0.2668471E-01	-0.3712200E-01	-0.4440690E-01
-0.4751441E-01	-0.4602226E-01	-0.4092813E-01	-0.3313067E-01	-0.2416872E-01	-0.1579382E-01	-0.3280876E-02
-0.8197180E-02	0.6018536E-15	-0.8355367E-02	-0.1237950E-01	-0.1528751E-01	-0.1664944E-01	-0.1627053E-01
-0.1449364E-01	-0.1165877E-01	-0.8364926E-02	-0.5295083E-02	0.1562793E-01	0.2899178E-01	0.8591871E-15
0.2939156E-01	0.3986608E-01	0.4688876E-01	0.4948220E-01	0.4733797E-01	0.4155684E-01	0.3311140E-01
0.2359993E-01	0.1480428E-01	0.6008651E-02	0.1170787E-01	-0.5590748E-14	0.1185524E-01	0.1598843E-01
0.1876197E-01	0.1984627E-01	0.1901593E-01	0.1656754E-01	0.1286537E-01	0.8616176E-02	0.4651068E-02
-0.1565606E-05	0.1010007E-05	0.3583826E-05	0.3583834E-05	-0.3990258E-04	-0.4289826E-05	-0.3324585E-02
-0.3324680E-02	-0.6789874E-02	-0.6793647E-02	0.3440579E-02	0.3440690E-02	0.6673189E-02	0.6677537E-02
0.5346234E-02	0.4911994E-02	-0.1485916E-01	-0.1373292E-01	-0.5206343E-02	-0.4712474E-02	0.1476550E-01
0.1353982E-01	-0.5606362E-06	-0.1016490E-03	0.5347866E-05	-0.6256475E-05	-0.1110904E-01	0.5210955E-03
-0.2733628E-01	-0.1819024E-04	-0.2133475E-03	0.3196935E-04	-0.1599530E-02	-0.2360129E-01	0.3436591E-02
-0.2204567E-04	0.3667212E-04	0.7259386E-04	0.1128683E-01	0.2622170E-03	0.2632680E-01	0.4704319E-05
0.2107129E-03	-0.3641439E-04	0.1897496E-02	0.2437143E-01	-0.4225326E-02	0.9687875E-05	-0.3296702E-04
-0.7428917E-04	0.2469993E-02	-0.2391967E-01	0.1343276E-02	-0.3539855E-04	-0.5382259E-04	-0.3267340E-04
-0.2590887E-01	0.1257103E-02	-0.3355509E-02	-0.3095658E-04	0.1384293E-03	-0.5682295E-04	-0.2417735E-02
0.2340381E-01	-0.1384519E-02	0.3762646E-04	0.5483644E-04	0.1908399E-04	0.2554637E-01	-0.1773354E-02
0.3292176E-02	0.3138069E-04	-0.1357798E-03	0.4134644E-04	0.2680413E-01	0.2243913E-01	0.1890148E-01
0.1532725E-01	0.1105821E-01	0.1095854E-06	0.9408693E-01	0.8018508E-01	0.6499904E-01	0.4626838E-01
-0.1564430E-05						

SA-8 RUN #2 MODE 14 XN = 1 868267

0.1222877E-00	0.1073607E-00	0.9482798E-01	0.8182079E-01	0.7079650E-01	0.6656075E-01	0.5919956E-01
0.5289443E-01	0.4718230E-01	0.4431659E-01	0.3994189E-01	0.3592959E-01	0.3126652E-01	0.2326376E-01
0.1636851E-01	0.8757068E-02	0.3460029E-02	-0.1364694E-02	-0.4094464E-02	-0.6603771E-02	-0.8931036E-02
-0.1111598E-01	-0.1324357E-01	0.	-0.1203356E-01	-0.1530544E-01	-0.1731297E-01	-0.1927762E-01
0.	0.	0.1449566E-02	-0.2416880E-01	0.	0.	0.
0.	-0.1214179E-02	-0.3461713E-03	-0.1603605E-02	-0.1779904E-02	0.	-0.1880776E-02
-0.1927650E-02	-0.1792864E-02	-0.1448157E-02	-0.9080341E-03	-0.3546441E-03	-0.1786102E-03	-0.6081567E-03
-0.1884084E-02	-0.4996988E-02	0.1231041E-02	-0.3606358E-03	0.	-0.4320537E-03	-0.1964494E-02
-0.3167708E-02	-0.3698410E-02	-0.3653413E-02	-0.3019484E-02	-0.1924103E-02	-0.4700939E-03	0.1177403E-02
0.3994861E-02	-0.3429634E-02	0.	-0.3693849E-02	-0.1027059E-01	-0.1512937E-01	-0.1701988E-01
-0.1626168E-01	-0.1287205E-01	-0.7387054E-02	-0.2863838E-03	0.7751623E-02	-0.1265854E-02	0.3201027E-03
0.	0.3779980E-03	0.1882825E-02	0.3056203E-02	0.3557329E-02	0.3532975E-02	0.2927946E-02
0.1870875E-02	0.4713716E-03	-0.1123033E-02	-0.3936640E-02	0.3443291E-02	0.	0.3750603E-02
0.1031421E-01	0.1517790E-01	0.1708538E-01	0.1632198E-01	0.1290214E-01	0.7382263E-02	0.2553325E-03
-0.7823126E-02	-0.1544279E-02	0.3044033E-02	-0.	0.3213246E-02	0.7268803E-02	0.1043803E-01
0.1194210E-01	0.1178950E-01	0.9914875E-02	0.6611126E-02	0.2192028E-02	-0.2873284E-02	0.3372751E-02
-0.3001223E-02	-0.	-0.3237112E-02	-0.9159038E-02	-0.1393972E-01	-0.1624263E-01	-0.1618539E-01
-0.1363024E-01	-0.9042012E-02	-0.2893150E-02	0.4139125E-02	0.1461864E-02	-0.3078675E-02	-0.
-0.3258118E-02	-0.7325236E-02	-0.1053877E-01	-0.1205388E-01	-0.1189981E-01	-0.1001129E-01	-0.6686361E-02
-0.2242651E-02	0.2848035E-02	-0.3410178E-02	0.3023491E-02	-0.	0.3271943E-02	0.9193417E-02
0.1392738E-01	0.1621449E-01	0.1616393E-01	0.1360783E-01	0.9033877E-02	0.2898055E-02	-0.4127498E-02
-0.3789373E-00	-0.3340038E-00	-0.2962019E-00	-0.2569758E-00	-0.2235629E-00	-0.2106966E-00	-0.1884272E-00
-0.1692554E-00	-0.1517885E-00	-0.1430031E-00	-0.1294228E-00	-0.1167376E-00	-0.1019021E-00	-0.7635603E-01
-0.5432676E-01	-0.2995028E-01	-0.4898068E-02	0.2706913E-02	0.1158565E-01	0.1981352E-01	0.2751613E-01
0.3481862E-01	0.4191172E-01	-0.	0.3784160E-01	0.4883020E-01	0.5565749E-01	0.6235655E-01
-0.9265126E-04	-0.	-0.4382989E-02	0.7826974E-01	-0.	-0.	-0.
-0.	0.7638463E-02	0.5597688E-02	0.1211826E-01	0.1477505E-01	-0.	0.1632055E-01
0.1731111E-01	0.1705092E-01	0.1544160E-01	0.1295519E-01	0.1008341E-01	0.8006087E-02	0.7658280E-02
0.1000499E-01	0.1943558E-01	-0.2078370E-01	-0.6157523E-01	-0.5469459E-15	-0.6275123E-01	-0.9412952E-01
-0.1142292E-00	-0.1192434E-00	-0.1103216E-00	-0.8980623E-01	-0.6139920E-01	-0.2974471E-01	-0.5706582E-03
-0.3047559E-02	0.8531978E-02	-0.1070670E-15	0.8902928E-02	0.1833893E-01	0.2510489E-01	0.2799289E-01
0.2721254E-01	0.2328422E-01	0.1714934E-01	0.1003056E-01	0.3528283E-02	0.1234471E-01	0.6319873E-01
-0.5797232E-15	0.6472905E-01	0.1046251E-00	0.1313951E-00	0.1401389E-00	0.1320838E-00	0.1098073E-00
0.7768556E-01	0.4125730E-01	0.7467238E-02	-0.5547648E-02	-0.7337736E-02	-0.2088025E-15	-0.7376599E-02
-0.8491289E-02	-0.8703718E-02	-0.7826425E-02	-0.6156163E-02	-0.3854093E-02	-0.1265348E-02	0.1254660E-02
0.3289832E-02	0.5534694E-02	0.1560626E-01	-0.2825062E-17	0.1591290E-01	0.2399580E-01	0.3014907E-01
0.3358128E-01	0.3369724E-01	0.3100618E-01	0.2606672E-01	0.2006489E-01	0.1441548E-01	0.9515571E-03
0.8436157E-02	-0.5746432E-15	0.8670760E-02	0.1475148E-01	0.1943735E-01	0.2209835E-01	0.2244126E-01
0.2082679E-01	0.1772178E-01	0.1397519E-01	0.1058451E-01	-0.1936327E-01	-0.3023308E-01	-0.8322239E-15
-0.3056383E-01	-0.3917890E-01	-0.4506449E-01	-0.4715309E-01	-0.4486573E-01	-0.3891530E-01	-0.3020665E-01
-0.2039925E-01	-0.1137557E-01	-0.1520171E-01	-0.2400889E-01	0.5259646E-14	-0.2426945E-01	-0.3117018E-01
-0.3600682E-01	-0.3771900E-01	-0.3581653E-01	-0.3078374E-01	-0.2347990E-01	-0.1533849E-01	-0.7962202E-02
-0.1682164E-04	-0.1604395E-04	-0.1558839E-04	-0.1558840E-04	0.3100010E-04	0.2449935E-04	0.7592314E-03
0.7667672E-03	0.7584667E-02	0.7588297E-02	-0.9076310E-03	-0.9153718E-03	-0.7434044E-02	-0.7438091E-02
-0.9309638E-02	-0.8851389E-02	0.1216446E-01	0.1134633E-01	0.9317801E-02	0.8877934E-02	-0.1219786E-01
-0.1137229E-01	0.1050071E-04	0.1012846E-03	0.3093517E-04	0.2539225E-04	0.9111320E-02	-0.9508890E-02
0.2839505E-01	0.3460665E-04	0.2081440E-03	0.2410679E-05	0.4935195E-02	0.2155896E-01	0.6878738E-02
0.4124042E-04	0.2692271E-04	-0.7137052E-04	-0.1058165E-01	0.6491093E-02	-0.2507413E-01	0.1799300E-04
-0.2171053E-03	0.1503192E-04	-0.6095238E-02	-0.2448652E-01	-0.3445323E-02	0.1097771E-04	-0.3401774E-04
0.8378602E-04	-0.1036750E-01	0.2427404E-01	-0.2240314E-02	0.3581006E-04	0.8362152E-04	0.3938348E-04
0.2421278E-01	0.7491069E-02	0.3026704E-02	0.4106064E-04	-0.1177801E-03	0.8108822E-04	0.1118528E-01
-0.2224388E-01	0.2572671E-02	-0.4060871E-04	-0.9635236E-04	0.1882123E-04	-0.2332129E-01	-0.5502108E-02
-0.2699296E-02	-0.5045303E-04	0.1072255E-03	-0.2591431E-04	0.8570238E-02	0.7136800E-02	0.5944235E-02
0.4717496E-02	0.3259735E-02	-0.1131677E-00	-0.9730875E-01	-0.8297830E-01	-0.6717866E-01	-0.4759088E-01
-0.1886821E-04						

SA-8 RUN #2 MODE 15 XN = 1 315205

0.3338577E-02	0.2921639E-02	0.2596200E-02	0.2240397E-02	0.1973153E-02	0.1879120E-02	0.1680359E-02
0.1535179E-02	0.1430831E-02	0.1378099E-02	0.1226224E-02	0.1088003E-02	0.9194914E-03	0.6343500E-03
0.3686473E-03	0.1096849E-03	-0.7262533E-04	-0.2366479E-03	-0.3104599E-03	-0.3829512E-03	-0.4096456E-03
-0.4307772E-03	-0.3784965E-03	0.	-0.3913440E-03	-0.3914452E-03	-0.3515407E-03	-0.2984648E-03
0.	0.	0.7883555E-05	-0.2168111E-03	0.	0.	0.
0.	0.6476567E-03	0.5985289E-03	0.6529609E-03	0.6951503E-03	0.	0.7334579E-03
0.7872678E-03	0.8936764E-03	0.9865449E-03	0.1030235E-02	0.9385590E-03	0.7105470E-03	0.4409549E-03
0.1963134E-03	0.1749900E-03	-0.4629241E-02	-0.5918896E-03	0.	-0.5666175E-03	0.1473694E-02
0.2428044E-02	0.2954108E-02	0.2899254E-02	0.2464089E-02	0.1473696E-02	-0.8548170E-04	-0.2142416E-02
-0.1239353E-01	-0.1974172E-02	0.	-0.1835012E-02	0.3281545E-02	0.5585833E-02	0.6847529E-02
0.6666477E-02	0.5619282E-02	0.3205319E-02	-0.6280022E-03	-0.5587273E-02	0.4438770E-02	0.5317506E-03
0.	0.4603752E-03	-0.1548018E-02	-0.2534000E-02	-0.3177170E-02	-0.3077123E-02	-0.2594640E-02
-0.1532679E-02	0.1616338E-03	0.2342503E-02	0.1264617E-01	0.2035303E-02	0.	0.2074410E-02
-0.3155797E-02	-0.5528657E-02	-0.6745787E-02	-0.6562060E-02	-0.5596689E-02	-0.3270448E-02	0.5188672E-03
0.5366763E-02	0.5459603E-02	0.9214895E-03	-0.	0.8779964E-03	-0.1437336E-02	-0.2552173E-02
-0.3193017E-02	-0.3282998E-02	-0.3026454E-02	-0.2098559E-02	-0.4678598E-03	0.1719782E-02	-0.1227660E-01
-0.1941249E-02	-0.	-0.1764346E-02	0.3451718E-02	0.5765701E-02	0.7095812E-02	0.7175781E-02
0.6516284E-02	0.4418828E-02	0.7097087E-03	-0.4291206E-02	-0.5727888E-02	-0.8501197E-03	-0.
-0.8468891E-03	0.1510646E-02	0.2435389E-02	0.2949017E-02	0.2958242E-02	0.2711308E-02	0.1857500E-02
0.3256051E-03	-0.1767297E-02	0.1194148E-01	0.1970035E-02	-0.	0.1846356E-02	-0.3298480E-02
-0.5803980E-02	-0.7272998E-02	-0.7393622E-02	-0.6760746E-02	-0.4590060E-02	-0.7988366E-03	0.4248952E-02
-0.4686381E-00	-0.4064846E-00	-0.3544654E-00	-0.3010591E-00	-0.2561513E-00	-0.2391777E-00	-0.2093739E-00
-0.1844623E-00	-0.1622557E-00	-0.1512322E-00	-0.1363051E-00	-0.1224221E-00	-0.1067387E-00	-0.7984758E-01
-0.5706755E-01	-0.3237654E-01	-0.3064462E-02	0.1479919E-03	0.8307932E-02	0.1549111E-01	0.2182811E-01
0.2760412E-01	0.3272732E-01	-0.	0.2965165E-01	0.3786974E-01	0.4295125E-01	0.4781774E-01
-0.7215521E-05	-0.	-0.2230212E-02	0.5692180E-01	-0.	-0.	-0.
-0.	-0.2604326E-01	-0.2050607E-01	-0.1710917E-01	-0.1129358E-01	-0.	-0.8645143E-02
-0.8117769E-02	-0.1211770E-01	-0.1737034E-01	-0.2080561E-01	-0.1986809E-01	-0.1601679E-01	-0.1188673E-01
-0.9177767E-02	-0.4352754E-02	-0.1213512E-02	0.2432943E-01	0.2340782E-16	0.2491539E-01	0.4185583E-01
0.5087510E-01	0.5196907E-01	0.4553396E-01	0.3441370E-01	0.2074285E-01	0.7465423E-02	-0.2827011E-02
0.9409905E-03	-0.9347413E-02	-0.4206020E-17	-0.9553173E-02	-0.1606498E-01	-0.1925103E-01	-0.1939412E-01
-0.1670041E-01	-0.1230699E-01	-0.7006932E-02	-0.1891472E-02	0.2095588E-02	0.1924701E-02	-0.2551926E-01
0.3727137E-16	-0.2608685E-01	-0.4372636E-01	-0.5265400E-01	-0.5327488E-01	-0.4624885E-01	-0.3455328E-01
-0.2035642E-01	-0.6632667E-02	0.3939125E-02	-0.1905730E-03	0.8253428E-02	-0.3025633E-17	0.8456785E-02
0.1424996E-01	0.1753865E-01	0.1815001E-01	0.1601342E-01	0.1218604E-01	0.7413879E-02	0.2730749E-02
-0.9777054E-03	-0.1187192E-01	-0.9047760E-02	-0.3058430E-17	-0.9343338E-02	-0.1267636E-01	-0.1905858E-01
-0.2471909E-01	-0.2836174E-01	-0.2822653E-01	-0.2465918E-01	-0.1839841E-01	-0.1108621E-01	-0.5359380E-02
-0.4580317E-02	0.2161791E-16	-0.4708131E-02	-0.6330250E-02	-0.9094589E-02	-0.1145239E-01	-0.1288964E-01
-0.1268312E-01	-0.1096754E-01	-0.8027899E-02	-0.4566003E-02	0.1294386E-01	0.9641731E-02	0.2753647E-16
0.9960119E-02	0.1359828E-01	0.2087607E-01	0.2756530E-01	0.3193996E-01	0.3200926E-01	0.2811962E-01
0.2114334E-01	0.1293233E-01	0.5259148E-02	0.1678568E-02	-0.4101085E-15	0.1845999E-02	0.3238149E-02
0.6314957E-02	0.8902987E-02	0.1051978E-01	0.1071820E-01	0.9717268E-02	0.7687023E-02	0.5131441E-02
0.1131176E-03	0.1052117E-03	0.9716585E-04	0.9716573E-04	0.2949144E-04	-0.3103065E-04	0.1739590E-02
0.1763360E-02	0.4592878E-02	0.4651621E-02	-0.2185224E-02	-0.2214070E-02	-0.4165553E-02	-0.4234413E-02
-0.1866455E-02	-0.7393313E-03	0.5413107E-02	0.2174359E-02	0.1823653E-02	0.7178650E-03	-0.5463796E-02
-0.2194086E-02	-0.2204214E-04	0.1466525E-04	-0.1468999E-05	0.6540523E-05	-0.1365053E-02	-0.1439018E-03
-0.4607622E-02	0.1049656E-04	0.1048051E-04	0.5775461E-05	0.3493152E-02	-0.4522593E-02	0.7251967E-03
0.1982691E-04	0.2329391E-04	-0.7366803E-04	0.9407327E-03	-0.9139956E-03	0.5599786E-02	0.3827444E-05
-0.8671887E-05	0.2537278E-05	-0.3122600E-02	0.3705340E-02	0.4720405E-03	-0.7012409E-05	-0.1919825E-04
0.6771158E-04	0.1880529E-02	-0.4655266E-02	0.3007248E-03	0.1136770E-04	-0.1482409E-04	0.1666757E-04
-0.5024725E-02	0.1111194E-03	0.1639539E-02	-0.4079055E-05	-0.4697502E-04	-0.1087179E-04	-0.2048371E-02
0.5278927E-02	-0.3652392E-03	-0.6230361E-05	0.1321723E-04	0.2155735E-05	0.5206837E-02	0.4455394E-03
-0.1712176E-02	-0.1386742E-05	0.5034803E-04	0.2405367E-04	-0.2411678E-01	-0.2028102E-01	-0.1716348E-01
-0.1405384E-01	-0.1036937E-01	-0.1111064E-00	-0.9662524E-01	-0.8273160E-01	-0.6690253E-01	-0.4719419E-01
0.1119195E-03						

SA-8 RUN #2 MODE 16 XN = 1.315168

0.4719744E-02	0.4109546E-02	0.3599238E-02	0.3072412E-02	0.2629846E-02	0.2461248E-02	0.2169032E-02
0.1922321E-02	0.1702227E-02	0.1594581E-02	0.1431873E-02	0.1283734E-02	0.1112284E-02	0.8185498E-03
0.5640899E-03	0.2845504E-03	0.8935355E-04	-0.8572813E-04	-0.1844413E-03	-0.2734592E-03	-0.3544725E-03
-0.4287509E-03	-0.5006590E-03	0.	-0.4603270E-03	-0.5686046E-03	-0.6337722E-03	-0.6962798E-03
0.	0.	0.4326021E-04	-0.9005215E-03	0.	0.	0.
0.	0.5405069E-03	0.4976133E-03	0.6139134E-03	0.6601133E-03	0.	0.7023829E-03
0.7570257E-03	0.8482474E-03	0.9153009E-03	0.9454432E-03	0.8958616E-03	0.7606667E-03	0.5682934E-03
0.3304678E-03	0.9443572E-04	0.2440532E-02	0.4654273E-03	0.	0.3945093E-03	-0.1327054E-02
-0.2646969E-02	-0.3267976E-02	-0.3250471E-02	-0.2581247E-02	-0.1387090E-02	0.2144495E-03	0.2052564E-02
0.5193561E-02	0.1046448E-02	0.	0.8925840E-03	-0.2794057E-02	-0.5628702E-02	-0.6926474E-02
-0.6827149E-02	-0.5312615E-02	-0.2670516E-02	0.8404460E-03	0.4848599E-02	-0.2579828E-02	-0.4942990E-03
0.	-0.4213017E-03	0.1378164E-02	0.2754565E-02	0.3410211E-02	0.3402390E-02	0.2717448E-02
0.1483968E-02	-0.1771479E-03	-0.2087153E-02	-0.5208261E-02	-0.1087015E-02	0.	-0.9321421E-03
0.2745880E-02	0.5589286E-02	0.6856491E-02	0.6809687E-02	0.5312362E-02	0.2691585E-02	-0.7975235E-03
-0.4782623E-02	-0.1898769E-02	-0.3005423E-03	-0.	-0.2379066E-03	0.1237187E-02	0.2449251E-02
0.3092874E-02	0.3177935E-02	0.2660018E-02	0.1643231E-02	0.2395081E-03	-0.1384569E-02	0.4911482E-02
0.9069255E-03	-0.	0.7506461E-03	-0.2931560E-02	-0.5935456E-02	-0.7497825E-02	-0.7665149E-02
-0.6329309E-02	-0.3763298E-02	-0.2493816E-03	0.3800070E-02	0.1492982E-02	0.1298790E-03	-0.
0.7362868E-04	-0.1223537E-02	-0.2291394E-02	-0.2831404E-02	-0.2859108E-02	-0.2337460E-02	-0.1371358E-02
-0.7366444E-04	0.1433780E-02	-0.5304720E-02	-0.1111637E-02	-0.	-0.9507255E-03	0.2870200E-02
0.5539483E-02	0.7642959E-02	0.7870151E-02	0.6554759E-02	0.3967082E-02	0.3955957E-03	-0.3732568E-02
0.4672536E-00	0.4055900E-00	0.3540833E-00	0.3010284E-00	0.2566478E-00	0.2398321E-00	0.2102598E-00
0.1855247E-00	0.1635316E-00	0.1525913E-00	0.1374297E-00	0.1235820E-00	0.1076817E-00	0.8057116E-01
0.5755056E-01	0.3252012E-01	0.1972959E-02	0.1467732E-03	-0.8015090E-02	-0.1509135E-01	-0.2132208E-01
-0.2685907E-01	-0.3214778E-01	-0.	-0.2918757E-01	-0.3708787E-01	-0.4182576E-01	-0.4636507E-01
-0.1649737E-04	-0.	0.2241204E-02	-0.5763556E-01	-0.	-0.	-0.
-0.	0.9275229E-02	0.9480865E-02	0.1212814E-01	0.1391467E-01	-0.	0.1524364E-01
0.1663481E-01	0.1844898E-01	0.1963848E-01	0.2030033E-01	0.1969423E-01	0.1745851E-01	0.1403228E-01
0.9595159E-02	0.4374390E-02	-0.3758013E-02	-0.2397806E-01	-0.1290020E-15	-0.2455063E-01	-0.3977240E-01
-0.4893566E-01	-0.5024274E-01	-0.4459995E-01	-0.3365495E-01	-0.1989086E-01	-0.6414621E-02	0.3284706E-02
-0.1094331E-03	0.9059121E-02	-0.3216619E-16	0.9322949E-02	0.1634694E-01	0.2075312E-01	0.2169246E-01
0.1953054E-01	0.1497508E-01	0.9107472E-02	0.3289999E-02	-0.9325818E-03	0.2574680E-02	0.2449723E-01
-0.1336538E-15	0.2512864E-01	0.4183897E-01	0.5217722E-01	0.5412829E-01	0.4858341E-01	0.3727016E-01
0.2279418E-01	0.8429771E-02	-0.2113161E-02	-0.1349516E-02	-0.9184977E-02	-0.5335223E-16	-0.9398012E-02
-0.1520684E-01	-0.1860372E-01	-0.1893037E-01	-0.1657821E-01	-0.1220235E-01	-0.6798947E-02	-0.1608897E-02
0.1990759E-02	0.6968111E-02	0.8089599E-02	0.6580222E-18	0.8354001E-02	0.1276376E-01	0.1861751E-01
0.2407154E-01	0.2740495E-01	0.2786029E-01	0.2504810E-01	0.1921318E-01	0.1128946E-01	0.2039626E-02
0.2794195E-02	-0.1356280E-15	0.2919483E-02	0.5111501E-02	0.7910769E-02	0.1045966E-01	0.1200165E-01
0.1220513E-01	0.1093018E-01	0.8325711E-02	0.4845094E-02	-0.9510705E-02	-0.1101230E-01	-0.2234440E-15
-0.1129214E-01	-0.1604003E-01	-0.2205397E-01	-0.2740343E-01	-0.3035066E-01	-0.3016368E-01	-0.2652076E-01
-0.1977888E-01	-0.1100293E-01	-0.3995917E-02	-0.4864677E-02	0.1250617E-14	-0.4976490E-02	-0.7003532E-02
-0.9555920E-02	-0.1180792E-01	-0.1298363E-01	-0.1275717E-01	-0.1103159E-01	-0.8014309E-02	-0.4199662E-02
-0.1176061E-03	-0.1162769E-03	-0.1151545E-03	-0.1151545E-03	0.7697237E-04	0.3172617E-04	-0.1715379E-02
-0.1705068E-02	-0.4340166E-02	-0.4314365E-02	0.1868923E-02	0.1856266E-02	0.4242620E-02	0.4212598E-02
0.9850693E-03	0.6322895E-03	-0.2589843E-02	-0.1717210E-02	-0.9859982E-03	-0.5797495E-03	0.2541190E-02
0.1701287E-02	0.1953994E-04	-0.3769780E-04	0.1068874E-05	0.4093577E-05	-0.5436035E-03	-0.7564269E-03
0.4185692E-02	0.7458653E-05	0.1787746E-05	-0.9668537E-05	-0.4968048E-02	0.2634423E-02	-0.5058421E-03
0.1031116E-04	-0.1112122E-04	0.6046764E-04	0.4487868E-03	0.3280658E-03	-0.3648539E-02	0.6865159E-06
-0.3676619E-05	0.1015405E-04	0.4701795E-02	-0.3126335E-02	0.1028046E-02	-0.1583281E-05	0.9764267E-05
-0.5605595E-04	-0.1590865E-02	0.3176028E-02	-0.4352177E-03	-0.4319354E-04	0.1948311E-04	0.6721976E-05
0.3211308E-02	0.2263156E-03	-0.1619078E-02	0.1375272E-04	0.2657905E-04	0.2477695E-04	0.1810840E-02
-0.2861910E-02	0.5352775E-03	0.4088429E-04	-0.2100743E-04	0.1721973E-05	-0.3152635E-02	0.1031684E-03
0.1716607E-02	-0.1372651E-04	-0.2901897E-04	-0.1528409E-04	0.2649035E-01	0.2233215E-01	0.1891918E-01
0.1542585E-01	0.1122026E-01	0.1116770E-02	0.9719757E-01	0.8343793E-01	0.6750868E-01	0.4745362E-01
-0.1195141E-03						

0.1437131E-01	0.1138013E-01	0.8876005E-02	0.6387456E-02	0.4335858E-02	0.3580083E-02	0.2249019E-02
0.1186602E-02	0.2568124E-03	-0.1825269E-03	-0.3702114E-03	-0.4833301E-03	-0.5238110E-03	-0.5587299E-03
-0.4985115E-03	-0.4386002E-03	-0.3715985E-03	-0.2419004E-03	-0.1992194E-03	-0.1310243E-03	-0.1340873E-03
-0.1369245E-03	-0.3261228E-03	0.	-0.2775852E-03	-0.3416069E-03	-0.4613007E-03	-0.6110004E-03
0.	0.	0.2293508E-04	-0.1285164E-02	0.	0.	0.
0.	0.5925253E-02	0.4108409E-02	0.8307740E-02	0.9446543E-02	0.	0.1040826E-01
0.1150678E-01	0.1291733E-01	0.1345005E-01	0.1293475E-01	0.1102410E-01	0.8306360E-02	0.5606654E-02
0.3509447E-02	0.3694623E-02	-0.5431933E-03	-0.5110027E-02	0.	-0.4906776E-02	-0.3982374E-02
-0.6493004E-03	0.1509725E-02	0.3401131E-02	0.3500943E-02	0.2944266E-02	0.2202583E-02	0.1750012E-02
-0.9975977E-02	-0.1918195E-01	0.	-0.1865449E-01	-0.1304133E-01	-0.1082113E-02	0.7126372E-02
0.1351336E-01	0.1383371E-01	0.1111164E-01	0.6715631E-02	0.2018046E-02	0.1134412E-02	0.5118347E-02
0.	0.4999139E-02	0.3896567E-02	0.6349650E-03	-0.1238883E-02	-0.3155776E-02	-0.3291170E-02
-0.2821888E-02	-0.2295220E-02	-0.2036987E-02	0.9160425E-02	0.1890994E-01	0.	0.1803549E-01
0.1280170E-01	0.1023668E-02	-0.7186332E-02	-0.1352932E-01	-0.1369052E-01	-0.1084154E-01	-0.6435406E-02
-0.1621897E-02	0.5930168E-02	0.7961553E-02	-0.	0.7646808E-02	0.3867193E-02	-0.2273145E-02
-0.6278759E-02	-0.8614947E-02	-0.7466882E-02	-0.4582199E-02	-0.9101939E-03	0.2759766E-02	-0.5720579E-02
-0.1496173E-01	-0.	-0.1451331E-01	-0.9314629E-02	0.2377053E-02	0.9997001E-02	0.1489531E-01
0.1295728E-01	0.8020481E-02	0.2206766E-02	-0.3022147E-02	-0.5683498E-02	-0.8880432E-02	-0.
-0.8480120E-02	-0.4734637E-02	0.2156004E-02	0.6856629E-02	0.9651594E-02	0.8598451E-02	0.5529782E-02
0.1530812E-02	-0.2505292E-02	0.7531283E-02	0.1494743E-01	-0.	0.1439026E-01	0.8501552E-02
-0.3017638E-02	-0.1042840E-01	-0.1527122E-01	-0.1327223E-01	-0.8378584E-02	-0.2511432E-02	0.2913126E-02
0.1990450E-00	0.1618770E-00	0.1311247E-00	0.1004198E-00	0.7530213E-01	0.6626535E-01	0.5000422E-01
0.3741043E-01	0.2690938E-01	0.2196746E-01	0.1813665E-01	0.1455085E-01	0.1144583E-01	0.6201166E-02
0.2305504E-02	-0.1223358E-02	-0.7266227E-02	-0.7171527E-02	-0.7726762E-02	-0.7967154E-02	-0.7878213E-02
-0.7744391E-02	-0.5540332E-02	-0.	-0.5756360E-02	-0.5117911E-02	-0.4886974E-02	-0.4584292E-02
0.1025515E-04	-0.	-0.1007193E-03	0.7583028E-02	-0.	-0.	-0.
-0.	-0.2311285E-01	-0.1192900E-01	-0.9484501E-01	-0.1369029E-00	-0.	-0.1657074E-00
-0.1919702E-00	-0.2159412E-00	-0.2220421E-00	-0.2162912E-00	-0.1931259E-00	-0.1517759E-00	-0.1004845E-00
-0.4466864E-01	-0.2421150E-01	-0.1539633E-02	0.2674045E-01	0.6151717E-15	0.2791328E-01	0.5504485E-01
0.7323220E-01	0.7272304E-01	0.5952103E-01	0.3434205E-01	0.6868635E-02	-0.1216281E-01	-0.1031998E-01
-0.5525744E-02	-0.1287013E-01	0.2005432E-15	-0.1328111E-01	-0.2177045E-01	-0.2753543E-01	-0.2641517E-01
-0.2057130E-01	-0.1044706E-01	0.3773792E-04	0.6635883E-02	0.4610659E-02	-0.3412002E-02	-0.2968569E-01
0.8399987E-15	-0.3103475E-01	-0.5865574E-01	-0.7834180E-01	-0.7870582E-01	-0.6499058E-01	-0.3813429E-01
-0.8414969E-02	0.1274868E-01	0.1231621E-01	-0.1127080E-02	0.9521981E-02	0.1605192E-15	0.9894507E-02
0.1897349E-01	0.2417776E-01	0.2271468E-01	0.1744367E-01	0.8662997E-02	-0.1788890E-03	-0.5351885E-02
-0.2412246E-02	-0.8284952E-02	0.2290688E-01	-0.2224920E-16	0.2648020E-01	0.9071766E-01	0.1631369E-00
0.2135839E-00	0.2313359E-00	0.2086033E-00	0.1551940E-00	0.8859220E-01	0.3211385E-01	-0.8389902E-02
0.8146849E-02	0.8830646E-15	0.9905643E-02	0.4160123E-01	0.7685530E-01	0.1015212E-00	0.1103673E-00
0.9982523E-01	0.7436275E-01	0.4223520E-01	0.1456461E-01	0.4136760E-02	-0.2394958E-01	0.1328307E-14
-0.2747647E-01	-0.9016416E-01	-0.1627478E-00	-0.2140834E-00	-0.2324250E-00	-0.2095632E-00	-0.1554063E-00
-0.8779156E-01	-0.3043737E-01	0.4712757E-02	-0.5981866E-02	-0.6697366E-14	-0.7992389E-02	-0.4059285E-01
-0.7693665E-01	-0.1007928E-00	-0.1075900E-00	-0.9510867E-01	-0.6880885E-01	-0.3722000E-01	-0.1102262E-01
-0.8529460E-03	-0.8140963E-03	-0.7755801E-03	-0.7755800E-03	0.1366583E-03	0.2060361E-03	-0.8344199E-02
-0.8381601E-02	-0.2802554E-01	-0.2806849E-01	0.9090604E-02	0.9136451E-02	0.2759943E-01	0.2764417E-01
0.7021158E-02	0.6530650E-02	-0.1484293E-01	-0.1027586E-01	-0.6829630E-02	-0.6381851E-02	0.1480614E-01
0.1042681E-01	0.1454542E-03	-0.5613182E-04	-0.1880251E-04	0.1297486E-04	0.1344239E-01	0.1002593E-01
-0.1407494E-01	0.2241541E-04	-0.2790234E-03	-0.1389496E-03	-0.1776970E-01	-0.6746389E-02	-0.3403698E-02
-0.3883243E-04	-0.8332234E-04	0.5970091E-03	-0.1246952E-01	-0.1143405E-01	0.1610917E-01	0.3532602E-05
0.2822417E-03	0.1290285E-03	0.1761096E-01	0.5014121E-02	0.5159603E-02	0.6672923E-04	0.8238661E-04
-0.5865224E-03	-0.5978208E-03	-0.8474588E-02	-0.2482497E-02	0.8096703E-03	-0.9353916E-04	-0.4042803E-04
-0.2770640E-01	-0.4843514E-02	0.6837025E-02	0.1571681E-04	0.7905183E-04	0.7402714E-04	0.8004542E-03
0.9537574E-02	0.2799922E-02	-0.8169386E-03	0.9747781E-04	0.6570566E-04	0.2747864E-01	0.6032109E-02
-0.6510394E-02	-0.7135921E-05	-0.8212712E-04	-0.4203542E-04	0.2313317E-02	0.1272825E-02	0.4721398E-03
0.4851361E-04	-0.3299229E-03	0.1247533E-01	0.9672587E-02	0.6296793E-02	0.3472293E-02	0.9021276E-03
-0.8626754E-03						

SA-8 RUN #2 MODE 18 XN = .4126714

0.8180205E-03	0.2835355E-03	-0.5235456E-03	-0.1032346E-02	-0.1931081E-02	-0.2382516E-02	-0.2665503E-02
-0.3224020E-02	-0.4116466E-02	-0.4540424E-02	-0.3789166E-02	-0.3069729E-02	-0.2055897E-02	-0.3506208E-03
0.1476824E-02	0.2990977E-02	0.4091419E-02	0.5203276E-02	0.5468514E-02	0.5789572E-02	0.5437421E-02
0.5043575E-02	0.3349318E-02	-0.	0.3966273E-02	0.2856325E-02	0.1528856E-02	-0.2268146E-05
-0.	-0.	0.4176891E-04	-0.2736116E-02	-0.	-0.	-0.
-0.	0.3842963E-02	-0.7698722E-03	0.1091753E-01	0.1403552E-01	-0.	0.1668555E-01
0.1969722E-01	0.2348121E-01	0.2485774E-01	0.2365532E-01	0.1939434E-01	0.1375132E-01	0.8502229E-02
0.4969668E-02	0.5444364E-02	0.2405175E-01	-0.6484678E-02	-0.	-0.5624185E-02	-0.7656938E-02
0.1865080E-02	0.6703954E-02	0.8426621E-02	0.4257286E-02	-0.8319109E-03	-0.4131484E-02	-0.3541936E-02
0.5725883E-01	-0.2371278E-01	-0.	-0.2261904E-01	-0.2568269E-01	0.3015317E-02	0.1944451E-01
0.2757982E-01	0.1784768E-01	0.3746363E-02	-0.7451061E-02	-0.1181123E-01	-0.1935387E-01	0.6748685E-02
-0.	0.6551902E-02	0.6438186E-02	-0.3489381E-02	-0.6542113E-02	-0.8376792E-02	-0.3808713E-02
0.1695721E-02	0.4614340E-02	0.3929390E-02	-0.6080453E-01	0.2431758E-01	-0.	0.2038439E-01
0.2597669E-01	-0.1443420E-02	-0.1891111E-01	-0.2790975E-01	-0.1802874E-01	-0.3872280E-02	0.6627049E-02
0.1139147E-01	-0.2464464E-01	0.9368650E-02	0.	0.8550445E-02	0.9735772E-02	-0.3357851E-02
-0.1174295E-01	-0.1504991E-01	-0.8890717E-02	-0.9498122E-03	0.5015862E-02	0.7119740E-02	0.6918283E-01
-0.1549921E-01	0.	-0.1512297E-01	-0.2302247E-01	0.5060676E-02	0.2230500E-01	0.2899861E-01
0.1548074E-01	-0.1594710E-02	-0.1224735E-01	-0.1259187E-01	0.3452242E-01	-0.8424501E-02	0.
-0.7062285E-02	-0.1151918E-01	0.2695801E-02	0.1190026E-01	0.1590886E-01	0.9623384E-02	0.1141211E-02
-0.5188025E-02	-0.7206220E-02	-0.5844155E-01	0.1744450E-01	0.	0.1613969E-01	0.2070494E-01
-0.5879792E-02	-0.2196847E-01	-0.2861689E-01	-0.1479019E-01	0.1496575E-02	0.1171254E-01	0.1250733E-01
-0.4812406E-00	-0.3761101E-00	-0.2922808E-00	-0.2060968E-00	-0.1422713E-00	-0.1191320E-00	-0.7666504E-01
-0.4512433E-01	-0.2168277E-01	-0.1095829E-01	0.1148837E-02	0.6787092E-02	0.1531494E-01	0.2624633E-01
0.3476281E-01	0.4340706E-01	0.7933349E-01	0.4256314E-01	0.4076326E-01	0.3599297E-01	0.3028012E-01
0.2170727E-01	0.1852924E-01	0.	0.2336866E-01	0.9964847E-02	-0.1056267E-02	-0.1200181E-01
-0.1831282E-04	0.	-0.2668565E-04	0.5014456E-02	0.	0.	0.
0.	0.2103121E-00	0.1171013E-00	0.3917962E-01	-0.7057842E-01	0.	-0.1239569E-00
-0.1415430E-00	-0.8278426E-01	0.4844033E-02	0.6995496E-01	0.7242909E-01	0.3414011E-01	-0.5326716E-02
-0.1932620E-01	-0.8646146E-01	-0.9316448E-02	-0.8138086E-01	0.2292550E-14	-0.8043473E-01	-0.8510050E-01
-0.4882205E-01	-0.7684407E-02	0.3590856E-01	0.5582630E-01	0.5281136E-01	0.2840956E-01	0.1083591E-02
-0.1561663E-01	0.3050311E-01	0.7058759E-15	0.3019646E-01	0.4045609E-01	0.2812628E-01	0.1108064E-01
-0.8145085E-02	-0.1841495E-01	-0.1941047E-01	-0.1122669E-01	-0.4778047E-03	-0.2803882E-01	0.7134824E-01
0.2769825E-14	0.7014561E-01	0.8462933E-01	0.4874456E-01	0.5653571E-02	-0.3859698E-01	-0.5712253E-01
-0.5188840E-01	-0.2598300E-01	0.2069755E-02	-0.2097934E-01	-0.4081203E-01	0.6572913E-15	-0.4050709E-01
-0.4060282E-01	-0.2823263E-01	-0.1314560E-01	0.5928430E-02	0.1759196E-01	0.2054666E-01	0.1388199E-01
0.3676567E-02	-0.1051823E-01	-0.8215749E-01	-0.5256640E-16	-0.8090143E-01	-0.8848853E-01	-0.5163634E-01
-0.7417483E-02	0.3773666E-01	0.5743600E-01	0.5483920E-01	0.3388741E-01	0.8050696E-02	-0.1433678E-01
-0.3510787E-01	0.2870268E-14	-0.3418316E-01	-0.2782983E-01	-0.3844975E-02	0.2026360E-01	0.4115584E-01
0.4715815E-01	0.4033137E-01	0.2380401E-01	0.5909847E-02	-0.2130840E-01	0.7018002E-01	0.4478400E-14
0.6952405E-01	0.9056970E-01	0.5958357E-01	0.1589958E-01	-0.3038314E-01	-0.5076247E-01	-0.4855900E-01
-0.2847600E-01	-0.4177102E-02	-0.1153979E-01	0.4956945E-01	-0.2224661E-13	0.4748193E-01	0.3518464E-01
-0.2058187E-02	-0.3211549E-01	-0.5077825E-01	-0.5181276E-01	-0.4078845E-01	-0.2188809E-01	-0.3257075E-02
-0.4493303E-03	-0.3144707E-03	-0.1774053E-03	-0.1774042E-03	-0.1601409E-02	0.1314811E-03	-0.2086638E-01
-0.2115949E-01	-0.6126099E-01	-0.6189462E-01	0.1997594E-01	0.2037885E-01	0.6195963E-01	0.6265081E-01
0.3186907E-01	0.2651235E-01	-0.8309050E-01	-0.5803455E-01	-0.3087700E-01	-0.2637590E-01	0.8437772E-01
0.5819449E-01	0.1385752E-03	-0.2747433E-03	-0.2884400E-04	0.1490201E-04	-0.8036292E-02	0.1390411E-01
-0.1058166E-00	-0.1089850E-03	-0.1146175E-02	0.4117586E-04	-0.2199053E-01	-0.9636679E-01	0.5418684E-02
-0.3542528E-03	-0.2574949E-03	0.9823372E-03	0.7912217E-02	-0.1545666E-01	0.1066933E-00	0.1397212E-03
0.1125453E-02	-0.3572140E-04	0.2293059E-01	0.9537122E-01	-0.3963801E-02	0.3835243E-03	0.2439917E-03
-0.1000152E-02	0.6991639E-02	-0.8089777E-01	0.2194512E-02	0.2206988E-03	-0.1441694E-03	-0.7437827E-03
-0.8785401E-01	-0.1023141E-01	-0.2505556E-01	-0.1244997E-03	0.1129579E-02	-0.2592503E-03	-0.7251446E-02
0.8216506E-01	-0.1881043E-02	-0.2038339E-03	0.1370686E-03	0.7728008E-03	0.8809786E-01	0.1101084E-01
0.2533097E-01	0.1127443E-03	-0.1123502E-02	0.2617890E-03	-0.1457145E-03	0.1149153E-02	0.2726215E-02
0.5629705E-02	0.9621311E-02	0.1126543E-01	0.2113704E-01	0.2475405E-01	0.2909831E-01	0.3556676E-01
-0.4221638E-03						

SA-8 RUN #3 MODE 1 XN = 30 81018

0.1870853E-03	0.1720704E-03	0.1593365E-03	0.1461294E-03	0.1347045E-03	0.1302437E-03	0.1227236E-03
0.1160771E-03	0.1098901E-03	0.1067730E-03	0.1018634E-03	0.9730270E-04	0.9194197E-04	0.8270166E-04
0.7477211E-04	0.6587350E-04	0.5969476E-04	0.5414215E-04	0.5098615E-04	0.4817798E-04	0.4550773E-04
0.4306658E-04	0.4050104E-04	-0.	0.4190174E-04	0.3825895E-04	0.3593776E-04	0.3366507E-04
-0.	-0.	-0.3720247E-04	0.2711157E-04	-0.	-0.	-0.
-0.	-0.4412849E-04	-0.4409373E-04	-0.4325760E-04	-0.4245410E-04	-0.	-0.4161117E-04
-0.4029825E-04	-0.3716799E-04	-0.3298415E-04	-0.2663391E-04	-0.1783417E-04	-0.8332260E-05	0.1049382E-05
0.9731257E-05	0.1908205E-04	0.1796067E-01	0.1539916E-01	-0.	0.1529461E-01	0.1277332E-01
0.1006208E-01	0.7219676E-02	0.4367067E-02	0.1409335E-02	-0.1600026E-02	-0.4645284E-02	-0.7710007E-02
0.4343008E-01	0.3715386E-01	-0.	0.3689807E-01	0.3073188E-01	0.2412067E-01	0.1721576E-01
0.1331217E-01	0.3179873E-02	-0.4053138E-02	-0.1135181E-01	-0.1868341E-01	-0.1795550E-01	-0.1538715E-01
-0.	-0.1528224E-01	-0.1275562E-01	-0.1004061E-01	-0.7196396E-02	-0.4344591E-02	-0.1389687E-02
0.1415023E-02	0.4653967E-02	0.7711458E-02	-0.4342957E-01	-0.3715382E-01	-0.	-0.3689862E-01
-0.3073292E-01	-0.2412184E-01	-0.1721732E-01	-0.1031367E-01	-0.3180840E-02	0.4052890E-02	0.1135223E-01
0.1868478E-01	-0.1799789E-01	-0.1536095E-01	0.	-0.1525425E-01	-0.1267545E-01	-0.9926635E-02
-0.7067697E-02	-0.4215622E-02	-0.1270931E-02	0.1714604E-02	0.4726691E-02	0.7751747E-02	0.4338186E-01
0.3706352E-01	0.	0.3680701E-01	0.3061970E-01	0.2401489E-01	0.1713354E-01	0.1025805E-01
0.3149010E-02	-0.4067317E-02	-0.1135372E-01	-0.1867450E-01	0.1801509E-01	0.1539257E-01	0.
0.1528649E-01	0.1271896E-01	0.9978263E-02	0.7121954E-02	0.4267424E-02	0.1315117E-02	-0.1682556E-02
-0.4710287E-02	-0.7752999E-02	-0.4336433E-01	-0.3704352E-01	0.	-0.3678726E-01	-0.3059827E-01
-0.2399194E-01	-0.1711022E-01	-0.1023533E-01	-0.3127540E-02	0.4086280E-02	0.1136937E-01	0.1868650E-01
0.1736396E-00	0.1659961E-00	0.1594365E-00	0.1524447E-00	0.1462081E-00	0.1436895E-00	0.1395233E-00
0.1356454E-00	0.1319134E-00	0.1299938E-00	0.1262301E-00	0.1226305E-00	0.1182532E-00	0.1106301E-00
0.1038925E-00	0.9622665E-01	0.9034929E-01	0.8551436E-01	0.8231773E-01	0.7915548E-01	0.7602103E-01
0.7290916E-01	0.6981002E-01	0.	0.7160515E-01	0.6671923E-01	0.6363532E-01	0.6055925E-01
-0.1221696E-06	0.	-0.6966744E 00	0.5311670E-01	0.	0.	0.
0.	0.4746836E-01	0.5135864E-01	0.4282841E-01	0.3991591E-01	0.	0.3735090E-01
0.3307643E-01	0.2820263E-01	0.2228419E-01	0.1500493E-01	0.6341476E-02	-0.2376035E-02	-0.1111633E-01
-0.1985851E-01	-0.3193043E-01	0.4330964E-01	0.3686602E-01	0.7802713E-17	0.3660383E-01	0.3029172E-01
0.2355737E-01	0.1656902E-01	0.9630387E-02	0.2517611E-02	-0.4633375E-02	-0.1177217E-01	-0.1884848E-01
-0.1790639E-01	-0.1527742E-01	0.1807454E-16	-0.1517055E-01	-0.1259104E-01	-0.9827645E-02	-0.6944599E-02
-0.4066724E-02	-0.1106265E-02	0.1871991E-02	0.4838919E-02	0.7774822E-02	-0.4324865E-01	-0.3673143E-01
0.7212459E-17	-0.3646839E-01	-0.3010390E-01	-0.2333821E-01	-0.1634106E-01	-0.9412841E-02	-0.2328934E-02
0.4773644E-02	0.1184764E-01	0.1886129E-01	0.1786132E-01	0.1513280E-01	0.1331927E-18	0.1502285E-01
0.1236314E-01	0.9547216E-02	0.6651167E-02	0.3799720E-02	0.8949818E-03	-0.2016072E-02	-0.4924070E-02
-0.7816669E-02	0.4311229E-01	0.3641186E-01	0.6182337E-17	0.3614685E-01	0.2969948E-01	0.2293037E-01
0.1599547E-01	0.9168419E-02	0.2195819E-02	-0.4811452E-02	-0.1183162E-01	-0.1884336E-01	0.1791109E-01
0.1514223E-01	0.1330644E-17	0.1503266E-01	0.1236619E-01	0.9562939E-02	0.6687027E-02	0.3852366E-02
0.9540713E-03	-0.1962887E-02	-0.4889419E-02	-0.7813602E-02	-0.4309745E-01	-0.3639660E-01	0.6533515E-17
-0.3613222E-01	-0.2969282E-01	-0.2293498E-01	-0.1600648E-01	-0.9177212E-02	-0.2196885E-02	0.4815806E-02
0.1183191E-01	0.1883326E-01	-0.1789312E-01	-0.1511305E-01	0.1891468E-18	-0.1500383E-01	-0.1233328E-01
-0.9529397E-02	-0.6651971E-02	-0.3813398E-02	-0.9110538E-03	0.2002686E-02	0.4912669E-02	0.7813070E-02
0.5387542E-05	0.5382582E-05	0.5377885E-05	0.5377885E-03	-0.4302884E-05	-0.1584830E-05	-0.3902113E-02
-0.3701543E-02	-0.9450000E-02	-0.9448573E-02	0.3904439E-02	0.3903740E-02	0.9446032E-02	0.9444320E-02
0.3861842E-02	0.3909477E-02	-0.9315798E-02	-0.9422387E-02	-0.3849805E-02	-0.3893754E-02	0.9306562E-02
0.9405235E-02	-0.9480741E-06	-0.1012782E-03	-0.6419302E-07	-0.7514471E-10	-0.6487102E-02	0.3913555E-04
-0.3675068E-01	-0.2225117E-06	-0.1024960E-03	-0.2668784E-06	-0.7351146E-02	-0.3670666E-01	-0.1509229E-04
-0.3359422E-06	-0.7988919E-07	0.1013483E-03	0.6482309E-02	-0.2287831E-04	0.3671114E-01	-0.7739448E-07
0.1018039E-03	-0.2888534E-06	0.7368072E-02	0.3672536E-01	-0.3221567E-05	0.1090922E-06	-0.5259281E-07
-0.1018925E-03	0.1263294E-04	-0.3613233E-01	0.2214269E-03	-0.1010028E-03	0.1651632E-06	-0.2105915E-05
-0.3612121E-01	-0.3924573E-04	-0.4226712E-02	-0.4459718E-06	0.1017847E-03	-0.4118268E-06	0.3139647E-05
0.3612628E-01	-0.2229852E-03	0.1011833E-03	-0.3130365E-06	0.2667845E-05	0.3610741E-01	0.3222897E-04
0.4223108E-02	0.3211309E-06	-0.1017194E-03	0.7446080E-06	0.2661982E-01	0.2544460E-01	0.2449888E-01
0.2354809E-01	0.2240044E-01	0.1172019E-00	0.1122504E-00	0.1080910E-00	0.1038259E-00	0.9865112E-01
0.5390496E-05						

SA-8 RUN #3 MODE 2 XN = 28.22817

0.9249007E-01	0.9134991E-01	0.9026787E-01	0.8896901E-01	0.8758510E-01	0.8693875E-01	0.8603084E-01
0.8496487E-01	0.8380083E-01	0.8318352E-01	0.8139452E-01	0.7961667E-01	0.7735921E-01	0.7337495E-01
0.6975631E-01	0.6552222E-01	0.6245190E-01	0.5930164E-01	0.5727377E-01	0.5514866E-01	0.5294899E-01
0.5068589E-01	0.4840444E-01	0.	0.4973907E-01	0.4608466E-01	0.4374675E-01	0.4138959E-01
0.	0.	-0.7310512E 00	0.3570684E-01	0.	0.	0.
0.	0.6460561E-01	0.6850294E-01	0.5958755E-01	0.5633819E-01	0.	0.5343750E-01
0.4965948E-01	0.4261589E-01	0.3513366E-01	0.2543786E-01	0.1332786E-01	0.7522363E-03	-0.1195555E-01
-0.2457303E-01	-0.4136592E-01	0.4955128E-01	0.2608551E-01	0.	0.2527011E-01	0.4845495E-02
-0.1295023E-01	-0.2645375E-01	-0.3513510E-01	-0.3950543E-01	-0.3989792E-01	-0.3693548E-01	-0.3177471E-01
-0.1599801E-01	0.7538169E-02	0.	0.8303873E-02	0.2784725E-01	0.4328323E-01	0.5267833E-01
0.5568925E-01	0.5288403E-01	0.4488797E-01	0.3260125E-01	0.1755170E-01	-0.5138255E-01	-0.3148669E-01
0.	-0.3078697E-01	-0.1320217E-01	0.2561849E-02	0.1518461E-01	0.2411147E-01	0.2980923E-01
0.3246303E-01	0.3253502E-01	0.3091251E-01	0.1610143E-01	-0.6960270E-02	0.	-0.7708396E-02
-0.2590026E-01	-0.4212658E-01	-0.5147286E-01	-0.5464157E-01	-0.5212491E-01	-0.4453157E-01	-0.3272614E-01
-0.1820177E-01	0.5968013E-01	0.5149953E-01	-0.	0.5116004E-01	0.4302453E-01	0.3424056E-01
0.2509886E-01	0.1598045E-01	0.6732333E-02	-0.2477659E-02	-0.1161462E-01	-0.2069243E-01	0.2004516E-01
0.1353105E-01	-0.	0.1328881E-01	0.7330071E-02	0.1642440E-02	-0.3351550E-02	-0.7414272E-02
-0.1062009E-01	-0.1297127E-01	-0.1458676E-01	-0.1572394E-01	-0.6318824E-01	-0.6264256E-01	-0.
-0.6254055E-01	-0.6054797E-01	-0.5625397E-01	-0.4908208E-01	-0.3928362E-01	-0.2677585E-01	-0.1208833E-01
0.4239370E-02	0.2150984E-01	-0.2148443E-01	-0.1673651E-01	-0.	-0.1655557E-01	-0.1212651E-01
-0.7758683E-02	-0.3695744E-02	-0.1646416E-03	0.2972244E-02	0.5679059E-02	0.8017764E-02	0.1011842E-01
0.4232141E-02	0.3759501E-02	0.3359635E-02	0.2943783E-02	0.2585000E-02	0.2446345E-02	0.2205499E-02
0.1996178E-02	0.1802696E-02	0.1704582E-02	0.1554886E-02	0.1412911E-02	0.1248164E-02	0.9636866E-03
0.7191313E-03	0.4508243E-03	0.1465084E-03	0.9068322E-04	-0.2561279E-05	-0.8619286E-04	-0.1621946E-03
-0.2325622E-03	-0.2945827E-03	-0.	-0.2566265E-03	-0.3585426E-03	-0.4215118E-03	-0.4825089E-03
-0.2932538E-04	-0.	0.7158125E-04	-0.6207359E-03	-0.	-0.	-0.
-0.	-0.2736081E-02	-0.2477158E-02	-0.3049064E-02	-0.3215243E-02	-0.	-0.3361496E-02
-0.3542299E-02	-0.3825406E-02	-0.4018958E-02	-0.4093981E-02	-0.3934625E-02	-0.3537513E-02	-0.2997872E-02
-0.2364336E-02	-0.1677327E-02	-0.4413131E-01	-0.6153731E-01	-0.2998721E-14	-0.6191577E-01	-0.7332883E-01
-0.7845947E-01	-0.7684363E-01	-0.6943367E-01	-0.5666715E-01	-0.3864673E-01	-0.1650555E-01	0.4464760E-02
-0.5230136E-01	-0.2263542E-01	-0.2311098E-14	-0.2159705E-01	0.4126125E-02	0.2511134E-01	0.3805399E-01
0.4245512E-01	0.4075191E-01	0.3663996E-01	0.3425752E-01	0.3467377E-01	0.1174260E-01	-0.7149174E-02
-0.3537774E-15	-0.7670119E-02	-0.2199988E-01	-0.3231063E-01	-0.3828093E-01	-0.4033057E-01	-0.3851609E-01
-0.3213519E-01	-0.2141758E-01	-0.1068785E-01	0.6645196E-01	0.8745680E-01	0.5224897E-16	0.8801598E-01
0.1029728E-00	0.1092577E-00	0.1035528E-00	0.8657810E-01	0.6124564E-01	0.3274317E-01	0.6755126E-02
-0.1410292E-01	0.1621483E-01	0.1474023E-01	-0.3792966E-15	0.1479654E-01	0.1491086E-01	0.1489053E-01
0.1289127E-01	0.8302279E-02	0.1908254E-02	-0.4036470E-02	-0.7446673E-02	-0.8974440E-02	-0.6655339E-01
-0.6039796E-01	-0.7960240E-16	-0.6006206E-01	-0.5272320E-01	-0.4397901E-01	-0.3495180E-01	-0.2641960E-01
-0.1741838E-01	-0.6445636E-02	0.7685699E-02	0.2327239E-01	-0.2798524E-01	-0.2369946E-01	-0.6216399E-15
-0.2339039E-01	-0.1727212E-01	-0.1044454E-01	-0.4859878E-02	-0.1502762E-02	0.4885289E-03	0.3031705E-02
0.7932227E-02	0.1432220E-01	0.5355527E-01	0.4685352E-01	0.3611656E-16	0.4661405E-01	0.4039571E-01
0.3318625E-01	0.2395571E-01	0.1276943E-01	0.5752554E-03	-0.1018772E-01	-0.1747149E-01	-0.2223834E-01
-0.4146580E-04	-0.3988734E-04	-0.3839113E-04	-0.3839112E-04	0.6309336E-04	0.5472645E-04	-0.1325911E-01
-0.1324838E-01	0.6275136E-02	0.6272668E-02	0.1181829E-01	0.1181361E-01	-0.4823938E-02	-0.4819149E-02
-0.1342217E-01	-0.1640601E-01	-0.1945271E-02	-0.7831591E-03	0.8562806E-02	0.8468391E-02	0.6830447E-02
0.8762217E-02	0.3593024E-04	0.4303988E-05	0.1372780E-03	-0.2366964E-07	-0.8824117E-02	-0.5270010E-01
0.8920341E-02	0.7486085E-04	0.1840573E-03	0.2761525E-03	0.4503448E-02	-0.6500120E-02	0.5328904E-01
0.5858348E-04	0.1820342E-03	0.1376572E-03	0.1066403E-01	0.4370375E-01	0.1145869E-01	0.7686753E-04
0.1711509E-03	-0.4446703E-06	-0.1347315E-01	-0.3740096E-02	-0.4326445E-01	0.5859745E-04	-0.1009810E-03
0.1375909E-03	-0.5097619E-01	0.6903140E-04	-0.6079961E-02	-0.3930445E-04	0.1791732E-03	-0.1416321E-03
0.1886654E-02	0.4924977E-01	0.2424233E-03	0.1777774E-03	-0.2237437E-04	-0.7089592E-04	0.4314648E-01
0.3121051E-02	0.5651571E-02	-0.5056110E-04	-0.9911737E-04	-0.1362425E-03	0.4455039E-02	-0.4543929E-01
0.2630200E-03	-0.1120059E-03	-0.6374210E-06	-0.9504935E-04	0.7671075E-01	0.7383636E-01	0.7156359E-01
0.6923256E-01	0.6666965E-01	-0.1599758E-01	-0.1540003E-01	-0.1502068E-01	-0.1473791E-01	-0.1444400E-01
-0.4292564E-04						

SA-8 RUN #3 MODE 3 XN = 3.591644

0.6172435E-01	0.5229425E-01	0.4449279E-01	0.3647411E-01	0.2988613E-01	0.2742251E-01	0.2308054E-01
0.1354891E-01	0.1645575E-01	0.1496538E-01	0.1303820E-01	0.1136353E-01	0.9500812E-02	0.6360035E-02
0.3684630E-02	0.8442701E-03	-0.1120773E-02	-0.2860264E-02	-0.3773425E-02	-0.4567391E-02	-0.5250442E-02
-0.5954706E-02	-0.6389760E-02	-0.	-0.6070995E-02	-0.6939425E-02	-0.7446270E-02	-0.7926506E-02
-0.	-0.	0.5153176E-03	-0.9082203E-02	-0.	-0.	-0.
-0.	0.2380553E-02	0.2809872E-02	0.1714562E-02	0.1330792E-02	-0.	0.9973706E-03
0.5363686E-03	-0.7578854E-04	-0.5946522E-03	-0.9777788E-03	-0.1047039E-02	-0.7636943E-03	-0.3185978E-03
0.1550302E-03	0.2414475E-03	0.3786467E-02	-0.1157369E-02	-0.	-0.1368401E-02	-0.5664795E-02
-0.9198011E-02	-0.1117200E-01	-0.1182108E-01	-0.1092754E-01	-0.9045629E-02	-0.6434451E-02	-0.3317105E-02
0.5475901E-01	0.1411029E-00	-0.	0.1437871E-00	0.2128024E-00	0.2625633E-00	0.2855618E-00
0.2806721E-00	0.2505222E-00	0.1977829E-00	0.1262172E-00	0.4231171E-01	-0.7079845E-02	-0.7767633E-02
-0.	-0.7830873E-02	-0.8245710E-02	-0.8373248E-02	-0.7779620E-02	-0.7002354E-02	-0.5740667E-02
-0.4493359E-02	-0.3417567E-02	-0.2400117E-02	0.4364384E-01	0.1423902E-00	-0.	0.1454377E-00
0.2745321E-00	0.2821655E-00	0.3098796E-00	0.3065699E-00	0.2749601E-00	0.2181010E-00	0.1402382E-00
0.4859740E-01	-0.6260549E-03	-0.4035465E-03	0.	-0.4031463E-03	-0.1428730E-03	0.5269342E-04
0.1767589E-03	-0.1625695E-03	-0.4645563E-03	-0.5938473E-03	-0.1166821E-03	0.1009745E-02	0.5095370E-02
-0.6579412E-02	0.	-0.7021268E-02	-0.1663058E-01	-0.2395215E-01	-0.2790446E-01	-0.2881790E-01
-0.2653758E-01	-0.2153326E-01	-0.1385145E-01	-0.4008281E-02	0.1624560E-02	0.2012207E-02	0.
0.1994902E-02	0.2197063E-02	0.2148966E-02	0.2063677E-02	0.1313426E-02	0.5154005E-03	-0.2513012E-03
-0.5404523E-03	-0.2425893E-03	-0.5954214E-02	0.2768487E-02	0.	0.3053195E-02	0.1063153E-01
0.1710709E-01	0.2153949E-01	0.2293706E-01	0.2158211E-01	0.1755304E-01	0.1183476E-01	0.5561139E-02
-0.1314550E-01	-0.1308810E-01	-0.1295711E-01	-0.1283712E-01	-0.1269189E-01	-0.1257061E-01	-0.1246359E-01
-0.1229241E-01	-0.1208404E-01	-0.1196455E-01	-0.1176563E-01	-0.1149173E-01	-0.1121667E-01	-0.1071018E-01
-0.1035499E-01	-0.9866520E-02	-0.9112149E-02	-0.9276316E-02	-0.9184933E-02	-0.8994491E-02	-0.8977066E-02
-0.8955170E-02	-0.8950334E-02	0.	-0.8986905E-02	-0.8920190E-02	-0.8886794E-02	-0.8927564E-02
-0.1000465E-04	0.	0.6012078E-03	-0.8943034E-02	0.	0.	0.
0.	0.1040677E-01	0.1078139E-01	0.1056183E-01	0.1082575E-01	0.	0.1099838E-01
0.1110343E-01	0.1092706E-01	0.1031329E-01	0.9097671E-02	0.7176073E-02	0.4931224E-02	0.2562034E-02
0.1916101E-03	-0.3143458E-02	0.2416308E-01	0.1688195E-01	-0.8981372E-13	0.1660499E-01	0.1026265E-01
0.9487989E-02	0.1938652E-01	0.3013134E-01	0.2206878E-01	-0.5189784E-02	-0.9118802E-02	0.3717389E-01
0.5277443E-02	-0.9066652E-02	-0.7096656E-13	-0.9584638E-02	-0.2228023E-01	-0.2773878E-01	-0.1874734E-01
-0.4049117E-02	-0.4556750E-02	-0.2335679E-01	-0.1973917E-01	0.3354923E-01	0.2805576E-02	-0.1317092E-01
-0.1064493E-13	-0.1367777E-01	-0.2615740E-01	-0.3005879E-01	-0.1950889E-01	-0.4450381E-02	-0.5283982E-02
-0.2349399E-01	-0.1808320E-01	0.3601385E-01	0.2449047E-01	0.2037679E-01	0.1590963E-14	0.2013602E-01
0.1478853E-01	0.1303531E-01	0.2121340E-01	0.3112241E-01	0.2292456E-01	-0.5013778E-02	-0.1028296E-01
0.3532154E-01	0.2590474E-01	0.1352920E-01	-0.1136004E-13	0.1314374E-01	0.1964879E-02	-0.1904632E-02
0.5128569E-02	0.1497983E-01	0.1126193E-01	-0.8554287E-02	-0.1183427E-01	0.2546275E-01	0.1853125E-01
0.7665349E-02	-0.1961336E-14	0.7241222E-02	-0.2998903E-02	-0.6643311E-02	0.5660800E-03	0.1168623E-01
0.1008286E-01	-0.8220195E-02	-0.1147937E-01	0.2558185E-01	0.4839644E-02	-0.6645876E-02	-0.1933778E-13
-0.7078040E-02	-0.1766674E-01	-0.2065879E-01	-0.1219409E-01	0.3388972E-04	-0.5077624E-03	-0.1645518E-01
-0.1578877E-01	0.2485451E-01	0.1546316E-01	0.5379066E-02	0.9980226E-15	0.4985606E-02	-0.4076211E-02
-0.6680499E-02	0.1066228E-02	0.1231992E-01	0.1051945E-01	-0.7932917E-02	-0.1098309E-01	0.2683934E-01
0.3352398E-03	0.3346193E-03	0.3345911E-03	0.3345911E-03	-0.1480570E-02	-0.7629611E-03	-0.5667596E-03
-0.5850501E-03	-0.1898350E-02	-0.1952073E-02	0.1946718E-02	0.1939544E-02	0.2494298E-02	0.2407044E-02
0.3946277E-03	0.1040351E-02	-0.1842142E-02	-0.2542484E-02	0.1829470E-03	-0.7787626E-04	0.1931480E-02
0.2715842E-02	-0.5511167E-04	-0.2847525E-04	0.2894480E-05	-0.2484118E-06	-0.1192416E-01	0.5361619E-02
0.4171822E-02	0.9117734E-03	0.7846190E-03	0.2982523E-03	-0.1168954E-01	0.1327611E-03	0.9143611E-02
0.9105787E-03	0.8298877E-03	0.3433372E-03	-0.7560465E-02	0.4384070E-02	0.1334211E-01	0.9105708E-03
0.8459839E-03	0.2939716E-03	-0.8467257E-02	0.9273849E-02	0.9691864E-02	0.9126324E-03	0.8194896E-03
0.2330832E-03	-0.4839648E-03	0.3319033E-02	0.1969518E-02	-0.2634434E-04	0.1299845E-04	-0.3860125E-03
-0.4368607E-02	0.7557546E-02	0.1080186E-02	0.1050975E-04	0.2265550E-04	-0.4356412E-03	-0.1195841E-02
0.1182007E-01	0.1684071E-02	0.2863993E-04	0.1828718E-04	-0.3998344E-03	0.4125819E-02	0.8338246E-02
0.3475944E-02	0.1826463E-04	-0.4413939E-04	-0.4044105E-03	0.7614774E-02	0.5534941E-02	0.3885328E-02
0.2266806E-02	0.4077567E-03	-0.1333952E-01	-0.1288892E-01	-0.1232532E-01	-0.1155066E-01	-0.1049070E-01
0.3217511E-03						

SA-8 RUN #3 MODE 4 XN = 3 586875

0.3134684E-00	0.2731840E-00	0.2395635E-00	0.2047568E-00	0.1756418E-00	0.1645759E-00	0.1451163E-00
0.1288103E-00	0.1141590E-00	0.1068956E-00	0.9673668E-01	0.8763963E-01	0.7726498E-01	0.5960619E-01
0.4450449E-01	0.2818299E-01	0.1689177E-01	0.6869232E-02	0.1473280E-02	-0.3264726E-02	-0.7435659E-02
-0.1117348E-01	-0.1465321E-01	0.	-0.1265231E-01	-0.1805353E-01	-0.2126727E-01	-0.2434490E-01
0.	0.	0.1346707E-02	-0.3181753E-01	0.	0.	0.
0.	-0.5114132E-02	-0.4701483E-02	-0.5296709E-02	-0.5339659E-02	0.	-0.5326024E-02
-0.5229363E-02	-0.4826130E-02	-0.4153402E-02	-0.3055720E-02	-0.1515010E-02	0.1002765E-03	0.1590370E-02
0.2790588E-02	0.3791769E-02	0.5585468E-03	0.1963006E-01	0.	0.2010309E-01	0.3528532E-01
0.4639644E-01	0.5238816E-01	0.5207453E-01	0.4679351E-01	0.3650095E-01	0.2240947E-01	0.6378082E-02
-0.7248727E-02	-0.8741511E-02	0.	-0.8696020E-02	-0.9990115E-02	-0.1111384E-01	-0.1129712E-01
-0.1190257E-01	-0.1180300E-01	-0.1193195E-01	-0.1266215E-01	-0.1402465E-01	0.2275694E-02	-0.1014737E-01
0.	-0.1067542E-01	-0.2077543E-01	-0.2866891E-01	-0.3252459E-01	-0.3354484E-01	-0.3076230E-01
-0.2506295E-01	-0.1663766E-01	-0.5854351E-02	-0.5961211E-02	-0.3040422E-01	0.	-0.3112177E-01
-0.5071801E-01	-0.6471077E-01	-0.7022466E-01	-0.6856257E-01	-0.5942503E-01	-0.4452238E-01	-0.2515245E-01
-0.3250932E-02	-0.4901912E-02	-0.1306766E-01	-0.	-0.1333146E-01	-0.1948682E-01	-0.2347623E-01
-0.2417988E-01	-0.2276527E-01	-0.1815857E-01	-0.1119779E-01	-0.2302877E-02	0.7562270E-02	-0.1610105E-02
0.1629260E-01	-0.	0.1693156E-01	0.3129805E-01	0.4205878E-01	0.4733198E-01	0.4600018E-01
0.3970515E-01	0.2917430E-01	0.1621964E-01	0.2467150E-02	0.3377951E-02	0.9393204E-02	-0.
0.9519200E-02	0.1440771E-01	0.1802702E-01	0.2043435E-01	0.1994322E-01	0.1781930E-01	0.1380256E-01
0.8326243E-02	0.1809023E-02	-0.2119555E-02	-0.2792620E-01	-0.	-0.2882232E-01	-0.5033137E-01
-0.6724113E-01	-0.7656777E-01	-0.7860203E-01	-0.7155739E-01	-0.5601084E-01	-0.3233647E-01	-0.2926052E-02
0.1075183E-00	0.9568762E-01	0.8584177E-01	0.7540356E-01	0.6641354E-01	0.6303889E-01	0.5690088E-01
0.5162055E-01	0.4676220E-01	0.4426419E-01	0.4018962E-01	0.3660422E-01	0.3220122E-01	0.2470374E-01
0.1801617E-01	0.1090008E-01	0.3005251E-02	0.1376179E-02	-0.1262219E-02	-0.3300939E-02	-0.5556669E-02
-0.7580152E-02	-0.9515322E-02	-0.	-0.8488022E-02	-0.1132180E-01	-0.1304668E-01	-0.1490454E-01
0.1278870E-03	-0.	0.1517720E-02	-0.1908083E-01	-0.	-0.	-0.
-0.	-0.1284660E-01	-0.9130609E-02	-0.1446453E-01	-0.1440641E-01	-0.	-0.1439316E-01
-0.1442938E-01	-0.1456083E-01	-0.1460401E-01	-0.1441070E-01	-0.1391734E-01	-0.1327001E-01	-0.1241463E-01
-0.1115883E-01	-0.8413329E-02	0.3093200E-01	0.3736767E-02	-0.2109680E-12	0.3064042E-02	-0.1579196E-01
-0.1772791E-01	-0.8800230E-02	-0.1157182E-01	-0.5480031E-01	-0.1026243E-00	-0.4379625E-01	0.1319450E-00
0.5470719E-01	0.4248464E-01	-0.1667622E-12	0.4215619E-01	0.3280386E-01	0.3539408E-01	0.5210428E-01
0.5437637E-01	0.1057744E-01	-0.4825446E-01	-0.8603271E-02	0.1503379E-00	0.5372611E-01	0.3901777E-01
-0.2449452E-13	0.3867503E-01	0.2926290E-01	0.3102784E-01	0.4281451E-01	0.3660120E-01	-0.1291955E-01
-0.6339861E-01	-0.1654058E-01	0.1551810E-00	0.2806001E-01	-0.4541766E-02	0.3309663E-14	-0.5364934E-02
-0.2902930E-01	-0.3382433E-01	-0.1608925E-01	-0.5344119E-02	-0.3543110E-01	-0.7807445E-01	-0.2353168E-01
0.1453545E-00	0.3003920E-01	-0.9747873E-02	-0.2656363E-13	-0.1122227E-01	-0.4887306E-01	-0.6135908E-01
-0.4023050E-01	-0.1200667E-01	-0.1382328E-01	-0.3798735E-01	-0.5344078E-02	0.1119872E-00	0.4558307E-01
0.1015232E-01	-0.4697480E-14	0.8409862E-02	-0.2894301E-01	-0.4424308E-01	-0.2648561E-01	0.3749639E-03
-0.2454838E-02	-0.3023622E-01	-0.3380328E-02	0.1113159E-00	0.5699705E-01	0.2731653E-01	-0.4514508E-13
0.2511648E-01	-0.1411187E-02	-0.5294171E-02	0.2012053E-01	0.4759787E-01	0.3970352E-01	0.5761153E-02
0.2713521E-01	0.1348931E-00	0.4290969E-01	0.9637078E-02	0.2385480E-14	0.8174212E-02	-0.2308590E-01
-0.3065147E-01	-0.5859202E-02	0.2577324E-01	0.2448985E-01	-0.4780469E-02	0.1838286E-01	0.1285865E-00
-0.3103216E-03	-0.3291346E-03	-0.3451238E-03	-0.3451237E-03	0.1947560E-03	0.2152390E-02	0.7957898E-03
0.7906129E-03	0.2766674E-02	0.2718043E-02	-0.2146237E-02	-0.2105630E-02	-0.2859187E-02	-0.2904581E-02
-0.3250745E-02	-0.3367399E-02	0.4467021E-03	0.3759055E-02	-0.7710825E-03	-0.2507984E-02	0.1570577E-02
-0.1533656E-04	0.8089301E-03	0.2747215E-04	-0.5135316E-05	0.3907846E-07	-0.2008540E-01	0.8972241E-01
-0.1772194E-00	0.3723028E-02	-0.1966958E-02	0.3251937E-02	-0.2218103E-01	0.7715646E-01	-0.1776653E-00
0.3714631E-02	-0.2091474E-02	0.3216480E-02	-0.2248484E-01	0.8075207E-01	-0.1615416E-00	0.3722789E-02
-0.2007832E-02	0.3236586E-02	-0.2649158E-01	0.9234670E-01	-0.1682446E-00	0.3720089E-02	-0.2054906E-02
0.3307592E-02	0.1462482E-02	0.4919512E-01	0.6650753E-02	0.8343894E-04	0.8523657E-04	-0.5117450E-03
-0.6379683E-02	0.5363457E-01	0.7287776E-02	0.1354799E-03	0.3629004E-04	-0.4630409E-03	-0.7758843E-02
0.6572983E-01	0.5723454E-02	0.4910802E-04	0.1111934E-03	-0.5516393E-03	0.7985974E-02	0.6236339E-01
0.5402170E-02	0.1676947E-03	0.7596603E-04	-0.4296885E-03	0.8753184E-01	0.7484411E-01	0.6447077E-01
0.5395713E-01	0.4138401E-01	0.1525374E-01	0.1334824E-01	0.1152403E-01	0.9399114E-02	0.6707910E-02
-0.2944061E-03						

SA-8 RUN #3 MODE 5 XN = 3.486045

0.8657241E-01	0.8062331E-01	0.7560323E-01	0.7036607E-01	0.6588212E-01	0.6414288E-01	0.6112325E-01
0.5949544E-01	0.5607579E-01	0.5484297E-01	0.5292429E-01	0.5115328E-01	0.4908168E-01	0.4552325E-01
0.4246372E-01	0.3909317E-01	0.3675825E-01	0.3470763E-01	0.3355284E-01	0.3252409E-01	0.3159643E-01
0.3075298E-01	0.2990773E-01	-0.	0.3036517E-01	0.2913923E-01	0.2839958E-01	0.2768690E-01
-0.	-0.	-0.3387550E-02	0.2590504E-01	-0.	-0.	-0.
-0.	-0.1692241E-01	-0.1818522E-01	-0.1467344E-01	-0.1319622E-01	-0.	-0.1183618E-01
-0.1001109E-01	-0.6498934E-02	-0.2731985E-02	0.2022432E-02	0.7557784E-02	0.1267414E-01	0.1714286E-01
0.2069142E-01	0.2458787E-01	-0.8402436E-02	-0.1548640E-01	-0.	-0.1569283E-01	-0.2115757E-01
-0.2475891E-01	-0.2583446E-01	-0.2438765E-01	-0.2062394E-01	-0.1485887E-01	-0.7478486E-02	0.9180223E-03
0.6932421E-01	0.1303373E-00	-0.	0.1321179E-00	0.1792439E-00	0.2104213E-00	0.2199057E-00
0.2078100E-00	0.1758266E-00	0.1267180E-00	0.6378109E-01	-0.7882456E-02	0.1061612E-02	-0.5983462E-02
-0.	-0.6212053E-02	-0.1205686E-01	-0.1666251E-01	-0.1944261E-01	-0.2027609E-01	-0.1931733E-01
-0.1573765E-01	-0.1279886E-01	-0.7975388E-02	-0.6949396E-01	-0.1308766E-00	-0.	-0.1326130E-00
-0.1799929E-00	-0.2113496E-00	-0.2209159E-00	-0.2087917E-00	-0.1766900E-00	-0.1273730E-00	-0.6414841E-01
0.7854373E-02	-0.2170613E-01	-0.6410104E-02	0.	-0.5858371E-02	0.7831599E-02	0.2032741E-01
0.3938759E-01	0.3738773E-01	0.4140690E-01	0.4250999E-01	0.4110198E-01	0.3805393E-01	0.1435564E-01
-0.2619810E-02	0.	-0.3220762E-02	-0.1804987E-01	-0.3097143E-01	-0.4047365E-01	-0.4592698E-01
-0.4744568E-01	-0.4525598E-01	-0.3994830E-01	-0.3264697E-01	0.2210120E-01	0.7084448E-02	0.
0.6545354E-02	-0.6925258E-02	-0.1926408E-01	-0.2927830E-01	-0.3631941E-01	-0.4048075E-01	-0.4181077E-01
-0.4069799E-01	-0.3798400E-01	-0.1338508E-01	0.5034734E-02	0.	0.5675395E-02	0.2167833E-01
0.3549380E-01	0.4544241E-01	0.5087263E-01	0.5190025E-01	0.4878789E-01	0.4220165E-01	0.3339841E-01
-0.1515519E-00	-0.1499781E-00	-0.1402374E-00	-0.1300736E-00	-0.1214220E-00	-0.1180736E-00	-0.1122352E-00
-0.1071825E-00	-0.1025524E-00	-0.1001946E-00	-0.9654227E-01	-0.9317509E-01	-0.8919725E-01	-0.8238240E-01
-0.7652251E-01	-0.7007121E-01	-0.6254097E-01	-0.6169006E-01	-0.5948770E-01	-0.5753745E-01	-0.5577122E-01
-0.5417510E-01	-0.5257512E-01	0.	-0.5344457E-01	-0.5111433E-01	-0.4971658E-01	-0.4836613E-01
-0.3226633E-05	0.	0.5394610E-02	-0.4492282E-01	0.	0.	0.
0.	0.2977626E-01	0.3184659E-01	0.2585633E-01	0.2323040E-01	0.	0.2081337E-01
0.1757094E-01	0.1133414E-01	0.4647583E-02	-0.3790183E-02	-0.1361490E-01	-0.2270319E-01	-0.3065792E-01
-0.3700376E-01	-0.4398775E-01	0.2726737E-01	0.1156459E-01	0.1324218E-14	0.1098885E-01	-0.3164467E-02
-0.1527291E-01	-0.2725357E-01	-0.3538777E-01	-0.4081342E-01	-0.4384204E-01	-0.4556659E-01	-0.4694650E-01
0.3095287E-02	0.1047353E-02	0.9699006E-15	0.9762809E-03	-0.8393438E-03	-0.2530230E-02	-0.3966965E-02
-0.4919346E-02	-0.5245198E-02	-0.5158277E-02	-0.5418774E-02	-0.6298997E-02	-0.2794223E-01	-0.1194337E-01
0.1572108E-15	-0.1136252E-01	0.3017340E-02	0.1620858E-01	0.2711571E-01	0.3534510E-01	0.4134869E-01
0.4500382E-01	0.4605648E-01	0.4532335E-01	-0.3831620E-02	-0.1603386E-02	-0.3299944E-16	-0.1526571E-02
0.4388287E-03	0.2133446E-02	0.3386114E-02	0.4305053E-02	0.5139439E-02	0.5748271E-02	0.5540128E-02
0.4531870E-02	0.2174117E-01	0.2071476E-01	0.1842453E-15	0.2056552E-01	0.1782673E-01	0.1325979E-01
0.7123524E-02	0.2280554E-03	-0.6858514E-02	-0.1362922E-01	-0.2012237E-01	-0.2628941E-01	0.2765957E-01
0.2513612E-01	0.4076804E-16	0.2595016E-01	0.2239337E-01	0.1664022E-01	0.8990589E-02	0.3862836E-03
-0.8527518E-02	-0.1709960E-01	-0.2527649E-01	-0.3299844E-01	-0.2204427E-01	-0.2043485E-01	0.3155812E-15
-0.2326762E-01	-0.1706011E-01	-0.1239700E-01	-0.6622318E-02	-0.1968912E-03	0.6800856E-02	0.1380565E-01
0.1992125E-01	0.2474590E-01	-0.2865460E-01	-0.2665517E-01	-0.5267347E-16	-0.2644463E-01	-0.2237272E-01
-0.1536028E-01	-0.8853545E-02	-0.5103660E-03	0.8497857E-02	0.1746792E-01	0.2537684E-01	0.3173570E-01
0.5960262E-04	0.5951549E-04	0.5942221E-04	0.5942221E-04	-0.4391757E-04	-0.3111518E-04	0.8669485E-03
0.8657773E-03	-0.7026131E-02	-0.7016391E-02	-0.8465417E-03	-0.8453746E-03	0.6996534E-02	0.6985675E-02
0.2565188E-02	0.4010293E-02	-0.2059216E-02	-0.3159844E-02	-0.2613512E-02	-0.3959885E-02	0.2047363E-02
0.3109806E-02	-0.1143754E-04	-0.5294974E-04	-0.2964716E-04	0.2162539E-06	0.5425128E-03	0.2571150E-01
-0.4571503E-01	-0.2000347E-04	-0.2429021E-04	-0.5813183E-04	-0.6098962E-02	-0.4816312E-01	-0.2520648E-01
-0.2316565E-04	-0.1419072E-04	0.4810600E-04	-0.2883848E-03	-0.2678359E-01	0.4776556E-01	-0.2373861E-04
0.4784095E-04	0.1822009E-04	0.6367963E-02	0.4707541E-01	0.2735339E-01	-0.2112506E-04	0.3888585E-04
-0.8602349E-04	0.2477983E-01	-0.4710137E-01	0.1253503E-02	-0.6728079E-04	-0.1893125E-04	-0.2713593E-04
-0.4666914E-01	-0.2652555E-01	-0.2617132E-02	-0.3173171E-04	0.5864341E-04	-0.1175318E-04	-0.2481970E-01
0.4639901E-01	-0.1402816E-02	0.6507543E-04	0.2040878E-04	0.3376777E-04	0.4672403E-01	0.2590314E-01
0.2548284E-02	0.3118708E-04	-0.6149064E-04	0.1579699E-04	0.2869911E-01	0.2742628E-01	0.2635672E-01
0.2529007E-01	0.2389194E-01	-0.9977422E-01	-0.9616767E-01	-0.9242568E-01	-0.8772288E-01	-0.8156384E-01
0.5971927E-04						

SA-8 RUN #3 MODE 6 XN = 3.372253

0.2296014E-00	0.2122850E-00	0.1976910E-00	0.1824887E-00	0.1695076E-00	0.1644852E-00	0.1557594E-00
0.1481984E-00	0.1412602E-00	0.1377371E-00	0.1323150E-00	0.1273222E-00	0.1214970E-00	0.1114974E-00
0.1029059E-00	0.9344836E-01	0.8689720E-01	0.8111748E-01	0.7787749E-01	0.7499115E-01	0.7238530E-01
0.7001419E-01	0.6765788E-01	0.	0.6894620E-01	0.6549420E-01	0.6340741E-01	0.6139444E-01
0.	0.	-0.7301951E-02	0.5634718E-01	0.	0.	0.
0.	-0.4428782E-01	-0.4689974E-01	-0.3938242E-01	-0.3612068E-01	0.	-0.3310267E-01
-0.2902491E-01	-0.2108163E-01	-0.1242557E-01	-0.1318570E-02	0.1185597E-01	0.2427236E-01	0.3530771E-01
0.4428439E-01	0.5411687E-01	-0.7682675E-01	-0.1300705E-00	0.	-0.1315948E-00	-0.1721809E-00
-0.1980525E-00	-0.2041217E-00	-0.1906283E-00	-0.1591310E-00	-0.1122099E-00	-0.5288254E-01	0.1425019E-01
0.6536734E-02	0.4978419E-02	0.	0.4911010E-02	0.3270941E-02	0.1534438E-02	-0.1938273E-03
-0.1317595E-02	-0.3326647E-02	-0.4675654E-02	-0.5852543E-02	-0.6895506E-02	0.6505432E-01	0.9604501E-01
0.	0.9688158E-01	0.1196542E-00	0.1325981E-00	0.1326192E-00	0.1200955E-00	0.9605930E-01
0.6230322E-01	0.2083253E-01	-0.2542567E-01	[illegible].6930403E-02	-0.[illegible]573350E-02	0.	-0.5514465E-02
-0.4111753E[illegible]	-0.[illegible]5359[illegible]E-02	-0.8[illegible]0035E-03	[illegible]8177599[illegible]-03	0.[illegible]75[illegible]6E[illegible]02	0.4047895E-[illegible]	0.[illegible]0540[illegible]-02
0.[illegible]61[illegible]46E[illegible]2	-0.[illegible]5540[illegible]E-01	-0.2[illegible]3092E-01	[illegible]	-0.[illegible]25[illegible]7E[illegible]01	-0.1748[illegible]1E-[illegible]	-0.[illegible]21207[illegible]E-02
0.1076304E-02	0.9828516E-02	0.1804218E-01	0.2544909E-01	0.[illegible]200144E-01	0.3790856E-01	-0.2366906E-01
-0.1247169E-01	-0.	-0.1205104E-01	0.1791035E-02	0.7930232E-02	0.1624712E-01	0.2264073E-01
0.2714249E-01	0.2971795E-01	0.3059137E-01	0.3033199E-01	0.3492276E-01	0.2550704E-01	-0.
0.2512389E-01	0.1594477E-01	0.6379587E-02	-0.3019189E-02	-0.1171435E-01	-0.1969390E-01	-0.2671639E-01
-0.3276353E-01	-0.3809423E-01	0.2171773E-01	0.7625586E-02	-0.	0.7115273E-02	-0.5503207E-02
-0.1700528E-01	-0.2621298E-01	-0.3254707E-01	-0.3604856E-01	-0.3678035E-01	-0.3511965E-01	-0.3189473E-01
0.5595566E-01	0.5176951E-01	0.4824741E-01	0.4457270E-01	0.4144418E-01	0.4023462E-01	0.3812468E-01
0.3629991E-01	0.3462861E-01	0.3377810E-01	0.3246008E-01	0.3124523E-01	0.2980996E-01	0.2735073E-01
0.2523398E-01	0.2290491E-01	0.2020672E-01	0.1986999E-01	0.1907042E-01	0.1836278E-01	0.1771755E-01
0.1713282E-01	0.1655043E-01	-0.	0.1686881E-01	0.1601448E-01	0.1550047E-01	0.1500197E-01
-0.1420307E-05	-0.	-0.1617115E-02	0.1376324E-01	-0.	-0.	-0.
-0.	-0.1065822E-01	-0.1143137E-01	-0.9388177E-02	-0.8588650E-02	-0.	-0.7848477E-02
-0.6848124E-02	-0.4899457E-02	-0.2777074E-02	-0.5745734E-04	0.3159609E-02	0.6178939E-02	0.8849744E-02
0.1100704E-01	0.1339316E-01	0.6144507E-02	0.3371648E-02	-0.1261953E-14	0.3271975E-02	0.7665683E-03
-0.1520858E-02	-0.3402870E-02	-0.4949738E-02	-0.6364369E-02	-0.7420814E-02	-0.7466433E-02	-0.6558018E-02
0.3832202E-01	0.2060097E-01	-0.1022988E-14	0.1994501E-01	0.3784823E-02	-0.1134743E-01	-0.2419306E-01
-0.3422834E-01	-0.4187340E-01	-0.4693048E-01	-0.4902734E-01	-0.4891434E-01	-0.5853609E-02	-0.3422636E-02
-0.1543062E-15	-0.3328875E-02	-0.1072431E-02	0.1143854E-02	0.3147771E-02	0.4661794E-02	0.5559176E-02
0.6056870E-02	0.6907269E-02	0.8305755E-02	-0.3783593E-01	-0.2024006E-01	0.1686853E-16	-0.1958750E-01
-0.3521419E-02	0.1167254E-01	0.2477314E-01	0.3489882E-01	0.4205484E-01	0.4641534E-01	0.4902418E-01
0.5089794E-01	-0.2752217E-01	-0.2649259E-01	-0.1601772E-15	-0.2634074E-01	-0.2350679E-01	-0.1863241E-01
-0.1191086E-01	-0.4175526E-02	0.3958888E-02	0.1190760E-01	0.1963861E-01	0.2701585E-01	0.3816214E-01
0.3523278E-01	-0.2786805E-16	0.3599593E-01	0.3152876E-01	0.2459150E-01	0.1563356E-01	0.5441892E-02
-0.5694624E-02	-0.1687926E-01	-0.2686909E-01	-0.3501157E-01	0.2839641E-01	0.2712388E-01	-0.2639825E-15
0.2695584E-01	0.2377305E-01	0.1876793E-01	0.1225056E-01	0.4740997E-02	-0.3599716E-02	-0.1206435E-01
-0.1957376E-01	-0.2557560E-01	-0.3817894E-01	-0.3676381E-01	0.7384332E-17	-0.3654582E-01	-0.3250744E-01
-0.2562863E-01	-0.1623978E-01	-0.5469394E-02	0.5851042E-02	0.1683576E-01	0.2721341E-01	0.3675422E-01
-0.1306721E-03	-0.1303563E-03	-0.1300463E-03	-0.1300463E-03	0.8696069E-04	0.3831502E-04	0.8629383E-02
0.8517525E-02	-0.1245638E-02	-0.1244326E-02	-0.8587790E-02	-0.8573441E-02	0.1257193E-02	0.1254812E-02
0.3095286E-02	0.5006130E-02	0.2310815E-02	0.3739383E-02	-0.3179402E-02	-0.5062025E-02	-0.2290494E-02
-0.3649364E-02	0.3214854E-04	0.1818815E-04	-0.7355730E-04	0.2502008E-06	0.7494212E-02	0.5953293E-01
0.1344298E-01	0.2530319E-04	0.7587015E-05	-0.7051897E-04	-0.1750087E-02	0.1469915E-01	-0.5920619E-01
0.2539784E-04	-0.6990044E-04	-0.6647880E-05	-0.7635973E-02	-0.5843665E-01	-0.1556375E-01	0.2242714E-04
-0.3103725E-04	0.1076309E-03	0.1427979E-02	-0.1364550E-01	0.5704256E-01	0.2127511E-04	0.4207335E-04
0.4790350E-04	0.5732931E-01	0.1477252E-01	0.3593188E-02	0.1663574E-04	-0.7611230E-04	0.4024868E-05
0.1277370E-01	-0.5755829E-01	0.7743044E-03	-0.9028497E-04	-0.1169308E-05	-0.4136145E-04	-0.5751841E-01
-0.1416593E-01	-0.3535383E-02	-0.1985864E-04	0.8105767E-04	-0.8386881E-05	-0.1260885E-01	0.5842625E-01
-0.6076196E-03	0.9622300E-04	-0.2051518E-05	0.3595695E-04	0.1277646E-00	0.1210455E-00	0.1154533E-00
0.1097364E-00	0.1025694E-00	0.2313169E-02	0.2209042E-02	0.2120483E-02	0.2002051E-02	0.1841941E-02
-0.1310365E-03						

SA-8 RUN #3 MODE 8 XN = 3 011883

0.1706429E-00	0.1483632E-00	0.1297680E-00	0.1105270E-00	0.9443277E-01	0.8831777E-01	0.7756581E-01
0.6855812E-01	0.6047381E-01	0.5646517E-01	0.5086774E-01	0.4585297E-01	0.4013750E-01	0.3040779E-01
0.2209307E-01	0.1310116E-01	0.6883776E-02	0.1360336E-02	-0.1610976E-02	-0.4218363E-02	-0.6515506E-02
-0.8574059E-02	-0.1048946E-01	-0.	-0.9386941E-02	-0.1236037E-01	-0.1413192E-01	-0.1582941E-01
-0.	-0.	0.9921190E-03	-0.1991043E-01	-0.	-0.	-0.
-0.	-0.1792796E-02	-0.1390696E-02	-0.2130171E-02	-0.2301738E-02	-0.	-0.2426907E-02
-0.2545510E-02	-0.2633645E-02	-0.2568267E-02	-0.2314329E-02	-0.1830755E-02	-0.1238479E-02	-0.6468763E-03
-0.1341001E-03	0.2499416E-03	-0.9576580E-02	-0.3859799E-02	-0.	-0.3725449E-02	0.1070460E-02
0.5043995E-02	0.8029142E-02	0.9400406E-02	0.9672069E-02	0.8613828E-02	0.6590861E-02	0.4179558E-02
-0.1789566E-01	-0.4239996E-02	-0.	-0.3730897E-02	0.7927522E-02	0.1762861E-01	0.2454876E-01
0.2769874E-01	0.2783898E-01	0.2476454E-01	0.1874521E-01	0.1066125E-01	0.8960980E-02	0.1362846E-02
-0.	0.1040987E-02	-0.5396228E-02	-0.1082098E-01	-0.1421702E-01	-0.1610431E-01	-0.1597349E-01
-0.1423238E-01	-0.1097178E-01	-0.6417037E-02	0.1811391E-01	0.3016413E-02	-0.	0.2524542E-02
-0.1336334E-01	-0.2095702E-01	-0.2764035E-01	-0.3082291E-01	-0.3027893E-01	-0.2671228E-01	-0.2069752E-01
-0.1322485E-01	0.4462545E-01	0.1104086E-00	0.	0.11[illegible]778E-00	0.1661093E-00	0.2065756E-00
0.2268922E-00	0.2248358E-00	0.2016254E-00	0.1594270E-00	0.10[illegible]0418E-00	0.3525247E-01	-0.1225903E-01
0.1580631E-01	0.	0.1676849E-01	0.4021031E-01	0.5902868E-01	0.7038805E-01	0.7313975E-01
0.6818442E-01	0.5633663E-01	0.3935814E-01	0.1953047E-01	0.2587589E-01	0.9294220E-01	0.
0.9505807E-01	0.1501194E-00	0.1923984E-00	0.2151653E-00	0.2159500E-00	0.1959474E-00	0.1571723E-00
0.1033094E-00	0.4009283E-01	0.2399043E-01	0.1803115E-01	0.	0.1776547E-01	0.1198577E-01
0.6124779E-02	0.7772543E-03	-0.4237868E-02	-0.7862165E-02	-0.9894619E-02	-0.9910416E-02	-0.8266536E-02
0.1594232E-00	0.1447256E-00	0.1324100E-00	0.1195050E-00	0.1084668E-00	0.1042552E-00	0.9679209E-01
0.9036493E-01	0.8447591E-01	0.8147374E-01	0.7676772E-01	0.7249611E-01	0.6739293E-01	0.5866245E-01
0.5104555E-01	0.4278725E-01	0.3337182E-01	0.3188084E-01	0.2895840E-01	0.2651024E-01	0.2409761E-01
0.2191695E-01	0.1981071E-01	0.	0.2095973E-01	0.1784161E-01	0.1594942E-01	0.1402984E-01
0.6385560E-04	0.	-0.1336194E-02	0.9484960E-02	0.	0.	0.
0.	-0.2916970E-01	-0.2773399E-01	-0.2880610E-01	-0.2792370E-01	0.	-0.2710221E-01
-0.2597018E-01	-0.2361878E-01	-0.2074709E-01	-0.1658211E-01	-0.1101902E-01	-0.5183830E-02	0.5652266E-03
0.6016112E-02	0.1292905E-01	-0.6287479E-02	-0.1834794E-01	-0.1046423E-12	-0.1858567E-01	-0.2590451E-01
-0.2484841E-01	-0.1550144E-01	-0.1233324E-01	-0.2885685E-01	-0.4767106E-01	-0.1404739E-01	0.7667850E-01
0.3672124E-01	0.3275238E-01	-0.8263725E-13	0.3262947E-01	0.2924250E-01	0.3072365E-01	0.3798411E-01
0.3702035E-01	0.1243406E-01	-0.1999697E-01	-0.3532330E-02	0.7258987E-01	0.4551954E-01	0.3323548E-01
-0.1217170E-13	0.3286297E-01	0.2330170E-01	0.1909617E-01	0.2005369E-01	0.1260332E-01	-0.1564519E-01
-0.4593280E-01	-0.2191335E-01	0.6256778E-01	0.7088666E-02	-0.7118623E-02	0.1622436E-14	-0.7447218E-02
-0.1727166E-01	-0.1767770E-01	-0.7007200E-02	-0.2532040E-04	-0.1360161E-01	-0.3380986E-01	-0.6342465E-02
0.7722950E-01	-0.6750920E-02	-0.2678228E-01	-0.1320133E-13	-0.2746864E-01	-0.4546460E-01	-0.4969582E-01
-0.3585531E-01	-0.1735859E-01	-0.1293062E-01	-0.1925031E-01	0.2397691E-02	0.6537270E-01	0.1305089E-01
-0.4329028E-02	-0.2327038E-14	-0.5164406E-02	-0.2312334E-01	-0.2960676E-01	-0.1911150E-01	-0.3651362E-02
-0.2590642E-02	-0.1379433E-01	0.1984261E-02	0.6102779E-01	0.4961314E-01	0.3505460E-01	-0.2244823E-13
0.3440782E-01	0.1991671E-01	0.1591134E-01	0.2512382E-01	0.3430114E-01	0.2516080E-01	0.2798892E-02
0.8083001E-02	0.5686147E-01	0.3078733E-01	0.1398537E-01	0.1170637E-14	0.1322957E-01	-0.2929148E-02
-0.7808357E-02	0.2871511E-02	0.1656298E-01	0.1361721E-01	-0.3349669E-02	0.5725547E-02	0.5815059E-01
0.2532213E-03	0.2425178E-03	0.2332897E-03	0.2332898E-03	-0.1373765E-03	0.1045273E-02	0.1853600E-02
0.1848689E-02	0.5377634E-02	0.5347007E-02	-0.2602805E-02	-0.2579518E-02	-0.5628960E-02	-0.5643278E-02
-0.2910749E-02	-0.3777405E-02	0.2330403E-02	0.5522252E-02	0.1721979E-03	-0.5154849E-03	-0.4713224E-03
-0.2512554E-02	0.2736179E-03	0.5497938E-04	-0.1349719E-05	-0.3962269E-06	-0.7366043E-02	0.4321122E-01
-0.6874645E-01	0.1845527E-02	-0.9332189E-03	0.1611850E-02	-0.8068323E-02	0.5802483E-01	-0.8725754E-01
0.1844250E-02	-0.1062400E-02	0.1554047E-02	-0.1260537E-01	0.4179670E-01	-0.9966364E-01	0.1846615E-02
-0.1026121E-02	0.1595262E-02	-0.1734551E-01	0.2634537E-01	-0.8600890E-01	0.1846000E-02	-0.1049239E-02
0.1692095E-02	-0.5309156E-03	0.4302262E-01	0.3485550E-02	0.6858088E-04	0.3316075E-04	-0.2391197E-03
0.1579679E-01	0.2889156E-01	0.5415714E-02	0.8992539E-04	-0.2426488E-04	-0.2292649E-03	-0.2888088E-02
0.1189333E-01	0.3010064E-02	-0.5061461E-04	0.6191727E-04	-0.2858756E-03	-0.1476301E-01	0.2974460E-01
0.5374466E-03	0.1062946E-03	0.8417410E-04	-0.2126384E-03	0.5706882E-01	0.4942259E-01	0.4315832E-01
0.3578811E-01	0.2916662E-01	0.5853695E-01	0.5527439E-01	0.5199593E-01	0.4800844E-01	0.4285788E-01
0.2626098E-03						

SA-8 RUN #3 MODE 7 XN = 3.202595

0.2224257E-00	0.2055513E-00	0.1913228E-00	0.1764947E-00	0.1638193E-00	0.1589105E-00	0.1503877E-00
0.1429900E-00	0.1361943E-00	0.1327399E-00	0.1273954E-00	0.1224677E-00	0.1167124E-00	0.1068282E-00
0.9533185E-01	0.8897087E-01	0.8248410E-01	0.7674029E-01	0.7352098E-01	0.7064677E-01	0.6804585E-01
0.6567394E-01	0.6332788E-01		0.6461860E-01	0.6115903E-01	0.5906488E-01	0.5704299E-01
-0.	-0.	-0.	0.5202548E-01	-0.	-0.	-0.
-0.	-0.4932858E-01	-0.6276937E-02	-0.4523911E-01	-0.4245783E-01	-0.	-0.3986693E-01
-0.3532977E-01	-0.2930145E-01	-0.5136304E-01	-0.1103570E-01	0.1709438E-02	0.1414290E-01	0.2554338E-01
0.3522147E-01	0.4600912E-01	-0.2143143E-01	0.1674567E-01	-0.	0.1793057E-01	0.4812251E-01
0.7249446E-01	0.8803535E-01	-0.1920154E-01	0.9132703E-01	0.8052051E-01	0.6292484E-01	0.4086773E-01
0.3264908E-01	0.9468494E-02	0.9409570E-01	0.8660690E-02	-0.1158689E-01	-0.2921123E-01	-0.4237386E-01
-0.5040628E-01	-0.5361128E-01	-0.	-0.4683695E-01	-0.3875382E-01	0.2154379E-01	-0.1029805E-01
-0.	-0.1135665E-01	-0.5222472E-01	-0.6025016E-01	-0.7468506E-01	-0.8092808E-01	-0.7954619E-01
-0.7117843E-01	-0.5689035E-01	-0.3826224E-01	-0.3251391E-01	-0.8940748E-02	-0.	-0.8120054E-02
0.1244063E-01	0.3029255E-01	-0.3870607E-01	0.5156578E-01	0.5463184E-01	0.5301288E-01	0.4732149E-01
0.3889246E-01	-0.7068681E-01	0.4355258E-01	0.	-0.9389934E-01	-0.1103748E-00	-0.1194596E-00
-0.1181963E-00	-0.1064247E-00	-0.9328917E-01	-0.5407443E-01	-0.1698187E-01	0.2402957E-01	0.4826875E-02
0.4872803E-02	0.	-0.8453925E-01	0.4739757E-02	0.4379164E-02	0.3705910E-02	0.2777955E-02
0.1595485E-02	0.2206807E-03	0.4868389E-02	-0.2884730E-02	0.7058240E-01	0.9290626E-01	0.
0.9350289E-01	0.1097445E-00	-0.1292192E-02	0.1172478E-00	0.1054448E-00	0.8360934E-01	0.5326938E-01
0.1536397E-01	-0.2441950E-01	0.1186363E-00	0.1119675E-01	0.	0.1153410E-01	0.2020098E-01
0.2706834E-01	0.3105211E-01	0.7759167E-03	0.2959146E-01	0.2452070E-01	0.1718020E-01	0.8426255E-02
-0.1179681E-00	-0.1088711E-00	0.3186802E-01	-0.9321547E-01	-0.8640289E-01	-0.8376247E-01	-0.7918385E-01
-0.7521723E-01	-0.7157751E-01	-0.1011993E-00	-0.6688354E-01	-0.6422795E-01	-0.6111686E-01	-0.5577011E-01
-0.5118501E-01	-0.4612427E-01	-0.6972935E-01	-0.3951795E-01	-0.3778515E-01	-0.3622245E-01	-0.3482595E-01
-0.3354958E-01	-0.3223563E-01	-0.4028648E-01	-0.3298453E-01	-0.3111434E-01	-0.2998102E-01	-0.2889596E-01
-0.5000217E-05	0.	0.	-0.2615339E-01	0.	0.	0.
0.	0.2539967E-01	0.2892464E-02	0.2338149E-01	0.2195191E-01	0.	0.2062075E-01
0.1880411E-01	0.1519505E-01	0.2626721E-01	0.5806464E-02	-0.7569867E-03	-0.7174143E-02	-0.1307714E-01
-0.1811695E-01	-0.2374708E-01	0.1115206E-01	0.2662885E-01	0.1469759E-14	0.2619012E-01	0.1564085E-01
0.4935149E-02	-0.5162269E-02	0.3764204E-01	-0.2091640E-01	-0.2630599E-01	-0.3068697E-01	-0.3438925E-01
0.3163353E-01	0.2163913E-01	-0.1385847E-01	0.2125080E-01	0.1179569E-01	0.2349699E-02	-0.6399988E-02
-0.1374417E-01	-0.1944610E-01	0.1091800E-14	-0.2673382E-01	-0.2953059E-01	-0.3826173E-01	-0.2667408E-01
0.1726597E-15	-0.2622043E-01	-0.2352437E-01	-0.4274333E-02	0.5809373E-02	0.1460748E-01	0.2224858E-01
0.2321992E-01	0.3167834E-01	-0.1521769E-01	-0.3275400E-01	-0.2285920E-01	-0.3264587E-16	-0.2247347E-01
-0.1308978E-01	-0.3800386E-02	0.3281647E-01	0.1202176E-01	0.1841819E-01	0.2346974E-01	0.2638061E-01
0.2728946E-01	0.4599635E-02	0.4678492E-02	0.2060652E-15	0.4984758E-02	0.5029319E-02	0.4540883E-02
0.3471370E-02	0.2095929E-02	0.4989657E-02	-0.4632968E-03	-0.1973356E-02	-0.3875617E-02	0.5575444E-01
0.5452374E-01	0.3093572E-16	0.7573543E-03	0.4994202E-01	0.4194562E-01	0.3047060E-01	0.1677341E-01
0.1097860E-02	-0.1293001E-01	0.5428775E-01	-0.3995016E-01	-0.4623499E-02	-0.4109808E-02	0.3632544E-15
-0.4072977E-02	-0.3359813E-02	-0.2707307E-01	-0.1801570E-02	-0.9334078E-03	0.2332766E-03	0.1554414E-02
0.2399537E-02	0.2497267E-02	-0.2576837E-02	-0.5558108E-01	-0.4623193E-16	-0.5532499E-01	-0.5051407E-01
-0.4234421E-01	-0.3111775E-01	-0.5726415E-01	-0.2738086E-02	0.1264099E-01	0.2665444E-01	0.3822782E-01
0.4446061E-04	0.4442164E-04	-0.1775107E-01	0.4437253E-04	-0.2661140E-04	-0.1903710E-04	0.6403759E-02
0.6394463E-02	-0.7582706E-02	0.4437253E-04	-0.6531097E-02	-0.6519970E-02	0.7693410E-02	0.7680391E-02
0.4546289E-02	0.7562075E-02	-0.7571286E-02	-0.7168505E-03	-0.4439255E-02	-0.7412711E-02	0.3169973E-03
0.5613453E-03	-0.1711519E-04	-0.3968634E-03	-0.8046336E-04	0.3418901E-06	0.5063485E-02	0.5014746E-01
-0.2477072E-01	-0.2245296E-04	-0.4180616E-04	-0.1110258E-03	-0.7308272E-02	-0.2733213E-01	-0.4951088E-01
-0.2373764E-04	-0.6080340E-04	-0.1828204E-04	-0.5001225E-02	-0.5141286E-01	0.2702469E-01	-0.2670657E-04
0.4094970E-04	0.7099358E-04	0.1644695E-04	0.2615277E-01	0.5199248E-01	-0.2602752E-04	0.9195244E-04
-0.6268523E-04	0.4856708E-01	0.7853890E-02	0.3680708E-02	-0.4793582E-04	-0.7315420E-04	-0.1525355E-04
-0.2695785E-01	-0.5069775E-01	-0.2598487E-01	-0.1043193E-03	0.7020848E-04	-0.3065431E-04	-0.4855047E-01
0.2538397E-01	-0.3802124E-02	-0.2289756E-02	0.7159003E-04	0.2268498E-04	0.2694148E-01	0.4982329E-01
0.2222081E-02	0.9602621E-04	0.5327614E-04	0.3577657E-04	0.1025499E-00	0.9703437E-01	0.9243384E-01
0.8773764E-01	0.8184201E-01	-0.6986781E-04	-0.8364245E-01	-0.7988838E-01	-0.7523883E-01	-0.6918389E-01
0.4453545E-04		-0.8729901E-01				

0.8622957E-01	0.7979738E-01	0.7435657E-01	0.6868217E-01	0.6380643E-01	0.6191211E-01	0.5861379E-01
0.5573274E-01	0.5307802E-01	0.5171419E-01	0.4961005E-01	0.4765999E-01	0.4538369E-01	0.4147056E-01
0.3811993E-01	0.3442959E-01	0.3188335E-01	0.2961591E-01	0.2838175E-01	0.2730172E-01	0.2634081E-01
0.2548128E-01	0.2467178E-01	-0.	0.2513236E-01	0.2390578E-01	0.2316995E-01	0.2246618E-01
-0.	-0.	-0.1876400E-02	0.2087562E-01	-0.	-0.	-0.
-0.	-0.3091383E-01	-0.3061736E-01	-0.3088070E-01	-0.3069012E-01	-0.	-0.3047313E-01
-0.3008784E-01	-0.2896827E-01	-0.2715558E-01	-0.2395242E-01	-0.1886059E-01	-0.1263971E-01	-0.5785559E-02
0.1449764E-02	0.1078788E-01	-0.3472835E-01	-0.7437017E-04	-0.	0.1083856E-02	0.3028717E-01
0.5387369E-01	0.6867656E-01	0.7422917E-01	0.7090598E-01	0.5966920E-01	0.4181632E-01	0.1964685E-01
-0.3204385E-01	-0.2951493E-02	-0.	-0.1992434E-02	0.2253081E-01	0.4239297E-01	0.5492447E-01
0.5979201E-01	0.5722051E-01	0.4802267E-01	0.3332079E-01	0.1509360E-01	0.3431210E-01	-0.1190421E-02
-0.	-0.2352759E-02	-0.3220605E-01	-0.5624009E-01	-0.7138255E-01	-0.7694951E-01	-0.7347812E-01
-0.6174762E-01	-0.4304993E-01	-0.1983363E-01	0.3196702E-01	0.2905647E-02	-0.	0.1947099E-02
-0.2252750E-01	-0.4233880E-01	-0.5493001E-01	-0.5976140E-01	-0.5725720E-01	-0.4805183E-01	-0.3316670E-01
-0.1452814E-01	-0.3434258E-02	-0.2225259E-02	0.	-0.2177178E-02	-0.1054247E-02	0.5094340E-04
0.1517965E-02	0.1877471E-02	0.2459768E-02	0.2712776E-02	0.2556679E-02	0.2068134E-02	-0.4311626E-01
0.9764609E-02	0.	0.1153110E-01	0.5635342E-01	0.9306169E-01	0.1162247E-00	0.1244863E-00
0.1178658E-00	0.9779370E-01	0.6665242E-01	0.2853286E-01	0.3240068E-02	0.1415997E-02	0.
0.1358202E-02	-0.2072558E-03	-0.1529727E-02	-0.2505624E-02	-0.2953869E-02	-0.3039571E-02	-0.2825883E-02
-0.2480632E-02	-0.2122152E-02	0.4233320E-01	-0.1198532E-01	0.	-0.1381051E-01	-0.5998315E-01
-0.9796436E-01	-0.1221093E-00	-0.1306390E-00	-0.1236324E-00	-0.1024675E-00	-0.6984980E-01	-0.3023250E-01
0.2272551E-00	0.2071346E-00	0.1901928E-00	0.1725896E-00	0.1576148E-00	0.1518349E-00	0.1417701E-00
0.1331010E-00	0.1251847E-00	0.1211713E-00	0.1151215E-00	0.1094980E-00	0.1029321E-00	0.9166357E-01
0.8202426E-01	0.7142839E-01	0.5883765E-01	0.5756238E-01	0.5400347E-01	0.5084321E-01	0.4804359E-01
0.4551674E-01	0.4313627E-01	0.	0.4450537E-01	0.4084966E-01	0.3864832E-01	0.3654773E-01
0.2916799E-05	0.	-0.2672318E-02	0.3157597E-01	0.	0.	0.
0.	-0.6455620E-01	-0.6337003E-01	-0.6529119E-01	-0.6539859E-01	0.	-0.6536578E-01
-0.6504834E-01	-0.6341162E-01	-0.6009232E-01	-0.5367608E-01	-0.4302885E-01	-0.2982748E-01	-0.1534301E-01
-0.2823830E-03	0.1835797E-01	-0.5620291E-01	-0.6475910E-01	0.2060219E-13	-0.6489193E-01	-0.6966146E-01
-0.7080800E-01	-0.6864913E-01	-0.6146914E-01	-0.4612338E-01	-0.2446894E-01	-0.8854775E-02	-0.8041843E-02
0.5719075E-01	0.7403447E-01	0.1630974E-13	0.7443482E-01	0.8578352E-01	0.8902571E-01	0.8148439E-01
0.6622768E-01	0.5001696E-01	0.3577983E-01	0.1689380E-01	-0.9707439E-02	0.4975023E-01	0.6382707E-01
0.2402025E-14	0.6414905E-01	0.7321952E-01	0.7506674E-01	0.6760237E-01	0.5407408E-01	0.4087841E-01
0.3014424E-01	0.1463285E-01	-0.8878572E-02	-0.6372897E-01	-0.7555289E-01	-0.3458290E-15	-0.7575254E-01
-0.8229674E-01	-0.8357322E-01	-0.8005105E-01	-0.7061652E-01	-0.5245929E-01	-0.2757135E-01	-0.8741685E-02
-0.5729782E-02	-0.7518525E-01	-0.7483883E-01	0.2574207E-14	-0.7479631E-01	-0.7364451E-01	-0.7145237E-01
-0.6782081E-01	-0.6065007E-01	-0.4674469E-01	-0.2685177E-01	-0.1036095E-01	-0.4695171E-02	-0.2846897E-04
0.2428987E-02	0.4674214E-15	0.2535188E-02	0.4972125E-02	0.5731893E-02	0.3665262E-02	0.4238511E-03
-0.6992982E-04	0.3130325E-02	0.2705142E-02	-0.7017772E-02	0.6777294E-01	0.7301171E-01	0.4388168E-14
0.7317080E-01	0.7709591E-01	0.7633353E-01	0.6873087E-01	0.5606989E-01	0.4302707E-01	0.3152606E-01
0.1591085E-01	-0.7287968E-02	-0.8066721E-02	-0.5957968E-02	-0.1948859E-15	-0.5854652E-02	-0.3797197E-02
-0.3002451E-02	-0.4302194E-02	-0.6032611E-02	-0.4384135E-02	0.1292150E-02	0.3325216E-02	-0.4322259E-02
-0.1705131E-04	-0.1790542E-04	-0.1696445E-04	-0.1696445E-04	0.3180349E-03	0.1894122E-03	0.1146650E-01
0.1144925E-01	0.9531303E-02	0.9529124E-02	-0.1163192E-01	-0.1160293E-01	-0.9923135E-02	-0.9878719E-02
0.8710963E-03	0.1066938E-02	0.7821484E-02	0.1363853E-01	-0.1142340E-02	-0.1522043E-02	-0.7686374E-02
-0.1349514E-01	0.1170231E-05	0.1411578E-03	-0.7293558E-04	0.2346548E-07	0.1671253E-01	0.1384295E-01
0.2309132E-01	-0.2139157E-03	-0.6258822E-04	-0.1360212E-03	0.8275084E-02	0.2519568E-01	-0.1814145E-01
-0.2144604E-03	-0.2960765E-03	-0.2190769E-03	-0.1178211E-01	-0.1587821E-01	-0.2838681E-01	-0.2161926E-03
-0.3395341E-03	-0.1249870E-05	-0.3942237E-02	-0.2734382E-01	0.1222916E-01	-0.2181058E-03	-0.1233263E-03
0.8798211E-04	0.1437073E-01	0.2328272E-01	0.2482413E-02	0.1654296E-03	-0.8471214E-04	0.1243979E-03
0.2436755E-01	-0.1568611E-01	0.6096886E-02	-0.8043669E-04	-0.1485386E-03	0.1062261E-03	-0.1432422E-01
-0.2592620E-01	-0.3434176E-02	-0.1780792E-03	0.8964536E-04	0.8276151E-04	-0.2374730E-01	0.1249500E-01
-0.7000503E-02	0.8654976E-04	0.1446988E-03	0.1196759E-03	0.6861299E-01	0.6456590E-01	0.6115702E-01
0.5759144E-01	0.5321917E-01	0.9301605E-01	0.8807377E-01	0.8292950E-01	0.7655771E-01	0.6826795E-01
-0.1576913E-04						

SA-8 RUN #3 MODE 10 XN = 2 391108

0.2227124E-00	0.2026273E-00	0.1857347E-00	0.1681925E-00	0.1532867E-00	0.1475498E-00	0.1375429E-00
0.1289471E-00	0.1211207E-00	0.1171584E-00	0.1112525E-00	0.1058391E-00	0.9957181E-01	0.8882975E-01
0.7964018E-01	0.6956573E-01	0.6260939E-01	0.5639036E-01	0.5302352E-01	0.5007208E-01	0.4744475E-01
0.4508982E-01	0.4289379E-01	0.	0.4415971E-01	0.4078032E-01	0.3875013E-01	0.3680540E-01
0.	0.	-0.2834849E-02	0.3229503E-01	0.	0.	0.
0.	-0.6693706E-01	-0.6520271E-01	-0.6836687E-01	-0.6883417E-01	0.	-0.6913694E-01
-0.6926789E-01	-0.6844548E-01	-0.6586261E-01	-0.6010443E-01	-0.4975359E-01	-0.3624991E-01	-0.2092806E-01
-0.4457556E-02	0.1631395E-01	-0.3604128E-01	0.2932755E-02	0.	0.4219200E-02	0.3688950E-01
0.6300572E-01	0.7904919E-01	0.8446318E-01	0.7973017E-01	0.6588166E-01	0.4440468E-01	0.1797425E-01
0.2374629E-01	0.1841906E-02	0.	0.1112858E-02	-0.1732957E-01	-0.3219546E-01	-0.4149518E-01
-0.4488049E-01	-0.4259934E-01	-0.3520707E-01	-0.2352892E-01	-0.9067400E-02	0.3657149E-01	-0.1287272E-02
0.	-0.2530601E-02	-0.3430653E-01	-0.5976570E-01	-0.7550289E-01	-0.8095093E-01	-0.7658503E-01
-0.6338634E-01	-0.4279798E-01	-0.1742034E-01	-0.2368998E-01	-0.1797689E-02	0.	-0.1073888E-02
0.1736219E-01	0.3222164E-01	0.4149635E-01	0.4487669E-01	0.4258875E-01	0.3520299E-01	0.2354766E-01
0.9126382E-02	-0.3317237E-01	0.2701180E-01	-0.	0.2900789E-01	0.7964472E-01	0.1204918E-00
0.1452383E-00	0.1522544E-00	0.1416553E-00	0.1151812E-00	0.7582341E-01	0.2850730E-01	-0.8573173E-02
0.3721930E-02	-0.	0.4133319E-02	0.1454131E-01	0.2304508E-01	0.2835158E-01	0.3011486E-01
0.2333583E-01	0.2334305E-01	0.1572273E-01	0.6466177E-02	0.3318493E-01	-0.2708792E-01	-0.
-0.2708792E-01	-0.7980322E-01	-0.1207199E-00	-0.1455254E-00	-0.1525590E-00	-0.1419556E-00	-0.1154503E-00
-0.7603967E-01	-0.2865381E-01	0.8328928E-02	-0.4539789E-02	-0.	-0.4969799E-02	-0.1584527E-01
-0.2468759E-01	-0.3016432E-01	-0.3189263E-01	-0.2991037E-01	-0.2457410E-01	-0.1651659E-01	-0.6781013E-02
-0.4861655E-01	-0.4387137E-01	-0.3987927E-01	-0.3573022E-01	-0.3220462E-01	-0.3084418E-01	-0.2847959E-01
-0.2544343E-01	-0.2458687E-01	-0.2364815E-01	-0.2221578E-01	-0.2088715E-01	-0.1933018E-01	-0.1665842E-01
-0.1436509E-01	-0.1183584E-01	-0.8985843E-02	-0.8498176E-02	-0.7621402E-02	-0.6829473E-02	-0.6110667E-02
-0.5449620E-02	-0.4817032E-02	-0.	-0.5180919E-02	-0.4204253E-02	-0.3610233E-02	-0.3035432E-02
-0.4692222E-05	-0.	0.1869631E-03	-0.1681936E-02	-0.	-0.	-0.
-0.	0.1098260E-01	0.1072744E-01	0.1124655E-01	0.1140195E-01	-0.	0.1151305E-01
0.1160081E-01	0.1154990E-01	0.1117157E-01	0.1024842E-01	0.8561176E-02	0.6383049E-02	0.3971057E-02
0.1467237E-02	-0.1458902E-02	0.3968783E-01	0.4932477E-01	0.1958335E-14	0.4952719E-01	0.5562201E-01
0.5731180E-01	0.5389464E-01	0.4621236E-01	0.3580807E-01	0.2391961E-01	0.1150640E-01	0.6480865E-03
0.6626878E-01	0.8583474E-01	0.1524279E-14	0.8627553E-01	0.9913684E-01	0.1037691E-00	0.9865500E-01
0.8514459E-01	0.6589987E-01	0.4357288E-01	0.2083903E-01	0.1599613E-02	-0.4062084E-01	-0.4987978E-01
0.2299912E-15	-0.5007965E-01	-0.5588054E-01	-0.5748748E-01	-0.5421840E-01	-0.4641732E-01	-0.3512088E-01
-0.2225410E-01	-0.1086327E-01	-0.3238773E-02	-0.6727333E-01	-0.8661585E-01	-0.3442675E-16	-0.8705059E-01
-0.9973482E-01	-0.1043824E-00	-0.9956797E-01	-0.8609970E-01	-0.6606172E-01	-0.4264520E-01	-0.2063342E-01
-0.4319750E-02	-0.1562463E-01	-0.1540865E-01	0.2575936E-15	-0.1538548E-01	-0.1505831E-01	-0.1446833E-01
-0.1341915E-01	-0.1165413E-01	-0.8938620E-02	-0.5600188E-02	-0.2708375E-02	-0.9090262E-03	0.6569300E-01
0.6729825E-01	0.4520184E-16	0.6943726E-01	0.7244393E-01	0.7263632E-01	0.6839925E-01	0.5963064E-01
0.4740022E-01	0.3296599E-01	0.1745568E-01	0.2563514E-02	0.1444542E-01	0.1489552E-01	0.4430615E-15
0.1491311E-01	0.1523575E-01	0.1481039E-01	0.1334000E-01	0.1105317E-01	0.8442350E-02	0.5691006E-02
0.2396112E-02	-0.1384739E-02	-0.6631644E-01	-0.6904671E-01	-0.3740185E-16	-0.6915296E-01	-0.7131988E-01
-0.7116499E-01	-0.6729730E-01	-0.5915556E-01	-0.4703774E-01	-0.3223984E-01	-0.1734408E-01	-0.4661704E-02
0.1727132E-04	0.1734508E-04	0.1739799E-04	0.1739800E-04	-0.1032368E-04	-0.2314556E-04	0.1293431E-01
0.1290918E-01	-0.7637841E-02	-0.7622424E-02	-0.1287631E-01	-0.1284667E-01	0.7584157E-02	0.7566983E-02
0.7470765E-02	0.1320409E-01	0.2400081E-02	0.3725771E-02	-0.7429458E-02	-0.1313717E-01	-0.2417775E-02
-0.3777629E-02	-0.9585681E-05	-0.2097220E-04	-0.1581831E-03	0.1898144E-06	0.1090111E-01	0.2414723E-01
-0.1556967E-02	-0.3177177E-04	-0.1142414E-04	-0.1988024E-03	-0.1167095E-01	-0.3593298E-02	-0.2317936E-01
-0.3456739E-04	-0.1438386E-03	-0.1472978E-04	-0.1047887E-01	-0.2579090E-01	0.4786532E-02	-0.3681928E-04
0.4864073E-04	0.1392012E-03	0.1208102E-01	0.1934061E-02	0.2647071E-01	-0.3356765E-04	0.1829598E-03
-0.4371760E-04	0.2271884E-01	-0.2947816E-02	0.7045119E-02	-0.2944322E-04	-0.1659912E-03	0.5295269E-05
-0.2649302E-02	-0.2428317E-01	-0.7206207E-03	-0.1889184E-03	0.2912233E-04	-0.1509195E-04	-0.2262342E-01
0.1726383E-02	-0.7163180E-02	0.2784710E-04	0.1643418E-03	0.3258545E-05	0.2574889E-02	0.2323224E-01
0.5965434E-03	0.1865069E-03	-0.2971621E-04	0.2247199E-04	0.9542495E-01	0.8902137E-01	0.8365396E-01
0.7805992E-01	0.7128849E-01	-0.4212431E-01	-0.3960111E-01	-0.3704838E-01	-0.3394896E-01	-0.2994721E-01
0.1727991E-04						

SA-8 RUN #3 MODE 11 XN = 1.926711

0.3301103E-00	0.2887758E-00	0.2541165E-00	0.2181878E-00	0.1878174E-00	0.1761743E-00	0.1559373E-00
0.1386765E-00	0.1230678E-00	0.1152633E-00	0.1035461E-00	0.9284372E-01	0.8044833E-01	0.5920041E-01
0.4091732E-01	0.2077764E-01	0.6767679E-02	-0.5991463E-02	-0.1317068E-01	-0.1974477E-01	-0.2583701E-01
-0.3154117E-01	-0.3708597E-01	0.	-0.3392104E-01	-0.4246507E-01	-0.4771753E-01	-0.5285876E-01
0.	0.	0.4219483E-02	-0.6554159E-01	0.	0.	0.
0.	-0.8049757E-02	-0.4683091E-02	-0.1066378E-01	-0.1205718E-01	0.	-0.1314273E-01
-0.1428810E-01	-0.1557725E-01	-0.1589153E-01	-0.1518642E-01	-0.1337328E-01	-0.1139162E-01	-0.1029793E-01
-0.1095566E-01	-0.1675748E-01	-0.4429128E-02	0.5986183E-02	0.	0.6276302E-02	0.1450053E-01
0.2028892E-01	0.2278168E-01	0.2183849E-01	0.1773228E-01	0.1068320E-01	0.1216111E-02	-0.9727918E-02
-0.3926777E-02	0.1288392E-02	0.	0.1480992E-02	0.5814251E-02	0.9092910E-02	0.1089542E-01
0.1083465E-01	0.9236366E-02	0.6052925E-02	0.1411448E-02	-0.4304696E-02	0.5031532E-02	-0.4266552E-02
0.	-0.4582308E-02	-0.1198752E-01	-0.1724209E-01	-0.1914094E-01	-0.1809030E-01	-0.1398080E-01
-0.7565834E-02	0.5680196E-03	0.9782826E-02	0.4204924E-02	-0.1076366E-02	0.	-0.1243389E-02
-0.5578580E-02	-0.9102592E-02	-0.1074221E-01	-0.1079661E-01	-0.9061626E-02	-0.5956223E-02	-0.1868374E-02
0.2563238E-02	0.1041644E-02	0.6290310E-02	-0.	0.6446097E-02	0.1063680E-01	0.1355618E-01
0.1462186E-01	0.1356204E-01	0.1080291E-01	0.6746563E-02	0.2031315E-02	-0.2867924E-02	-0.2934202E-02
0.1323493E-01	-0.	0.1378633E-01	0.2731784E-01	0.3798844E-01	0.4380924E-01	0.4397687E-01
0.3850559E-01	0.2792451E-01	0.1353180E-01	-0.2864845E-02	-0.3427546E-03	-0.4571525E-02	-0.
-0.4724083E-02	-0.8262282E-02	-0.1105155E-01	-0.1239477E-01	-0.1256900E-01	-0.1108379E-01	-0.8038724E-02
-0.3427218E-02	0.2332869E-02	0.3702050E-02	-0.1141620E-01	-0.	-0.1189808E-01	-0.2408176E-01
-0.3302856E-01	-0.3703781E-01	-0.3638527E-01	-0.3096217E-01	-0.2155003E-01	-0.8734567E-02	0.6407867E-02
0.2476122E-00	0.2176180E-00	0.1924678E-00	0.1663597E-00	0.1442292E-00	0.1357527E-00	0.1210010E-00
0.1083846E-00	0.9696349E-01	0.9123639E-01	0.8241871E-01	0.7428562E-01	0.6472433E-01	0.4831443E-01
0.3412291E-01	0.1847107E-01	0.2329882E-02	-0.2436738E-02	-0.8149812E-02	-0.1336330E-01	-0.1832538E-01
-0.2300024E-01	-0.2759213E-01	-0.	-0.2499745E-01	-0.3201830E-01	-0.3635941E-01	-0.4066005E-01
-0.9364027E-06	-0.	0.3085428E-02	-0.5120890E-01	-0.	-0.	-0.
-0.	-0.1146571E-01	-0.8365099E-02	-0.1339956E-01	-0.1426302E-01	-0.	-0.1492413E-01
-0.1560546E-01	-0.1630192E-01	-0.1629682E-01	-0.1547273E-01	-0.1374649E-01	-0.1189246E-01	-0.1076463E-01
-0.1104773E-01	-0.1564044E-01	0.1117025E-01	0.2055391E-01	-0.5571023E-13	0.2080914E-01	0.2801912E-01
-0.3575824E-01	0.4577814E-01	0.5153318E-01	0.4105183E-01	0.1540421E-01	0.3022600E-02	0.2250159E-01
-0.2785012E-02	-0.5026033E-01	-0.4396085E-13	-0.5171333E-01	-0.8941680E-01	-0.1123361E-00	-0.1126059E-00
-0.9576670E-01	-0.8020067E-01	-0.6773292E-01	-0.3764968E-01	0.2183811E-01	0.9082999E-02	-0.1152394E-01
-0.6496249E-14	-0.1215374E-01	-0.2820485E-01	-0.3604659E-01	-0.3124719E-01	-0.2071966E-01	-0.1800645E-01
-0.2454266E-01	-0.1522572E-01	0.2442986E-01	0.2004594E-01	0.5013926E-01	0.9785298E-15	0.5093452E-01
0.7274324E-01	0.8838737E-01	0.9892488E-01	0.9946927E-01	0.7916045E-01	0.4001235E-01	0.1246799E-01
0.1888960E-01	-0.6374808E-02	-0.2515196E-01	-0.7023269E-14	-0.2578584E-01	-0.4223905E-01	-0.5126424E-01
-0.4898626E-01	-0.4038764E-01	-0.3676017E-01	-0.4075598E-01	-0.3349540E-01	-0.1980849E-02	0.1551789E-01
0.1309962E-01	-0.1200764E-14	0.1293561E-01	0.9581252E-02	0.9332734E-02	0.1469255E-01	0.2113096E-01
0.1940548E-01	0.4588969E-02	0.3920032E-03	0.2213038E-01	0.2773411E-01	0.3148784E-01	-0.1198184E-13
0.3159770E-01	0.3437433E-01	0.3961420E-01	0.4813335E-01	0.5431107E-01	0.4813912E-01	0.2908865E-01
0.1708152E-01	0.3466060E-01	0.6715266E-02	-0.4579849E-02	0.6664144E-15	-0.4989940E-02	-0.1480274E-01
-0.1744523E-01	-0.1596740E-01	-0.8811403E-02	-0.8831146E-02	-0.1846282E-01	-0.1789684E-01	0.8099604E-02
0.1757584E-03	0.1718871E-03	0.1686141E-03	0.1686141E-03	-0.9504346E-03	-0.5479272E-03	-0.6343688E-02
-0.6340620E-02	-0.7952020E-03	-0.8364599E-03	0.6501075E-02	0.6475467E-02	0.2086549E-02	0.2021490E-02
-0.5633965E-02	-0.4878947E-02	-0.1251146E-01	-0.1180252E-01	0.6741970E-02	0.6735485E-02	0.1183004E-01
0.1075918E-01	-0.2177421E-04	-0.5888060E-04	0.7256647E-04	-0.3144594E-06	-0.1580203E-01	-0.1526127E-01
-0.1153284E-01	0.5705784E-03	0.4332566E-03	0.2585710E-03	0.9504428E-03	-0.1583612E-01	0.3048385E-01
0.5853007E-03	0.7302592E-03	0.1945779E-03	0.1575604E-02	0.2064311E-01	0.2542786E-01	0.5943798E-03
0.6463729E-03	0.1193858E-03	-0.1200190E-01	0.2183759E-01	-0.1387108E-01	0.5878354E-03	0.4205230E-03
0.1547735E-03	-0.1765484E-01	-0.1288475E-01	0.1505015E-03	-0.8589616E-05	0.3449148E-04	-0.3174920E-03
-0.2282306E-01	0.2327865E-01	-0.1288035E-02	-0.1132406E-04	0.1167917E-03	-0.3345461E-03	0.1798418E-01
0.2276082E-01	0.2430568E-02	0.5336942E-04	-0.5511747E-04	-0.2395880E-03	0.2074907E-01	-0.1472942E-01
0.3654754E-02	-0.1626800E-04	-0.1009254E-03	-0.2888896E-03	0.9909094E-01	0.8264216E-01	0.6921977E-01
0.5557558E-01	0.3931611E-01	0.4829773E-01	0.4140751E-01	0.3528917E-01	0.2863549E-01	0.2044279E-01
0.1706276E-03						

SA-8 RUN #3 MODE 12 XN = 1 885512

0.2524946E-01	0.2235507E-01	0.1991428E-01	0.1736986E-01	0.1519140E-01	0.1434610E-01	0.1289072E-01
0.1162280E-01	0.1045900E-01	0.9870373E-02	0.8925884E-02	0.8050225E-02	0.7021687E-02	0.5249168E-02
0.3713940E-02	0.2004668E-02	0.8096983E-03	-0.2936159E-03	-0.9309827E-03	-0.1528591E-02	-0.2095321E-02
-0.2636623E-02	-0.3172628E-02	0.	-0.2867978E-02	-0.3691930E-02	-0.4203845E-02	-0.4708818E-02
0.	0.	0.3886113E-03	-0.5856050E-02	0.	0.	0.
0.	-0.1350857E-02	-0.9988474E-03	-0.1592912E-02	-0.1718078E-02	0.	-0.1811389E-02
-0.1902452E-02	-0.1979183E-02	-0.1949798E-02	-0.1803320E-02	-0.1544220E-02	-0.1294900E-02	-0.1167872E-02
-0.1257132E-02	-0.1918918E-02	-0.4760841E-03	0.9025402E-03	0.	0.9457211E-03	0.2054368E-02
0.2859746E-02	0.3226023E-02	0.3155689E-02	0.2670667E-02	0.1831727E-02	0.7070101E-03	-0.5984469E-03
0.1462280E-03	-0.7482765E-04	0.	-0.8183629E-04	-0.2565647E-03	-0.3771179E-03	-0.4248545E-03
-0.3938953E-03	-0.2953174E-03	-0.1359086E-03	0.7268894E-04	0.3120010E-03	0.6231595E-03	-0.4422630E-03
0.	-0.4747004E-03	-0.1330090E-02	-0.1947403E-02	-0.2223177E-02	-0.2159021E-02	-0.1772191E-02
-0.1109867E-02	-0.2296565E-03	0.7818957E-03	-0.1521623E-03	0.1049364E-03	0.	0.1128385E-03
0.3167226E-03	0.4576582E-03	0.5042730E-03	0.4734443E-03	0.3578871E-03	0.1780048E-03	-0.5009108E-04
-0.3053752E-03	-0.1819060E-02	-0.5177436E-02	-0.	-0.5275587E-02	-0.7864926E-02	-0.9555503E-02
-0.9950770E-02	-0.8969021E-02	-0.6716047E-02	-0.3384129E-02	0.7587315E-03	0.5364880E-02	0.7572225E-03
0.5411306E-02	-0.	0.5551255E-02	0.9209524E-02	0.1171971E-01	0.1253309E-01	0.1156118E-01
0.8891436E-02	0.4777605E-02	-0.4361556E-03	-0.6285642E-02	-0.7427688E-03	-0.5797090E-02	-0.
-0.5949600E-02	-0.9932090E-02	-0.1268433E-01	-0.1361239E-01	-0.1261443E-01	-0.9784450E-02	-0.5391394E-02
0.1922612E-03	0.6464698E-02	0.1342540E-02	0.4241292E-02	-0.	0.4325082E-02	0.6534061E-02
0.7926019E-02	0.8147302E-02	0.7150750E-02	0.5016168E-02	0.1930267E-02	-0.1865641E-02	-0.6061882E-02
-0.6242066E-02	-0.5468913E-02	-0.4820499E-02	-0.4147552E-02	-0.3576633E-02	-0.3358243E-02	-0.2976804E-02
-0.2650931E-02	-0.2355778E-02	-0.2207435E-02	-0.1982106E-02	-0.1774281E-02	-0.1530694E-02	-0.1112678E-02
-0.7518581E-03	-0.3556108E-03	0.6908313E-04	0.1706188E-03	0.3124605E-03	0.4398735E-03	0.5603628E-03
0.6726652E-03	0.7824351E-03	-0.	0.7208004E-03	0.8873351E-03	0.9900217E-03	0.1091544E-02
-0.1437646E-03	-0.	-0.6300350E-04	0.1302643E-02	-0.	-0.	-0.
-0.	-0.3373792E-03	-0.2818938E-03	-0.3780782E-03	-0.3754249E-03	-0.	-0.3768183E-03
-0.3834078E-03	-0.4055942E-03	-0.4334412E-03	-0.4612202E-03	-0.4665712E-03	-0.4259268E-03	-0.3345005E-03
-0.1826754E-03	0.1028732E-03	-0.4838989E-01	-0.1165348E-00	0.1096765E-14	-0.1184478E-00	-0.1698112E-00
-0.2018306E-00	-0.2089587E-00	-0.1927349E-00	-0.1579664E-00	-0.1115048E-00	-0.6266778E-01	-0.2183628E-01
0.3809020E-01	0.1146179E-00	0.8674463E-15	0.1169549E-00	0.1792330E-00	0.2193892E-00	0.2307157E-00
0.2150621E-00	0.1781507E-00	0.1274084E-00	0.7228921E-01	0.2463048E-01	-0.4609876E-01	-0.1095794E-00
0.1241344E-15	-0.1113588E-00	-0.1591603E-00	-0.1888853E-00	-0.1953804E-00	-0.1800898E-00	-0.1475402E-00
-0.1041769E-00	-0.5878989E-01	-0.2112062E-01	0.3460108E-01	0.1236858E-00	-0.1718142E-16	0.1262411E-00
0.1943184E-00	0.2382552E-00	0.2506952E-00	0.2336431E-00	0.1932708E-00	0.1376655E-00	0.7713575E-01
0.2454235E-01	-0.1281668E-01	-0.1392412E-01	0.1428068E-15	-0.1399344E-01	-0.1535187E-01	-0.1643283E-01
-0.1668233E-01	-0.1571779E-01	-0.1337873E-01	-0.9941551E-02	-0.6237506E-02	-0.2963552E-02	-0.1039186E-01
-0.9915220E-02	0.3790714E-17	-0.9916683E-02	-0.9732726E-02	-0.9507801E-02	-0.9004826E-02	-0.7991524E-02
-0.6278802E-02	-0.4031583E-02	-0.1888568E-02	-0.2983937E-03	-0.1101661E-01	-0.1131776E-01	0.2642939E-15
-0.1135364E-01	-0.1196376E-01	-0.1245232E-01	-0.1240743E-01	-0.1150159E-01	-0.9545691E-02	-0.6754711E-02
-0.3845777E-02	-0.1371586E-02	-0.1340862E-01	-0.1515664E-01	-0.8258942E-17	-0.1524411E-01	-0.1710072E-01
-0.1849338E-01	-0.1880473E-01	-0.1766316E-01	-0.1496770E-01	-0.1108116E-01	-0.6981749E-02	-0.3537249E-02
-0.1021964E-05	-0.9329852E-06	-0.8580824E-06	-0.8580722E-06	0.3431998E-04	0.3254794E-04	-0.2563437E-03
-0.2557274E-03	0.2822253E-03	0.2818589E-03	0.4862020E-03	0.4846142E-03	-0.5229820E-03	-0.5211910E-03
-0.9528479E-02	-0.1477073E-01	0.8136620E-02	0.1343906E-01	-0.7125853E-02	-0.1242869E-01	0.8526025E-02
0.1375573E-01	0.1269873E-04	0.2697102E-05	0.8057457E-05	0.3945685E-05	0.1066109E-01	-0.7850907E-03
0.1059696E-01	0.9421429E-05	0.2469247E-03	-0.4268049E-04	-0.1160745E-01	-0.2107429E-02	-0.6224351E-02
-0.3831810E-04	-0.2235577E-03	0.3201073E-04	0.1039872E-01	0.3687968E-02	0.9772541E-02	0.1117393E-04
0.2341322E-03	-0.5076490E-04	-0.1377608E-01	-0.2222089E-02	-0.1115239E-01	-0.4026176E-04	-0.2575610E-03
0.4176539E-04	-0.1274067E-01	-0.8350768E-03	-0.7742912E-03	-0.1721788E-03	0.1007959E-03	-0.1107790E-03
0.1154292E-01	0.2671961E-02	0.1057328E-02	0.1614355E-03	-0.1116301E-03	0.1223663E-03	-0.7887328E-02
-0.1203454E-02	-0.2736388E-03	-0.1714020E-03	0.7963334E-04	-0.1016586E-03	0.1190967E-01	-0.1769812E-02
0.1117223E-02	0.1552686E-03	-0.1162325E-03	0.1174425E-03	0.6932841E-02	0.5824587E-02	0.4920218E-02
0.3997528E-02	0.2898064E-02	-0.3247048E-02	-0.2768568E-02	-0.2340018E-02	-0.1867677E-02	-0.1281734E-02
-0.1091163E-05						

SA-8 RUN #3 MODE 13 XN = 1 642535

0.2023595E-02	0.1712661E-02	0.1456561E-02	0.1190905E-02	0.9741911E-03	0.8931327E-03	0.7488183E-03
0.6324416E-03	0.5280951E-03	0.4780395E-03	0.4150098E-03	0.3618772E-03	0.3029875E-03	0.2046986E-03
0.1203737E-03	0.3477754E-04	-0.2465186E-04	-0.7454054E-04	-0.9853013E-04	-0.1177480E-03	-0.1314870E-03
-0.1418282E-03	-0.1484523E-03	-0.	-0.1439499E-03	-0.1569528E-03	-0.1626441E-03	-0.1669962E-03
-0.	-0.	0.3529538E-05	-0.1821455E-03	-0.	-0.	-0.
-0.	0.1068736E-03	0.9943579E-04	0.1227020E-03	0.1319569E-03	-0.	0.1405338E-03
0.1517642E-03	0.1712517E-03	0.1874989E-03	0.1997376E-03	0.2005167E-03	0.1858352E-03	0.1592346E-03
0.1213763E-03	0.7454394E-04	-0.7344949E-05	-0.4522876E-03	-0.	-0.4689709E-03	-0.8194891E-03
-0.1062249E-02	-0.1157394E-02	-0.1107739E-02	-0.9226466E-03	-0.6267925E-03	-0.2394528E-03	0.2069446E-03
0.3299752E-03	0.1948401E-03	-0.	0.1922723E-03	0.5973540E-04	-0.7000795E-04	-0.1765859E-03
-0.2733450E-03	-0.3373766E-03	-0.3713557E-03	-0.3779488E-03	-0.3638330E-03	-0.1557310E-03	0.3411072E-04
-0.	0.3661422E-04	0.2055664E-03	0.3480963E-03	0.4514177E-03	0.5027399E-03	0.5031465E-03
0.4546895E-03	0.3637521E-03	0.2486559E-03	-0.2802950E-03	0.5848238E-04	-0.	0.7047597E-04
0.3421313E-03	0.5403861E-03	0.6374757E-03	0.6266924E-03	0.5148535E-03	0.3149575E-03	0.4723907E-04
-0.2551644E-03	0.3617681E-04	0.4554891E-03	0.	0.4664935E-03	0.7865499E-03	0.9916431E-03
-0.1030365E-02	0.8977714E-03	0.6137750E-03	0.2028943E-03	-0.2999902E-03	-0.8560210E-03	0.2635888E-03
-0.4601775E-03	0.	-0.4800052E-03	-0.1064445E-02	-0.1479401E-02	-0.1651203E-02	-0.1561891E-02
-0.1209659E-02	-0.6333450E-03	0.1157299E-03	0.9632531E-03	0.3648847E-04	0.5104003E-03	0.
0.5219716E-03	0.3830397E-03	0.1107319E-02	0.1151248E-02	0.9992859E-03	0.6792308E-03	0.2201740E-03
-0.3397291E-03	-0.9558677E-03	-0.4652585E-03	-0.6997586E-03	0.	-0.7073254E-03	-0.8689772E-03
-0.9296316E-03	-0.8647843E-03	-0.6732069E-03	-0.3672321E-03	0.2628897E-04	0.4830668E-03	0.9699804E-03
-0.3398275E-02	-0.3002959E-02	-0.2665470E-02	-0.2320005E-02	-0.2026101E-02	-0.1909504E-02	-0.1715345E-02
-0.1546031E-02	-0.1390458E-02	-0.1312464E-02	-0.1200345E-02	-0.1088651E-02	-0.9644489E-03	-0.7482484E-03
-0.5597062E-03	-0.3654015E-03	-0.1380464E-03	-0.9606012E-04	-0.2904811E-04	0.4226307E-04	0.9545866E-04
0.1469223E-03	0.1951180E-03	0.	0.1643872E-03	0.2447137E-03	0.2946098E-03	0.3375021E-03
-0.1337678E-02	0.	-0.3220704E-04	0.4691415E-03	0.	0.	0.
0.	-0.3090380E-03	0.4401394E-03	-0.6098820E-03	-0.5333994E-03	0.	-0.4705820E-03
-0.3971728E-03	-0.2842533E-03	-0.1914203E-03	-0.9967889E-04	-0.1789526E-04	0.3650487E-04	0.6682286E-04
0.7099126E-04	0.5813325E-04	-0.5382874E-01	0.4039483E-01	-0.3010537E-15	0.4335178E-01	0.1197256E-00
0.1763778E-00	0.2049398E-00	0.2054872E-00	0.1821715E-00	0.1417616E-00	0.9391078E-01	0.5023412E-01
-0.6503524E-01	0.6863397E-02	-0.9848849E-15	0.9218376E-02	0.6944948E-01	0.1159209E-00	0.1419830E-00
0.1472122E-00	0.1342101E-00	0.1076931E-00	0.7465107E-01	0.4356869E-01	-0.5418380E-01	0.4032458E-01
-0.3360802E-16	0.4329017E-01	0.1199153E-00	0.1767809E-00	0.2054787E-00	0.2060868E-00	0.1827445E-00
0.1422277E-00	0.9420022E-01	0.5030295E-01	-0.6534159E-01	0.7151577E-02	-0.1351714E-15	0.9493654E-02
0.6939035E-01	0.1158047E-00	0.1415277E-00	0.1467300E-00	0.1338075E-00	0.1074504E-00	0.7460616E-01
0.4371431E-01	-0.1036213E-00	-0.1094263E-00	0.1103206E-16	-0.1097386E-00	-0.1159165E-00	-0.1176691E-00
-0.1113882E-00	-0.9623048E-01	-0.7325555E-01	-0.4476226E-01	-0.1401115E-01	0.1491437E-01	-0.1047454E-00
-0.1122304E-00	0.1135991E-16	-0.1126669E-00	-0.1212119E-00	-0.1253061E-00	-0.1206021E-00	-0.1058707E-00
-0.8211651E-01	-0.5181687E-01	-0.1860346E-01	0.1294245E-01	-0.1046847E-00	-0.1107594E-00	-0.5729325E-16
-0.1110893E-00	-0.1175672E-00	-0.1195583E-00	-0.1133762E-00	-0.9812069E-01	-0.7488754E-01	-0.4601012E-01
-0.1482744E-01	0.1449323E-01	-0.1048139E-00	-0.1123969E-00	-0.2057793E-16	-0.1128363E-00	-0.1214329E-00
-0.1255353E-00	-0.1207951E-00	-0.1059889E-00	-0.8214752E-01	-0.5176709E-01	-0.1849990E-01	0.1306235E-01
0.2331236E-04	0.2264386E-04	0.2201994E-04	0.2201993E-04	0.3060130E-03	0.3942104E-03	-0.6882976E-03
-0.6861241E-03	0.5379196E-03	0.5373449E-03	-0.6009183E-03	-0.5987678E-03	0.5540708E-03	0.5531225E-03
0.1154269E-02	0.1885411E-02	-0.1155290E-02	-0.1968945E-02	0.1232019E-02	0.1949855E-02	-0.1255838E-02
-0.2731858E-02	0.1452278E-03	-0.1333929E-06	0.3189282E-06	0.3061670E-03	-0.1311370E-01	-0.1725809E-01
0.1716544E-01	0.3367094E-03	-0.1222223E-03	0.1594767E-03	-0.8770335E-02	-0.1639911E-01	0.2004215E-01
0.3418390E-03	-0.4967022E-04	0.1291222E-03	-0.1310927E-01	-0.1737161E-01	0.1702768E-01	0.3365269E-03
-0.1227169E-03	0.1590930E-03	-0.8671588E-02	-0.1653477E-01	0.2019534E-01	0.3417209E-03	-0.4952208E-04
0.1272973E-03	0.8132919E-02	0.1234892E-01	0.2840213E-02	-0.2481195E-04	-0.1143834E-03	0.3497161E-03
0.5457953E-02	0.1188709E-01	0.2625180E-02	-0.8739640E-04	-0.7874442E-04	0.3084096E-03	0.8078486E-02
0.1222800E-01	0.2891934E-02	-0.2553840E-04	-0.1156631E-03	0.3498584E-03	0.5321871E-02	0.1201357E-01
0.2518041E-02	-0.8840249E-04	-0.7835585E-04	0.3077780E-03	0.9710560E-04	0.6437613E-04	0.3840008E-04
0.1185342E-04	-0.1986106E-04	-0.1075940E-02	-0.9537092E-03	-0.8326589E-03	-0.6907916E-03	-0.5103603E-03
0.2421354E-04						

SA-8 RUN #3 MODE 14 XN = 1 328688

0.4591461E-00	0.3985017E-00	0.3478169E-00	0.2955695E-00	0.2517973E-00	0.2351850E-00	0.2060240E-00
0.1315595E-00	0.1597554E-00	0.1488987E-00	0.1338234E-00	0.1202361E-00	0.1047879E-00	0.7845344E-01
0.5508057E-01	0.3173844E-01	0.1498840E-01	0.1743589E-03	-0.7804717E-02	-0.1474589E-01	-0.2088260E-01
-0.2535692E-01	-0.3156098E-01	-0.	-0.2862473E-01	-0.3646762E-01	-0.4118074E-01	-0.4570729E-01
-0.	-0.	0.2461376E-02	-0.5668983E-01	-0.	-0.	-0.
-0.	0.9900107E-02	0.9280454E-02	0.1170880E-01	0.1274713E-01	-0.	0.1369403E-01
0.1490933E-01	0.1693859E-01	0.1851066E-01	0.1948536E-01	0.1904588E-01	0.1690978E-01	0.1355013E-01
0.9125567E-02	0.3645139E-02	0.5704604E-02	0.8572042E-03	-0.	0.7019938E-03	-0.3253069E-02
-0.6199194E-02	-0.7639264E-02	-0.7565240E-02	-0.6021065E-02	-0.3218745E-02	0.5780457E-03	0.4972651E-02
-0.9400754E-03	-0.1870434E-03	-0.	-0.1638672E-03	0.4407118E-03	0.8854777E-03	0.1085725E-02
0.1075507E-02	0.8357506E-03	0.4282601E-03	-0.9172828E-04	-0.6611961E-03	-0.5647101E-02	-0.9097231E-03
-0.	-0.7602015E-03	0.3113978E-02	0.6002183E-02	0.7380360E-02	0.7289028E-02	0.5741454E-02
0.2998741E-02	-0.6717117E-03	-0.4899505E-02	0.7381782E-03	0.9745569E-04	-0.	0.7411951E-04
-0.4381202E-03	-0.7997726E-03	-0.9673798E-03	-0.9324118E-03	-0.7179928E-03	-0.3413034E-03	0.1712797E-03
0.7809577E-03	0.4081678E-02	0.2922388E-03	0.	0.1678374E-03	-0.2995700E-02	-0.5457679E-02
-0.6754864E-02	-0.6818452E-02	-0.5639217E-02	-0.3408060E-02	-0.3938786E-03	0.3057655E-02	0.3036511E-02
0.1622117E-03	0.	0.6236003E-04	-0.2370225E-02	-0.4309196E-02	-0.5388996E-02	-0.5511424E-02
-0.4547692E-02	-0.2916432E-02	-0.5315102E-03	0.2208550E-02	-0.4355013E-02	-0.5215076E-03	0.
-0.3920382E-03	0.2830704E-02	0.5386016E-02	0.6780816E-02	0.6994225E-02	0.5925923E-02	0.3738585E-02
0.6460027E-03	-0.2998250E-02	-0.3271908E-02	-0.2929364E-03	0.	-0.1943287E-03	0.2281935E-02
0.4202625E-02	0.5200730E-02	0.5277852E-02	0.4396190E-02	0.2700241E-02	0.3479358E-03	-0.2415448E-02
0.1008470E-00	0.8767049E-01	0.7665315E-01	0.6530258E-01	0.5578844E-01	0.5217736E-01	0.4583838E-01
0.4052184E-01	0.3578183E-01	0.3342094E-01	0.3012821E-01	0.2710628E-01	0.2363811E-01	0.1771540E-01
0.1268438E-01	0.7204666E-02	0.5897616E-03	0.9148506E-04	-0.1708207E-02	-0.3282463E-02	-0.4669027E-02
-0.5910699E-02	-0.7090373E-02	0.	-0.6423738E-02	-0.8203396E-02	-0.9276866E-02	-0.1030426E-01
-0.1744006E-06	0.	0.4930729E-03	-0.1275600E-01	0.	0.	0.
0.	0.2851965E-02	0.2332268E-02	0.3407393E-02	0.3595247E-02	0.	0.3772776E-02
0.4008153E-02	0.4414353E-02	0.4730989E-02	0.4908805E-02	0.4754555E-02	0.4209023E-02	0.3388431E-02
0.2335982E-02	0.1060166E-02	-0.1043456E-03	0.4598466E-02	0.5297722E-14	0.4730123E-02	0.8271077E-02
0.1017279E-01	0.9803749E-02	0.7967018E-02	0.6215711E-02	0.5038647E-02	0.2483011E-02	-0.2355280E-02
0.1168757E-02	0.2227068E-01	0.4187357E-14	0.2286379E-01	0.3875406E-01	0.4819818E-01	0.4910364E-01
0.4280872E-01	0.3228656E-01	0.2012678E-01	0.6965978E-02	-0.5388399E-02	-0.1753594E-02	-0.4791876E-02
0.6203817E-15	-0.4870705E-02	-0.7110207E-02	-0.8701093E-02	-0.9646814E-02	-0.9447351E-02	-0.7184952E-02
-0.3266345E-02	-0.7830987E-03	-0.1900433E-02	-0.3217914E-02	-0.2296454E-01	-0.9151221E-16	-0.2350283E-01
-0.3809664E-01	-0.4697360E-01	-0.4886756E-01	-0.4403098E-01	-0.3295852E-01	-0.1801051E-01	-0.4842357E-02
0.1442613E-02	0.4059391E-02	0.5311268E-02	0.6675020E-15	0.5498663E-02	0.8831686E-02	0.1256337E-01
0.1524496E-01	0.1643539E-01	0.1667598E-01	0.1593870E-01	0.1242176E-01	0.5282254E-02	-0.8112240E-02
-0.8336924E-02	0.1087118E-15	-0.8555387E-02	-0.1192059E-01	-0.1693385E-01	-0.2204907E-01	-0.2542118E-01
-0.2535792E-01	-0.2140474E-01	-0.1576275E-01	-0.1082559E-01	-0.5810196E-02	-0.5441050E-02	0.1136728E-14
-0.5568286E-02	-0.7386626E-02	-0.1057470E-01	-0.1418581E-01	-0.1678686E-01	-0.1688534E-01	-0.1413439E-01
-0.1059049E-01	-0.8177659E-02	0.5279186E-02	0.6732464E-02	-0.6347447E-16	0.6996966E-02	0.1146484E-01
0.1579204E-01	0.2098137E-01	0.2308420E-01	0.2342961E-01	0.2195834E-01	0.1696646E-01	0.7790388E-02
-0.8298694E-04	-0.8203117E-04	-0.8116486E-04	-0.8116487E-04	0.1324117E-03	0.6925920E-04	-0.4850911E-02
-0.4832807E-02	0.8074390E-03	0.8087403E-03	0.4719404E-02	0.4700320E-02	-0.7842356E-03	-0.7753219E-03
-0.2756829E-02	-0.1892656E-02	-0.2035330E-02	-0.1422955E-02	0.2704886E-02	0.1813221E-02	0.2023477E-02
0.1444960E-02	0.1265032E-04	-0.9049640E-05	0.3866627E-04	0.3124308E-06	-0.4423721E-02	0.1580817E-02
-0.4732877E-03	-0.5087555E-04	-0.6599268E-04	0.4159232E-04	0.3314764E-03	0.8259040E-03	-0.3720818E-02
-0.5703272E-04	-0.4956151E-04	0.2841500E-05	0.5593956E-02	-0.2165668E-02	-0.9390976E-03	-0.5978607E-04
-0.3962583E-04	-0.7496619E-04	0.9212772E-03	-0.1371666E-02	0.2232914E-02	-0.5455942E-04	-0.5912583E-04
-0.3328632E-04	0.2086880E-02	0.2953827E-03	-0.1905964E-02	-0.2977926E-05	0.3621595E-04	0.4505510E-04
0.2425535E-02	-0.2543919E-02	-0.1713744E-03	[illegible]4414527E-04	-0.9111030E-05	0.3298119E-04	-0.2093169E-02
-0.1197464E-02	0.1696137E-02	0.1269105E-05	-0.3574205E-04	0.1105619E-04	-0.2232306E-02	0.1741037E-02
-0.2996981E-04	-0.4424727E-04	0.8876213E-05	0.2630829E-04	0.1144731E-00	0.9659154E-01	0.8186160E-01
0.6585152E-01	0.4874889E-01	-0.8907394E-04	-0.5030511E-04	-0.2489386E-04	-0.9532597E-05	0.2435536E-05
-0.8312139E-04						

0.8130362E-02	0.7046017E-02	0.6146554E-02	0.5206785E-02	0.4426809E-02	0.4130161E-02	0.3609944E-02
0.3177056E-02	0.2779665E-02	0.2585708E-02	0.2306226E-02	0.2060830E-02	0.1778064E-02	0.1299073E-02
0.8822081E-03	0.4400405E-03	0.1300617E-03	-0.1456138E-03	-0.2946012E-03	-0.4282032E-03	-0.5445290E-03
-0.6496305E-03	-0.7450157E-03	0.	-0.6886535E-03	-0.8446349E-03	-0.9351983E-03	-0.1021772E-02
0.	0.	0.5314832E-04	-0.1252959E-02	0.	0.	0.
0.	0.1691391E-03	0.2275460E-03	0.1793304E-03	0.1854527E-03	0.	0.1921680E-03
0.2021905E-03	0.2218891E-03	0.2391914E-03	0.2499614E-03	0.2398958E-03	0.1994792E-03	0.1297671E-03
0.2752736E-04	-0.1458083E-03	0.8953900E-04	0.1898713E-03	0.	0.1810712E-03	0.2415052E-03
0.2510100E-03	0.1813631E-03	0.7617452E-04	-0.6817047E-04	-0.2359673E-03	-0.4088659E-03	-0.5841561E-03
-0.3668247E-03	-0.4166859E-03	0.	-0.4075739E-03	-0.4269826E-03	-0.3798706E-03	-0.2612206E-03
-0.9932380E-04	0.9019163E-04	0.2968251E-03	0.5019293E-03	0.7015134E-03	0.1119171E-03	0.2987881E-03
0.	0.2893816E-03	0.4224867E-03	0.4709198E-03	0.4347943E-03	0.3213704E-03	0.1451513E-03
-0.6802938E-04	-0.3103943E-03	-0.5645226E-03	0.2313085E-03	-0.4456083E-04	0.	-0.4851338E-04
-0.2640780E-03	-0.4046275E-03	-0.4374130E-03	-0.3693378E-03	-0.2244689E-03	-0.1648308E-04	0.2432287E-03
0.5739966E-03	0.2012900E-03	0.3173516E-04	-0.	0.2230771E-04	-0.1212458E-03	-0.2286898E-03
-0.2984079E-03	-0.3085593E-03	-0.2691067E-03	-0.1913430E-03	-0.8040969E-04	0.5059736E-04	-0.1830783E-03
-0.5641052E-04	-0.	-0.4387889E-04	0.5688195E-04	0.1695879E-03	0.2113387E-03	0.2247471E-03
0.1829086E-03	0.9576471E-04	-0.2812125E-04	-0.1799777E-03	-0.1544602E-03	-0.1523913E-03	-0.
-0.1577571E-03	-0.1368649E-03	-0.1090727E-03	-0.5783455E-04	0.9294657E-05	0.7544241E-04	0.1362562E-03
0.1381036E-03	0.2350480E-03	0.2162779E-03	0.2069080E-03	-0.	0.1996138E-03	0.1670360E-03
0.1387178E-03	0.8426643E-04	0.1426646E-04	-0.6778602E-04	-0.1655647E-03	-0.2634293E-03	-0.3655176E-03
0.1063541E-03	0.1287763E-03	0.1630852E-03	0.1822818E-03	0.1958835E-03	0.2126608E-03	0.2137491E-03
0.2216648E-03	0.2324046E-03	0.2360137E-03	0.2190586E-03	0.2262309E-03	0.2143603E-03	0.2017537E-03
0.1671360E-03	0.1546665E-03	0.1400417E-03	0.1257558E-03	0.1067401E-03	0.1247920E-03	0.1024424E-03
0.8831066E-04	0.7906461E-04	-0.	0.7838261E-04	0.7281638E-04	0.7142043E-04	0.5161868E-04
-0.1978541E-02	-0.	-0.4796281E-05	0.1421771E-03	-0.	-0.	-0.
-0.	0.6469602E-03	-0.2974602E-03	0.1108742E-02	0.1094743E-02	-0.	0.1085440E-02
0.1075326E-02	0.1051731E-02	0.1005161E-02	0.9043294E-03	0.7271100E-03	0.5166780E-03	0.3223502E-03
0.1828487E-03	0.1857830E-03	-0.1359639E-00	-0.1507313E-00	0.1413276E-15	-0.1505576E-00	-0.1514499E-00
-0.1344360E-00	-0.9968253E-01	-0.5218224E-01	0.7994178E-03	0.5101694E-01	0.8946821E-01	0.1102982E-00
-0.1341295E-00	-0.1461581E-00	0.8408147E-15	-0.1458904E-00	-0.1444615E-00	-0.1256555E-00	-0.9005425E-01
-0.4278290E-01	0.8933272E-02	0.5706194E-01	0.9299678E-01	0.1115021E-00	-0.1354890E-00	-0.1502666E-00
0.1351414E-16	-0.1501007E-00	-0.1510355E-00	-0.1341271E-00	-0.9953777E-01	-0.5223263E-01	0.5829390E-03
0.5069230E-01	0.8912531E-01	0.1100469E-00	-0.1345243E-00	-0.1469427E-00	0.1380152E-15	-0.1466822E-00
-0.1455121E-00	-0.1268093E-00	-0.9113668E-01	-0.4365912E-01	0.8343533E-02	0.5677712E-01	0.9293914E-01
0.1115288E-00	-0.1236291E-00	-0.1147057E-00	-0.3235984E-16	-0.1135501E-00	-0.9209352E-01	-0.5878046E-01
-0.1785781E-01	0.2505996E-01	0.6411669E-01	0.9396945E-01	0.1103936E-00	0.1134142E-00	-0.1227544E-00
-0.1116062E-00	-0.1317978E-16	-0.1102865E-00	-0.8538413E-01	-0.4828473E-01	-0.4433381E-02	0.3979873E-01
0.7819688E-01	0.1055209E-00	0.1180202E-00	0.1166248E-00	-0.1230556E-00	-0.1137855E-00	0.2285758E-16
-0.1126166E-00	-0.9068738E-01	-0.5693390E-01	-0.1579551E-01	0.2707094E-01	0.6579688E-01	0.9513883E-01
0.1109909E-00	0.1135434E-00	-0.1223540E-00	-0.1108021E-00	0.1875815E-16	-0.1094598E-00	-0.8399313E-01
-0.4534975E-01	-0.2154138E-02	0.4214011E-01	0.8029690E-01	0.1071219E-00	0.1189629E-00	0.1168925E-00
0.3124031E-04	0.3145288E-04	0.3164305E-04	0.3164305E-04	-0.1091043E-03	-0.1496128E-03	0.1086482E-02
0.1081633E-02	-0.8808696E-03	-0.8781146E-03	0.1293634E-02	0.1286884E-02	-0.1277720E-02	-0.1271893E-02
-0.3195932E-03	-0.4683501E-03	0.2582223E-03	0.4388304E-03	-0.7757306E-04	-0.2021751E-03	0.2876885E-03
0.4351080E-03	-0.3446440E-04	0.1003834E-05	0.1539393E-05	0.1249067E-02	0.1805403E-02	-0.8442537E-01
0.9953635E-01	0.1259379E-02	0.1799377E-03	0.3695649E-04	-0.5304117E-03	-0.8478223E-01	0.9845938E-01
0.1261663E-02	0.1596707E-03	0.7127769E-04	0.2105701E-02	-0.8396562E-01	0.9917212E-01	0.1259519E-02
0.1775528E-03	0.3166500E-04	-0.9345604E-03	-0.8509986E-01	0.9803483E-01	0.1261811E-02	0.1566777E-03
0.7566880E-04	0.1340283E-02	0.5430282E-01	-0.1168940E-02	-0.3068261E-04	0.6707572E-04	0.1441301E-02
0.1538237E-02	0.5463707E-01	-0.1051366E-02	0.1162682E-04	0.4484402E-04	0.1464333E-02	0.1688704E-02
0.5395228E-01	-0.1084493E-02	-0.2645180E-04	0.6407607E-04	0.1440087E-02	0.9988839E-03	0.5421521E-01
-0.1050382E-02	0.9839464E-05	0.4649508E-04	0.1464035E-02	0.1907441E-02	0.1592606E-02	0.1333656E-02
0.1068800E-02	0.7500960E-03	-0.1959799E-03	-0.1393391E-03	-0.9069328E-04	-0.3934573E-04	0.2241467E-04
0.3089018E-04						

SA-8 RUN #3 MODE 16 XN - .9730964

0.2498333E-01	0.2039507E-01	0.1662062E-01	0.1282580E-01	0.9772223E-02	0.8664898E-02	0.6676372E-02
0.5132472E-02	0.3866738E-02	0.3272233E-02	0.2723034E-02	0.2281259E-02	0.1856042E-02	0.1171290E-02
0.6508792E-03	0.1447788E-03	-0.1692653E-03	-0.4062720E-03	-0.4553305E-03	-0.4324622E-03	-0.3596906E-03
-0.2444446E-03	-0.7969470E-04	0.	-0.1606355E-03	0.7404282E-04	0.2344041E-03	0.4060577E-03
0.	0.	-0.3049572E-04	0.2621104E-03	0.	0.	0.
0.	0.1772785E-02	0.2409337E-02	0.8173004E-03	0.2629465E-03	0.	-0.2106893E-03
-0.7818117E-03	-0.1662385E-02	-0.2294167E-02	-0.2660525E-02	-0.2482623E-02	-0.1696086E-02	-0.4906920E-03
0.1041665E-02	0.3075008E-02	0.1633704E-02	0.5966957E-02	0.	0.6075340E-02	0.8963064E-02
0.1005121E-01	0.8913426E-02	0.5917488E-02	0.1420451E-02	-0.3968324E-02	-0.9764561E-02	-0.1564368E-01
-0.2725067E-02	-0.6297673E-02	0.	-0.6380659E-02	-0.8633464E-02	-0.9207665E-02	-0.7827629E-02
-0.4648844E-02	-0.1883014E-03	0.5111408E-02	0.1081604E-01	0.1661634E-01	-0.2720535E-03	0.5112484E-02
0.	0.5260157E-02	0.9058614E-02	0.1088024E-01	0.1014480E-01	0.7048789E-02	0.2060768E-02
-0.4188335E-02	-0.1110501E-01	-0.1824233E-01	0.1417947E-02	-0.4574590E-02	0.	-0.4731511E-02
-0.8983515E-02	-0.1111332E-01	-0.1063037E-01	-0.7647109E-02	-0.2747621E-02	0.3525262E-02	0.1060150E-01
0.1301174E-01	0.3293587E-02	0.1487349E-02	-0.	0.1426064E-02	-0.1490296E-03	-0.1444156E-02
-0.2251569E-02	-0.2382071E-02	-0.1996977E-02	-0.1186566E-02	-0.1463799E-03	0.9683280E-03	-0.7927629E-03
-0.1038183E-03	-0.	-0.9305653E-04	0.3955826E-03	0.6726984E-03	0.7236624E-03	0.7409451E-03
0.6988871E-03	0.6763212E-03	0.6089091E-03	0.4358350E-03	-0.3257360E-02	-0.1715657E-02	-0.
-0.1650960E-02	-0.2108614E-03	0.1122772E-02	0.2087767E-02	0.2581638E-02	0.2482937E-02	0.1766159E-02
0.4554323E-03	-0.1265728E-02	0.6899176E-03	0.3979743E-03	-0.	0.3876365E-03	0.6320219E-04
-0.3250082E-03	-0.7245097E-03	-0.9897700E-03	-0.1105315E-02	-0.1022781E-02	-0.8308275E-03	-0.6331517E-03
-0.1308369E-01	-0.1508256E-01	-0.1261844E-01	-0.1010882E-01	-0.8069016E-02	-0.7327855E-02	-0.5991964E-02
-0.4936888E-02	-0.4051209E-02	-0.3628221E-02	-0.3135212E-02	-0.2720646E-02	-0.2257027E-02	-0.1488174E-02
-0.8375146E-03	-0.1703037E-03	0.7594472E-03	0.6653383E-03	0.8634480E-03	0.9953834E-03	0.1126397E-02
0.1227311E-02	0.1316763E-02	-0.	0.1273137E-02	0.1391752E-02	0.1456809E-02	0.1529007E-02
0.3332315E-05	-0.	-0.7493381E-04	0.1823734E-02	-0.	-0.	-0.
-0.	0.1349522E-02	-0.2046724E-02	0.2908049E-02	0.2755688E-02	-0.	0.2626957E-02
0.2468993E-02	0.2191218E-02	0.1895414E-02	0.1492886E-02	0.9752601E-03	0.4702400E-03	0.6267023E-04
-0.1708535E-03	-0.7664167E-06	-0.1467368E-02	0.6550397E-02	0.1539438E-13	0.6764330E-02	0.1252773E-01
0.1477298E-01	0.1225389E-01	0.7260951E-02	0.3969026E-02	0.3050605E-02	-0.1958883E-02	-0.1425835E-01
-0.1244832E-02	0.4452369E-02	0.1213174E-13	0.4624774E-02	0.9121751E-02	0.1114779E-01	0.9234787E-02
0.5110700E-02	0.2745586E-02	0.2733128E-02	-0.1678498E-02	-0.1428061E-01	0.1798401E-02	0.9117046E-02
0.1796305E-14	0.9303973E-02	0.1435581E-01	0.1587789E-01	0.1272358E-01	0.7275989E-02	0.3760391E-02
0.2942836E-02	-0.1535705E-02	-0.1280752E-01	-0.4135810E-03	0.5015612E-02	-0.2737351E-15	0.5163706E-02
0.9190555E-02	0.1058158E-01	0.8019425E-02	0.3566804E-02	0.1253175E-02	0.1831943E-02	-0.1358956E-02
-0.1214930E-01	-0.1904468E-01	-0.5420724E-01	0.1917041E-14	-0.5717930E-01	-0.1137116E-00	-0.1755235E-00
-0.2237607E-00	-0.2451193E-00	-0.2322333E-00	-0.1871478E-00	-0.1241571E-00	-0.6120278E-01	0.1107829E-01
0.4890919E-01	0.4265053E-15	0.5185385E-01	0.1089585E-00	0.1675740E-00	0.2084095E-00	0.2219158E-00
0.2073255E-00	0.1679447E-00	0.1067484E-00	0.3303947E-01	-0.1711424E-01	-0.5189397E-01	0.3236528E-14
-0.5478893E-01	-0.1101764E-00	-0.1705578E-00	-0.2175755E-00	-0.2384491E-00	-0.2259551E-00	-0.1822049E-00
-0.1212657E-00	-0.6065177E-01	0.1201131E-01	0.5089225E-01	-0.2174495E-15	0.5389315E-01	0.1121165E-00
0.1716498E-00	0.2129015E-00	0.2263777E-00	0.2113549E-00	0.1714259E-00	0.1099550E-00	0.3664250E-01
-0.5172542E-04	-0.4926605E-04	-0.4705728E-04	-0.4705726E-04	0.2470004E-03	0.1495670E-03	0.3518587E-01
0.3501476E-01	-0.3406849E-01	-0.3389258E-01	0.3252729E-01	0.3235050E-01	-0.3403231E-01	-0.3382319E-01
0.6792533E-03	0.8354547E-03	0.6179239E-03	0.8300645E-03	-0.9583806E-03	-0.1333435E-02	-0.4256426E-03
-0.5372162E-03	0.8799176E-05	0.3807072E-05	-0.1535097E-04	-0.8444636E-04	0.3286077E-01	0.1820299E-01
0.7169576E-03	-0.3146676E-03	-0.4305759E-04	-0.6378611E-03	-0.2956865E-01	-0.5156397E-02	-0.2044879E-01
-0.2080185E-03	-0.2668586E-03	0.4778763E-03	0.3070469E-01	0.1018772E-01	0.8907952E-03	-0.3166526E-03
-0.5020839E-[illegible]	-0.6099756E-03	-0.2842479E-01	-0.5235960E-02	-0.1217495E-01	-0.2060515E-03	-0.2249061E-03
0.4926185E-03	0.1711025E-01	-0.8538390E-02	0.4619079E-04	-0.4411513E-03	0.1831424E-03	-0.2633909E-03
-0.1258295E-01	-0.5812184E-02	0.3305565E-03	0.4172882E-03	-0.2160638E-03	0.2215364E-03	0.9241776E-02
-0.8745140E-02	-0.1360975E-02	-0.4366519E-03	0.2210336E-03	-0.2737350E-03	-0.1294629E-01	0.2053148E-02
0.1584497E-03	0.4495336E-03	-0.2122595E-03	0.2551179E-03	0.1441329E-02	0.1136578E-02	0.8748876E-03
0.5989007E-03	0.3171762E-03	-0.2849325E-02	-0.2245941E-02	-0.1754045E-02	-0.1261741E-02	-0.6932912E-03
-0.5207468E-04						

SA-8 RUN #3 MODE 17 XN = 6317079

0.1005291E-00	0.7573286E-01	0.5557799E-01	0.3555817E-01	0.1990939E-01	0.1441082E-01	0.4419882E-02
-0.2380530E-02	-0.8411618E-02	-0.1084897E-01	-0.1211074E-01	-0.1281107E-01	-0.1298778E-01	-0.1299379E-01
-0.1258774E-01	-0.1169067E-01	-0.1086513E-01	-0.9837068E-02	-0.8860504E-02	-0.7672806E-02	-0.6311184E-02
-0.4838263E-02	-0.3158348E-02	-0.	-0.4068139E-02	-0.1587184E-02	0.3495675E-04	0.1681620E-02
-0.	-0.	-0.3072577E-03	0.5734864E-02	-0.	-0.	-0.
-0.	0.1330341E-01	0.1411806E-01	0.1084357E-01	0.9210025E-02	-0.	0.7603419E-02
0.5339411E-02	0.8992009E-03	-0.3511288E-02	-0.7910440E-02	-0.1051599E-01	-0.9452773E-02	-0.4837368E-02
0.3577870E-02	0.1870880E-01	-0.4451641E-03	-0.1949335E-03	-0.	-0.1708274E-03	-0.6650085E-04
0.1486502E-04	-0.3139257E-03	0.4091360E-03	0.1069584E-02	0.2343495E-02	0.4105341E-02	0.5994218E-02
-0.3511515E-01	-0.2274467E-01	-0.	-0.2222963E-01	-0.1037142E-01	0.1139964E-02	0.9529300E-02
0.1582594E-01	0.1734312E-01	0.1500540E-01	0.9375503E-02	0.1740722E-02	0.1317771E-03	0.1229561E-03
-0.	0.1474033E-03	0.2058375E-03	0.8654945E-04	-0.4942118E-03	-0.1833051E-02	-0.3341452E-02
-0.4752832E-02	-0.5713224E-02	-0.6327833E-02	0.3441735E-01	0.2169337E-01	-0.	0.2131901E-01
0.9442668E-02	-0.1851683E-02	-0.1010538E-01	-0.1577638E-01	-0.1710198E-01	-0.1435583E-01	-0.7770280E-02
0.1437873E-02	0.2279212E-01	0.1255656E-01	0.	0.1219319E-01	0.2967476E-02	-0.4998039E-02
-0.1002994E-01	-0.1171125E-01	-0.9957762E-02	-0.5500871E-02	0.4970062E-03	0.7054354E-02	-0.2472069E-01
-0.1240167E-01	0.	-0.1191147E-01	-0.1161940E-02	0.7634106E-02	0.1255724E-01	0.1560864E-01
0.1480812E-01	0.1136478E-01	0.5418528E-02	-0.2441804E-02	-0.2611340E-01	-0.1734070E-01	0.
-0.1697698E-01	-0.8022170E-02	0.1087260E-02	0.8384461E-02	0.1355511E-01	0.1463309E-01	0.1151668E-01
0.4370731E-02	-0.5541242E-02	0.2590169E-01	0.1641139E-01	0.	0.1599712E-01	0.6424049E-02
-0.3308985E-02	-0.1089326E-01	-0.1647915E-01	-0.1781176E-01	-0.1506267E-01	-0.9075821E-02	-0.1379853E-02
0.1761072E-00	0.1461428E-00	0.1214883E-00	0.9637670E-01	0.7631756E-01	0.6890100E-01	0.5549756E-01
0.4490182E-01	0.3605034E-01	0.3174114E-01	0.2730876E-01	0.2374246E-01	0.1982777E-01	0.1355686E-01
0.8549167E-02	0.3626098E-02	-0.6905523E-02	-0.2498599E-02	-0.3172445E-02	-0.3312835E-02	-0.2943556E-02
-0.2134216E-02	-0.4326020E-03	0.	-0.9490817E-03	0.5545511E-03	0.1772344E-02	0.3096419E-02
0.5642333E-05	0.	-0.3534469E-03	0.8906574E-02	0.	0.	0.
0.	-0.7445735E-01	-0.4719965E-01	-0.1109812E-00	-0.1306753E-00	0.	-0.1478521E-00
-0.1586739E-00	-0.1996823E-00	-0.2183304E-00	-0.2208222E-00	-0.1955342E-00	-0.1475529E-00	-0.9249226E-01
-0.4104974E-01	-0.1913253E-01	-0.2954888E-01	0.2259876E-01	0.7903203E-13	0.2401380E-01	0.6159534E-01
0.7745928E-01	0.6414820E-01	0.3704052E-01	0.1844058E-01	0.1509643E-01	-0.2607271E-02	-0.4735402E-01
-0.2172713E-01	-0.2896862E-01	0.6245019E-13	-0.2887178E-01	-0.2941585E-01	-0.2699652E-01	-0.2705162E-01
-0.2460155E-01	-0.5015417E-02	0.2681323E-01	0.2756489E-01	-0.2870148E-01	0.7347582E-02	-0.2327887E-01
0.9179300E-14	-0.2408792E-01	-0.4574796E-01	-0.6083361E-01	-0.6950814E-01	-0.6577274E-01	-0.3604614E-01
0.1030248E-01	0.2522000E-01	-0.2112495E-01	-0.7571689E-02	0.1453921E-01	-0.1352765E-14	0.1513824E-01
0.3115827E-01	0.3512464E-01	0.2097415E-01	0.7111877E-03	-0.4928161E-02	0.7919816E-02	0.4831800E-02
-0.3348173E-01	-0.3011556E-01	0.2614062E-01	0.9926454E-14	0.2993874E-01	0.1073891E-00	0.1776774E-00
0.2136840E-00	0.2137571E-00	0.1903091E-00	0.1540133E-00	0.9181742E-01	0.4376733E-02	-0.3813295E-01
-0.9173513E-02	0.1777589E-14	-0.7004711E-02	0.3540985E-01	0.7478012E-01	0.9506677E-01	0.9657196E-01
0.9158573E-01	0.8502352E-01	0.5407005E-01	-0.1317161E-01	0.1162556E-02	-0.3321450E-01	0.1690769E-13
-0.3626181E-01	-0.9389504E-01	-0.1602544E-00	-0.2146385E-00	-0.2382996E-00	-0.2121527E-00	-0.1432111E-00
-0.7743444E-01	-0.5598353E-01	0.7647013E-02	-0.2580665E-02	-0.8286245E-15	-0.3858561E-02	-0.2569421E-01
-0.5512435E-01	-0.8802607E-01	-0.1084212E-00	-0.9903816E-01	-0.6004047E-01	-0.2734130E-01	-0.3146374E-01
-0.1236631E-02	-0.1203520E-02	-0.1172852E-02	-0.1172852E-02	0.1758684E-02	0.9010877E-03	0.2891696E-02
0.2847031E-02	-0.2991193E-01	-0.2961690E-01	-0.1572740E-02	-0.1504705E-02	0.2711891E-01	0.2695422E-01
0.1015132E-01	0.1348580E-01	-0.1307093E-02	-0.2224812E-02	-0.1113505E-01	-0.1502819E-01	0.1532938E-02
0.3108084E-02	0.1726429E-03	-0.9690070E-04	-0.1353027E-03	0.7850705E-05	0.2789955E-01	0.2412962E-01
-0.1653210E-01	-0.8706120E-03	-0.8547241E-03	-0.6455290E-03	-0.1991083E-01	-0.1169683E-01	-0.3345012E-01
-0.9061385E-03	-0.9007571E-03	0.1896942E-03	-0.6877540E-02	-0.3901031E-01	0.1053733E-01	-0.9460687E-03
-0.4444089E-03	-0.1025326E-03	0.3569259E-01	-0.4492166E-02	0.2381474E-01	-0.9153087E-03	-0.4876397E-03
-0.8575401E-03	0.2019236E-01	-0.1717387E-01	0.3606321E-03	0.6808361E-03	-0.1962465E-03	0.4573464E-03
-0.2637877E-01	-0.3317607E-01	0.6452219E-02	-0.5105003E-04	-0.2733913E-04	0.4480093E-03	-0.1936271E-01
0.8550399E-03	-0.3659454E-02	-0.7696219E-03	0.2279722E-03	0.4117575E-03	0.2851081E-01	0.1991318E-01
-0.9554686E-02	0.9794593E-04	-0.3643029E-06	0.5591068E-03	-0.7870044E-02	-0.8824156E-02	-0.9573195E-02
-0.1013391E-01	-0.1051118E-01	0.2387197E-01	0.2204657E-01	0.1899839E-01	0.1485138E-01	0.9394019E-02
-0.1261765E-02						

SA-8 RUN #3 MODE 18 XN = .3017320

0.2735209E-01	0.2350754E-01	0.2031526E-01	0.1701940E-01	0.1429112E-01	0.1326245E-01	0.1145316E-01
0.9960923E-02	0.8635888E-02	0.7990949E-02	0.7115345E-02	0.6343257E-02	0.5470996E-02	0.3991835E-02
0.2723890E-02	0.1362323E-02	0.4160825E-03	-0.4219228E-03	-0.8808184E-03	-0.1291460E-02	-0.1656123E-02
-0.1988963E-02	-0.2306034E-02	0.	-0.2126022E-02	-0.2615903E-02	-0.2908517E-02	-0.3190193E-02
0.	0.	0.2012213E-03	-0.3886453E-02	0.	0.	0.
0.	-0.1143155E-03	-0.2895445E-03	0.1493496E-03	0.2961472E-03	0.	0.4181098E-03
0.5582642E-03	0.7491773E-03	0.8451510E-03	0.8277025E-03	0.6347846E-03	0.3027189E-03	-0.1017505E-03
-0.5347720E-03	-0.1143987E-02	0.2004056E-03	0.2351191E-02	0.	0.2404651E-02	0.4183417E-02
0.5563261E-02	0.6395439E-02	0.6418372E-02	0.5788960E-02	0.4455311E-02	0.2584905E-02	0.4517981E-03
-0.2007534E-02	-0.1654256E-02	0.	-0.1612751E-02	-0.1058626E-02	-0.3041716E-03	0.5575003E-03
0.1131868E-02	0.1393396E-02	0.1126266E-02	0.2869114E-03	-0.9761755E-03	0.1070230E-02	0.6110376E-03
0.	0.5731205E-03	0.1519998E-03	-0.2415379E-03	-0.3992796E-03	-0.5021601E-03	-0.3442665E-03
-0.3534461E-04	0.4250519E-03	0.1058796E-02	0.1801361E-02	0.1957970E-02	0.	0.1945735E-02
0.1599622E-02	0.1035789E-02	0.2335872E-03	-0.7149699E-03	-0.1326355E-02	-0.1548157E-02	-0.1317299E-02
-0.7632368E-03	-0.4124471E-03	-0.1045568E-02	-0.	-0.1066717E-02	-0.1517065E-02	-0.1790171E-02
-0.1786751E-02	-0.1764528E-02	-0.1504058E-02	-0.1121088E-02	-0.6330586E-03	-0.1140447E-03	-0.1749198E-02
-0.5282184E-03	-0.	-0.4644549E-03	0.7379502E-03	0.1942425E-02	0.2910936E-02	0.3354454E-02
0.3325256E-02	0.2773079E-02	0.1851587E-02	0.7579197E-03	0.7146814E-03	0.9810507E-03	-0.
0.9779531E-03	0.1164931E-02	0.1280910E-02	0.1435175E-02	0.1428353E-02	0.1433365E-02	0.1367756E-02
0.1221495E-02	0.9758919E-03	0.9010582E-03	-0.8493110E-03	-0.	-0.9262551E-03	-0.2585737E-02
-0.4125171E-02	-0.5197491E-02	-0.5806311E-02	-0.5479413E-02	-0.4194879E-02	-0.1927389E-02	0.1039620E-02
0.1217091E-01	0.1012253E-01	0.8457659E-02	0.6748811E-02	0.5358639E-02	0.4866166E-02	0.3950793E-02
0.3236763E-02	0.2641875E-02	0.2357439E-02	0.2014926E-02	0.1748240E-02	0.1433931E-02	0.9209806E-03
0.4547450E-03	0.2428411E-04	-0.6077454E-03	-0.5553134E-03	-0.6972717E-03	-0.7568990E-03	-0.8559356E-03
-0.9267811E-03	-0.9654781E-03	-0.	-0.9437129E-03	-0.1009683E-02	-0.1042988E-02	-0.1099607E-02
-0.1050898E-01	-0.	0.1157670E-03	-0.1110316E-02	-0.	-0.	-0.
-0.	0.1347587E-02	-0.2098306E-02	0.2609306E-02	0.2168428E-02	-0.	0.1779764E-02
0.1283612E-02	0.4189901E-03	-0.3583574E-03	-0.1107089E-02	-0.1643683E-02	-0.1802230E-02	-0.1674060E-02
-0.1274699E-02	-0.8421074E-03	-0.6839373E-01	0.3244353E-01	-0.5148464E-13	0.3489671E-01	0.1029694E-00
0.1299572E-00	0.1089931E-00	0.4848063E-01	-0.3346232E-01	-0.1067196E-00	-0.1318969E-00	-0.9785862E-01
-0.6391867E-01	0.3843397E-01	-0.3774817E-13	0.4081405E-01	0.1086291E-00	0.1337214E-00	0.1103116E-00
0.4781293E-01	-0.3524656E-01	-0.1088911E-00	-0.1335635E-00	-0.9792751E-01	-0.6679772E-01	0.3398998E-01
-0.6062262E-14	0.3642551E-01	0.1044976E-00	0.1315745E-00	0.1108177E-00	0.5045629E-01	-0.3140811E-01
-0.1047257E-00	-0.1301291E-00	-0.9643942E-01	-0.6823686E-01	0.3344169E-01	0.1447116E-14	0.3581521E-01
0.1033240E-00	0.1284217E-00	0.1052528E-00	0.4315745E-01	-0.3938878E-01	-0.1124391E-00	-0.1364617E-00
-0.1002700E-00	-0.1139116E-00	-0.7190263E-01	-0.6730721E-14	-0.6782394E-01	0.8077257E-02	0.9437063E-01
0.1591425E-00	0.1787506E-00	0.1441748E-00	0.6959680E-01	-0.7402414E-02	-0.5419477E-01	-0.1124697E-00
-0.7164147E-01	-0.1341877E-14	-0.6771644E-01	0.5129211E-02	0.8759192E-01	0.1493049E-00	0.1675337E-00
0.1333545E-00	0.6049735E-01	-0.1356640E-01	-0.5621615E-01	-0.1099590E-00	-0.6827903E-01	-0.1093913E-13
-0.6422271E-01	0.1095421E-01	0.9632486E-01	0.1603593E-00	0.1794908E-00	0.1448894E-00	0.7061292E-01
-0.5868670E-02	-0.5212032E-01	-0.1124822E-00	-0.7138739E-01	0.7019053E-15	-0.6739826E-01	0.6384078E-02
0.9307430E-01	0.1528773E-00	0.1716063E-00	0.1372480E-00	0.6354960E-01	-0.1183494E-01	-0.5599925E-01
-0.4213318E-03	-0.4106307E-03	-0.4002476E-03	-0.4002476E-03	-0.2040386E-03	0.3404066E-04	-0.1475215E-02
-0.1455960E-02	0.1099179E-02	0.1083036E-02	-0.5694369E-03	-0.5504318E-03	0.6249159E-03	0.6053556E-03
-0.1241284E-03	-0.4957313E-04	-0.4619658E-03	-0.5201009E-03	0.2613331E-03	0.5731844E-03	-0.3113644E-03
-0.4234939E-03	-0.1233599E-04	0.1991643E-05	0.5041020E-05	-0.1486148E-02	0.1623383E-01	0.1184910E-00
-0.1582282E-00	-0.1047414E-02	-0.1018557E-02	0.4952939E-04	0.1910979E-01	0.1197322E-00	-0.1648820E-00
-0.1048354E-02	-0.9895380E-03	0.1039524E-04	0.1688370E-01	0.1213301E-00	-0.1666654E-00	-0.1046928E-02
-0.1018622E-02	0.3375711E-04	0.1849690E-01	0.1212401E-00	-0.1678403E-00	-0.1047405E-02	-0.1000953E-02
0.1096476E-04	-0.2089652E-01	-0.6428789E-01	-0.5078975E-02	0.2212090E-03	0.3122176E-03	-0.2724114E-02
-0.2011458E-01	-0.6242156E-01	-0.4784243E-02	0.1849208E-03	0.3197477E-03	-0.2735509E-02	-0.1811306E-01
-0.6282254E-01	-0.4658385E-02	0.2101853E-03	0.3021116E-03	-0.2724867E-02	-0.1879933E-01	-0.6527231E-01
-0.5076002E-02	0.1789659E-03	0.3268062E-03	-0.2752144E-02	0.6089654E-02	0.5009618E-02	0.4144124E-02
0.3295447E-02	0.2285909E-02	0.3015027E-03	0.1503114E-03	0.3958130E-04	-0.4240374E-04	-0.1160635E-03
-0.4339542E-03						

0.6447488E-01	0.5190493E-01	0.4162006E-01	0.3114729E-01	0.2277527E-01	0.1972930E-01	0.1422994E-01
0.9987838E-02	0.6418999E-02	0.4762485E-02	0.3203420E-02	0.2002145E-02	0.8345139E-03	-0.1024513E-02
-0.2515176E-02	-0.3864184E-02	-0.4749978E-02	-0.5409277E-02	-0.5560805E-02	-0.5551035E-02	-0.5379241E-02
-0.5101401E-02	-0.4664431E-02	0.	-0.4870254E-02	-0.4321453E-02	-0.3908960E-02	-0.3457094E-02
0.	0.	0.1461850E-03	-0.2117915E-02	0.	0.	0.
0.	0.5586226E-02	0.6252792E-02	0.3737588E-02	0.2597569E-02	0.	0.1532620E-02
0.1375189E-03	-0.2503015E-02	-0.4921080E-02	-0.7160293E-02	-0.8245807E-02	-0.7294303E-02	-0.4504596E-02
0.1738689E-03	0.7627100E-02	0.8699403E-02	0.8588857E-02	0.	0.8400134E-02	0.6526141E-02
0.2716821E-02	-0.9453665E-03	-0.4515239E-02	-0.6138510E-02	-0.5966009E-02	-0.3880572E-02	-0.1962331E-03
0.3536608E-02	0.2453228E-02	0.	0.2468624E-02	0.1247979E-02	-0.2405153E-03	-0.1174998E-02
-0.2336798E-02	-0.2521558E-02	-0.2431738E-02	-0.2483505E-02	-0.2994493E-02	-0.5485923E-02	0.5338080E-03
0.	0.5590089E-03	0.4345729E-02	0.5466916E-02	0.4738616E-02	0.2098204E-02	-0.3770662E-03
-0.2557463E-02	-0.3997022E-02	-0.4439724E-02	-0.4090422E-02	-0.5260473E-02	0.	-0.5208414E-02
-0.5031154E-02	-0.3132136E-02	0.5023790E-03	0.3722127E-02	0.6124301E-02	0.6218816E-02	0.3476661E-02
-0.1717345E-02	0.2153951E-03	-0.6273986E-02	-0.	-0.6378951E-02	-0.9534283E-02	-0.9067424E-02
-0.4970344E-02	0.2249533E-03	0.5622202E-02	0.9610165E-02	0.1195023E-01	0.1301863E-01	0.8566393E-02
0.5683012E-02	-0.	0.5641579E-02	0.3082382E-02	0.8435161E-03	-0.1046503E-02	-0.3583090E-02
-0.5991607E-02	-0.7694678E-02	-0.7551655E-02	-0.4865990E-02	-0.8271734E-02	-0.1232923E-01	-0.
-0.1236245E-01	-0.1322933E-01	-0.1039688E-01	-0.3803935E-02	0.3190734E-02	0.9361300E-02	0.1269572E-01
0.1291848E-01	0.1088465E-01	-0.4899066E-02	-0.8509576E-04	-0.	0.3519388E-04	0.3980771E-02
0.6745919E-02	0.7601531E-02	0.5199444E-02	0.1078448E-02	-0.3858082E-02	-0.7427687E-02	-0.8597600E-02
-0.4102770E-01	-0.2979623E-01	-0.2065923E-01	-0.1179073E-01	-0.5051235E-02	-0.2653935E-02	0.1422679E-02
0.4282817E-02	0.6281649E-02	0.7041311E-02	0.7020351E-02	0.6965198E-02	0.6522026E-02	0.5679754E-02
0.4638291E-02	0.3531211E-02	0.2652123E-02	0.1813447E-02	0.1182728E-02	0.8121757E-03	0.1523506E-03
-0.4445987E-03	-0.1026433E-02	-0.	-0.7515227E-03	-0.1548678E-02	-0.2040908E-02	-0.2655918E-02
0.3579772E-02	-0.	0.1451992E-03	-0.3896413E-02	-0.	-0.	-0.
-0.	0.5245473E-02	0.7017677E-02	0.4552741E-02	0.4657297E-02	-0.	0.4605516E-02
0.4288672E-02	0.3030628E-02	0.1171507E-02	-0.1238450E-02	-0.3345952E-02	-0.3892253E-02	-0.2883578E-02
-0.2080086E-03	0.2452142E-02	-0.8000222E-01	0.1955350E-01	-0.1927443E-12	0.2163322E-01	0.8455187E-01
0.1089691E-00	0.9743232E-01	0.4579594E-01	-0.5414690E-01	-0.1634709E-00	-0.1642937E-00	-0.8724507E-02
-0.1300481E-00	-0.9012426E-01	-0.1511024E-12	-0.8814994E-01	-0.4475193E-01	0.7327369E-02	0.6231347E-01
0.8933897E-01	0.4921635E-01	-0.4231956E-01	-0.7252361E-01	0.2775537E-01	-0.8291841E-01	0.1997813E-01
-0.2244113E-13	0.2207670E-01	0.8637933E-01	0.1097383E-00	0.9513616E-01	0.4008442E-01	-0.6203431E-01
-0.1714829E-00	-0.1703890E-00	-0.1198587E-01	-0.1132675E-00	-0.7675475E-01	0.3468550E-14	-0.7484984E-01
-0.3394436E-01	0.1616340E-01	0.6940948E-01	0.9465735E-01	0.5241812E-01	-0.4097515E-01	-0.7162663E-01
0.3157400E-01	-0.1387780E-00	-0.1583784E-00	-0.2434418E-13	-0.1569143E-00	-0.1404324E-00	-0.7108972E-01
0.3724121E-01	0.1323383E-00	0.1524996E-00	0.8829626E-01	0.2660625E-01	0.4623384E-01	-0.1499268E-00
-0.1583545E-00	-0.4535554E-14	-0.1669522E-00	-0.1484536E-00	-0.7748298E-01	0.3231982E-01	0.1299494E-00
0.1525582E-00	0.8810863E-01	0.2295303E-01	0.3958077E-01	-0.1545057E-00	-0.1708837E-00	-0.4117436E-13
-0.1593476E-00	-0.1483782E-00	-0.7437874E-01	0.3726903E-01	0.1342892E-00	0.1548805E-00	0.9016391E-01
0.2659225E-01	0.4244858E-01	-0.1403745E-00	-0.1540393E-00	0.2230829E-14	-0.1526823E-00	-0.1325123E-00
-0.6397928E-01	0.3947657E-01	0.1292772E-00	0.1451494E-00	0.7777349E-01	0.1496882E-01	0.3872002E-01
-0.3995495E-02	-0.3678344E-02	-0.3471687E-02	-0.3471687E-02	-0.3364891E-02	-0.1763145E-02	0.6212125E-02
0.6099708E-02	0.2235530E-02	0.1998545E-02	-0.5507228E-02	-0.5456667E-02	0.5260892E-02	0.4917605E-02
-0.4335892E-02	-0.7349181E-02	0.9838734E-02	0.1681022E-01	-0.1127047E-01	-0.1637802E-01	0.6907001E-02
0.1160456E-01	0.2376147E-03	0.9801429E-05	-0.6157868E-04	-0.8907720E-03	0.1621395E-01	0.1008038E-00
-0.6765453E-01	0.1278634E-02	0.1356794E-02	0.1254196E-03	-0.1033569E-01	0.9282858E-01	-0.1062310E-00
0.1225838E-02	0.6715030E-03	0.2708867E-03	0.5805657E-02	0.7878547E-01	-0.7472953E-01	0.1262989E-02
0.1320285E-02	0.2948015E-03	-0.4517985E-02	0.8435213E-01	-0.8236297E-01	0.1227033E-02	0.8443137E-03
0.2709224E-03	-0.2916025E-01	-0.4754291E-01	-0.1630837E-02	0.1396381E-04	0.5123497E-03	-0.4992343E-02
-0.1473548E-01	-0.5375185E-01	-0.1991011E-02	0.3963060E-03	0.3540901E-03	-0.4655051E-02	-0.5201776E-01
-0.5755595E-01	-0.6601116E-02	-0.7170771E-04	0.6916548E-03	-0.5257077E-02	-0.1960509E-01	-0.3282216E-01
-0.3534270E-02	0.4695151E-03	0.3701016E-03	-0.4548780E-02	0.2879304E-02	0.1447224E-02	0.3271739E-03
-0.7568908E-03	-0.1901738E-02	0.6308595E-02	0.7769859E-02	0.7909250E-02	0.6895246E-02	0.4979990E-02
-0.4193082E-02						

SA-8 RUN #3 MODE 20 XN = .1704550

0.4116195E-01	0.3293448E-01	0.2615422E-01	0.1950262E-01	0.1416357E-01	0.1226027E-01	0.8905429E-02
0.6337375E-02	0.4405933E-02	0.3509095E-02	0.2794311E-02	0.2192866E-02	0.1679763E-02	0.8374758E-03
0.2919984E-03	-0.3381074E-03	-0.6859783E-03	-0.9656865E-03	-0.1063435E-02	-0.1080020E-02	-0.1093793E-02
-0.1074215E-02	-0.1077586E-02	0.	-0.1089788E-02	-0.9997492E-03	-0.9726714E-03	-0.9550223E-03
0.	0.	0.1593319E-05	-0.7324457E-03	0.	0.	0.
0.	0.3251044E-03	0.1208083E-02	-0.5217772E-03	-0.1036888E-02	0.	-0.1520478E-02
-0.2159672E-02	-0.3266242E-02	-0.4143029E-02	-0.4676028E-02	-0.4388840E-02	-0.3186557E-02	-0.1446646E-02
0.5837589E-03	0.2678583E-02	-0.8022209E-03	-0.3181026E-02	0.	-0.3071758E-02	-0.3749759E-02
-0.2757505E-02	-0.1308792E-02	0.9387264E-03	0.2249166E-02	0.3260193E-02	0.3790485E-02	0.3632655E-02
-0.3564117E-02	-0.2513699E-02	0.	-0.2569907E-02	-0.1579262E-02	-0.4474653E-03	-0.7410224E-04
0.8051852E-03	0.7416308E-03	0.7898604E-03	0.1559349E-02	0.3392291E-02	-0.2051916E-02	-0.4826677E-02
0.	-0.4684072E-02	-0.5437234E-02	-0.3876289E-02	-0.1644561E-02	0.1285239E-02	0.2801839E-02
0.3305712E-02	0.2776460E-02	0.1150834E-02	0.3476506E-02	0.4502906E-02	0.	0.4465622E-02
0.4580486E-02	0.3376645E-02	0.4547261E-03	-0.1955175E-02	-0.3978723E-02	-0.3984901E-02	-0.1319500E-02
0.3873613E-02	0.3699853E-02	0.6836809E-02	-0.	0.6851525E-02	0.7418010E-02	0.5436874E-02
0.1223600E-02	-0.2370681E-02	-0.5498447E-02	-0.7204225E-02	-0.8110649E-02	-0.8771587E-02	-0.2669360E-02
-0.1409221E-02	-0.	-0.1515670E-02	-0.1513452E-02	-0.2873443E-02	-0.4856151E-02	-0.4981312E-02
-0.3569336E-02	-0.3606413E-03	0.2679511E-02	0.3936890E-02	0.2051512E-02	0.6434056E-02	-0.
0.6552668E-02	0.8656846E-02	0.8092181E-02	0.4223351E-02	0.1756560E-05	-0.4407825E-02	-0.7633447E-02
-0.9887010E-02	-0.1163748E-01	0.8086177E-03	0.8423805E-03	-0.	0.8668652E-03	0.4469037E-03
-0.3912488E-03	-0.1293090E-02	-0.1912842E-03	0.1857158E-02	0.4653476E-02	0.6012180E-02	0.4703467E-02
0.2545042E-01	0.1916104E-01	0.1392400E-01	0.8875990E-02	0.5002520E-02	0.3523374E-02	0.1159754E-02
-0.6115109E-03	-0.1945013E-02	-0.2494427E-02	-0.2634946E-02	-0.2877026E-02	-0.2864319E-02	-0.2842104E-02
-0.2504335E-02	-0.2316917E-02	-0.2523592E-02	-0.1844867E-02	-0.1521747E-02	-0.1533752E-02	-0.1111895E-02
-0.7472836E-03	-0.3746437E-03	-0.	-0.4970166E-03	-0.8696740E-04	0.1747243E-03	0.6213404E-03
-0.3773365E-02	-0.	-0.5396961E-04	0.1405551E-02	-0.	-0.	-0.
-0.	-0.2226095E-02	-0.3447784E-02	-0.2469763E-02	-0.3184345E-02	-0.	-0.3631481E-02
-0.3868417E-02	-0.3317817E-02	-0.1800568E-02	0.6008513E-03	0.3098189E-02	0.4228689E-02	0.3810748E-02
0.1588068E-02	-0.1173062E-03	0.8247936E-01	-0.6054978E-03	0.2617294E-12	-0.2450979E-02	-0.5712010E-01
-0.8532519E-01	-0.9503386E-01	-0.6621448E-01	0.3005938E-01	0.1598159E-00	0.1715825E-00	-0.1145738E-01
0.1181198E-00	0.8669407E-01	0.2056853E-12	0.8496252E-01	0.4798053E-01	-0.4197211E-02	-0.7025645E-01
-0.1106572E-00	-0.6718395E-01	0.4822096E-01	0.8837895E-01	-0.4549563E-01	0.8342426E-01	-0.4537694E-02
0.3053434E-13	-0.6450953E-02	-0.6387104E-01	-0.9321574E-01	-0.9975511E-01	-0.6802868E-01	0.3042181E-01
0.1611279E-00	0.1729948E-00	-0.9468345E-02	0.1205917E-00	0.9529516E-01	-0.4722309E-14	0.9354247E-01
0.5843566E-01	0.4085939E-02	-0.6692364E-01	-0.1124881E-00	-0.7243337E-01	0.4241436E-01	0.8507691E-01
-0.4481015E-01	0.1402768E-00	0.1665571E-00	0.3304002E-13	0.1650810E-00	0.1516181E-00	0.7862373E-01
-0.4067836E-01	-0.1462612E-00	-0.1629806E-00	-0.7934980E-01	-0.9285718E-02	-0.5360664E-01	0.1368838E-00
0.1586783E-00	0.6037360E-14	0.1573059E-00	0.1408143E-00	0.6886002E-01	-0.4594292E-01	-0.1474734E-00
-0.1612973E-00	-0.7455190E-01	-0.1725086E-02	-0.4878870E-01	0.1422003E-00	0.1641378E-00	0.5600756E-13
0.1527020E-00	0.1455106E-00	0.7092960E-01	-0.4669835E-01	-0.1490864E-00	-0.1623256E-00	-0.7697800E-01
-0.7154184E-02	-0.5283257E-01	0.1409724E-00	0.1604884E-00	-0.3014756E-14	0.1591792E-00	0.1416222E-00
0.7341431E-01	-0.4195560E-01	-0.1405326E-00	-0.1521998E-00	-0.6524087E-01	0.5903665E-02	-0.4338709E-01
0.3265940E-02	0.3071688E-02	0.2886173E-02	0.2886173E-02	0.5030144E-02	0.3000435E-02	0.2073953E-03
0.2573984E-03	-0.4953616E-02	-0.4621716E-02	-0.1155163E-02	-0.1086052E-02	-0.4898255E-02	-0.4469170E-02
0.7364290E-02	0.1118959E-01	-0.7283797E-02	-0.1282318E-01	0.6036332E-02	0.8974886E-02	-0.8206169E-02
-0.1355487E-01	-0.6194733E-04	0.6437440E-06	-0.1223758E-04	0.9636040E-03	-0.3299947E-03	-0.8456494E-01
0.4104796E-01	-0.1759109E-02	-0.2520207E-02	-0.1416139E-03	0.1403015E-01	-0.8868251E-01	0.5877644E-01
-0.1722651E-02	-0.2029364E-02	-0.1865500E-03	-0.8288899E-03	-0.9214847E-01	0.4347202E-01	-0.1755950E-02
-0.2506742E-02	-0.1538131E-03	0.1584162E-01	-0.8667922E-01	0.6598962E-01	-0.1717949E-02	-0.1990616E-02
-0.1555597E-03	0.4408726E-01	0.5600453E-01	0.3452964E-02	-0.4361286E-04	-0.5860813E-03	0.5976423E-02
0.2058719E-01	0.4677699E-01	0.1286218E-02	-0.4117381E-03	-0.3818193E-03	0.5616760E-02	0.3839123E-01
0.5932249E-01	0.2069194E-02	0.1821960E-04	-0.5763318E-03	0.6155144E-02	0.2000761E-01	0.5455029E-01
0.1901404E-02	-0.3553278E-03	-0.3850386E-03	0.5677164E-02	0.1104508E-02	0.6429801E-03	0.2521773E-03
-0.1506794E-03	-0.6138056E-03	-0.3265539E-02	-0.3736810E-02	-0.3743483E-02	-0.3315701E-02	-0.2569280E-02
0.3552698E-02						

SA-8 RUN #3 MODE 21 XN = 1385571

0.2131157E-01	0.1676462E-01	0.1303045E-01	0.9415619E-02	0.6540151E-02	0.5530658E-02	0.3776790E-02
0.2463802E-02	0.1542302E-02	0.1130486E-02	0.8577525E-03	0.6298159E-03	0.4737202E-03	0.2209689E-03
0.1085812E-03	-0.6411955E-04	-0.1337020E-03	-0.1969846E-03	-0.2238101E-03	-0.2254621E-03	-0.2484239E-03
-0.2581065E-03	-0.3215877E-03	-0.	-0.3042100E-03	-0.3161053E-03	-0.3520362E-03	-0.3989643E-03
-0.	-0.	0.1578507E-06	-0.3717565E-03	-0.	-0.	-0.
-0.	0.9805555E-04	0.6811183E-03	-0.3297399E-03	-0.5891740E-03	-0.	-0.8348803E-03
-0.1160845E-02	-0.1721449E-02	-0.2149263E-02	-0.2369736E-02	-0.2135210E-02	-0.1438689E-02	-0.5095257E-03
0.4856034E-03	0.1445222E-02	-0.1681910E-03	-0.1192809E-02	-0.	-0.1112464E-02	-0.1357889E-02
-0.8994304E-03	-0.4589133E-03	0.3684563E-03	0.6797549E-03	0.1060593E-02	0.1471949E-02	0.1711253E-02
-0.2641215E-02	-0.7740511E-03	-0.	-0.7991783E-03	0.4516822E-03	0.1059886E-02	0.4945657E-03
0.4774181E-04	-0.7865431E-03	-0.9577030E-03	0.7022598E-04	0.2322415E-02	-0.6132559E-03	-0.2281076E-02
-0.	-0.2182917E-02	-0.2688160E-02	-0.1853353E-02	-0.7247551E-03	0.7643610E-03	0.1357855E-02
0.1398371E-02	0.9500088E-03	-0.3814258E-04	0.1704952E-02	0.1458757E-02	-0.	0.1427661E-02
0.1185374E-02	0.7796942E-03	-0.1662977E-03	-0.6563393E-03	-0.1142455E-02	-0.9105980E-03	0.3104277E-03
0.2590504E-02	0.1737672E-02	0.3721806E-02	0.	0.3732390E-02	0.4081512E-02	0.2844348E-02
0.3153789E-03	-0.1650042E-02	-0.3123156E-02	-0.3576827E-02	-0.3534343E-02	-0.3422815E-02	-0.1998895E-02
-0.6145740E-03	0.	-0.6756727E-03	-0.2877037E-03	-0.1034608E-02	-0.2437937E-02	-0.2783874E-02
-0.2186504E-02	-0.3846689E-03	0.1376732E-02	0.2039242E-02	0.1041664E-02	0.3258085E-02	0.
0.3326605E-02	0.4295927E-02	0.3854132E-02	0.1665634E-02	-0.3721543E-03	-0.2306104E-02	-0.3438935E-02
-0.4594590E-02	-0.4634746E-02	0.7153562E-03	-0.2229159E-03	0.	-0.2161334E-03	-0.9596438E-03
-0.1409484E-02	-0.1335660E-02	0.2103498E-03	0.2144690E-02	0.3964221E-02	0.4118694E-02	0.2021669E-02
0.9578091E-02	0.7643545E-02	0.5714249E-02	0.3884713E-02	0.2464283E-02	0.1869349E-02	0.9967149E-03
0.2908071E-03	-0.2824363E-03	-0.5329433E-03	-0.6131890E-03	-0.8086870E-03	-0.8721808E-03	-0.1006891E-02
-0.9237539E-03	-0.9878450E-03	-0.1321886E-02	-0.9567292E-03	-0.8168247E-03	-0.9117787E-03	-0.6962905E-03
-0.5190959E-03	-0.3202321E-03	0.	-0.3620567E-03	-0.1919833E-03	-0.8259620E-04	0.1587045E-03
0.4128591E-03	0.	-0.2723852E-04	0.6873039E-03	0.	0.	0.
0.	0.4381910E-03	-0.2789632E-02	0.9484209E-03	-0.1808386E-04	0.	-0.7468685E-03
-0.1448684E-02	-0.1999663E-02	-0.1751866E-02	-0.7578485E-03	0.7277520E-03	0.1809613E-02	0.2111464E-02
0.1275405E-02	0.5486304E-03	-0.1147821E-00	-0.1771436E-00	0.1587617E-12	-0.1755620E-00	-0.1684803E-00
-0.9787918E-01	-0.2242323E-02	0.8630427E-01	0.1602295E-00	0.1963154E-00	0.1236049E-00	-0.5677514E-01
-0.1017832E-00	-0.1479343E-00	0.1256170E-12	-0.1462599E-00	-0.1326237E-00	-0.6850279E-01	0.7705361E-02
0.7024384E-01	0.1227035E-00	0.1521422E-00	0.9043288E-01	-0.7057903E-01	-0.1133602E-00	-0.1782467E-00
0.1850519E-13	-0.1767069E-00	-0.1712018E-00	-0.1009930E-00	-0.4593004E-02	0.8501349E-01	0.1596937E-00
0.1960275E-00	0.1232843E-00	-0.5677471E-01	-0.1017680E-00	-0.1442217E-00	-0.2746338E-14	-0.1425454E-00
-0.1276096E-00	-0.6444621E-01	0.9264989E-02	0.6925368E-01	0.1201761E-00	0.1496385E-00	0.8947850E-01
-0.6244818E-01	-0.5693157E-01	-0.3011423E-02	0.2001235E-13	-0.2951528E-04	0.6275425E-01	0.9641659E-01
0.7550750E-01	0.1881220E-01	-0.2507242E-01	-0.3034029E-01	-0.3999324E-01	-0.9062696E-01	-0.6094438E-01
-0.1290229E-01	0.3687091E-14	-0.9989893E-02	0.4816110E-01	0.8207011E-01	0.6622740E-01	0.1566560E-01
-0.2309621E-01	-0.2455653E-01	-0.3249567E-01	-0.8636097E-01	-0.5435072E-01	-0.2806681E-02	0.3406641E-13
0.2047428E-03	0.6078069E-01	0.9319317E-01	0.7271311E-01	0.1717178E-01	-0.2530825E-01	-0.3003500E-01
-0.4002650E-01	-0.9143348E-01	-0.5765381E-01	-0.1077256E-01	-0.1927814E-14	-0.7870104E-02	0.4917498E-01
0.8269295E-01	0.6750921E-01	0.1822202E-01	-0.1927285E-01	-0.2028334E-01	-0.2881220E-01	-0.8376603E-01
0.1317735E-02	0.1223290E-02	0.1132679E-02	0.1132679E-02	0.4143631E-02	0.2993421E-02	0.8530477E-04
0.1183042E-03	-0.4419313E-02	-0.4144338E-02	-0.2482691E-03	-0.2180448E-03	-0.4148871E-02	-0.3808872E-02
0.2570107E-02	0.4023769E-02	-0.3593911E-02	-0.6168311E-02	0.2126998E-02	0.2974669E-02	-0.3610286E-02
-0.6101957E-02	0.2349807E-03	0.7141256E-06	-0.5282446E-05	-0.9108655E-03	0.1255627E-01	0.9220848E-01
-0.1913772E-00	-0.2972082E-02	-0.3831075E-02	-0.8811815E-03	0.1690720E-01	0.9007912E-01	-0.1853980E-00
-0.2957508E-02	-0.3634385E-02	-0.8713896E-03	0.1242378E-01	0.8814996E-01	-0.1918208E-00	-0.2971222E-02
-0.3828755E-02	-0.8887181E-03	0.1761308E-01	0.8935282E-01	-0.1813915E-00	-0.2957327E-02	-0.3615018E-02
-0.8585257E-03	0.2050849E-02	-0.9422318E-01	-0.4464403E-03	0.1110683E-03	-0.4168821E-04	-0.3493216E-02
-0.8007162E-02	-0.9933068E-01	-0.1329394E-02	-0.2155694E-04	0.3201465E-04	-0.3664019E-02	-0.9461513E-03
-0.9380022E-01	-0.1076692E-02	0.1409786E-03	-0.3846326E-04	-0.3392159E-02	-0.9621207E-02	-0.9515592E-01
-0.1099083E-02	0.4637797E-05	0.3466700E-04	-0.3623167E-02	0.2858086E-03	0.1482579E-03	0.3163959E-04
-0.9717394E-04	-0.2337863E-03	-0.9036117E-03	-0.9411895E-03	-0.9760601E-03	-0.9807821E-03	-0.9797097E-03
0.1470067E-02						

APPENDIX B

Generalized Masses

The generalized masses for each run were calculated and are tabulated on pages B-3 thru B-21.

To illustrate how the generalized masses can be used to determine the independence of modes within a given run the SA-5 run #1 will be used as being typical. The results of using the criteria set up on page 31 for mode 3 of SA-5 run #1 are shown below for several modes.

Mode Run #1	$\frac{M_{33}M_{ii} - M^2_{3i}}{M_{33}M_{ii}} - 1$
4	.0131
5	.0000002
7	.0000008
8	.0000005
10	.00006
11	.0000009
12	.000001

From the above it can be seen that mode 3 run #1 is orthogonal to all the other modes but the degree of orthogonality to mode 4 is much less than to the others. This is probably due to the early convergence of mode 4. As indicated in table 3 the same mode for run #2 seems to be better converged. It seems reasonable to assume that if the off diagonal terms in the generalized mass matrix are an order of magnitude smaller or less than the diagonal terms the two modes are independent. Therefore the criteria chosen on page 31 are too stringent for the Saturn vehicle.

It should be noted that due to the manner in which the eigenvectors were programmed it was necessary to use zero eigenvalues. The eigenvectors associated with these are not necessarily orthogonal to any others.

I = 1 GENERALIZED MASS SA-5 RUN #1

0.16205942E 05	-0.20477928E 02	-0.59981904E 01	-0.14301284E 03	0.84501339E 02	0.84582343E 02	0.16526596E 02
-0.55035444E 01	-0.53791115E 02	-0.47138245E 02	0.78796370E 01	0.46979170E 01	0.98537505E 02	0.10686291E 03
0.25410955E 02	0.26656005E 02	-0.53268044E 01	0.17059138E 03	0.14501333E 03	0.15579016E 03	0.15721428E 03
0.17367976E 03	-0.66918734E-01	-0.66918734E-01	-0.66918734E-01	-0.66918734E-01		

I = 2

-0.20477927E 02	0.15277122E 05	0.79066873E-01	-0.12055151E 02	-0.81878040E 02	-0.75436345E 02	-0.18703089E 02
-0.49089790E 02	-0.98517999E 02	-0.61225145E 02	-0.30843522E 01	0.26500663E 02	0.55983499E 02	0.50798023E 02
0.70423342E 02	0.65201601E 02	0.15636682E 02	-0.22951849E 02	0.21977580E 03	0.20645026E 03	0.12614887E 03
0.10109140E 03	-0.12345322E 04	-0.12345322E 04	-0.12345322E 04	-0.12345322E 04		

I = 3

-0.59981912E 01	0.79067294E-01	0.83127547E 04	0.87215378E 03	0.29510588E 01	-0.10707039E 03	-0.57468864E 01
0.39823868E 01	-0.25519002E 02	-0.74113308E 02	0.93921009E 01	-0.11511477E 01	-0.11609968E 02	-0.23517985E 01
-0.22178625E 01	0.43613232E 02	0.42378287E 01	0.11237389E-00	0.36304245E 01	-0.25075707E 01	-0.67005242E 00
-0.92143748E 01	0.11627404E 02	0.11627404E 02	0.11627404E 02	0.11627404E 02		

I = 4

-0.14301284E 03	-0.12055150E 02	0.87215374E 03	0.69877145E 04	-0.81857172E 02	-0.36301255E 02	0.40447789E 03
0.36898971E 03	-0.49050256E-00	-0.12367710E 03	0.21566068E 03	0.12408170E 03	-0.64739715E 02	-0.13288194E 03
-0.40005848E 02	-0.41507577E 02	0.69760638E 02	0.90371683E 01	-0.34086598E 02	-0.14867861E 02	0.34078656E 01
-0.16588876E 02	0.48730279E 03	0.48730279E 03	0.48730279E 03	0.48730279E 03		

I = 5

0.84501339E 02	-0.81878039E 02	0.29510625E 01	-0.81857174E 02	0.67246491E 04	0.65559142E 04	0.99701939E 01
0.18803877E 04	0.72682892E 02	-0.26356671E 02	0.20550338E 02	0.48543327E 01	-0.33890372E 01	-0.27336235E 01
-0.36958509E 02	-0.25189275E 02	0.11936519E 01	0.24546760E 02	-0.12059746E 03	-0.96443412E 02	-0.81897189E 02
-0.64285436E 02	0.18561742E 04	0.18561742E 04	0.18561742E 04	0.18561742E 04		

I = 6

0.84582343E 02	-0.75436345E 02	-0.10707039E 03	-0.36301260E 02	0.65559142E 04	0.64986719E 04	0.71137683E 03
0.18486638E 04	0.60221218E 02	-0.15188399E 02	0.64038970E 02	0.11575522E 03	-0.50472160E 02	-0.11400707E 03
-0.46702661E 02	-0.42355586E 02	0.93313036E 01	0.88243055E 01	-0.14388292E 03	-0.133149[illegible]0E 03	-0.83004901E 02
-0.63296819E 02	0.18449245E 04	0.18449245E 04	0.18449245E 04	0.18449245E 04		

I = 7

0.16526603E 02	-0.18703090E 02	-0.57468845E 01	0.40447789E 03	0.99701933E 01	0.71137683E 03	0.54501168E 04
0.31307562E 03	0.95229779E 02	-0.78633383E 03	0.67471223E 02	0.83364369E 01	0.45556944E 02	0.11111490E 02
0.24863294E 01	-0.43180373E 02	-0.74964619E 01	0.87840207E 01	-0.80387993E 00	0.79393400E 01	-0.13649760E 02
-0.58753685E 01	0.28151522E 03	0.28151522E 03	0.28151522E 03	0.28151522E 03		

I = 8

-0.55035462E 01	-0.49089774E 02	0.39823873E 01	0.36898971E 03	0.18803877E 04	0.18486638E 04	0.31307562E 03
0.40554114E 04	0.34789187E 04	0.43432801E 03	-0.51391558E 02	0.15854991E 04	0.28930136E 04	0.24255595E 04
0.55243094E 03	0.58955817E 03	0.11290026E 03	-0.10589880E 03	0.35277321E 03	0.35403603E 03	0.13383566E 03
0.18661436E 03	0.25293694E 04	0.25293694E 04	0.25293694E 04	0.25293694E 04		

I = 9

-0.53791118E 02	-0.98518009E 02	-0.25519002E 02	-0.49049871E-00	0.72682912E 02	0.60221209E 02	0.95229779E 02
0.34789187E 04	0.50632218E 04	0.55787102E 03	-0.13886150E 03	-0.49286792E 02	0.84556612E 01	0.31077224E 02
-0.43335406E 02	-0.37462118E 02	-0.46895827E 02	0.15339226E 02	-0.20723022E 03	-0.19596546E 03	-0.11723444E 03
-0.77608995E 02	0.27163713E 04	0.27163713E 04	0.27163713E 04	0.27163713E 04		

I = 10

-0.47138245E 02	-0.61225145E 02	-0.74113309E 02	-0.12367710E 03	-0.26356663E 02	-0.15188391E 02	-0.78633383E 03
0.43432801E 03	0.55787103E 03	0.10836445E 05	-0.40163732E 04	0.57697361E 02	0.11630355E 03	0.15065435E 03
0.63088365E 02	0.93026183E 02	-0.15691133E 02	-0.26197118E 02	0.24628033E 03	0.11513596E 03	-0.27924630E 02
-0.10018649E 03	0.22359040E 03	0.22359040E 03	0.22359040E 03	0.22359040E 03		

I = 11

0.78796371E 01	-0.30843525E 01	0.93921006E 01	0.21566067E 03	0.20550314E 02	0.64038970E 02	0.67471223E 02
-0.51391562E 02	-0.13886151E 03	-0.40163732E 04	0.11138199E 05	0.15670251E 02	0.53787267E 02	-0.68154C98E 00
0.13164196E 01	-0.78359595E 02	0.76920651E 01	0.11511381E 02	0.20302919E 01	0.25397357E 02	0.10256075E 01
0.13667559E 02	-0.43049505E 02	-0.43049505E 02	-0.43049505E 02	-0.43049505E 02		

I = 12

0.46979202E 01	0.26500665E 02	-0.11511535E 01	0.12408170E 03	0.48543324E 01	0.11575522E 03	0.83364571E 01
0.15854992E 04	-0.49286783E 02	0.57697382E 02	0.15670251E 02	0.77870033E 04	0.34493705E 04	0.78310844E 01
0.12889550E 01	-0.12397149E 03	0.25442798E 01	0.18669975E-00	-0.29923601E 02	-0.26765539E 01	0.81650254E 01
0.53445018E 02	0.42907456E 03	0.42907456E 03	0.42907456E 03	0.42907456E 03		

I = 13

0.98537504E 02	0.55983499E 02	-0.11609966E 02	-0.64739713E 02	-0.33890396E 01	-0.50472173E 02	0.45556944E 02
0.28930136E 04	0.84556747E 01	0.11630355E 03	0.53787270E 02	0.34493705E 04	0.81756224E 04	0.73663872E 04
0.58096096E 02	0.99363156E 02	-0.13774906E 03	-0.80405483E 01	0.54512311E 01	-0.74067247E 01	0.16663203E 02
0.47866457E 02	0.64603806E 03	0.64603806E 03	0.64603806E 03	0.64603806E 03		

I = 14

0.10686291E 03	0.50798018E 02	-0.23517997E 01	-0.13288194E 03	-0.27336276E 01	-0.11400706E 03	0.11111486E 02
0.24255595E 04	0.31077210E 02	0.15065435E 03	-0.68156689E 00	0.78310578E 01	0.73663872E 04	0.81607697E 04
0.53735930E 01	0.14298284E 03	0.57290949E 01	-0.26310520E 01	0.23979391E 02	0.54355896E 01	0.22122723E 02
0.30710241E 02	0.50762659E 03	0.50762659E 03	0.50762659E 03	0.50762659E 03		

I = 15

0.25410955E 02	0.70423342E 02	-0.22178625E 01	-0.40005846E 02	-0.36958501E 02	-0.46702661E 02	0.24863284E 01
0.55243094E 03	-0.43335406E 02	0.63088366E 02	0.13164189E 01	0.12889553E 01	0.58096085E 02	0.53736C09E 01
0.68080320E 04	0.67019130E 04	0.59046546E 01	-0.88635172E 01	0.98075677E 02	0.86570226E 02	0.69722583E 02
0.73594681E 02	-0.12792058E 04	-0.12792058E 04	-0.12792058E 04	-0.12792058E 04		

I = 16

0.26656007E 02	0.65201597E 02	0.43613231E 02	-0.41507577E 02	-0.25189275E 02	-0.42355586E 02	-0.43180375E 02
0.58955816E 03	-0.37462116E 02	0.93026183E 02	-0.78359595E 02	-0.12397149E 03	0.99363158E 02	0.14298284E 03
0.67019130E 04	0.68503331E 04	0.12581716E 04	-0.71127150E 01	0.96729036E 02	0.72254331E 02	0.52459944E 02
0.80288547E 02	-0.13325235E 04	-0.13325235E 04	-0.13325235E 04	-0.13325235E 04		

I = 17

-0.53268015E 01	0.15636683E 02	0.42378282E 01	0.69760646E 02	0.11936519E 01	0.93313035E 01	-0.74964552E 01
0.11290026E 03	-0.46895826E 02	-0.15691138E 02	0.76920687E 01	0.25442918E 01	-0.13774907E 03	0.57290872E 01
0.59046540E 01	0.12581716E 04	0.65002553E 04	-0.64005311E 01	0.38749215E 01	0.31697176E 02	0.16711470E 02
0.48897582E 02	-0.38993817E 03	-0.38993817E 03	-0.38993817E 03	-0.38993817E 03		

I = 18

0.17059138E 03	-0.22951845E 02	0.11237407E-00	0.90371685E 01	0.24546760E 02	0.98243045E 01	0.87340212E 01
-0.10589880E 03	0.15339231E 02	-0.26197118E 02	0.11511381E 02	0.18669979E-00	-0.80405509E 01	-0.26310521E 01
-0.88635211E 01	-0.71127136E 01	-0.64005285E 01	0.20745540E 04	-0.37039708E 02	-0.31814250E 02	-0.21468759E 02
-0.19542032E 02	0.88560266E 02	0.88560266E 02	0.88560266E 02	0.88560266E 02		

I = 19

0.14501333E 03	0.21977580E 03	0.36304260E 01	-0.34086594E 02	-0.12059745E 03	-0.14388292E 03	-0.80387998E 00
0.35277320E 03	-0.20723024E 03	0.24628033E 03	0.20302879E 01	-0.29923598E 02	0.54511877E 01	0.23979422E 02
0.98075683E 02	0.96729040E 02	0.38749220E 01	-0.37039708E 02	0.12997816E 05	0.12728561E 05	0.31287453E 03
0.36829160E 03	-0.27762006E 04	-0.27762006E 04	-0.27762006E 04	-0.27762006E 04		

I = 20

0.15579016E 03	0.20645026E 03	-0.25075697E 01	-0.14867859E 02	-0.96443412E 02	-0.13314836E 03	0.79393373E 01
0.35403603E 03	-0.19596547E 03	0.11513596E 03	0.25397360E 02	-0.26765461E 01	-0.74066906E 01	0.54356044E 01
0.86570227E 02	0.72254317E 02	0.31697190E 02	-0.31814248E 02	0.12728561E 05	0.13018091E 05	0.23643190E 03
0.47932041E 03	-0.27586938E 04	-0.27586938E 04	-0.27586938E 04	-0.27586938E 04		

I = 21

0.15721428E 03	0.12614887E 03	-0.67005243E 00	0.34078643E 01	-0.81897181E 02	-0.83004906E 02	-0.13649762E 02
0.13383565E 03	-0.11723443E 03	-0.27924629E 02	0.10256058E 01	0.81650282E 01	0.16663194E 02	0.22122717E 02
0.69722579E 02	0.52459944E 02	0.16711472E 02	-0.21468759E 02	0.31287456E 03	0.23643189E 03	0.70180888E 04
0.70962592E 04	0.37029185E 04	0.37029185E 04	0.37029185E 04	0.37029185E 04		

I = 22

0.17367976E 03	0.10109140E 03	-0.92143767E 01	-0.16588874E 02	-0.64285436E 02	-0.63296819E 02	-0.58753723E 01
0.18661436E 03	-0.77609004E 02	-0.10018650E 03	0.13667558E 02	0.53445018E 02	0.47866449E 02	0.30710252E 02
0.73594681E 02	0.80288544E 02	0.48897576E 02	-0.19542032E 02	0.36829160E 03	0.47932041E 03	0.70962592E 04
0.73627633E 04	0.37959825E 04	0.37959825E 04	0.37959825E 04	0.37959825E 04		

I = 23

-0.66918734E-01	-0.12345322E 04	0.11627404E 02	0.48730279E 03	0.18561742E 04	0.18449245E 04	0.28151522E 03
0.25293694E 04	0.27163713E 04	0.22359040E 03	-0.43049505E 02	0.42907456E 03	0.64603806E 03	0.50762659E 03
-0.12792058E 04	-0.13325235E 04	-0.38993817E 03	0.88560266E 02	-0.27762006E 04	-0.27586938E 04	0.37029185E 04
0.37959825E 04	0.34682000E 05	0.34682000E 05	0.34682000E 05	0.34682000E 05		

I = 24

-0.66918734E-01	-0.12345322E 04	0.11627404E 02	0.48730279E 03	0.18561742E 04	0.18449245E 04	0.28151522E 03
0.25293694E 04	0.27163713E 04	0.22359040E 03	-0.43049505E 02	0.42907456E 03	0.64603806E 03	0.50762659E 03
-0.12792058E 04	-0.13325235E 04	-0.38993817E 03	0.88560266E 02	-0.27762006E 04	-0.27586938E 04	0.37029185E 04
0.37959825E 04	0.34682000E 05	0.34682000E 05	0.34682000E 05	0.34682000E 05		

I = 25

-0.66918734E-01	-0.12345322E 04	0.11627404E 02	0.48730279E 03	0.18561742E 04	0.18449245E 04	0.28151522E 03
0.25293694E 04	0.27163713E 04	0.22359040E 03	-0.43049505E 02	0.42907456E 03	0.64603806E 03	0.50762659E 03
-0.12792058E 04	-0.13325235E 04	-0.38993817E 03	0.88560266E 02	-0.27762006E 04	-0.27586938E 04	0.37029185E 04
0.37959825E 04	0.34682000E 05	0.34682000E 05	0.34682000E 05	0.34682000E 05		

I = 26

-0.66918734E-01	-0.12345322E 04	0.11627404E 02	0.48730279E 03	0.18561742E 04	0.18449245E 04	0.28151522E 03
0.25293694E 04	0.27163713E 04	0.22359040E 03	-0.43049505E 02	0.42907456E 03	0.64603806E 03	0.50762659E 03
-0.12792058E 04	-0.13325235E 04	-0.38993817E 03	0.88560266E 02	-0.27762006E 04	-0.27586938E 04	0.37029185E 04
0.37959825E 04	0.34682000E 05	0.34682000E 05	0.34682000E 05	0.34682000E 05		

I = 1 GENERALIZED MASS SA-5 RUN #2

0.15569343E 05	0.49408409E 03	-0.32306118E 01	-0.22287364E-00	0.34232169E 01	-0.40424382E 02	0.12959402E 02
-0.19684910E 01	-0.77925944E 01	0.37792429E 01	-0.25092584E 02	-0.27959891E 02	0.17487597E 02	-0.29470894E 01
0.17749221E 02	0.76646360E 01	-0.65182885E 00	-0.53783266E 02	-0.33095010E 02	-0.19991256E 02	0.69499733E 01
0.22589288E 02	0.25332148E 02	0.11745698E 04				

I = 2

0.49408410E 03	0.15304677E 05	-0.19314194E 02	0.28264826E 01	0.10221989E 02	-0.92631832E 02	0.29702865E 02
-0.88812090E 02	-0.93973954E 02	0.45027803E 01	-0.10100001E 02	-0.56184401E 01	0.15337483E 02	0.51225571E 02
0.28838256E 02	0.11760913E 02	0.12635829E 03	0.16878407E 03	0.22248086E 03	0.25997996E 02	0.89200810E 02
-0.75999632E 02	0.23988978E 03	-0.72184131E-01				

I = 3

-0.32306146E 01	-0.19314194E 02	0.66265965E 04	0.68795414E 04	0.86596812E 01	0.65059615E 02	0.16796982E 02
0.25612143E 02	0.24248664E 02	-0.30251572E 02	-0.21436011E 01	-0.21869914E-00	-0.72258025E 01	-0.10898390E 02
-0.40775041E 01	-0.10763949E-00	-0.26547716E 02	0.15499891E 02	-0.15996901E 02	0.16532832E 02	-0.26785283E 02
-0.16593070E 02	-0.50530178E 02	-0.19418287E 04				

I = 4

-0.22287239E-00	0.28264830E 01	0.68795414E 04	0.72207041E 04	0.94369817E 02	-0.46570741E 02	0.33038139E 03
0.67924454E 02	0.70523315E 02	0.10863503E 03	-0.14945123E 03	0.48452795E 02	-0.30509640E 03	0.62056633E 02
0.23260771E 02	0.16704063E 03	-0.75285549E 01	0.38493227E 02	0.71699110E 02	-0.28463043E 02	0.32618275E 02
-0.48978603E 02	0.29647222E 03	-0.20260468E 04				

I = 5

0.34232173E 01	0.10221987E 02	0.86596816E 01	0.94369817E 02	0.41792563E 04	0.34605569E 04	0.60783575E 03
0.22232029E 03	0.24443617E 03	0.29058408E 03	-0.27033206E 03	0.88136375E 02	-0.55219741E 03	0.11021663E 03
0.39970402E 02	0.26760203E 03	0.35233784E 02	0.43277851E 02	0.15275969E 03	-0.76414578E 02	0.10907772E 03
-0.41760287E 02	0.55517358E 03	0.21321301E 04				

I = 6

-0.40424382E 02	-0.92631831E 02	0.65059630E 02	-0.46570741E 02	0.34605569E 04	0.50887417E 04	-0.12856507E 04
0.47033801E 02	0.22638445E 03	-0.24087171E 03	0.74075493E 02	0.33562608E 02	-0.10428846E 03	-0.30746140E 03
-0.26801853E 03	-0.53086922E 02	-0.70599356E 03	0.82286670E 03	0.39577138E 03	0.47118148E 03	-0.16074656E 03
-0.35319958E 03	-0.18386104E 04	0.20315651E 04				

I = 7

0.12959400E 02	0.29702862E 02	0.16796993E 02	0.33038139E 03	0.60783573E 03	-0.12856507E 04	0.55806247E 04
0.39326278E 04	0.39001724E 04	0.16291726E 04	-0.10347698E 04	0.31907796E 03	-0.21138440E 04	0.39651114E 03
0.14087181E 03	0.94402485E 03	0.37371841E 02	0.17615679E 03	0.49156498E 03	-0.22822382E 03	0.31408603E 03
-0.18513289E 03	0.18147957E 04	-0.37700243E 03				

I = 8

-0.19684943E 01	-0.88812094E 02	0.25612143E 02	0.67924456E 02	0.22232029E 03	0.47033804E 02	0.39326278E 04
0.52513681E 04	0.50967914E 04	0.48539930E 01	-0.62627405E 01	-0.52487677E 01	-0.16343496E 02	-0.90502857E 02
-0.31493501E 02	-0.76307621E 00	-0.17201725E 01	-0.34026795E 01	-0.62047672E 01	-0.20347320E 02	-0.11617891E 02
0.96212068E 01	0.83337320E 01	-0.31912520E 03				

I = 9

-0.77925963E 01	-0.93973947E 02	0.24248661E 02	0.70523313E 02	0.24443618E 03	0.22638445E 03	0.39001724E 04
0.50967914E 04	0.53598873E 04	0.20084976E 04	0.50631927E 02	-0.10345270E 02	0.55778119E 02	-0.70891102E 02
-0.38989640E 02	-0.91427888E 01	-0.11160874E 03	0.14414317E 03	0.80472413E 02	0.55293763E 02	-0.14999138E 02
-0.60542659E 02	-0.28063610E 03	-0.30158332E 03				

I = 10

0.37792423E 01	0.45027811E 01	-0.30251572E 02	0.10863502E 03	0.29058409E 03	-0.24087171E 03	0.16291726E 04
0.48540190E 01	0.20084976E 04	0.11010557E 05	0.51621532E 01	-0.28157985E 02	0.30900946E 02	0.14993422E 03
0.83568779E 02	0.80512626E 01	0.35959999E 02	-0.66347337E 02	-0.10416245E 03	-0.10230082E 02	0.70294475E 01
0.33101087E 02	0.15585284E 03	-0.67125873E 02				

I = 11

-0.25092588E 02	-0.10100006E 02	-0.21435878E 01	-0.14945123E 03	-0.27033208E 03	0.74075478E 02	-0.10347698E 04
-0.62627597E 01	0.50631929E 02	0.51621570E 01	0.77738447E 04	0.64308178E 04	-0.56544866E 01	0.12458526E 02
0.62689917E 01	0.21032068E 01	0.78114098E 02	0.12999620E 02	-0.36526989E 02	0.25566707E 02	-0.44287036E 02
-0.38026221E 02	-0.15807737E 02	0.64341943E 03				

I = 12

-0.27959898E 02	-0.56184386E 01	-0.21867900E-00	0.48452795E 02	0.88136375E 02	0.33562604E 02	0.31907797E 03
-0.52487706E 01	-0.10345266E 02	-0.28158000E 02	0.64308179E 04	0.73531158E 04	-0.40648787E 04	0.60993609E 02
0.17172868E 02	0.98345205E 02	-0.87789125E 02	0.35656868E 02	0.14913848E 02	0.85193595E 01	-0.20790368E 02
-0.44527662E 02	0.65537582E 02	0.69665928E 03				

I = 13

0.17487601E 02	0.15337475E 02	-0.72258027E 01	-0.30509640E 03	-0.55219741E 03	-0.10428846E 03	-0.21138441E 04
-0.15343504E 02	0.55778124E 02	0.30900949E 02	-0.56544942E 01	-0.40648787E 04	0.81575222E 04	0.33152118E 02
0.14783032E 02	0.25826886E 01	0.30441377E 03	-0.13788709E 02	0.71423312E 01	-0.14607717E 02	0.27690476E 02
-0.94976205E 01	0.17056222E 03	-0.33205346E 03				

I = 14

-0.29470862E 01	0.51225574E 02	-0.10898388E 02	0.62056638E 02	0.11021663E 03	-0.30746140E 03	0.39651114E 03
-0.90502858E 02	-0.70891102E 02	0.14993422E 03	0.12458533E 02	0.60993605E 02	0.33152110E 02	0.68306148E 04
0.16432592E 03	0.11979479E 02	-0.13334960E 03	-0.30006784E 02	-0.14995926E 03	0.53954196E 02	0.18582483E 01
0.53809325E 02	-0.14689910E 01	-0.34180245E 03				

I = 15

0.17749216E 02	0.28838259E 02	-0.40775106E 01	0.23260766E 02	0.39970402E 02	-0.26801853E 03	0.14087181E 03
-0.31493493E 02	-0.38989642E 02	0.83568776E 02	0.62690066E 01	0.17172876E 02	0.14783037E 02	0.16432592E 03
0.64902077E 04	0.42907638E 01	0.25317054E 02	-0.29703357E 02	-0.32889438E 02	-0.61959627E 01	0.56764025E 02
0.53790863E 02	0.98729826E 02	0.99398676E 03				

I = 16

0.76646360E 01	0.11760913E 02	-0.10763851E-00	0.16704064E 03	0.26760202E 03	-0.53086929E 02	0.94402484E 03
-0.75307689E 00	-0.91427874E 01	0.80512628E 01	0.21032069E 01	0.98345205E 02	0.25826894E 01	0.11979477E 02
0.42907633E 01	0.20835540E 04	-0.18937299E 04	0.20208570E 01	0.10242566E 02	-0.76976155E 01	0.16046043E 02
-0.56507099E 02	-0.29299192E 03	0.26153708E 02				

I = 17

-0.65182884E 00	0.12635829E 03	-0.26547720E 02	-0.75285587E 01	0.35233790E 02	-0.70599356E 03	0.37371840E 02
-0.17201729E 01	-0.11160874E 03	0.35960000E 02	0.78114098E 02	-0.87789135E 02	0.30441377E 03	-0.13334959E 03
0.25317051E 02	-0.18937299E 04	0.31237695E 04	0.21169847E 04	0.23297861E 04	-0.11774337E 03	0.37919193E 03
-0.29271048E 03	0.23009498E 04	-0.12477507E 03				

I = 18

-0.53783259E 02	0.16878407E 03	0.15499890E 02	0.38493231E 02	0.43277853E 02	0.82286672E 03	0.17615680E 03
-0.34026787E 01	0.14414318E 03	-0.66347337E 02	0.12999576E 02	0.35856871E 02	-0.13788709E 02	-0.30006780E 02
-0.29703360E 02	0.20208500E 01	0.21169847E 04	0.14120530E 05	0.13109936E 05	0.30746775E 03	-0.26103850E 03
-0.43034545E 03	-0.12972880E 04	-0.97057477E 03				

I = 19

-0.33095016E 02	0.22248086E 03	-0.15996904E 02	0.71699112E 02	0.15275969E 03	0.39577138E 03	0.49156498E 03
-0.62047656E 01	0.80472413E 02	-0.10416245E 03	-0.36526993E 02	0.14913864E 02	0.71423294E 01	-0.14995926E 03
-0.32889440E 02	0.10242566E 02	0.23297861E 04	0.13109936E 05	0.12774201E 05	0.82082953E 02	-0.40791449E 02
-0.34895047E 03	-0.42849746E 03	-0.92288813E 03				

I = 20

-0.19991253E 02	0.25997996E 02	0.16532838E 02	-0.28463039E 02	-0.76414570E 02	0.47118149E 03	-0.22822382E 03
-0.20347319E 02	0.86293764E 02	-0.10230080E 02	0.25566699E 02	0.85193583E 01	-0.14607713E 02	0.53954189E 02
-0.61959605E 01	-0.76976153E 01	-0.11774335E 03	0.30746774E 03	0.82082933E 02	0.60331858E 04	0.62815432E 04
-0.59615929E 04	-0.96013698E 03	0.41965200E 04				

I = 21

0.69499732E 01	0.89200812E 02	-0.26785275E 02	0.32618275E 02	0.10907772E 03	-0.16074657E 03	0.31408603E 03
-0.11617888E 02	-0.14999139E 02	0.70294479E 01	-0.44287031E 02	-0.20790359E 02	0.27690478E 02	0.18582445E 01
0.56764042E 02	0.16046041E 02	0.37919193E 03	-0.26103850E 03	-0.40791450E 02	0.62815432E 04	0.71000114E 04
-0.63393404E 04	0.24772056E 03	0.46601874E 04				

I = 22

0.22589285E 02	-0.75999632E 02	-0.16593067E 02	-0.48978607E 02	-0.41760290E 02	-0.35319957E 03	-0.18513289E 03
0.96212039E 01	-0.60542662E 02	0.33101569E 02	-0.38026217E 02	-0.44527669E 02	-0.94976120E 01	0.53809326E 02
0.53790880E 02	-0.56507111E 02	-0.29271048E 03	-0.45034546E 03	-0.34895047E 03	-0.59615929E 04	-0.63393404E 04
0.63741502E 04	0.70867930E 02	-0.42232643E 04				

I = 23

0.25332150E 02	0.23988978E 03	-0.50530178E 02	0.29647222E 03	0.55517358E 03	-0.18386105E 04	0.18147957E 04
0.83337328E 01	-0.28063610E 03	0.15585284E 03	-0.15807743E 02	0.65537566E 02	0.17056222E 03	-0.14689919E 01
0.98729824E 02	-0.29299191E 03	0.23009498E 04	-0.12972880E 04	-0.42849746E 03	-0.96013699E 03	0.24772055E 03
0.70867932E 02	0.52336156E 04	-0.72826683E 03				

I = 24

0.11745698E 04	-0.72184131E-01	-0.19418287E 04	-0.20260468E 04	0.21321301E 04	0.20315651E 04	-0.37700243E 03
-0.31912520E 03	-0.30158332E 03	-0.67125873E 02	0.64341943E 03	0.69665928E 03	-0.33205346E 03	-0.34180245E 03
0.99398676E 03	0.26153708E 02	-0.12477507E 03	-0.97057477E 03	-0.92288813E 03	0.41965200E 04	0.46601874E 04
-0.42232643E 04	-0.72826683E 03	0.34682000E 05				

I = 1 GENERALIZED MASS SA-5 RUN #3

0.16573422E 05	0.11634656E 02	-0.55990303E 01	-0.39350155E 02	-0.42765272E 02	-0.53733131E 02	-0.54885776E 01
-0.14734756E 02	0.32259573E 02	0.32852378E 02	0.61783505E 01	0.25468984E 02	-0.58847988E 02	0.64693857E 02
-0.67287699E 00	0.25313058E 02	-0.23911364E 01	0.78851399E 01	0.10556655E 01	-0.11143310E 01	-0.51230242E 01
0.56113528E 01	-0.25451850E 01	0.55378442E 01				

I = 2

0.11634656E 02	0.14577947E 05	-0.80759465E 02	-0.44459972E 03	-0.49757145E 03	-0.62271028E 03	-0.94925001E 02
-0.22118713E 03	0.25479149E 03	0.26476175E 03	0.51163902E 02	0.29232416E 03	-0.64379878E 03	0.71881881E 03
-0.75523186E 01	0.28269211E 03	-0.26524724E 02	0.93196471E 02	0.22488447E 02	-0.25974049E 01	-0.53359273E 02
0.58529114E 02	-0.21042462E 02	0.58485600E 02				

I = 3

-0.55990259E 01	-0.80759469E 02	0.79869250E 04	0.22101918E 03	0.98497736E 03	0.10130417E 04	0.16731018E 04
0.52249027E 03	0.22214674E 03	0.95660845E 02	0.44470593E 03	0.47129631E 02	-0.64351089E 01	0.16319257E 02
-0.93446087E 00	0.67286093E 01	0.11298466E 01	-0.32053281E 02	0.10799270E 03	0.15683509E 01	0.32169903E 01
0.46487454E-00	0.26601291E 01	-0.18573035E 01				

I = 4

-0.39350151E 02	-0.44459972E 03	0.22101917E 03	0.62869418E 04	0.58788954E 04	0.54940066E 04	-0.13253119E 04
-0.13560718E 03	-0.45237409E 03	-0.28781737E 01	-0.95427747E 02	-0.92262889E 01	-0.10563309E 01	0.21251964E 03
-0.14934223E 01	0.10358755E 03	-0.82433633E 01	0.68509914E 00	-0.13404095E 02	0.60376057E 02	-0.69084151E 00
-0.20321605E 02	0.39792851E 02	-0.12703340E 02				

I = 5

-0.42765267E 02	-0.49757145E 03	0.98497733E 03	0.58788954E 04	0.67447565E 04	0.66234078E 04	0.88095102E 03
0.20498794E 04	-0.26741347E 02	-0.31069575E 03	0.24472407E 03	0.70028090E 03	-0.24215456E 03	0.47940034E 03
-0.14555517E 02	0.21220915E 03	0.12476108E 02	-0.11227810E 03	0.24696240E 02	0.13804457E 03	-0.37832586E 02
-0.95705248E 02	0.18379848E 03	-0.16574881E 03				

I = 6

-0.53733135E 02	-0.62271028E 03	0.10130417E 04	0.54940066E 04	0.66234078E 04	0.70487531E 04	0.12897495E 04
0.32444655E 04	-0.77147784E 02	-0.56489779E 03	0.80709037E 02	-0.71035515E 03	0.40111231E 03	-0.64287283E 03
0.32530765E 01	-0.26628426E 03	0.27980783E 02	0.15181184E 03	0.36511361E 02	-0.27051161E 02	0.17017511E 02
-0.82698458E 02	0.21659067E 02	-0.89771345E 02				

I = 7

-0.54885776E 01	-0.94925003E 02	0.16731018E 04	-0.13253119E 04	0.88095101E 03	0.12897495E 04	0.65603679E 04
0.14949746E 04	0.70498703E 03	0.98695701E 02	0.90478642E 03	0.68673195E 02	-0.16380784E 02	-0.12673023E 03
-0.43287504E 01	-0.63093370E 02	0.13678913E 02	-0.62649605E 02	0.18947922E 03	-0.28743436E 02	0.49447970E 01
0.20538355E 01	-0.38535241E 01	-0.16524353E 02				

I = 8

-0.14734760E 02	-0.22118713E 03	0.52249029E 03	-0.13560718E 03	0.20498794E 04	0.32444655E 04	0.14949746E 04
0.72687735E 04	0.18139356E 04	-0.60211926E 02	0.30501764E 03	-0.38859469E 02	0.35870656E 01	-0.53796019E 03
-0.26580770E 01	-0.26076373E 03	0.20365226E 02	0.32851843E 01	-0.18928162E 02	-0.14923958E 03	-0.56409385E 00
0.49216375E 02	-0.98303312E 02	0.30563553E 02				

I = 9

0.32259573E 02	0.25479149E 03	0.22214674E 03	-0.45237409E 03	-0.26741355E 02	-0.77147788E 02	0.70498703E 03
0.18139356E 04	0.44622123E 04	0.44312112E 04	0.59334895E 03	0.69391464E 03	-0.36503342E 03	0.60204701E 03
-0.62708423E 01	0.24962328E 03	-0.24022978E 02	-0.14723886E 03	0.75923060E-02	0.23781246E 02	-0.13652176E 02
0.75613475E 02	-0.16588975E 02	0.76234144E 02				

I = 10

0.32852379E 02	0.26476175E 03	0.95660848E 02	-0.28781693E 01	-0.31069575E 03	-0.56489779E 03	0.98695694E 02
-0.60211918E 02	0.44312113E 04	0.51070594E 04	0.45492908E 03	0.72585288E 00	-0.30943980E 01	0.25794728E 03
0.84013291E 00	0.12372782E 03	-0.98137117E 01	-0.15907813E 02	0.19541515E 02	0.59575634E 02	-0.14218888E-00
-0.16875683E 02	0.37798540E 02	-0.98787246E 01				

I = 11

0.61783510E 01	0.51163902E 02	0.44470592E 03	-0.95427749E 02	0.24472407E 03	0.80709037E 02	0.90478643E 03
0.30501764E 03	0.99334895E 03	0.45492908E 03	0.10217889E 05	-0.17212068E 03	0.20601840E 02	0.87594507E 02
-0.75580746E 00	0.44520240E 02	-0.12651350E 02	0.52773696E 02	-0.14950815E 03	0.12097342E 02	-0.34134577E 01
0.19156390E 02	-0.85560434E 01	0.29043009E 02				

I = 12

0.25468984E 02	0.29232416E 03	0.47129633E 02	-0.92262877E 01	0.70028090E 03	-0.71035515E 03	0.68673193E 02
-0.38859451E 02	0.69391464E 03	0.72586540E 00	-0.17212071E 03	0.81274130E 04	0.35288578E 01	0.23556738E 04
0.57210118E 00	0.10827108E 04	-0.70993605E 02	-0.21706823E 01	0.92340789E 01	0.38166221E 03	0.52507941E-01
0.17463390E 03	0.23398800E 03	0.83670076E 02				

I = 13

-0.58847991E 02	-0.64379878E 03	-0.64351112E 01	-0.10563342E 01	-0.24215456E 03	0.40111231E 03	-0.16380785E 02
0.35870657E 01	-0.36503343E 03	-0.30944002E 01	0.20601825E 02	0.35288548E 01	0.80610215E 04	-0.75666466E 04
-0.55978048E 00	-0.27678578E 04	0.99783105E 02	0.51770140E 01	-0.19158234E 02	-0.42154525E 03	-0.71421137E 00
-0.11483251E 03	-0.25157604E 03	-0.54534917E 02				

I = 14

0.64693858E 02	0.71881881E 03	0.16319254E 02	0.21251964E 03	0.47940035E 03	-0.64287284E 03	-0.12673022E 03
-0.53796020E 03	0.60204702E 03	0.25794728E 03	0.87594514E 02	0.23556738E 04	-0.75666466E 04	0.80566063E 04
0.57672447E 03	0.25052559E 04	-0.51028621E 02	0.11465606E 04	0.11668640E 03	0.72050142E 03	0.77987526E 02
-0.16241565E 03	0.59899627E 03	-0.29327687E 03				

I = 15

-0.67287942E 00	-0.75523206E 01	-0.93446188E 00	-0.14934228E 01	-0.14555515E 02	0.32530771E 01	-0.43287503E 01
-0.26580766E 01	-0.62708424E 01	0.84013376E 00	-0.75580784E 00	0.57209384E 00	-0.55977237E 00	0.57672448E 03
0.89579785E 04	-0.82551241E 04	0.51195822E 01	-0.70372760E 00	0.47273235E 01	-0.50405107E 02	0.33081669E-00
0.30369244E 02	-0.56308994E 02	0.36653329E 02				

I = 16

0.25313061E 02	0.28269210E 03	0.67286088E 01	0.10358755E 03	0.21220914E 03	-0.26628424E 03	-0.63093365E 02
-0.26076373E 03	0.24962328E 03	0.12372782E 03	0.44520242E 02	0.10827108E 04	-0.27678578E 04	0.25052559E 04
-0.82551241E 04	0.87685917E 04	-0.14342166E 02	0.64011978E 03	0.54291269E 02	0.35421445E 03	0.40824426E 02
-0.13563799E 03	0.32537393E 03	-0.19941498E 03				

I = 17

-0.23911391E 01	-0.26524726E 02	0.11298496E 01	-0.82433642E 01	0.12476108E 02	0.27980784E 02	0.13678914E 02
0.20365223E 02	-0.24022978E 02	-0.98137117E 01	-0.12651348E 02	-0.70993599E 02	0.99783105E 02	-0.51028628E 02
0.51195860E 01	-0.14342173E 02	0.75512064E 04	-0.43086989E 03	-0.34025926E 02	0.12414563E 03	-0.98451975E 01
-0.12053025E 03	0.17438439E 03	-0.13446903E 03				

I = 18

0.78851407E 01	0.93196474E 02	-0.32053284E 02	0.68509702E 00	-0.11227810E 03	0.15181184E 03	-0.62649610E 02
0.32851843E 01	-0.14723887E 03	-0.15907816E 02	0.52773697E 02	-0.21706829E 01	0.51770095E 01	0.11465606E 04
-0.70374020E 00	0.64011980E 03	-0.43086989E 03	0.11927527E 05	-0.63654283E 02	-0.63232847E 03	-0.24239384E 01
-0.18011738E 03	-0.33854916E 03	-0.76935987E 02				

I = 19

0.10536579E 01	0.22488448E 02	0.10799270E 03	-0.13404092E 02	0.24696244E 02	0.36511362E 02	0.18947[illegible]3E 03
-0.18926158E 02	0.75848255E-02	0.19541515E 02	-0.14950816E 03	0.92340904E 01	-0.19158226E 02	0.11668540E 03
0.47273158E 01	0.54291254E 02	-0.34025926E 02	-0.63654239E 02	0.12575386E 05	-0.21798865E 03	0.14249997E 02
0.10200611E 03	-0.15571102E 03	0.10487216E 03				

I = 20

-0.11143325E 01	-0.25974055E 01	0.15683521E 01	0.60376054E 02	0.13804457E 03	-0.27051162E 02	-0.28743439E 02
-0.14923958E 03	0.23781246E 02	0.59575632E 02	0.12097338E 02	0.38166221E 03	-0.42154524E 03	0.72050140E 03
-0.50405151E 02	0.35421442E 03	0.12414560E 03	-0.63232846E 03	-0.21798865E 03	0.22948423E 05	0.24143443E 05
-0.21345913E 05	0.95948835E 03	-0.13941026E 04				

I = 21

-0.51230241E 01	-0.53359271E 02	0.32169914E 01	-0.69083858E 00	-0.37832581E 02	0.17017512E 02	0.49447977E 01
-0.56409254E 00	-0.13652175E 02	-0.14219365E-00	-0.34134573E 01	0.52511815E-01	-0.71420850E 00	0.77987517E 02
0.33080526E-00	0.40824410E 02	-0.98451796E 01	-0.24239423E 01	0.14249966E 02	0.24143442E 05	0.26231031E 05
-0.22361479E 05	-0.14484137E 03	-0.24880251E 03				

I = 22

0.56113556E 01	0.58529113E 02	0.46487500E-00	-0.20321605E 02	-0.95705251E 02	-0.82698460E 02	0.20538379E 01
0.49216376E 02	0.75613470E 02	-0.16875681E 02	0.19156390E 02	0.17463390E 03	-0.11483251E 03	-0.16241562E 03
0.30369282E 02	-0.13563799E 03	-0.12053026E 03	-0.18011739E 03	0.10200612E 03	-0.21345913E 05	-0.22361479E 05
0.20101911E 05	-0.66835336E 03	0.12119466E 04				

I = 23

-0.25451855E 01	-0.21042461E 02	0.26601296E 01	0.39792848E 02	0.18379848E 03	0.21659064E 02	-0.38535254E 01
-0.98303308E 02	-0.16588980E 02	0.37798542E 02	-0.85560460E 01	0.23398801E 03	-0.25157604E 03	0.59899628E 03
-0.56308991E 02	0.32537392E 03	0.17438439E 03	-0.33854914E 03	-0.15571102E 03	0.95948830E 03	-0.14484140E 03
-0.66835336E 03	0.50591429E 04	-0.50466173E 04				

I = 24

0.55378447E 01	0.58485601E 02	-0.18573038E 01	-0.12703338E 02	-0.16574881E 03	-0.89771345E 02	-0.16524351E 02
0.30563555E 02	0.76234142E 02	-0.98787244E 01	0.29043008E 02	0.83670081E 02	-0.54534917E 02	-0.29327687E 03
0.36653335E 02	-0.19941497E 03	-0.13446902E 03	-0.76935988E 02	0.10487216E 03	-0.13941027E 04	-0.24880247E 03
0.12119466E 04	-0.50466172E 04	0.51301295E 04				

I = 1

GENERALIZED MASS SA-8 RUN #1

0.14019132E 05	-0.38877776E 03	-0.68963010E 02	0.71012337E 02	0.59850177E 02	-0.17148605E 02	-0.11125981E 03
-0.96699613E 02	-0.17965721E 02	0.14856931E 03	-0.16812553E 02	0.10185279E 03	-0.62587291E-01	-0.62587291E-01
-0.62587291E-01	-0.62587291E-01	-0.62587291E-01	-0.62587291E-01	-0.62587291E-01	-0.62587291E-01	-0.62587291E-01
-0.62587291E-01						

I = 2

-0.38877776E 03	0.13816024E 05	0.16171471E 02	-0.17889456E 02	-0.16845948E 02	0.34046891E 02	0.32493833E 02
0.31401407E 02	-0.10447155E 02	0.18146058E 02	0.22513983E 02	-0.17028518E 03	-0.10650690E 04	-0.10650690E 04
-0.10650690E 04	-0.10650690E 04	-0.10650690E 04	-0.10650690E 04	-0.10650690E 04	-0.10650690E 04	-0.10650690E 04
-0.10650690E 04						

I = 3

-0.68963005E 02	0.16171471E 02	0.57846183E 04	-0.18054502E 04	-0.10153608E 04	0.55332509E 03	0.22362179E 04
0.17901517E 04	0.22516657E 03	-0.17255951E 04	-0.50395986E 03	-0.65677500E 03	-0.34954877E 03	-0.34954877E 03
-0.34954877E 03	-0.34954877E 03	-0.34954877E 03	-0.34954877E 03	-0.34954877E 03	-0.34954877E 03	-0.34954877E 03
-0.34954877E 03						

I = 4

0.71012337E 02	-0.17889455E 02	-0.18054502E 04	0.47359359E 04	0.46639700E 04	0.81622233E 03	-0.20146809E 04
-0.18422765E 04	-0.17721964E 03	0.18632709E 04	0.59941259E 03	0.75750058E 03	0.22232759E 04	0.22232759E 04
0.22232759E 04	0.22232759E 04	0.22232759E 04	0.22232759E 04	0.22232759E 04	0.22232759E 04	0.22232759E 04
0.22232759E 04						

I = 5

0.59850179E 02	-0.16845955E 02	-0.10153608E 04	0.46639701E 04	0.47208284E 04	0.94201200E 03	-0.16568641E 04
-0.15689690E 04	-0.19744030E 03	0.14667045E 04	0.44101722E 03	0.74991465E 03	0.23062813E 04	0.23062813E 04
0.23062813E 04	0.23062813E 04	0.23062813E 04	0.23062813E 04	0.23062813E 04	0.23062813E 04	0.23062813E 04
0.23062813E 04						

I = 6

-0.17148603E 02	0.34046891E 02	0.55332510E 03	0.81622232E 03	0.94201200E 03	0.31146690E 04	0.25655115E 04
0.24218731E 04	-0.51246919E 03	0.10992078E 04	0.55139332E 03	-0.60624724E 03	0.14477815E 04	0.14477815E 04
0.14477815E 04	0.14477815E 04	0.14477815E 04	0.14477815E 04	0.14477815E 04	0.14477815E 04	0.14477815E 04
0.14477815E 04						

I = 7

-0.11125982E 03	0.32493835E 02	0.22362179E 04	-0.20146809E 04	-0.16568641E 04	0.25655115E 04	0.54938108E 04
0.49709260E 04	0.24017078E 03	-0.28693524E 04	-0.10144299E 04	-0.84068310E 03	0.82641564E 03	0.82641564E 03
0.82641564E 03	0.82641564E 03	0.82641564E 03	0.82641564E 03	0.82641564E 03	0.82641564E 03	0.82641564E 03
0.82641564E 03						

I = 8

-0.96699614E 02	0.31401401E 02	0.17901517E 04	-0.18422765E 04	-0.15689690E 04	0.24218731E 04	0.49709260E 04
0.45406139E 04	0.29522533E 03	-0.22772253E 04	-0.73163158E 03	-0.89997622E 03	0.73890257E 03	0.73890257E 03
0.73890257E 03	0.73890257E 03	0.73890257E 03	0.73890257E 03	0.73890257E 03	0.73890257E 03	0.73890257E 03
0.73890257E 03						

I = 9

-0.17965721E 02	-0.10447153E 02	0.22516656E 03	-0.17721964E 03	-0.19744030E 03	-0.51246919E 03	0.24017078E 03
0.29522533E 03	0.14076155E 04	-0.53221020E 03	-0.28692774E 03	0.19427378E 03	0.17113215E 03	0.17113215E 03
0.17113215E 03	0.17113215E 03	0.17113215E 03	0.17113215E 03	0.17113215E 03	0.17113215E 03	0.17113215E 03
0.17113215E 03						

I = 10

0.14856930E 03	0.18146054E 02	-0.17255951E 04	0.18632709E 04	0.14667045E 04	0.10992078E 04	-0.28693523E 04
-0.22772253E 04	-0.53221020E 03	0.65753273E 04	0.28731773E 04	-0.75226583E 03	-0.21815766E 03	-0.21815766E 03
-0.21815766E 03	-0.21815766E 03	-0.21815766E 03	-0.21815766E 03	-0.21815766E 03	-0.21815766E 03	-0.21815766E 03
-0.21815766E 03						

I = 11

-0.16812553E 02	0.22513986E 02	-0.50395986E 03	0.59941259E 03	0.44101723E 03	0.55139330E 03	-0.10144299E 04
-0.73163157E 03	-0.28692774E 03	0.28731773E 04	0.85023813E 04	-0.59935091E 04	0.32659976E 04	0.32659976E 04
0.32659976E 04	0.32659976E 04	0.32659976E 04	0.32659976E 04	0.32659976E 04	0.32659976E 04	0.32659976E 04
0.32659976E 04						

I = 12

0.10185279E 03	-0.17028517E 03	-0.65677500E 03	0.75750058E 03	0.74991465E 03	-0.60624724E 03	-0.84068310E 03
-0.89997622E 03	0.19427378E 03	-0.75226581E 03	-0.59935091E 04	0.79948774E 04	0.22350015E 04	0.22350015E 04
0.22350015E 04	0.22350015E 04	0.22350015E 04	0.22350015E 04	0.22350015E 04	0.22350015E 04	0.22350015E 04
0.22350015E 04						

I = 13

-0.62587291E-01	-0.10650690E 04	-0.34954877E 03	0.22232759E 04	0.23062813E 04	0.14477815E 04	0.82641564E 03
0.73890257E 03	0.17113215E 03	-0.21815766E 03	0.32659976E 04	0.22350015E 04	0.34682000E 05	0.34682000E 05
0.34682000E 05	0.34682000E 05	0.34682000E 05	0.34682000E 05	0.34682000E 05	0.34682000E 05	0.34682000E 05
0.34682000E 05						

I = 14

-0.62587291E-01	-0.10650690E 04	-0.34954877E 03	0.22232759E 04	0.23062813E 04	0.14477815E 04	0.82641564E 03
0.73890257E 03	0.17113215E 03	-0.21815766E 03	0.32659976E 04	0.22350015E 04	0.34682000E 05	0.34682000E 05
0.34682000E 05	0.34682000E 05	0.34682000E 05	0.34682000E 05	0.34682000E 05	0.34682000E 05	0.34682000E 05
0.34682000E 05						

I = 15

-0.62587291E-01	-0.10650690E 04	-0.34954877E 03	0.22232759E 04	0.23062813E 04	0.14477815E 04	0.82641564E 03
0.73890257E 03	0.17113215E 03	-0.21815766E 03	0.32659976E 04	0.22350015E 04	0.34682000E 05	0.34682000E 05
0.34682000E 05	0.34682000E 05	0.34682000E 05	0.34682000E 05	0.34682000E 05	0.34682000E 05	0.34682000E 05
0.34682000E 05						

I = 16

-0.62587291E-01	-0.10650690E 04	-0.34954877E 03	0.22232759E 04	0.23062813E 04	0.14477815E 04	0.82641564E 03
0.73890257E 03	0.17113215E 03	-0.21815766E 03	0.32659976E 04	0.22350015E 04	0.34682000E 05	0.34682000E 05
0.34682000E 05	0.34682000E 05	0.34682000E 05	0.34682000E 05	0.34682000E 05	0.34682000E 05	0.34682000E 05
0.34682000E 05						

I = 17

-0.62587291E-01	-0.10650690E 04	-0.34954877E 03	0.22232759E 04	0.23062813E 04	0.14477815E 04	0.82641564E 03
0.73890257E 03	0.17113215E 03	-0.21815766E 03	0.32659976E 04	0.22350015E 04	0.34682000E 05	0.34682000E 05
0.34682000E 05	0.34682000E 05	0.34682000E 05	0.34682000E 05	0.34682000E 05	0.34682000E 05	0.34682000E 05
0.34682000E 05						

I = 18

-0.62587291E-01	-0.10650690E 04	-0.34954877E 03	0.22232759E 04	0.23062813E 04	0.14477815E 04	0.82641564E 03
0.73890257E 03	0.17113215E 03	-0.21815766E 03	0.32659976E 04	0.22350015E 04	0.34682000E 05	0.34682000E 05
0.34682000E 05	0.34682000E 05	0.34682000E 05	0.34682000E 05	0.34682000E 05	0.34682000E 05	0.34682000E 05
0.34682000E 05						

I = 19

-0.62587291E-01	-0.10650690E 04	-0.34954877E 03	0.22232759E 04	0.23062813E 04	0.14477815E 04	0.82641564E 03
0.73890257E 03	0.17113215E 03	-0.21815766E 03	0.32659976E 04	0.22350015E 04	0.34682000E 05	0.34682000E 05
0.34682000E 05	0.34682000E 05	0.34682000E 05	0.34682000E 05	0.34682000E 05	0.34682000E 05	0.34682000E 05
0.34682000E 05						

I = 20

-0.62587291E-01	-0.10650690E 04	-0.34954877E 03	0.22232759E 04	0.23062813E 04	0.14477815E 04	0.82641564E 03
0.73890257E 03	0.17113215E 03	-0.21815766E 03	0.32659976E 04	0.22350015E 04	0.34682000E 05	0.34682000E 05
0.34682000E 05	0.34682000E 05	0.34682000E 05	0.34682000E 05	0.34682000E 05	0.34682000E 05	0.34682000E 05
0.34682000E 05						

I = 21

-0.62587291E-01	-0.10650690E 04	-0.34954877E 03	0.22232759E 04	0.23062813E 04	0.14477815E 04	0.82641564E 03
0.73890257E 03	0.17113215E 03	-0.21815766E 03	0.32659976E 04	0.22350015E 04	0.34682000E 05	0.34682000E 05
0.34682000E 05	0.34682000E 05	0.34682000E 05	0.34682000E 05	0.34682000E 05	0.34682000E 05	0.34682000E 05
0.34682000E 05						

I = 22

-0.62587291E-01	-0.10650690E 04	-0.34954877E 03	0.22232759E 04	0.23062813E 04	0.14477815E 04	0.82641564E 03
0.73890257E 03	0.17113215E 03	-0.21815766E 03	0.32659976E 04	0.22350015E 04	0.34682000E 05	0.34682000E 05
0.34682000E 05	0.34682000E 05	0.34682000E 05	0.34682000E 05	0.34682000E 05	0.34682000E 05	0.34682000E 05
0.34682000E 05						

I = 1 GENERALIZED MASS SA-8 RUN #2

0.13654235E 05	0.81235470E 02	0.25727116E 02	0.47351372E 02	0.18378311E 03	-0.22891506E 02	-0.39325246E 02
-0.29662473E 03	0.38399432E 03	-0.21323079E 03	0.38910134E 02	0.11295554E 03	0.13278079E 03	-0.12260016E 03
0.92499990E 02	-0.10023668E 03	0.51907305E 03	0.19911418E 02	-0.10904201E 04	-0.10904201E 04	-0.10904201E 04
-0.10904201E 04	-0.10904201E 04	-0.10904201E 04	-0.10904201E 04			

I = 2

0.81235468E 02	0.85373954E 04	0.41793041E 02	0.31721116E 03	0.88514875E 03	0.79892595E 01	-0.26304109E 03
-0.28571700E 03	0.17059956E 03	-0.19866157E 03	0.70202763E 02	0.91198178E 02	0.18484435E 03	-0.15746395E 03
-0.45679164E 03	0.42380258E 03	0.28499135E 04	0.13273570E 03	-0.37013858E-01	-0.37013858E-01	-0.37013858E-01
-0.37013858E-01	-0.37013858E-01	-0.37013858E-01	-0.37013858E-01			

I = 3

0.25727117E 02	0.41793041E 02	0.56206276E 04	0.44152306E 02	0.24063613E 03	0.71719059E 01	0.57184717E 02
-0.29253602E 02	-0.17705353E 01	-0.39745688E 02	0.10725258E 02	-0.17308811E 02	0.83565310E 01	-0.20914468E 01
-0.61471359E 01	-0.31800679E 01	0.69868938E 02	0.12588933E 03	-0.16157013E 04	-0.16157013E 04	-0.16157013E 04
-0.16157013E 04	-0.16157013E 04	-0.16157013E 04	-0.16157013E 04			

I = 4

0.47351372E 02	0.31721116E 03	0.44152304E 02	0.41401561E 04	0.14966568E 04	-0.14570253E 03	-0.34826458E 03
-0.26608750E 03	-0.30383515E 02	0.28570406E 02	0.23297525E 02	-0.12192626E 03	0.57657047E 02	-0.39170326E 02
-0.26885845E 02	-0.31960680E 02	0.65162525E 03	0.73310109E 03	0.59779121E 03	0.59779121E 03	0.59779121E 03
0.59779121E 03	0.59779121E 03	0.59779121E 03	0.59779121E 03			

I = 5

0.18378311E 03	0.88514875E 03	0.24063613E 03	0.14966568E 04	0.64240529E 04	-0.56284066E 03	-0.11912349E 04
-0.13018191E 04	-0.95002411E 02	0.12763172E 03	-0.22305413E 02	-0.40943007E 03	0.21038618E 03	-0.18718161E 03
-0.96180300E 02	-0.11872586E 03	0.22763681E 04	0.26525185E 04	0.10872950E 04	0.10872950E 04	0.10872950E 04
0.10872950E 04	0.10872950E 04	0.10872950E 04	0.10872950E 04			

I = 6

-0.22891507E 02	0.79892594E 01	0.71719097E 01	-0.14570253E 03	-0.56284066E 03	0.40400909E 04	0.10775458E 03
0.27417540E 03	0.20927184E 02	-0.21777793E 02	0.39481754E 02	0.55950321E 02	-0.25697160E 02	0.38393971E 02
0.95166305E 01	0.15510633E 02	-0.24146674E 03	-0.30047508E 03	-0.58864263E 03	-0.58864263E 03	-0.58864263E 03
-0.58864263E 03	-0.58864263E 03	-0.58864263E 03	-0.58864263E 03			

I = 7

-0.39325245E 02	-0.26304109E 03	0.57184717E 02	-0.34826458E 03	-0.11912349E 04	0.10775457E 03	0.10962354E 05
0.17355846E 03	0.67415491E 02	-0.35853682E 02	-0.32815535E 02	0.20937083E 03	-0.30978823E 02	0.23201036E 02
0.23530375E 02	0.23442192E 02	-0.51660384E 03	-0.57330799E 03	0.69711407E 02	0.69711407E 02	0.69711407E 02
0.69711407E 02	0.69711407E 02	0.69711407E 02	0.69711407E 02			

I = 8

-0.29662473E 03	-0.28571699E 03	-0.29253595E 02	-0.26608751E 03	-0.13018191E 04	0.27417541E 03	0.17355847E 03
0.60810868E 04	-0.37415577E 04	-0.25604636E 03	0.60700982E 03	0.18583780E 03	-0.55991636E 02	0.31597344E 03
0.56639785E 02	0.46697974E 02	-0.39603574E 03	-0.50908960E 03	-0.41069493E 03	-0.41069493E 03	-0.41069493E 03
-0.41069493E 03	-0.41069493E 03	-0.41069493E 03	-0.41069493E 03			

I = 9

0.38399431E 03	0.17059956E 03	-0.17705411E 01	-0.30383510E 02	-0.95002413E 02	0.20927183E 02	0.67415498E 02
-0.37415577E 04	0.56593236E 04	-0.32142538E 04	0.13677188E 03	0.65931419E 02	0.21105552E 02	0.45953938E 02
0.14547967E 01	0.45600073E 01	-0.12045852E 03	0.28918577E 01	0.56154519E 03	0.56154519E 03	0.56154519E 03
0.56154519E 03	0.56154519E 03	0.56154519E 03	0.56154519E 03			

I = 10

-0.21323C79E 03	-C.19866157E C3	-0.39745688E 02	C.28570407E 02	0.12763172E C3	-C.21777793E 02	-0.35853682E 02
-0.25604635E 03	-C.32142538E 04	0.65873300E 04	-0.66709264E 02	-0.24984604E 03	-C.10687057E 03	-0.38897140E 02
-0.41312282E 01	-C.74517720E C1	0.79384498E 02	0.23921087E 02	-0.25232580E 03	-C.25232580E 03	-0.25232580E 03
-0.25232580E 03	-C.25232580E C3	-0.25232580E 03	-0.25232580E 03			

I = 11

0.38910134E 02	C.702C2761E C2	0.1C725258E 02	0.23297530E 02	-0.22305413E C2	C.29481751E 02	-0.32815532E 02
0.60700981E 03	C.13677188E C3	-0.667C9261E 02	0.27375095E 04	0.98973523E 03	C.80602298E 03	0.81035618E 02
0.18208943E 01	C.11369956E 02	-0.77008159E 01	0.20953905E 02	-0.18284734E C3	-C.18284734E 03	-0.18284734E 03
-0.18284734E 03	-C.18284734E 03	-0.18284734E 03	-0.18284734E 03			

I = 12

0.11295594E 03	C.91198179E 02	-0.17308812E 02	-0.12192627E 03	-0.40943C07E 03	0.55950321E 02	0.20937C83E 03
0.18583780E 03	C.65931418E C2	-0.24984604E 03	0.98973523E 03	0.28655502E 04	C.27642575E 04	-0.25530819E 04
0.54696281E 01	C.12788140E C2	-0.22689798E 03	-0.15993091E 03	-0.70843594E C3	-C.70843594E 03	-0.70843594E 03
-0.70843594E 03	-C.70843594E C3	-0.70843594E 03	-0.70843594E 03			

I = 13

0.13278C79E 03	C.18484435E C3	0.83565268E 01	0.57657047E 02	0.21038618E 03	-C.25697162E 02	-0.30978825E 02
-0.55991638E 02	C.21105554E C2	-0.10687058E 03	0.80602298E 03	0.27642575E 04	C.27595223E 04	-0.26072830E 04
-0.90140674E 01	-C.47375081E-00	0.50429927E 02	0.11266552E 03	-0.70341843E C3	-C.70341843E 03	-0.70341843E 03
-0.70341843E 03	-C.70341843E C3	-0.70341843E 03	-0.70341843E 03			

I = 14

-0.12260C16E 03	-C.15746395E 03	-0.20914472E 01	-0.39170323E 02	-0.18718161E 03	C.28393971E 02	0.23201C33E 02
0.31597344E 03	C.45953950E C2	-0.38897135E 02	0.81035616E 02	-0.25530819E 04	-C.26072830E 04	0.27508580E 04
0.69885918E 01	C.61376042E C1	-0.31869426E 02	-0.96331011E 02	0.67406489E C3	C.67406489E 03	0.67406489E 03
0.67406489E 03	C.67406489E C3	0.67406489E 03	0.67406489E 03			

I = 15

0.92499990E 02	-C.45678164E C3	-0.61471398E 01	-0.26885843E 02	-0.96180298E C2	C.95166303E 01	0.23530374E 02
0.56639788E 02	C.14547989E C1	-0.41312277E 01	0.18208939E 01	0.54696212E C1	-C.90140676E 01	0.69885917E 01
0.11420467E 04	-C.11423372E C4	-0.70294430E 02	-0.23476924E 02	-0.15096220E 03	-C.15096220E 03	-0.15096220E 03
-0.15096220E 03	-C.15096220E C3	-0.15096220E 03	-0.15096220E 03			

I = 16

-0.10023668E 03	C.42380258E C3	-0.31800706E 01	-0.31960680E 02	-0.11872586E 03	C.15510634E 02	0.23442192E 02
0.46697973E 02	C.45600086E C1	-0.74517702E 01	0.11369956E 02	0.12788137E C2	-C.47374892E-00	0.61376122E 01
-0.11423372E 04	C.11528908E C4	-0.18642260E 02	-0.71674482E 02	0.15171258E C3	C.15171258E 03	0.15171258E 03
0.15171258E 03	C.15171258E 03	0.15171258E 03	0.15171258E 03			

I = 17

0.51907304E 03	C.28499135E 04	0.69868934E 02	0.65162525E 03	0.22763681E C4	-C.24146674E 03	-0.51660384E 03
-0.39603572E 03	-0.12045852E 03	0.79384489E 02	-0.77008175E 01	-0.22689798E 03	C.50429925E 02	-0.31869424E 02
-0.70294429E 02	-C.18642262E C2	0.13657287E 05	0.11506587E 04	-0.83970338E 03	-C.83970338E 03	-0.83970338E 03
-0.83970338E 03	-C.83970338E C3	-0.83970338E 03	-0.83970338E 03			

I = 18

0.19911418E 02	C.13273570E C3	0.12588934E 03	0.73310109E 03	0.26525185E C4	-C.30047508E 03	-0.57330799E 03
-0.50908960E 03	C.28918616E C1	0.23921098E 02	0.20953906E 02	-0.15993091E C3	C.11266552E 03	-0.96331014E 02
-0.23476924E 02	-C.71674484E C2	0.11506587E 04	0.51250123E 04	-0.29986563E C4	-C.29986563E 04	-0.29986563E 04
-0.29986563E 04	-C.29986563E C4	-0.29986563E 04	-0.29986563E 04			

I = 19

-0.10904201E 04	-C.37013858E-01	-0.16157013E 04	0.59779121E 03	0.10872950E 04	-C.58864263E 03	0.69711407E 02
-0.41069493E 03	C.56154519E 03	-0.25232580E 03	-0.18284734E 03	-0.70843594E 03	-C.70341843E 03	0.67406489E 03
-0.15096220E 03	C.15171258E 03	-0.83970338E 03	-0.29986563E 04	0.34682000E 05	C.34682000E 05	0.34682000E 05
0.34682000E 05	C.34682000E 05	0.34682000E 05	C.34682000E 05			

I = 20

-0.10904201E 04	-C.37013858E-01	-0.16157013E 04	0.59779121E 03	0.10872950E 04	-C.58864263E 03	0.69711407E 02
-0.41069493E 03	C.56154519E 03	-0.25232580E 03	-0.18284734E 03	-0.70843594E 03	-C.70341843E 03	0.67406489E 03
-0.15096220E 03	C.15171258E 03	-0.83970338E 03	-0.29986563E 04	0.34682000E 05	C.34682000E 05	0.34682000E 05
0.34682000E 05	C.34682000E 05	0.34682000E 05	0.34682000E 05			

I = 21

-0.10904201E 04	-C.37013858E-01	-0.16157013E 04	0.59779121E 03	0.10872950E 04	-C.58864263E 03	0.69711407E 02
-0.41069493E 03	C.56154519E 03	-0.25232580E 03	-0.18284734E 03	-0.70843594E 03	-C.70341843E 03	0.67406489E 03
-0.15096220E 03	C.15171258E 03	-0.83970338E 03	-0.29986563E 04	0.34682000E 05	C.34682000E 05	0.34682000E 05
0.34682000E 05	C.34682000E 05	0.34682000E 05	0.34682000E 05			

I = 22

-0.10904201E 04	-C.37013858E-01	-0.16157013E 04	0.59779121E 03	0.10872950E 04	-C.58864263E 03	0.69711407E 02
-0.41069493E 03	C.56154519E 03	-0.25232580E 03	-0.18284734E 03	-0.70843594E 03	-0.70341843E 03	0.67406489E 03
-0.15096220E 03	C.15171258E 03	-0.83970338E 03	-0.29986563E 04	0.34682000E 05	C.34682000E 05	0.34682000E 05
0.34682000E 05	C.34682000E 05	0.34682000E 05	0.34682000E 05			

I = 23

-0.10904201E 04	-C.37013858E-01	-0.16157013E 04	0.59779121E 03	0.10872950E 04	-C.58864263E 03	0.69711407E 02
-0.41069493E 03	C.56154519E 03	-0.25232580E 03	-0.18284734E 03	-0.70843594E 03	-C.70341843E 03	0.67406489E 03
-0.15096220E 03	C.15171258E 03	-0.83970338E 03	-0.29986563E 04	0.34682000E 05	C.34682000E 05	0.34682000E 05
0.34682000E 05	C.34682000E 05	0.34682000E 05	0.34682000E 05			

I = 24

-0.10904201E 04	-C.37013858E-01	-0.16157013E 04	0.59779121E 03	0.10872950E 04	-C.58864263E 03	0.69711407E 02
-0.41069493E 03	C.56154519E 03	-0.25232580E 03	-0.18284734E 03	-0.70843594E 03	-C.70341843E 03	0.67406489E 03
-0.15096220E 03	C.15171258E 03	-0.83970338E 03	-0.29986563E 04	0.34682000E 05	C.34682000E 05	0.34682000E 05
0.34682000E 05	C.34682000E 05	0.34682000E 05	0.34682000E 05			

I = 25

-0.10904201E 04	-C.37013858E-01	-0.16157013E 04	0.59779121E 03	0.10872950E 04	-C.58864263E 03	0.69711407E 02
-0.41069493E 03	C.56154519E 03	-0.25232580E 03	-0.18284734E 03	-0.70843594E 03	-C.70341843E 03	0.67406489E 03
-0.15096220E 03	C.15171258E 03	-0.83970338E 03	-0.29986563E 04	0.34682000E 05	C.34682000E 05	0.34682000E 05
0.34682000E 05	C.34682000E 05	0.34682000E 05	0.34682000E 05			

I = 1 GENERALIZED MASS SA-8 RUN #3

0.14 17519E 05	0.16185662E-00	-0.59930274E-02	0.195[illegible]36 E-03	-0.22537396E 01	-0.31621951E-00	0.24459518E 01
0.29261280E-00	0.49257810E-00	0.17204627E 01	0.10091553E-02	-0.46380401E 01	0.92761100E-01	0.40726196E-01
0.16955599E-01	0.55575494E 00	-0.72938570E-02	-0.79339569E-01	-0.10413891E-00	0.12132476E-00	0.58957607E-01
-0.58378721E-01	-0.58378721E-01	-0.58378721E-01	-0.58378721E-01	-0.58378721E-01	-0.58378721E-01	-0.58378721E-01

I = 2

0.16185633E-00	0.15361083E 05	0.1779[illegible]171E-00	-0.97198640E 02	0.11313356E 04	0.16077164E 03	-0.12179647E 04
-0.14876893E 03	-0.24617624E 03	-0.86539180E 03	-0.14316268E 01	0.23231322E 04	-0.44398595E 02	-0.19621321E 02
-0.1[illegible]496198E 02	-0.27785755E 03	0.15325230E 02	0.34309151E 02	0.48402901E 02	-0.56868088E 02	-0.32714771E 02
-0.18388561E 02	-0.18388561E 02	-0.18388561E 02	-0.18388561E 02	-0.18388561E 02	-0.18388561E 02	-0.18388561E 02

I = 3

-0.50889371E-02	0.17797719E-00	0.81693300E 04	-0.11823162E 04	-0.22102993E 02	-0.73129304E 02	0.16150746E 03
-0.21969967E 03	-0.98016713E 03	-0.14253260E 03	0.19708234E 03	0.33137137E 02	-0.29335650E 01	0.69406263E 02
-0.16165771E 02	-0.23941177E 02	-0.12971412E 03	0.22892967E 02	0.23437715E 03	-0.26334438E 03	-0.16701353E 03
-0.19298719E 03	-0.19298719E 03	-0.19298719E 03	-0.19298719E 03	-0.19298719E 03	-0.19298719E 03	-0.19298719E 03

I = 4

0.19501271E-00	-0.97198636E 02	-0.11823162E 04	0.30435032E 04	0.18786079E 03	-0.29970504E 03	0.44480351E 03
0.14560582E 04	0.21077462E 04	0.29832314E 03	0.84624809E 03	0.17375944E 03	-0.14513057E 02	0.51325540E 03
-0.91738194E 02	-0.57957943E 02	-0.58324731E 03	0.32128923E 03	0.11177378E 04	-0.11213826E 04	-0.10175773E 04
0.30359434E 02	0.30359434E 02	0.30359434E 02	0.30359434E 02	0.30359434E 02	0.30359434E 02	0.30359434E 02

I = 5

-0.22537368E 01	0.11313356E 04	-0.22102983E 02	0.18786079E 03	0.57653398E 04	0.35782961E 03	-0.11795470E 03
-0.20578945E 02	-0.47456697E 02	-0.21272529E 02	-0.33014052E 02	-0.76112235E 01	-0.51001088E 01	-0.82888616E 01
-0.38245551E-00	0.11143867E 01	0.10305697E 02	-0.27604848E 02	-0.98584414E 01	0.10818908E 02	0.84757987E 01
0.16800418E 03	0.16800418E 03	0.16800418E 03	0.16800418E 03	0.16800418E 03	0.16800418E 03	0.16800418E 03

I = 6

-0.31621689E-00	0.16077163E 03	-0.73129305E 02	-0.29970504E 03	0.35782961E 03	0.40887747E 04	-0.46549111E 02
0.81963714E 02	0.91461070E 02	-0.25268768E 02	-0.18926019E 02	-0.45557591E 01	0.85770924E 01	0.11263588E 02
0.77512626E 00	-0.56960456E 00	0.83354599E 01	-0.48061123E 02	-0.14306451E-00	-0.11935800E 01	-0.36082024E 01
0.19437701E 03	0.19437701E 03	0.19437701E 03	0.19437701E 03	0.19437701E 03	0.19437701E 03	0.19437701E 03

I = 7

0.24459516E 01	-0.12179647E 04	0.16150747E 03	0.44480351E 03	-0.11795469E 03	-0.46549111E 02	0.41478498E 04
-0.38717970E 03	0.86124988E 01	0.14532500E 02	-0.13891801E 03	0.23848009E 01	-0.66932476E 01	-0.52704914E 01
-0.49129108E-00	0.91247254E 00	-0.25573369E 01	0.33899616E 02	-0.33900649E 01	0.29014187E 02	0.18262322E 02
0.26560894E 03	0.26560894E 03	0.26560894E 03	0.26560894E 03	0.26560894E 03	0.26560894E 03	0.26560894E 03

I = 8

0.29260982E-00	-0.14876893E 03	-0.21969966E 03	0.14560582E 04	-0.20578944E 02	0.81963714E 02	-0.38717970E 03
0.71192752E 04	0.17579716E 04	0.24311157E 03	0.54558652E 03	0.11018558E 03	-0.11437470E 02	0.28662919E 03
-0.45381984E 02	-0.44313175E 02	-0.26275933E 03	0.15196522E 03	0.53864906E 03	-0.56220588E 03	-0.50889853E 03
-0.30782232E 03	-0.30782232E 03	-0.30782232E 03	-0.30782232E 03	-0.30782232E 03	-0.30782232E 03	-0.30782232E 03

I = 9

0.49253209E-00	-0.24617624E 03	-0.98016714E 03	0.21077462E 04	-0.47456697E 02	0.91461061E 02	0.86124969E 01
0.17579716E 04	0.54944760E 04	0.16587926E 04	0.35968915E 03	0.63751851E 02	-0.63789346E 01	-0.44661499E 02
0.3[illegible]332.71E 01	0.30979180E 02	0.25379[illegible]E 03	0.16783484E 03	0.24774736E 02	0.19182914E 02	
0.18229954E 02	0.18229954E 02	0.18229954E 02	0.18229954E 02	0.18229954E 02	0.18229954E 02	0.18229954E 02

I = 19

-0.13413849E-00	0.48432899E 02	0.23437715E 03	0.11177378E 04	-0.98584399E 01	-0.14306630E-00	-0.33900651E 01
0.53864906E 03	-0.16783485E 03	-0.28767771E 02	0.16189006E 03	0.22176398E 01	-0.13694406E 02	0.10780158E 02
-0.31254175E 02	-0.32700272E 02	-0.15850923E 03	0.20703307E 03	0.10080260E 05	-0.10227750E 05	-0.77216128E 03
-0.69202647E 06	-0.69202647E 06	-0.69202647E 06	-0.69202647E 06	-0.69202647E 06	-0.69202647E 06	-0.69202647E 06

I = 20

0.12132371E-00	-0.56868084E 02	-0.26334438E 03	-0.11213826E 04	0.10818911E 02	-0.11935820E 01	0.29014186E 02
-0.56227592E 03	0.24774730E 02	0.47500005E 01	-0.16046800E 03	0.29254153E 01	0.14928181E 02	0.44117842E 02
0.40891739E 02	0.50899331E 02	0.31172008E 03	-0.18423861E 03	-0.10227750E 05	0.10601424E 05	0.40887593E 03
0.74860854E 06	0.74860854E 06	0.74860854E 06	0.74860854E 06	0.74860854E 06	0.74860854E 06	0.74860854E 06

I = 21

0.58958679E-01	-0.32714772E 02	-0.16701353E 03	-0.10175773E 04	0.84758011E 01	-0.36082014E 01	0.18262322E 02
-0.50889853E 03	0.19182912E 02	0.69516869E 01	-0.10333071E 03	0.39965726E 01	0.11505105E 02	0.24242295E 02
0.24823990E 02	0.33842259E 02	0.23499052E 03	-0.17274886E 03	-0.77216128E 03	0.40887593E 03	0.64866281E 04
-0.70763679E 06	-0.70763679E 06	-0.70763679E 06	-0.70763679E 06	-0.70763679E 06	-0.70763679E 06	-0.70763679E 06

I = 22

-0.58378721E-01	-0.18388561E 02	-0.19298719E 03	0.30359434E 02	0.16800418E 03	0.19437701E 03	0.26560894E 03
-0.30782232E 03	0.18229954E 02	0.14746373E 03	-0.24429851E 03	0.30653398E 04	0.23785624E 06	0.24272250E 03
0.97038041E 06	-0.65605022E 05	0.60990874E 04	-0.11545643E 07	-0.69202647E 06	0.74860854E 06	-0.70763679E 06
0.77688400E 09	0.77688400E 09	0.77688400E 09	0.77688400E 09	0.77688400E 09	0.77688400E 09	0.77688400E 09

I = 23

-0.58378721E-01	-0.18388561E 02	-0.19298719E 03	0.30359434E 02	0.16800418E 03	0.19437701E 03	0.26560894E 03
-0.30782232E 03	0.18229954E 02	0.14746373E 03	-0.24429851E 03	0.30653398E 04	0.23785624E 06	0.24272250E 03
0.97038041E 06	-0.65605022E 05	0.60990874E 04	-0.11545643E 07	-0.69202647E 06	0.74860854E 06	-0.70763679E 06
0.77688400E 09	0.77688400E 09	0.77688400E 09	0.77688400E 09	0.77688400E 09	0.77688400E 09	0.77688400E 09

I = 24

-0.58378721E-01	-0.18388561E 02	-0.19298719E 03	0.30359434E 02	0.16800418E 03	0.19437701E 03	0.26560894E 03
-0.30782232E 03	0.18229954E 02	0.14746373E 03	-0.24429851E 03	0.30653398E 04	0.23785624E 06	0.24272250E 03
0.97038041E 06	-0.65605022E 05	0.60990874E 04	-0.11545643E 07	-0.69202647E 06	0.74860854E 06	-0.70763679E 06
0.77688400E 09	0.77688400E 09	0.77688400E 09	0.77688400E 09	0.77688400E 09	0.77688400E 09	0.77688400E 09

I = 25

-0.58378721E-01	-0.18388561E 02	-0.19298719E 03	0.30359434E 02	0.16800418E 03	0.19437701E 03	0.26560894E 03
-0.30782232E 03	0.18229954E 02	0.14746373E 03	-0.24429851E 03	0.30653398E 04	0.23785624E 06	0.24272250E 03
0.97038041E 06	-0.65605022E 05	0.60990874E 04	-0.11545643E 07	-0.69202647E 06	0.74860854E 06	-0.70763679E 06
0.77688400E 09	0.77688400E 09	0.77688400E 09	0.77688400E 09	0.77688400E 09	0.77688400E 09	0.77688400E 09

I = 26

-0.58378721E-01	-0.18388561E 02	-0.19298719E 03	0.30359434E 02	0.16800418E 03	0.19437701E 03	0.26560894E 03
-0.30782232E 03	0.18229954E 02	0.14746373E 03	-0.24429851E 03	0.30653398E 04	0.23785624E 06	0.24272250E 03
0.97038041E 06	-0.65605022E 05	0.60990874E 04	-0.11545643E 07	-0.69202647E 06	0.74860854E 06	-0.70763679E 06
0.77688400E 09	0.77688400E 09	0.77688400E 09	0.77688400E 09	0.77688400E 09	0.77688400E 09	0.77688400E 09

I = 27

-0.58378721E-01	-0.18388561E 02	-0.19298719E 03	0.30359434E 02	0.16800418E 03	0.19437701E 03	0.26560894E 03
-0.30782232E 03	0.18229954E 02	0.14746373E 03	-0.24429851E 03	0.30653398E 04	0.23785624E 06	0.24272250E 03
0.97038041E 06	-0.65605022E 05	0.60990874E 04	-0.11545643E 07	-0.69202647E 06	0.74860854E 06	-0.70763679E 06
0.77688400E 09	0.77688400E 09	0.77688400E 09	0.77688400E 09	0.77688400E 09	0.77688400E 09	0.77688400E 09

I = 1

0.172[illegible]4621E 1	-0.[illegible]6539189E 03	-0.1425326[illegible]E 03	0.29832314E 03	-0.21272516E 02	-0.29268772E 02	0.145[illegible]2471E 02
0.24311156E 03	0.16587926E 04	0.63378[illegible]4E 04	0.26519929E 02	-0.41765121E 01	-0.13520573E 02	-0.21863279E 02
-0.19379459E 01	0.57297416E 01	0.43624299E 02	0.12552715E 02	-0.28760779E 02	0.47509[illegible]08E 01	0.69516831E 01
0.14746373E 03	0.14746373E 03	0.14746373E 03	0.14746373E 03	0.14746373E 03	0.14746373E 03	0.14746373E 03

I = 11

0.1[illegible]1239E-[illegible]	-0.14316299E 01	0.197[illegible]8234E 03	0.84624[illegible]8E 03	-0.33014054E 02	-0.18926[illegible]19E 02	-0.13891872E 03
0.24558[illegible]E 03	0.3[illegible]E 03	0.26519933E 02	0.27315781E 04	-0.93943100E 02	-0.34[illegible]517E 01	0.13383983E 03
-0.76975335E 01	-0.26388144E 02	-0.11[illegible]648E 03	0.67938[illegible]1E 02	0.16189006E 03	-0.16[illegible]466[illegible]E 03	-0.10[illegible]3370E 03
-0.24429851E 03	-0.24429851E 03	-0.24429851E 03	-0.24429851E 03	-0.24429851E 03	-0.24429851E 03	-0.24429851E 03

I = 12

-0.46387411E 01	0.23231322E 04	0.33137137E 02	0.17375944E 03	-0.76112261E 01	-0.45557587E 01	0.23848014E 01
0.11718558E 03	0.63751853E 02	-0.41765086E 01	-0.93943094E 02	0.80401204E 04	0.70324130E 01	-0.18073981E 02
0.19389274E 01	-0.21543749E 01	-0.12[illegible]3396E 02	0.10512210E 02	0.22176369E 01	0.29254122E 01	0.39965706E 01
0.3[illegible]653398E 04	0.3[illegible]653398E 04	0.37653398E 04	0.30653398E 04	0.30653398E 04	0.30653398E 04	0.30653398E 04

I = 13

0.92758[illegible]1E-01	-0.44398592E 02	-0.29335678E 01	-0.14513058E 02	-0.51001113E 01	0.85770904E 01	-0.66932468E 01
-0.1143747[illegible]E 02	-0.63789362E 01	-0.13520566E 02	-0.34[illegible]0468E 01	0.70323978E 01	0.89594326E 04	0.12928949E 02
-0.76286433E 00	-0.99458939E 00	0.58886231E 01	-0.90395017E 00	-0.13694417E 02	0.14928189E 02	0.11505119E 02
0.23785624E 06	0.23785624E 06	0.23785624E 06	0.23785624E 06	0.23785624E 06	0.23785624E 06	0.23785624E 06

I = 14

0.40726926E-01	-0.19621322E 02	0.69[illegible]6263E 02	0.51325540E 03	-0.82888620E 01	0.11263588E 02	-0.52704883E 01
0.28662919E 03	-0.44661499E 02	-0.21863282E 02	0.13383982E 03	-0.18073982E 02	0.12928949E 02	0.11052244E 04
0.19155437E 02	-0.16841402E 02	-0.55251577E 02	0.55794764E 02	0.10780159E 02	0.44117844E 02	0.24242294E 02
0.24272250E 03	0.24272250E 03	0.2427225[illegible]E 03	0.24272250E 03	0.24272250E 03	0.24272250E 03	0.24272250E 03

I = 15

0.16956404E-01	-0.10496195E 02	-0.16165776E 02	-0.91038199E 02	-0.38246004E-00	0.77512328E 00	-0.49129181E-00
-0.45381982E 02	0.30332011E 01	-0.19379468E 01	-0.76975355E 01	0.19389317E 01	-0.76287573E 00	0.19155437E 02
0.76248411E 04	-0.37151951E 01	-0.14597860E 02	-0.18059988E 02	-0.31254197E 02	0.40091724E 02	0.24823984E 02
0.97038041E 06	0.97038041E 06	0.97038041E 06	0.97038041E 06	0.97038041E 06	0.97038041E 06	0.97038041E 06

I = 16

0.55575399E 00	-0.27785755E 03	-0.23941089E 02	-0.90957943E 02	0.11143871E 01	-0.56960335E 00	0.91240181E 00
-0.44313179E 02	0.30979177E 02	0.57297417E 01	-0.26368137E 02	-0.21543707E 01	-0.99457572E 00	-0.16841397E 02
-0.37151923E 01	0.11929357E 05	0.25933747E 02	-0.13626931E 02	-0.32790273E 02	0.50899332E 02	0.33842268E 02
-0.63605[illegible]22E 05	-0.656[illegible]5.22E 05	-0.656[illegible]22E 5	-0.65605022E 05	-0.65605022E 05	-0.65605022E 05	-0.65605022E 05

I = 17

-0.72939636E-02	0.15325226E 02	-0.12971412E 03	-0.58324730E 03	0.10305695E 02	0.83354603E 01	-0.25573398E 01
-0.26275933E 03	0.25379021E 03	0.43624291E 02	-0.11889648E 03	-0.12600395E 02	0.58886221E 01	-0.55251577E 02
-0.14597869E 02	0.25933748E 02	0.13147246E 05	-0.98956255E 02	-0.15850922E 03	0.31172[illegible]10E 03	0.20499054E 03
0.60990874E 04	0.60990874E 04	0.60990874E 04	0.60990874E 04	0.60990874E 04	0.60990874E 04	0.60990874E 04

I = 18

-0.79338942E-01	0.34399146E 02	0.2[illegible]8929066E 02	0.32128924E 03	-0.27604847E 02	-0.48061124E 02	0.33899615E 02
0.15196522E 03	0.10720867E 03	0.12552711E 02	0.67938[illegible]9E 02	0.10512213E 02	-0.90394230E 00	0.55794764E 02
-0.18[illegible]03E 02	-0.13626930E 02	-0.98956255E 02	0.25743[illegible]E 05	0.20703307E 03	-0.18423864E 03	-0.17274685E 03
-0.11545643E 07	-0.11545643E 07	-0.11545643E 07	-0.11545643E 07	-0.11545643E 07	-0.11545643E 07	-0.11545643E 07

-0.59378721E-01	-0.18388561E 02	-0.19298719E 03	0.30359434E 02	0.16800418E 03	0.19437701E 03	0.26560894E 03
-0.30782232E 03	0.18229954E 02	0.14746373E 03	-0.24429851E 03	0.30653398E 04	0.23785624E 06	0.24272250E 03
0.97038041E 06	-0.65605022E 05	0.60990874E 04	-0.11545643E 07	-0.69202647E 06	0.74860854E 06	-0.70763679E 06
0.77688400E 09	0.77688400E 09	0.77688400E 09	0.77688400E 09	0.77688400E 09	0.77688400E 09	0.77688400E 09