GITEES-A588/T3

N65-34405
(ACCESSION NUMBER)
60
(PAGES)
CR 67115
(NASA CR OR TMX OR AD NUMBER)
(THRU)
1
(CODE)
07
(CATEGORY)
FACILITY FORM 602

TECHNICAL NOTE NO. 3

Project No. A-588

GPO PRICE $ _____

CFSTI PRICE(S) $ _____

Hard copy (HC) 3.00

Microfiche (MF) .50

ff 653 July 65

GENERATION AND MEASUREMENT OF NONSTATIONARY RANDOM PROCESSES

By Roger P. Webb

Joseph L. Hammond, Jr.

Richard E. Bryan

Thomas M. White, Jr.

PROPERTY OF
TECHNICAL LIBRARY
MS-IPL

Prepared for
George C. Marshall Space Flight Center
Huntsville, Alabama

Contract No. NAS8-2473

(Development of New Methods and Applications of Analog Computation)

22 July, 1964

1964

Engineering Experiment Station

GEORGIA INSTITUTE OF TECHNOLOGY

Atlanta, Georgia

RG F 2495 "

GEORGIA INSTITUTE OF TECHNOLOGY
Engineering Experiment Station
Atlanta 13, Georgia

GIT/EES Report A588/T3

22 July 1964

GENERATION AND MEASUREMENT OF NONSTATIONARY RANDOM PROCESSES

By
Roger P. Webb
Joseph L. Hammond, Jr.
Richard E. Bryan
Thomas M. White, Jr.

TECHNICAL NOTE NO. 3

on

Contract No. NAS8-2473

(Development of New Methods and
Applications of Analog Computation)

For

GEORGE C. MARSHALL SPACE FLIGHT CENTER
Huntsville, Alabama

CONTENTS

		Page
Title Page		i
List of Illustrations		iii
I.	INTRODUCTION AND SUMMARY	1
II.	SYNTHESIS OF TIME VARYING NETWORKS FOR THE GENERATION OF NONSTATIONARY STOCHASTIC PROCESSES	2
	2.1 Introduction	2
	2.2 Representation of a Stochastic Process	3
	2.3 The Covariance Function	4
	2.4 Selected Topics from the Theory of Ordinary Differential Equations	5
	2.5 The Synthesis Procedure	12
	2.6 Summary and Example	15
III.	MEASUREMENTS ON NONSTATIONARY STOCHASTIC PROCESSES	20
	3.1 Introduction	20
	3.2 Averages	20
	3.3 Computer Instrumentation	21
	3.4 Sampling Errors	25
	3.5 Summary of Results on Sampling Errors	33
	3.6 Computations Performed by the Digital Computer	34
IV.	EXAMPLES	37
	Example 1	37
	Example 2	40
	Example 3	50
V.	CONCLUSIONS	55
References		56

LIST OF ILLUSTRATIONS

Figure		Page
2.1	A Generalized Computer Implementation of Equation (2.11)	11
2.2	Computer Implementation of Example	19
3.1	Generation of Sample Functions for a Nonstationary Random Process	22
3.2	Measuring System	23
3.3	80% Confidence Limits on Fractional Errors	31
3.4	Format for Tabular Presentation of Covariance Estimates	36
4.1	Mean and Standard Deviation as a Function of Time for Example 1. n = 180	38
4.2	Measured and Theoretical Covariance Functions with t=1 for Example 1. n = 180	39
4.3	Mean and Standard Deviation as a Function of time for Example 1. n = 18	41
4.4	Measured and Theoretical Covariance Functions with t=1 for Example 1. n = 18	42
4.5	Implementation of $\mathring{x} + \frac{x}{t} = \frac{y}{t}$	46
4.6	Improved Implementation of $\mathring{x} + \frac{x}{t} = \frac{y}{t}$	46
4.7	Normalized Mean and Standard Deviation as a Function of Time for Example 2. n = 150	48
4.8	Measured and Theoretical Covariance Functions with t=1 for Example 2. n = 150	49
4.9	Implementation of $\mathring{x} + x\left(\frac{1}{t+1}\right) = y\left(\frac{1}{t+1}\right)$	51
4.10	Normalized Mean and Standard Deviation as a Function of Time for Example 3. n = 150	52
4.11	Measured and Theoretical Covariance Functions with t=1 and t=3 for Example 3. n = 150	53

I. INTRODUCTION AND SUMMARY

This Technical Note is concerned with certain aspects of the generation and use of nonstationary stochastic processes in Monte Carlo studies using an analog computer. It represents a continuation and extension of Technical Note 1 of the current project.

Certain aspects of the study are essentially complete. Section II of this Note outlines in detail a general method for the synthesis of analog computer circuits which when excited by stationary Gaussian white noise produce nonstationary random outputs with prescribed first and second statistical moments.

Section III of the Note describes a system for the measurement and processing of the nonstationary random processes. Also included in Section III is an error analysis which gives a confidence level criterion for use with the measured random data.

Section IV presents several examples for which computer circuits are constructed to realize given covariance functions, and for which the moments of the experimentally generated processes are measured. These examples illustrate the use of the synthesis procedure and the analog implementation, and also give an indication of the accuracy which can be achieved in this type of work.

Work is continuing on certain aspects of the analytical representation of random processes and on possible simplifications and extensions of the current results. Plans for the continuation are discussed in Section V of this Note.

II. SYNTHESIS OF TIME VARYING NETWORKS FOR THE GENERATION OF NONSTATIONARY STOCHASTIC PROCESSES

2.1 Introduction

Frequently in analog simulation of physical systems it is necessary to generate stochastic processes. In some cases the generation of stochastic processes is conveniently accomplished by shaping the output of a stationary Gaussian white noise source with an appropriate computer network. The structure of this network is related to the statistical moments of the required process. In case the required process has stationary statistics, the appropriate network transfer function can be obtained by factoring the spectral density function of the process. However, for nonstationary processes the appropriate network must be obtained in a different manner. In the sequel, a technique is presented which will realize any random process, insofar as its first two statistical moments are concerned, as the output of a linear time varying network excited by stationary white noise. The technique involves expanding the covariance function of the given process into a finite series. The series expansion is then used to determine the coefficients of a linear differential equation whose analog realization is the required network. The order of the differential equation, and hence the complexity of the required analog network is directly related to the number of terms in the series expansion. Without loss in generality the technique presented herein is concerned only with the realization of processes with mean zero. Processes with nonzero mean can be realized as the sum of the random process generated by this technique and a deterministic function equal to the required mean.

2.2 Representation of a Stochastic Process

Due to a theorem by Doob [1], it is known that for any random process with given mean and covariance, there exists a Gaussian random process with identical mean and covariance. Consequently if only the first two statistical moments of a stochastic process are of interest, the generation of an appropriate Gaussian process will suffice.

It is also known[1] that any Gaussian random variable x(t) with mean zero can be represented formally by the equation

$$x(t) = \int_0^t G(t,s)y(s)ds \quad . \tag{2.1}$$

For processes with nonzero mean a variable $x^*(t)$ can be defined to obtain

$$x^*(t) = x(t) - m(t) = \int_0^t G(t,s)y(s)ds$$

which is equivalent to Equation (2.1).

In Equation (2.1) y(t) is a stationary Gaussian white noise process and G(t,s) is a Green's function for an appropriate linear differential equation. A procedure for synthesizing a network for producing x(t) from y(t) can be based on Equation (2.1) by noting that this equation represents the solution to an nth order linear differential equation of the form

$$x^{(n)}+p_{n-1}(t)x^{(n-1)}+\ldots+ a_1(t)\dot{x} + a_o(t)x = q_m(t)y^{(m)}+\ldots+ q_i(t)\dot{y} + q_1(t)y$$

[1] Levy [2], Webb [3].

or in shorter notation, $$L_t\, x = N_t\, y \quad . \tag{2.2}$$

This differential equation and hence the realization of the required stochastic process can be obtained by an analog computer realization of Equation (2.2) with a white noise input source. The synthesis of the required network is thus completed by the specification of the coefficients $p_i(t)$, $q_i(t)$. It is convenient for computational purposes to realize Equation (2.2) as n first order differential equations rather than as an nth order equation. This alternate representation and its equivalence to the form of Equation (2.2) will be given in a subsequent section.

2.3 The Covariance Function

The synthesis procedure for the required analog network is developed using certain properties of the covariance function for the required process. It is assumed that this function is known in some form.

The covariance function for the random variable x(t) with mean zero is given by

$$r(t',t) = E[x(t_1)x(t_2)] \tag{2.3}$$

where E is the expectation operation and

$$t' = \text{larger of } (t_1 \text{ and } t_2)$$

$$t = \text{smaller of } (t_1 \text{ and } t_2) \quad .$$

In many cases with physical significance the covariance function can be

expressed as

$$r(t',t) = \sum_{i=1}^{n} \tilde{\Phi}_i(t')\gamma_i(t) \qquad , \tag{2.4}$$

where $\tilde{\Phi}_i(t)$, $\gamma_i(t)$ are known functions of time. If Equation (2.4) does not apply exactly, Mercer's theorem[2] guarantees that any bounded covariance function can be approximated to arbitrary accuracy by such a sum. Since the form of Equation (2.4) is particularly useful in developing the required networks, this representation of the covariance function will be used throughout.

As indicated above, the output of an analog computer network with a white noise input can be expressed by Equation (2.1). A straightforward computation shows that the covariance function of the output of such a network can be expressed as

$$r(t',t) = \int_0^t G(t',s)G(t,s)ds \qquad . \tag{2.5}$$

The procedure for synthesizing the computer network is developed from Equations (2.4) and (2.5), in which $r(t',t)$ is known, by determining the parameters in the differential equation, (of which $G(t,s)$ is the Green's function), by use of the expansion of Equation (2.4).

2.4 Selected Topics from the Theory of Ordinary Differential Equations

This Section summarizes certain topics from differential equation theory and provides further background for the synthesis procedure which will be developed in Section 2.5.

[2] Davenport and Root [4]

Consider a linear n^{th} order differential equation of the form of Equation (2.2). Associated with this equation is the homogeneous differential equation

$$L_t\, x = 0 \qquad . \tag{2.6}$$

This equation has n linearly independent solutions which are denoted by $\phi_1(t), \phi_2(t) \ldots \phi_n(t)$. The linear differential operator L_t can be specified in terms of the ϕ_i's by the relation

$$L_t\, x = W\,(x, \phi_1, \phi_2, \ldots \phi_n)(t) = 0 \tag{2.7}$$

where the Wronskian W is given by

$$W(x, \phi_1 \ldots \phi_n)(t) = \det. \begin{vmatrix} x & \phi_1 \ldots & \phi_n \\ \dot{x} & \dot{\phi}_1 & \dot{\phi}_n \\ \ddot{x} & \ddot{\phi}_1 & \ddot{\phi}_n \\ \vdots & \vdots & \vdots \\ x^{(n)} & \phi_1^{(n)} & \phi_n^{(n)} \end{vmatrix} .$$

In addition, there exists for Equation (2.6) a function H(t,s) which satisfies

$$L_t\, H(t,s) = 0$$

and is defined by

$$H(t,s) = 0, \qquad t<s$$

and

$$H(t,s) = \frac{\det. \begin{vmatrix} \phi_1(s) & \phi_2(s) \ldots & \phi_n(s) \\ \dot{\phi}_1(s) & \dot{\phi}_2(s) \ldots & \dot{\phi}_n(s) \\ \vdots & \vdots & \vdots \\ \phi_1^{(n-2)}(s) & \phi_2^{(n-2)}(s) \ldots & \phi_n^{(n-1)}(s) \\ \phi_1(t) & \phi_2(t) \ldots & \phi_n(t) \end{vmatrix}}{W(\phi_1, \phi_2, \ldots \phi_n)(s)}, \quad t>s \tag{2.8}$$

where

$$W(\phi_1, \phi_2, \ldots \phi_n)(s) = \det. \begin{vmatrix} \phi_1(s) \ldots & \phi_n(s) \\ \dot{\phi}_1(s) \ldots & \dot{\phi}_n(s) \\ \vdots & \vdots \\ \phi_1^{(n-1)}(s) \ldots & \phi_n^{(n-1)}(s) \end{vmatrix}.$$

The nonhomogeneous differential Equation (2.2) with zero initial conditions then has the unique solution

$$x(t) = \int_0^t H(t,s) N_s y(s) ds \tag{2.9}$$

where N_s is the operator defined in Equation (2.2).

Then, using Green's formula[3], Equation (2.9) can be rewritten as

$$x(t) = \int_{o}^{t} G(t,s)y(s)ds, \tag{2.10}$$

where $G(t,s)$ is the Green's function for an equation of the form of Equation (2.2). In network terminology, $G(t,0)$ is the impulse response of a network.

As noted previously, it is convenient for computational purposes to convert the nth order Equation (2.2) into a set of n first order differential equations. It is also convenient to accomplish this in such a manner that no derivatives of the input process are required. To make this conversion the following identifications are made. It is assumed here without loss of generality that $m = n-1$.

$$x(t) = x_1(t)$$

$$\mathring{x}_1 = x_2 - a_{n-1}(t)x_1 + b_m(t)y$$

$$\mathring{x}_2 = x_3 - a_{n-1}(t)x_1 + b_{m-1}(t)y$$

$$\vdots$$

$$\mathring{x}_{n-1} = x_n - a_1(t)x_1 + b_1(t)y$$

$$\mathring{x}_n = -a_o(t)x_1 + b_o(t)y$$

[3] Coddington and Levinson [5] p. 86.

In matrix notation this set can be written more concisely as

$$\dot{\underline{x}} = A(t)\ \underline{x} + B(t)y \tag{2.11}$$

$$x = H\ \underline{x}$$

where $\underline{x} = \begin{bmatrix} x_1 \\ x_2 \\ \circ \\ \circ \\ \circ \\ x_n \end{bmatrix}$ $\quad B = \begin{bmatrix} b_m(t) \\ b_{m-1}(t) \\ \circ \\ \circ \\ \circ \\ b_1(t) \\ b_o(t) \end{bmatrix}$ $\quad H = [1\ 0\ \circ\ \circ\ \circ\ 0]$

$$A(t) = \begin{bmatrix} -a_{n-1}(t) & 1 & 0 & \circ & \circ & \circ & \circ & \circ & \circ & 0 \\ -a_{n-2}(t) & 0 & 1 & 0 & \circ & \circ & \circ & \circ & \circ & 0 \\ \circ & & & & \circ & \circ & & & & \circ \\ \circ & & & & & \circ & \circ & & & \circ \\ \circ & & & & & & \circ & \circ & & \circ \\ \circ & & & & & & & & \circ & 0 \\ -a_1(t) & 0 & \circ & \circ & \circ & \circ & \circ & \circ & \circ & 1 \\ -a_o(t) & 0 & \circ & \circ & \circ & \circ & \circ & \circ & \circ & 0 \end{bmatrix}$$

It can be verified that the elements a_k, b_k, in Equation (2.11) are related to the coefficients p_k, q_k, in Equation (2.2) by

$$p_k = \sum_{j=o}^{n-1-k} \frac{(n-1-j)!}{k!(n-1-j-k)!} \; a_{n-1-j}^{(n-1-j-k)} \tag{2.12}$$

$$q_k = \sum_{j=o}^{m-k} \frac{(m-j)!}{k!(m-j-k)!} \; b_{m-j}^{(m-j-k)} \tag{2.13}$$

If the p_k, q_k are known, Equations (2.12) and (2.13) can be solved sequentially for the a_k, b_k.

Note that Equation (2.11) which is the alternate representation of Equation (2.2) results in the particularly simple analog realization shown in Figure 2.1.

Associated with the vector differential equation (2.11) is the homogeneous equation

$$\dot{\underline{x}} = A(t)\,\underline{x} \tag{2.14}$$

If $\phi_1(t)$, $\phi_2(t)$ . . . $\phi_n(t)$ are again the n linearly independent solutions to Equation (2.6), then there exists for Equation (2.14) a fundamental matrix solution $\Phi(t)$ satisfying

$$\frac{d}{dt}\,\Phi(t) = A(t)\Phi(t).$$

The matrix $\Phi(t)$ is defined by

$$\Phi(t) = \begin{vmatrix} \phi_{11} & \cdots & \phi_{21} & \cdots & \phi_{n1} \\ \phi_{12} & \cdots & \phi_{22} & \cdots & \phi_{n2} \\ \vdots & & & & \\ \phi_{1n} & \cdots & \phi_{2n} & \cdots & \phi_{nn} \end{vmatrix} \tag{2.15}$$

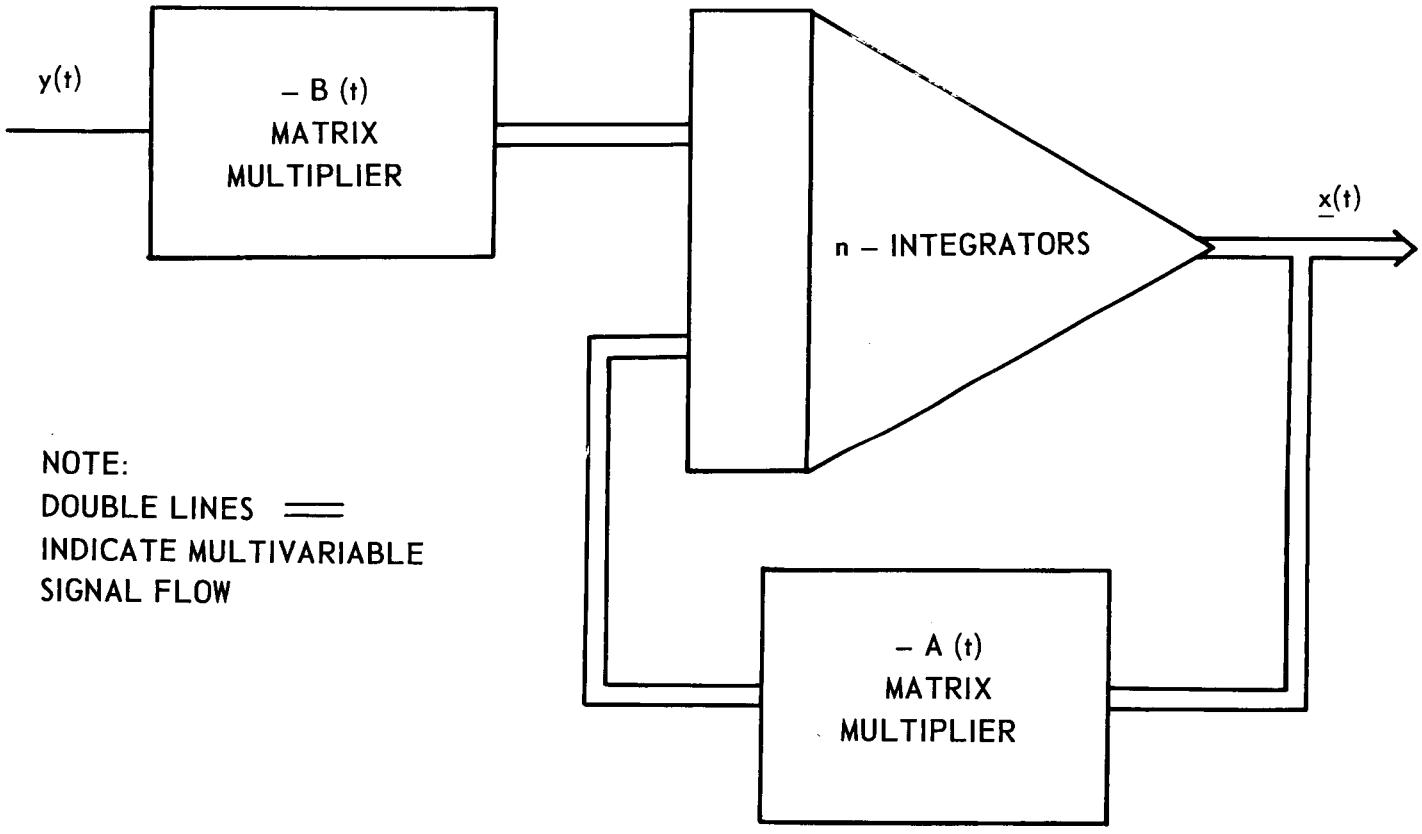

Figure 2.1. A Generalized Computer Implementation of Equation 2.11.

where $$\phi_{ij} = \frac{d}{dt}\phi_{ij-1} + a_{n-j+1}\phi_{i1}$$

and $$\phi_{k1} = \phi_k, \quad (k = 1, \ldots n).$$

The nonhomogeneous differential Equation (2.11) with zero initial conditions then has the unique solution

$$\underline{x}(t) = \int_0^t \Phi(t)\Phi^{-1}(s)B(s)y(s)ds \tag{2.16}$$

where Φ^{-1} is the matrix inverse of Φ.

Again using the properties of white noise a covariance matrix for the vector $\underline{x}(t)$ can be written as

$$R(t',t) = E[\underline{x}(t_1)\underline{x}^T(t_2)] = \int_0^t \Phi(t')\Phi^{-1}(s)B(s)B^T(s)[\Phi^{-1}(s)]^T\Phi^T(t)ds \tag{2.17}$$

where $(\ )^T$ denotes matrix transpose.

2.5 The Synthesis Procedure

With the preceding background it is now possible to outline the synthesis procedure for the required analog network. The procedure requires a specification of the elements a_k and b_k of the representation of Equation (2.11).

Combining Equations (2.4) and (2.5) results in

$$r(t',t) = \int_0^t G(t',s)G(t,s)ds = \sum_{i=1}^{n} \tilde{\phi}_i(t')\gamma_i(t) \quad . \tag{2.18}$$

Then using the fact that $G(t',s)$ satisfies $L_t G(t',s) = 0$ it follows from

applying the operator L_t to both sides of Equation (2.18) that

$$L_{t'} \sum_{i=1}^{n} \tilde{\phi}_i(t')\gamma_i(t) = 0. \tag{2.19}$$

Consequently, the n $\tilde{\phi}_i$ in Equation (2.4) are solutions to the homogeneous Equation (2.6)[4]. Since n linearly independent solutions to Equation (2.6) form a unique basis for all solutions, the $\tilde{\phi}_i$ can be taken as the fundamental set of solutions $\phi_i(t)$ defined in Section 2.4. Consequently, the ~ will be dropped hereafter.

The operator L_t, and hence the coefficients p_k can be obtained using Equation (2.7). The elements a_k of matrix A can then be obtained directly using Equation (2.12). Once the a_k are determined, the matrix $\Phi(t)$ can be written using Equation (2.15). There remains only to determine the elements b_k of B.

Upon identifying a matrix D(t) by

$$D(t) = \int_0^t \Phi^{-1}(s)B(s)B^T(s)[\Phi^{-1}(s)]^T ds \quad , \tag{2.20}$$

the covariance matrix Equation (2.17) can be written as

$$R(t',t) = \Phi(t')D(t)\Phi^T(t). \tag{2.21}$$

The element in the first row and first column of this matrix is just the scalar covariance $r(t',t)$. Consequently, using Equations (2.4) and (2.9)

[4]Note that this assumes that the $\tilde{\phi}_i$ in Equation (2.4) are linearly independent. However, if one of the ϕ_i is not linearly independent, it may be expressed as a combination of the remainder and the index n can be reduced by one.

$$\sum_{i=1}^{n} \phi_i(t')\gamma_i(t) = \sum_{i=1}^{n} \phi_i(t') \sum_{j=1}^{n} d_{ij}(t)\phi_i(t) \tag{2.22}$$

where d_{ij} are elements of matrix D. Equation (2.22) is satisfied by

$$d_{ij}(t) = \frac{\gamma_i(t)}{\phi_i(t)} , \qquad i=j$$

and

$$d_{ij}(t) = 0 , \qquad i \neq j . \tag{2.23}$$

Equation (2.23) determines the matrix D(t) and hence the covariance matrix R (t',t) is known. The elements of B(t) can be determined from the properties of this matrix.

Define by R^* (t',t) the extension of R(t',t) when the sign of the difference $t_1 - t_2$ changes. Then

$$R^*(t',t) = \Phi(t)D(t')\Phi^T(t') = R^T(t,t'). \tag{2.24}$$

Let $\Delta(t',t)$ denote the difference

$$\Delta(t',t) = R - R^* = - \int_t^{t'} \Phi(t_1)\Phi^{-1}(s)B(s)B^T(s)\Phi^{-1T}(s)\Phi^T(t_2)ds. \tag{2.25}$$

Upon taking the partial derivative of Equation (2.25) with respect to t' and evaluating at t' = t there results

$$\left.\frac{\partial\Delta(t',t)}{\partial t'}\right|_{t'=t} = - B(t)B^T(t) \quad . \tag{2.26}$$

Then since the diagonal elements of the matrix BB^T are just the b_k^2, the elements b_k can be evaluated from

$$b_{m-i+1} = \sqrt{-\hat{\delta}_{ii}} \tag{2.27}$$

where $\hat{\delta}_{ii}$ are the diagonal elements of

$$\left.\frac{\partial\Delta(t',t)}{\partial t'}\right|_{t'=t} .$$

The matrix B is then specified completing the synthesis procedure.

2.6 Summary and Example

The synthesis procedure is summarized by the following step-by-step procedure:

1. Express the covariance for the required process in the form of Equation (2.4).
2. Using the ϕ_i in Equation (2.4) determine:
   a) the operator L_t and coefficients $p_k(t)$ by using Equation (2.7).
   b) the elements $a_k(t)$ from Equation (2.12).
   c) the matrix $\Phi(t)$ from Equation (2.15).
3. Determine the elements of matrix D(t) from Equation (2.23).
4. Use Equations (2.21), (2.24), and (2.25) to determine the matrices R, R^*, and Δ.
5. Perform the operation of Equation (2.26) and determine the elements of B(t) by means of Equation (2.27).
6. Realize the resulting differential equation by the circuit shown in Figure 1.

An example will serve to clarify the procedure. Consider the generation of a process with covariance

$$r(t',t) = 4e^{-t'}e^{t} + 2e^{-3t'}e^{3t} \quad .$$

A stationary process has been purposely chosen for clarity. The analytical results of this example can be verified by spectral factorization.

Step 1. The given covariance is $r(t',t) = 4e^{-t'}e^{t} + 2e^{-3t'}e^{3t}$. By inspection the ϕ_i are $\phi_1 = 2e^{-t}$ and $\phi_2 = \sqrt{2}e^{-3t}$

Step 2. The operator $L_t x$ is given by

$$L_t x = \det. \begin{vmatrix} x & 2e^{-t} & \sqrt{2}e^{-3t} \\ \dot{x} & -2e^{-t} & -3\sqrt{2}e^{-3t} \\ \ddot{x} & 2e^{-t} & 9\sqrt{2}e^{-3t} \end{vmatrix} = 0$$

or

$$\ddot{x} + 4\,\dot{x} + 3x = 0.$$

Thus

$$p_1 = 4, \; p_o = 3.$$

Then using Equation (2.12)

$$p_1 = a_1 = 4$$

$$p_o = a_o = 3.$$

Using Equation (2.15)

$$\phi_{11} = 2e^{-t} \qquad \phi_{21} = \sqrt{2}e^{-3t}$$

$$\phi_{12} = -2e^{-t} + 4 \cdot 2e^{-t} \qquad \phi_{22} = -3\sqrt{2}e^{-3t} + 4\sqrt{2}e^{-3t} \; ,$$

so that

$$\Phi(t) = \begin{vmatrix} 2e^{-t} & \sqrt{2}e^{-3t} \\ 6e^{-t} & \sqrt{2}e^{-3t} \end{vmatrix} .$$

Step 3.

$$d_{12} = d_{21} = 0,\ d_{11} = \frac{2e^{t}}{2e^{-t}} = e^{2t},\ d_{22} = \frac{\sqrt{2}e^{3t}}{\sqrt{2}e^{-3t}} = e^{6t} .$$

Step 4.

$$R(t',t) = \begin{vmatrix} 2e^{-t'} & \sqrt{2}e^{-3t'} \\ 6e^{-t'} & \sqrt{2}e^{-3t'} \end{vmatrix} \begin{vmatrix} e^{2t} & 0 \\ 0 & e^{6t} \end{vmatrix} \begin{vmatrix} 2e^{-t} & 6e^{-t} \\ \sqrt{2}e^{-3t} & \sqrt{2}e^{-3t} \end{vmatrix}$$

$$R(t',t) = \begin{vmatrix} 4e^{-(t'-t)} + 2e^{-3(t'-t)} & 12e^{-(t'-t)} + 2e^{-3(t'-t)} \\ 12e^{-(t'-t)} + 2e^{-3(t'-t)} & 36e^{-(t'-t)} + 2e^{-3(t'-t)} \end{vmatrix}$$

and

$$R^{*} = \begin{vmatrix} 4e^{-(t-t')} + 2e^{-3(t-t')} & 12e^{-(t-t')} + 2e^{-3(t-t')} \\ 12e^{-(t-t')} + 2e^{-3(t-t')} & 36e^{-(t-t')} + 2e^{-3(t-t')} \end{vmatrix}$$

and $\Delta(t',t) = R_{\underline{x}} - R^{*}_{\underline{x}}$.

Step 5.

$$-b_1^2(t) = \frac{\partial}{\partial t'} \left[36e^{-(t'-t)} + 2e^{-3(t'-t)} - 36e^{(t'-t)} - 2e^{3(t'-t)}\right]\Bigg|_{t'=t} = -20$$

$$-b_o^2(t) = \frac{\partial}{\partial t'} \left[36e^{-(t'-t)} + 2e^{-3(t'-t)} - 36e^{(t-t')} - 2e^{3(t'-t)}\right]\Bigg|_{t'=t} = -84 .$$

Step 6.

$$A(t) = \begin{bmatrix} -4 & 1 \\ -3 & 0 \end{bmatrix} , \quad B(t) = \begin{bmatrix} 20 \\ 84 \end{bmatrix}$$

The analog computer circuit obtained from Equation (2.11) is shown in Figure 2.2.

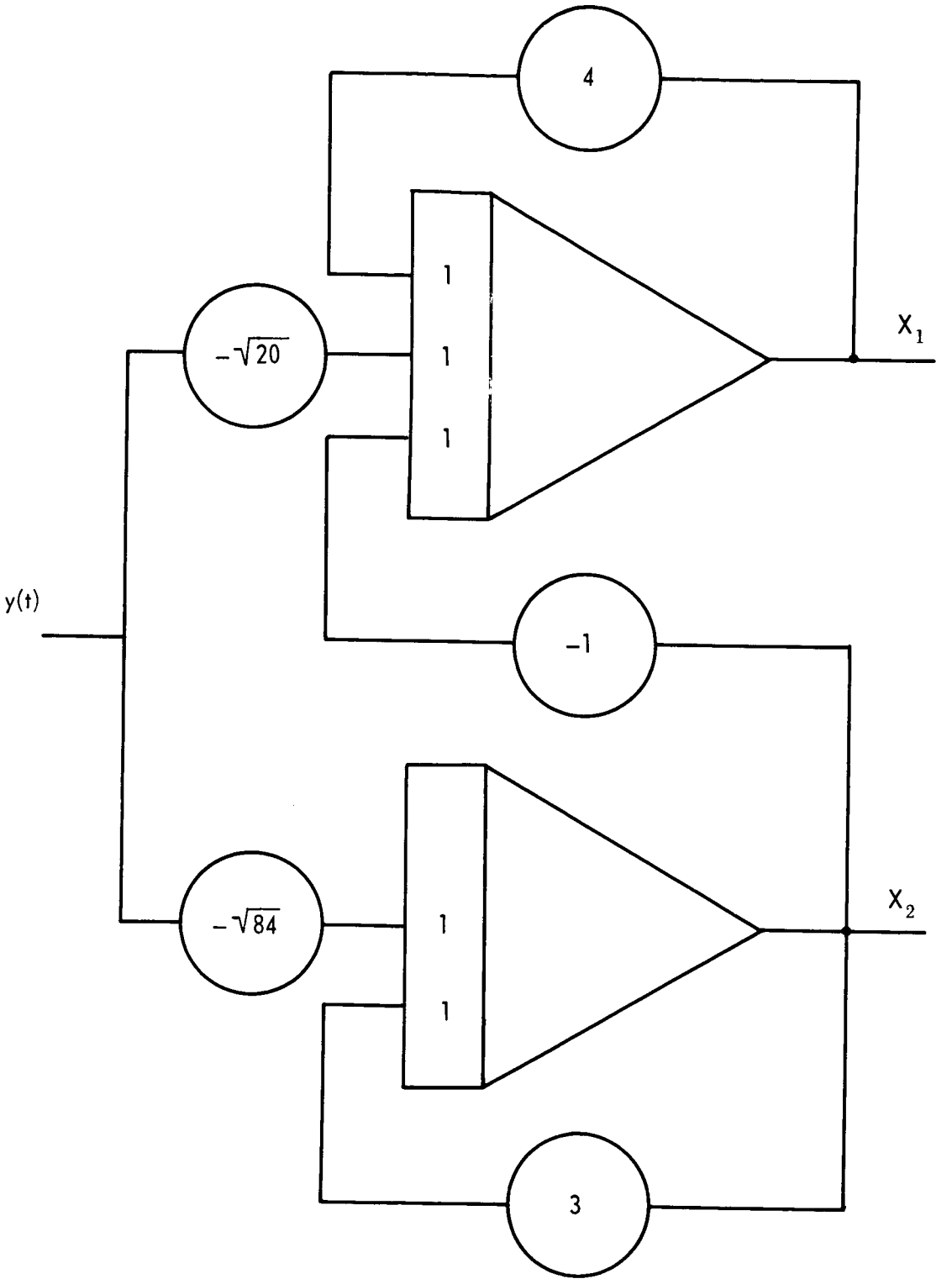

Figure 2.2. Computer Implementation of Example.

III. MEASUREMENTS ON NONSTATIONARY STOCHASTIC PROCESSES

3.1 Introduction

Section II of this Note describes a synthesis procedure for constructing an analog computer circuit which produces from a stationary white noise input a nonstationary output with prescribed first and second moments. This Section will be devoted to a discussion of measurement techniques for estimating the first two moments of nonstationary random processes. The procedures to be described are used in verifying the results of the synthesis procedure, and can also be used in determining the moments of the outputs of simulated systems which are excited by nonstationary random processes.

3.2 Averages

A moment of a random process can be defined as an average over time for a fixed sample function, or as an average over an ensemble of possible sample functions at a fixed time. For processes which are stationary and ergodic, these two methods of averaging yield equivalent results. For nonstationary random processes the two methods of averaging do not in general yield the same results. The question of under what conditions time and ensemble averages are equal is difficult, and this question has received a considerable amount of attention from mathematicians in various ergodic theorems[5]. In the present work with nonstationary processes, time variations in such quantities as the variance and covariance are of central interest. Thus, time averages which obscure these variations cannot be used and ensemble averages are employed.

[5] See for example Doob [1].

An ensemble average, for example $E\, x^n(t)$ which defines the nth moment of $x(t)$, will in general be a function of the time t at which the average is computed. In the physical generation of a nonstationary random process it is desirable to generate a number of different sample functions with a common time reference, rather than a single sample function as might be generated for a stationary process. Values of the various sample functions at fixed values of time with respect to the reference can then be averaged to produce an estimate of the ensemble average.

The considerations involved in the physical generation of many sample functions from a nonstationary process are the following. A filter produced by the synthesis procedure of Section II is in general time variable, and the statistical properties of its output will change in synchronism with its time variable elements. A single sample function, $x_i(t)$, of duration T is thus generated when the time variable elements start at some reference time $t = t_o$ and progress through their prescribed variation to $t = t_o + T$. A number of sample functions can be generated by cycling the time variable elements so that they are first reset to $t = t_o$, and then allowed to progress through their prescribed variations to $t = t_o + T$, at which time they are reset and the process repeated. A block diagram for the equipment required to accomplish this cyclic operation using an analog computer is given in Figure 3-1.

3.3 Computer Instrumentation

The instrumentation chosen to measure the moments of $x(t)$ is shown in Figure 3-2. The Process Source is the analog computer equipment, including the noise generator, required to generate $x(t)$. The Time Reference provides the signals necessary for cyclic operation of the Process Source as described

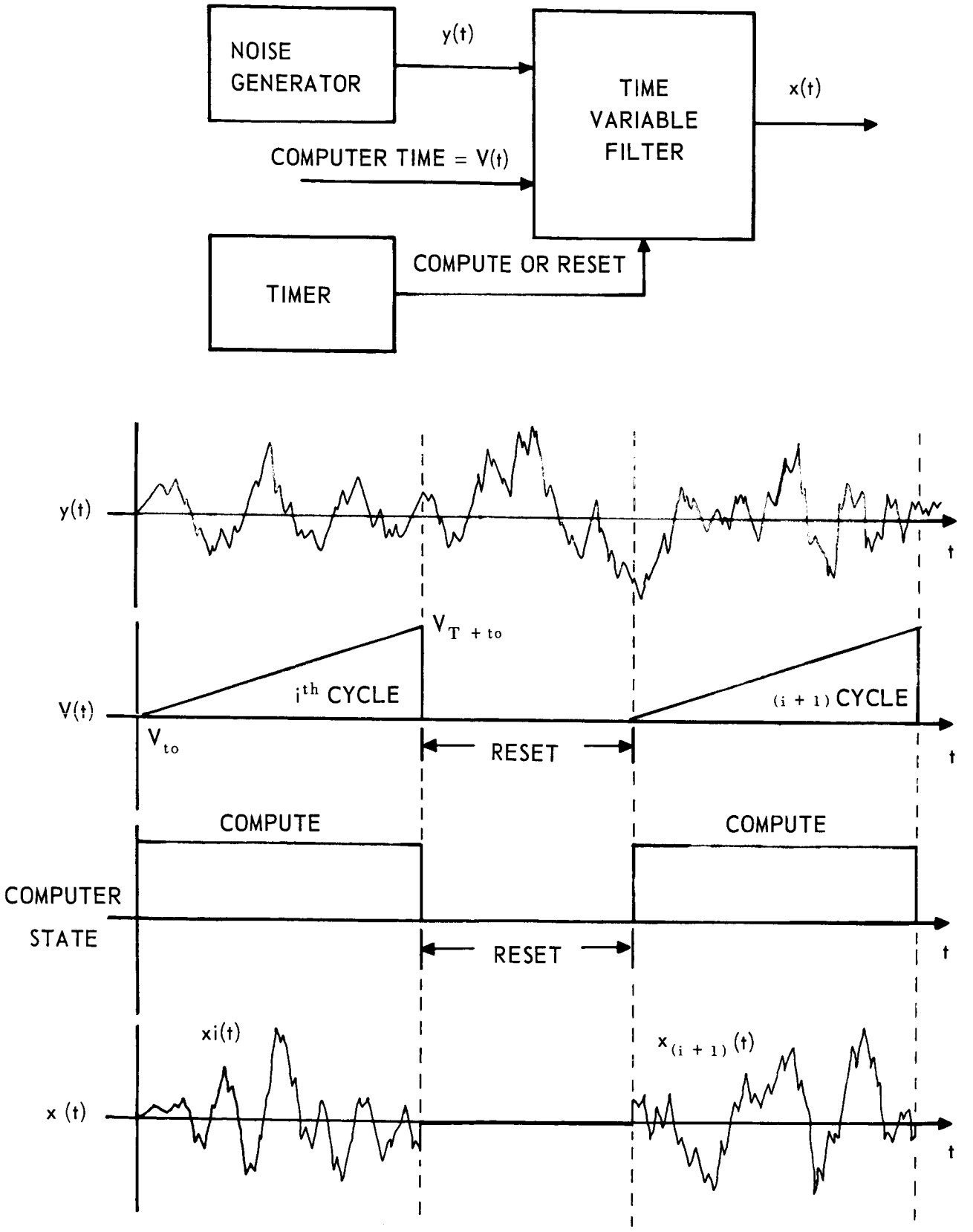

Figure 3-1. Generation of Sample Functions for a Nonstationary Random Process.

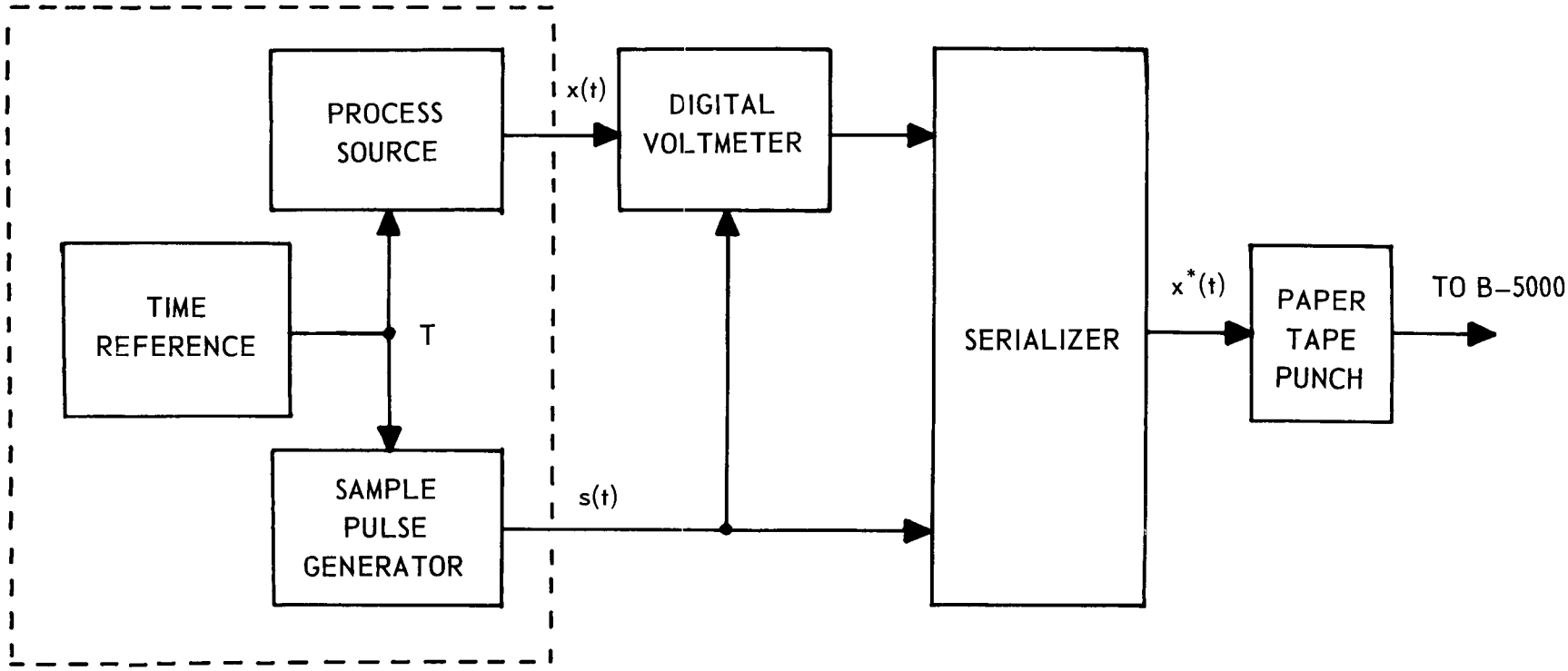

Figure 3-2. Measuring System.

in Section II, and also triggers a Sample Pulse Generator which produces a signal s(t) which synchronizes the Digital Voltmeter and the Serializer. The Digital Voltmeter serves as an analog-to-digital converter, and the Serializer converts the parallel binary output code of the voltmeter to a serial code. The output of the Serializer is a digital signal x*(t) which is punched on paper tape.

The instrumentation of Figure 3-2 accomplishes the following. Sample functions of a nonstationary random process x(t) are produced by the Process Source so that each is started and ended at a fixed time with respect to the time variations of the elements in the Process Source. As each sample function is generated, it is sampled at fixed times by the analog-to-digital converter with a sampling interval α. The analog samples are thus converted to digital form, and the composite of these samples make up the digital signal x*(t) which is recorded on paper tape. The final step in the measurement is to process the paper tape with a general purpose digital computer.

There are three parameters of the measurement system which must be assigned values for each measurement. These are (1) the sampling interval α, (2) the length, T, of each sample function, and (3) the number, n, of sample functions. The sampling interval is chosen by considering the highest frequency component of the signal x(t). In most cases, the smallest possible sampling interval is used and the Process Source is scale factored so that the highest frequency components of x(t) are consistent with this interval. The length T is chosen so that $r(t,t')$ can be estimated over the ranges of t and t' of interest in each particular case. In this regard it should be noted that both t and t' must lie in the interval t_o to $t_o + T$. The third

parameter, n, is chosen to be sufficiently large to give the required statistical accuracy in estimating the moments of x(t). The next paragraph presents a detailed discussion of the factors involved in choosing n.

3.4 Sampling Errors

As discussed in the last paragraph, the final step in the measurement procedure is to process the paper tape containing the data on the output process, x(t), with a general purpose digital computer. The computer is programmed to compute estimates of the first and second moments of the x(t) process as an average over a finite number of data points. This use of an average over a finite number of samples to approximate an ensemble average leads to a sampling error which depends on the number of samples and the distribution function of the true quantity being estimated. It is the purpose of this paragraph to obtain expressions for the magnitude of the sampling error.

For generality let z(t) denote any function of x(t) whose ensemble average is to be estimated. To estimate the first moment of x(t), z(t) would be chosen equal to x(t); to estimate the second moment it would be chosen equal to $x(t)^2$, etc. The paper tape produced by the instrumentation system contains a finite number n of sample functions from the x(t) process and thus a quantity $M_n(t)$ defined as

$$M_n(t) = \frac{1}{n} \sum_{i=1}^{n} z_i(t) \tag{3.1}$$

can be computed from the data on the tape and used as an estimate of the ensemble average z(t). The statistical properties of $M_n(t)$ are determined by the statistical properties of z(t) and the number n.

A quantity of interest is the error, ε_M, between $M_n(t)$ and $E\ z(t)$ expressed as

$$\varepsilon_M = M_n(t) - E\ z(t). \tag{3.2}$$

This error is a random variable and in some cases it is possible to determine its distribution function. In other cases it is not possible to determine the distribution function, and in such cases the first two moments of ε_M, defined as

$$E\varepsilon_M = EM_n(t) - E\ z(t) \tag{3.3}$$

and

$$E\varepsilon_M^{\ 2} = \bar{\varepsilon}_M^{\ 2} = E\ \{\ M_n(t) - E\ z(t)\}^{\ 2}, \tag{3.4}$$

are adequate to give bounds on the sampling error. The first moment of ε_M is frequently referred to as the bias error[6], and since

$$EM_n(t) = \frac{1}{n} \sum_{i=1}^{n} E\ z_i(t) = E\ z(t), \tag{3.5}$$

this error is zero. The second moment of ε_M is called the mean square error. This error is frequently normalized to obtain the relative error, B^2, defined as[7]

[6] See for example Cramér [6] p. 351.

[7] See for example Middleton [7] p. 681.

$$B^2 = \frac{\overline{\varepsilon}_M^{\,2}}{(EM_n)^2} = \frac{\overline{\varepsilon}_M^{\,2}}{[E\ z(t)]^2} \quad . \tag{3.6}$$

Most experiments result in a single evaluation of $M_n(t)$, and thus a single realization of the random variable ε_M. The most positive statement that can be made concerning a single sample of a random variable which can take on any value in a given range is the following: "With probability p, ε_M lies in the interval (a,b)". The probability p is often referred to as a confidence probability and typical choices of p lie in the range 0.8 to 0.99.

If the distribution function of ε_M is known, the probability

$$P\ \{\ a \leq \varepsilon_M \leq b\ \} = p(a,b) \tag{3.7}$$

can be evaluated and, as indicated by the notation, p(a,b), will be a function of a and b. If the bias error is zero and only $\overline{\varepsilon}_M^{\,2}$ is known, then use can be made of a modified form of Tchebycheff's inequality[8] to bound the probability that ε_M is in a given range as expressed by

$$P\ \{\ |\varepsilon_m| < C[\overline{\varepsilon}_M^{\,2}]^{1/2}\ \} > 1 - 1/C^2 \ . \tag{3.8}$$

This is equivalent to a statement of the form: "With confidence probability greater than $1 - 1/C^2$, a single determination of ε_M yields a value whose magnitude is less than $C[\overline{\varepsilon}_M^{\,2}]^{1/2}$."

[8] See for example Hammond [8].

The mean square error $\bar{\varepsilon}_M^{\,2}$ can be expressed in terms of n and the variance of z(t) for any distribution function of z(t) as follows. From the definition of $M_n(t)$,

$$\bar{\varepsilon}_M^{\,2} = \frac{1}{n^2} \sum_{i=1}^{n} \sum_{j=1}^{n} E[z_i(t)\ z_j(t)] - [E\ z(t)]^2. \tag{3.9}$$

In most cases of importance the values of $z_i(t)$ and $z_j(t)$ from the ith and j^{th} sample functions of z(t) will be statistically independent so that

$$E\ z_i(t) z_j(t) = E\ z_i(t)\ E\ z_j(t) = [E\ z(t)]^2,\ i \neq j.$$

Thus

$$\bar{\varepsilon}_M^{\,2} = \frac{E\ z^2(t)}{n} - \frac{[E\ z(t)]^2}{n} \quad . \tag{3.10}$$

But

$E\ z^2(t) - [E\ z(t)]^2$ is the variance, $\sigma_z^{\,2}$, of z(t). Thus,

$$\bar{\varepsilon}_M^{\,2} = \sigma_z^{\,2}/n \quad , \tag{3.11}$$

and B^2 is given by

$$B^2 = \frac{\sigma_z^{\,2}}{n[E\ z(t)]^2} \quad . \tag{3.12}$$

Much more specific results can be obtained for the case of primary interest in this Note; namely, the case where x(t) is a Gaussian random variable. Estimates of the mean, the variance, and the covariance of x(t) will now be considered in turn with the three errors denoted respectively by ε_m, ε_σ, and ε_r.

<u>Mean of x(t):</u> In this case z(t) is chosen to be equal to x(t) so that $M_n(t)$ is given by

$$M_n(t) = \frac{1}{n} \sum_{i=1}^{n} x_i(t) = m(t), \tag{3.13}$$

and ε_m by

$$\varepsilon_m = \frac{1}{n} \sum_{i=1}^{n} x_i(t) - E\, x_i(t) \quad . \tag{3.14}$$

The moments of ε_m are thus given by

$$E\varepsilon_m = 0 \tag{3.15}$$

and

$$E\varepsilon_m^{\,2} = \overline{\varepsilon}_m^{\,2} = \frac{\sigma_x^{\,2}}{n} \quad . \tag{3.16}$$

Since x(t) is a Gaussian random variable, it follows that $x_i(t) - E\, x_i(t)$ and ε_m are also Gaussian random variables. Specifically ε_m is Gaussian with mean zero and variance $\sigma_x^{\,2}/n$. From tabulated values of the Gaussian distribution function, bounds on ε_m with a given confidence probability can be obtained.

For example, with probability 0.8, ε_m lies between $\pm 1.3\sigma_x/\sqrt{n}$. The 80% confidence limits on ε_m/σ_x are plotted versus n in Figure 3.3.

<u>Variance of x(t):</u> To estimate the variance and covariance, z(t) is chosen as $[x_i(t) - m(t)]\ [x_i(t') - m_i(t')]$ so that

$$M_n(t',t) = \frac{1}{n} \sum_{i=1}^{n} [x_i(t) - m(t)]\ [x_i(t') - m(t')]. \tag{3.17}$$

The expected value of $M_n(t',t)$ is then $r(t',t)$ so that $M_n(t',t)$ is an unbiased estimate of the covariance. The error, ε_r, is defined as

$$\varepsilon_r = M_n(t',t) - r(t',t) \tag{3.18}$$

and this quantity can be expressed as

$$\varepsilon_r = \frac{1}{n} \sum_{i=1}^{n} [x_i(t') - m(t')]\ [x_i(t) - m(t)] - r(t',t) \quad . \tag{3.19}$$

Tractable results for the statistical properties of the sampling error can be obtained when $M_n(t)$ is an estimate of the variance of x(t). In this case the error is denoted ε_σ, and it can be expressed as

$$\varepsilon_\sigma = \frac{1}{n} \sum_{i=1}^{n} [x_i(t) - m(t)]^2 - \sigma_x^{\ 2} \ . \tag{3.20}$$

The random variable $x_i(t) - m(t)$ is Gaussian with mean zero and variance $\sigma_x^{\ 2}$. The variable ξ defined as

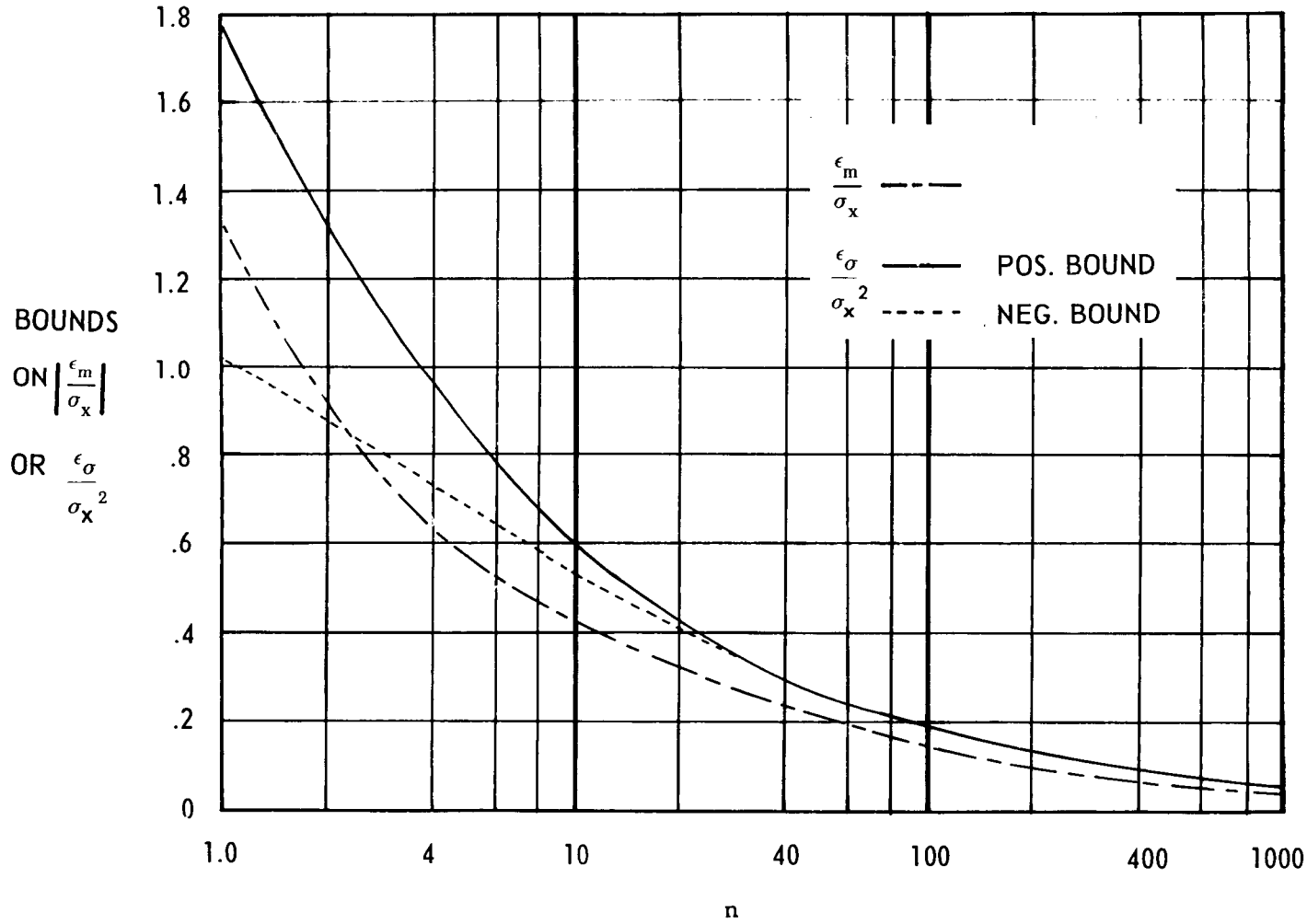

Figure 3-3. 80% Confidence Limits on Fractional Errors.

$$\xi = \frac{n(\varepsilon_\sigma + \sigma_x^2)}{\sigma_x^2} = \sum_{i=1}^{n} \left[\frac{x_i(t) - m(t)}{\sigma_x} \right]^2 , \tag{3.21}$$

is then distributed according to a chi-squared distribution[9] with n degrees of freedom.

From the known properties of the chi-squared distribution

$$E\xi = n. \tag{3.22}$$

and

$$E(\xi - n)^2 = 2n. \tag{3.23}$$

Thus

$$E \left\{ \frac{n(\varepsilon_\sigma + \sigma_x^2)}{\sigma_x^2} - n \right\}^2 = 2n, \tag{3.24}$$

from which it follows that

$$E\, \varepsilon_\sigma^2 = \frac{2\sigma_x^4}{n} , \tag{3.25}$$

and

$$B_\sigma^2 = \frac{2\sigma_x^4}{n\sigma_x^4} = \frac{2}{n} . \tag{3.26}$$

[9] See for example Cramér [6] p. 234.

The expected value of ε_σ is known to be zero from previous calculations and this can be verified from Equations (3.21) and (3.22).

The chi-squared distribution is tabulated so that p(a,b) in Equation (3.7) can be computed as a function of a and b. One form the results can take is given in Figure 3-3 which gives a plot of a positive and a negative bound on $\varepsilon_\sigma/\sigma_x^2$ versus n for a confidence probability of 0.8.

3.5 Summary of Results on Sampling Errors

As indicated in the development above, the curves of Figure 3-3 give bounds which apply with 80% confidence to the errors in estimating the mean or the variance of a Gaussian random variable. Specifically the dashed curve of Figure 3-3 gives a bound on the magnitude of the variable ε_m/σ_x as a function of n, the number of samples used to estimate the ensemble average. As an example of the use of this curve, consider determining bounds on the sampling error in using 100 samples to approximate the ensemble mean of a Gaussian variable with a standard deviation of 2.0. Use of the curve gives a bound of 0.15 on $\left|\varepsilon_m/\sigma_x\right|$ for n = 100. Thus ε_m will lie in the interval (-0.3, + 0.3) with probability 0.8. Said in another way, with 80% confidence probability the measured mean differs in magnitude from the true mean by no more than 0.3.

The solid and dotted curves of Figure 3-3 give respectively the positive and negative bounds on the variable $\varepsilon_\sigma/\sigma_x^2$ as a function of n. As an example of the use of these curves, consider the estimation of the variance of a Gaussian random variable by the use of either 10 samples or 400 samples. For 10 samples the curves show that the error $\varepsilon_\sigma/\sigma_x^2$ lies in the interval (-0.55, 0.6) with confidence probability 0.8. The range for n = 400 is (-0.09, 0.09). Stated in

another way, with probability 0.8 the measured value of the variance lies between 0.45 and 1.6 times the true value. The corresponding range for n = 400 is 0.91 to 1.09 times the true value.

The standard deviation in the two cases would lie between $\sqrt{.45}$ and $\sqrt{1.6}$ times the true value for n = 10, and between $\sqrt{.91}$ and $\sqrt{1.09}$ times the true value for n = 400.

3.6 Computations Performed by the Digital Computer

As discussed in Section III and indicated in Figure 3-2, the final step in any given measurement is to process the signal $x^*(t)$ recorded on paper tape with a general purpose digital computer. The signal $x^*(t)$ consists of samples taken from various sample functions of the x(t) process at various times determined by the sampling interval. Thus, assuming no errors in the analog-to-digital conversion, $x^*(t)$ consists of the numbers

$$\begin{array}{l} x_1(t_o),\ x_1(t_1),\ x_1(t_2),\ \ldots\ x_1(T) \\ \vdots \\ x_i(t_o),\ x_i(t_1),\ x_i(t_2),\ \ldots\ x_i(T) \\ \vdots \\ x_n(t_o),\ x_n(t_1),\ x_n(t_2),\ \ldots\ x_n(T)\ . \end{array}$$

The computer is programmed to compute estimates of the mean, the variance, and the covariance of x(t) defined respectively as follows

$$\hat{m}_x(t_v) = \frac{1}{n} \sum_{i=1}^{n} x_i(t_v), \tag{3.27}$$

$$\hat{\sigma}_x^{\,2}(t_v) = \frac{1}{n} \sum_{i=1}^{n} x_i^{\,2}(t_v) - \hat{m}_x^{\,2}(t_v), \tag{3.28}$$

and

$$\hat{r}(t_u, t_v) = \frac{1}{n} \sum_{i=1}^{n} x_i(t_u)\, x_i(t_v) \quad . \tag{3.29}$$

Note that $\hat{r}(t_u, t_v)$ is an estimate of the true covariance plus $\hat{m}_x(t_u)\hat{m}_x(t_v)$. In all cases discussed in this Note, the mean of x(t) was adjusted to be as nearly zero as possible. Thus, the experimental results in all cases show that $\hat{m}_x(t_u)\hat{m}_x(t_v)$ is small with respect to statistical fluctuations, and $\hat{r}\ (t_u, t_v)$ is used directly as an estimate of the covariance function unless otherwise indicated. Figure 3-4 shows the format used for tabular presentation of the covariance estimates.

$t \backslash t'$	0	1	2		m
0	$\hat{r}(t_0, t_0)$	$\hat{r}(t_0, t_1)$	$\hat{r}(t_0, t_2)$		$\hat{r}(t_0, T)$
1		$\hat{r}(t_1, t_1)$	$\hat{r}(t_1, t_2)$		
2			$\hat{r}(t_2, t_2)$		
m					$\hat{r}(T, T)$

Figure 3-4. Format for Tabular Presentation of Covariance Estimates.

IV. EXAMPLES

Example 1.

This example illustrates the use of the measuring system in experimentally determining the mean, standard deviation, and covariance function of a stationary process generated to have a prescribed covariance by passing white noise through a filter designed by the method described in Section II. The covariance chosen for this example is given by

$$r(t',t) = K_1[1 + 2\ (t'-t)\ e^{-2(t'-t)}]. \tag{4.1}$$

A similar filter is designed in detail as an example in paragraph 2.6 of Section II so design details are omitted here. Application of the six step procedure of paragraph 2.6, Section II leads to a differential equation describing the analog network, or what is more convenient here to a transfer function of the form

$$H(j\omega) = K_2\ \left(\frac{1}{j\omega+2}\right)^2 \quad . \tag{4.2}$$

Note that since this process is stationary spectral factorization can be used to obtain the same result. The differential equation or the transfer function of Equation (4.2) can be implemented on the computer in a straightforward way.

The measured values of the mean and the standard deviation of the output process are shown in Figure 4.1. The mean and the standard deviation fit reasonably within the 80% confidence level error boundaries (shown in dashed lines) computed in Section III. Figure 4.2 shows the theoretical

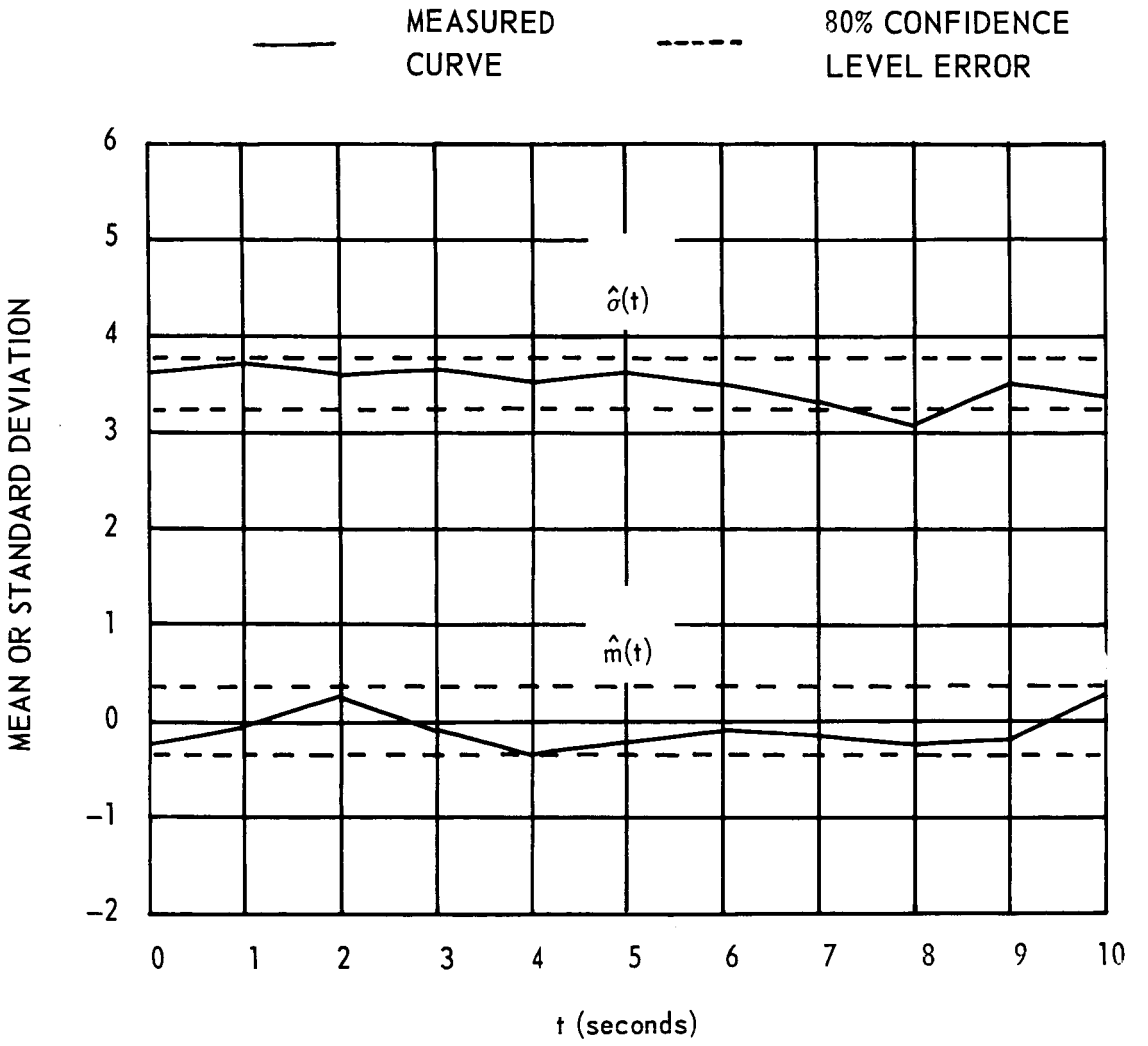

Figure 4-1. Mean and Standard Deviation as a Function of Time for Example 1. n = 180.

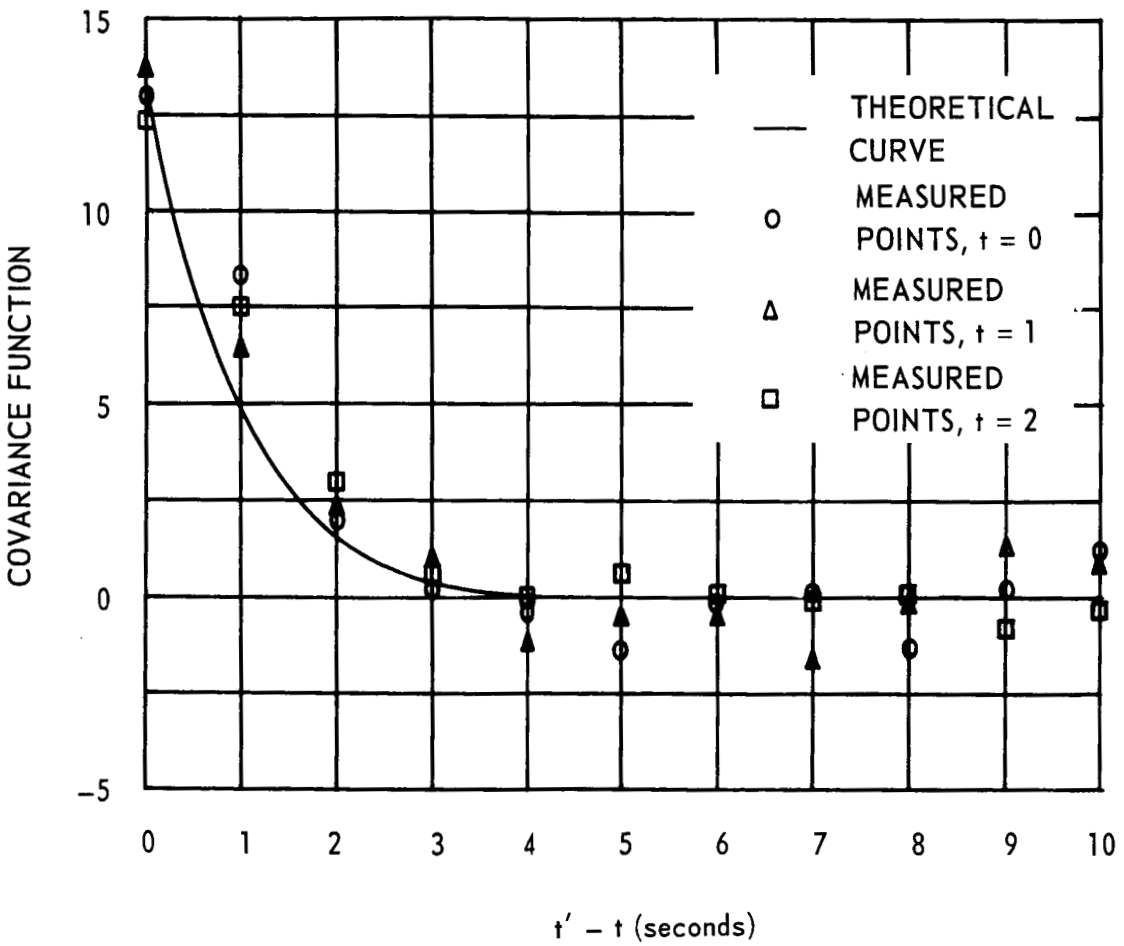

Figure 4-2. Measured and Theoretical Covariance Functions with t=1 for Example 1. n = 180.

covariance curve of Equation (4.1) along with several curves calculated from the measured data for different values of time. Note that the measured covariance curves differ from the theoretical covariance curve by approximately the same amount that the measured and theoretical standard deviation curves differ. Measured data, after being processed by the digital computer is presented in the tabular format described by Figure 3.4 in Section III. Data for each calculated curve is obtained by fixing t at some value, say $t = t_0$, and plotting the discrete points representing $\hat{r}(t,t')$ as a function of $t'-t$ for the fixed value of t. Since the process is stationary, $\hat{r}(t',t)$ is a function of $t'-t$ only and the points representing $r(t',t)$ should fall on the theoretical curve of Equation (4.1) independent of the particular value of t chosen.

The error to be expected from the measuring system depends on the parameter values α and n defined in paragraph 3.3 of Section III. The results of Figures 4.1 and 4.2 were obtained with $\alpha = 1$ second and $n = 180$. A measurement with $\alpha = 1$ second and $n = 18$ leads to the results given in Figures 4.3 and 4.4. These results, as expected, have a much larger statistical fluctuation than the curves for $n = 180$; however, the 80% confidence limit error boundaries are still indicative of the errors encountered.

Example 2

This example illustrates the synthesis procedure for deriving a time varying filter which with a white noise input delivers an output with a prescribed nonstationary second moment, and also demonstrates the use of the measuring system in ascertaining that the output has the desired second moment.

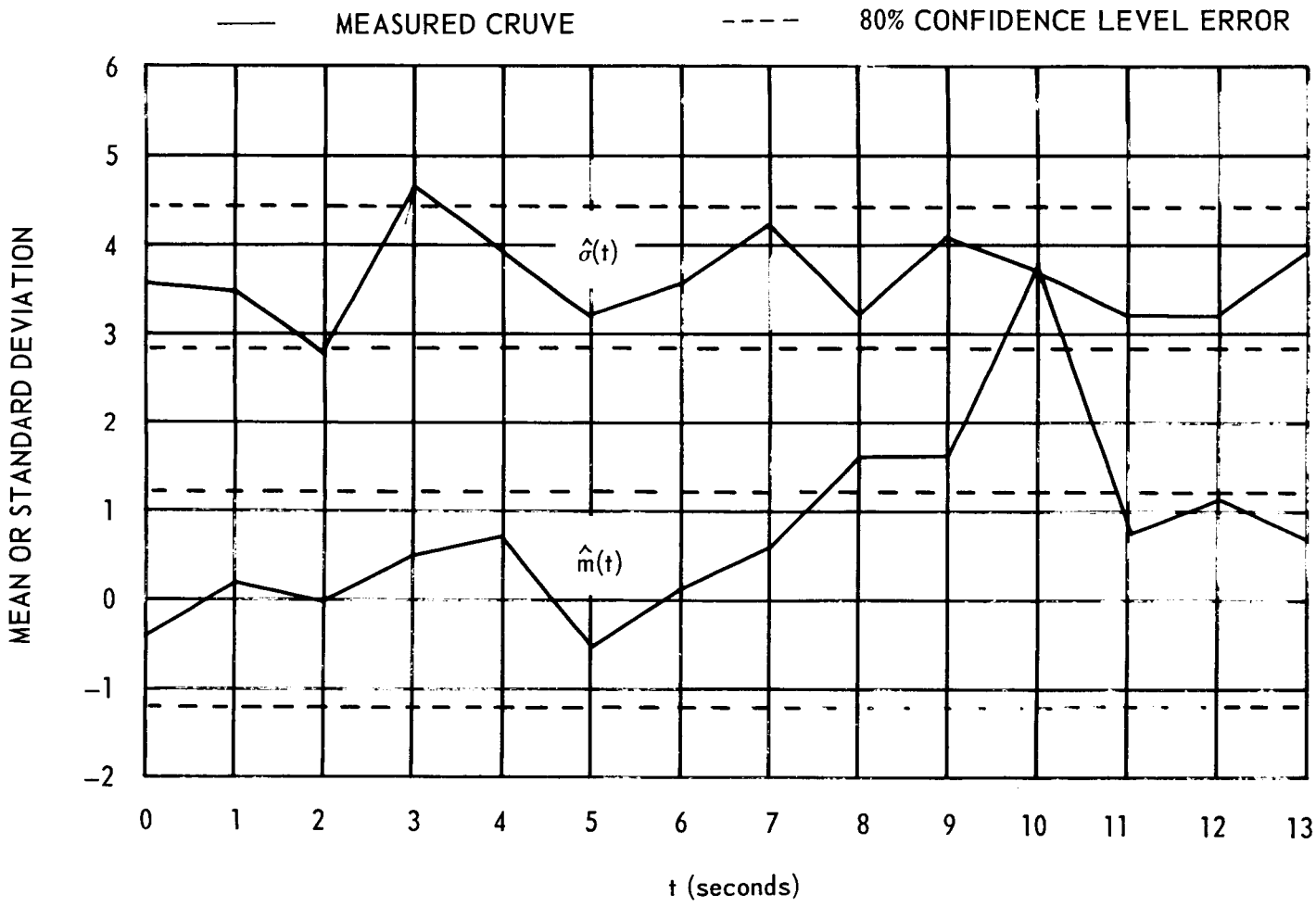

Figure 4-3. Mean and Standard Deviation as a Function of Time for Example 1. n = 18.

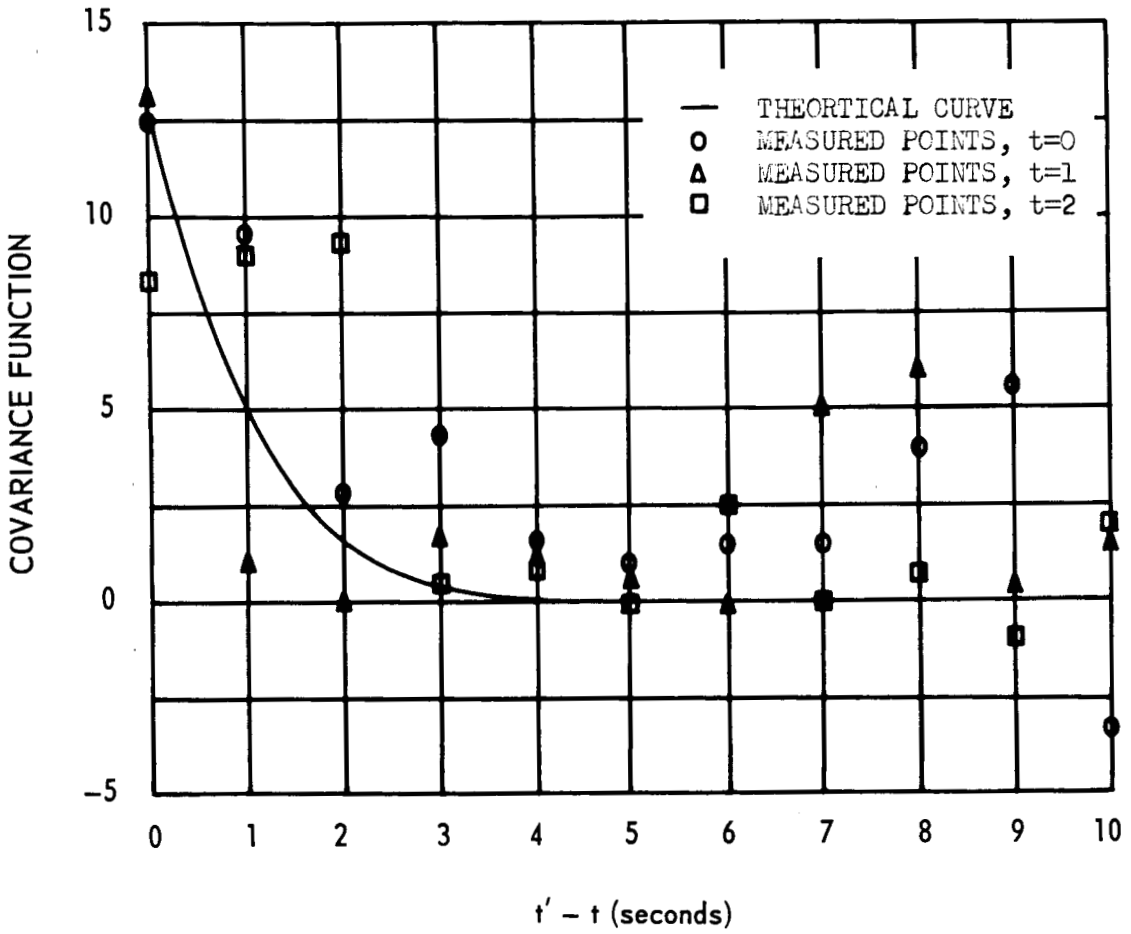

Figure 4-4. Measured and Theoretical Covariance Functions with t=1 for Example 1. n = 18.

The covariance function to be generated in this example is given by

$$r\ (t',t) = \frac{1}{t'} \qquad . \tag{4.3}$$

The filter design is carried out by following the six step procedure of paragraph 2.6 of Section II.

1. A comparison of Equation (4.3) with Equation (2.4) yields the result

$$\phi_1 = \frac{1}{t}\ ,\ \gamma_1 = 1,$$

$$\phi_i = \gamma_i = 0\ ,\ i \neq 1\ . \tag{4.4}$$

2. (a) Equation (2.7) is used to give

$$L_t x = \begin{vmatrix} x & \frac{1}{t} \\ \mathring{x} & -\frac{1}{t^2} \end{vmatrix} = 0 = \qquad -\ (\mathring{x}/t + x/t^2)$$

which simplifies to

$$\mathring{x} + \frac{1}{t}\, x = 0. \tag{4.5}$$

(b) $a_o(t) = p_o(t)$ from Equation (2.12), and

(c) $\Phi(t) = \phi_1(t) = \phi_{11}(t)$ from Equation (2.15).

3. Equation (2.23) gives the result

$$D = d_{11} = \frac{1}{\frac{1}{t}} = t. \tag{4.6}$$

4. Equations (2.21), (2.24), and (2.25) determine

$$R = \Phi(t')D(t)\Phi^T(t) = \frac{1}{t'}\, t\, \frac{1}{t} = \frac{1}{t'} \quad , \tag{4.7}$$

$$R^* = \frac{1}{t} \quad , \tag{4.8}$$

and

$$\Delta = \frac{1}{t'} - \frac{1}{t} \quad . \tag{4.9}$$

5. Use of Equations (2.26) and (2.27) allows the calculation of b_o as

$$\left.\frac{\partial \Delta}{\partial t'}\right|_{t'=t} = -\frac{1}{t^2} = -b_o^{\,2}$$

or

$$b_o = \frac{1}{t} \quad . \tag{4.10}$$

6. The resultant differential equation is given by

$$\mathring{x} + \frac{1}{t}\, x = \frac{1}{t}\, y \quad , \tag{4.11}$$

where y is the white noise input and x is the desired nonstationary output process with covariance $r(t', t) = \frac{1}{t}$.

The synthesis procedure is complete at this point and the remaining discussion concerns implementing the filter on the analog computer and measuring the moments of the generated process.

A straightforward implementation of Equation (4.11) is shown in Figure 4.5. Since $\frac{1}{t}$ is unbounded at t=o, the solution must start at some t greater than zero, and $t_o = 1$ was chosen in this case. In the circuit of Figure 4.5, x(t=1) is the required integrator initial condition. Since x(t=1) is a random variable proportional to $\int_o^1 y dt$, it is difficult to apply this initial condition. To circumvent this difficulty it was convenient to implement the computer circuit as shown in Figure 4.6 rather than in the form of Figure 4.5.

The computer diagram of Figure 4.6 is derived by making the substitution x = uv in

$$\dot{x} + \frac{x}{t} = \frac{y}{t} \tag{4.11}$$

which gives

$$u \left(\frac{dv}{dt} + \frac{v}{t}\right) + \left(v \frac{du}{dt} - \frac{y}{t}\right) = 0. \tag{4.12}$$

Each part of Equation (4.12) is solved separately to give

$$v = \frac{1}{t} \tag{4.13}$$

and

$$u = \int y dt + c. \tag{4.14}$$

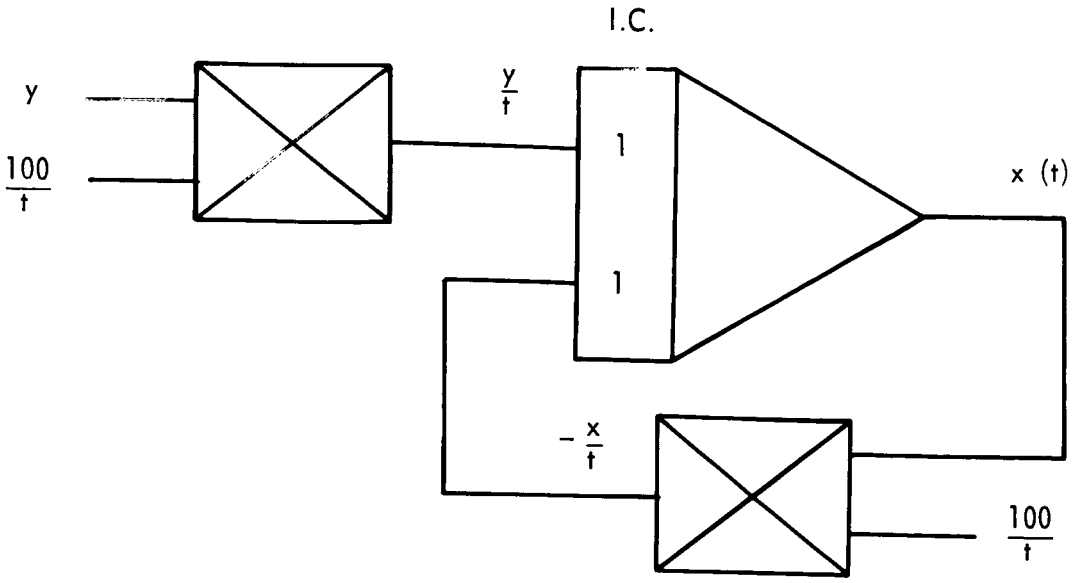

Figure 4.5. Implementation of $\dot{x} + \frac{x}{t} = \frac{y}{t}$.

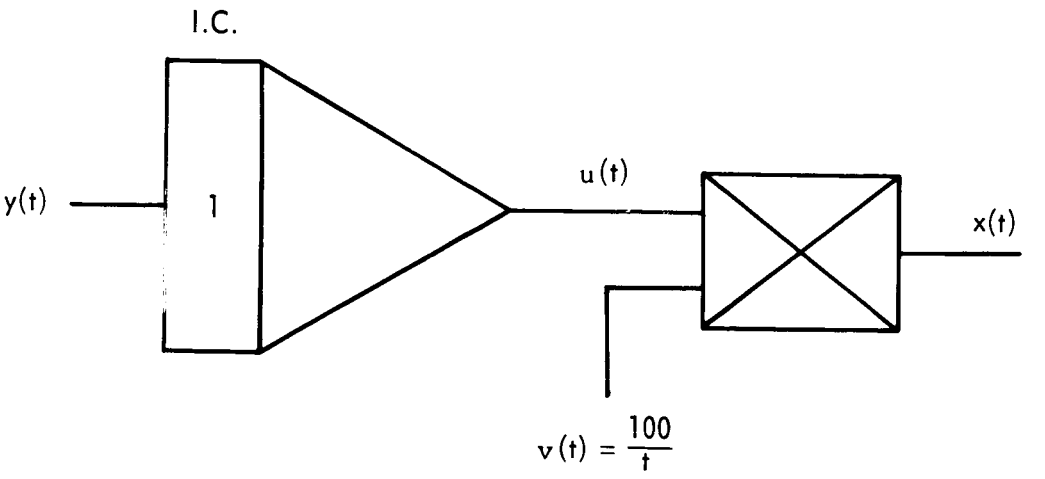

Figure 4.6. Improved Implementation of $\dot{x} + \frac{x}{t} = \frac{y}{t}$.

In the circuit of Figure 4.6 v is held constant at 100V. over the first second while the integrator starts at t=o with an initial condition of 0. This sets c=o and produces $u = \int_o^1 y dt$ as the integrator output voltage at t=1. The final output, x = uv, is thus correct for the interval $1 \leq t \leq 10$.

The measuring system described in Section III, paragraph 3.3 when used to measure the output process x(t) simulated on the analog computer in the manner shown in Figure 4.6, gives the results shown in Figures 4.7 and 4.8. Figure 4.7 shows the mean and the process standard deviation about the mean. The theoretical value of the mean is zero and the theoretical curve for the standard deviation is obtained from

$$\sigma(t) = Kr(t',t)\Big|_{t'=t}$$

$$= Kr(t,t)$$

$$= \frac{K}{t} \quad , \tag{4.15}$$

where K is the power spectral density of the white noise. The 80% confidence level is indicated about the theoretical curve by the dashed lines. Note that the measured points check very well with respect to the expected error limits. Figure 4.8 shows the covariance function, r(t',t), as a function of t'-t with t=1. The theoretical curve is calculated from

$$r(t',t) = \frac{1}{t'} \quad .$$

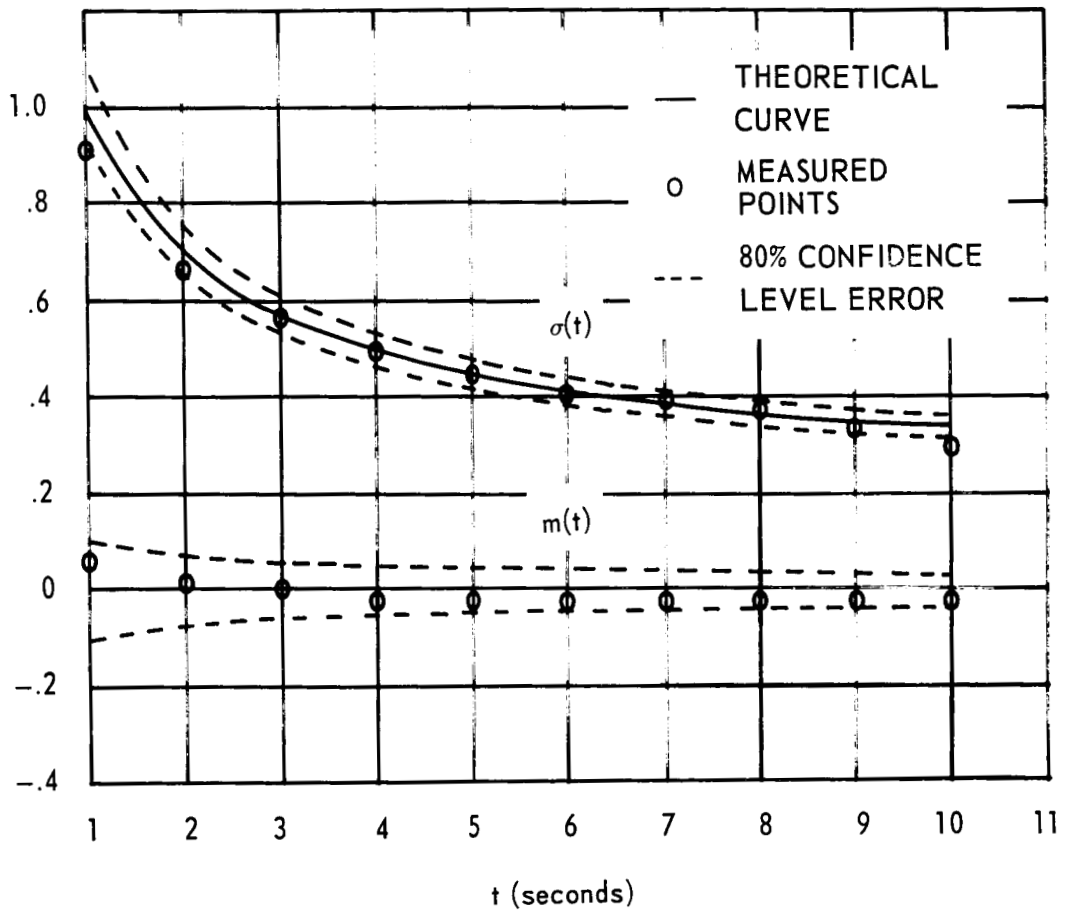

Figure 4-7. Normalized Mean and Standard Deviation as a Function of Time for Example 2. n = 150.

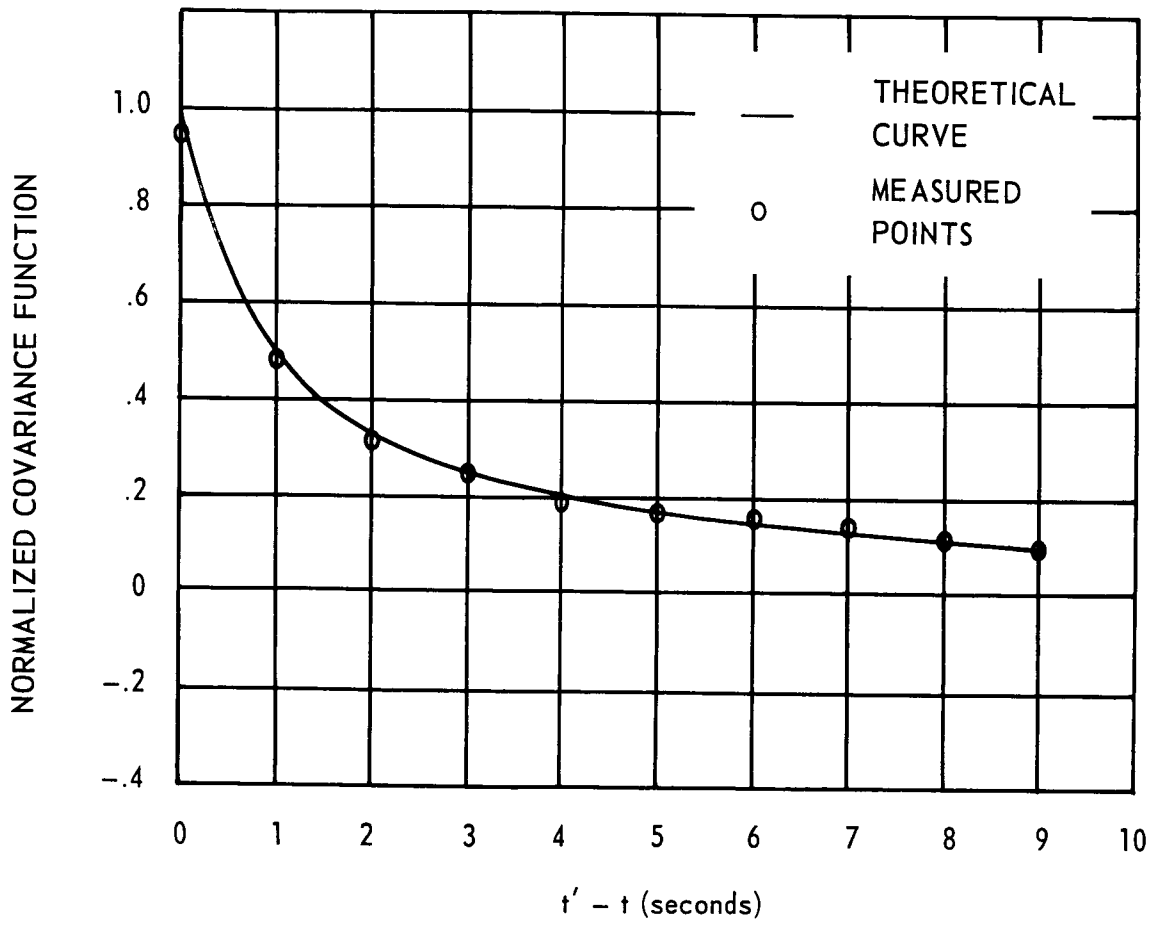

Figure 4-8. Measured and Theoretical Covariance Functions with t=1 for Example 2. n = 150.

Note that the points produced by the measuring system follow the theoretical curve with an error about the same as that observed in the standard deviation measurement.

Example 3

The third example realizes a more complicated covariance function of the form

$$r(t', t) = \frac{t}{(t' + 1)(t + 1)} \quad . \tag{4.16}$$

The theoretical equation for the standard deviation is given by

$$\sigma(t) = \frac{\sqrt{t}}{t+1} \quad . \tag{4.17}$$

Application of the synthesis procedure leads to

$$\mathring{x} + x\left(\frac{1}{t+1}\right) = y\left(\frac{1}{t+1}\right) \tag{4.18}$$

as the defining equation of the desired filter. This equation is implemented in a straightforward manner by the computer diagram of Figure 4.9.

The measuring system, when used to measure the ouptut process x(t) generated as shown in Figure 4.9, gives the results shown by the dots in Figures 4.10 and 4.11. Figure 4.10 shows the mean, whose theoretical value is zero, and the standard deviation about the mean for which the theoretical curve is given by Equation (4.17). The 80% confidence level error is indicated about the theoretical curves by the dashed lines. Figure 4.11 shows the

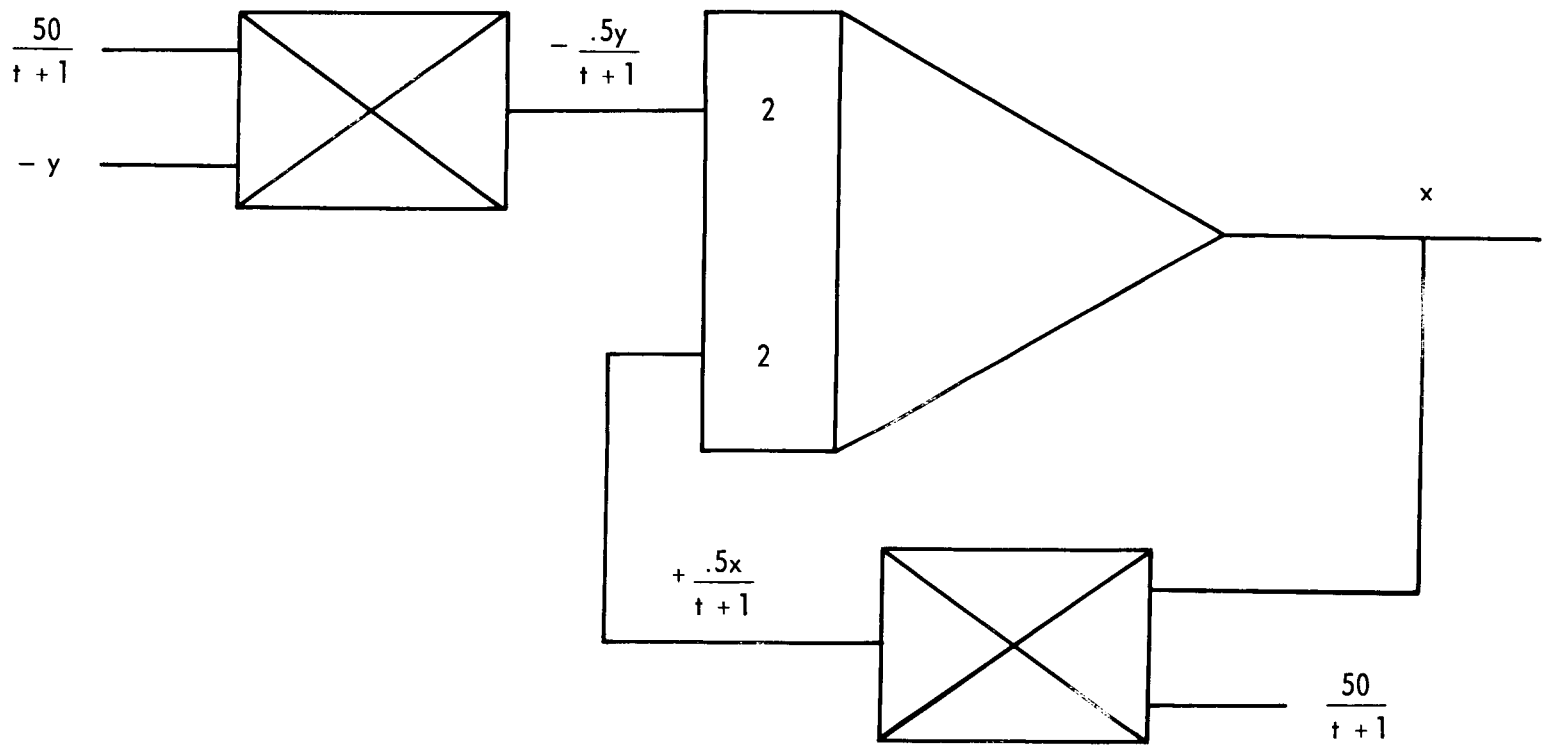

Figure 4.9. Implementation of $\dot{x} + x(\frac{1}{t+1}) = y(\frac{1}{t+1})$.

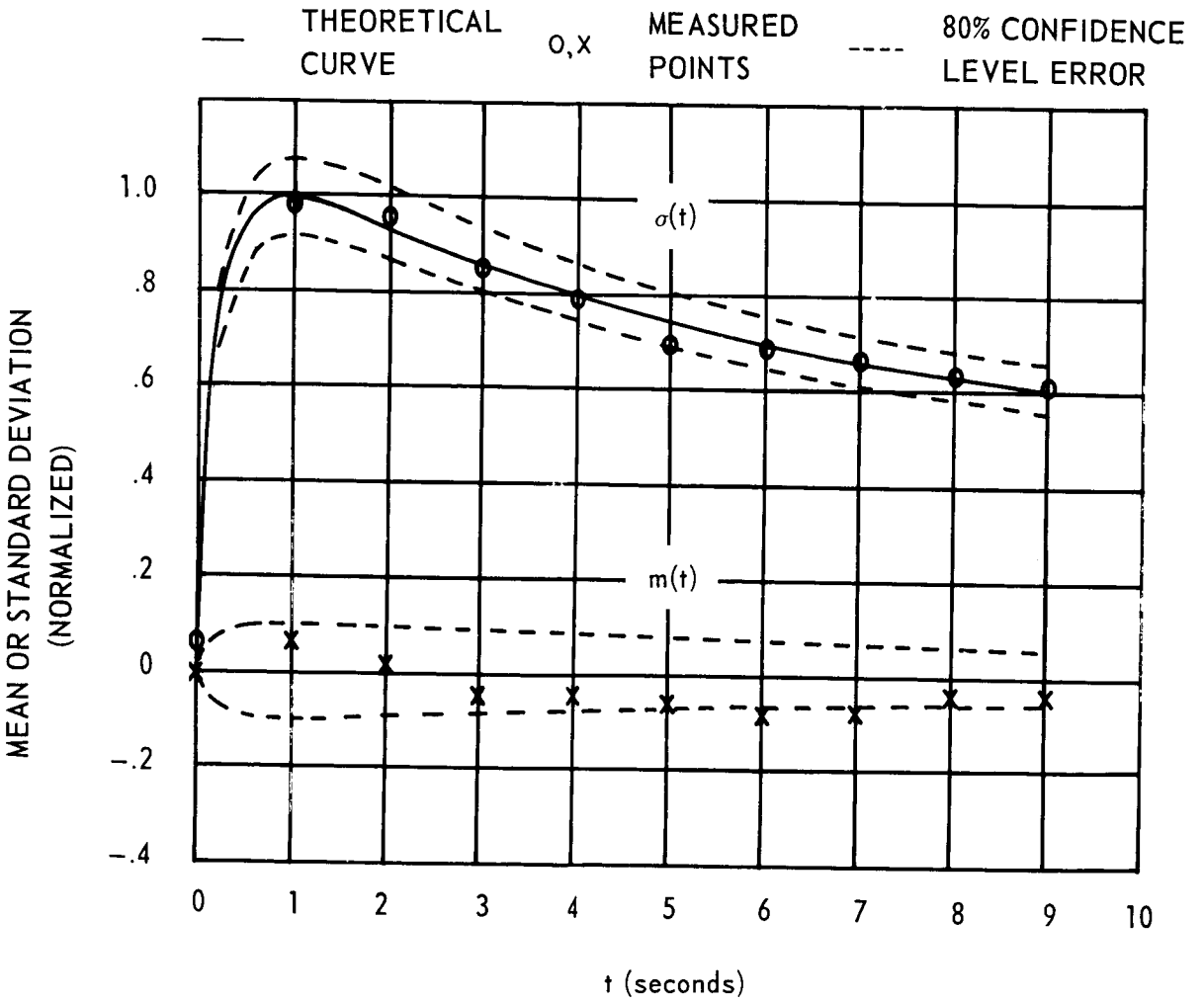

Figure 4.10. Normalized Mean and Standard Deviation as a Function of Time for Example 3. n = 150.

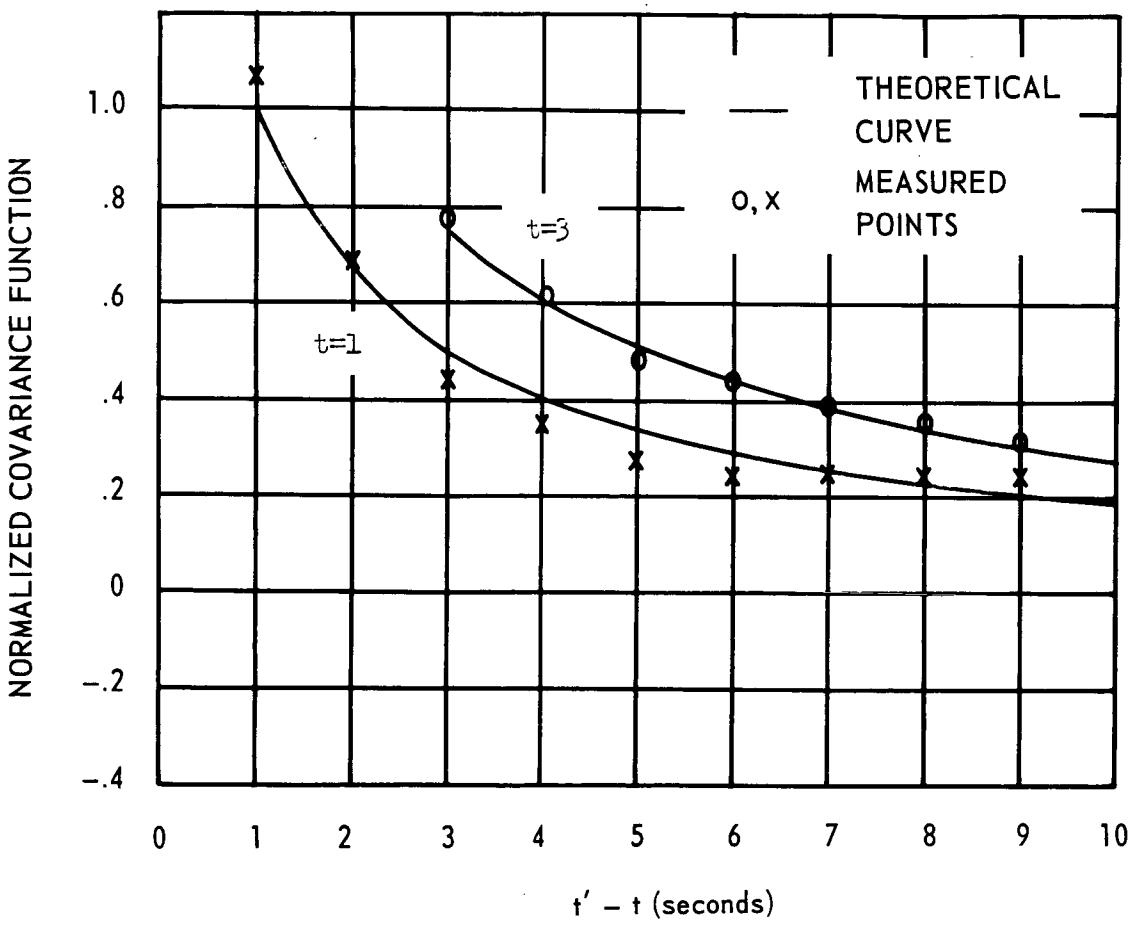

Figure 4.11. Measured and Theoretical Covariance Functions With t=1 and t=3 for Example 3. n = 150.

covariance function $r(t'', t)$ as a function of t'' for two choices of t with the theoretical curves of Equation (4.16) plotted as solid curves. Note again that the measured points follow the theoretical curve with an error of the same order of magnitude as that observed in the standard deviation measurement.

V. CONCLUSIONS

Presented in this Technical Note are methods for the generation and measurement of nonstationary random variables. The desired random variables are generated using analog computer circuitry and a Gaussian white noise source. A technique for synthesizing the computer circuit from the specified first two statistical moments of the required process has been developed and its correctness and utility have been demonstrated.

A specified Gaussian process, which is determined completely by its first two statistical moments, is realized exactly by this procedure. If the required process is non Gaussian, the procedure generates an approximation to the required process having the same first two moments as the required process.

A method for measuring and processing the generated random variables is also presented. An error analysis which yields confidence estimates for the measurement and processing operations is included. Several examples which demonstrate the utility of the generation and measuring techniques have been completed and in each case the random processes generated show an excellent agreement between prescribed and measured parameters when the results are subjected to the computed error bounds.

Further work in connection with this study will be devoted to the analytical representation of nonstationary processes. In particular, methods for constructing appropriate analytical representations of the first two statistical moments from measured data on nonstationary processes will be investigated. Also, additional effort will be devoted to investigating possible extensions and simplifications of the results presented in this Note.

References

1. Doob, J. L., Stochastic Processes, John Wiley and Sons, Inc., New York, 1953.

2. Levy, P., "A Special Problem of Brownian Motion and a General Theory of Gaussian Random Functions," Proc. 3rd Berkeley Symposium on Probability and Statistics, Vol. II, 1956, p. 133.

3. Webb, R. P., Synthesis of Measurement Systems, Ph.D. Thesis, Georgia Institute of Technology, July, 1963.

4. Davenport, W. B., Jr., Root, W. L., An Introduction to the Theory of Random Signals and Noise, McGraw-Hill Book Company, Inc., New York, 1958.

5. Coddington, E. A., Levinson, N., Theory of Ordinary Differential Equations, McGraw-Hill Book Company, Inc., New York, 1956.

6. Cramér, Harold, Mathematical Methods of Statistics, Princeton University Press, Princeton, New Jersey, 1945.

7. Middleton, David, Introduction to Statistical Communication Theory, McGraw-Hill Book Company, Inc., New York, 1960.

8. Hammond, J. L., Jr., "On a Mathematical Description of Noisy Measurement System Performance," Proceedings of the IRE, Vol. 49, No. 11, November, 1961.