[redacted]

FACILITY FORM 602

N65-85571
(ACCESSION NUMBER)

103
(PAGES)

CR 63284
(NASA CR OR TMX OR AD NUMBER)

(THRU)

None
(CODE)

(CATEGORY)

CR 63284

[redacted]

RE-ORDER NO. 61-475

LUNAR PHYSICAL PARAMETERS STUDY

FINAL REPORT

BREADBOARD MODELS OF SURFACE AND DOWNHOLE EQUIPMENT

WORK PERFORMED UNDER JPL CONTRACT NO. N-33552

This work was performed for the Jet Propulsion Laboratory, California Institute of Technology, sponsored by the National Aeronautics and Space Administration under Contract NAS7-100.

TEXACO, INC.

OCTOBER 10, 1961

RECORDER No. 61-475

LUNAR PHYSICAL PARAMETERS STUDY

BREADBOARD MODELS OF SURFACE AND DOWNHOLE EQUIPMENT

FINAL REPORT

TABLE OF CONTENTS

	Page No.
Introduction	1
Scope of the Project	2
Experimental Work	3
Conclusions	4
APPENDIX A	A1
APPENDIX B	
SURFACE INSTRUMENTATION - Part and Assembly Drawings	B1
APPENDIX C	
SUBSURFACE INSTRUMENTATION	C1
Brief Description of Downhole Sonde Referring to Fig. 1 and Drawing RA-9449	C1
Notes on Downhole Logging Sonde (RA-9449)	C4
Drawings of Subsurface Sonde	

LUNAR PHYSICAL PARAMETERS STUDY

BREADBOARD MODELS OF SURFACE AND DOWNHOLE EQUIPMENT

FINAL REPORT

Introduction

This final report summarizes the work which has been done since December 15, 1960. During this time, efforts have been directed toward the design, construction and evaluation of laboratory instrumentation to demonstrate the feasibility of performing those experiments postulated in the final report covering the feasibility studies conducted during the period July 15 - December 15, 1960.

Of those experiments proposed in the final report of the feasibility study, all but one has been shown to be practical over the anticipated range of lunar properties. The one experiment which has not been proven feasible is the measurement of electrical resistivity by noting the variation of the Q of a coil produced by varying the resistivity of its surroundings. Though shown to be workable in principle, this method could not be extended to cover the higher ranges of resistivity ($> 10^{12}$ ohm cm) anticipated for the lunar environment. The problems here arose from the inherent instability of the Q-multiplier circuitry required for resistivity measurements in the range above 10^{12} ohm cm. It was agreed by Jet Propulsion Laboratory, Hughes Aircraft, and Texaco that the state of the art was not adequate to insure

development of usable measuring circuitry for this experiment within the time allotted for this program. Therefore, the measurement was discarded from both surface and downhole units.

All other surface and downhole equipment evolved as anticipated in the feasibility study final report.

Scope of the Project

The development of "breadboard" models as undertaken by Texaco under Jet Propulsion Laboratory Contract N-33552 had as its objective the design and construction of devices to demonstrate, under laboratory conditions, the feasibility of measuring certain parameters on and beneath the lunar surface. The instruments were required to perform the indicated measurements to a degree of precision sufficient to demonstrate that instruments capable of being calibrated so as to produce data of the required accuracy and precision could be built.

These instruments were not required to withstand the shock and vibration of launch and flight. Neither were any of the instruments required to perform in the extremes of temperature and pressure anticipated for the lunar environment, unless such environmental conditions had a direct bearing upon the ability of an instrument to perform its desired function. This meant, in practice, that the acoustic source must be tested in vacuum and that the radiometric devices used to measure thermal radiation must be tested in vacuum and subjected to the full range of

temperature (100°K to 400°K) anticipated for the lunar environment. All other devices, it was concluded, could be tested under ambient conditions, i.e., room temperature and atmospheric pressure.

Experimental Work

Technical information concerning the feasibility study and the development of breadboard models based upon this feasibility study has been documented in a series of partial reports. A list of these reports follows:

Partial Report Number	Title
1.	Measurement of Lunar Surface Density
2.	Measurement of Lunar Thermal Properties
3.	Measurement of Lunar Surface Acoustic Properties
4.	Measurement of Lunar Parameters using Downhole Nuclear Logging Tools
5.	Measurement of Lunar Thermal Properties
6.	Feasibility of Downhole Logging Tool
7.	Measurement of Electrical Properties on Lunar Surface
	Final Report, Feasibility Study
8.	Design Calculations, Measurement of Thermal Diffusivity
9.	Breadboard Penetrometer Hardness Measurement
10.	Acoustic Velocity Breadboard Tests
11.	Breadboard Tests of Surface Magnetic Susceptibility Coils

RE-ORDER No. 61-475

12. Computer Study of the Lunar Thermal Program

Breadboard Tests of the 4-1/2 In. Surface Magnetic Susceptibility Coils - A Supplementary Report to Partial Report No. 11, 9-20-61

13. Breadboard Development and Tests of Subsurface Thermal Apparatus

14. Breadboard Tests of Subsurface Magnetic Susceptibility Coils

15. Breadboard Tests of Surface and Subsurface Density Measuring Instruments

---

The end product of this feasibility study and the breadboard development program which followed was the instrumentation which was delivered to Jet Propulsion Laboratory during July and August, 1961. Complete drawings of these instruments are included as appendices to this report.

Conclusions

It is felt that the devices built by Texaco and submitted to Jet Propulsion Laboratory do indeed demonstrate the practicality of making the desired measurements. In some cases (magnetic susceptibility and density) the breadboard instruments represent a considerably higher degree of refinement than we had at first expected. The penetrometer, developed to measure surface hardness, has produced data which offers not only a semi-quantitative estimate of Moh hardness, but considerable qualitative

information regarding the crystalline structure of the material impacted.

Other areas have produced equally surprising, but not necessarily so gratifying results. The performance in vacuum of the acoustic source (explosive) has been most unexpected and has presented serious problems which must be either conquered or outflanked before this acoustic source device is considered satisfactory.

By far, the largest amount of developmental work remains to be done in the area of thermal measurements. Here, not only must considerable work be done to develop the instruments themselves to a satisfactory state, but standards and procedures must be devised to evaluate and calibrate these instruments.

APPENDIX A

The following is a brief summary of the measuring capabilities of the lunar instrumentation based on the results of the breadboard testing program:

I. Density

A. Surface

1. Range - 0.1 to 4.0 grams/cm^3
2. Precision - ±15% at 2.0 grams/cm^3 with protuberances up to 4 in.

B. Subsurface

1. Range - 0.1 to 4.0 grams/cm^3
2. Precision - ±5% at 1.95 grams/cm^3 with known hole size.
   ±10% at 1.95 grams/cm^3 for hole size 1.5 ±0.25 in. diameter with no caliper.

II. Magnetic Susceptibility

A. Surface

1. Range - 1×10^{-6} to 0.1 cgs units
2. Maximum error on "standard irregular surface" (Partial Report No. 11 and Supplement) -
   a. 12.5 in. 3 coil system: -21%
   b. 4.5 in. 3 coil system: -42%
   c. 2.625 in. 2 coil system: -72%
3. Sensitivity (approximate)
   a. 12.5 in. 3 coil system: $0.01 \frac{\text{microhenries}}{1\text{x}10^{-6} \text{ cgs units}}$.

b. 4.5 in. 3 coil system: 0.01 $\frac{\text{microhenries}}{1\text{x}10^{-6}\text{ cgs units}}$.

B. Subsurface

1. Range - 1×10^{-6} to 0.1 cgs units
2. Maximum error due to borehole variation from 1.25 to 1.75 in. diameter - 50% (no caliper). This can be considerably reduced when hole size is known.

III. Acoustic Velocity, Surface and Subsurface

1. Range - 500 to 13,500 ft/sec.
2. Precision - ≈ 20%. Limited by ability to read break point from photographic record.

IV. Penetration Hardness, Surface Only

1. Range - 1 to 6 on Moh scale. Since this measurement is largely of a qualitative nature, no estimate of precision or sensitivity is possible.

V. Temperature, Surface and Downhole

1. Range - 100°K to 400°K
2. Precision - unknown
3. Sensitivity - 0.4 microvolts/°K at 120°K
   13 microvolts/°K at 373°K

VI. Thermal Diffusivity

A. Surface

No experimental determinations have been made using the surface equipment.

B. Subsurface

Range - thermal conductivity of 1.4×10^{-4} cal/sec cm °C to 8.8×10^{-4} cal/sec cm °K.

The apparatus would qualitatively distinguish among materials in the range specified.

RE-ORDER No. 61-475

APPENDIX B

SURFACE INSTRUMENTATION

Since the design, construction, calibration and testing of the various surface units are well documented in the partial reports issued during the breadboard development program, they will not be described in detail in this final report. However, all part and assembly drawings of the breadboard surface units are collected here for convenient reference.

REPORT No. 61-475

DRAWING & PART NO.	ASSEMBLY NUMBER	QUAN. REQD.	STOCK ITEM	DESCRIPTION
				PENETROMETER
R 9461		1		Bracket
R 9462		3		Tube
U 9463		3		Relay Bracket
U 9464		3		Relay Arm
U 9465		3		Impact Cone
U 9466		3		Spacer
U 9467		3		Accelerometer Guide
				MAGNETIC SUSCEPTIBILITY COILS
U 9496		1		Null Coils Assembly
U 9480		1		Null Coils & Surface Coils Electrical Wiring Diagram
U 9481		1		Small Surface Coils Assembly
U 9482	U 9481	1		Coil Holders & Inner Coil Spool
U 9483	"	1		Outer Coil Spool
U 9484	U 9496	6		Lock Nut
U 9485	"	3		Coil Spool
U 9486	"	1		Null Coil Holding Rod
U 9487	"	1		Null Coils Base
U 9488	U 9489	1		Electrical Wiring Diagram for Large Surface Coils
U 9489		1		Large Surface Coils Assembly
U 9490	U 9489	1		Coil Spool "A"
U 9491	"	1		Coil Spool "B"
U 9492	"	1		Coil Spool "C"
U 9495	"	1		Layout diagram for bridge surface and subsurface magnetic susceptibility measurements.

TEXACO R. & T. DEPT. EXPL. & PROD. RESEARCH DIV. BELLAIRE, TEXAS	PARTS LIST FOR Job #N33552 - Lunar Surface Equipment	DATE 7-19-61	BY JJH

ORDER No. 61-475

DRAWING & PART NO.	ASSEMBLY NUMBER	QUAN REQD	STOCK ITEM	DESCRIPTION
U 9493	U 9489	1 ea.		Holders for Coil Spools
U 9558	"	4		Peaking Spacers
U 9494		1		Bridge Circuit Diagram for Magnetic Susceptibility Measurements
U 9559		1		Electrical Wiring Diagram for Medium Surface Coils
U 9560		1		Medium Surface Coils Assembly
U 9561	U 9560	1		Coil Spool "A"
U 9562	"	1		Coil Spool "B"
U 9563	"	1		Coil Spool "C"
U 9564	"	4		Lock Nut - Null Coil "A"
U 9565	"	1		Null Coil "A" Holding Rod
U 9566	"	4		Peaking Spacers
R 9571		1		Density Sensor & Surface Velocity
U 9572		1		Lead Spacer for Density Sensor
U 9610		1		Hall-Sears Geophone
1:794.36-34		1		Breadboard Acoustic Source Holder
1:794.36-35		1		Source Holder Enclosure for Vacuum Tests
1:794.46-47		1		Parts List for Mutual Inductance Bridge
U 9612		1		Coils & Bridge Wiring Diagram for Surface Coils & Null Coils-Small Surface Magnetic Suscept. Coils
U 9613		1		Coils & Bridge Wiring Diagram for Medium Surface Magnetic Susceptibility Coils

TEXACO R. & T. DEPT. EXPL. & PROD. RESEARCH DIV. BELLAIRE, TEXAS	PARTS LIST FOR Job #N33552 - Lunar Surface Equipment	DATE 7-19-61	BY JJH

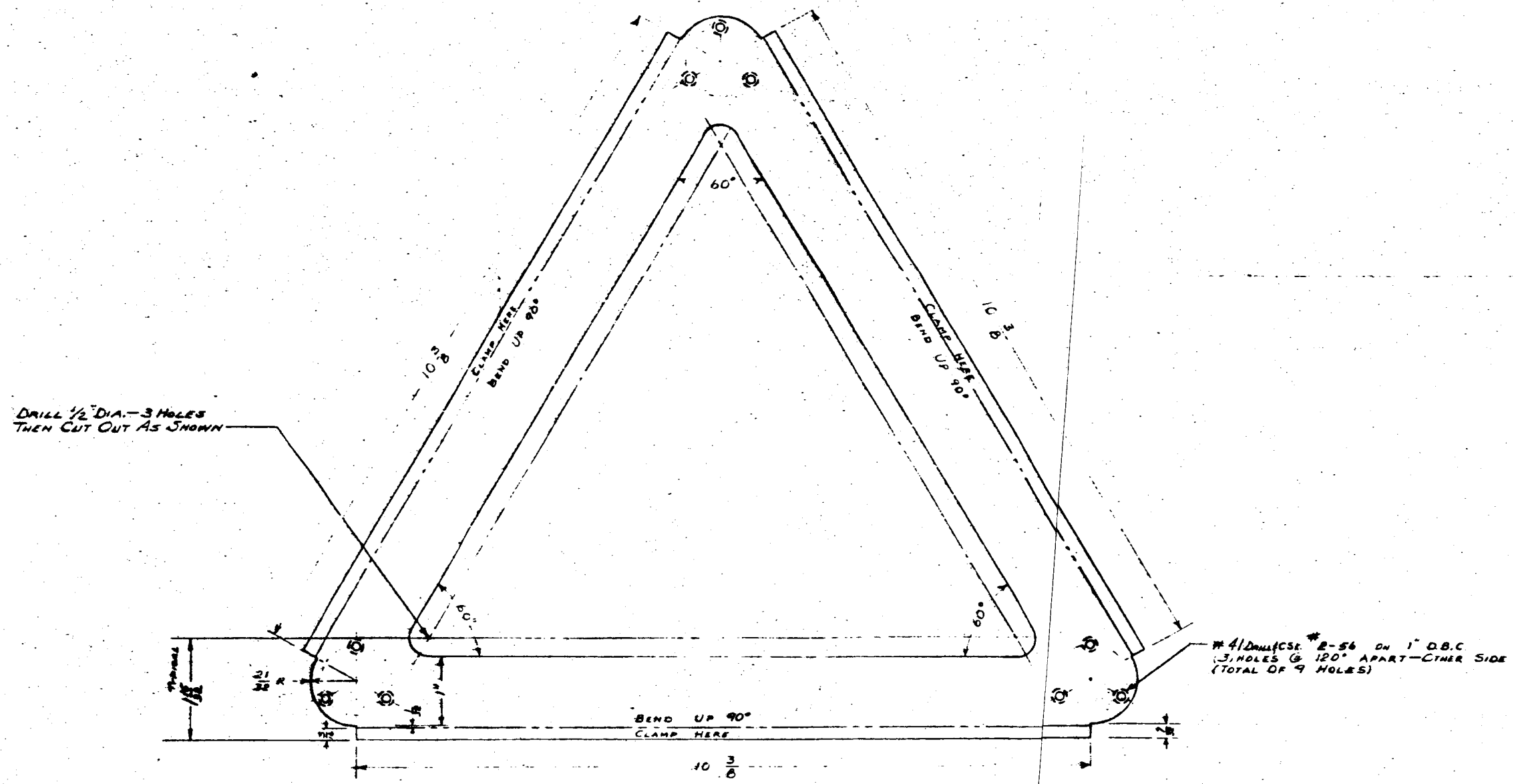

LET.	REVISIONS	DATE	BY

MATERIAL	SIZE	QUANT.
ALUMINUM	12 x 12 x 1/16	1

UNLESS OTHERWISE SPECIFIED ALL DIMENSIONS ARE:
FRACTIONAL ± 1/64"
DECIMAL ± .005"
ANGULAR ± 0° 30'

DESIGNED		DATE
DRAWN	J.K.	DATE 5-19-61
TRACED		DATE
CHECKED		DATE

SCALE: FULL

FIRST INST. NO.

TEXACO INC.
RESEARCH AND TECHNICAL DEPARTMENT
EXPLORATION AND PRODUCTION RESEARCH DIVISION
BELLAIRE, TEXAS

CORRECT FOR INST. NO.

SUPERSEDED BY

SUPERSEDES

BRACKET
FOR PENETROMETER
PROJ 1 — JOB # N33552

ASSEMBLY NONE

R9461

ORDER NO. 91-432 14

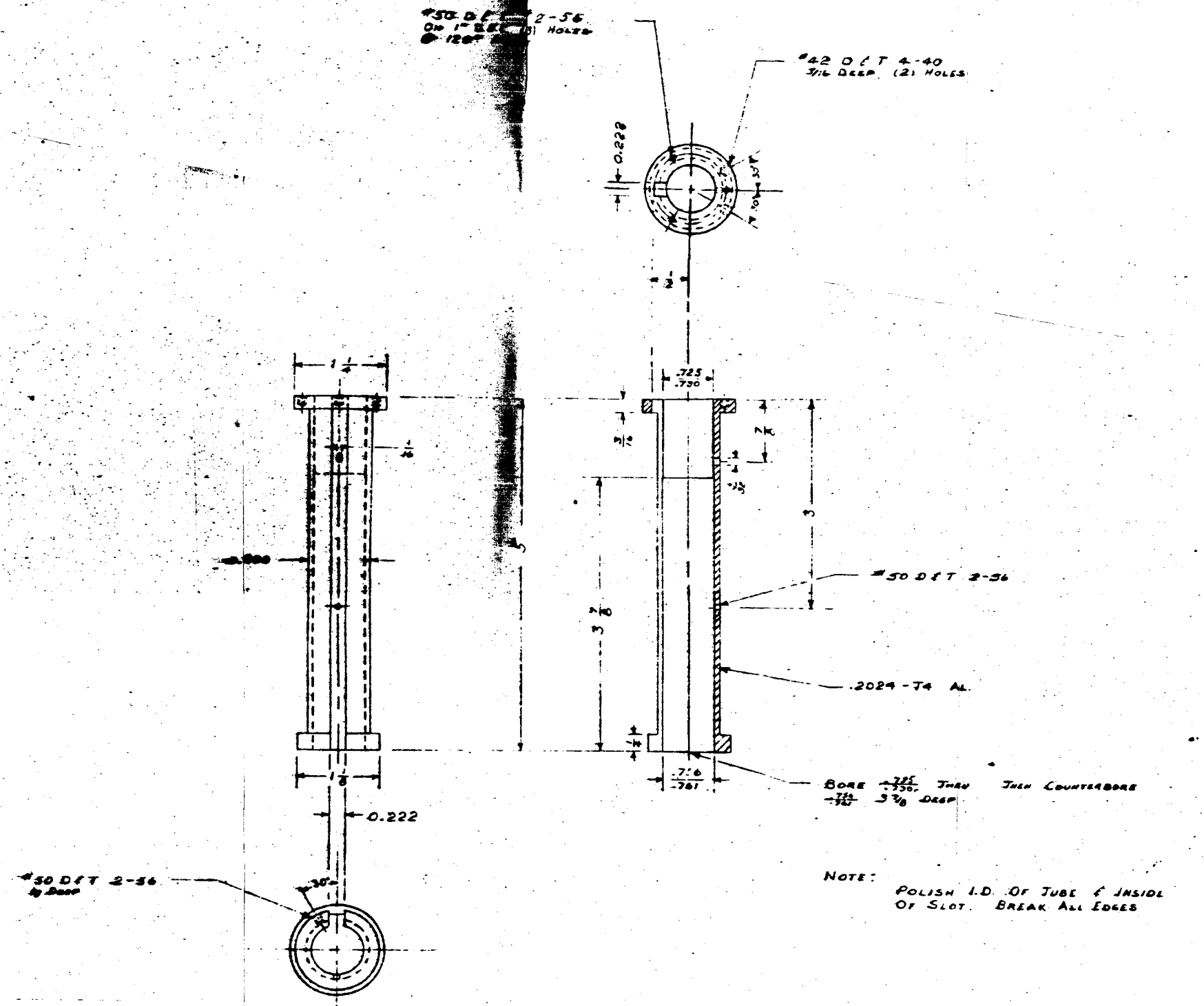

NOTE:
POLISH I.D. OF TUBE & INSIDE OF SLOT. BREAK ALL EDGES

2024-T4 AL	5 1/2 x 1 1/2	3	UNLESS OTHERWISE SPECIFIED ALL DIMENSIONS ARE: FRACTIONAL ± 1/64" DECIMAL ± .005" ANGULAR ± 0° 30'	DESIGNED	DATE	SCALE: FULL	FIRST INST. NO.	CORRECT FOR INST. NO.	LET. / REVISIONS / DATE / BY
				DRAWN J.K.	DATE 5-15-61	TEXACO INC. RESEARCH AND TECHNICAL DEPARTMENT EXPLORATION AND PRODUCTION RESEARCH DIVISION BELLAIRE, TEXAS		SUPERSEDED BY	SUPERSEDES
MATERIAL	SIZE	QUANT.		TRACED	DATE				
				CHECKED	DATE				

TUBE
FOR PENETROMETER
PROJ 1 — JOB # N33552

ASSEMBLY NONE

R9462

15

RE-ORDER No. 61-475

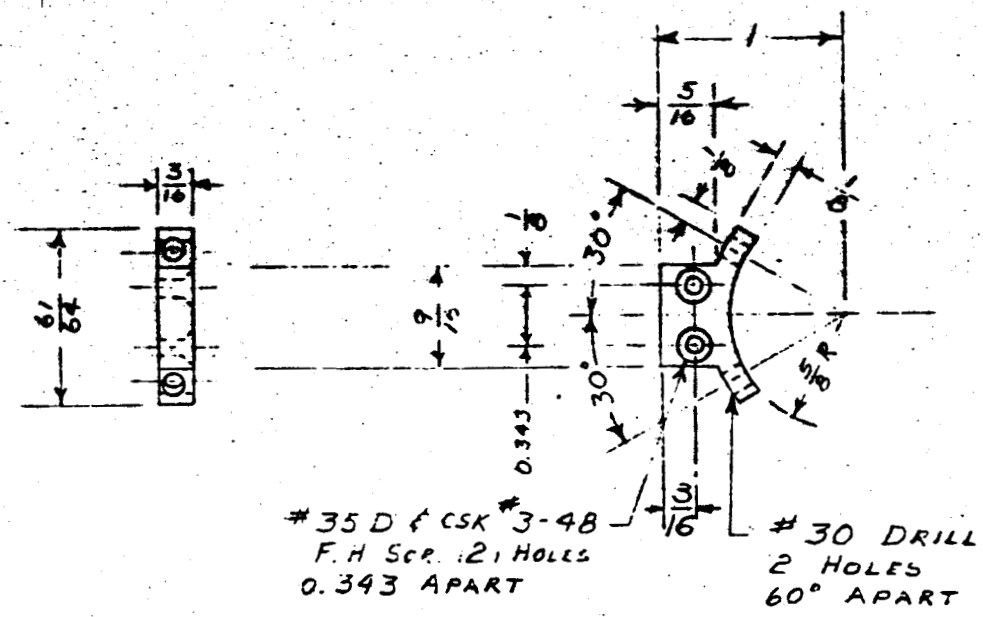

NOTE:
BREAK ALL EDGES

MATERIAL	SIZE	QUANT.	LET.	REVISIONS	DATE	BY
ALUMINUM	1 1/8 X 1 X 3/16	3				

UNLESS OTHERWISE SPECIFIED ALL DIMENSIONS ARE:
FRACTIONAL ± 1/64"
DECIMAL ± .005"
ANGULAR ± 0° 30'

SUPERSEDED BY
SUPERSEDES
CORRECT FOR No.
FIRST INST. No.

RELAY BRACKET
FOR PENETROMETER
PROJ 1 — JOB # N33552

TEXACO Inc.
RESEARCH AND TECHNICAL DEPARTMENT
EXPLORATION AND PRODUCTION RESEARCH DIVISION
BELLAIRE, TEXAS

DE. DR. J. K. TR.
CK. DATE: 5-18-61
SCALE: FULL
ASSEMBLY No. NONE

U9463/6

REQUIR No. 61-475

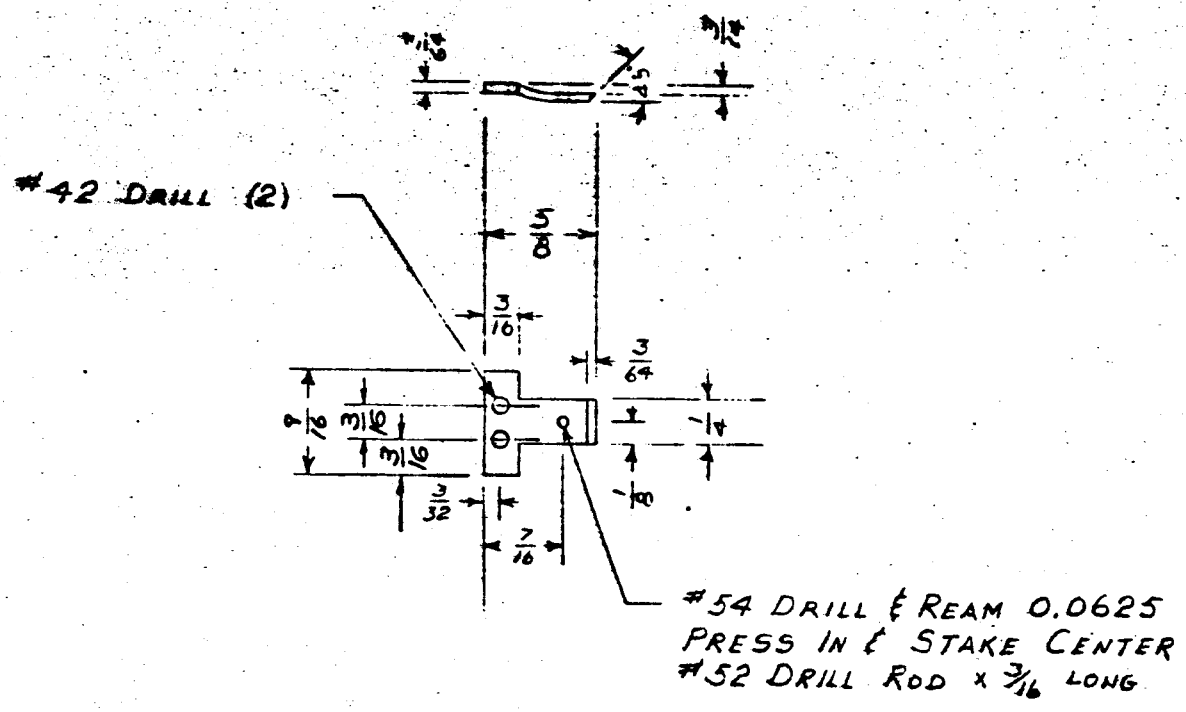

NOTE:
MAKE FINAL ADJUSTMENT OF PART AT. ASS'Y. WITH RELAY

MATERIAL	SIZE	QUANT.	LET.	REVISIONS	DATE	BY
BRASS	5/8 x 3/4 x 3/64	3				

UNLESS OTHERWISE SPECIFIED ALL DIMENSIONS ARE:
FRACTIONAL ± 1/64"
DECIMAL ± .005"
ANGULAR ± 0° 30'

SUPERSEDED BY
SUPERSEDES
CORRECT FOR NO.
FIRST INST. NO.

RELAY ARM
FOR PENETROMETER
PROJ 1 — JOB # N33552

TEXACO Inc.
RESEARCH AND TECHNICAL DEPARTMENT
EXPLORATION AND PRODUCTION RESEARCH DIVISION
BELLAIRE, TEXAS

DE. | DR. J. K | TR.
CK. | DATE: 5 · 15 61
SCALE: FULL
ASSEMBLY NO. NONE

U9464

RE-ORDER No. 61-475

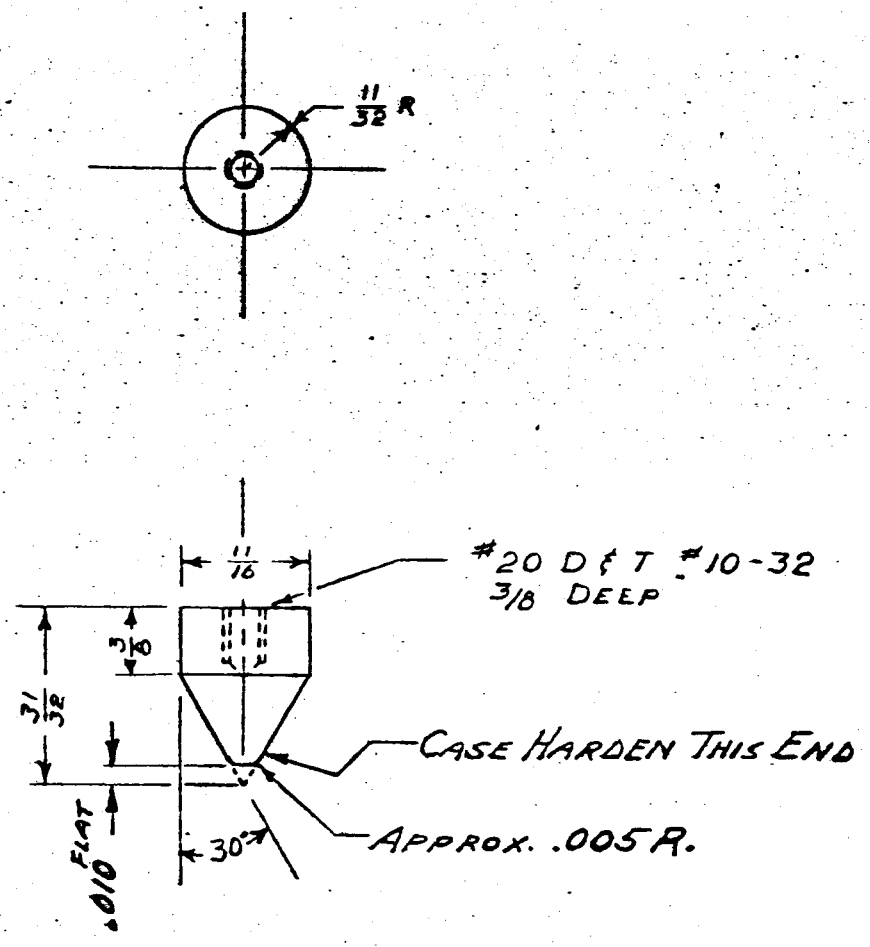

MATERIAL	SIZE	QUANT.	LET.	REVISIONS	DATE	BY
4140 STEEL	3/4 x 1 1/8 ROD	3				

UNLESS OTHERWISE SPECIFIED ALL DIMENSIONS ARE:
FRACTIONAL ± 1/64"
DECIMAL ± .005"
ANGULAR ± 0° 30'

SUPERSEDED BY
SUPERSEDES
CORRECT FOR No.
FIRST INST. No.

IMPACT CONE
FOR PENETROMETER
PROJ 1 — JOB # N33552

DE. | DR. U. K. | TR.
CK. | DATE: 5-17-61
SCALE: FULL
ASSEMBLY No. NONE

TEXACO Inc.
RESEARCH AND TECHNICAL DEPARTMENT
EXPLORATION AND PRODUCTION RESEARCH DIVISION
BELLAIRE, TEXAS

U9465 18

RE-ORDER No. 61-475

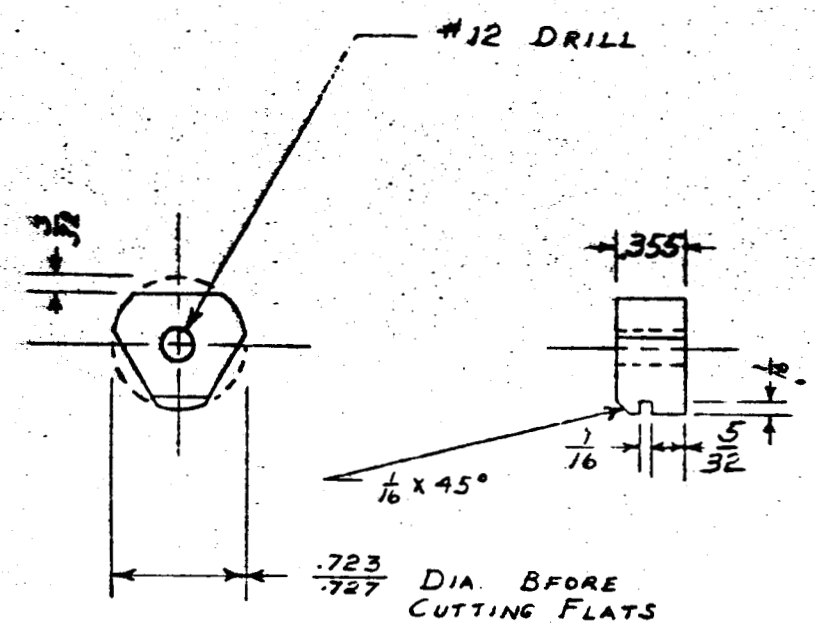

NOTE:
POLISH ALL CORNERS

MATERIAL	SIZE	QUANT.	LET.	REVISIONS	DATE	BY
YELLOW BRASS	3/4 X 1/2 IN. ROD.	3				

UNLESS OTHERWISE SPECIFIED ALL DIMENSIONS ARE:
FRACTIONAL ± 1/64"
DECIMAL ± .005"
ANGULAR ± 0° 30'

SUPERSEDED BY
SUPERSEDES
CORRECT FOR No.
FIRST INST. No.

SPACER
FOR PENETROMETER
PROJ 1 — JOB # N33552

TEXACO Inc.
RESEARCH AND TECHNICAL DEPARTMENT
EXPLORATION AND PRODUCTION RESEARCH DIVISION
BELLAIRE, TEXAS

DE. | DR. J. K. | TR.
CK. | DATE: 5-19-61
SCALE: FULL
ASSEMBLY No. NONE

U9466

REMARK No. 61-475

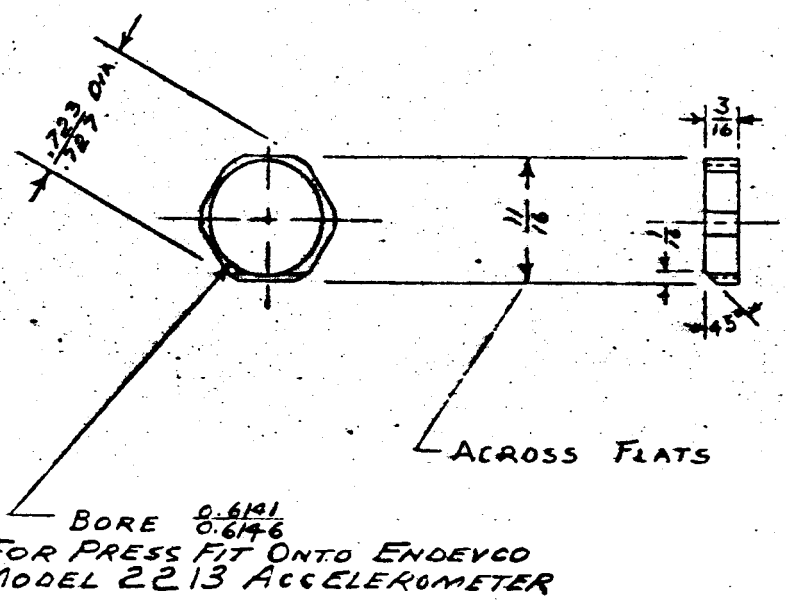

NOTE:
POLISH ALL CORNERS

MATERIAL	SIZE	QUANT.	LET.	REVISIONS	DATE	BY
YELLOW BRASS	3/4 X 1/2 INCH ROD	3				

UNLESS OTHERWISE SPECIFIED ALL DIMENSIONS ARE:
FRACTIONAL ± 1/64"
DECIMAL ± .005"
ANGULAR ± 0° 30'

SUPERSEDED BY
SUPERSEDES
CORRECT FOR No.
FIRST INST. No.

ACCELEROMETER GUIDE
FOR PENETROMETER
PROJ 1 — JOB # N33552

TEXACO Inc.
RESEARCH AND TECHNICAL DEPARTMENT
EXPLORATION AND PRODUCTION RESEARCH DIVISION
BELLAIRE, TEXAS

DR. J. K.
DATE: 5-19-61
SCALE: FULL
ASSEMBLY No. NONE

U9467 20

RECORDER No. 61-475

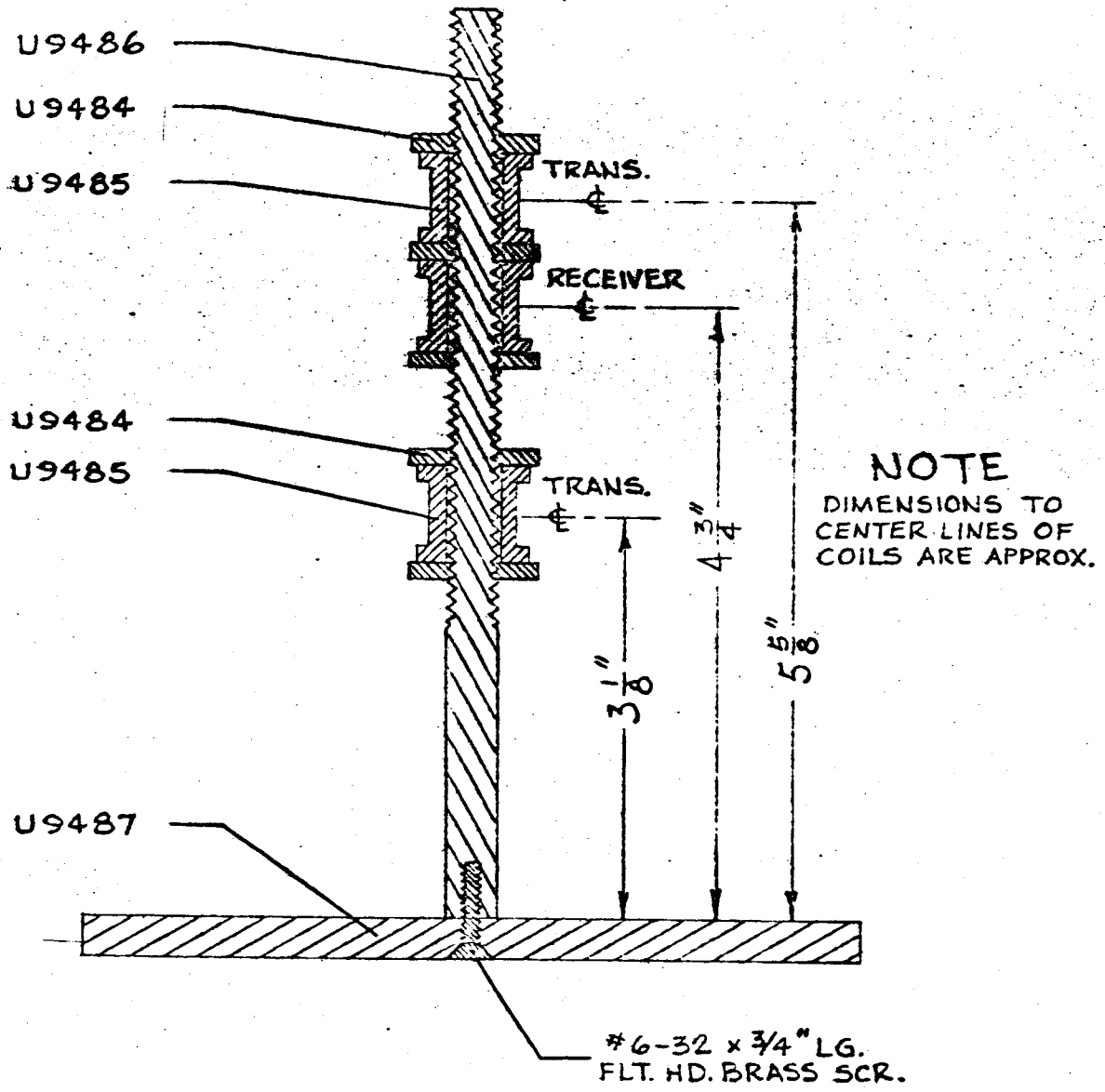

NOTE
DIMENSIONS TO CENTER LINES OF COILS ARE APPROX.

(FOR CIRCUIT SEE U9480)

MATERIAL	SIZE	QUANT.	LET.	REVISIONS	DATE	BY

UNLESS OTHERWISE SPECIFIED ALL DIMENSIONS ARE:
FRACTIONAL ± 1/64"
DECIMAL ± .005"
ANGULAR ± 0° 30'

SUPERSEDED BY
SUPERSEDES
CORRECT FOR No.
FIRST INST. No.

NULL COILS-ASSEMBLY

SMALL SURFACE MAGNETIC SUSCEPTIBILITY COILS

TEXACO Inc.
RESEARCH AND TECHNICAL DEPARTMENT
EXPLORATION AND PRODUCTION RESEARCH DIVISION
BELLAIRE, TEXAS

DE. DR. JAG TR.
CK DATE 6-23-61
SCALE: 3/4" = 1"
ASSEMBLY No. U9496

U9496 21

RE-ORDER No. 61-475

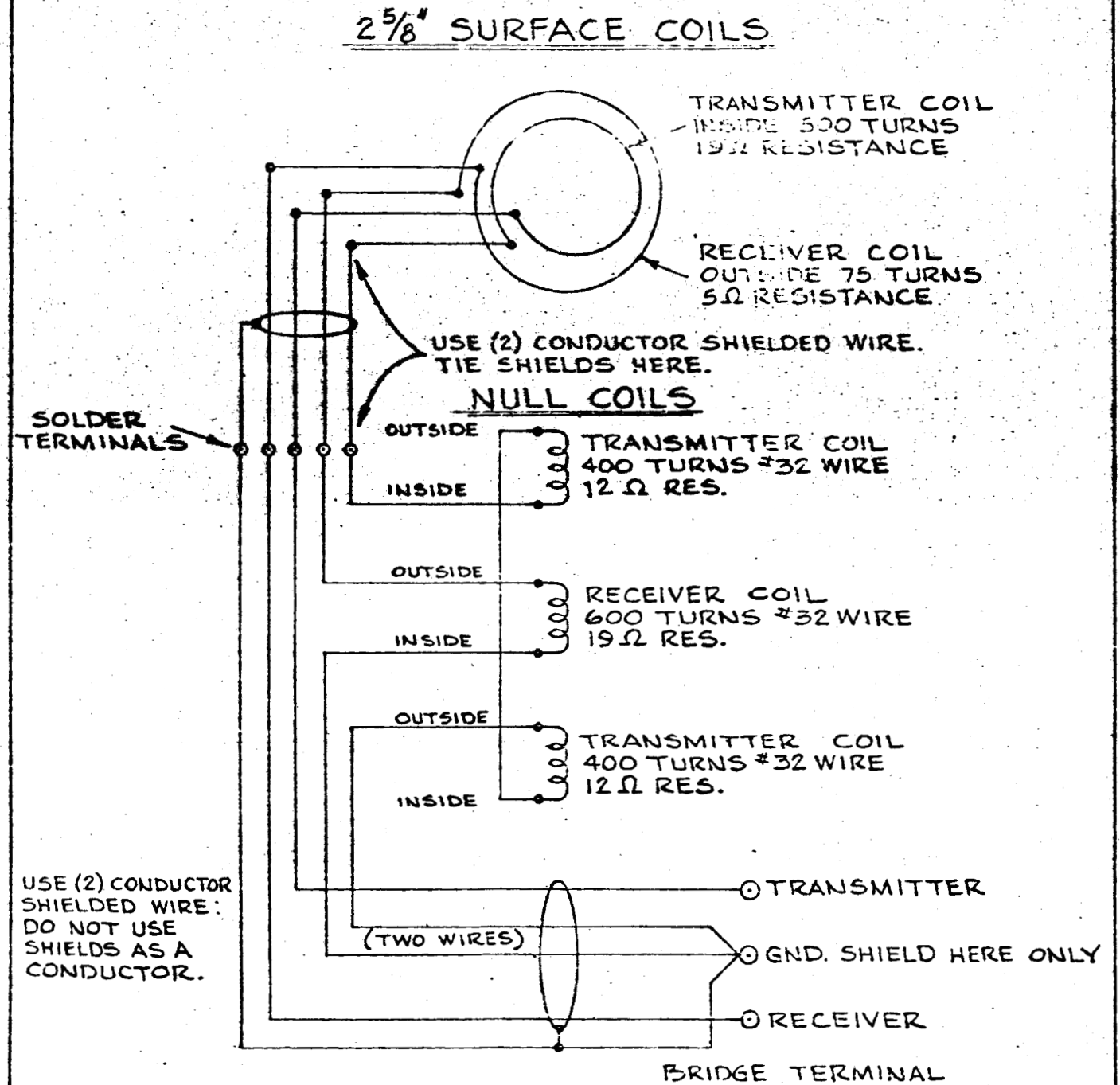

MATERIAL	SIZE	QUANT.	LET.	REVISIONS	DATE	BY

UNLESS OTHERWISE SPECIFIED ALL DIMENSIONS ARE:
FRACTIONAL ± 1/64"
DECIMAL ± .005"
ANGULAR ± 0° 30'

SUPERSEDED BY
SUPERSEDES
CORRECT FOR No.
FIRST INST. No.

ELECTRICAL WIRING DIAGRAM FOR SURFACE COILS & NULL COILS SMALL SURFACE MAGNETIC SUSCEPTIBILITY COILS

TEXACO Inc.
RESEARCH AND TECHNICAL DEPARTMENT
EXPLORATION AND PRODUCTION RESEARCH DIVISION
BELLAIRE, TEXAS

DR. JAG
DATE 6-20-61
SCALE CIRCUIT
U9481
ASSEMBLY No. U9496

U9480 22

ORDER No. 61-475

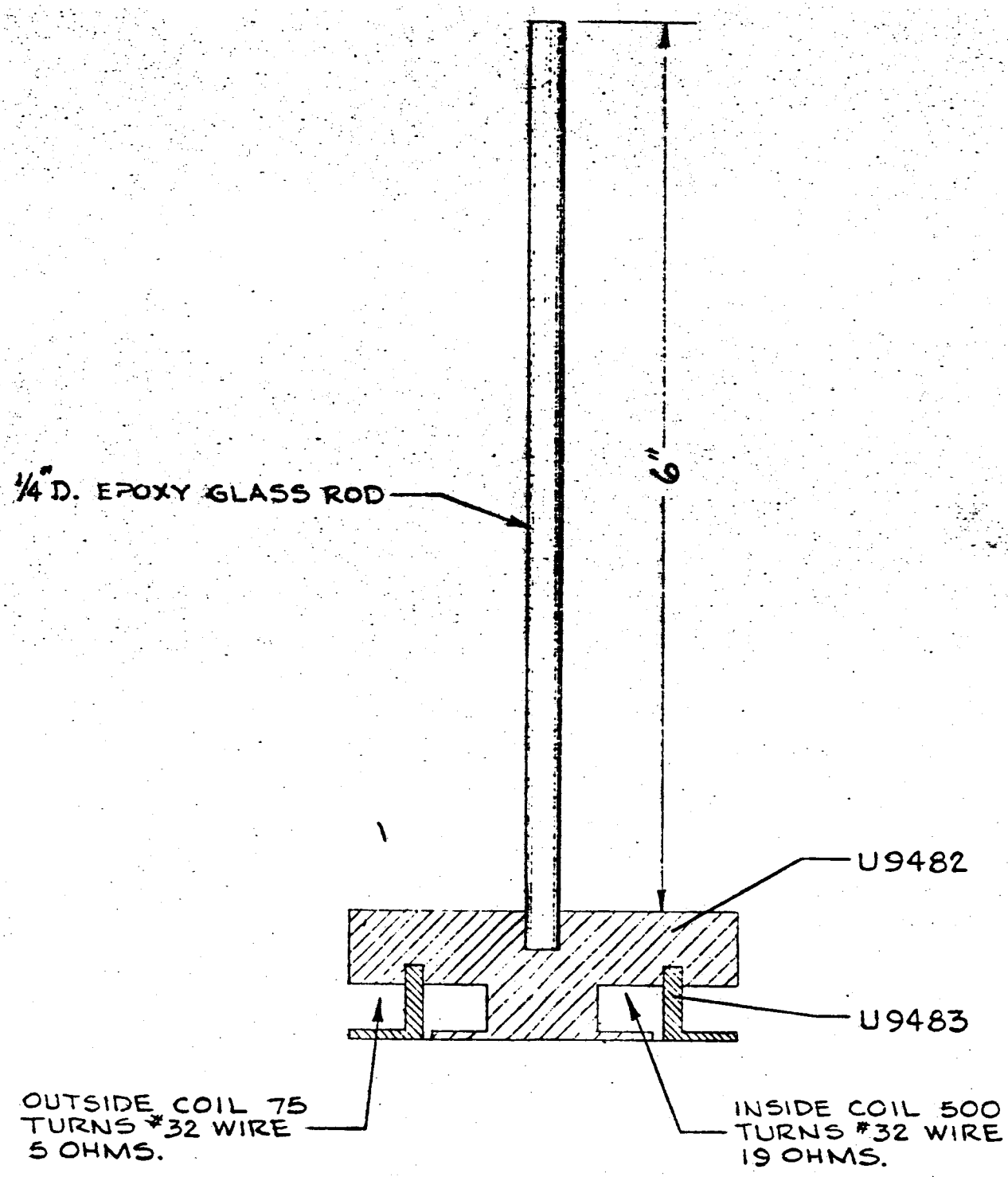

MATERIAL	SIZE	QUANT.	LET.	REVISIONS	DATE	BY

UNLESS OTHERWISE SPECIFIED ALL DIMENSIONS ARE:
FRACTIONAL ± 1/64"
DECIMAL ± .005"
ANGULAR ± 0° 30'

SUPERSEDED BY
SUPERSEDES
CORRECT FOR No.
FIRST INST. No

ASSEMBLY OF SMALL SURFACE COILS
SMALL SURFACE MAGNETIC SUSCEPTIBILITY COILS

TEXACO Inc.
RESEARCH AND TECHNICAL DEPARTMENT
EXPLORATION AND PRODUCTION RESEARCH DIVISION
BELLAIRE, TEXAS

DE. DR. JAG TR.
CK. DATE: 6-19-61
SCALE: FULL
ASSEMBLY No. U9481

U9481 B

RE-ORDER No. 61-475

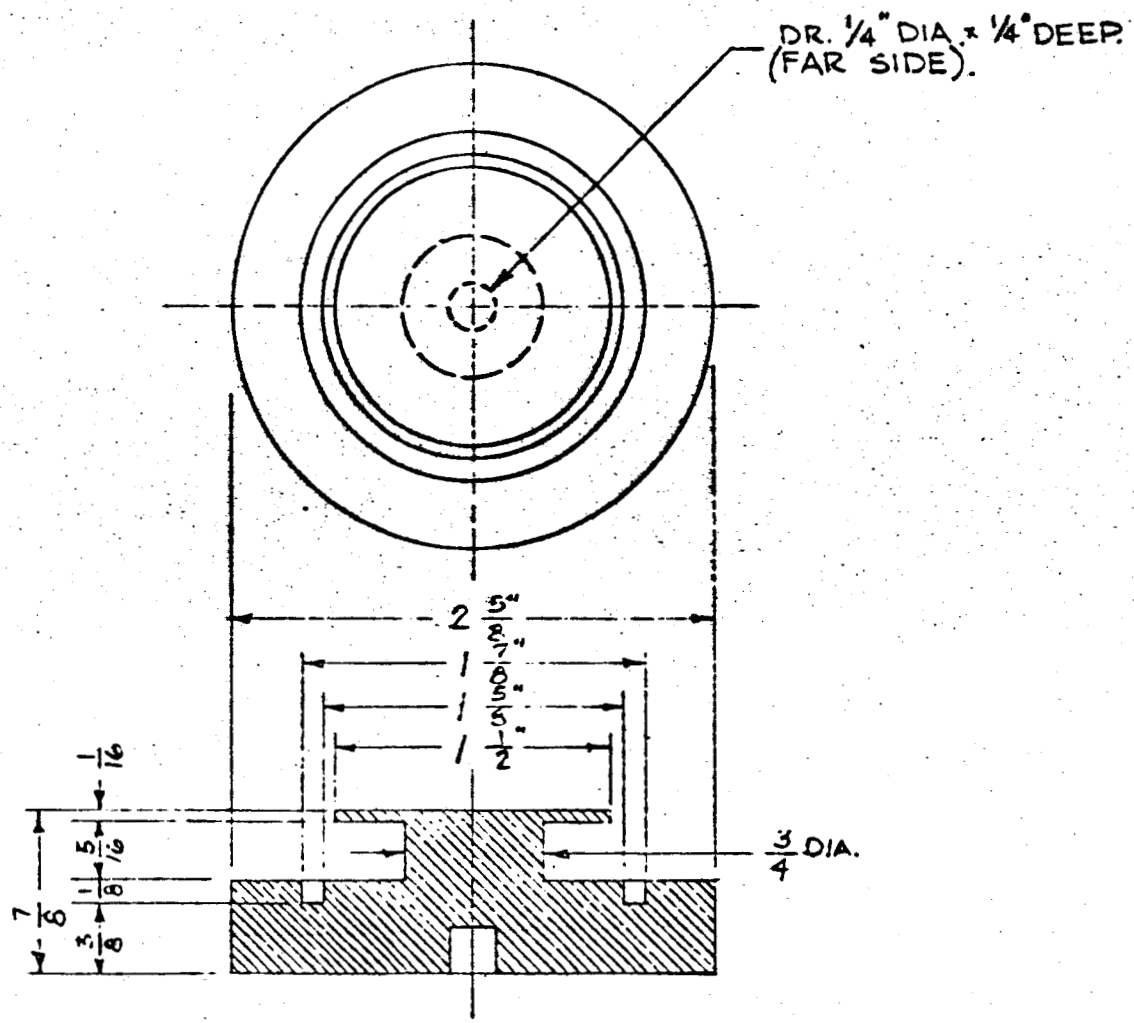

MATERIAL	SIZE	QUANT.	LET.	REVISIONS	DATE	BY
EPOXY GLASS		1				

UNLESS OTHERWISE SPECIFIED ALL DIMENSIONS ARE:
FRACTIONAL = 1/64"
DECIMAL = .005"
ANGULAR = 0° 30'

SUPERSEDED BY
SUPERSEDES
CORRECT FOR No.
FIRST INST. No.

COIL HOLDERS & INNER COIL SPOOL
SMALL SURFACE MAGNETIC SUSCEPTIBILITY COILS

TEXACO Inc.
RESEARCH AND TECHNICAL DEPARTMENT
EXPLORATION AND PRODUCTION RESEARCH DIVISION
BELLAIRE, TEXAS

DE. DR. JAG TR.
CK. DATE: 6-19-61
SCALE: FULL
ASSEMBLY No. U9481

U9482 24

RE-ORDER No. 61-475

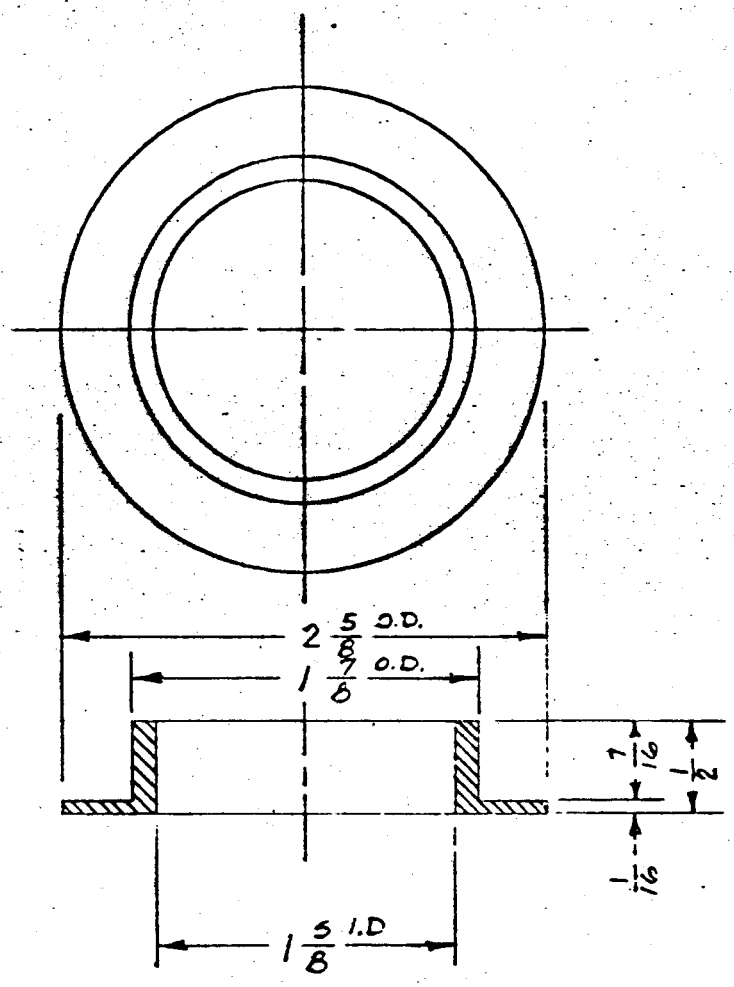

MATERIAL	SIZE	QUANT.	LET.	REVISIONS	DATE	BY
EPOXY GLASS		1				

UNLESS OTHERWISE SPECIFIED ALL DIMENSIONS ARE:
FRACTIONAL ± 1/64"
DECIMAL ± .005"
ANGULAR ± 0° 30'

SUPERSEDED BY
SUPERSEDES
CORRECT FOR No.
FIRST INST. No.

OUTER COIL SPOOL

SMALL SURFACE MAGNETIC SUSCEPTIBILITY COILS

TEXACO Inc.
RESEARCH AND TECHNICAL DEPARTMENT
EXPLORATION AND PRODUCTION RESEARCH DIVISION
BELLAIRE, TEXAS

DE. DR. JAG TR.
CK. DATE: 6-19-61
SCALE: FULL
ASSEMBLY No. U9481

U9483 25

RE-ORDER No. 61-475

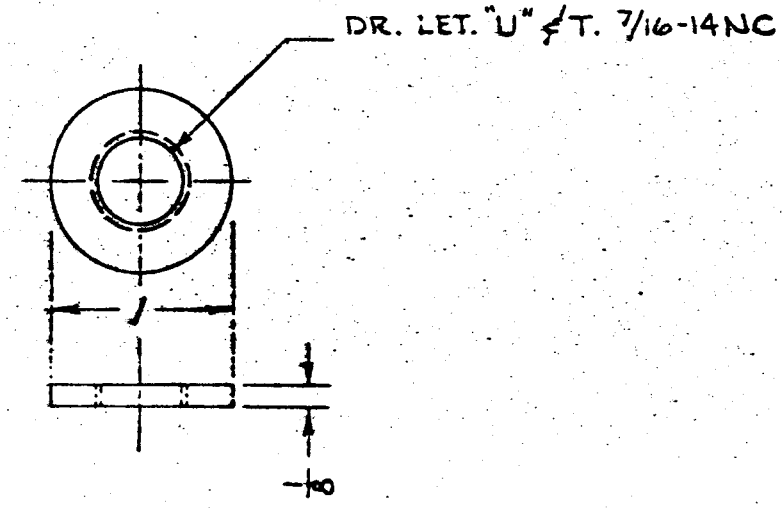

MATERIAL	SIZE	QUANT.	LET.	REVISIONS	DATE	BY
EPOXY GLASS		6				

UNLESS OTHERWISE SPECIFIED ALL DIMENSIONS ARE:
FRACTIONAL ± 1/64"
DECIMAL ± .005"
ANGULAR ± 0° 30'

SUPERSEDED BY
SUPERSEDES
CORRECT FOR No.
FIRST INST. No.

LOCK NUT
NULL COILS
SMALL SURFACE MAGNETIC
SUSCEPTIBILITY COILS

TEXACO Inc.
RESEARCH AND TECHNICAL DEPARTMENT
EXPLORATION AND PRODUCTION RESEARCH DIVISION
BELLAIRE, TEXAS

DE. DR. JAG TR.
CK. DATE: 6-20-61
SCALE: FULL
ASSEMBLY No. U9496

U9484

RECORDER No. 61-475

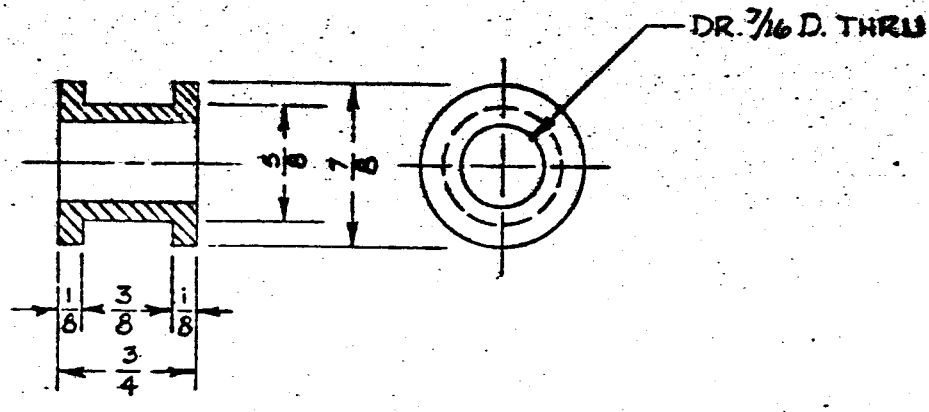

EPOXY GLASS		3				
MATERIAL	SIZE	QUANT.	LET.	REVISIONS	DATE	BY

UNLESS OTHERWISE SPECIFIED ALL DIMENSIONS ARE:
FRACTIONAL ± 1/64"
DECIMAL ± .005"
ANGULAR ± 0° 30'

SUPERSEDED BY
SUPERSEDES
CORRECT FOR No.
FIRST INST. No.

COIL SPOOL
NULL COILS
SMALL SURFACE MAGNETIC
SUSCEPTIBILITY COILS

TEXACO Inc.
RESEARCH AND TECHNICAL DEPARTMENT
EXPLORATION AND PRODUCTION RESEARCH DIVISION
BELLAIRE, TEXAS

DE. DR. JAG TR.
CK. DATE: 6-20-61
SCALE: FULL
ASSEMBLY No. U9496

U9485

REGISTER No. 61-475

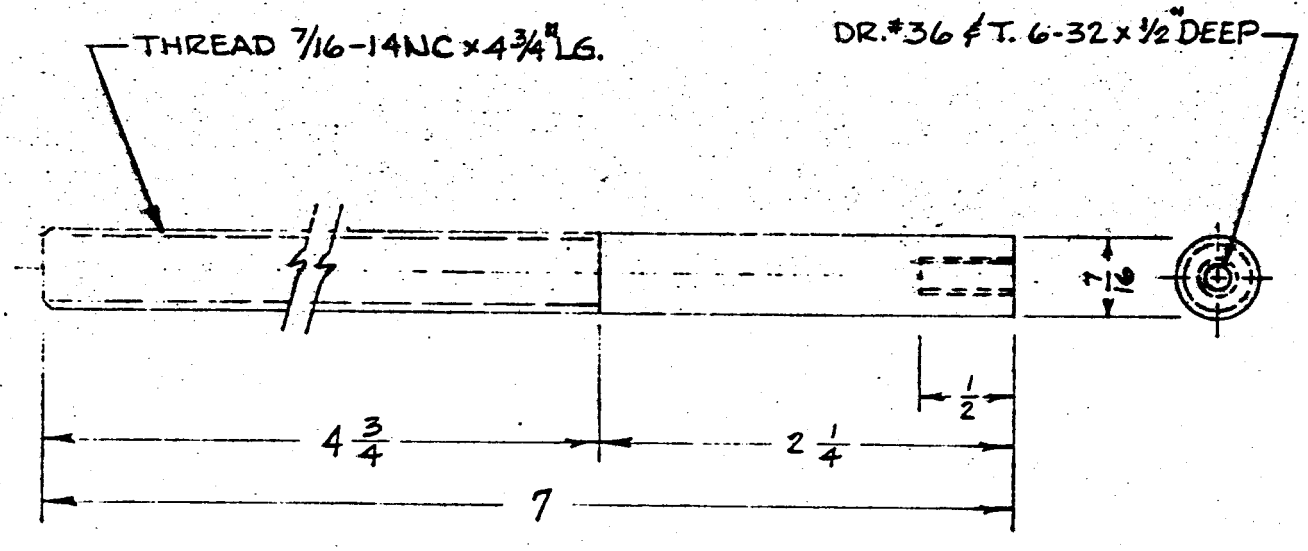

MATERIAL	SIZE	QUANT.	LET.	REVISIONS	DATE	BY
EPOXY GLASS		1				

UNLESS OTHERWISE SPECIFIED ALL DIMENSIONS ARE:
FRACTIONAL ± 1/64"
DECIMAL ± .005"
ANGULAR ± 0° 30'

SUPERSEDED BY
SUPERSEDES
CORRECT FOR No.
FIRST INST. No

NULL COIL HOLDING ROD

SMALL SURFACE MAGNETIC SUSCEPTIBILITY COILS

TEXACO INC.
RESEARCH AND TECHNICAL DEPARTMENT
EXPLORATION AND PRODUCTION RESEARCH DIVISION
BELLAIRE, TEXAS

DE. DR. JAG TR.
CK. DATE: 6-20-61
SCALE: FULL
ASSEMBLY No. U9496

U9486 28

RECORDER No. 61-475

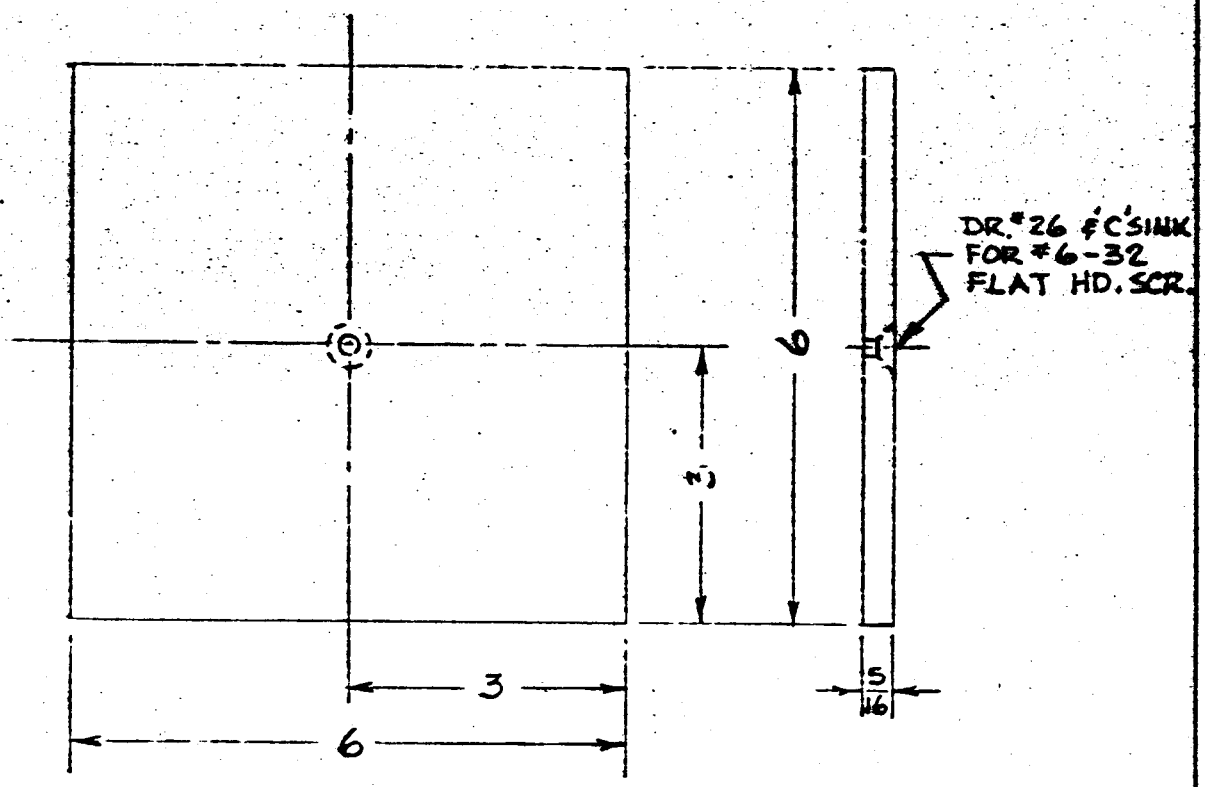

MATERIAL	SIZE	QUANT.	LET.	REVISIONS	DATE	BY
EPOXY GLASS	6"x6"x5/16" THK.	1				

UNLESS OTHERWISE SPECIFIED ALL DIMENSIONS ARE:
FRACTIONAL ± 1/64"
DECIMAL ± .005"
ANGULAR ± 0° 30'

SUPERSEDED BY

SUPERSEDES

CORRECT FOR No.

FIRST INST. No.

BASE FOR NULL COILS

SMALL SURFACE MAGNETIC SUSCEPTIBILITY COILS

TEXACO Inc.
RESEARCH AND TECHNICAL DEPARTMENT
EXPLORATION AND PRODUCTION RESEARCH DIVISION
BELLAIRE, TEXAS

DE. DR. JAG TR.
CK. DATE: 6-20-61
SCALE. 1/2 SIZE
ASSEMBLY No. U9496

U9487 29

RE-ORDER No. 61-475

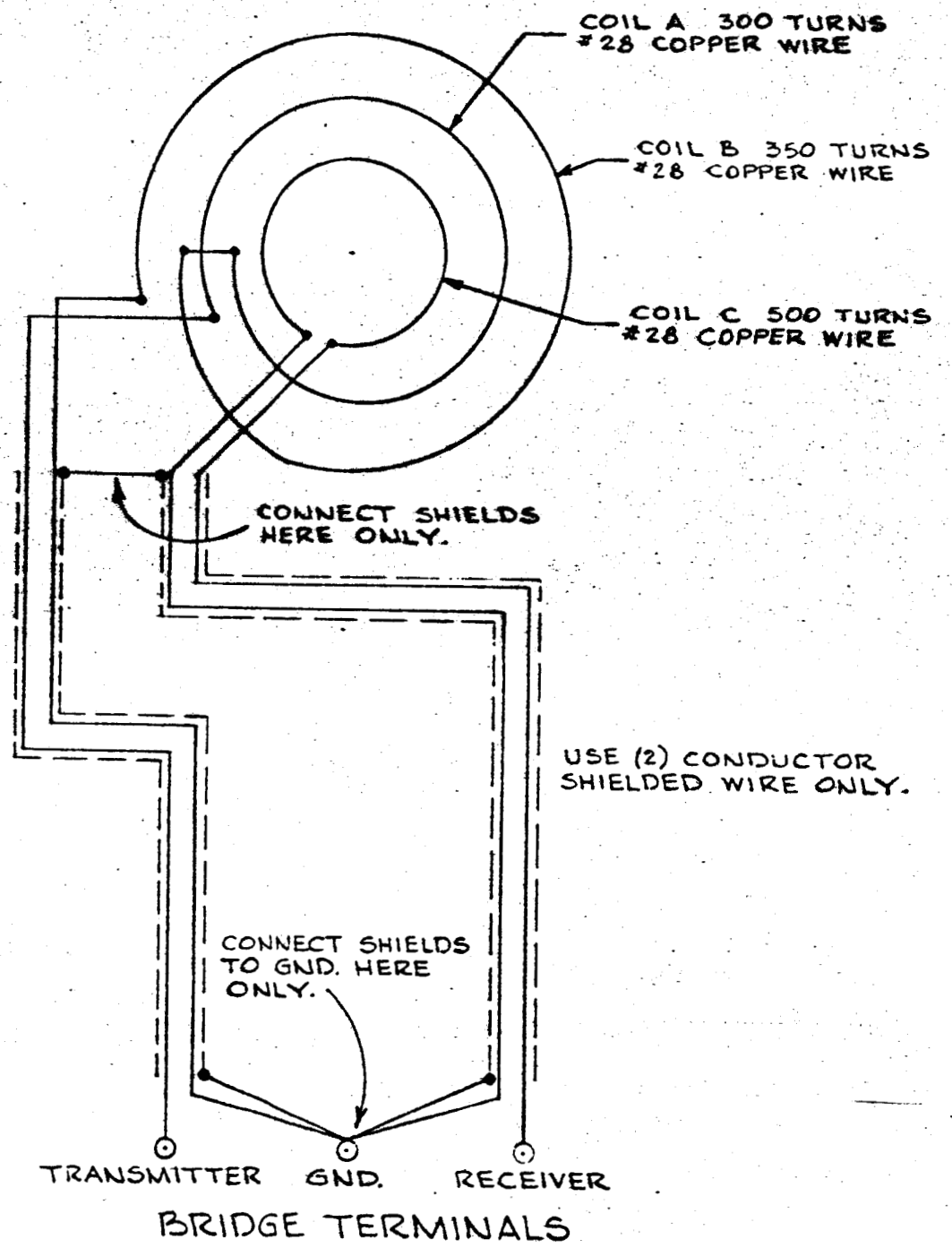

BRIDGE TERMINALS

MATERIAL	SIZE	QUANT.	LET.	REVISIONS	DATE	BY

UNLESS OTHERWISE SPECIFIED ALL DIMENSIONS ARE:
FRACTIONAL ± 1/64"
DECIMAL ± .005"
ANGULAR ± 0° 30'

SUPERSEDED BY
SUPERSEDES
CORRECT FOR NO.
FIRST INST. NO.

ELECTRIAL WIRING DIAGRAM

LARGE SURFACE MAGNETIC SUSCEPTIBILITY COILS

TEXACO Inc.
RESEARCH AND TECHNICAL DEPARTMENT
EXPLORATION AND PRODUCTION RESEARCH DIVISION
BELLAIRE, TEXAS

DE. DR. JAG TR.
CK. DATE: 6-20-61
SCALE: CIRCUIT
ASSEMBLY NO. U9489

U9488

ORDER No 61-475

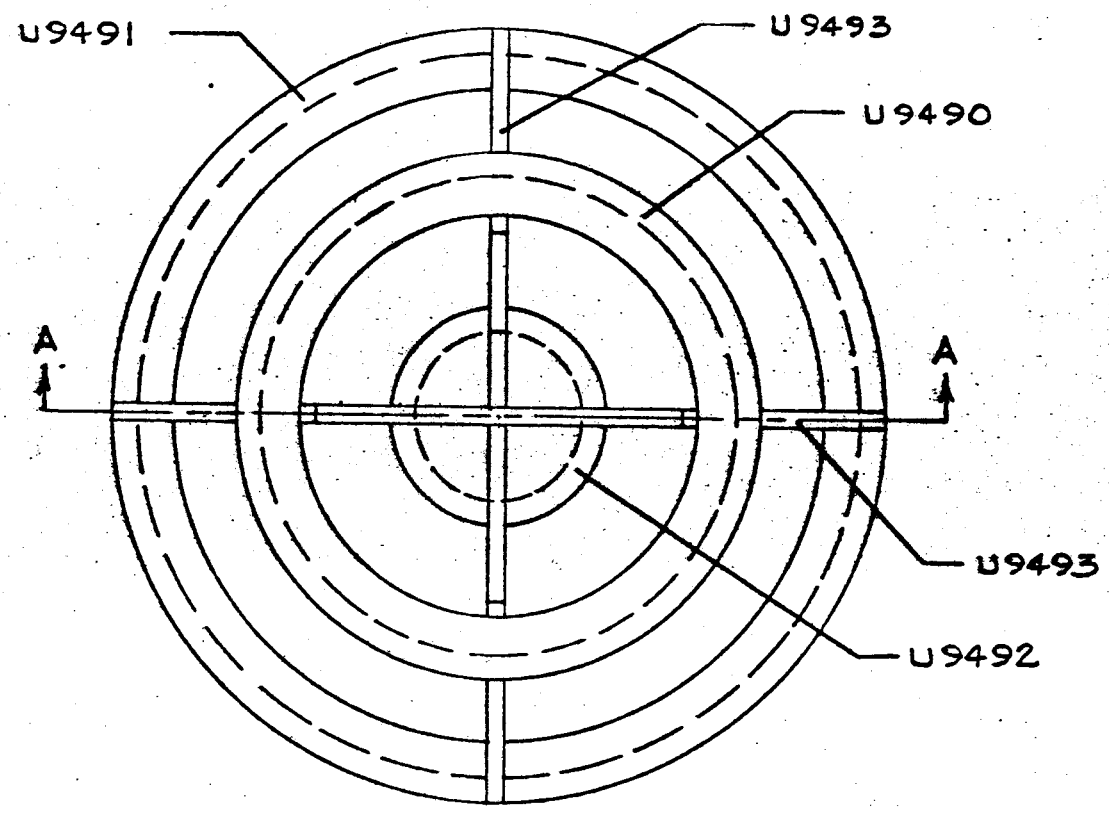

TOP VIEW

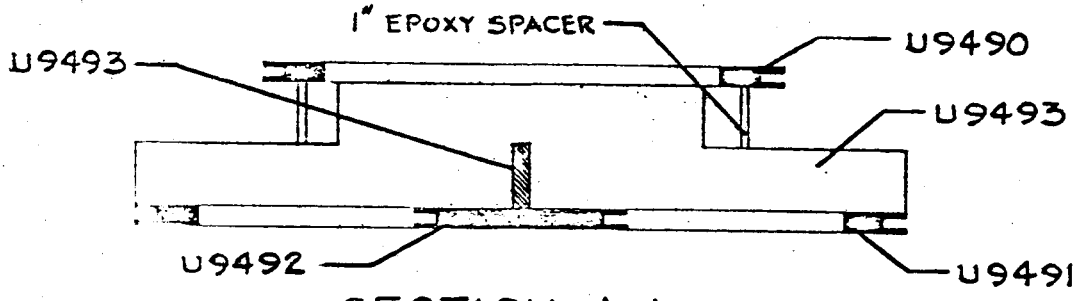

SECTION A-A

(NOTE: ASSEMBLE WITH BRASS SCREWS ONLY.)

MATERIAL	SIZE	QUANT.	LET.	REVISIONS	DATE	BY

UNLESS OTHERWISE SPECIFIED ALL DIMENSIONS ARE:
FRACTIONAL ± 1/64"
DECIMAL ± .005"
ANGULAR ± 0° 30'

SUPERSEDED BY
SUPERSEDES
CORRECT FOR NO.
FIRST INST. NO.

LARGE COILS-ASSEMBLY

LARGE SURFACE MAGNETIC SUSCEPTIBILITY COILS

TEXACO Inc.
RESEARCH AND TECHNICAL DEPARTMENT
EXPLORATION AND PRODUCTION RESEARCH DIVISION
BELLAIRE, TEXAS

DE. DR. JAG TR.
CK. DATE: 6-22-61
SCALE: 1/3 SIZE
ASSEMBLY NO. U9489

U9489 31

RE-ORDER No. 61-475

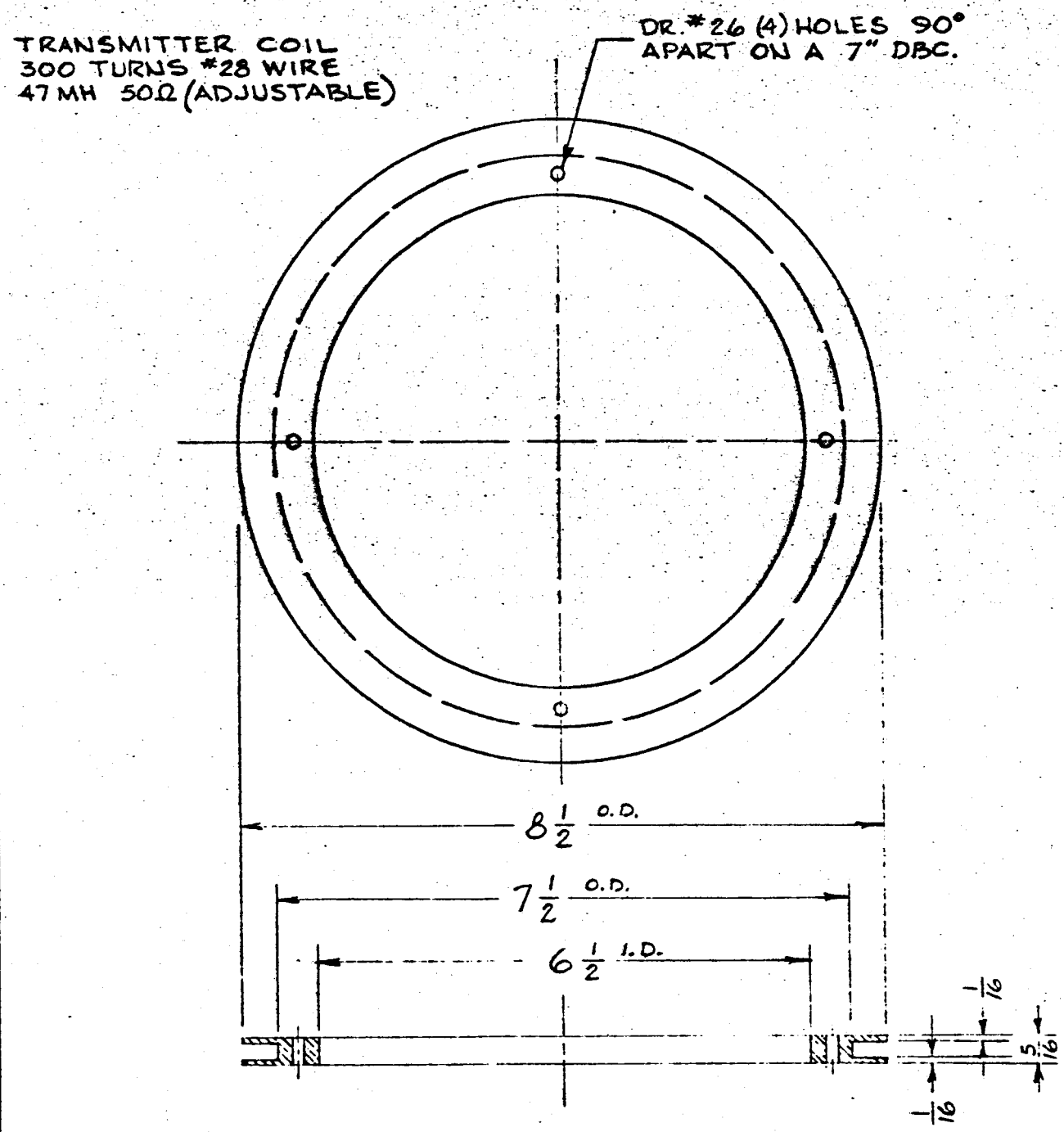

MATERIAL	SIZE	QUANT.	LET.	REVISIONS	DATE	BY
EPOXY GLASS	5/16 THK. × 8 1/2 DIA.	1				

UNLESS OTHERWISE SPECIFIED ALL DIMENSIONS ARE:
FRACTIONAL ± 1/64"
DECIMAL ± .005"
ANGULAR ± 0° 30'

SUPERSEDED BY
SUPERSEDES
CORRECT FOR No.
FIRST INST. No

COIL SPOOL "A"

LARGE SURFACE MAGNETIC SUSCEPTIBILITY COILS

TEXACO Inc.
RESEARCH AND TECHNICAL DEPARTMENT
EXPLORATION AND PRODUCTION RESEARCH DIVISION
BELLAIRE, TEXAS

DE. DR. JAG TR.
CK. DATE: 6-21-61
SCALE: 1" = 1/2"
ASSEMBLY No. U9489

U9490

32

ORDER No. 61-475

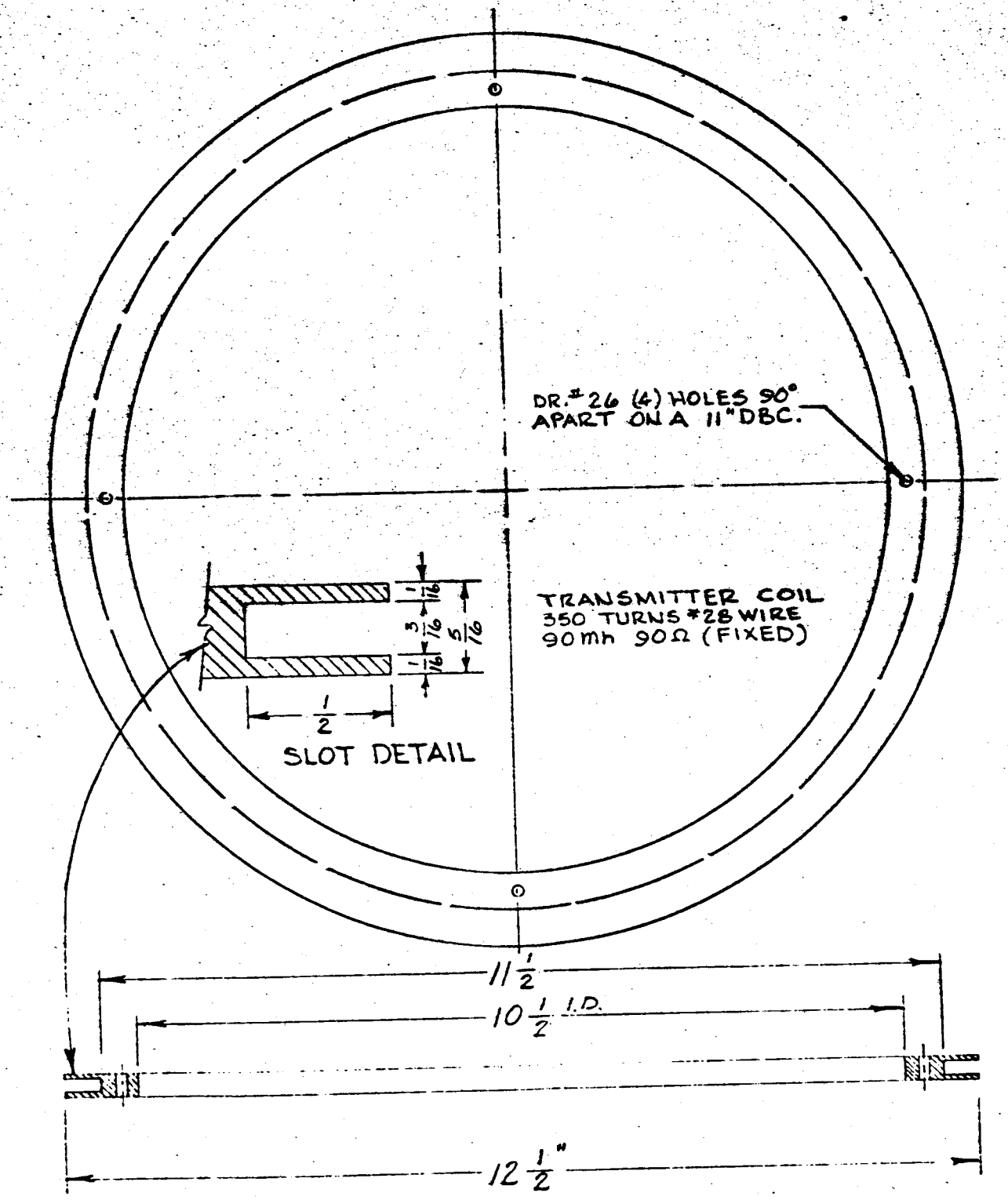

MATERIAL	SIZE	QUANT.	LET.	REVISIONS	DATE	BY
EPOXY GLASS	5/16 THK. x 12 1/2 DIA.	1				

UNLESS OTHERWISE SPECIFIED ALL DIMENSIONS ARE:
FRACTIONAL ± 1/64"
DECIMAL ± .005"
ANGULAR ± 0° 30'

SUPERSEDED BY
SUPERSEDES
CORRECT FOR NO.
FIRST INST. NO.

COIL SPOOL "B"

LARGE SURFACE MAGNETIC SUSCEPTIBILITY COILS

TEXACO Inc.
RESEARCH AND TECHNICAL DEPARTMENT
EXPLORATION AND PRODUCTION RESEARCH DIVISION
BELLAIRE, TEXAS

DE. DR. JAG TR.
CK. DATE: 6-20-61
SCALE: 1" = 1/2"
ASSEMBLY NO. U9489

U9491 33

RE-ORDER No. 61-475

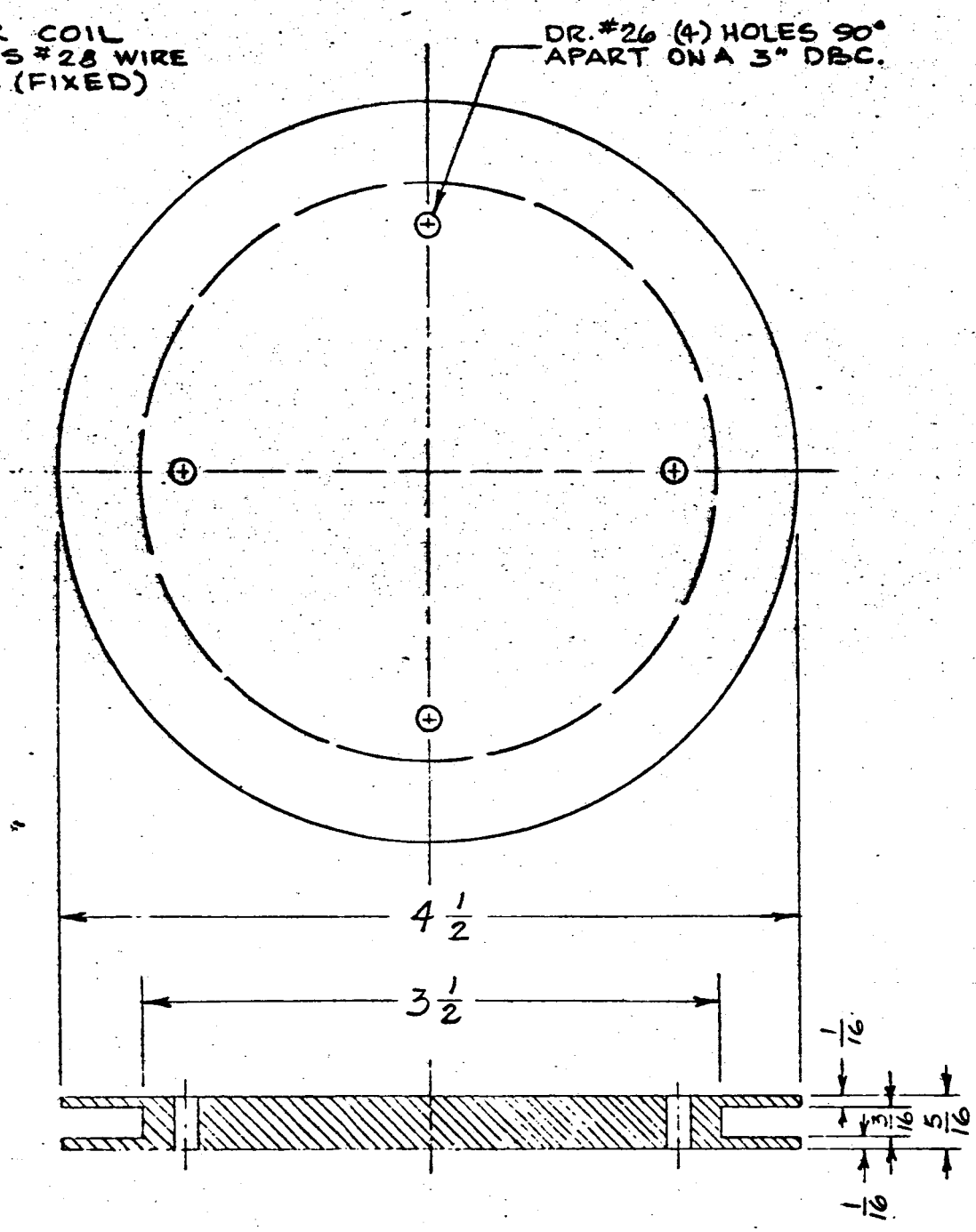

MATERIAL	SIZE	QUANT.	LET.	REVISIONS	DATE	BY
EPOXY GLASS	5/16 THK. × 4½" DIA.	1				

UNLESS OTHERWISE SPECIFIED ALL DIMENSIONS ARE:
FRACTIONAL ± 1/64"
DECIMAL ± .005"
ANGULAR ± 0° 30'

SUPERSEDED BY
SUPERSEDES
CORRECT FOR No.
FIRST INST. No.

COIL SPOOL "C"

LARGE SURFACE MAGNETIC SUSCEPTIBILITY COILS

TEXACO Inc.
RESEARCH AND TECHNICAL DEPARTMENT
EXPLORATION AND PRODUCTION RESEARCH DIVISION
BELLAIRE, TEXAS

DE. DR. JAG TR.
CK. DATE: 6-21-61
SCALE: FULL
ASSEMBLY No. U9489

U9492 34

RE-ORDER No. 61-475

(DR. #36 & T. #6-32 ALL HOLES UNLESS NOTED)

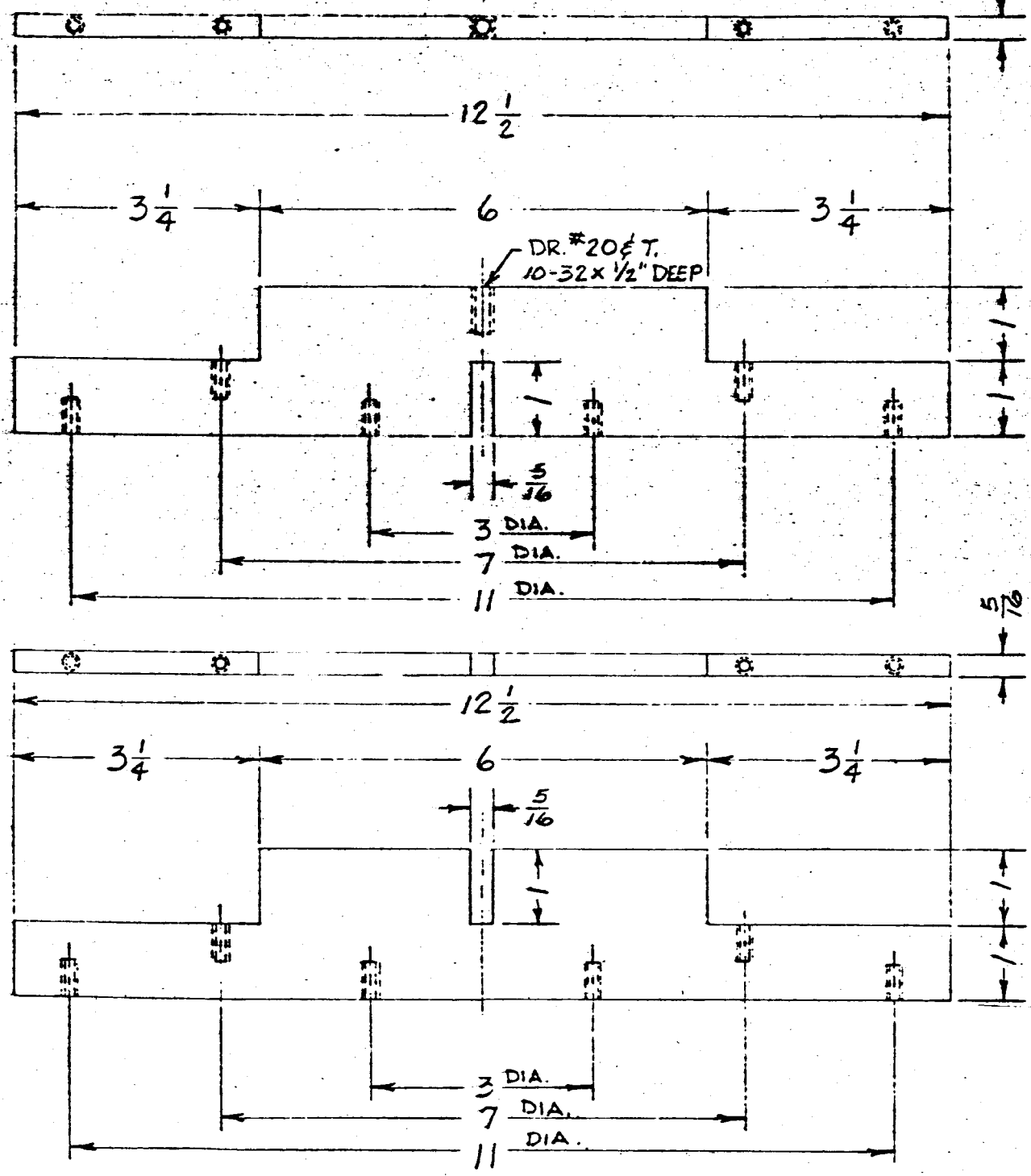

MATERIAL	SIZE	QUANT.	LET.	REVISIONS	DATE	BY
EPOXY GLASS		1 EA.				

UNLESS OTHERWISE SPECIFIED ALL DIMENSIONS ARE:
FRACTIONAL ± 1/64"
DECIMAL ± .005"
ANGULAR ± 0° 30'

SUPERSEDED BY
SUPERSEDES
CORRECT FOR NO.
FIRST INST. NO.

HOLDERS FOR COIL SPOOLS

LARGE SURFACE MAGNETIC SUSCEPTIBILITY COILS

DE. DR. JAG TR.
CK. DATE: 6-21-61
SCALE: 1/2 SIZE
ASSEMBLY NO. U9489

TEXACO Inc.
RESEARCH AND TECHNICAL DEPARTMENT
EXPLORATION AND PRODUCTION RESEARCH DIVISION
BELLAIRE, TEXAS

U9493

RECORDER No. 61-475

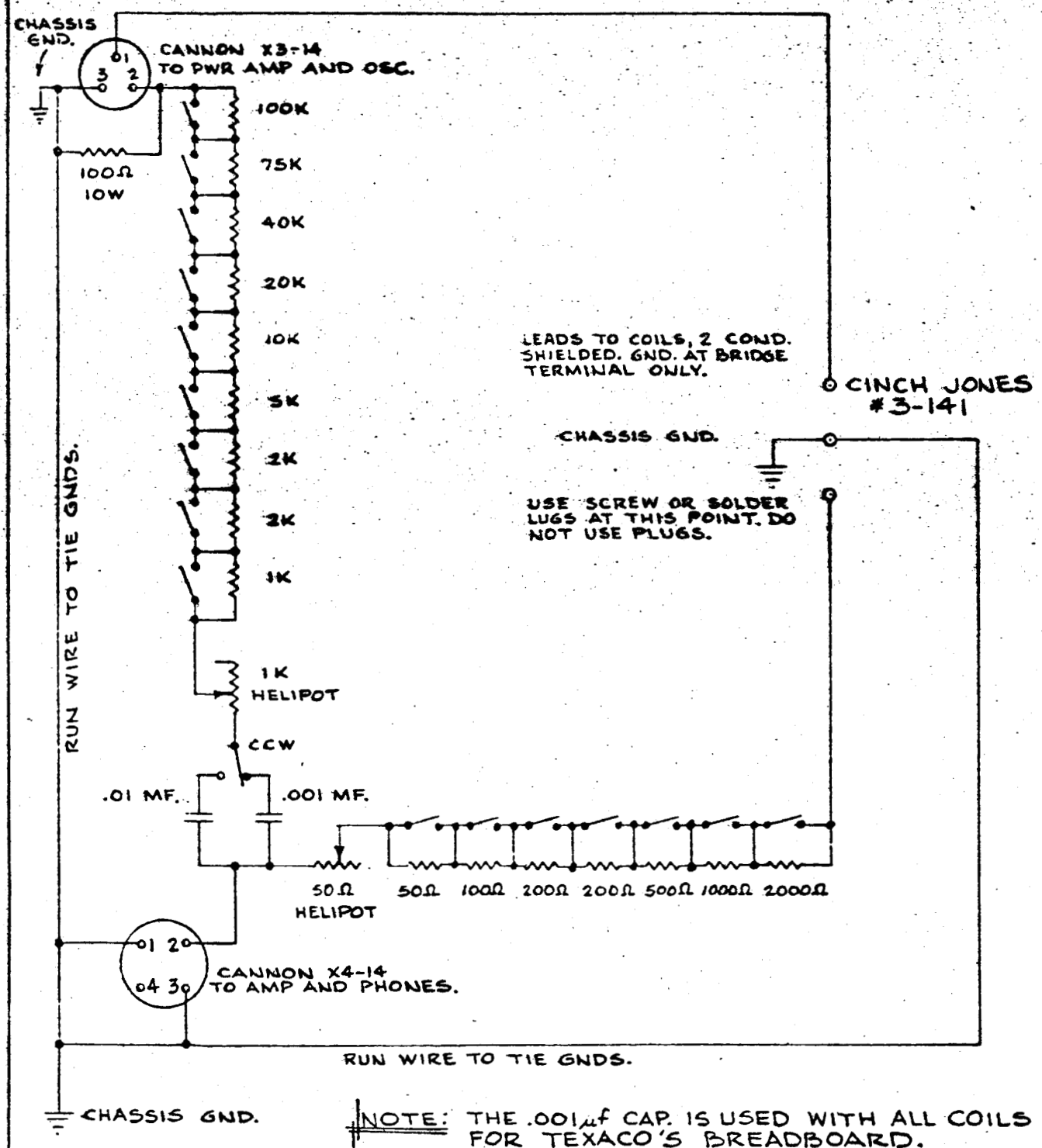

NOTE: THE .001μf CAP. IS USED WITH ALL COILS FOR TEXACO'S BREADBOARD.

MATERIAL	SIZE	QUANT.	LET.	REVISIONS	DATE	BY

UNLESS OTHERWISE SPECIFIED ALL DIMENSIONS ARE:
FRACTIONAL ± 1/64"
DECIMAL ± .005"
ANGULAR ± 0° 30'

SUPERSEDED BY
SUPERSEDES
CORRECT FOR No.
FIRST INST. No.

BRIDGE CIRCUIT DIAGRAM SURFACE AND SUBSURFACE MAGNETIC SUSCEPTIBILITY MEASUREMENTS

TEXACO Inc.
RESEARCH AND TECHNICAL DEPARTMENT
EXPLORATION AND PRODUCTION RESEARCH DIVISION
BELLAIRE, TEXAS

DE. DR. TR. JAG
CK. DATE: 5-26-61
SCALE: CIRCUIT
ASSEMBLY No.
U9494

RECORDER No. 61-475

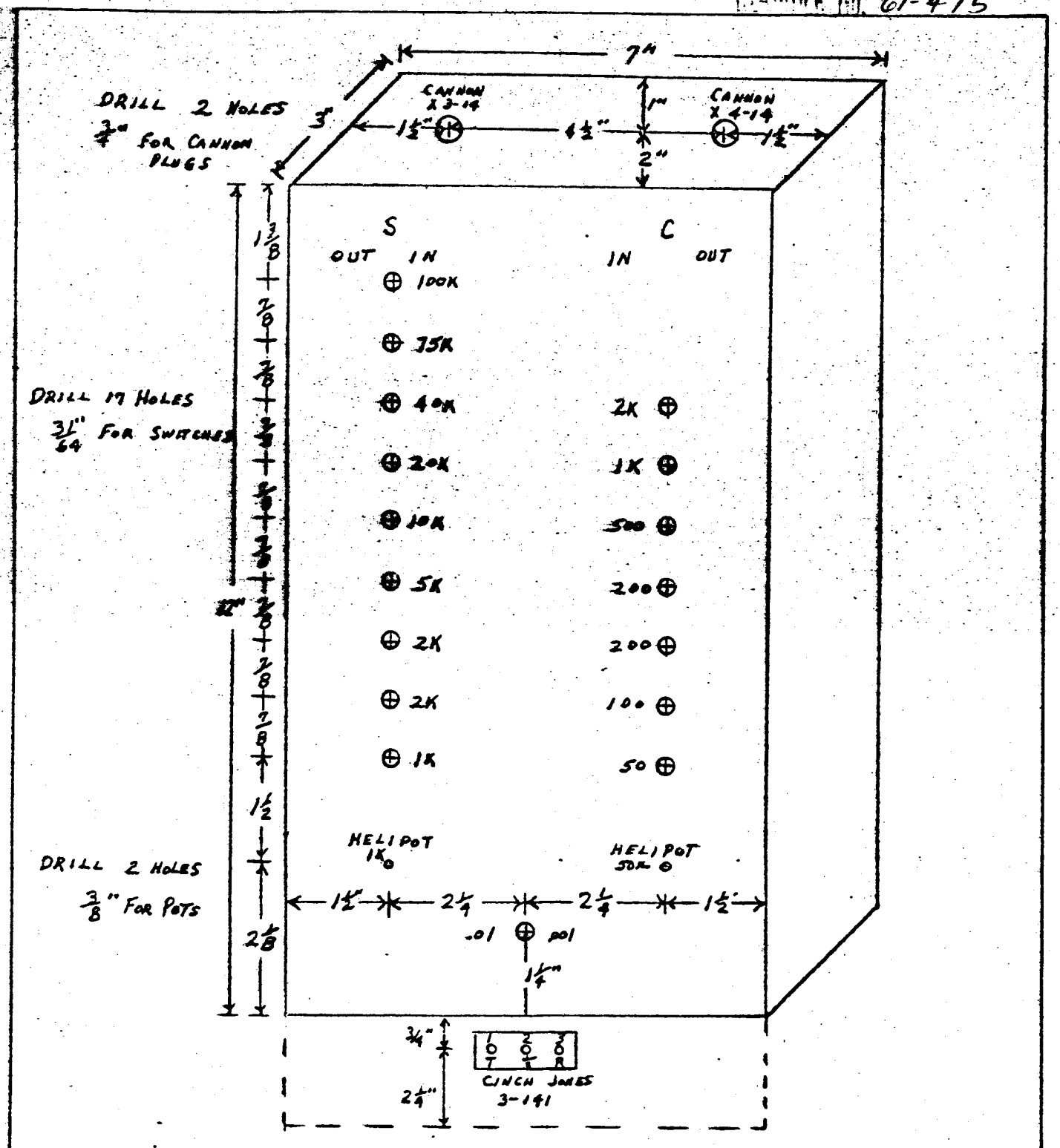

6-20-61

MATERIAL	SIZE	QUANT.	LET.	REVISIONS	DATE	BY

UNLESS OTHERWISE SPECIFIED ALL DIMENSIONS ARE:
FRACTIONAL ± 1/64"
DECIMAL ± .005"
ANGULAR ± 0° 30'

SUPERSEDED BY
SUPERSEDES
CORRECT FOR NO.
FIRST INST. NO.

LAYOUT DIAGRAM FOR BRIDGE SURFACE AND SUBSURFACE MAGNETIC SUSCEPTIBILITY MEASUREMENTS

DE. DR. GJG TR.
CK. DATE: 6-20-61
SCALE: NONE
ASSEMBLY NO.

TEXACO Inc.
RESEARCH AND TECHNICAL DEPARTMENT
EXPLORATION AND PRODUCTION RESEARCH DIVISION
BELLAIRE, TEXAS

U9495

REORDER No. 61-475

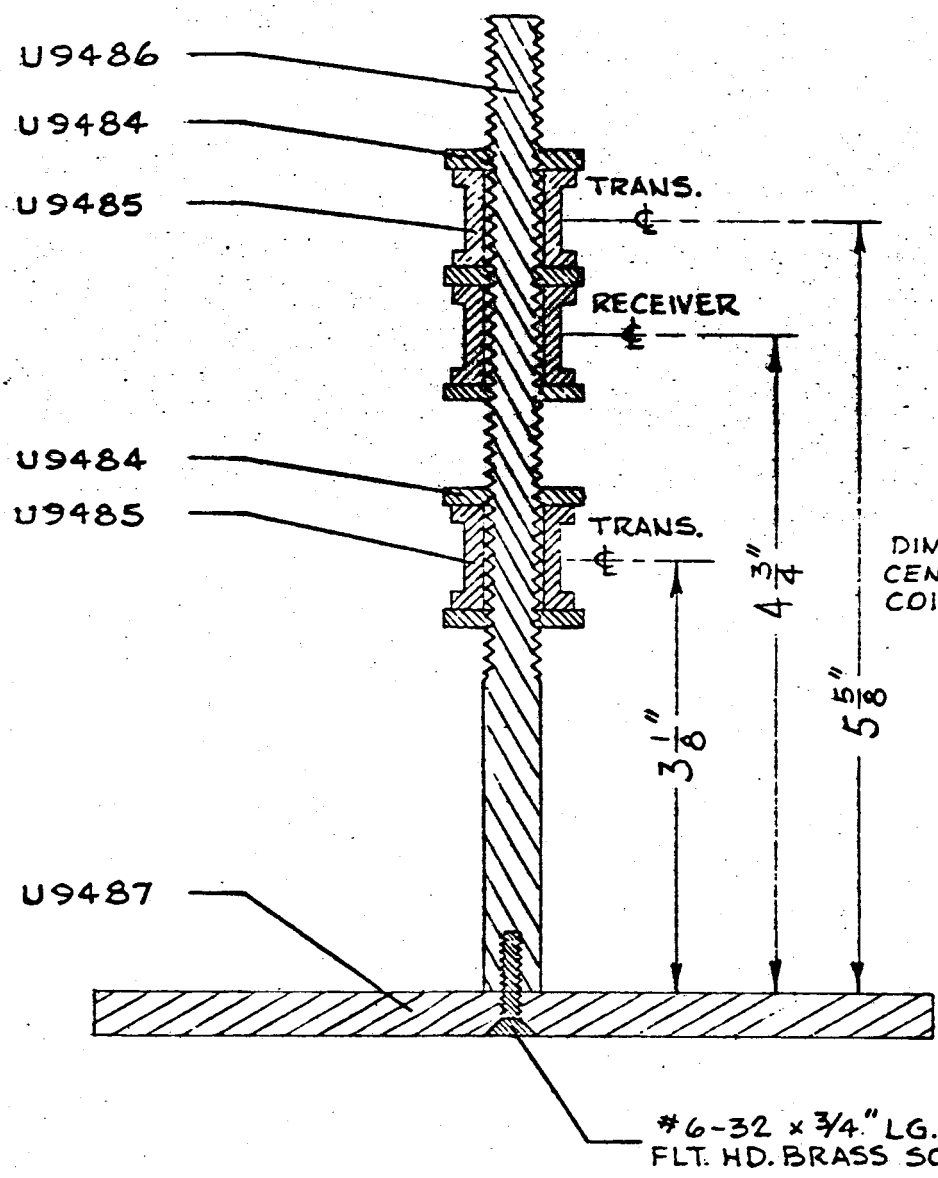

NOTE
DIMENSIONS TO CENTER LINES OF COILS ARE APPROX.

(FOR CIRCUIT SEE U9480)

MATERIAL	SIZE	QUANT.	LET.	REVISIONS	DATE	BY

UNLESS OTHERWISE SPECIFIED ALL DIMENSIONS ARE:
FRACTIONAL ± 1/64"
DECIMAL ± .005"
ANGULAR ± 0° 30'

SUPERSEDED BY
SUPERSEDES
CORRECT FOR No.
FIRST INST. No.

NULL COILS-ASSEMBLY

SMALL SURFACE MAGNETIC SUSCEPTIBILITY COILS

TEXACO Inc.
RESEARCH AND TECHNICAL DEPARTMENT
EXPLORATION AND PRODUCTION RESEARCH DIVISION
BELLAIRE, TEXAS

DE. DR. JAG TR.
CK. DATE: 6-23-61
SCALE: 3/4" = 1"
ASSEMBLY No. U9496

U9496

INDEXED No 61-475

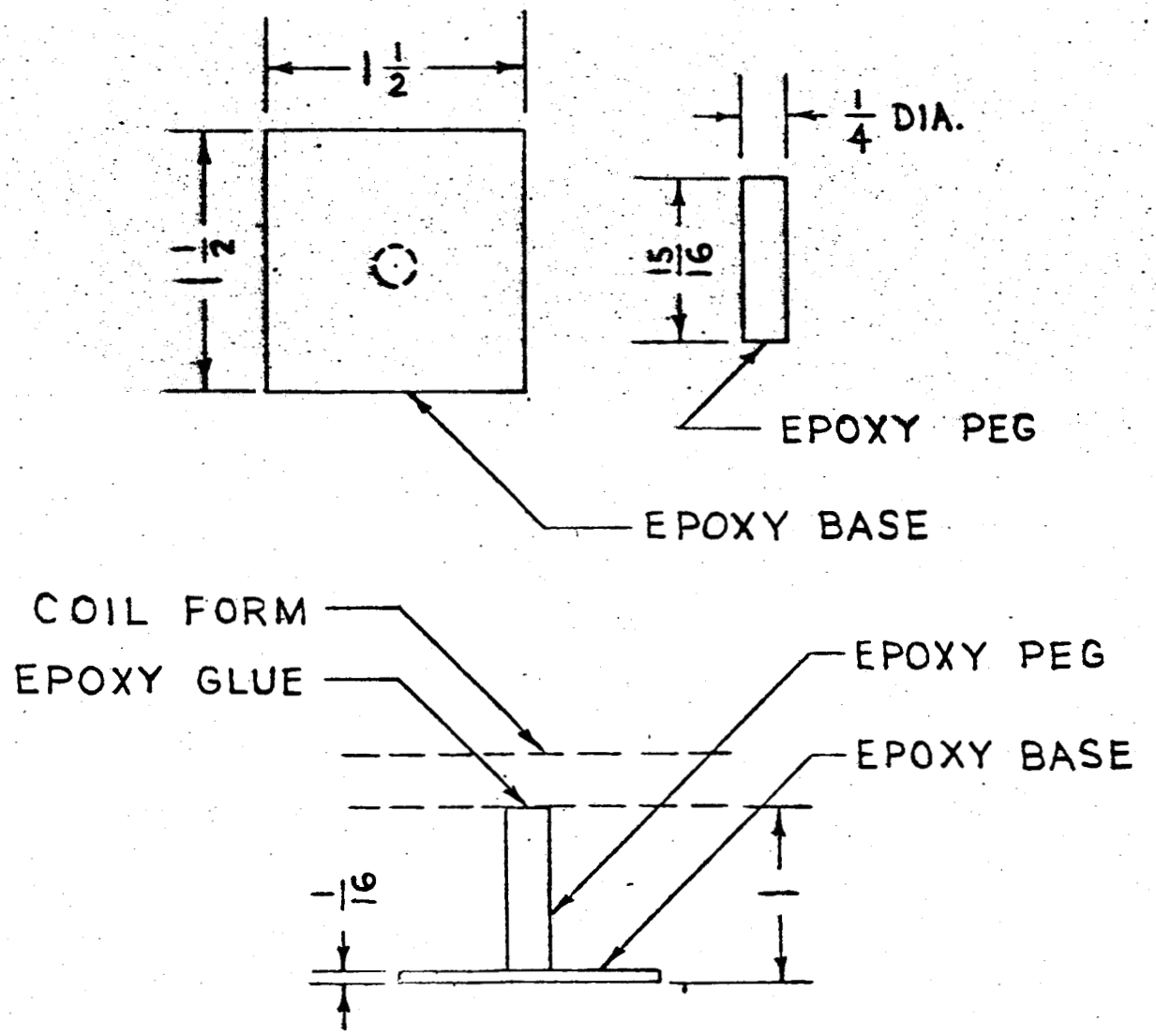

EPOXY GLASS		4				
MATERIAL	SIZE	QUANT.	LET.	REVISIONS	DATE	BY

UNLESS OTHERWISE SPECIFIED ALL DIMENSIONS ARE:
FRACTIONAL ± 1/64"
DECIMAL ± .005"
ANGULAR ± 0° 30'

SUPERSEDED BY
SUPERSEDES
CORRECT FOR No.
FIRST INST. No.

PEAKING SPACERS
LARGE SURFACE MAGNETIC
SUSCEPTIBILITY COILS

TEXACO Inc.
RESEARCH AND TECHNICAL DEPARTMENT
EXPLORATION AND PRODUCTION RESEARCH DIVISION
BELLAIRE, TEXAS

DE. DR. JNA TR.
CK. DATE: 7-18-61
SCALE: FULL
ASSEMBLY No. U 9489

U9558 39

PROJECT No 61-475

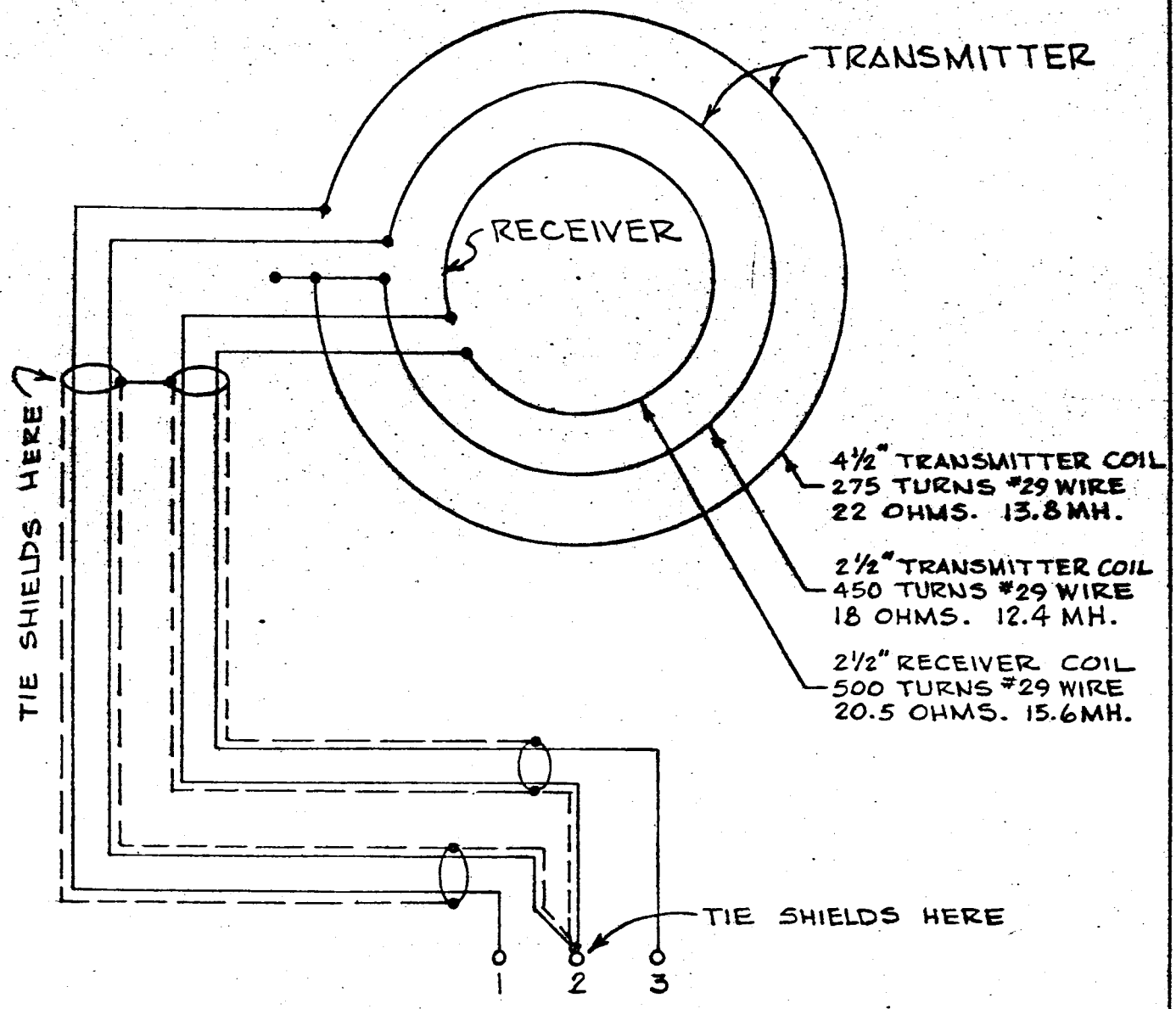

MATERIAL	SIZE	QUANT.	LET.	REVISIONS	DATE	BY

UNLESS OTHERWISE SPECIFIED ALL DIMENSIONS ARE:
FRACTIONAL ± 1/64"
DECIMAL ± .005"
ANGULAR ± 0° 30'

SUPERSEDED BY
SUPERSEDES
CORRECT FOR NO.
FIRST INST. NO.

ELECTRICAL WIRING DIAGRAM
MEDIUM SURFACE MAGNETIC
SUSCEPTIBILITY COILS

DE. DR. JAG TR.
CK. DATE: 7-17-61
SCALE: CIRCUIT
ASSEMBLY No. U9560

TEXACO Inc.
RESEARCH AND TECHNICAL DEPARTMENT
EXPLORATION AND PRODUCTION RESEARCH DIVISION
BELLAIRE, TEXAS

U9559 40

RE-ORDER No. 61-475

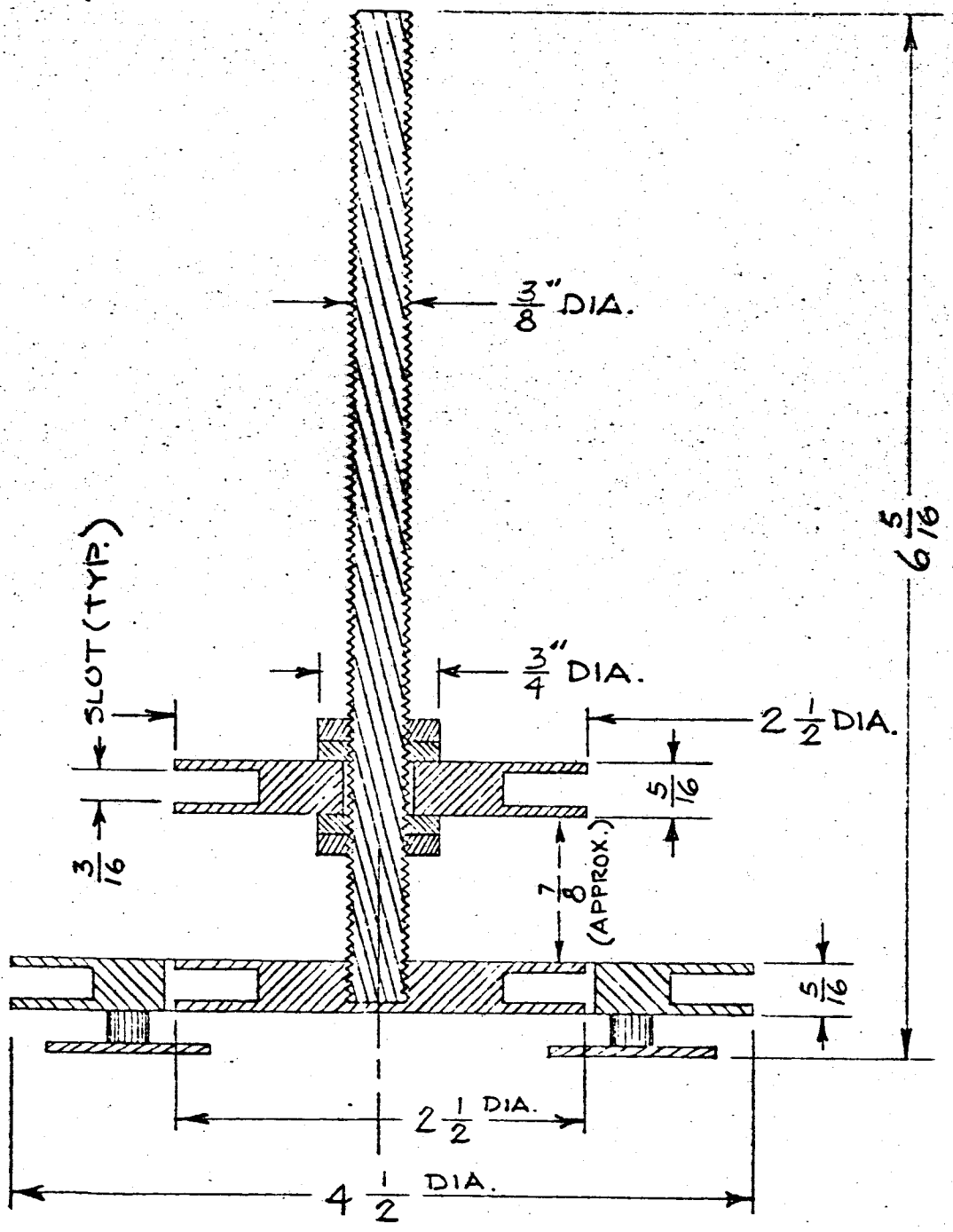

MATERIAL	SIZE	QUANT.	LET.	REVISIONS	DATE	BY

UNLESS OTHERWISE SPECIFIED ALL DIMENSIONS ARE:
FRACTIONAL ± 1/64"
DECIMAL ± .005"
ANGULAR ± 0° 30'

SUPERSEDED BY
SUPERSEDES
CORRECT FOR NO.
FIRST INST. NO.

ASSEMBLY OF MEDIUM SURFACE COILS
MEDIUM SURFACE MAGNETIC SUSCEPTIBILITY COILS

TEXACO Inc.
RESEARCH AND TECHNICAL DEPARTMENT
EXPLORATION AND PRODUCTION RESEARCH DIVISION
BELLAIRE, TEXAS

DE. DR. JAG TR.
CK DATE 7-18-61
SCALE FULL
ASSEMBLY No U9560

U9560 41

RE-ORDER No. 61-475

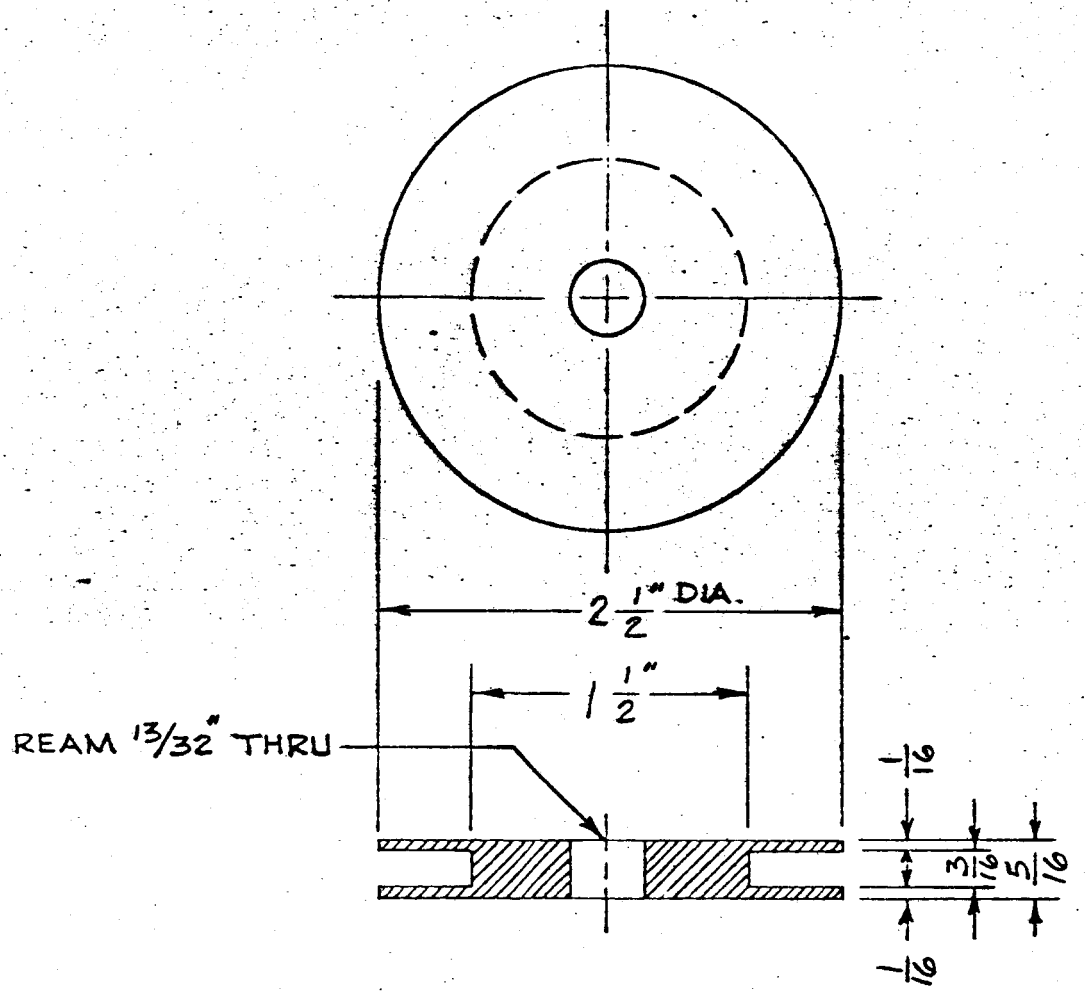

450 TURNS #29 WIRE
18 OHMS 12.4 MH.

MATERIAL	SIZE	QUANT.	LET.	REVISIONS	DATE	BY
EPOXY GLASS		1				

UNLESS OTHERWISE SPECIFIED ALL DIMENSIONS ARE:
FRACTIONAL ± 1/64"
DECIMAL ± .005"
ANGULAR ± 0° 30'

SUPERSEDED BY
SUPERSEDES
CORRECT FOR No.
FIRST INST. No.

COIL SPOOL "A"
MEDIUM SURFACE MAGNETIC
SUSCEPTIBILITY COILS

TEXACO Inc.
RESEARCH AND TECHNICAL DEPARTMENT
EXPLORATION AND PRODUCTION RESEARCH DIVISION
BELLAIRE, TEXAS

DE. DR. JAG TR.
CK. DATE: 7-18-61
SCALE: FULL
ASSEMBLY No. U9560

U9561 42

ORDER No. 61-475

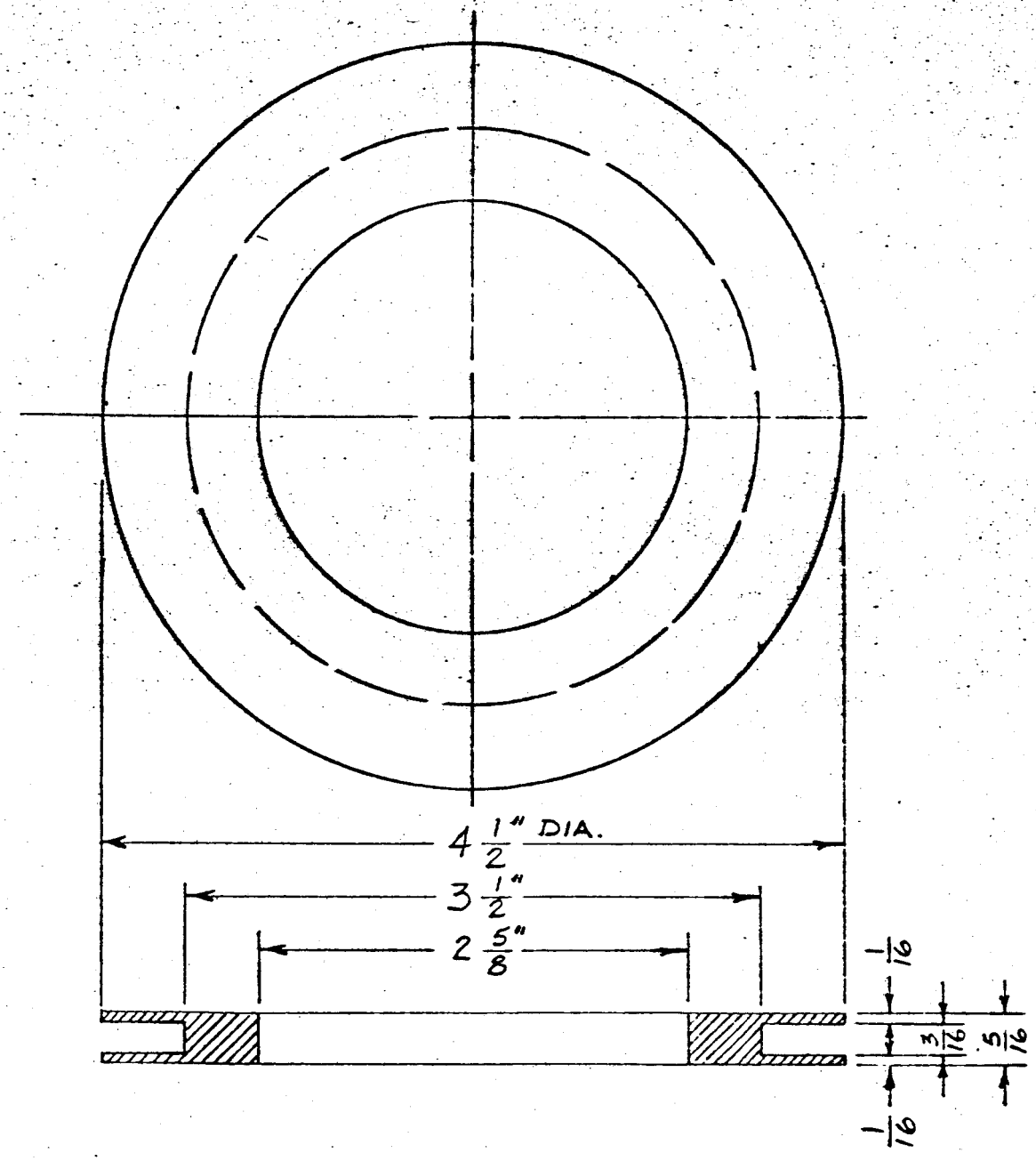

275 TURNS #29 WIRE
22 OHMS 13.8 MH.

MATERIAL	SIZE	QUANT.	LET.	REVISIONS	DATE	BY
EPOXY GLASS		1				

UNLESS OTHERWISE SPECIFIED ALL DIMENSIONS ARE:
FRACTIONAL ± 1/64"
DECIMAL ± .005"
ANGULAR ± 0° 30'

SUPERSEDED BY
SUPERSEDES
CORRECT FOR No.
FIRST INST. No.

COIL SPOOL "B"
MEDIUM SURFACE MAGNETIC SUSCEPTIBILITY COILS

DE. DR. JAG TR.
CK DATE 7-18-61
SCALE FULL
ASSEMBLY No U9560

TEXACO Inc.
RESEARCH AND TECHNICAL DEPARTMENT
EXPLORATION AND PRODUCTION RESEARCH DIVISION
BELLAIRE, TEXAS

U9562
43

DE ORDER No. 61-475

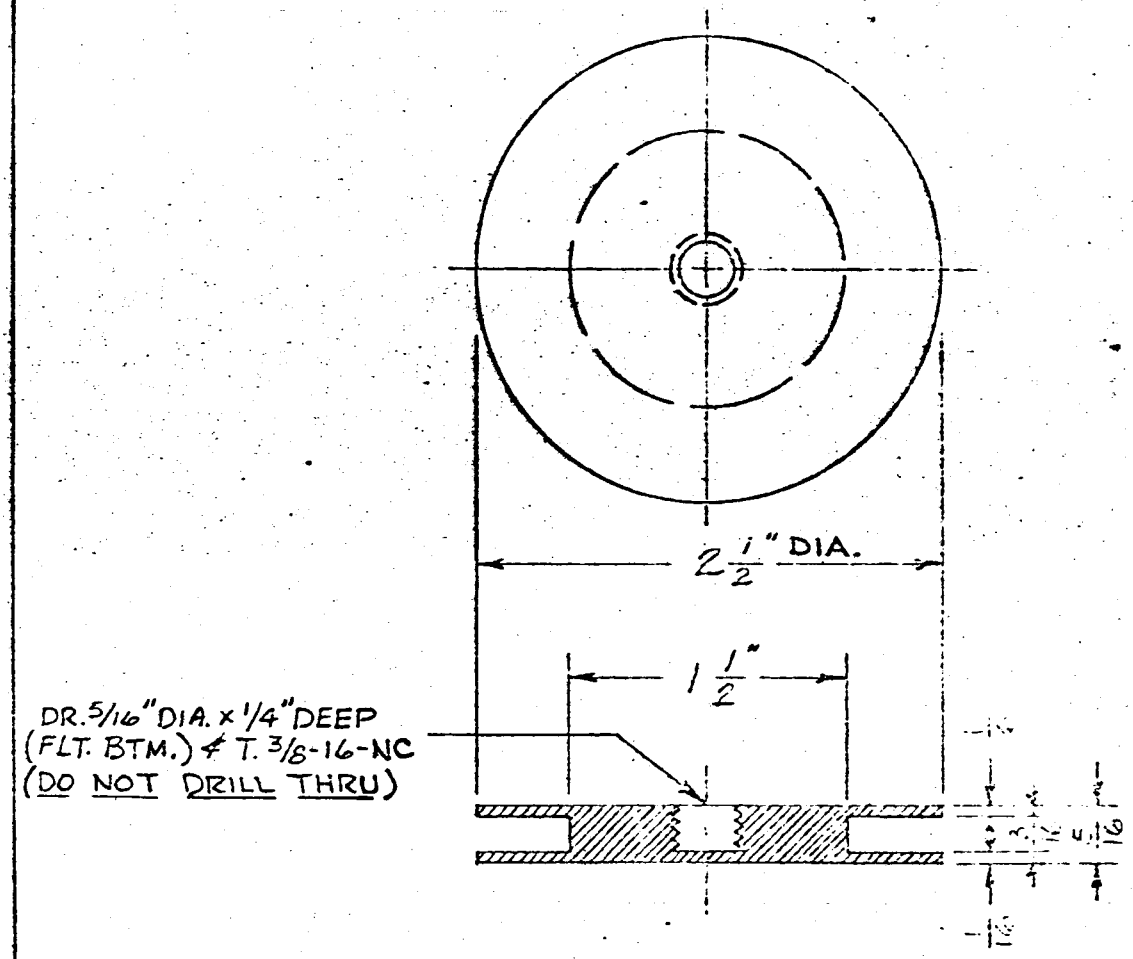

500 TURNS #29 WIRE
20.5 OHMS 15.6 MH.

EPOXY GLASS		1				
MATERIAL	SIZE	QUANT.	LET.	REVISIONS	DATE	BY

UNLESS OTHERWISE SPECIFIED ALL DIMENSIONS ARE:
FRACTIONAL ± 1/64"
DECIMAL ± .005"
ANGULAR ± 0° 30'

SUPERSEDED BY
SUPERSEDES
CORRECT FOR No.
FIRST INST. No.

COIL SPOOL "C"
MEDIUM SURFACE MAGNETIC
SUSCEPTIBILITY COILS

TEXACO Inc.
RESEARCH AND TECHNICAL DEPARTMENT
EXPLORATION AND PRODUCTION RESEARCH DIVISION
BELLAIRE, TEXAS

DE JAG
CK. DATE 7-12-61
SCALE FULL
ASSEMBLY No. U9560

U9563

44

RE-ORDER No 61-475

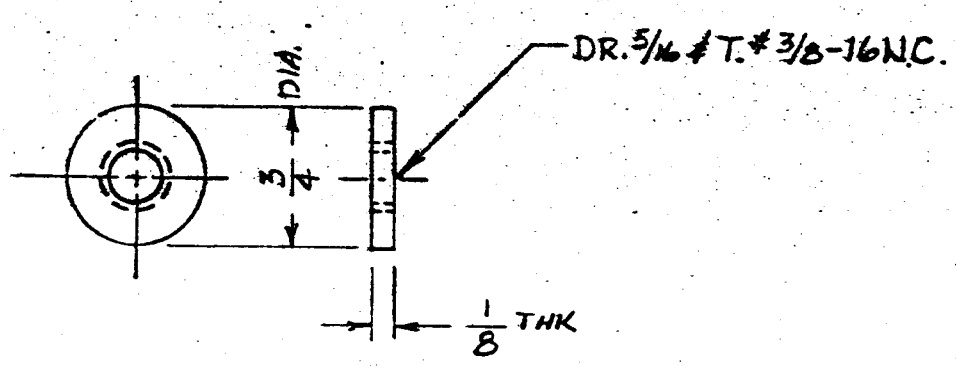

MATERIAL	SIZE	QUANT.	LET.	REVISIONS	DATE	BY
EPOXY GLASS ROD		4				

UNLESS OTHERWISE SPECIFIED ALL DIMENSIONS ARE:
FRACTIONAL ± 1/64"
DECIMAL ± .005"
ANGULAR ± 0° 30'

SUPERSEDED BY
SUPERSEDES
CORRECT FOR No.
FIRST INST. No.

LOCK NUT - NULL COIL "A"
MEDIUM SURFACE MAGNETIC
SUSCEPTIBILITY COILS

DE. DR. JAG TR.
CK. DATE: 7-17-61
SCALE: FULL
ASSEMBLY No U9560

TEXACO Inc.
RESEARCH AND TECHNICAL DEPARTMENT
EXPLORATION AND PRODUCTION RESEARCH DIVISION
BELLAIRE, TEXAS

U9564

REORDER No. 61-475

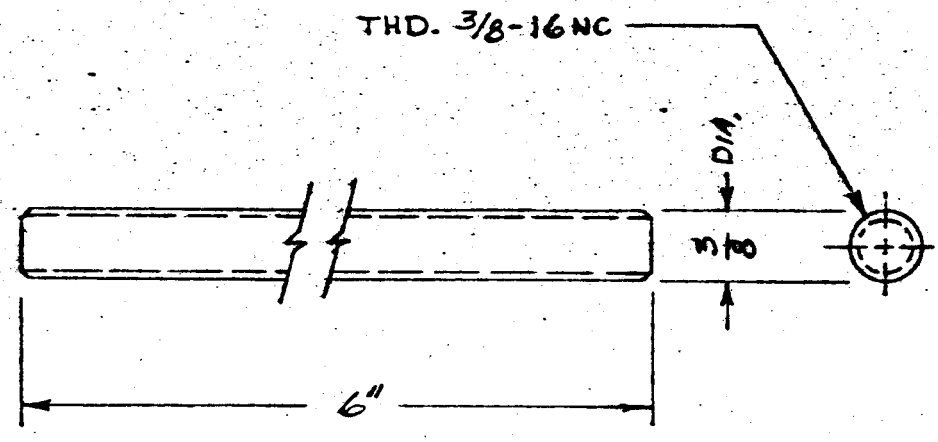

MATERIAL	SIZE	QUANT.	LET.	REVISIONS	DATE	BY
EPOXY GLASS ROD		1				

UNLESS OTHERWISE SPECIFIED ALL DIMENSIONS ARE:
FRACTIONAL ± 1/64"
DECIMAL ± .005"
ANGULAR ± 0° 30'

SUPERSEDED BY
SUPERSEDES
CORRECT FOR No.
FIRST INST. No.

NULL COIL "A" HOLDING ROD
MEDIUM SURFACE MAGNETIC
SUSCEPTIBILITY COILS

TEXACO Inc.
RESEARCH AND TECHNICAL DEPARTMENT
EXPLORATION AND PRODUCTION RESEARCH DIVISION
BELLAIRE, TEXAS

DE. DR. JAG TR.
CK. DATE: 7-17-61
SCALE: FULL
ASSEMBLY No. U9560

U9565 46

RE ORDER No 61-475

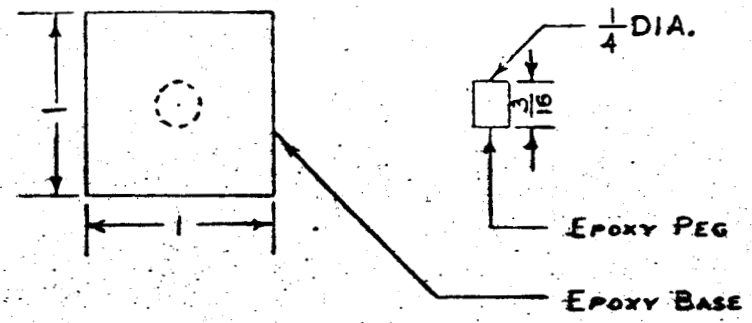

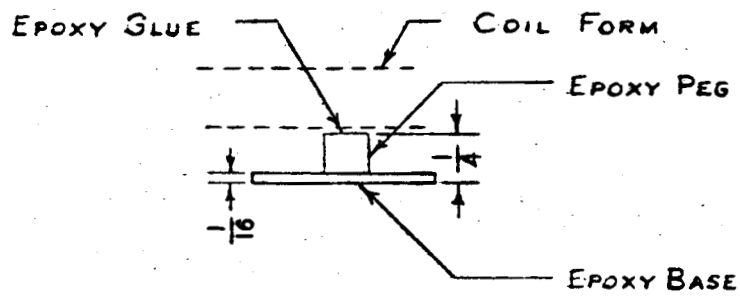

EPOXY GLASS	1/16" MATERIAL	4				
MATERIAL	SIZE	QUANT.	LET.	REVISIONS	DATE	BY

UNLESS OTHERWISE SPECIFIED ALL DIMENSIONS ARE
FRACTIONAL ± 1/64"
DECIMAL ± .005"
ANGULAR ± 0° 30'

SUPERSEDED BY
SUPERSEDES
CORRECT FOR No.
FIRST INST. No.

PEAKING SPACERS
MEDIUM SURFACE MAGNETIC
SUSCEPTIBILITY COILS

TEXACO Inc.
RESEARCH AND TECHNICAL DEPARTMENT
EXPLORATION AND PRODUCTION RESEARCH DIVISION
BELLAIRE, TEXAS

DE | DR. CRJ | TR
CK | DATE: 7-17-61
SCALE: FULL
ASSEMBLY No U9560

U9566

47

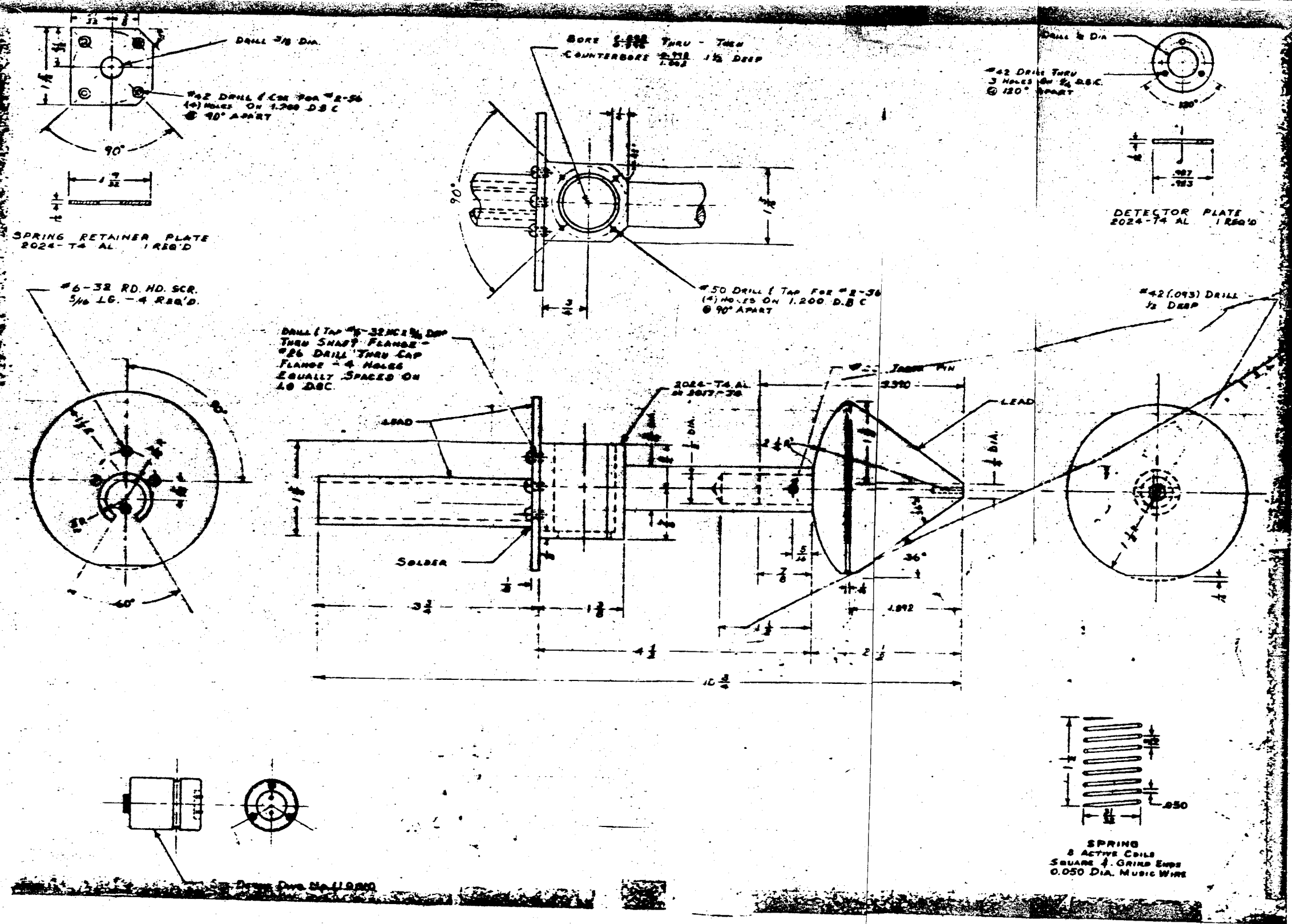

MATERIAL	SIZE	QUANT.
LEAD		
2024 ALUMINUM		

UNLESS OTHERWISE SPECIFIED ALL DIMENSIONS ARE:
FRACTIONAL ± 1/64"
DECIMAL ± .005"
ANGULAR ± 0° 30'

DESIGNED		DATE
DRAWN	U H K	DATE 5-16-61
TRACED		DATE
CHECKED		DATE

SCALE: FIRST INST. NO.

TEXACO INC.
RESEARCH AND TECHNICAL DEPARTMENT
EXPLORATION AND PRODUCTION RESEARCH DIVISION
DELLAVE, TEXAS

LET	REVISIONS	DATE	BY

CORRECT FOR INST. NO. SUPERSEDED BY SUPERSEDES

DENSITY SENSOR & SURFACE VELOCITY

ASSEMBLY R9571

F1-A32-48

RE-ORDER No. 61-475

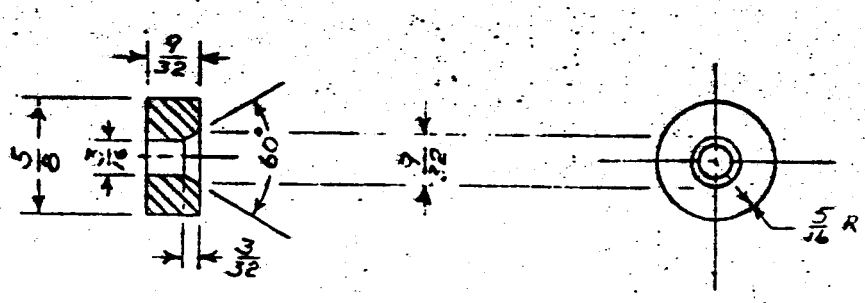

LEAD	3/4 x 3/8	1				
MATERIAL	SIZE	QUANT.	LIST.	REVISIONS	DATE	BY

UNLESS OTHERWISE SPECIFIED ALL DIMENSIONS ARE:
FRACTIONAL ± 1/64"
DECIMAL ± .005"
ANGULAR ±0° 30'

SUPERSEDED BY
SUPERSEDES
CORRECT FOR NO.
FIRST INST. NO.

LEAD SPACER FOR DENSITY SENSOR

DE. DR. J.K TR.
CK. DATE: 5-17-61
SCALE: FULL
ASSEMBLY NO.

TEXACO Inc.
RESEARCH AND TECHNICAL DEPARTMENT
EXPLORATION AND PRODUCTION RESEARCH DIVISION
BELLAIRE, TEXAS

U9572 49

ORDER No. 61-475

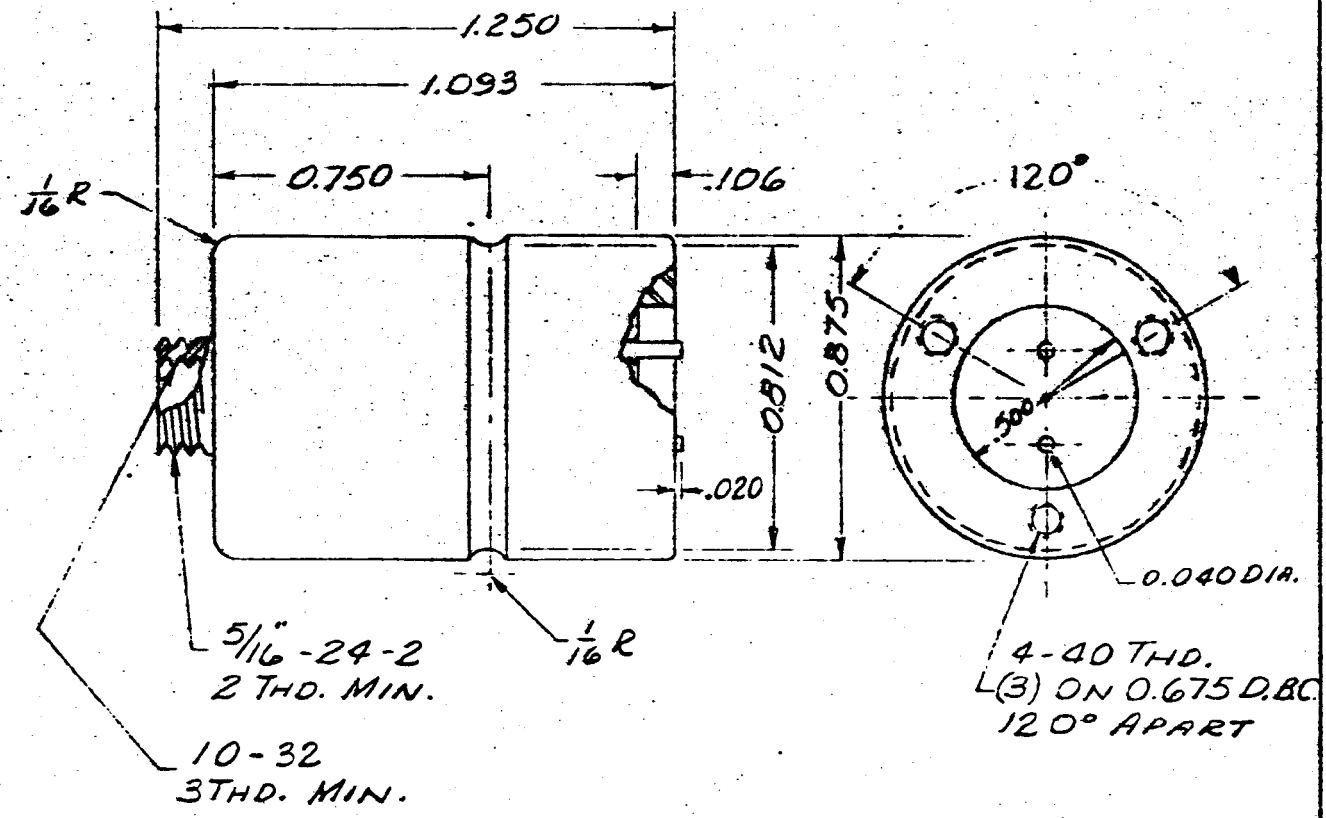

HALL-SEARS NO. A-51679
ASSEMBLY HS-J-KL

MATERIAL	SIZE	QUANT.	LET.	REVISIONS	DATE	BY

UNLESS OTHERWISE SPECIFIED ALL DIMENSIONS ARE:
FRACTIONAL ± 1/64"
DECIMAL ± .005"
ANGULAR ± 0° 30'

SUPERSEDED BY
SUPERSEDES
CORRECT FOR NO.
FIRST INST. NO.

HALL-SEARS GEOPHONE
JOB #N33552-LUNAR
SURFACE EQUIPMENT

DE. DR. P.L. TR. C.J.L.
CK. DATE 8-21-61
SCALE: 2X
ASSEMBLY NO.

TEXACO Inc.
RESEARCH AND TECHNICAL DEPARTMENT
EXPLORATION AND PRODUCTION RESEARCH DIVISION
BELLAIRE, TEXAS

U9610 50

Figure 19

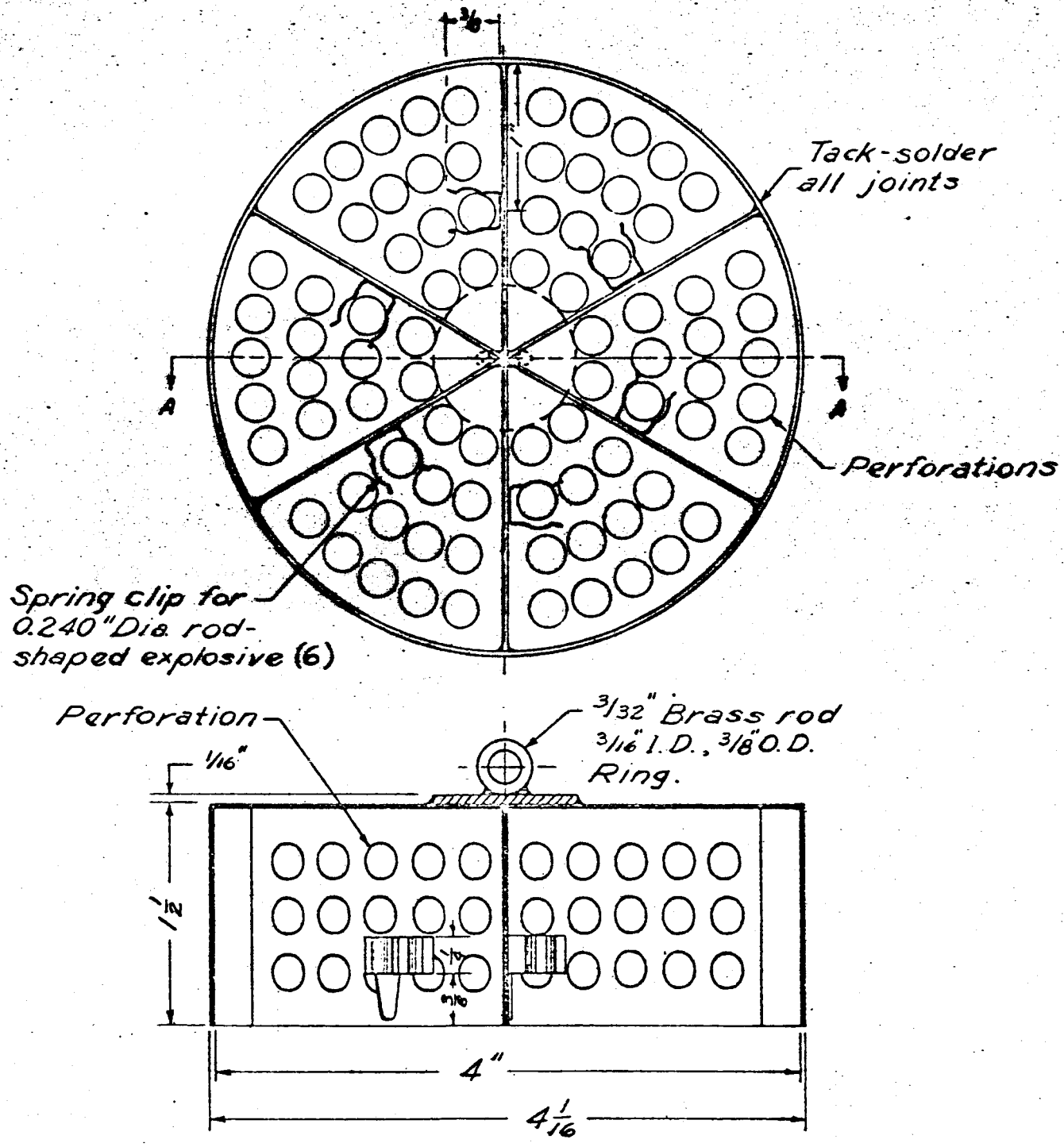

Section A-A

MATERIAL: Sheet material brass, 1/32" with 1/4" perforations on 3/8". centers. Ring plate 1/16" brass
Spring Cligs, Bery. Cop. (6)

BREADBOARD ACOUSTIC SOURCE HOLDER

1:794-71
1:794.36-34

RECORDER No. 61-475

Material:
Aluminum

Figure 20

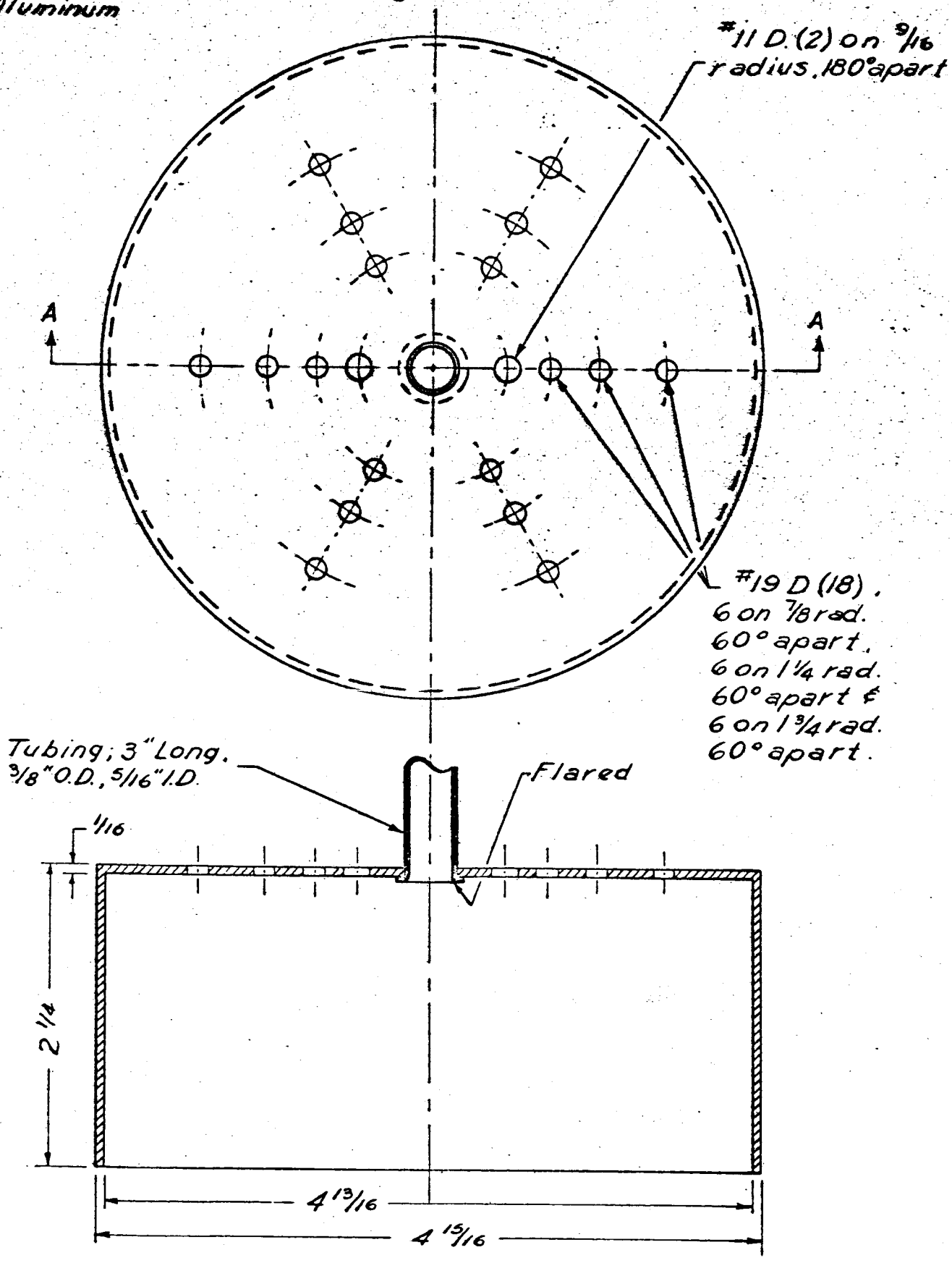

Section A-A

SOURCE HOLDER
ENCLOSURE FOR VACUUM TESTS

1:794-72
1:794-36-35

RE-ORDER No. 61-475

PARTS LIST
for
MUTUAL INDUCTANCE BRIDGE

Number	Description	Remarks
1	Chassis 7"x12"x3"	Aluminum
1	Cinch Jones terminal #3-141	
16	SPST toggle switch	Must have positive, low resistance contacts.
1	SPDT toggle switch	Must have positive, low resistance contacts.
1	Cannon Plug X3-14	This type cannon plug allows much room for improvement, and we recommend that it NOT be used.
1	Cannon Plug X4-14	
1	.01μfd silver mica condenser	
1	.001μfd " " "	
1	10 turn Helipot (1-50 ohms)	Linearity .5% or better
1	10 turn Helipot (1-1K ohms)	Linearity .5% or better
1	100Ω 10-watt resistor	Wire wound resistors will do.
1	100K Precision Resistors	
1	75K " "	The resistors used by Texaco are I.R.C. ww4's. However, a higher precision resistor can be purchased and should be used.
1	40K " "	
1	20K " "	Example: I.R.C. Type MEC molded Metal Film Resistors Tolerance .05%.
1	10K " "	
1	5K " "	" " "
3	2K " "	" " "
2	1K " "	" " "
1	50 " "	" " "
1	100 " "	" " "
2	200 " "	" " "
1	500 " "	" " "

1:794.46-47

RECORD No 61-475

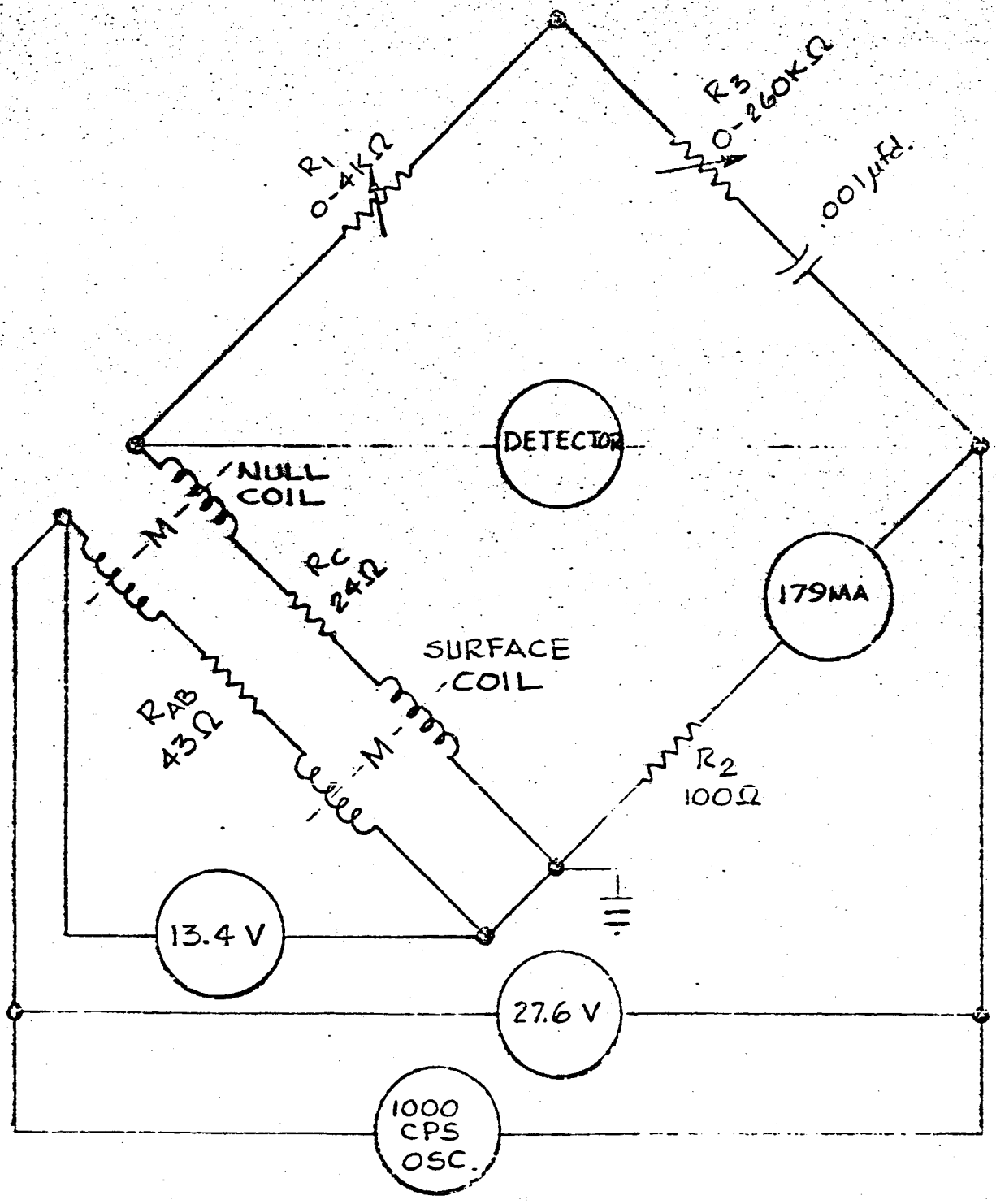

MATERIAL	SIZE	QUANT	LET.	REVISIONS	DATE	BY

UNLESS OTHERWISE SPECIFIED ALL DIMENSIONS ARE:
FRACTIONAL ± 1/64"
DECIMAL ± .005"
ANGULAR ± 0° 30'

SUPERSEDED BY
SUPERSEDES
CORRECT FOR NO.
FIRST INST. NO.

COILS & BRIDGE WIRING DIAGRAM FOR SURFACE COILS & NULL COILS-SMALL SURFACE MAGNETIC SUSCEPTIBILITY COILS

TEXACO INC.
RESEARCH AND TECHNICAL DEPARTMENT
EXPLORATION AND PRODUCTION RESEARCH DIVISION
BELLAIRE, TEXAS

DR RWP
DATE 5-23-61
SCALE CIRCUIT
ASSEMBLY NO.
U9612
54

DRAWING No. 61-475

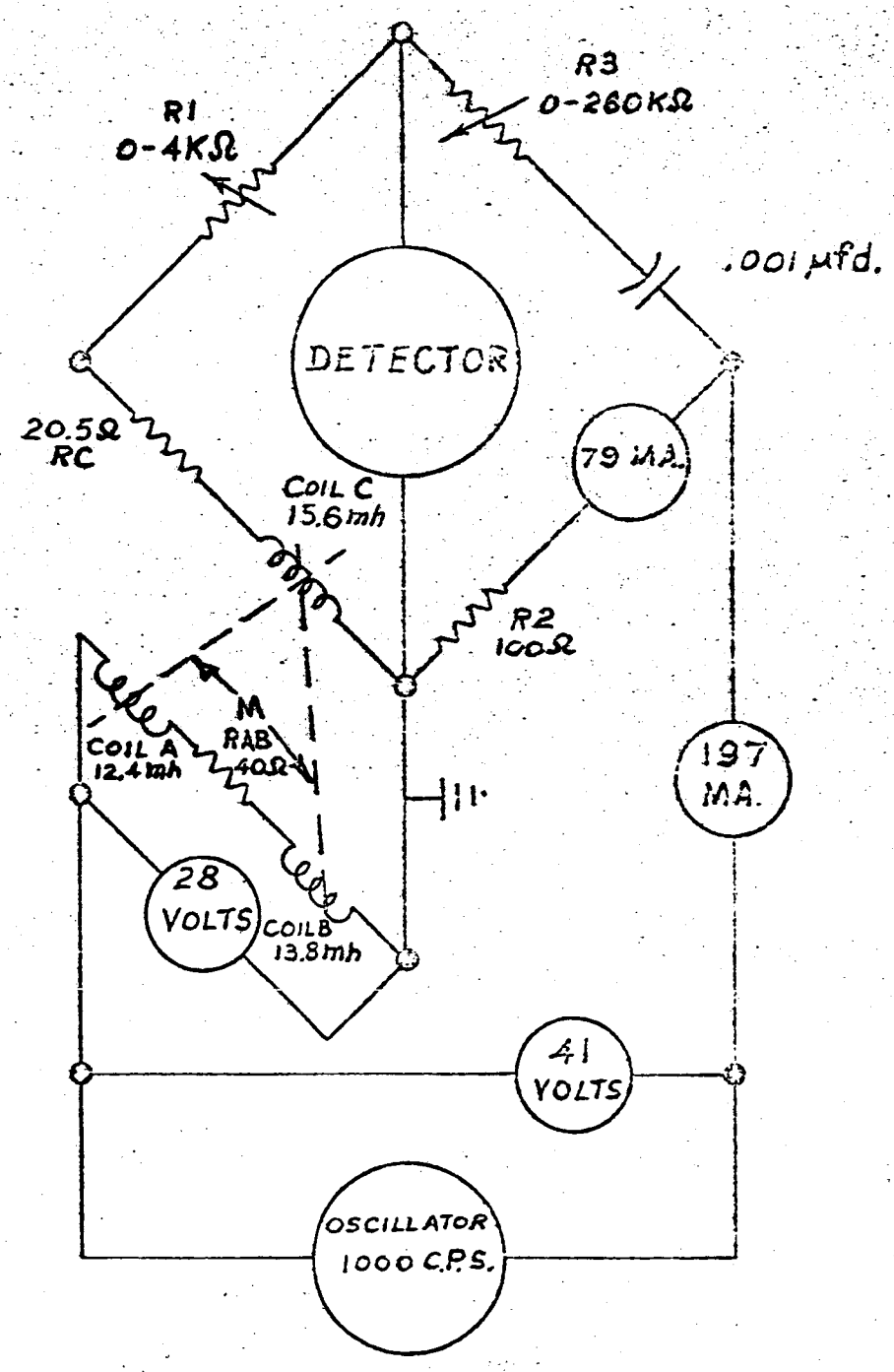

MATERIAL	SIZE	QUANT.	LET.	REVISIONS	DATE	BY

UNLESS OTHERWISE SPECIFIED ALL DIMENSIONS ARE:
FRACTIONAL ± 1/64"
DECIMAL ± .005"
ANGULAR ± 0° 30'

SUPERSEDED BY
SUPERSEDES
CORRECT FOR NO.
FIRST INST. NO.

COILS & BRIDGE WIRING DIAGRAM FOR MEDIUM SURFACE MAGNETIC SUSCEPTIBILITY COILS

TEXACO Inc.
RESEARCH AND TECHNICAL DEPARTMENT
EXPLORATION AND PRODUCTION RESEARCH DIVISION
BELLAIRE, TEXAS

DR. RVP DES. R.J.
CK. DATE 6-23-61
SCALE: CIRCUIT
ASSEMBLY NO.
D9018

APPENDIX C

SUBSURFACE INSTRUMENTATION

Although the design, construction, calibration, and testing of each of the individual instruments, which are combined into the downhole logging sonde, have been well documented in partial reports issued during the breadboard development program, no general overall written description of the unit has, as yet, been presented. Such a general description, along with some notes on assembly and wiring, is presented here along with the complete component and assembly drawings for the downhole logging sonde.

Brief Description of Downhole Sonde Referring to Fig. 1 and Drawing RA-9449

The breadboard model of the downhole logging sonde, although similar in principle to the unit proposed in Progress Report No. 6, p. 26, differs somewhat in detail from this unit.

The most noticeable mechanical difference is that it was found to be unnecessary to pivot the gamma source to allow variation of collimation angle with hole size. Also, as mentioned earlier, the measurement of electrical resistivity has been discarded.

A brief description of the breadboard model of the downhole sonde is as follows. Fig. 1 is a photograph of the assembled (unwired) unit and Dwg. RA-9449 is an overall assembly drawing and wiring diagram for the unit. The sonde is 21 in. long and is collapsible to fit within a cylinder whose inside diameter

is 1.0 in. It is designed to operate within a borehole whose diameter ranges from 1.25 in. to 1.75 in.

At the bottom of the sonde is the radiometer with conical mirror for determination of borehole wall temperature. Since this radiometer had not been delivered at the time the picture for Fig. 1 was taken, a threaded plug was substituted for the radiometer.

The read-out from the radiometer is in the form of 2 DC voltages: One from a chromel-constantan thermocouple giving radiometer housing temperature, and the second is the DC voltage from a pair of chromel-constantan junctions which give the difference in temperature between the radiometer housing and target.

Next is the apparatus for the determination of thermal diffusivity of the lunar subsurface material. This device consists of, (1) a GE #57 light bulb (a source of radiant energy) with holder and appropriate nickel shields and (2) a radiometer to sense the borehole wall temperature in the region illuminated by the source of radiant energy.

Power (0.5 - 1.5 watt) must be supplied to the light bulb during the course of an experiment. Signal read-out is, again, in the form of 2 DC voltages; one from the copper-constantan couple which measures a reference temperature on the sonde and the second from a four junction thermopile which measures the difference between the target temperature and the reference temperature.

Immediately above this unit is mounted the copper-constantan thermocouple which is to attempt a measurement of borehole wall temperature by contact. This thermocouple is held against the wall by a small bow spring.

In this same general area is mounted the bottom end of the large bow spring which acts as a decentralizer for the sonde. As can be seen in the assembly drawing, the end of this spring is attached to a 2.5 meg. non-linear potentiometer. Compression of the decentralizer spring will result in rotation of this potentiometer so as to change the resistance between the variable contact and either end of the resistance element. This resistance can then be correlated with borehole diameter and the decentralizer spring can act as a hole size caliper. On the present model, the observed resistance was from 0 to 1.7 K ohm. This particular system will not be used in later models. The rotary potentiometer will be replaced by a linear unit, around which can be designed a caliper which will represent a significant mechanical improvement over the present design.

Proceeding up the tool, the next unit is the partially shielded GM counter, a part of the density measuring device. This unit requires 875 volts at a maximum current of about 10 microamperes. Note that the wires which lead past the counter are mounted in the 1/4 in. wide window opening of the counter tube shielding.

Above the GM counter is the epoxy section on which are mounted the three coils which constitute the magnetic susceptibility unit. Within this epoxy section is imbedded a copper constantan thermocouple to measure the sonde temperature which will be necessary for correction of the susceptibility readings.

Next is the gamma source holder of Mallory 1000 metal. Note the small (1/32 in. diameter) hole drilled into the source cavity from the rear. This facilitates removal of the source capsule, by allowing the insertion of a wire probe with which the source capsule can be pushed out of the shield.

The top end of the decentralizer spring attaches immediately above the source shielding.

At the top of the sonde is the geophone mounting. The geophone is mounted on a small bow spring which not only holds it against the borehole wall, but provides a significant amount of acoustic decoupling from the body of the sonde.

Provision for mechanical attachment of the sonde is made in the form of a 5/16 in. diameter rod which extends axially from the top. All wiring is brought out as pigtail leads from the periphery of the sonde.

Notes on Downhole Logging Sonde (RA-9449)

1. Wiring and assembly of sonde proceed from the bottom (radiometer) end upward. The radiometer assembly was made to be removable from the breadboard model of the sonde since it was unavailable at the time of final assembly of the sonde.

2. Shielding on the high voltage lead of the GM counter extends all the way through the magnetic susceptibility coils to the counter. All other shielding terminates above the magnetic susceptibility coils. This was necessitated by the lack of space in the middle of the coils and beside the counter through which the required number of leads must be placed. The size of some of these leads can be considerably reduced.

3. Not only must all of the wires which pass through the magnetic susceptibility coils be non-magnetic, but they must be rigidly secured in position (potted in place).

4. The decentralizer spring must be strong enough to over-ride both the smaller bowsprings which hold a thermocouple and the acoustic receiver in contact with the borehole wall so that the density source and counter will be in contact with the borehole wall.

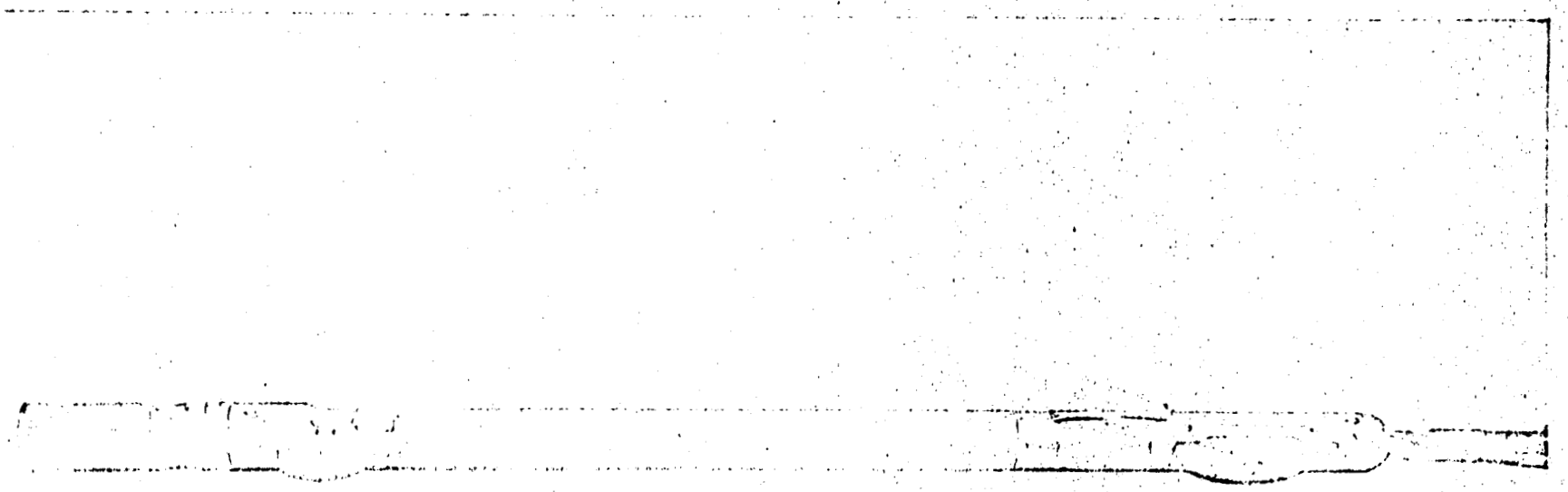

FIGURE I

LUNAR SUB-SURFACE LOGGING SONDE

RE-ORDER No. 61-475

REQUISITION No. 61-475

DRAWING & PART NO.	ASSEMBLY NUMBER	QUAN. REQD	STOCK ITEM	DESCRIPTION
RA 9449				ASSEMBLY & CIRCUIT DIAGRAM
U 9499	RA 9449	1		Extension Rod
R 9500	"	1		Geophone Section
R 9501	"	1		Source Section
U 9502	"	1		Source Holder
U 9503	"	1		Splice Sleeve
R 9504	"	1		Susceptibility Coils Form
R 9505	"	1		Counter Section
U 9506	"	1 ea.		Counter Cushions
U 9507	"	1		Hub
U 9508	"	1		Threaded Cap
U 9509	"	1		Insulating Spacer
R 9510	"	1		Radiometer-Lunar Probe Installation
R 9511	"	1		Gamma Ray Counter
U 9512	"	6		Solder Stand-Off Terminals
U 9513	"	1		Modify Potentiometer
U 9514	"	1		Pivot Block
U 9515	"	1		Decentralizer Spring Bracket
R 9516	"	1		Decentralizer Spring
U 9517	"	1		Top Cap
U 9518	"	1		Wall Thermocouple Spring
U 9519	"	2		Pivot Shaft
U 9520	"	2		Spring Retainer
U 9521	"	1		Geophone Spring
U 9522	"	1		Source Retainer
U 9523	"	1		Accelerometer Mount Screw

TEXACO R. & T. DEPT. EXPL. & PROD. RESEARCH DIV. BELLAIRE, TEXAS	PARTS LIST FOR LUNAR SUB-SURFACE LOGGING SONDE	DATE 7-17-61	BY JJH
		RA 9449-A	

RECORDED No. 61-475

DRAWING & PART NO.	ASSEMBLY NUMBER	QUAN. REQD.	STOCK ITEM	DESCRIPTION
U 9524	RA 9449	1		Accelerometer
U 9525	"	1		Accelerometer Spacer
R 9526	"	1		Wall Thermocouple & Potentiometer Section
U 9527	"	1		Cylinder
U 9528	"	1		Shield Housing
U 9529	"	1		Bulb Holder
U 9530	"	1		Adapter
U 9531	"	4		Radiation Shield
U 9532	"	1		Temperature Reference Block
U 9533	"	1		Cylinder Retaining Sleeve
U 9534	"	6		Shield Spacer
U 9535	"	2		Cylinder Cushion
U 9536	"	1		Plug
U 9573		1		Circuit of Magnetic Susceptibility Down Hole Coils with Surface Coils Attached

TEXACO R. & T. DEPT EXPL. & PROD. RESEARCH DIV. BELLAIRE, TEXAS	PARTS LIST FOR LUNAR SUB-SURFACE LOGGING SONDE	DATE 7-17-61	BY JJH
		RA 9449-B	63

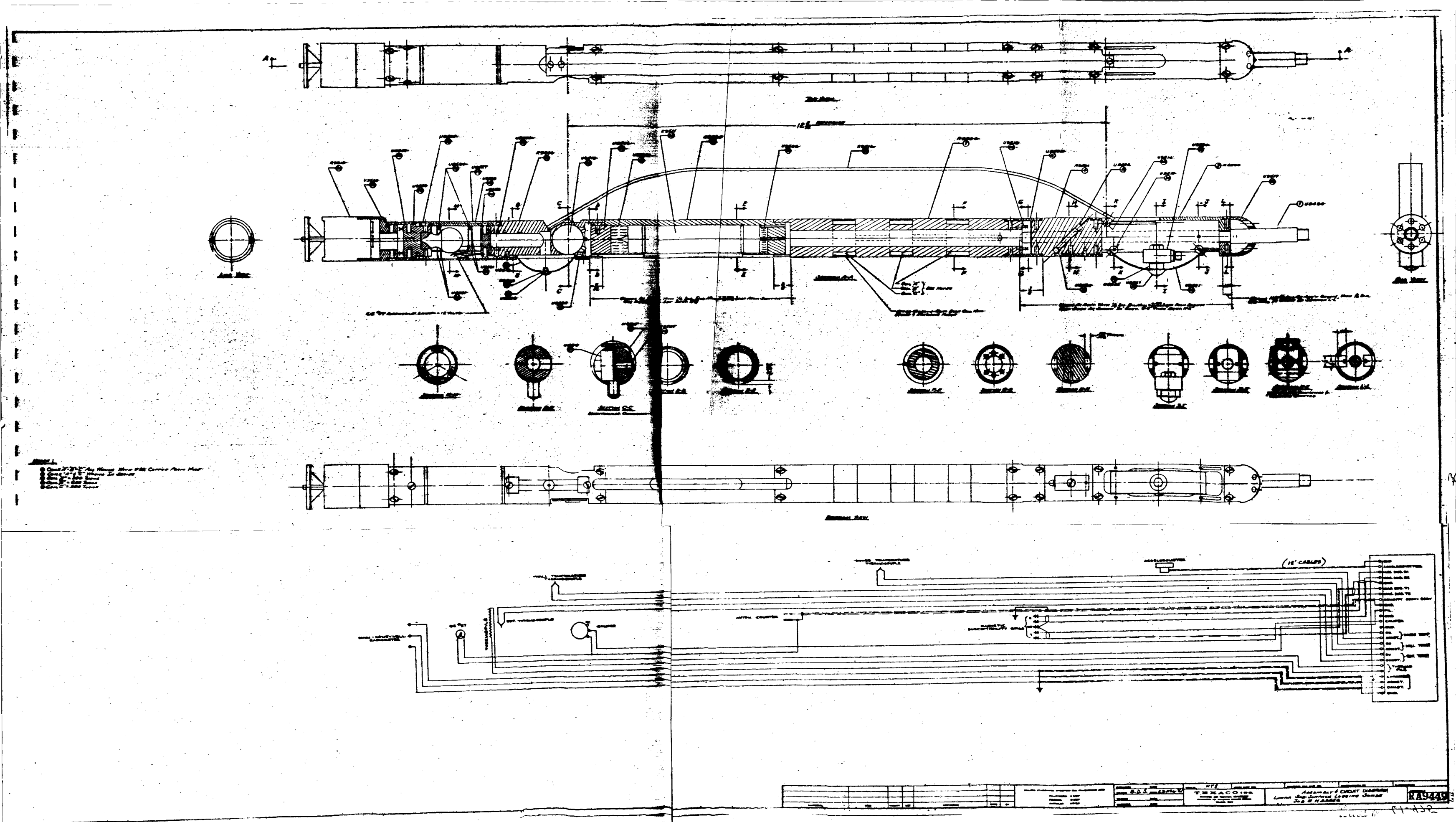
(16' CABLES)
TEXACO INC.
RA9449

RE-ORDER No. 61-475

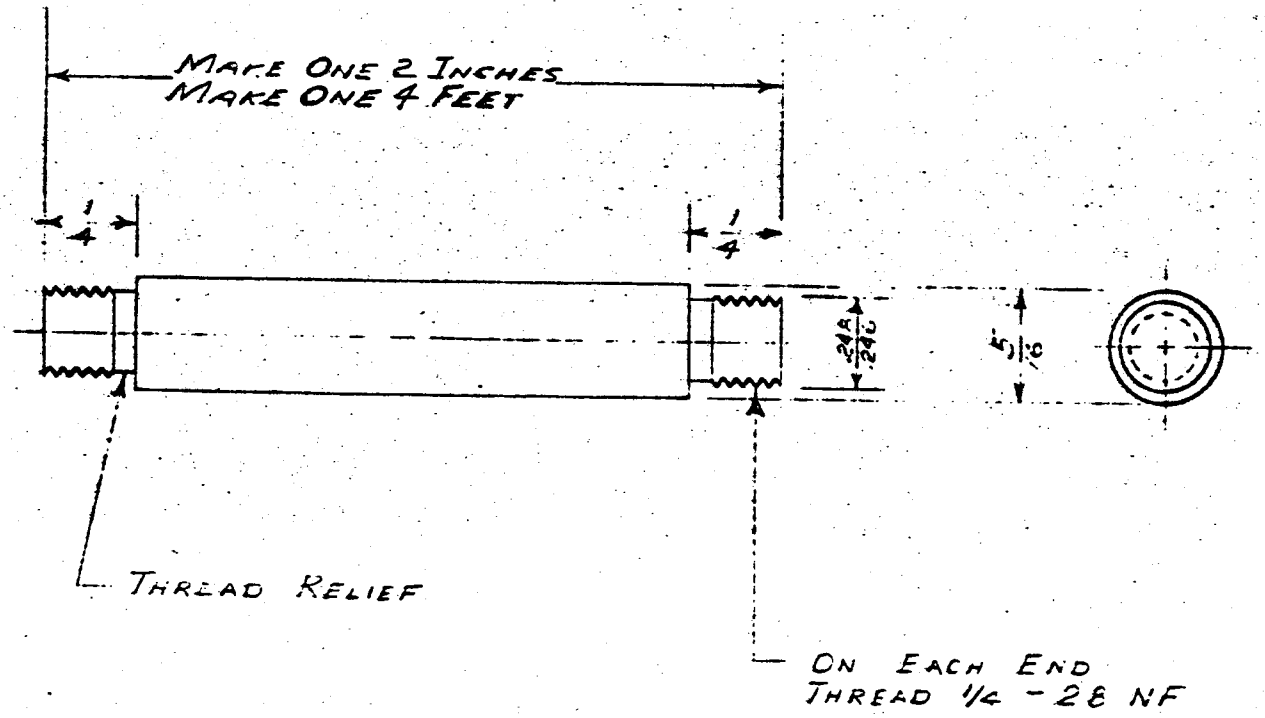

MATERIAL	SIZE	QUANT	LET.	REVISIONS	DATE	BY
STAINLESS 302	AS SHOWN	1 EA				

UNLESS OTHERWISE SPECIFIED ALL DIMENSIONS ARE:
FRACTIONAL ± 1/64"
DECIMAL ± .005"
ANGULAR ± 0° 30'

SUPERSEDED BY
SUPERSEDES
CORRECT FOR NO.
FIRST INST. NO.

EXTENSION ROD
LUNAR SUB-SURFACE LOGGING SONDE
USE # N 33552

TEXACO Inc.
RESEARCH AND TECHNICAL DEPARTMENT
EXPLORATION AND PRODUCTION RESEARCH DIVISION
BELLAIRE, TEXAS

DE B.D.S. DR. J.K. TR.
CK. DATE: 5-25-61
SCALE: DOUBLE
ASSEMBLY NO. FA 9441

U9499 65

RE-ORDER No. 61-475

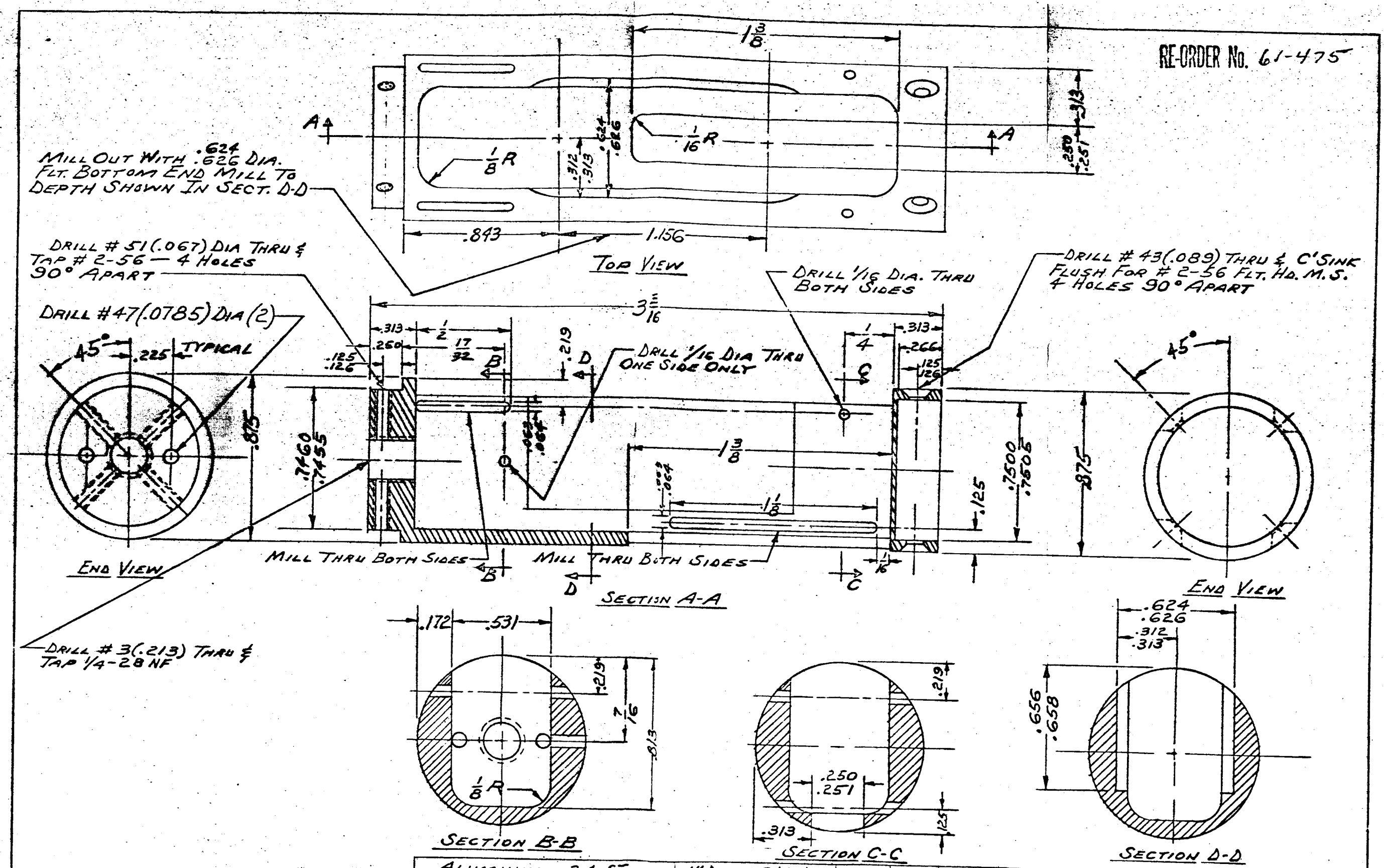

UNLESS OTHERWISE SPECIFIED ALL DIMENSIONS ARE:
FRACTIONAL ± 1/64" DECIMAL ± .005" ANGULAR ± 0° 30'

MATERIAL	SIZE	QUANT.	LET.	REVISIONS	DATE	BY
ALUMINUM 24ST	1" DIA. × 3 1/2 LONG	1				

DESIGNED K.D.S.	DATE	SCALE: DOUBLE SIZE	FIRST INST. NO.	CORRECT FOR INST. NO.
DRAWN B.D.S.	DATE 15 MAY '61			SUPERSEDED BY / SUPERSEDES
TRACED	DATE			
CHECKED	DATE			

TEXACO
RESEARCH AND TECHNICAL DEPARTMENT
EXPLORATION AND PRODUCTION RESEARCH DIVISION
BELLAIRE, TEXAS

GEOPHONE SECTION
LUNAR SUB-SURFACE LOGGING SONDE
JOB # N33552

ASSEMBLY RA 9449

R9500

66

RE-ORDER No. 61-475

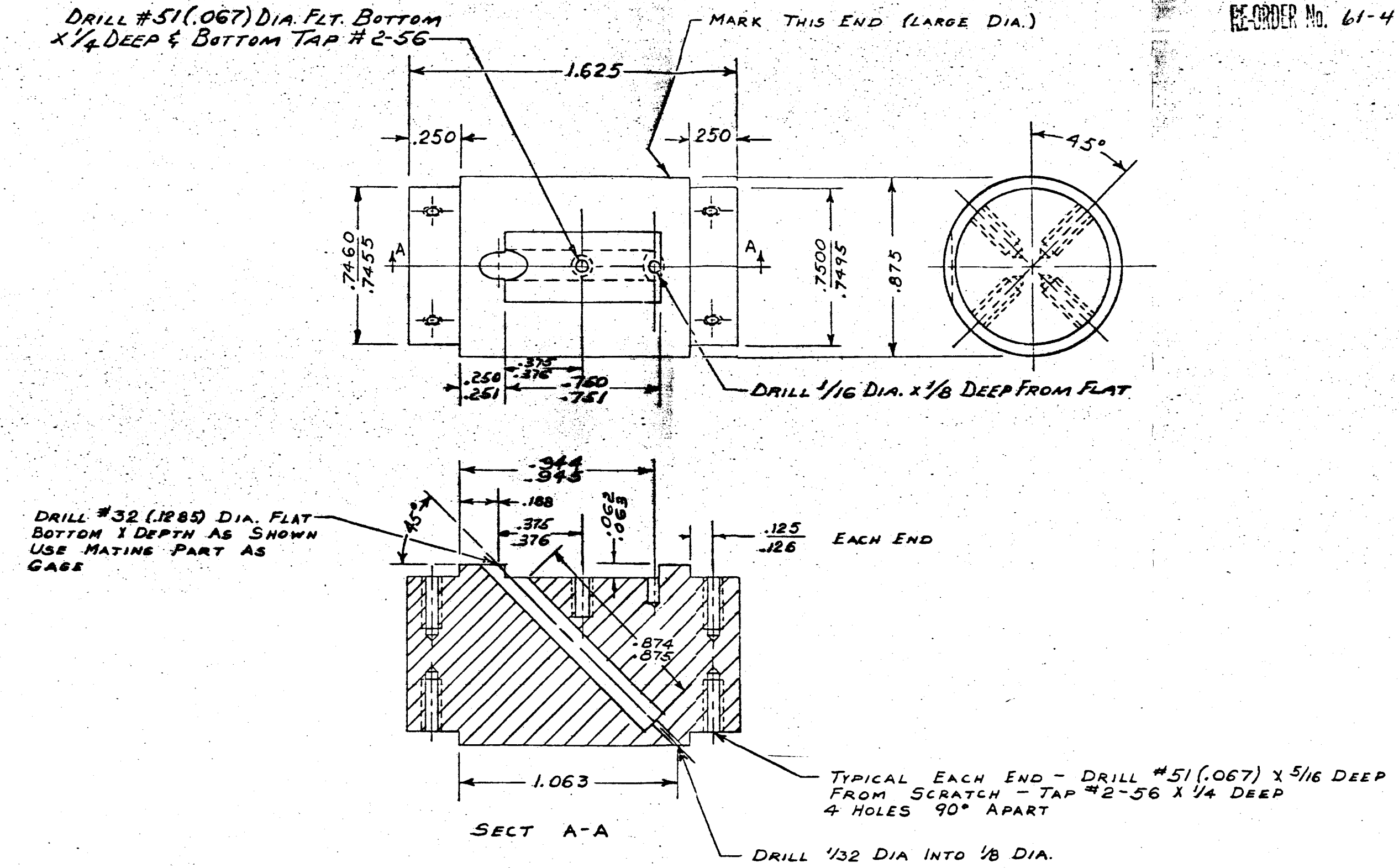

UNLESS OTHERWISE SPECIFIED ALL DIMENSIONS ARE:
FRACTIONAL ± 1/64" DECIMAL ± .005" ANGULAR ± 0° 30'

MATERIAL	SIZE	QUANT.	LET.	REVISIONS	DATE	BY
MALLORY 1000	1" DIA X 1 3/4 LG.	1				

DESIGNED B. D. S. DATE	SCALE: DOUBLE	FIRST INST. NO.	CORRECT FOR INST. NO.	SUPERSEDED BY / SUPERSEDES
DRAWN J. W. K. DATE 5-28-61	TEXACO RESEARCH AND TECHNICAL DEPARTMENT EXPLORATION AND PRODUCTION RESEARCH DIVISION BELLAIRE, TEXAS	SOURCE SECTION LUNAR SUB-SURFACE LOGGING SONDE JOB # N 33552		ASSEMBLY RA 9449
TRACED DATE				R9501
CHECKED DATE				

67

RE-ORDER No. 61-475

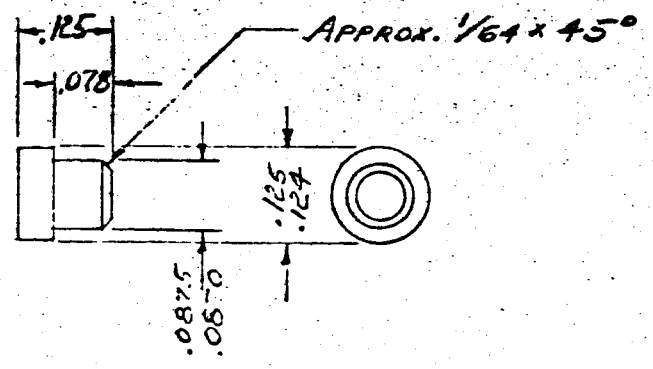

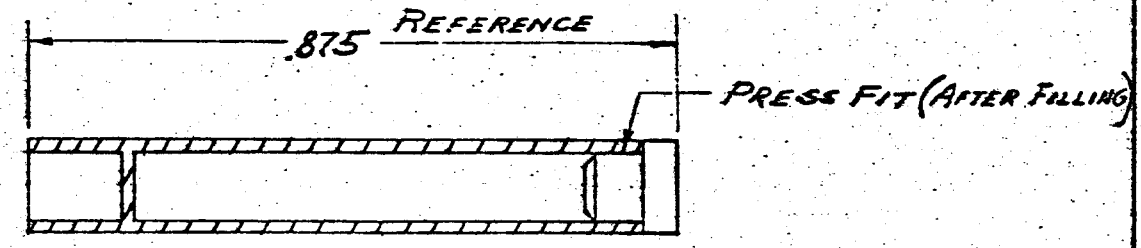

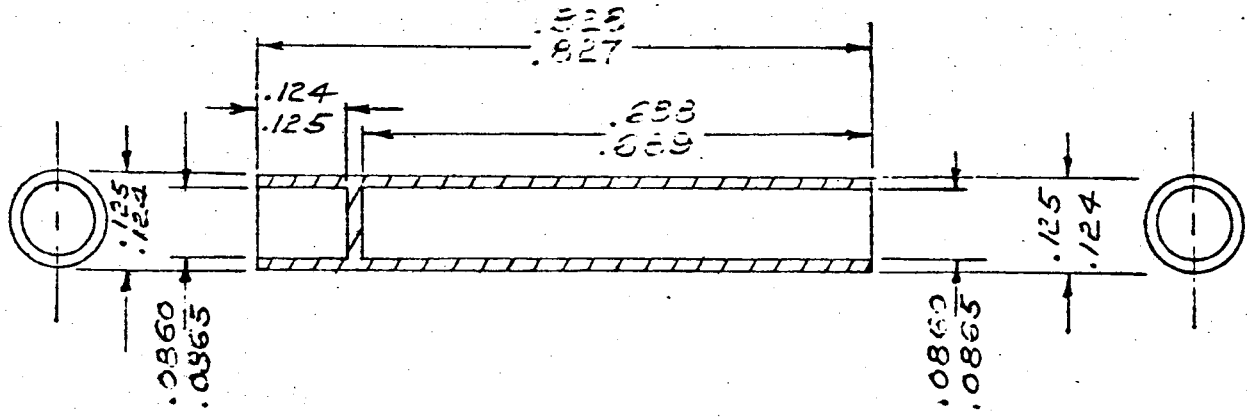

MATERIAL	SIZE	QUANT.	LET.	REVISIONS	DATE	BY
ALUMINIUM	AS SHOWN	4				

UNLESS OTHERWISE SPECIFIED ALL DIMENSIONS ARE:
FRACTIONAL ± 1/64"
DECIMAL ± .005"
ANGULAR ± 0° 30'

SUPERSEDED BY
SUPERSEDES
CORRECT FOR NO.
FIRST INST. NO

SOURCE HOLDER
LUNAR SUB-SURFACE LOGGING SONDE
JOB # 33551

TEXACO Inc.
RESEARCH AND TECHNICAL DEPARTMENT
EXPLORATION AND PRODUCTION RESEARCH DIVISION
BELLAIRE, TEXAS

DE. RWP DR. BDS TR.
CK. DATE: 12 MAY '61
SCALE: 4 : 1
ASSEMBLY NO RA 9449

U9502 68

(F)

RE-ORDER No. 61-475

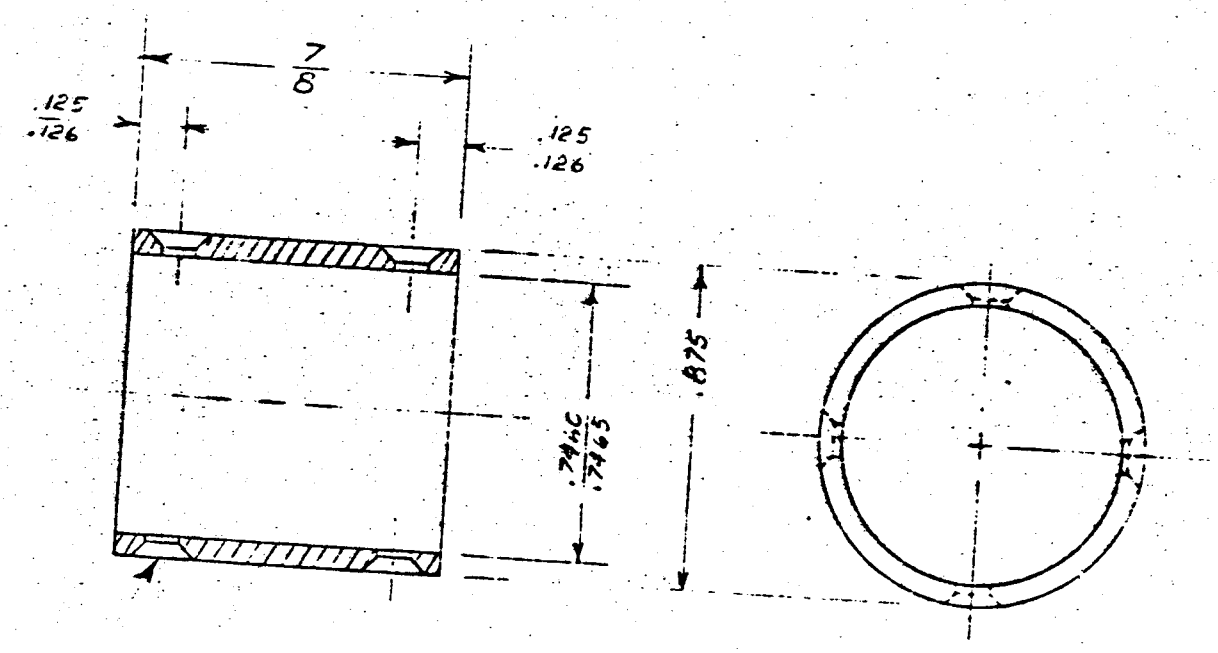

DRILL #43 (.089) THRU &
CSK FLUSH FOR #2-56
FLAT HD. M.S. - 4 HOLES
90° APART - EACH END

ALUM. 24S	AS SHOWN	1				
MATERIAL	SIZE	QUANT.	LET.	REVISIONS	DATE	BY

UNLESS OTHERWISE SPECIFIED ALL DIMENSIONS ARE:
FRACTIONAL = 1/64"
DECIMAL = .005"
ANGULAR = 0° 30'

SUPERSEDED BY
SUPERSEDES
CORRECT FOR NO.
FIRST INST. NO.

SPLICE SLEEVE
LUNAR SUB-SURFACE LOGGING SONDE
JOB # N 33552

TEXACO Inc.
RESEARCH AND TECHNICAL DEPARTMENT
EXPLORATION AND PRODUCTION RESEARCH DIVISION
BELLAIRE, TEXAS

DE. B.D.S. DR. J. K. TR.
CK. DATE: 5-23-61
SCALE: DOUBLE
ASSEMBLY No. RA 9449

U9503

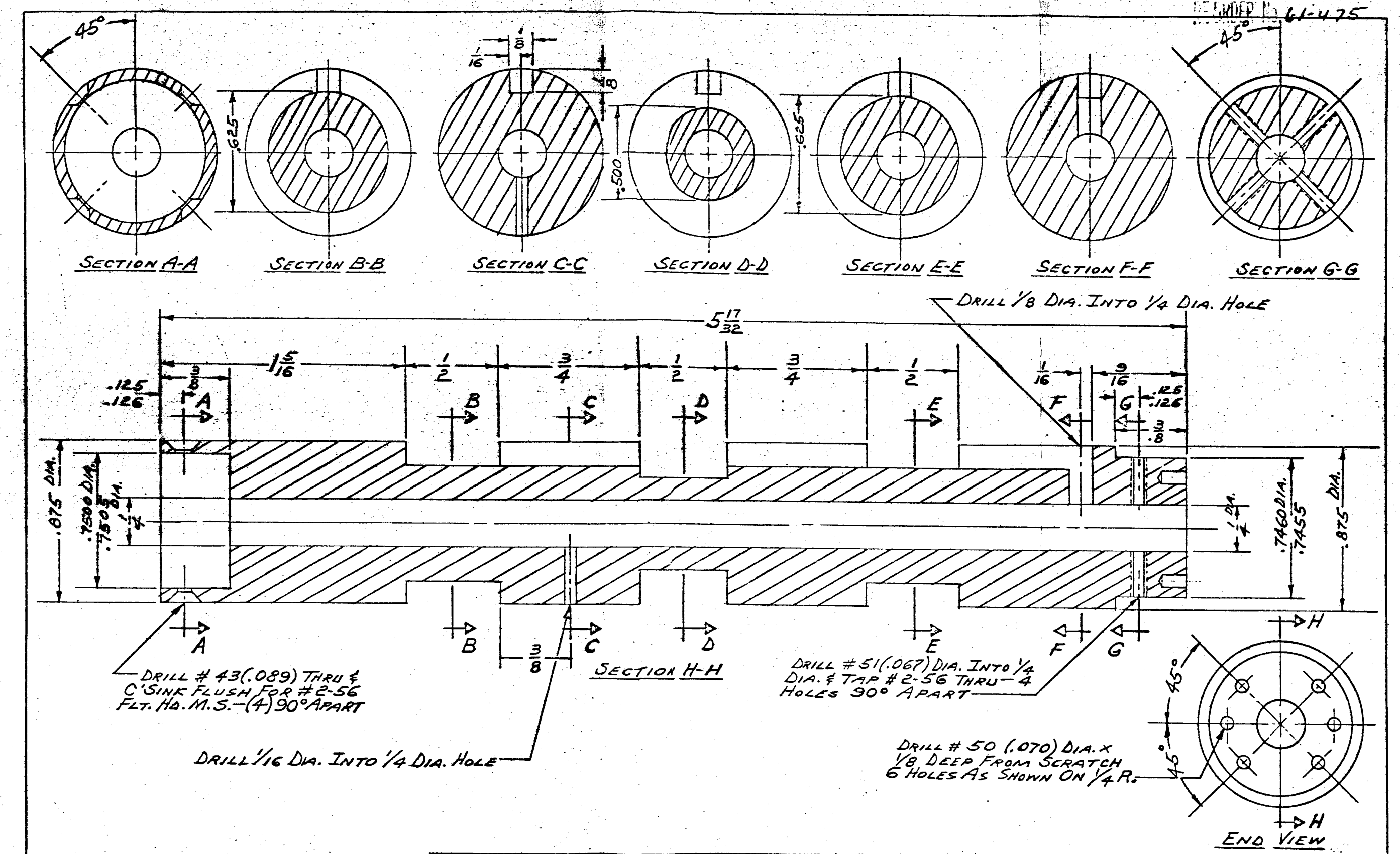

UNLESS OTHERWISE SPECIFIED ALL DIMENSIONS ARE:
FRACTIONAL ± 1/64" DECIMAL ± .005" ANGULAR ± 0° 30'

MATERIAL	SIZE	QUANT.	LET.	REVISIONS	DATE	BY
GLASS-EPOXY G11	1" DIA. x 6" LONG	1				

DESIGNED G.G. & R.W.P.	DATE	SCALE: DOUBLE SIZE	FIRST INST. NO.	CORRECT FOR INST. NO.	SUPERSEDED BY	SUPERSEDES 70
DRAWN BDS	DATE 15 MAY '61	TEXACO RESEARCH AND TECHNICAL DEPARTMENT EXPLORATION AND PRODUCTION RESEARCH DIVISION BELLAIRE, TEXAS	SUSCEPTIBILITY COILS FORM LUNAR SUB-SURFACE LOGGING SONDE JOB # N33552		ASSEMBLY RA 9449
TRACED	DATE				R9504
CHECKED	DATE				

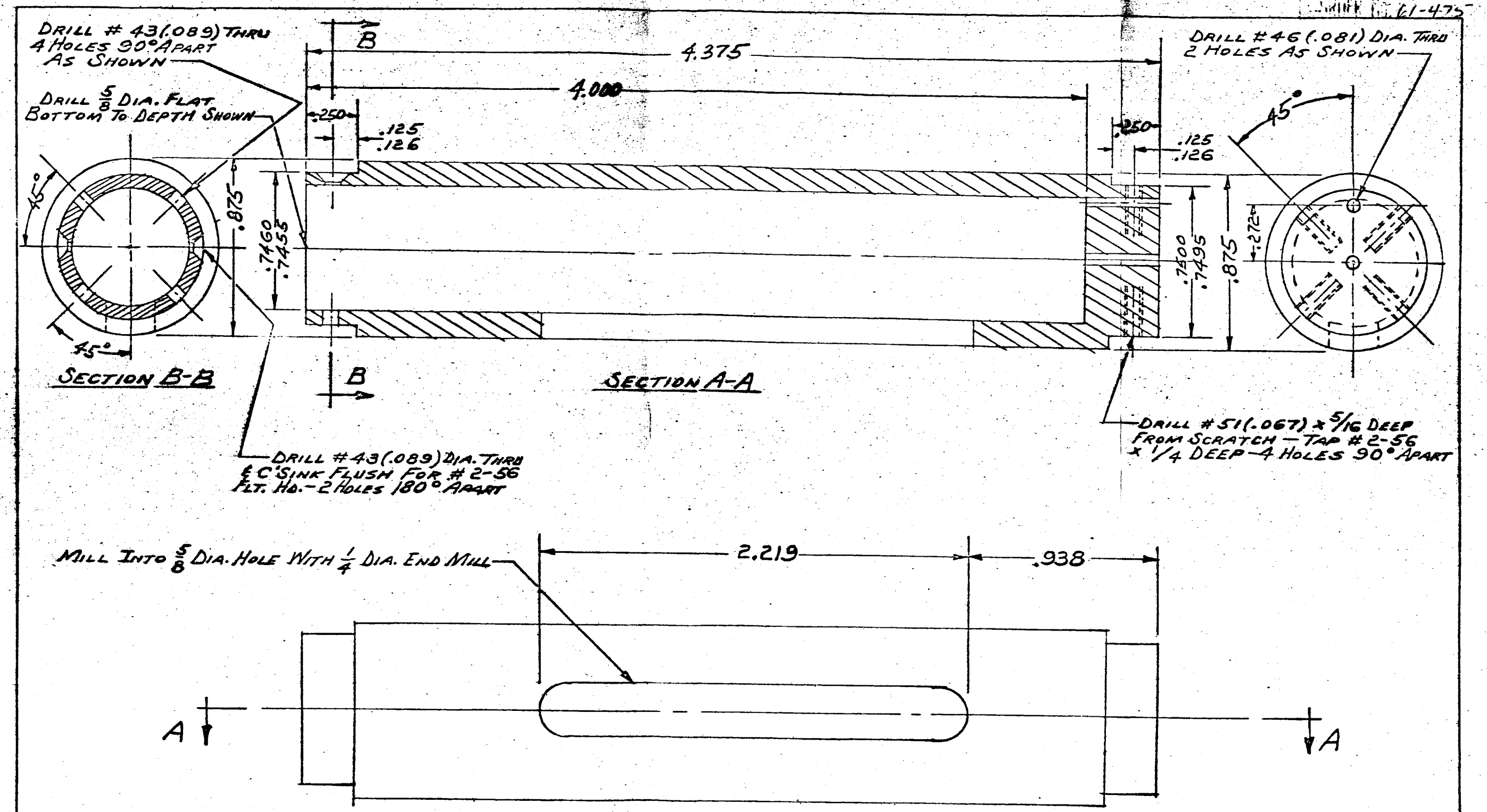

UNLESS OTHERWISE SPECIFIED ALL DIMENSIONS ARE:
FRACTIONAL ± 1/64" DECIMAL ± .005" ANGULAR ± 0° 30'

MATERIAL	SIZE	QUANT.	LET.	REVISIONS	DATE	BY
MALLORY 1000 METAL	1" DIA. x 4 1/2 LG.	1				

DESIGNED R.W.P.	DATE	SCALE: DOUBLE	FIRST INST. NO.	CORRECT FOR INST. NO.	SUPERSEDED BY / SUPERSEDES 71
DRAWN B.D.S.	DATE 25 MAY '61	TEXACO RESEARCH AND TECHNICAL DEPARTMENT EXPLORATION AND PRODUCTION RESEARCH DIVISION BELLAIRE, TEXAS	COUNTER SECTION LUNAR SUB-SURFACE LOGGING SONDE JOB # N33552		ASSEMBLY RA 9449
TRACED	DATE				R9505
CHECKED	DATE				

ORDER No. 61-475

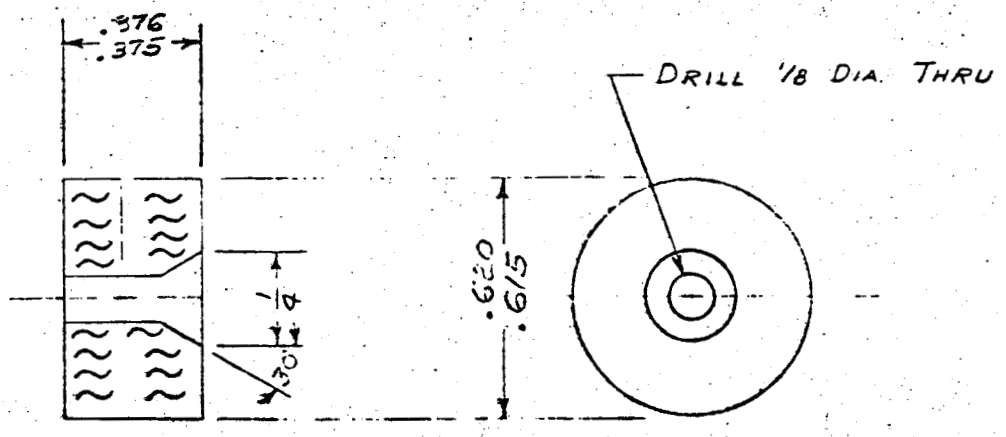

BOTTOM COUNTER CUSHION

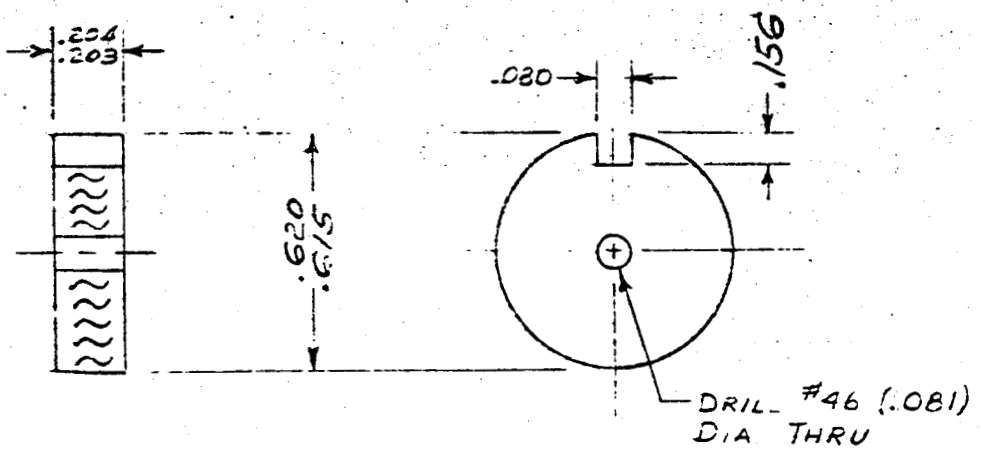

TOP COUNTER CUSHION

MATERIAL	SIZE	QUANT.	LET.	REVISIONS	DATE	BY
70 DURO NEOPRENE		1 EA.		—		

UNLESS OTHERWISE SPECIFIED ALL DIMENSIONS ARE:
FRACTIONAL = 1/64"
DECIMAL = .005"
ANGULAR = 0° 30'

SUPERSEDED BY
SUPERSEDES
CORRECT FOR No.
FIRST INST. No.

COUNTER CUSHIONS
LUNAR SUB-SURFACE LOGGING SONDE
JOB #N33552

DE. B.D.S. DR. J.K. TR.
CK. DATE: 5-23-61
SCALE: DOUBLE
ASSEMBLY No. RA 9449

TEXACO Inc.
RESEARCH AND TECHNICAL DEPARTMENT
EXPLORATION AND PRODUCTION RESEARCH DIVISION
BELLAIRE, TEXAS

U9506 72

(9)

ORDER No. 61-475

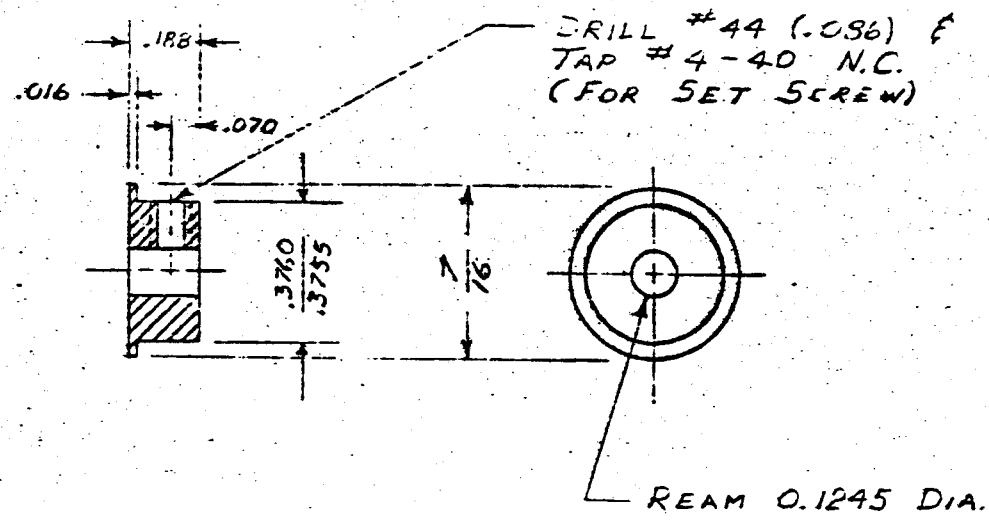

PRESS FIT INTO PART #29

MATERIAL	SIZE	QUANT.	LET.	REVISIONS	DATE	BY
STAINLESS		1				

UNLESS OTHERWISE SPECIFIED ALL DIMENSIONS ARE:
FRACTIONAL ± 1/64"
DECIMAL ± .005"
ANGULAR ± 0° 30'

SUPERSEDED BY
SUPERSEDES
CORRECT FOR NO.
FIRST INST. NO.

HUB
FOR DECENTRALIZER SPRING BRACKET
LUNAR SUB-SURFACE LOGGING SONDE
JOB # N33552

TEXACO Inc.
RESEARCH AND TECHNICAL DEPARTMENT
EXPLORATION AND PRODUCTION RESEARCH DIVISION
BELLAIRE, TEXAS

DE. B.D.S. DR. J.K. TR.
CK. DATE: 5-22-61
SCALE: DOUBLE
ASSEMBLY No. RA 9449
U9507 73

12

ORDER No. 61-475

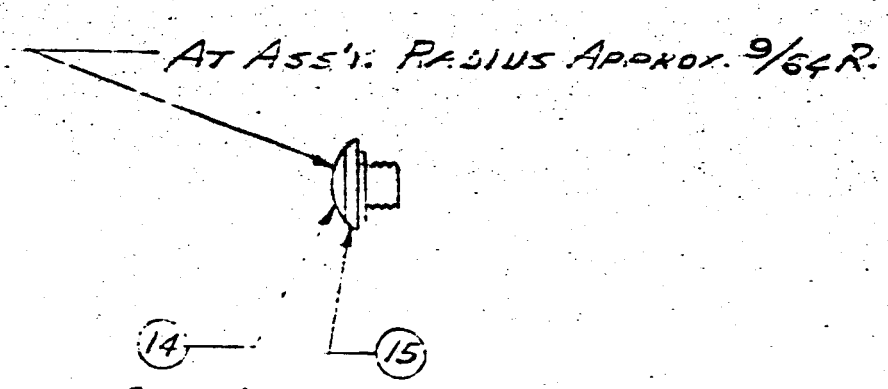

SUB-ASSEMBLY

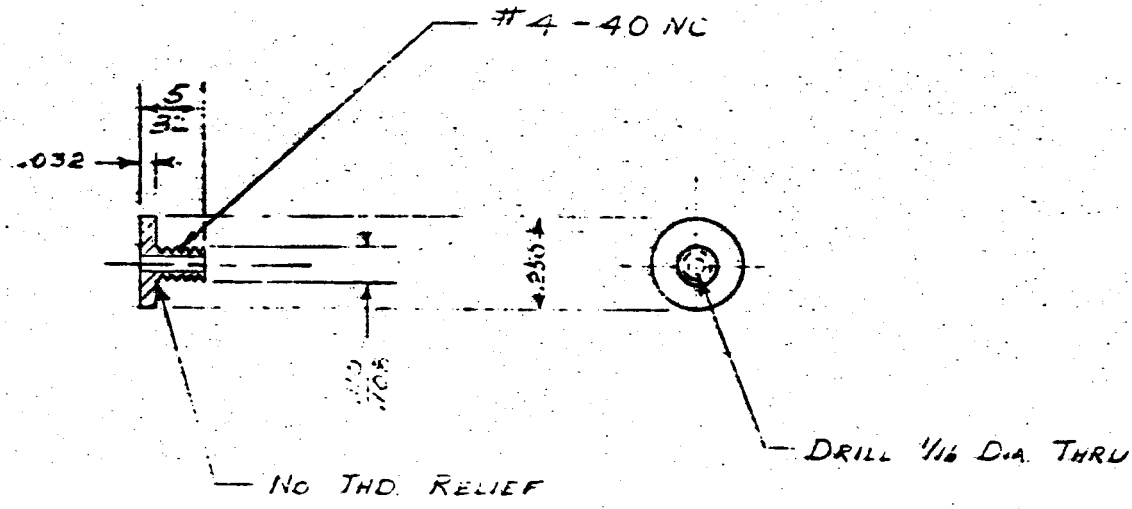

THREADED CAP

MATERIAL	SIZE	QUANT.	LET.	REVISIONS	DATE	BY
BRASS		1				

UNLESS OTHERWISE SPECIFIED ALL DIMENSIONS ARE:
FRACTIONAL ± 1/64"
DECIMAL ± .005"
ANGULAR ± 0° 30'

SUPERSEDED BY
SUPERSEDES
CORRECT FOR NO
FIRST INST. NO

THREADED CAP
FOR WALL THERMOCOUPLE
LUNAR SUB-SURFACE LOGGING SONDE
JOB # N 33552

TEXACO Inc.
RESEARCH AND TECHNICAL DEPARTMENT
EXPLORATION AND PRODUCTION RESEARCH DIVISION
BELLAIRE, TEXAS

DE. B.D.S. DR. J K TR.
CK. DATE: 5-25-61
SCALE: DOUBLE
ASSEMBLY NO RA 4449

U9508 74

ORDER No. 61-475

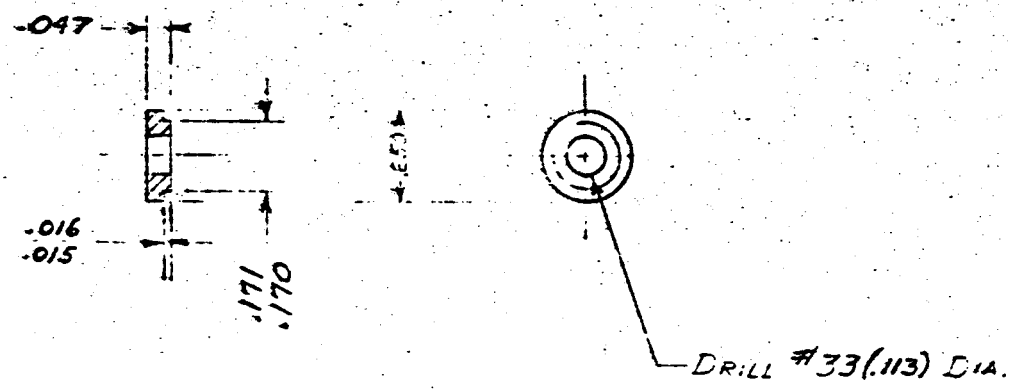

NOTE: SEE SUB-ASSEMBLY (14)

MATERIAL	SIZE	QUANT.	LET.	REVISIONS	DATE	BY
GLASS EPOXY		1				

UNLESS OTHERWISE SPECIFIED ALL DIMENSIONS ARE:
FRACTIONAL ± 1/64"
DECIMAL ± .005"
ANGULAR ± 0° 30'

SUPERSEDED BY
SUPERSEDES
CORRECT FOR NO
FIRST INST. NO

INSULATING SPACER
FOR WALL THERMOCOUPLE
LUNAR SUB-SURFACE LOGGING SONDE
JOB # N 33552

DE B.D.S. DR J.K. TR.
CK. DATE: 5-25-61
SCALE: DOUBLE
ASSEMBLY NO RA 9449

TEXACO Inc.
RESEARCH AND TECHNICAL DEPARTMENT
EXPLORATION AND PRODUCTION RESEARCH DIVISION
BELLAIRE, TEXAS

09500 75

(15)

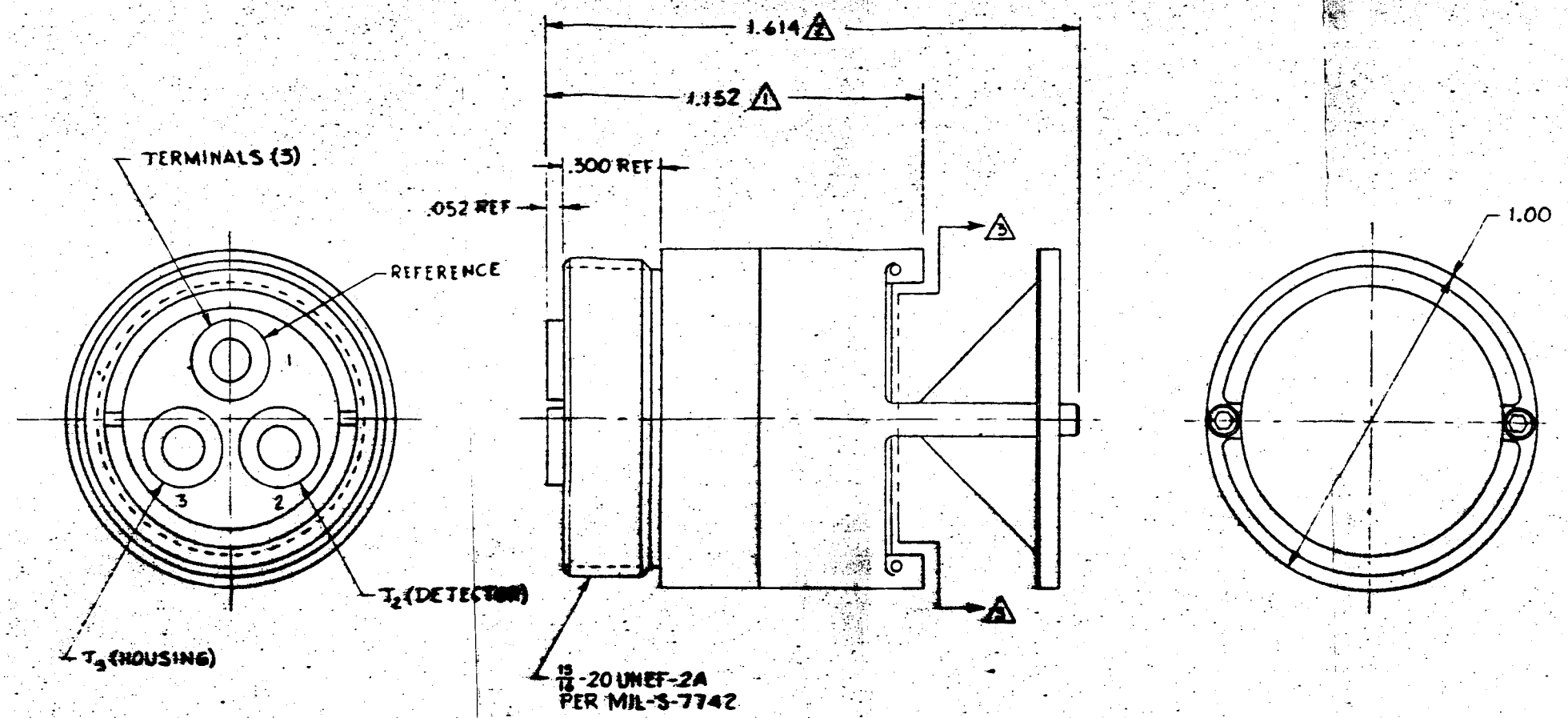

3 - SUB-SURFACE CONFIGURATION ATTACHMENT
2 - OVERALL LENGTH FOR SUB-SURFACE CONFIGURATION
1 - OVERALL LENGTH FOR SURFACE CONFIGURATION

MINNEAPOLIS-HONEYWELL No. SK67260

MATERIAL	SIZE	QUANT	UNLESS OTHERWISE SPECIFIED ALL DIMENSIONS ARE: FRACTIONAL ± 1/64" DECIMAL ± .005" ANGULAR ± 0°30'	DESIGNED	DATE	SCALE: 4X	FIRST INST. NO.	CORRECT FOR INST. NO.	SUPERSEDED BY	SUPERSEDES
				DRAWN M-H	DATE 5/19/61	TEXACO INC. RESEARCH AND TECHNICAL DEPARTMENT EXPLORATION AND PRODUCTION RESEARCH DIVISION BELLAIRE, TEXAS	RADIOMETER-LUNAR PROBE INSTALLATION (PRELIMINARY). LUNAR SUB-SURFACE LOGGING SONDE JOB # N33552		ASSEMBLY RA9449
				TRACED C.J.L	DATE 6/29/61				R9510
				CHECKED	DATE				

LET	REVISIONS	DATE	BY

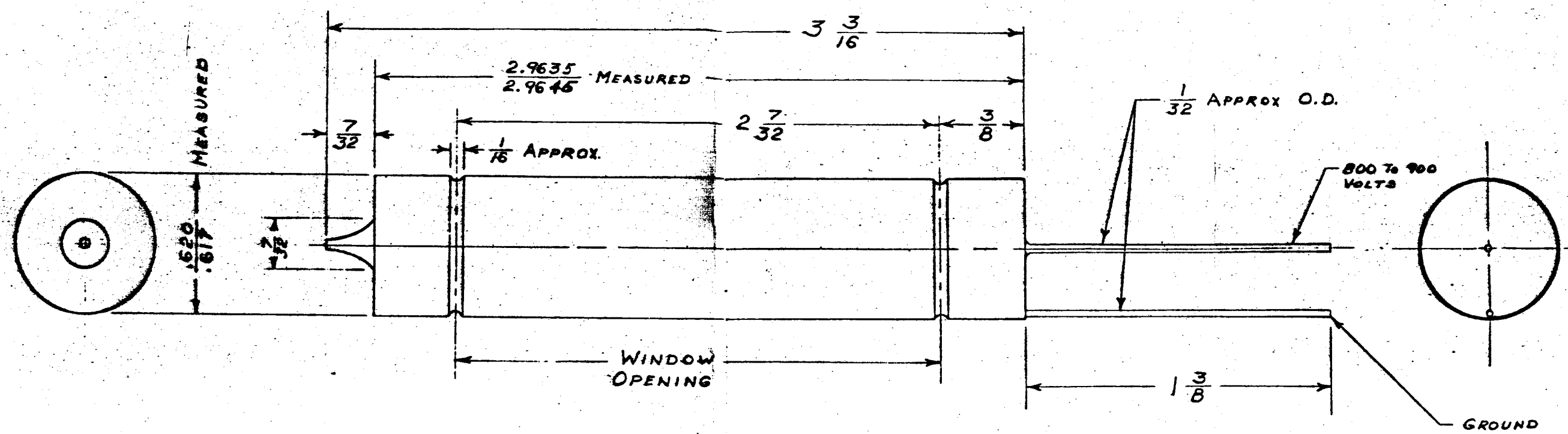

NOTE:
STOCK ITEM - ANTON ELECTRONICS LABORATORIES COUNTER #365, 6110 HALOGEN GAS (-100°C TO 150°C)

UNLESS OTHERWISE SPECIFIED ALL DIMENSIONS ARE:
FRACTIONAL ± 1/64" DECIMAL ± .005" ANGULAR ± 0° 30'

MATERIAL	SIZE	QUANT.	LET.	REVISIONS	DATE	BY

DESIGNED	DATE	SCALE: DOUBLE	FIRST INST. NO.	CORRECT FOR INST. NO.	SUPERSEDED BY / SUPERSEDES
DRAWN J.K.	DATE 21 JUNE '61	TEXACO RESEARCH AND TECHNICAL DEPARTMENT EXPLORATION AND PRODUCTION RESEARCH DIVISION BELLAIRE, TEXAS	GAMMA RAY COUNTER LUNAR SUB-SURFACE LOGGING SONDE JOB # N 33552		ASSEMBLY RA 9449
TRACED	DATE				R9511
CHECKED	DATE				

RE-ORDER No. 61-475

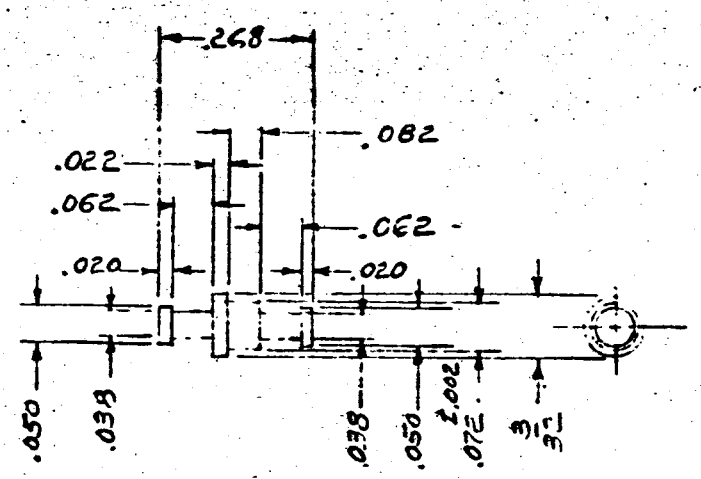

CTC PART No. X204E

NOTE:
STOCK ITEM - CAMBRIDGE THERMIONIC CORPORATION PART No. X2042

STOCK ITEM		6				
MATERIAL	SIZE	QUANT.	LET.	REVISIONS	DATE	BY

UNLESS OTHERWISE SPECIFIED ALL DIMENSIONS ARE:
FRACTIONAL ± 1/64"
DECIMAL ± .005"
ANGULAR ± 0° 30'

SUPERSEDED BY
SUPERSEDES
CORRECT FOR No.
FIRST INST. No

SOLDER STAND-OFF TERMINAL
LUNAR SUB-SURFACE LOGGING SONDE
JOB N 3355E

TEXACO Inc.
RESEARCH AND TECHNICAL DEPARTMENT
EXPLORATION AND PRODUCTION RESEARCH DIVISION
BELLAIRE, TEXAS

DE. BDS DR BDS TR.
CK. DATE: 12 NOV '61
SCALE: NONE
ASSEMBLY No RA 4449

U9512.78

RE-ORDER No. 61-475

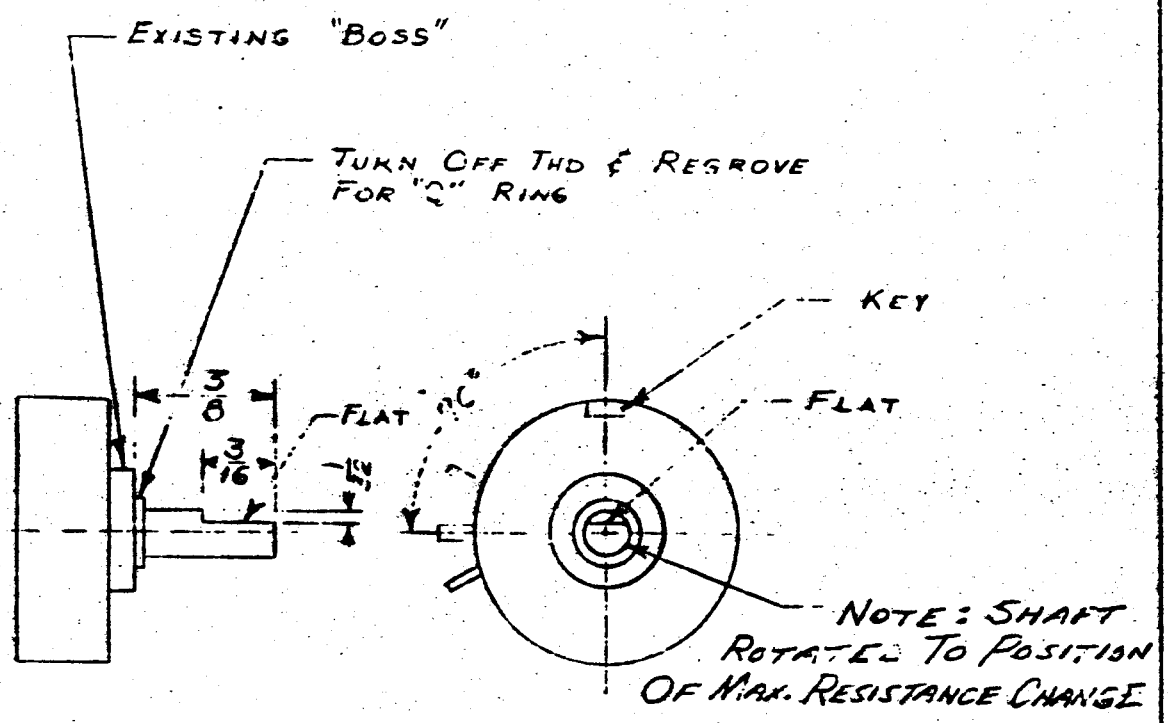

STOCK ITEM:
CENTRALAB JP-255
2.5 MEGOHMS TAPER C-1
POTENTIOMETER

MATERIAL	SIZE	QUANT.	LET.	REVISIONS	DATE	BY

UNLESS OTHERWISE SPECIFIED ALL DIMENSIONS ARE:
FRACTIONAL ± 1/64"
DECIMAL ± .005"
ANGULAR ± 0° 30'

SUPERSEDED BY
SUPERSEDES
CORRECT FOR NO.
FIRST INST. NO.

MODIFY POTENTIOMETER
LUNAR SUB-SURFACE LOGGING SONDE
JOB # N 33552

TEXACO Inc.
RESEARCH AND TECHNICAL DEPARTMENT
EXPLORATION AND PRODUCTION RESEARCH DIVISION
BELLAIRE, TEXAS

DE B.D.S. DR J.W.K. TR.
CK. DATE 5-24-61
SCALE: DOUBLE
ASSEMBLY NO. RA 9449

U 951 79

REORDER No. 61-475

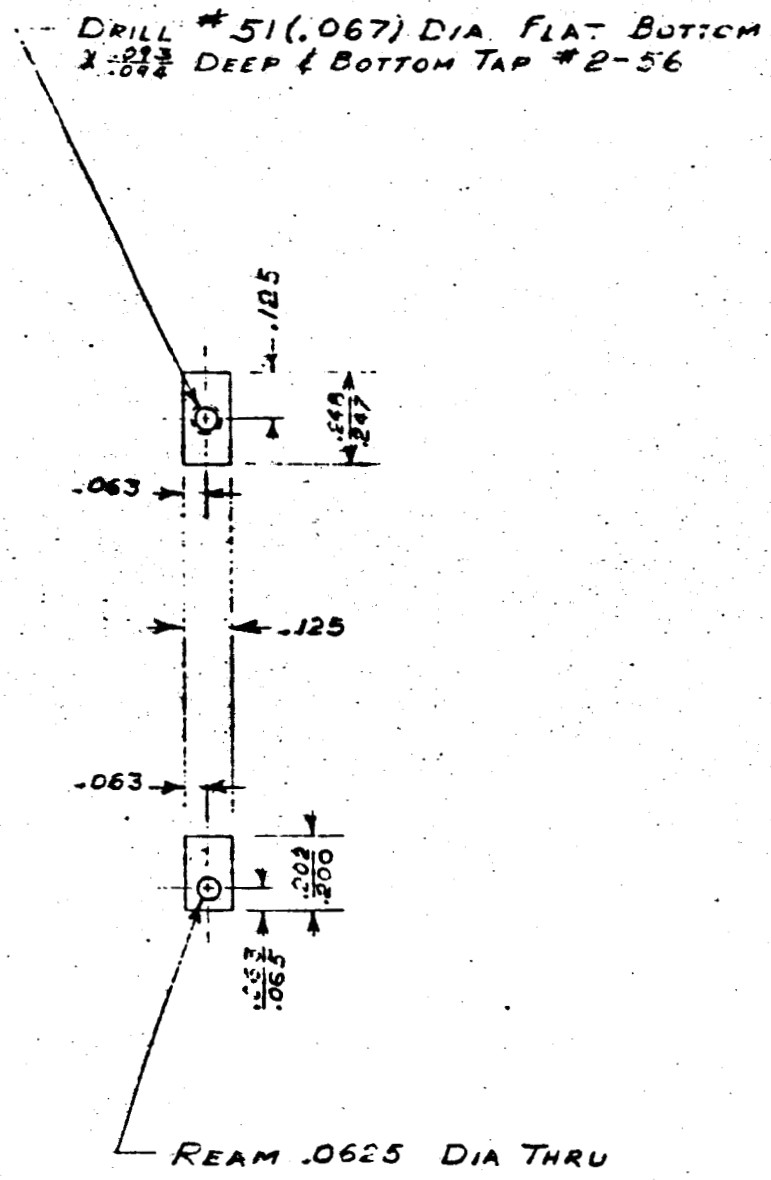

MATERIAL	SIZE	QUANT.	LET.	REVISIONS	DATE	BY
STAINLESS STEEL	302	1				

UNLESS OTHERWISE SPECIFIED ALL DIMENSIONS ARE:
FRACTIONAL ± 1/64"
DECIMAL ± .005"
ANGULAR ± 0° 30'

SUPERSEDED BY
SUPERSEDES
CORRECT FOR No.
FIRST INST. No.

PIVOT BLOCK
FOR DECENTRALIZER SPRING
LUNAR SUB-SURFACE LOGGING SONDE
JOB # N 33552

DE. B.D.S DR. J.K TR.
CK. DATE: 5-31-61
SCALE: DOUBLE
ASSEMBLY No. RA 9449

TEXACO Inc.
RESEARCH AND TECHNICAL DEPARTMENT
EXPLORATION AND PRODUCTION RESEARCH DIVISION
BELLAIRE, TEXAS

U9514 80

RE-ORDER No. 61-475

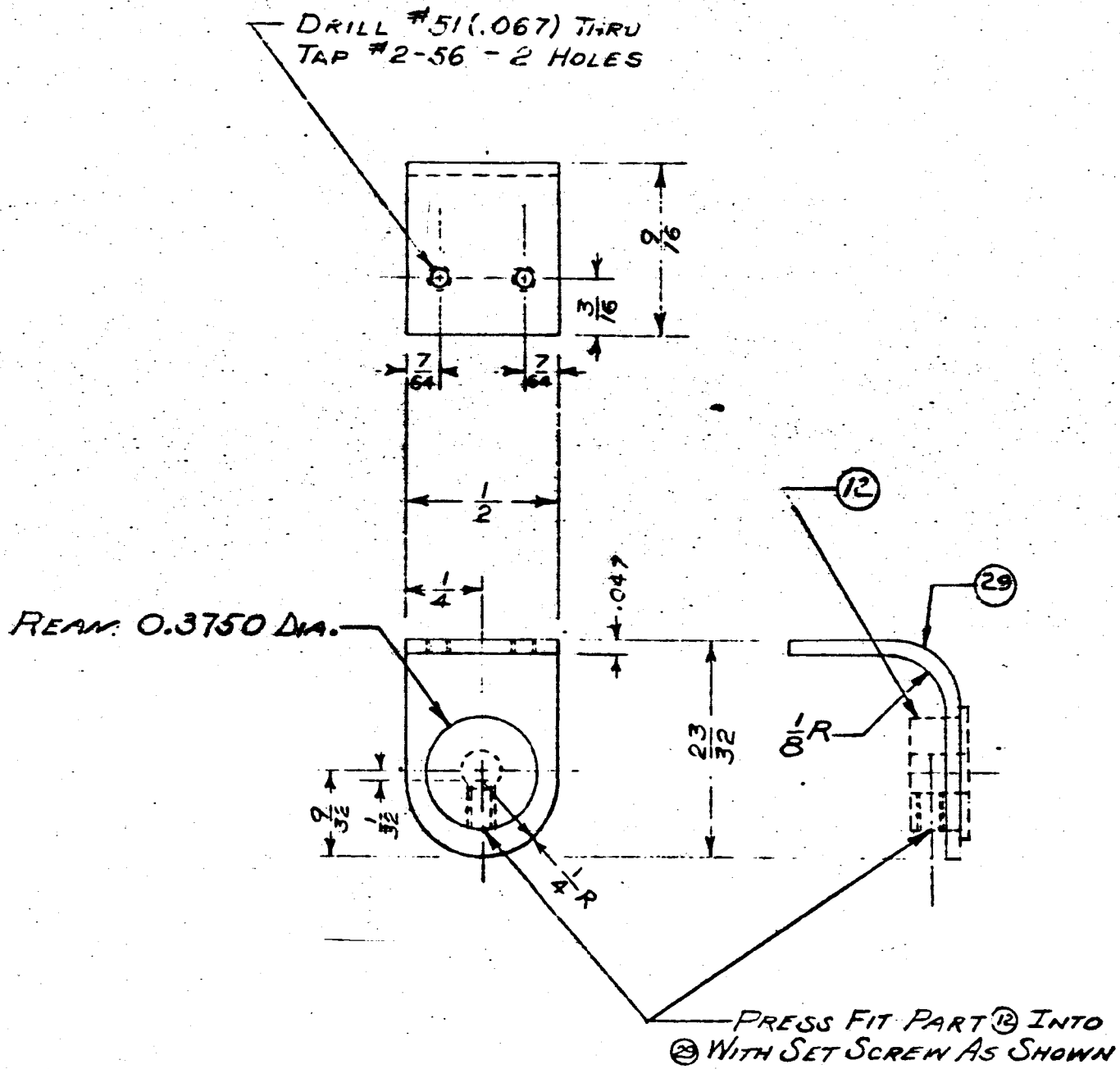

MATERIAL	SIZE	QUANT.	LET.	REVISIONS	DATE	BY
STAINLESS STEEL	304 OR 316	1				

UNLESS OTHERWISE SPECIFIED ALL DIMENSIONS ARE:
FRACTIONAL ± 1/64"
DECIMAL ± .005"
ANGULAR ± 0° 30'

SUPERSEDED BY
SUPERSEDES
CORRECT FOR No.
FIRST INST. No.

DECENTRALIZER SPRING BRACKET
LUNAR SUB-SURFACE LOGGING SONDE
JOB # N 33552

TEXACO Inc.
RESEARCH AND TECHNICAL DEPARTMENT
EXPLORATION AND PRODUCTION RESEARCH DIVISION
BELLAIRE, TEXAS

DE. B.D.S. DR. J.K. TR.
CK. DATE: 5-31-61
SCALE: DOUBLE
ASSEMBLY No. RA 9449

U9515 81

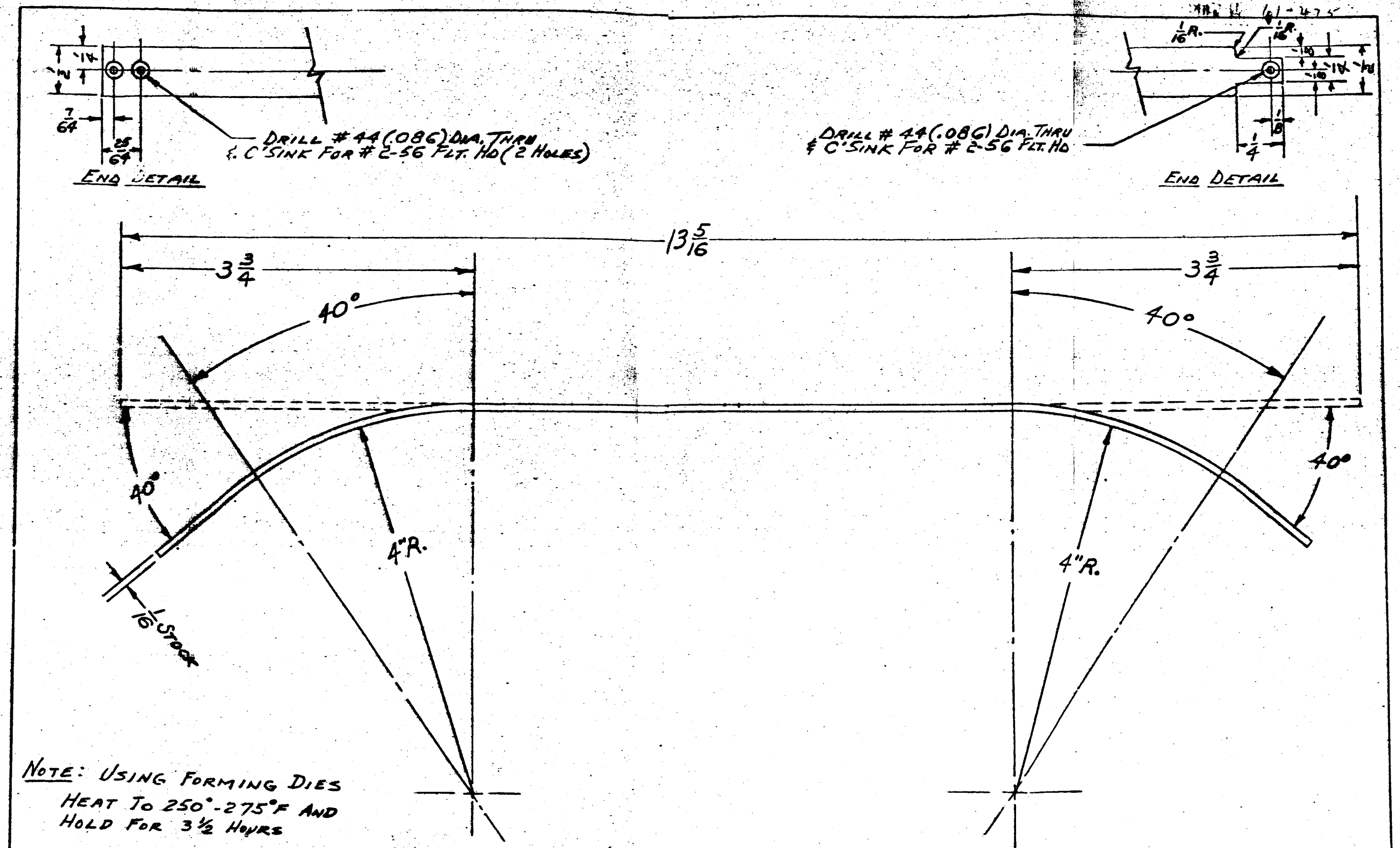

NOTE: USING FORMING DIES
HEAT TO 250°-275°F AND
HOLD FOR 3 1/2 HOURS

UNLESS OTHERWISE SPECIFIED ALL DIMENSIONS ARE:
FRACTIONAL ± 1/64" DECIMAL ± .005" ANGULAR ± 0° 30'

MATERIAL	SIZE	QUANT.	LET.	REVISIONS	DATE	BY
GLASS-EPOXY-G-11	1/16" x 1/2" x 13 5/16"	1				

DESIGNED BDS	DATE 15 MAY '61	SCALE: FULL SIZE	FIRST INST. NO.	CORRECT FOR INST. NO.
DRAWN BDS	DATE 1 JUNE '61		SUPERSEDED BY	SUPERSEDES
TRACED	DATE			
CHECKED	DATE			

TEXACO
RESEARCH AND TECHNICAL DEPARTMENT
EXPLORATION AND PRODUCTION RESEARCH DIVISION
BELLAIRE, TEXAS

DECENTRALIZER SPRING
LUNAR SUB-SURFACE LOGGING SONDE
JOB # N33552

ASSEMBLY RA9449

R9516

82

REORDER No. 61-475

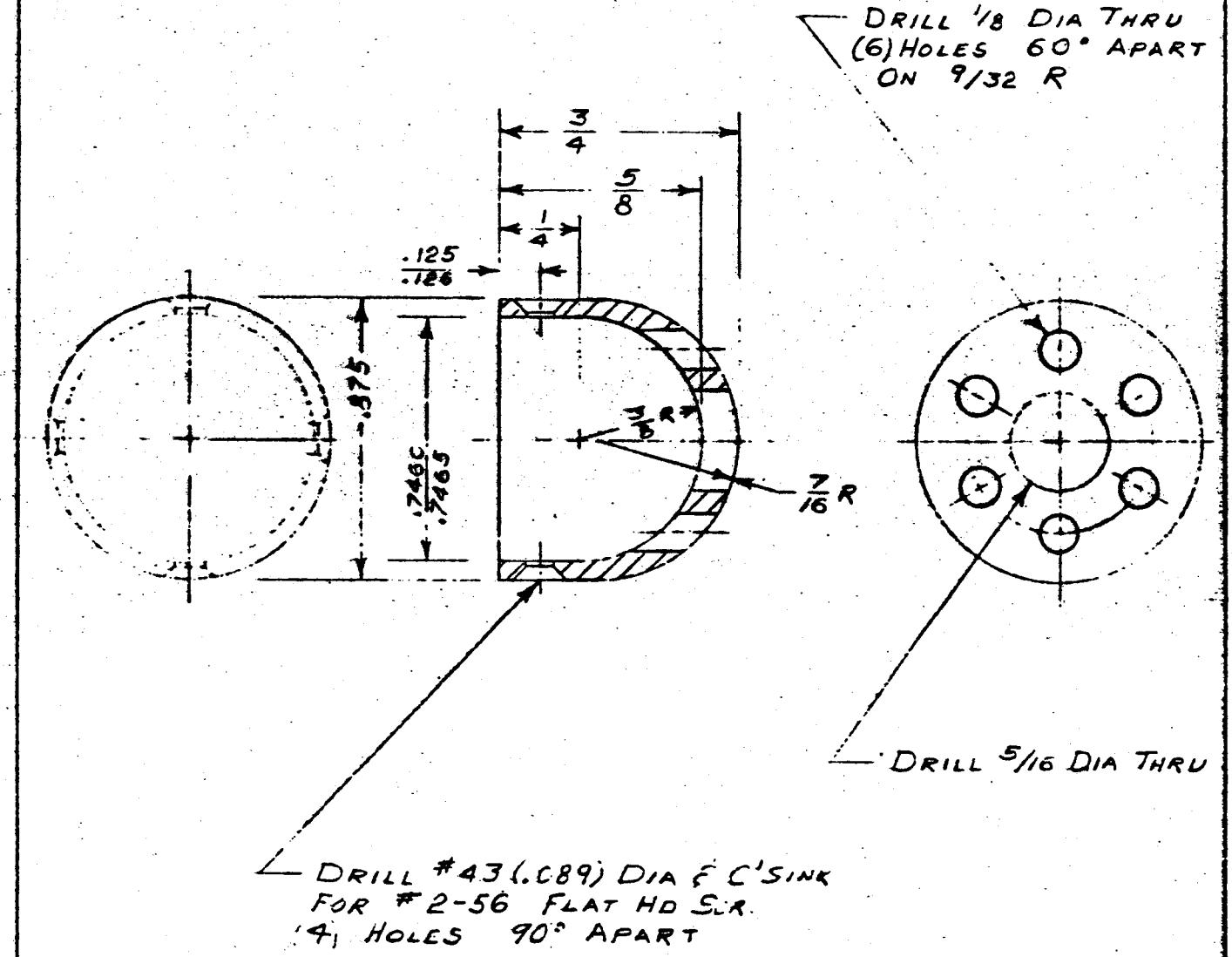

MATERIAL	SIZE	QUANT	LET.	REVISIONS	DATE	BY
ALUM 24S		1				

UNLESS OTHERWISE SPECIFIED ALL DIMENSIONS ARE:
FRACTIONAL ± 1/64"
DECIMAL ± .005"
ANGULAR ± 0° 30'

SUPERSEDED BY
SUPERSEDES
CORRECT FOR NO
FIRST INST. NO.

TOP CAP
LUNAR SUB-SURFACE LOGGING SONDE
JOB # N33552

TEXACO Inc.
RESEARCH AND TECHNICAL DEPARTMENT
EXPLORATION AND PRODUCTION RESEARCH DIVISION
BELLAIRE, TEXAS

DE B.D.S. DR J.K. TR
CK DATE 6-2-61
SCALE DOUBLE
ASSEMBLY No. RA 9449

U9517 83

RE-ORDER No. 61-475

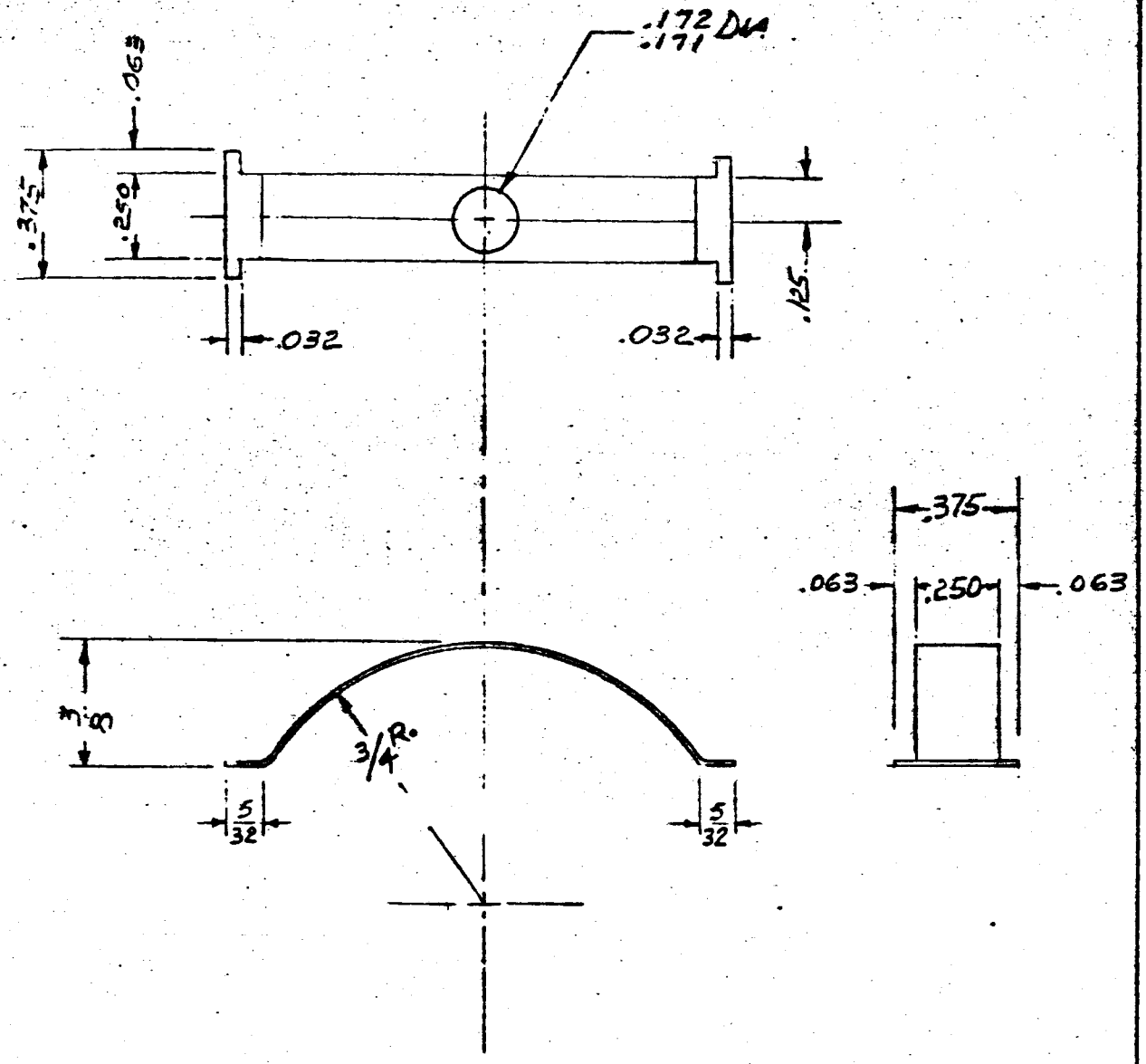

MAT: MAKE ONE FROM .005 THICK CARBON SPRING STRIP OR BE. COPPER
FLAT LENGTH = 1 15/16 " LONG

MATERIAL	SIZE	QUANT.	LET.	REVISIONS	DATE	BY
AS SHOWN	.005" x .375 x 1 1/16	1				

UNLESS OTHERWISE SPECIFIED, ALL DIMENSIONS ARE:
FRACTIONAL ± 1/64"
DECIMAL ± .005"
ANGULAR ± 0° 30'

SUPERSEDED BY
SUPERSEDES
CORRECT FOR NO.
FIRST INST. NO.

WALL THERMOCOUPLE SPRING
LUNAR SUB-SURFACE LOGGING SONDE
JOB # N3355C

DE. BDS DR. BDS TR.
CK. DATE: 2 JUNE '61
SCALE: DOUBLE SIZE
ASSEMBLY No. RA 9449

TEXACO Inc.
RESEARCH AND TECHNICAL DEPARTMENT
EXPLORATION AND PRODUCTION RESEARCH DIVISION
BELLAIRE, TEXAS

U9518 84

RE-ORDER No. 61-475

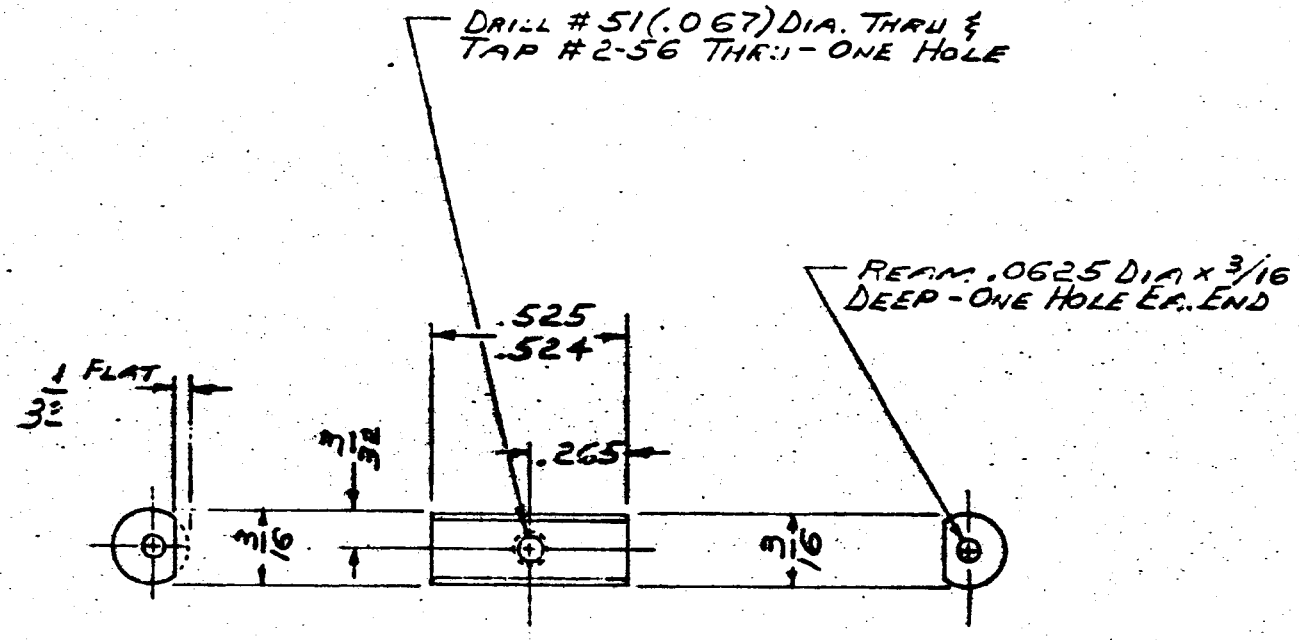

MATERIAL	SIZE	QUANT.	LET.	REVISIONS	DATE	BY
ALUM. 24S	3/16 DIA. x 5/8 LG.	2				

UNLESS OTHERWISE SPECIFIED ALL DIMENSIONS ARE:
FRACTIONAL ± 1/64"
DECIMAL ± .005"
ANGULAR ± 0° 30'

SUPERSEDED BY
SUPERSEDES
CORRECT FOR NO.
FIRST INST. NO.

PIVOT SHAFT
FOR GEOPHONE SPRING
LUNAR SUB-SURFACE LOGGING SONDE
JOB # 1133552

TEXACO Inc.
RESEARCH AND TECHNICAL DEPARTMENT
EXPLORATION AND PRODUCTION RESEARCH DIVISION
BELLAIRE, TEXAS

DE. BDS DR. BDS TR.
CK. DATE: 5 JUNE 61
SCALE: DOUBLE
ASSEMBLY NO. RA 9449

U9519 R5

(24)

ENGINEER No. 61-475

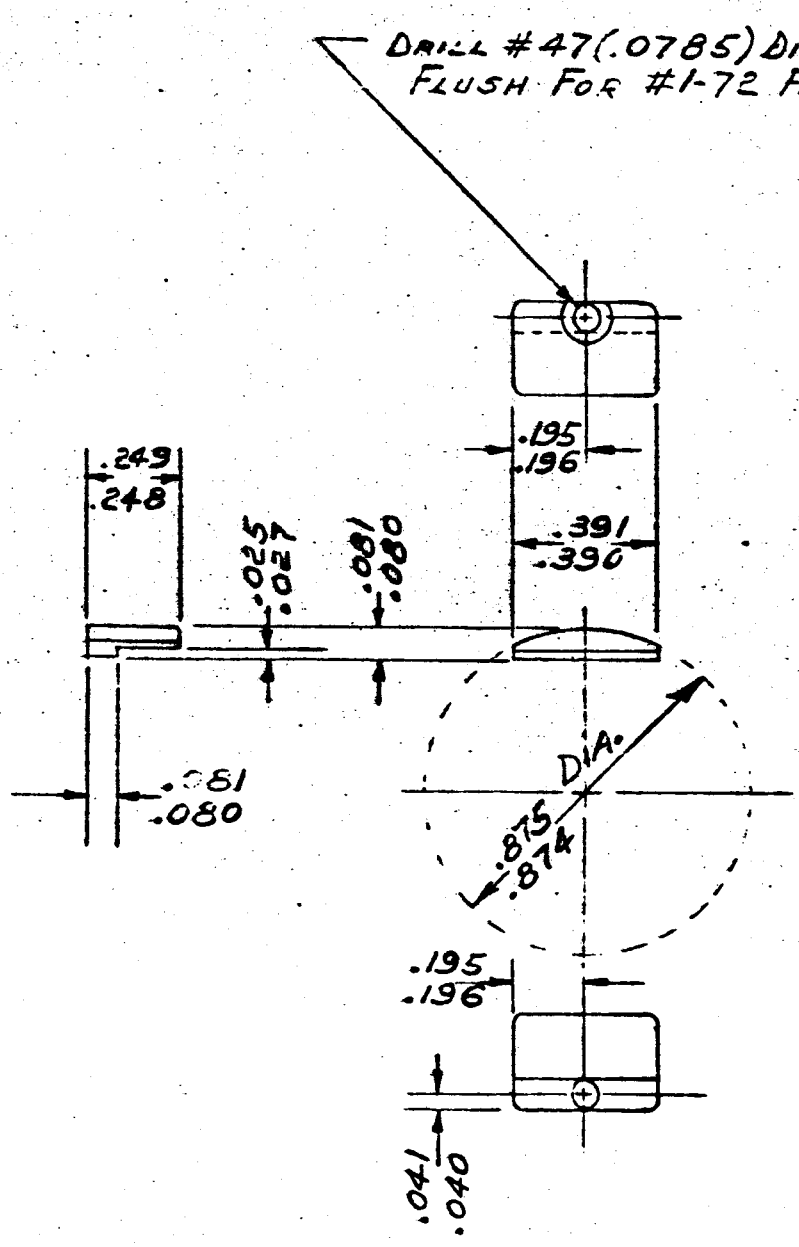

MATERIAL	SIZE	QUANT.	LET.	REVISIONS	DATE	BY
ALUM. 24S	AS SHOWN	2				

UNLESS OTHERWISE SPECIFIED ALL DIMENSIONS ARE:
FRACTIONAL ± 1/64"
DECIMAL ± .005"
ANGULAR ± 0° 30'

SUPERSEDED BY
SUPERSEDES
CORRECT FOR NO.
FIRST INST. NO.

SPRING RETAINER
FOR WALL THERMOCOUPLE
LUNAR SUB-SURFACE LOGGING SONDE
JOB # N53552

TEXACO Inc.
RESEARCH AND TECHNICAL DEPARTMENT
EXPLORATION AND PRODUCTION RESEARCH DIVISION
BELLAIRE, TEXAS

J.L.F. DR. BDS TR.
CK. DATE: 6 JUNE '61
SCALE: DOUBLE
ASSEMBLY NO. RA 9449

U9520 86

DRAWER NO. 61-475

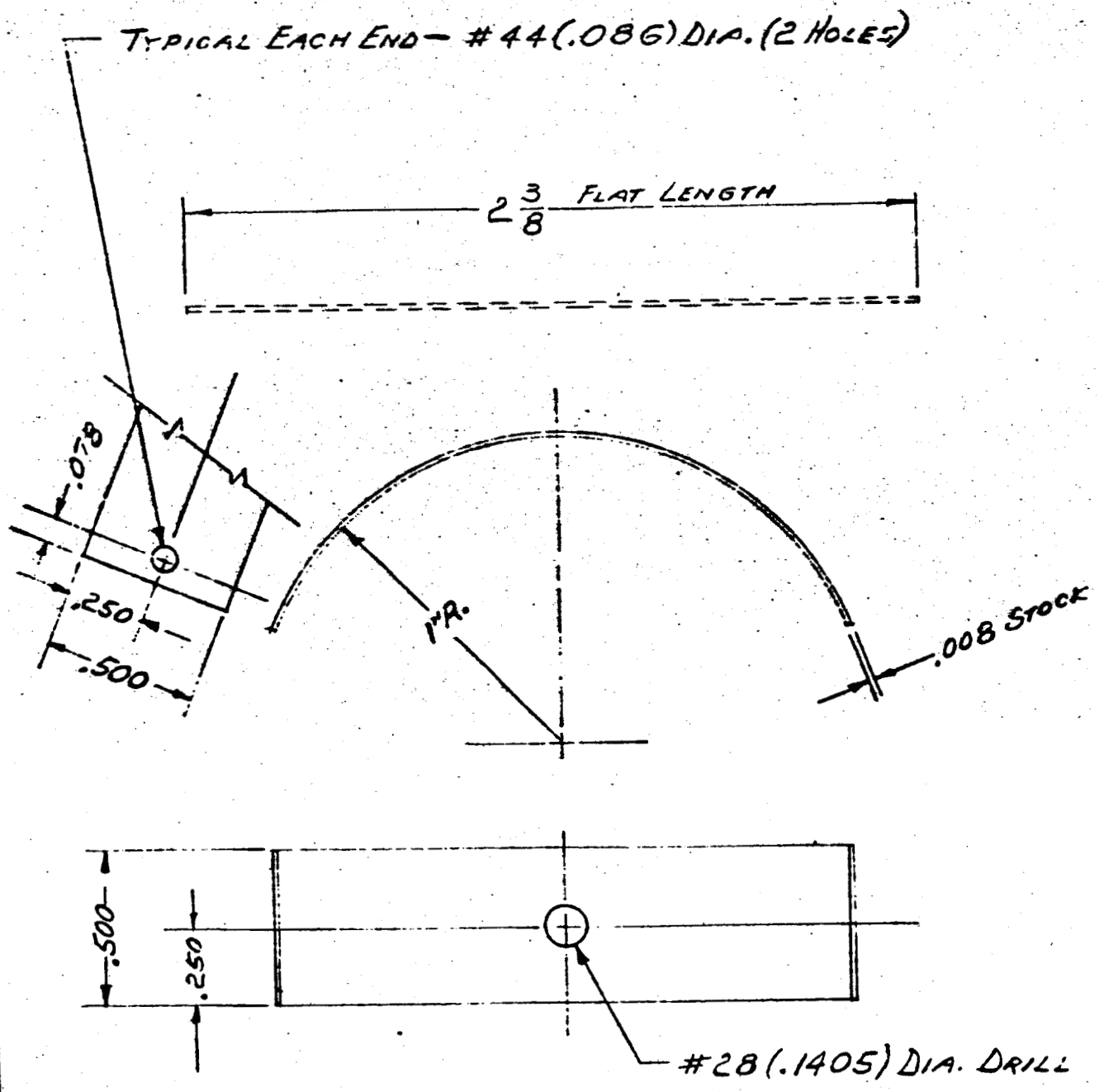

FORM FROM .008 CARBON STEEL SPRING STRIP

MATERIAL	SIZE	QUANT.	LET.	REVISIONS	DATE	BY
	.008 × 1/2 × 2 3/8	1				

UNLESS OTHERWISE SPECIFIED ALL DIMENSIONS ARE:
FRACTIONAL ± 1/64"
DECIMAL ± .005"
ANGULAR ± 0° 30'

SUPERSEDED BY
SUPERSEDES
CORRECT FOR NO.
FIRST INST. NO.

GEOPHONE SPRING
LUNAR SUB-SURFACE LOGGING SONDE
JOB # N33552

DE. KDS DR. BDS TR.
CK. DATE: 6 JUNE '61
SCALE: DOUBLE
ASSEMBLY NO. RA 9449

TEXACO Inc.
RESEARCH AND TECHNICAL DEPARTMENT
EXPLORATION AND PRODUCTION RESEARCH DIVISION
BELLAIRE, TEXAS

U 9521-87

MASTER No. 61-475

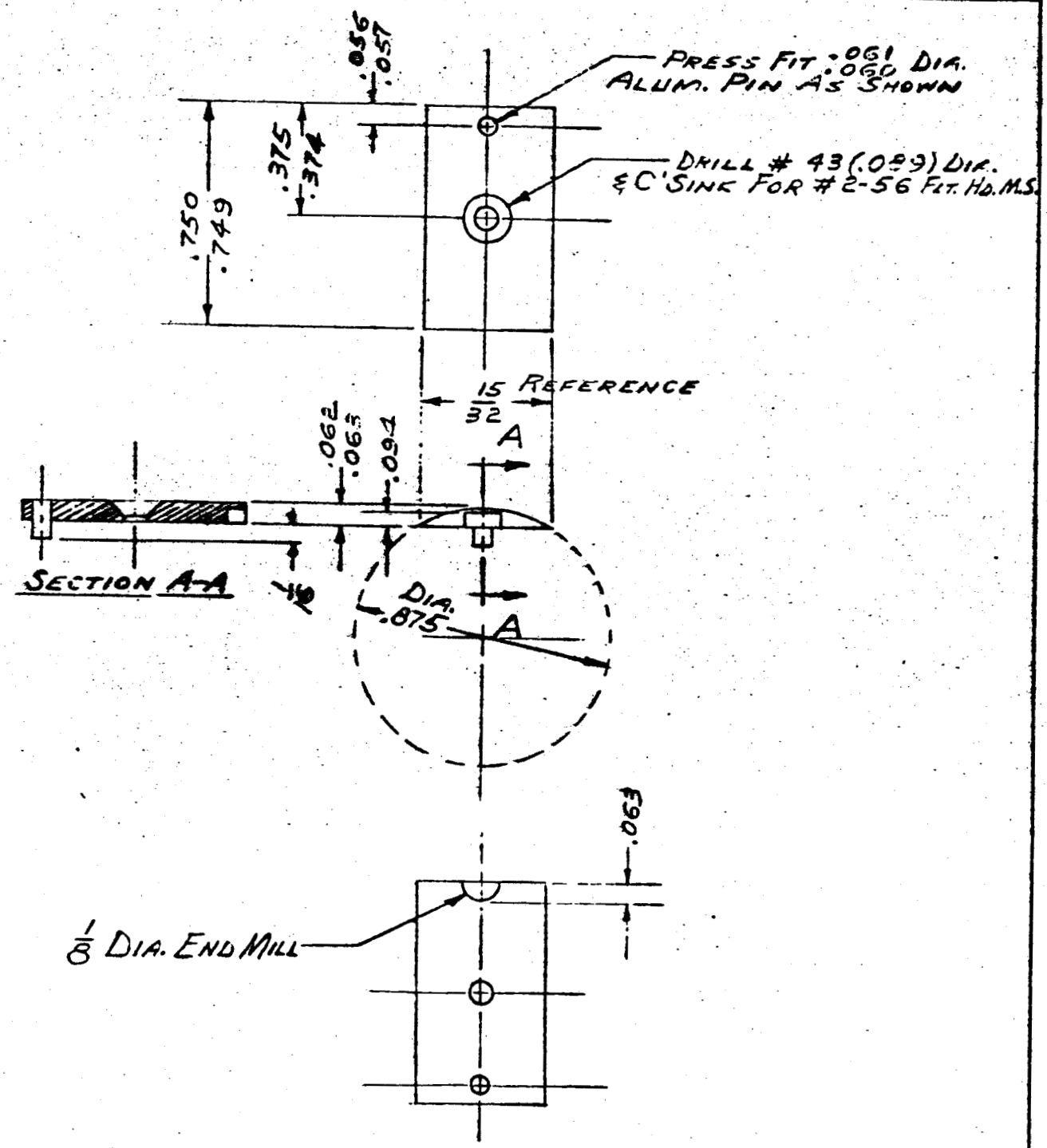

MATERIAL	SIZE	QUANT.	LET.	REVISIONS	DATE	BY
MALLORY 1000	AS SHOWN	1				

UNLESS OTHERWISE SPECIFIED ALL DIMENSIONS ARE:
FRACTIONAL ± 1/64"
DECIMAL ± .005"
ANGULAR ± 0° 30'

SUPERSEDED BY
SUPERSEDES
CORRECT FOR No.
FIRST INST. No.

SOURCE RETAINER
LUNAR SUB-SURFACE LOGGING SONDE
JOB # N33552

TEXACO Inc.
RESEARCH AND TECHNICAL DEPARTMENT
EXPLORATION AND PRODUCTION RESEARCH DIVISION
BELLAIRE, TEXAS

DE. J.L.F. DR. B.D.S. TR.
CK. DATE: 8 JUNE '61
SCALE: DOUBLE
ASSEMBLY No. RA 9449

U9522 88

RE ORDER No. 61-475

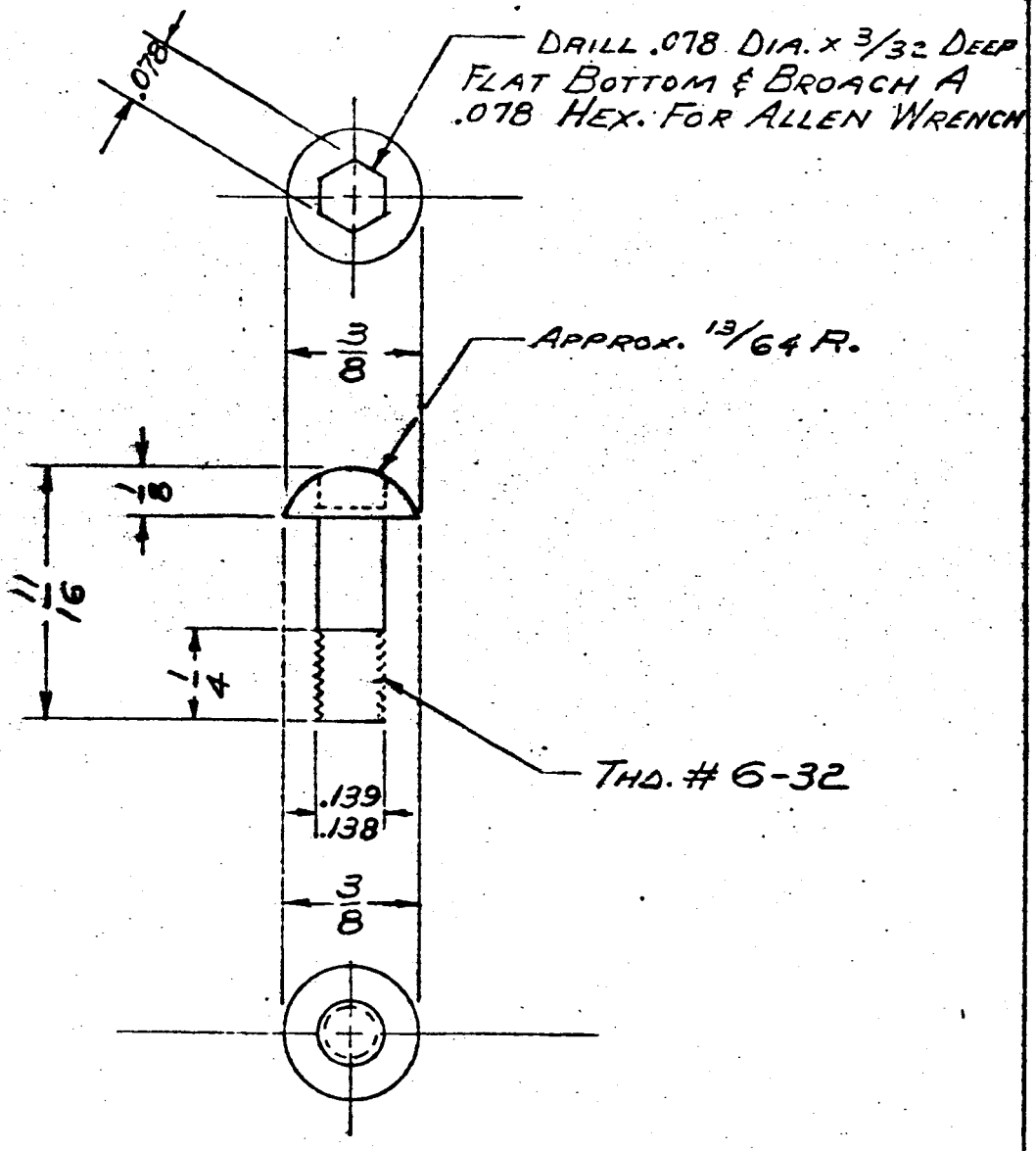

MATERIAL	SIZE	QUANT.	LET.	REVISIONS	DATE	BY
STAINLESS 302	AS SHOWN	1				

UNLESS OTHERWISE SPECIFIED ALL DIMENSIONS ARE:
FRACTIONAL ± 1/64"
DECIMAL ± .005"
ANGULAR ± 0° 30'

SUPERSEDED BY
SUPERSEDES
CORRECT FOR No.
FIRST INST. No.

ACCELEROMETER MOUNT SCREW
LUNAR SUB-SURFACE LOGGING SONDE
JOB # N33552

DE. BDS | DR. BDS | TR.
CK. | DATE: 8 JUNE '61
SCALE: DOUBLE
ASSEMBLY No. RA 9443

TEXACO Inc.
RESEARCH AND TECHNICAL DEPARTMENT
EXPLORATION AND PRODUCTION RESEARCH DIVISION
BELLAIRE, TEXAS

U9523 89
(2D)

RECORDER No. 61-475

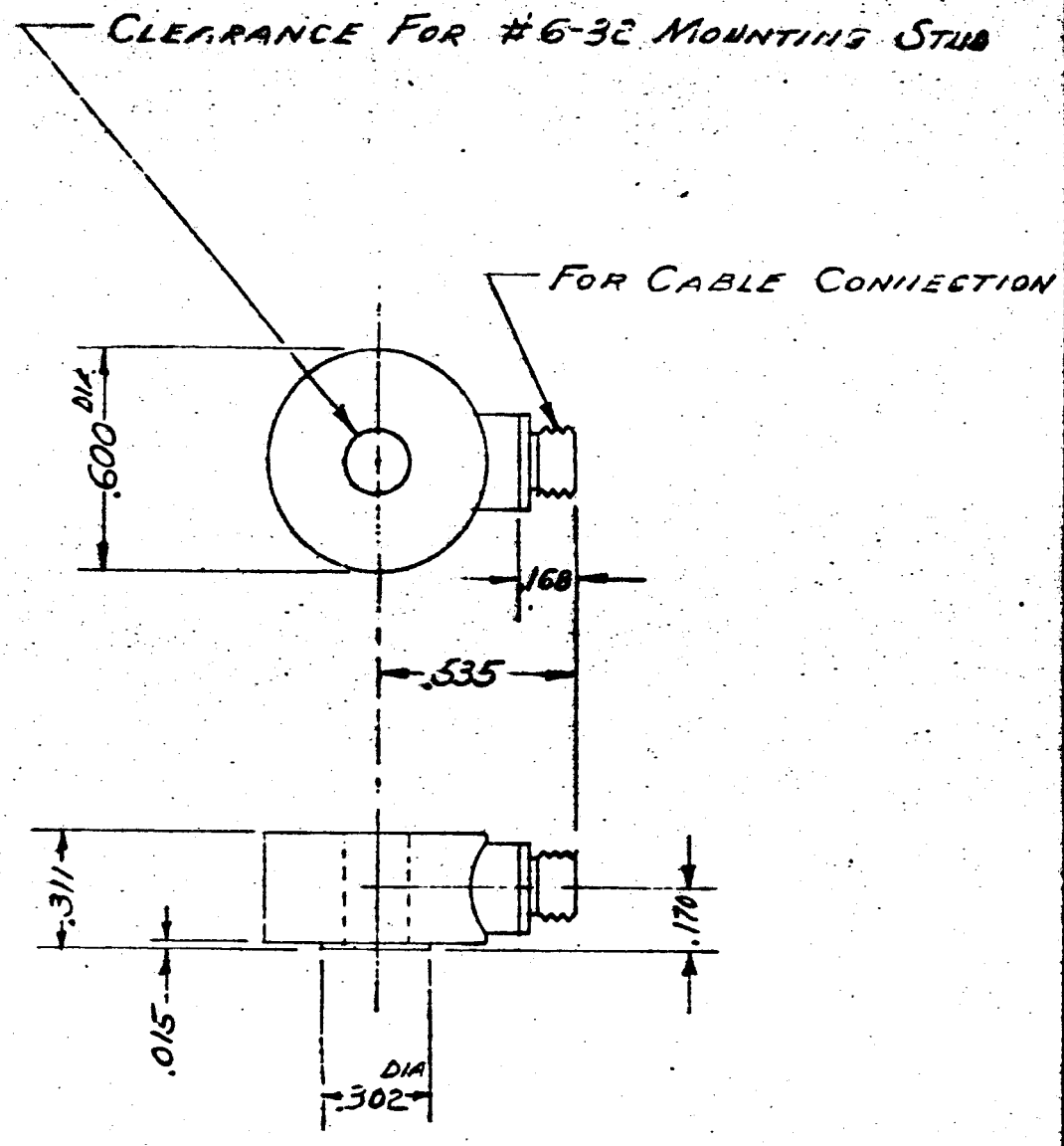

STOCK ITEM:
MODEL 2221C ACCELEROMETER
ENDEVCO CORP. — PASADENA, CALIFORNIA.

MATERIAL	SIZE	QUANT.	LET.	REVISIONS	DATE	BY
		1.				

UNLESS OTHERWISE SPECIFIED ALL DIMENSIONS ARE:
FRACTIONAL ± 1/64"
DECIMAL ± .005"
ANGULAR ± 0° 30'

SUPERSEDED BY
SUPERSEDES
CORRECT FOR NO.
FIRST INST. NO.

ACCELEROMETER
LUNAR SUB-SURFACE LOGGING SONDE
JOB # N33552

DE. DR. BDS TR.
CK. DATE: 8 JUNE '61
SCALE: DOUBLE
ASSEMBLY NO. RA 9449

TEXACO INC.
RESEARCH AND TECHNICAL DEPARTMENT
EXPLORATION AND PRODUCTION RESEARCH DIVISION
BELLAIRE, TEXAS

U9524 90

ORDER No. 61-475

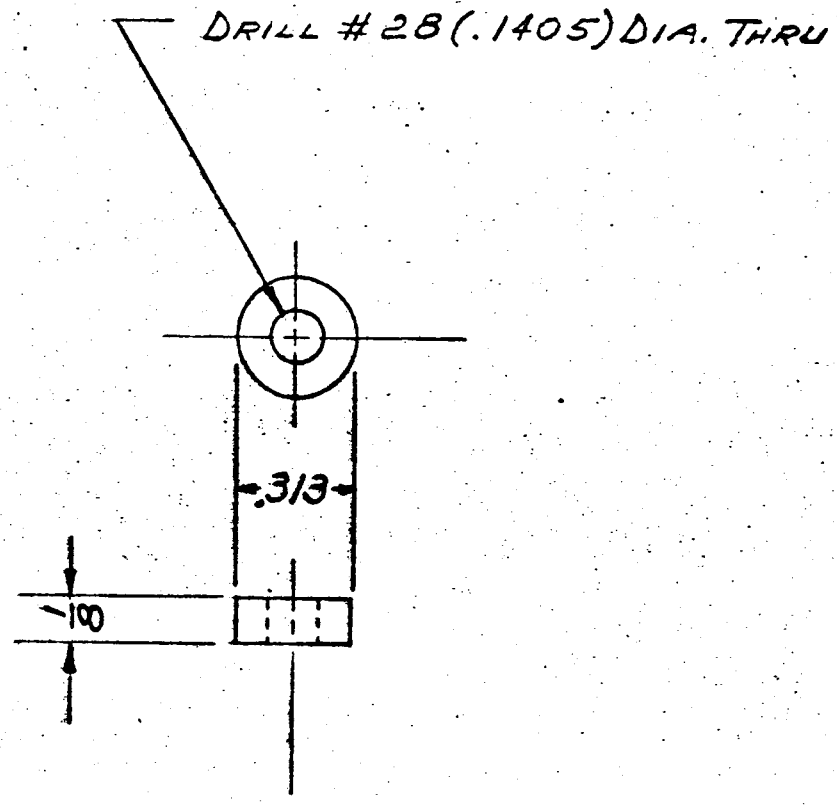

MATERIAL	SIZE	QUANT.	LET.	REVISIONS	DATE	BY
STAINLESS 302	AS SHOWN	1				

UNLESS OTHERWISE SPECIFIED ALL DIMENSIONS ARE:
FRACTIONAL ± 1/64"
DECIMAL ± .005"
ANGULAR ± 0° 30'

SUPERSEDED BY
SUPERSEDES
CORRECT FOR No.
FIRST INST. No.

ACCELEROMETER SPACER
LUNAR SUB-SURFACE LOGGING SONDE
JOB # N33552

DE. JLF DR. BDS TR.
CK. DATE: 8 JUNE '61
SCALE: DOUBLE
ASSEMBLY No. RA9449

TEXACO Inc.
RESEARCH AND TECHNICAL DEPARTMENT
EXPLORATION AND PRODUCTION RESEARCH DIVISION
BELLAIRE, TEXAS

U9525 391

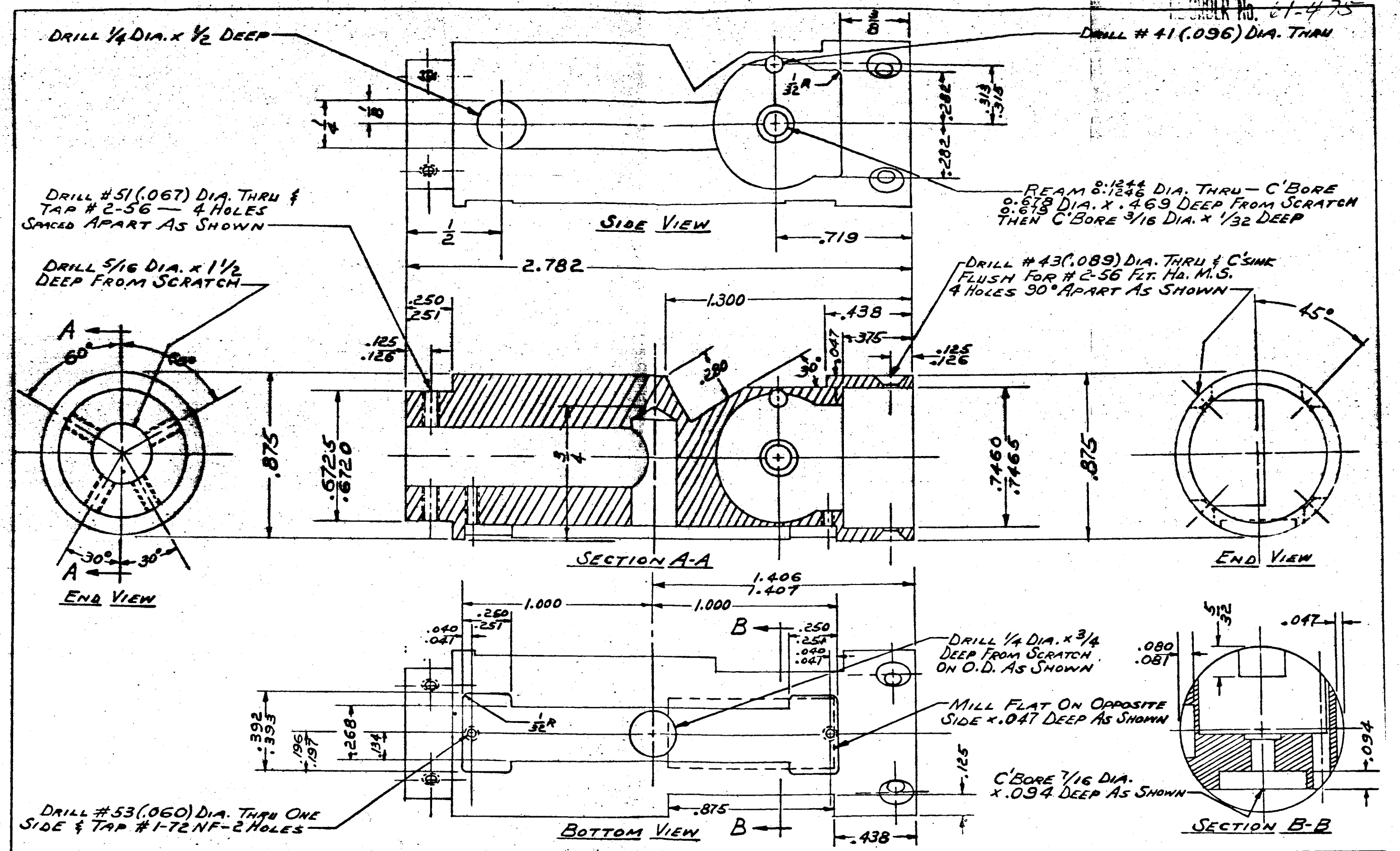

UNLESS OTHERWISE SPECIFIED ALL DIMENSIONS ARE:
FRACTIONAL ± 1/64" DECIMAL ± .005" ANGULAR ± 0° 30'

MATERIAL	SIZE	QUANT.	LET.	REVISIONS	DATE	BY
ALUMINUM 24S	1" DIA. x 3" LONG	1				

DESIGNED BDS	DATE 15 JUNE '61	SCALE: DOUBLE SIZE	FIRST INST. NO.	CORRECT FOR INST. NO.	SUPERSEDED BY	SUPERSEDES DWG # 11
DRAWN BDS	DATE 19 JUNE '61	TEXACO RESEARCH AND TECHNICAL DEPARTMENT EXPLORATION AND PRODUCTION RESEARCH DIVISION BELLAIRE, TEXAS	WALL THERMOCOUPLE & POTENTIOMETER SECTION LUNAR SUB-SURFACE LOGGING SONDE JOB # N33552		ASSEMBLY RA9449
TRACED	DATE				R9526
CHECKED	DATE				

RE-ORDER No. 61-475

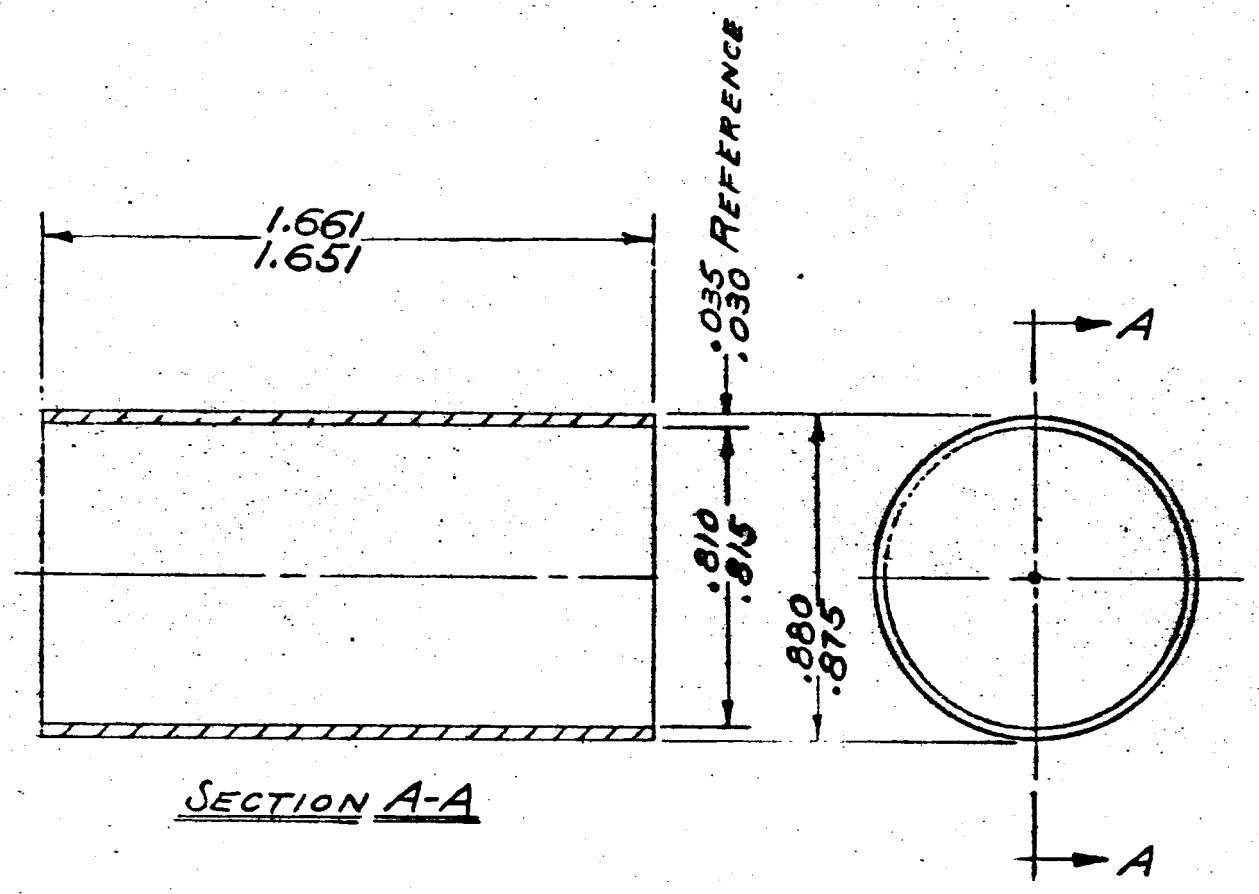

NOTE:
TO BE MADE IN HALVES OR FORMED WITH SINGLE SEAM AS DEEMED ADVISABLE — MATERIAL KRS-5

MATERIAL	SIZE	QUANT.	LET.	REVISIONS	DATE	BY
	AS SHOWN	1				

UNLESS OTHERWISE SPECIFIED ALL DIMENSIONS ARE:
FRACTIONAL ± 1/64"
DECIMAL ± .005"
ANGULAR ± 0° 30'

SUPERSEDED BY
SUPERSEDES
CORRECT FOR NO.
FIRST INST. NO.

CYLINDER
LAMP & SHIELD SECTION
LUNAR SUB-SURFACE LOGGING SONDE
JOB # N33552

TEXACO Inc.
RESEARCH AND TECHNICAL DEPARTMENT
EXPLORATION AND PRODUCTION RESEARCH DIVISION
BELLAIRE, TEXAS

DR. R.E.K. DR. B.D.S. TR.
CK. DATE: 19 JUNE '61
SCALE: DOUBLE SIZE
ASSEMBLY NO. RA 9449

U9527 93

RE-ISSUED 61-475

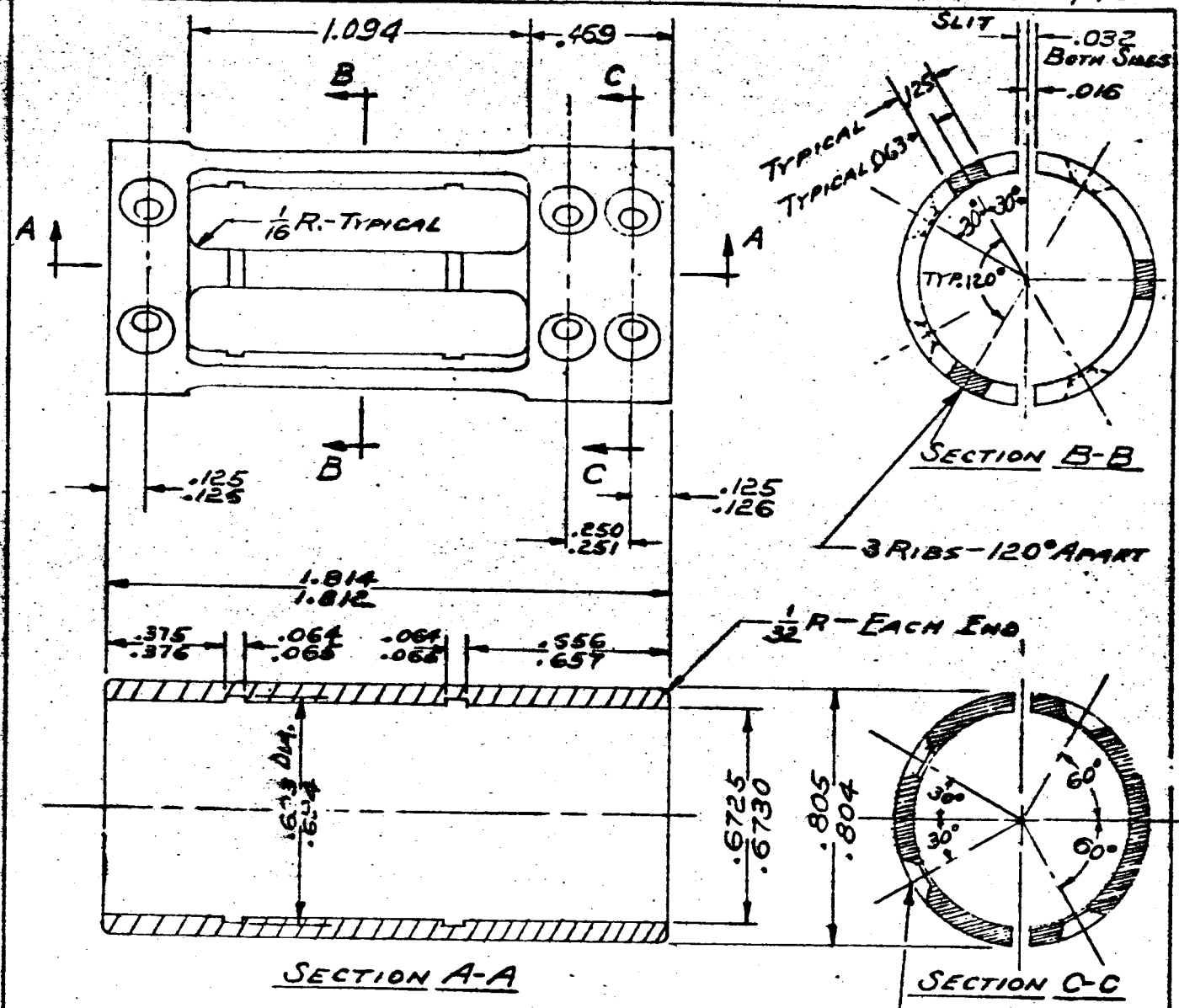

DRILL # 43 (.089) DIA. THRU & C'SINK FLUSH FOR #2-56 FLT. HD. M.S. — 4 HOLES SPACED AS SHOWN EACH SECTION — TOTAL OF 12 HOLES

MATERIAL	SIZE	QUANT.	LET.	REVISIONS	DATE	BY
STAINLESS STEEL 302	1" DIA x 2" LONG	1				

UNLESS OTHERWISE SPECIFIED ALL DIMENSIONS ARE:
- FRACTIONAL ± 1/64"
- DECIMAL ± .005"
- ANGULAR ± 0° 30'

SUPERSEDED BY
SUPERSEDES
CORRECT FOR NO.
FIRST INST. NO.

SHIELD HOUSING
LAMP & SHIELD SECTION
LUNAR SUB-SURFACE LOGGING SONDE
JOB # N33552

TEXACO INC.
RESEARCH AND TECHNICAL DEPARTMENT
EXPLORATION AND PRODUCTION RESEARCH DIVISION
BELLAIRE, TEXAS

DR. R.E.K. DR. B.D.S. TR.
CK. DATE: 20 JUNE '61
SCALE: DOUBLE SIZE
ASSEMBLY NO. RA9449

U9528 94

RE-ORDER No. 61-475

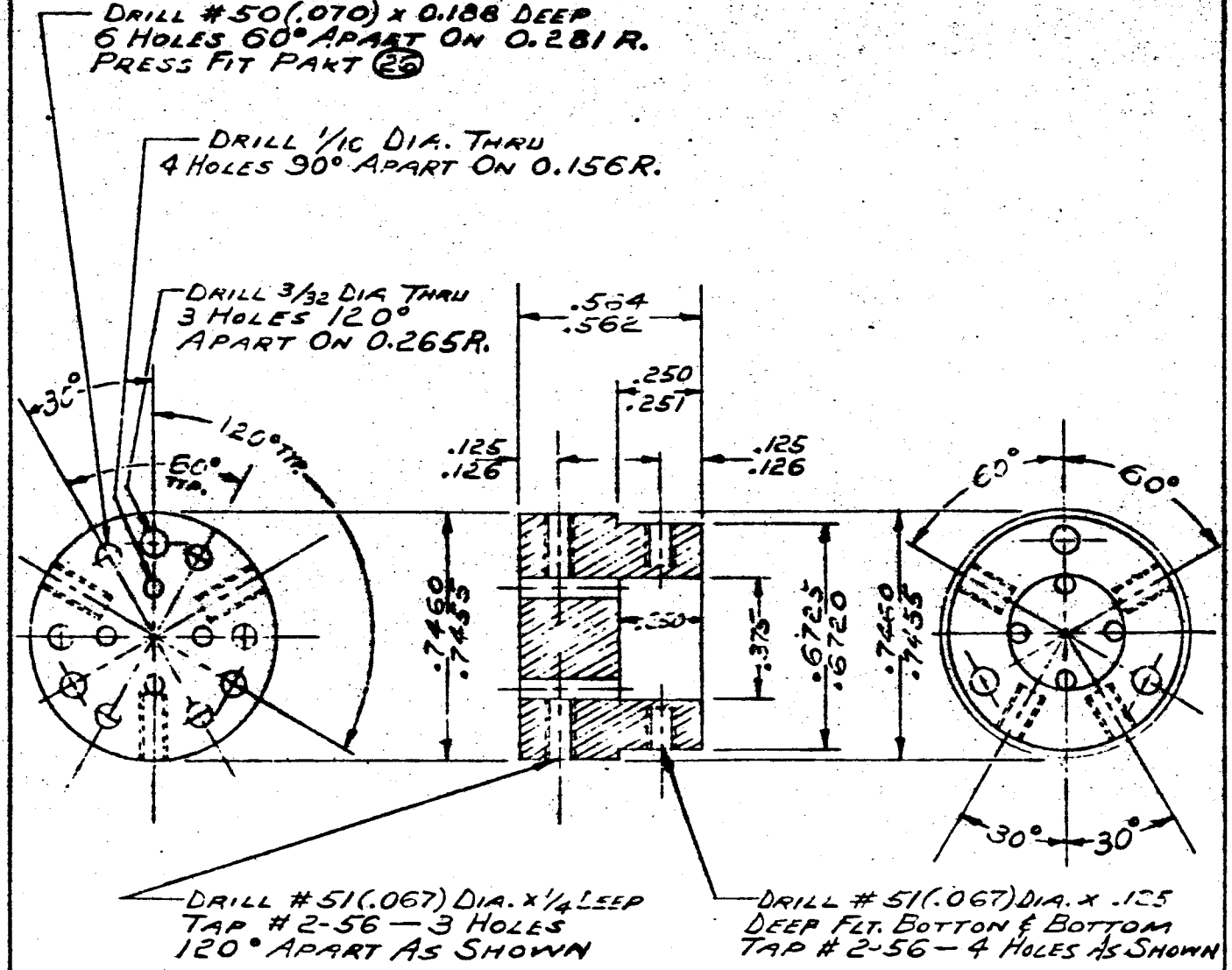

SUPERSEDES 16

MATERIAL	SIZE	QUANT.	LET.	REVISIONS	DATE	BY
GLASS-EPOXY	1" DIA. x 3/4 LONG	1		–		

UNLESS OTHERWISE SPECIFIED ALL DIMENSIONS ARE:
FRACTIONAL ± 1/64"
DECIMAL ± .005"
ANGULAR ± 0° 30'

SUPERSEDED BY
SUPERSEDES
CORRECT FOR No.
FIRST INST. No

BULB HOLDER
LAMP & SHIELD SECTION
LUNAR SUB-SURFACE LOGGING SONDE
JOB # N33552

TEXACO Inc.
RESEARCH AND TECHNICAL DEPARTMENT
EXPLORATION AND PRODUCTION RESEARCH DIVISION
BELLAIRE, TEXAS

DE. BDS DR. BDS TR.
CK. DATE: 20 JUNE '61
SCALE: DOUBLE SIZE
ASSEMBLY No. RA 3449

U 9520 95

61-475

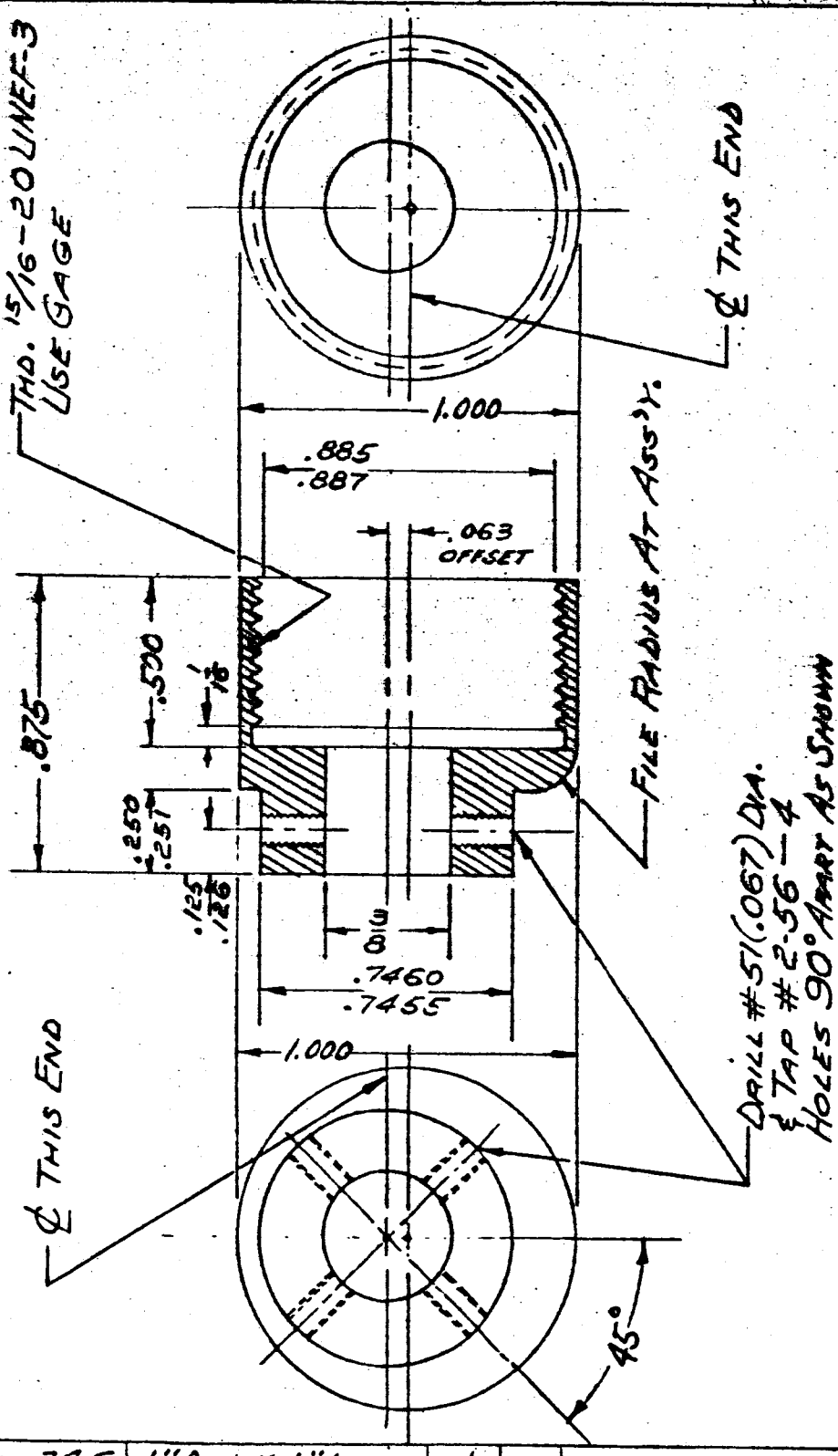

MATERIAL	SIZE	QUANT.	LET.	REVISIONS	DATE	BY
ALUMINUM 24S	1" DIA x 1" LONG	1				

UNLESS OTHERWISE SPECIFIED ALL DIMENSIONS ARE:
FRACTIONAL ± 1/64"
DECIMAL ± .005"
ANGULAR ± 0° 30'

SUPERSEDED BY
SUPERSEDES
CORRECT FOR No.
FIRST INST. No.

ADAPTER
LUNAR SUB-SURFACE LOGGING SONDE
JOB # N33552

TEXACO Inc.
RESEARCH AND TECHNICAL DEPARTMENT
EXPLORATION AND PRODUCTION RESEARCH DIVISION
BELLAIRE, TEXAS

DE. BDS DR. BDS TR.
CK. DATE: 21 JUNE '61
SCALE: DOUBLE SIZE
ASSEMBLY No. RA9449

U9530 96

REORDER NO. 61-475

(A)

MAKE ONE "A" = 3/8 DIA.
MAKE ONE "A" = 7/16 DIA.
MAKE TWO - OMIT "A"

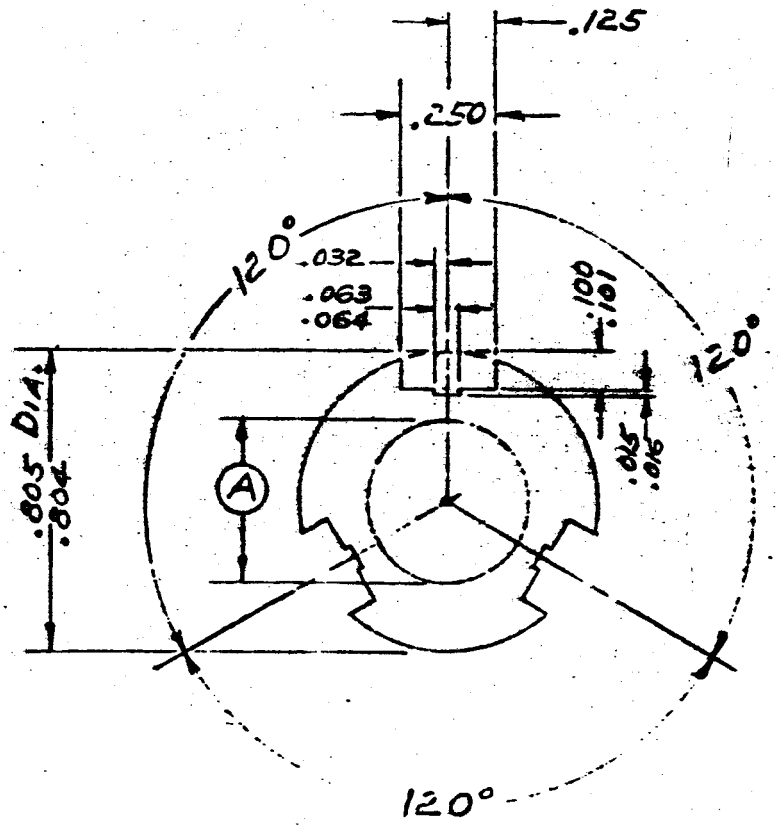

NOTE:
MAKE FROM .005 THICK NICKEL SHEET
POLISH BOTH SIDES TO A MIRROR FINISH

SUPERSEDES (22)

MATERIAL	SIZE	AS SHOWN QUANT.	LET.	REVISIONS	DATE	BY

UNLESS OTHERWISE SPECIFIED ALL DIMENSIONS ARE:
FRACTIONAL ± 1/64".
DECIMAL ± .005"
ANGULAR ± 0° 30'

SUPERSEDED BY
SUPERSEDES
CORRECT FOR NO.
FIRST INST. NO.

RADIATION SHIELD
LUNAR SUB-SURFACE LOGGING SONDE
JOB # N33552

DE. BDS DR. BDS TR.
CK. DATE: 21 JUNE '61
SCALE: DOUBLE SIZE
ASSEMBLY NO. RA 9449

TEXACO inc.
RESEARCH AND TECHNICAL DEPARTMENT
EXPLORATION AND PRODUCTION RESEARCH DIVISION
BELLAIRE, TEXAS

U9531 97

(5)

DRAWING NO. 61-475

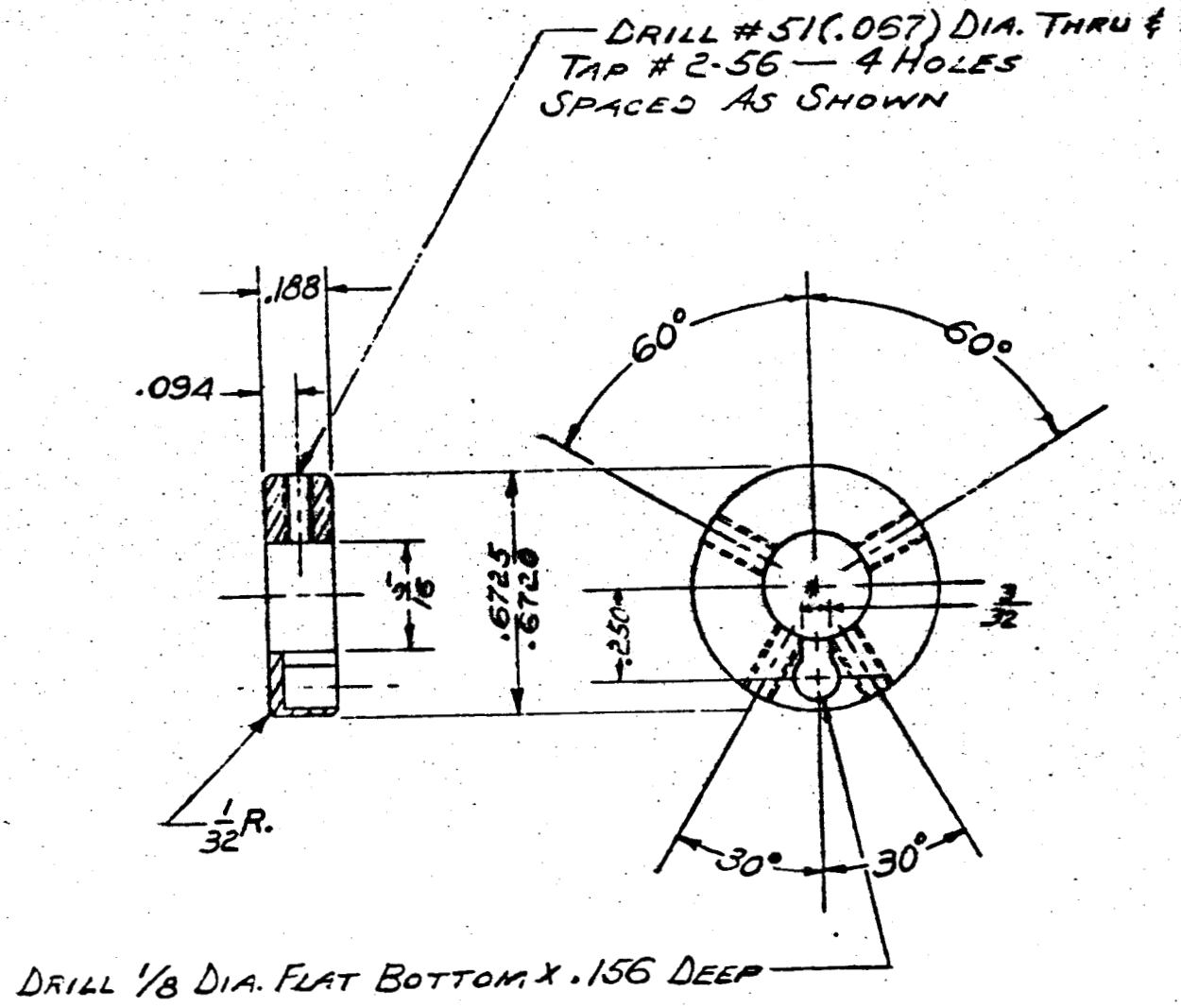

MATERIAL	SIZE	QUANT.	LET.	REVISIONS	DATE	BY
ALUM. 24S	3/4 DIA. × 1/4 THICK	1				

UNLESS OTHERWISE SPECIFIED ALL DIMENSIONS ARE:
FRACTIONAL ± 1/64"
DECIMAL ± .005"
ANGULAR ± 0° 30'

SUPERSEDED BY
SUPERSEDES
CORRECT FOR NO.
FIRST INST. NO.

TEMPERATURE REFERENCE BLOCK
LAMP & SHIELD SECTION.
LUNAR SUB-SURFACE LOGGING SONDE
JOB # N33552

DE. BDS | DR. BDS | TR.
CK. | DATE: 21 JUNE '61
SCALE: DOUBLE SIZE
ASSEMBLY NO. RA9449

TEXACO INC.
RESEARCH AND TECHNICAL DEPARTMENT
EXPLORATION AND PRODUCTION RESEARCH DIVISION
BELLAIRE, TEXAS

U9532 98

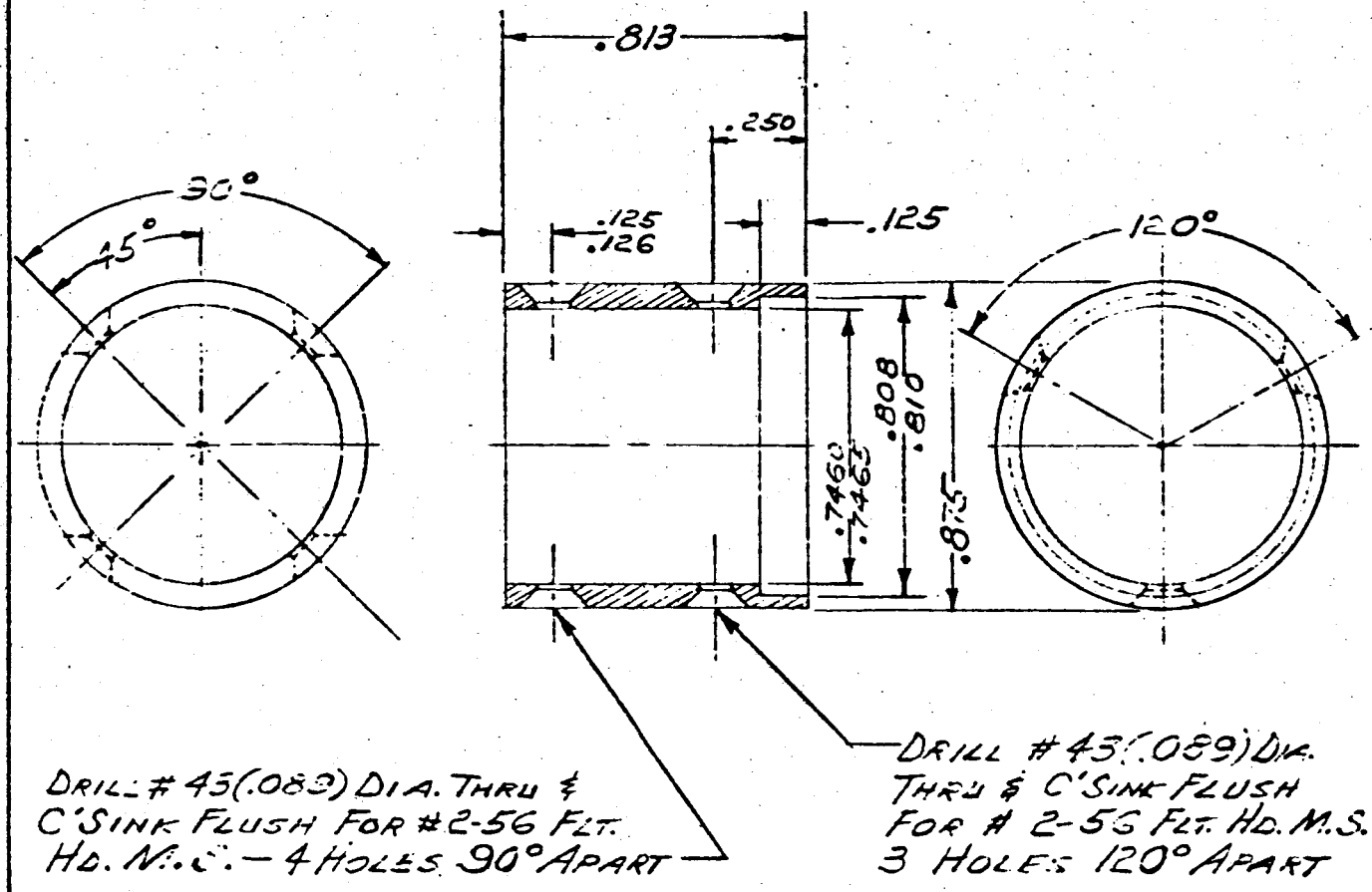

MATERIAL	SIZE	QUANT.	LET.	REVISIONS	DATE	BY
ALUM. 24S	1" DIA. × 1" LONG	1				

UNLESS OTHERWISE SPECIFIED ALL DIMENSIONS ARE:
FRACTIONAL ± 1/64"
DECIMAL ± .005"
ANGULAR ± 0° 30'

SUPERSEDED BY
SUPERSEDES
CORRECT FOR NO.
FIRST INST. NO.

CYLINDER RETAINING SLEEVE
LAMP & SHIELD SECTION
LUNAR SUB-SURFACE LOGGING SONDE
JOB # 133552

TEXACO Inc.
RESEARCH AND TECHNICAL DEPARTMENT
EXPLORATION AND PRODUCTION RESEARCH DIVISION
BELLAIRE, TEXAS

DE. EDS
DR. BDS
TR.
CK.
DATE 22 JUNE '61
SCALE DOUBLE SIZE
ASSEMBLY NO. RA 9449

U9533 99

61-475

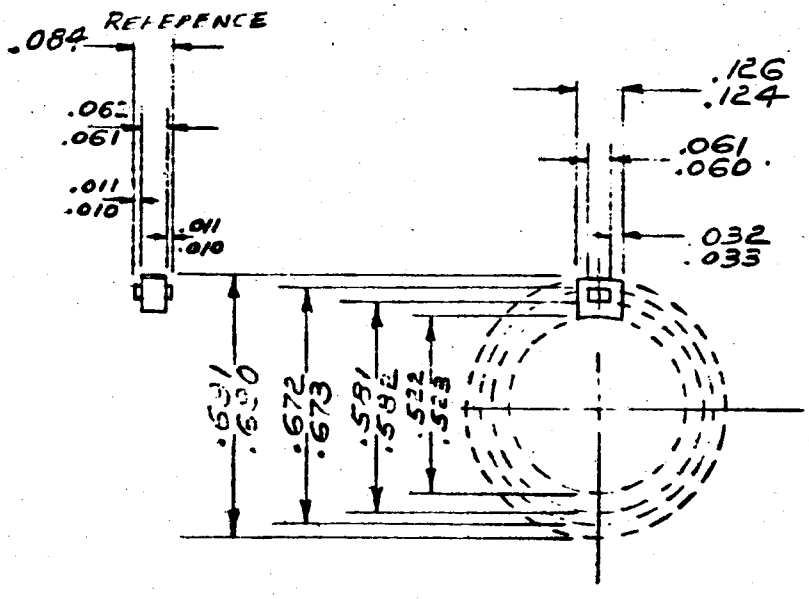

NOTE:
EACH END IDENTICAL

MATERIAL	SIZE	QUANT.	LET.	REVISIONS	DATE	BY
GLASS-EPOXY	AS SHOWN	6				

UNLESS OTHERWISE SPECIFIED ALL DIMENSIONS ARE:
FRACTIONAL ± 1/64"
DECIMAL ± .005"
ANGULAR ± 0° 30'

SUPERSEDED BY
SUPERSEDES
CORRECT FOR NO.
FIRST INST. NO.

SHIELD SPACER
LUNAR SUB-SURFACE LOGGING SONDE
JOB # N3355E

DE. BDS DR. BDS TR.
CK. DATE: 23 JUNE '61
SCALE: DOUBLE SIZE
ASSEMBLY NO. RA 9449

TEXACO Inc.
RESEARCH AND TECHNICAL DEPARTMENT
EXPLORATION AND PRODUCTION RESEARCH DIVISION
BELLAIRE, TEXAS

U9534 100

RE-ORDER No. 61-475

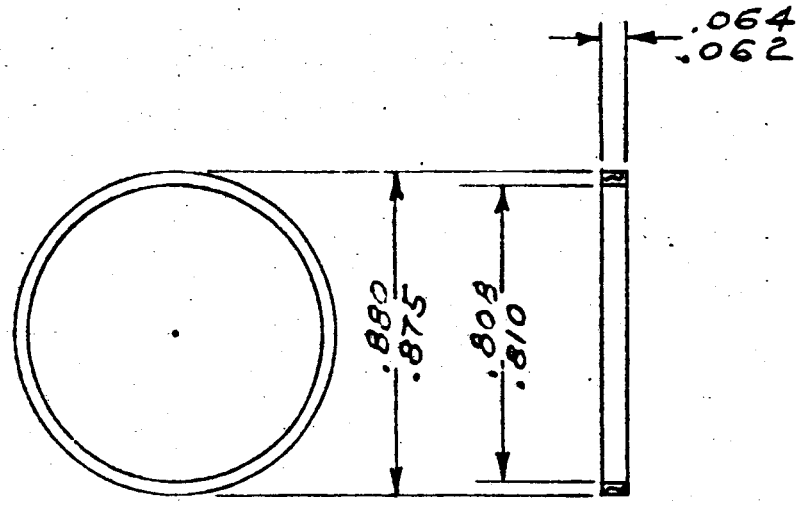

MAT.: 70 DURO NEOPRENE

MATERIAL	SIZE	QUANT.	LET.	REVISIONS	DATE	BY
AS NOTED	AS SHOWN	2				

UNLESS OTHERWISE SPECIFIED ALL DIMENSIONS ARE:
FRACTIONAL ± 1/64"
DECIMAL ± .005"
ANGULAR ± 0° 30'

SUPERSEDED BY
SUPERSEDES
CORRECT FOR No.
FIRST INST. No

CYLINDER CUSHION
LUNAR SUB-SURFACE LOGGING SONDE
JOB # N33552

DE. BDS DR. BDS TR.
CK. DATE: 23 JUNE '61
SCALE: DOUBLE SIZE
ASSEMBLY No. RA 9449

TEXACO Inc.
RESEARCH AND TECHNICAL DEPARTMENT
EXPLORATION AND PRODUCTION RESEARCH DIVISION
BELLAIRE, TEXAS

U9535/101

(56)

ORDER No. 61-475

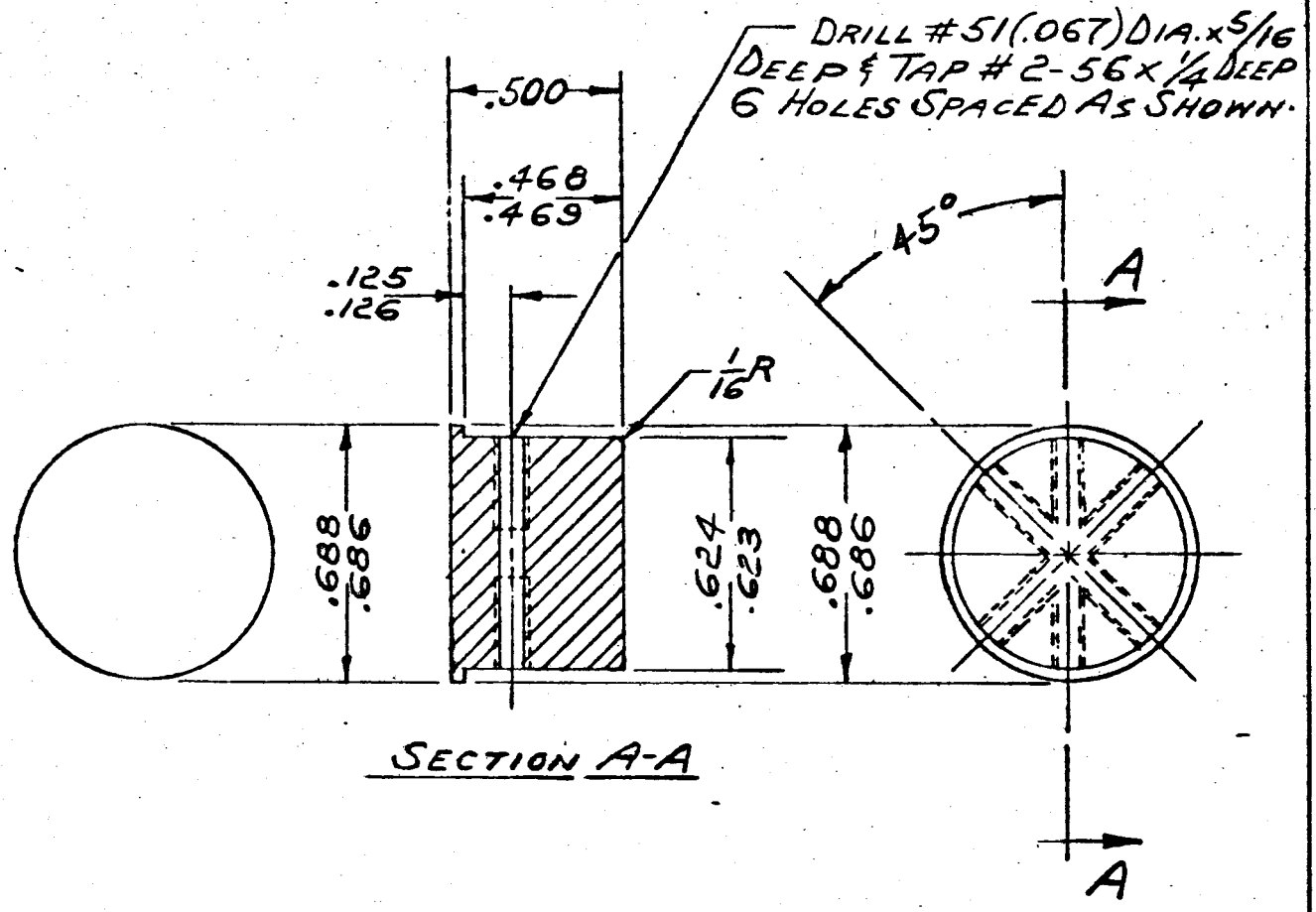

SECTION A-A

MATERIAL	SIZE	QUANT.	LET.	REVISIONS	DATE	BY
MALLORY 1000 METAL	1" DIA. x 3/4 LONG	1				

UNLESS OTHERWISE SPECIFIED ALL DIMENSIONS ARE:
FRACTIONAL ± 1/64"
DECIMAL ± .005"
ANGULAR ± 0° 30'

SUPERSEDED BY
SUPERSEDES
CORRECT FOR No.
FIRST INST. No.

PLUG
FOR COUNTER SECTION
LUNAR SUB-SURFACE LOGGING SONDE
JOB # N 33552

TEXACO Inc.
RESEARCH AND TECHNICAL DEPARTMENT
EXPLORATION AND PRODUCTION RESEARCH DIVISION
BELLAIRE, TEXAS

DE. BDS DR. BDS TR.
CK. DATE: 26 MAY '61
SCALE: DOUBLE SIZE
ASSEMBLY No. RA 9449

U9536/102

(10)

61-475

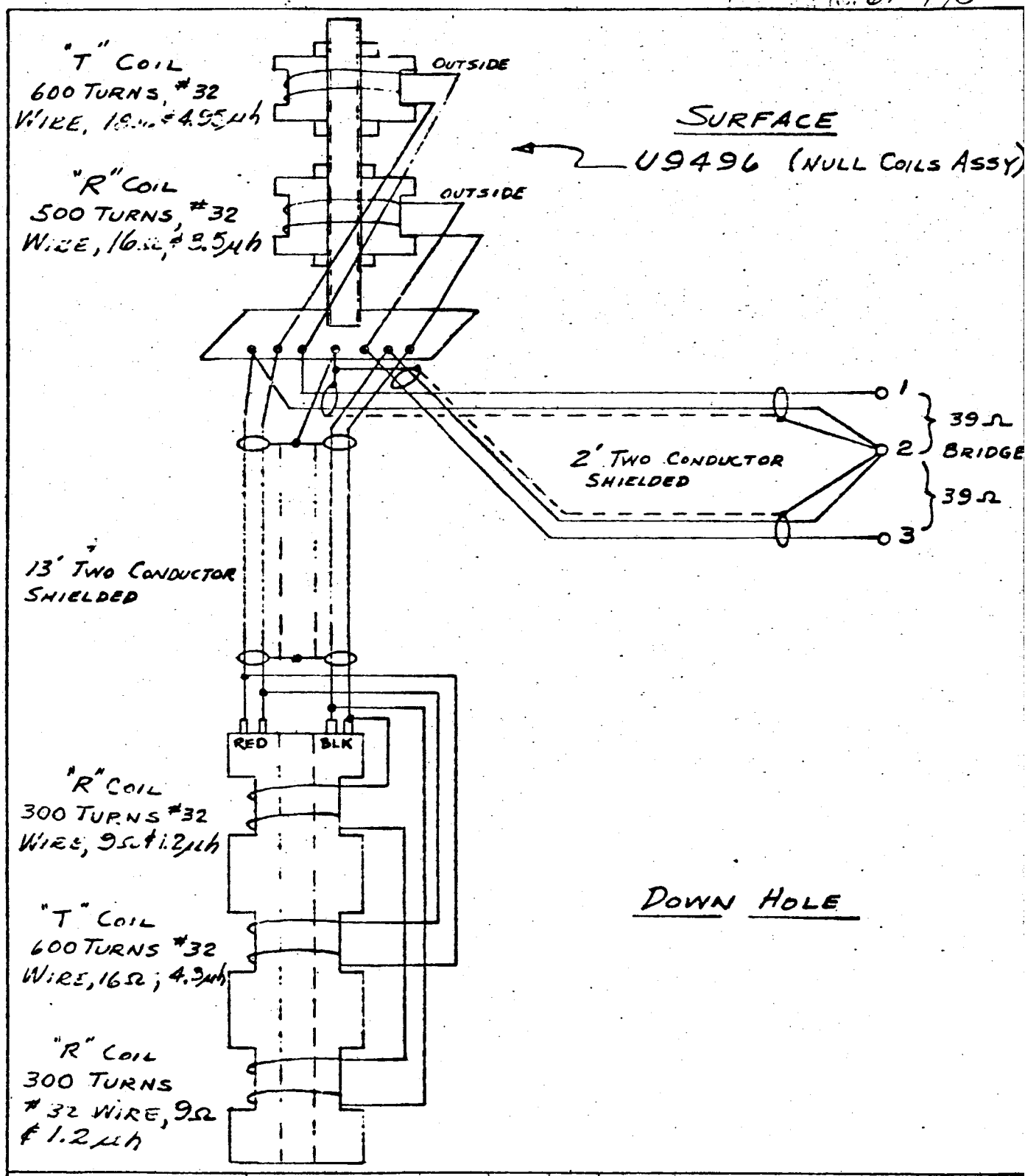

MATERIAL	SIZE	QUANT.	LET.	REVISIONS	DATE	BY

UNLESS OTHERWISE SPECIFIED ALL DIMENSIONS ARE:
FRACTIONAL ± 1/64"
DECIMAL ± .005"
ANGULAR ± 0° 30'

SUPERSEDED BY
SUPERSEDES
CORRECT FOR NO.
FIRST INST NO

DOWN HOLE COIL ASSEMBLY WITH SURFACE COIL ATTACHED MAGNETIC SUSCEPTIBILITY

TEXACO Inc.
RESEARCH AND TECHNICAL DEPARTMENT
EXPLORATION AND PRODUCTION RESEARCH DIVISION
BELLAIRE, TEXAS

DE. G.J.G. DR. TR.
CK. DATE: 7-19-61
SCALE: CIRCUIT
ASSEMBLY NO.
U9573 103