Prepared for the American
Physical Society Meeting
Seattle, August, 1962

[redacted]

LCDE 2a

10 P

[redacted]

E - 1842

PROTON POLARIZATION IN THE REACTIONS

$Ca^{40}(d,p)Ca^{41}$ and $B^{10}(d,p)B^{11}$ at 21 MEV

By E. Boschitz and J. Vincent

Lewis Research Center
National Aeronautics and Space Administration
Cleveland, Ohio

ABSTRACT

10281

The polarization from the $Ca^{40}(d,p)$ and $B^{10}(d,p)$ ground state reactions was studied between 20° and 120° c.m. at a deuteron energy of approximately 21 MeV. This work was done to extend the existing polarization data in deuteron stripping to a higher energy and larger angles as an experimental check to DWBA calculations. $C^{12}(p,p)C^{12}$ at 45° lab. serves as an analyzer. The right-left asymmetry was measured by two counter telescopes that reduced the large neutron background to a negligible amount. P_{carbon} is known from earlier studies at this Research Center and published data.(1) The polarization for B^{10} is found to be positive over the entire angular range. This is in agreement with the data at 7.8, (2) 8.9, (3) and 10 MeV(4) indicating that the deuteron distortion is predominant. The magnitude of the polarization is less than 20% and the oscillatory character of the angular dependence resembles that of the 10 MeV data. The polarization found for Ca^{40} is similar in shape to previous results at 11.4 MeV, (5) however, it is found to be positive at the stripping peak. Since $j_n = l_n + \frac{1}{2}$, again the deuteron interaction is predominant. The magnitude stays in the theoretical limits $|P| \leq \frac{1}{4}$ if no spin orbit interaction is involved.

FACILITY FORM 602

N65-88628
(ACCESSION NUMBER)

(THRU)

10
(PAGES)

(CODE)

TMX-57440
(NASA CR OR TMX OR AD NUMBER)

(CATEGORY)

INTRODUCTION

In deuteron stripping reactions the DWBA theory has been quite successful in describing the shape of the angular distribution and the absolute value of the cross section. A more stringent test of the details of this theory is the fitting of polarization data because the polarization of the outgoing proton depends critically on the distortion of the incoming and/or outgoing waves by the optical potential.

We are reporting here a recent polarization study of the $B^{10}(d,p)B^{11}$ and $Ca^{40}(d,p)Ca^{41}$ ground state reactions which extend the data to higher energies and cover a large angular range.

EXPERIMENTAL

The proton polarization was determined by the double scattering technique. The elastic scattering of the reaction protons from Carbon at 45° lab. was used as an analyzer.

The first slide shows the experimental setup: A deuteron beam from the NASA 150 cm cyclotron, collimated to about 3 mm x 6 mm, was used to bombard targets of 25 mg/cm^2 B^{10} (96% enriched) and 30 mg/cm^2 Ca^{40} (natural mixture). The deuteron energy at the target center is approximately 20.7 MeV in both cases. The average beam current was about 1.5 μA

The entrance collimators of the polarimeter restrict the angular spread of the accepted protons to 2.5°. Within the polarimeter, the protons are scattered to the right or left by a 70 mg/cm^2 carbon target and are detected by CsI(Tl) - E - counters. The pulses from those are fed into the sub-groups of a RIDL 200 channel analyzer.

To reduce the large neutron background from the entrance collimator, the beam stopper and (d,n) reactions in the target, 10 mil thick CsI (Tl) - $\frac{dE}{dx}$ - scintillators were placed in front of the E-crystals and coincidences were required between both detectors. With this arrangement the background could be neglected. Typical spectra in

the pulse height analyzer are seen in the next slide. The main peaks are due to the ground state proton group, the counts at the left of them belong to the first excited state. The peaks were always sufficiently separated to keep the "separation error" smaller than the statistical error.

Instrumental asymmetries are of main concern in polarization experiments. They can be caused by:

a) misalignment of the polarimeter with respect to the reaction target center.
b) asymmetries within the polarimeter and in the electronics.
c) asymmetry due to the finite extension of second target and detecting counters.

To avoid the misalignment asymmetries the mechanical parts of the experimental setup were machined to close tolerances. The remaining asymmetries within the polarimeter and the effect of electronics drift was corrected for by rotating the polarimeter about its symmetry axis about 10 times during each run.

The data originating in the left and right counter were accumulated in the analyzer sub-groups 1 and 2 with the polarimeter in the "up" position, respectively, 3 and 4 when "down". In addition, the polarimeter was moved in the scattering plane from positive to negative stripping angle for a few angles to check for misalignment. The asymmetry due to finite geometry was restricted to about 1% by the small acceptance angle of the polarimeter. The overall instrumental asymmetry was estimated to be less than 2.5% under the worst conditions.

To obtain the polarization in these experiments from the measured "right-left" asymmetry, the polarization of the polarimeter has to be known over the energy range of the reaction protons analyzed. Slide 3 shows the existing data in the elastic proton polarization from carbon at 45° lab. between 13.5 and 19.5 MeV.(1) In order that the polarimeter operates in the region of polarization larger than 50% the protons were degraded by beryllium absorbers to the energy range of 15 to 17.5 MeV.

RESULTS

In slide 4, the present results for the $B^{10}(d,p)$ground state reaction is compared

with data at lower energies. The polarization at 21 MeV is found to be positive, in agreement with the data at 7.8, 8.9 and 10 MeV [2,3,4] indicating — in terms of the semiclassical model — that the deuteron distortion is predominant. The magnitude of the polarization and the oscillatory character of its angular dependence are similar to the 10 MeV data, but the frequency is greater. The negative polarization at 11.4 MeV[5], particularly the rapid change from 10 to 11.4 MeV, is unexpected but might be caused by interference between stripping and compound nucleus formation. The cross section data at 21.5 MeV were taken from Zeidman et al. [6]

The next slide presents the polarization obtained for Ca^{40}. Since no cross section data were available at this energy, we have measured the angular distribution of $Ca^{40}(d,p)Ca^{41}$ over the angular range of our polarization data.

When comparing the polarization at 21 MeV with Takeda's data at 11.4 MeV, a great similarity in the shape of the polarization distribution is evident. For the higher energy, however, the polarization curve is shifted to smaller angles by the same amount as the differential cross section. For 21 MeV incident deuteron energy the polarization is positive at the stripping peak. Since the total angular momentum for the captured neutron is $j_n = l_n + \frac{1}{2}$ the deuteron interaction seems to be predominat again. The magnitude stays in the theoretical limits, $|P| \leq \frac{1}{4}$ for stripping without spin-orbit interaction.

REFERENCES

1) K. W. Brockman, Jr. Phys. Rev. 110 (1958) 163
S. Yamabe et al, J. Phys. Soc. Japan 15 (1960) 2154
E. Boschitz, Nucl. Phys. 30 (1962) 468

2) J. C. Hensel and W. C. Parkinson, Phys. Rev. 110 (1958) 128

3) B. Hird et al. Proc. Phys. Soc. (London) 72, (1958) 489

4) R. W. Bercaw and F. B. Shull, Bul. Am. Phys. Soc. 7, (1962) 269

5) M. Takeda et al, Proc. Int. Conf. Nuc. Struc., Kingston, Ontario, (1960) 400

6) B. Zeidman, et al, Proc. Rutherford Jubilee Conf.,Manchester, (1961) 515

SCHEMATIC DRAWING OF EXPERIMENTAL SETUP

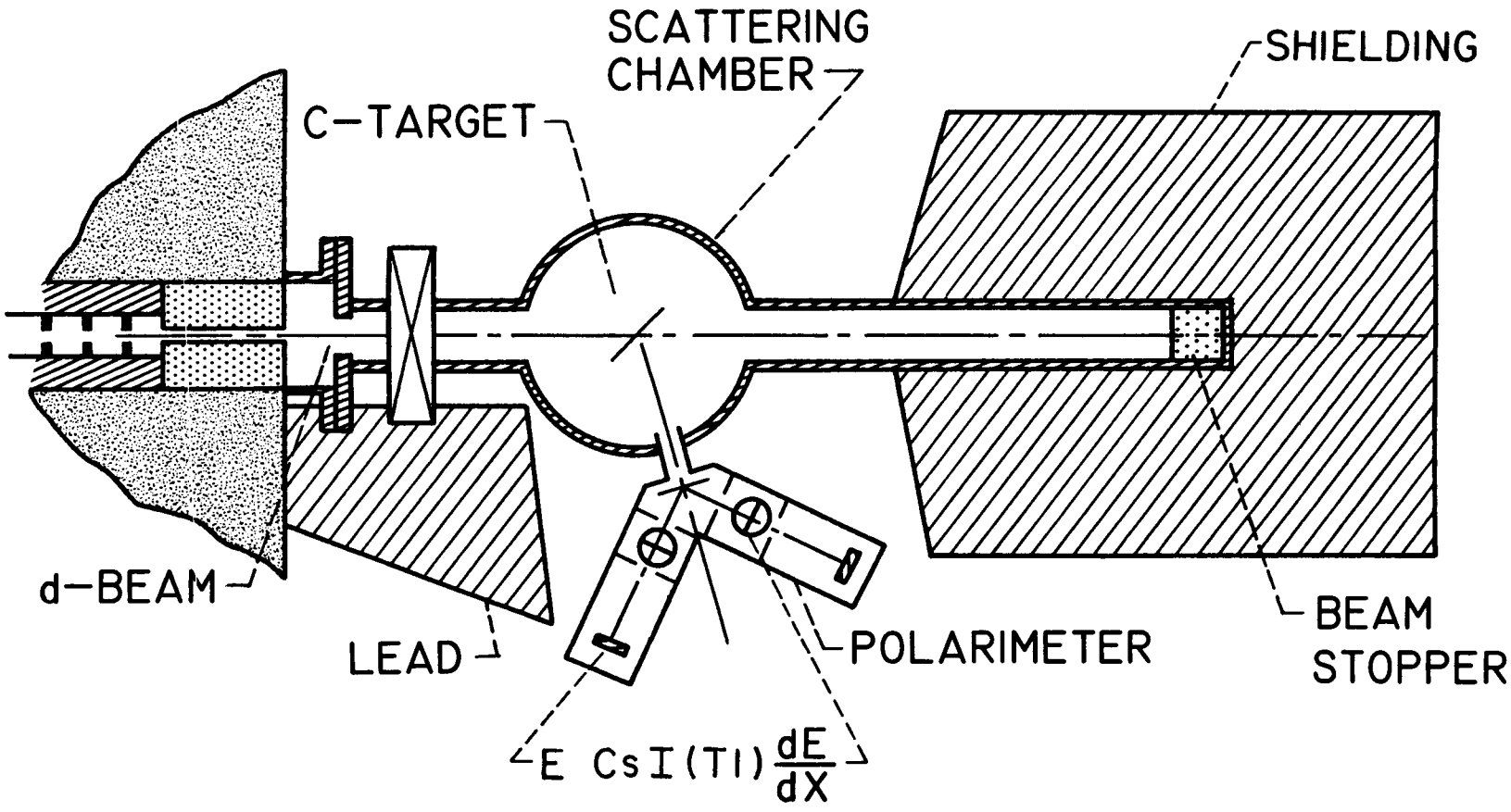

Fig. 1

TYPICAL SPECTRA OF THE POLARIMETER

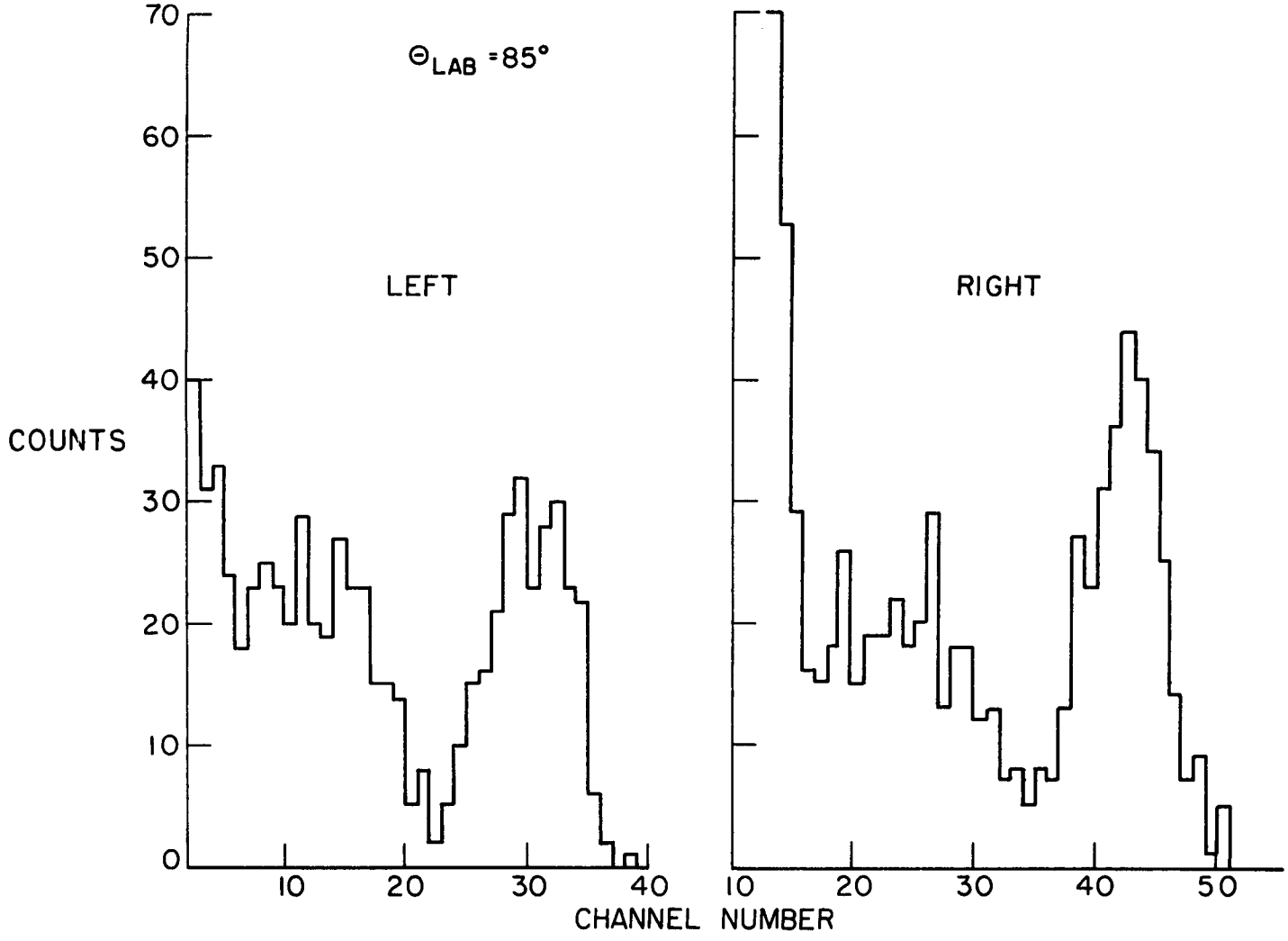

Fig. 2

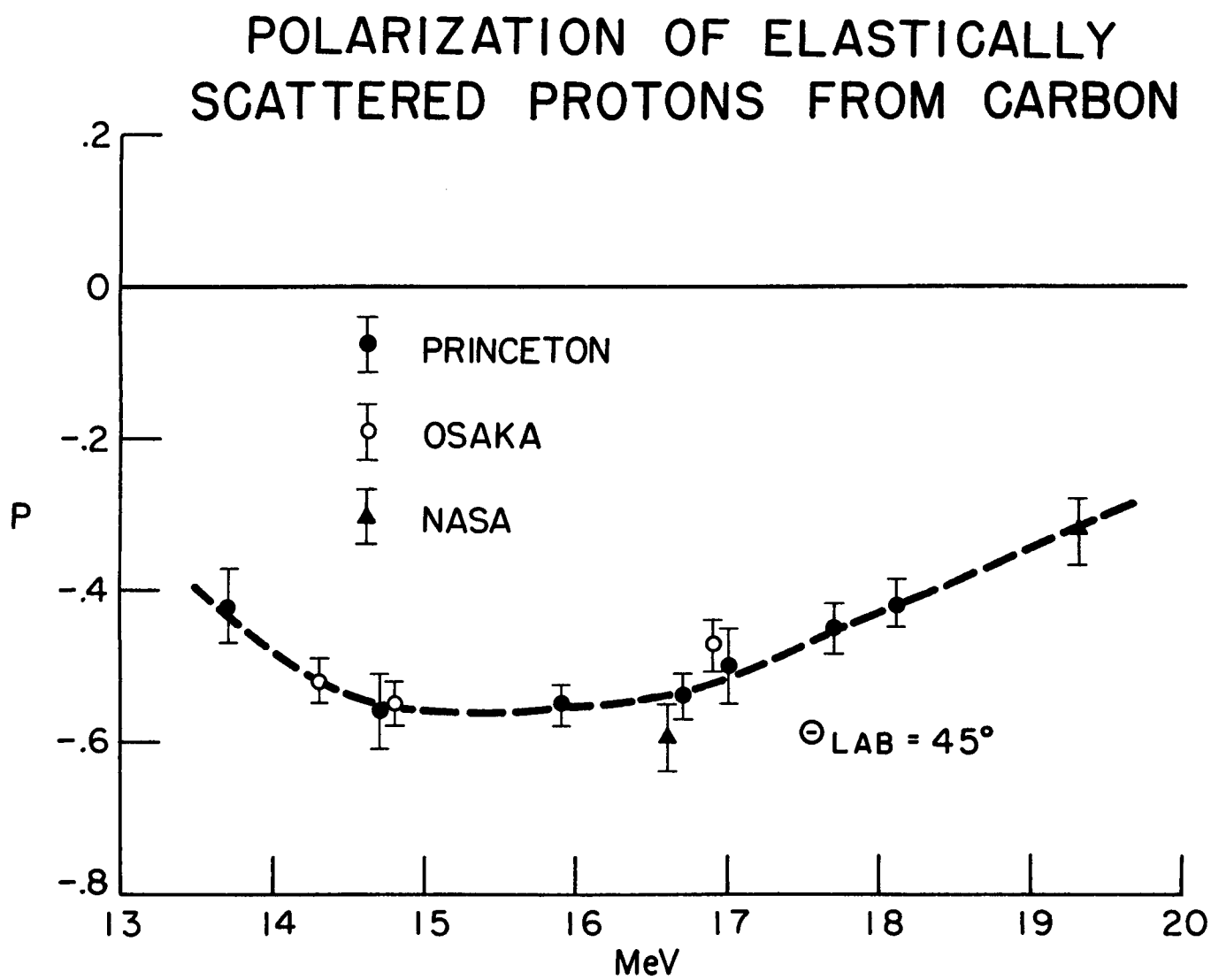
POLARIZATION OF ELASTICALLY SCATTERED PROTONS FROM CARBON
.2
0
-.2
-.4
-.6
-.8
P
PRINCETON
OSAKA
NASA
Θ LAB = 45°
13
14
15
16
17
18
19
20
MeV

Fig. 3

E-1842

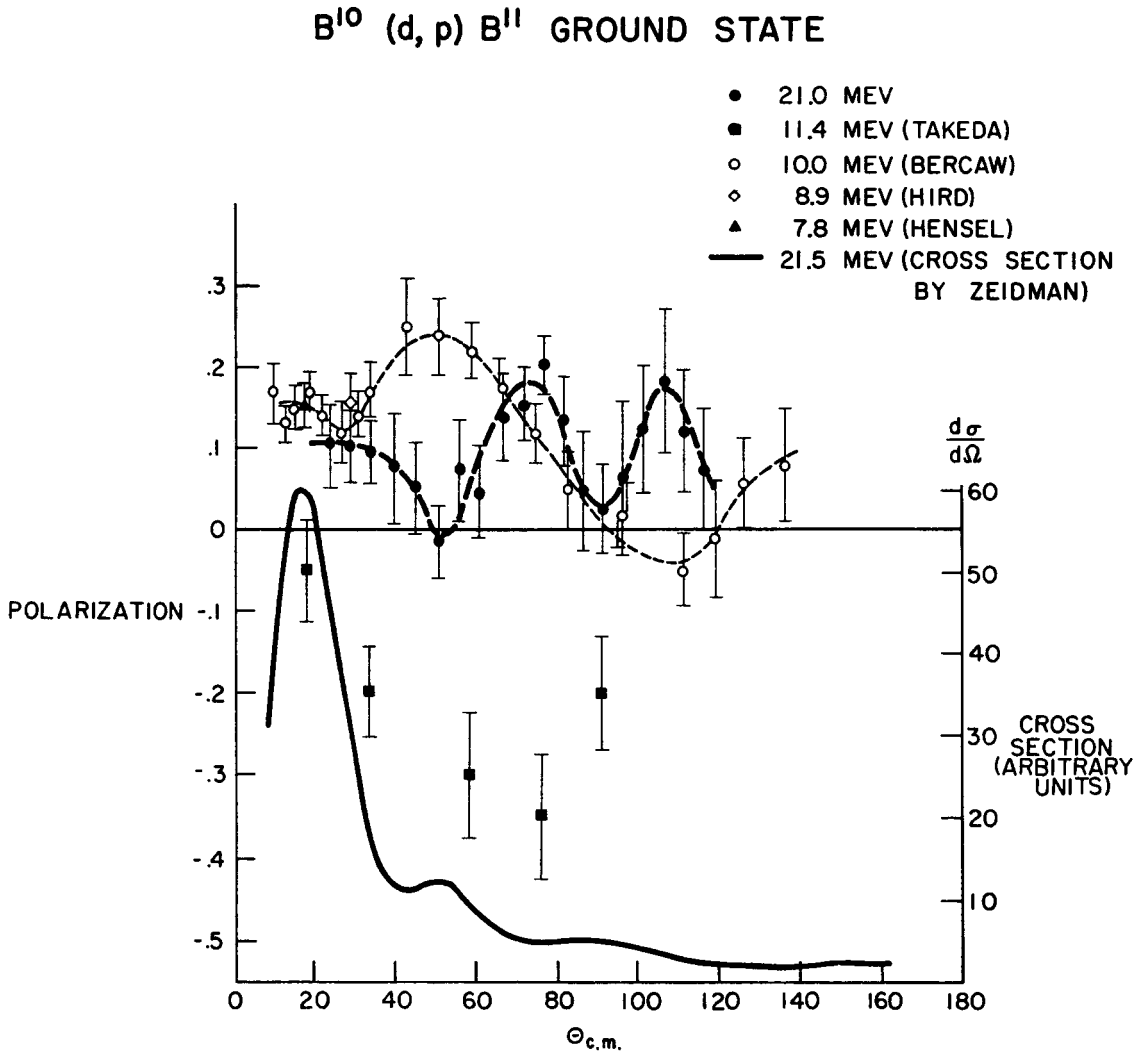
B10 (d, p) B11 GROUND STATE
21.0 MEV
11.4 MEV (TAKEDA)
10.0 MEV (BERCAW)
8.9 MEV (HIRD)
7.8 MEV (HENSEL)
21.5 MEV (CROSS SECTION BY ZEIDMAN)
POLARIZATION
.3
.2
.1
0
-.1
-.2
-.3
-.4
-.5
dσ/dΩ
60
50
40
30
20
10
CROSS SECTION (ARBITRARY UNITS)
0
20
40
60
80
100
120
140
160
180
Θc.m.

Fig. 4

E-1842

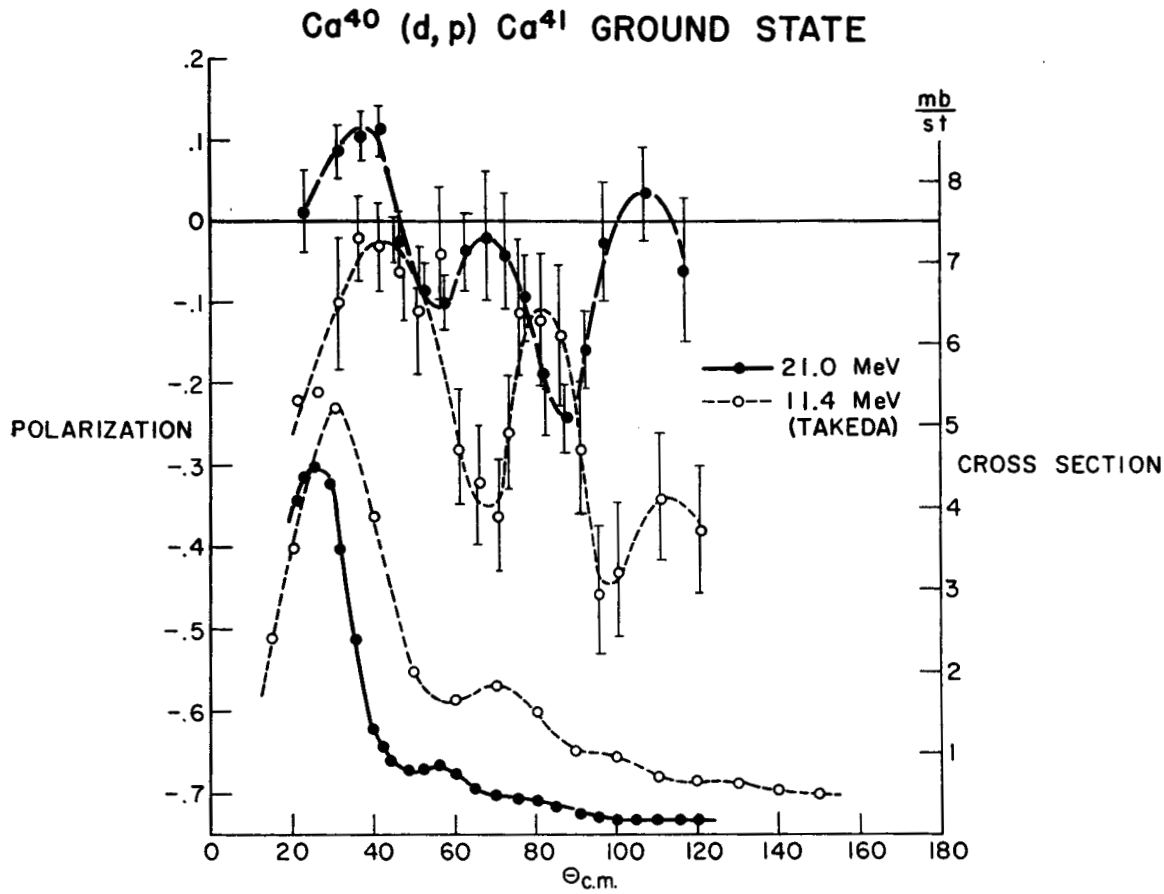
Ca40 (d, p) Ca41 GROUND STATE
POLARIZATION
CROSS SECTION
mb/st
21.0 MeV
11.4 MeV (TAKEDA)
Θc.m.
.2
.1
0
-.1
-.2
-.3
-.4
-.5
-.6
-.7
8
7
6
5
4
3
2
1
0
20
40
60
80
100
120
140
160
180

Fig. 5