15 p.

(NASA TMX - 50294)
N65 #88785
~~X63 15525~~
CODE-2A

EXPERIMENTS AND THEORY FOR HALL CURRENTS

IN CROSSED ELECTRIC AND MAGNETIC FIELDS

ROBERT HESS, PHILIP BROCKMAN, WILLIAM GROSSMANN,
and JOSEPH BURLOCK [1963] 15 p 6 refs

NASA Langley Research Center
Langley Station, Hampton, Va., U.S.A.

Presented at the Sixth International Conference
on Ionization Phenomena in Gases

Paris, France
July 8-13, 1963

~~Available to NASA Offices and NASA Centers Only.~~

EXPERIMENTS AND THEORY FOR HALL CURRENTS

IN CROSSED ELECTRIC AND MAGNETIC FIELDS

ROBERT HESS, PHILIP BROCKMAN, WILLIAM GROSSMANN,
and JOSEPH BURLOCK [1963] 15p 6 refs Presented

NASA Langley Research Center

ABSTRACT

15525

Measurements are presented of the variation of azimuthal Hall currents with increasing radial magnetic field in an axial steady arc discharge at various axial currents for pressures varying from 15 to 40 μ Hg. The increase in Hall currents to a peak with subsequent decrease can be interpreted through an increase of ion slip. The intensity of the high-frequency noise or turbulence varies approximately with Hall current and of the low-frequency noise with ion motion between collisions with neutrals. Hall currents are also measured at pressures around 15 mm Hg in a coaxial electrode configuration.

INTRODUCTION

Recently much effort has been spent in experimental and theoretical studies of Hall accelerators (ref. 1, summary of work by NASA, Industry, and Universities) where azimuthal Hall currents and radial magnetic fields provide the force. An understanding of the basic conduction processes across a magnetic

~~Available to NASA Offices and NASA Centers Only.~~

field involving Hall currents in the presence of ion motion is essential. The major part of this paper is concerned with measurements and interpretation of Hall current variation with magnetic field. The variation of noise or turbulence in the discharge with magnetic field and the extent of its relation with Hall current and ion motion is given. A special effort is made to study the possibilities of conventional loss mechanisms before attributing results to turbulence. In the larger number of tests at pressures from 15 to 40 μ Hg a "Linear Hall accelerator" was used with a radial magnetic field and an axial electric field. A "Coaxial Hall accelerator" with coaxial electrode configuration was used at pressures from 1 to 30 mm Hg where the Hall current is produced by a radial electric field and the axial component of a diverging magnetic field, whose radial component together with Hall current furnishes the acceleration as in an open magnetic mirror.

SYMBOLS

B	magnetic flux density
e	unity charge
E_x	electric field strength
E_x'	$E_x - v_\theta B_r$
j	current density
n	particle density

v	velocity of plasma center of mass
α	mean square density fluctuations
τ	mean free time between particle collisions

Subscripts:

e	electron
i	ion
n	neutral
r,θ,x	cylindrical coordinates

APPARATUS AND MEASUREMENTS

Linear Hall Accelerator

A schematic of the apparatus is given in fig. 1. The discharge is formed between an aluminum cathode and a copper anode; an inductively heated tungsten ring cathode has been used in a few experiments. The electrodes are 7.3 cm in diameter and 2.54 cm long and are separated by a 22.86-cm long glass (vycor, quartz). The radial magnetic field component is produced by a solenoid, between cathode and anode, and a center iron bar and reverses on either side of the solenoid. This results in a reversal of Hall current and plasma rotation which depend on the direction of B_r, but the axial forces remain in the same direction, being dependent on B_r^2. The argon enters before the anode and is pumped away behind the cathode. The present discharge operated without preionizer and was started with a Tesla coil,

but a preionizer has also been tested. The Hall current was measured by switching the discharge off and integrating the current induced in a 300-turn coil with a ballistic galvanometer, whose deflection is proportional to the Hall current. Care was taken to avoid side effects. Two 80-turn coils were used to simulate the Hall current for calibrations, which were repeated at several values of B_r to eliminate possible effects due to saturation of the iron bar. At each pressure (15, 30, and 40 μ Hg) the discharge was operated at several values of B_r and at several axial currents. The results were cross plotted to give j_θ and E_x vs. B_r for various j_x. The complete results are in reference 2 but only the Hall current variation at 30 μ Hg is given here (figs. 2 and 3).

The noise intensity generated in the crossed field discharge was measured and its spectrum examined; externally, by using electrostatic coupling through the glass envelope of the discharge and internally, by coupling to a probe inserted in the plasma. The external measurements emphasized the high-frequency noise band above about 50 kc. The initial series of external and internal measurements showed a variation of the high-frequency noise intensity with increasing magnetic field at constant axial current, which approximately follows the increase and decrease of the Hall current. The intensity of the low-frequency noise band, from below 50 kc to 10 kc increased with magnetic field. The

measured internal voltage gradients vary approximately with the noise intensity. The internal probe was decoupled by a capacitor from the instrumentation and operated at floating potential; the capacitor did not affect the frequency response for the range of interest (1 to 200 kc). Without the magnetic field, the noise intensity was small, but experiments with thermionically emitting cathodes are in progress to avoid this noise.

Coaxial Hall Accelerator

The radial electric field of the coaxial Hall accelerator is produced by a tungsten cathode surrounded by an annular copper ring anode and the diverging magnetic field by a solenoid with means for field shaping. The configuration is shown in reference 1. In the annulus between the coaxial electrodes the flow attains sonic velocity between the coaxial electrodes and expands to supersonic velocities in an attached boron nitride nozzle. The currents bulge into the supersonic region where acceleration occurs. The Hall current search coil is imbedded in the nonconducting nozzle.

The Hall current signal is pressure dependent approximately in agreement with theory. The order of magnitude of the ratio of Hall current and electrode current varies from about 1 to 10 for the pressure range from 1 to 30 mm Hg, electrode currents from

100 to 350 amperes, and magnetic fields from 3,000 to 10,000 gauss. The test gases were argon and helium. Oscillations appear occasionally in the discharge, which in view of the much higher pressures and the coaxial geometry are of different origin from those occurring in the low-pressure experiments. As indicated from high-speed movies and Kerr cell photographs, the oscillations are related to the existence of arc spokes which, however, vanish for sufficiently large values of $\omega_e \tau_e$ and when uniformity of cathode heating is attained. An apparatus has been built to use 4 times higher currents and magnetic fields.

INTERPRETATION OF RESULTS FOR LINEAR HALL ACCELERATOR

(a) Ion Slip, Joule Heating, and Ionization

The most interesting result found is the increase and decrease of Hall current with increasing magnetic field. A theoretical interpretation is proposed in reference 2 to explain the main effects of these phenomena. The analysis is based on including ion slip in the equations for the Hall current and assuming that for constant axial current both τ_e and τ_{in} are constants and neglecting v_x. This theory does not depend on turbulent effects which will be discussed in section (b). The resulting equation for Hall current derived from the generalized Ohm's law (ref. 3) is:

$$-j_\theta = \frac{\omega_e\tau_e}{1 + 2\omega_e\tau_e\omega_i\tau_{in}} j_x \tag{1}$$

and the coefficient of j_x has a maximum at

$$2\omega_e\tau_e\omega_i\tau_{in} = 1 \tag{2}$$

when $\omega_e\tau_e$ and $\omega_i\tau_{in}$ are functions of B_r only. Thus, for constant j_x, j_θ will have a maximum and

$$-j_{\theta max} = \frac{\omega_e\tau_e}{2} j_x \tag{3}$$

Eqs. (3) and (2) were used to calculate $\omega_e\tau_e$ and $\omega_i\tau_{in}$ at $j_{\theta max}$.

These values were used to calculate j_θ as a function of B_r. In fig. 3 experimental and theoretical curves of j_θ vs. B_r are given, where for $j_{\theta max}$; at $j_x = 3{,}930$ amp/m^2, $B_r = 0.015$ web/m^2, $\omega_e\tau_e/B_r = 668$, $\omega_i\tau_{in}/B_r = 3.32$; at $j_x = 5{,}240$, $B_r = 0.015$ web/m^2, $\omega_e\tau_e/B_r = 772$, $\omega_i\tau_{in}/B_r = 2.9$; at $j_x = 9{,}170$ amp/m^2, $B_r = 0.0125$, $\omega_e\tau_e/B_r = 1{,}256$, $\omega_i\tau_{in}/B_r = 2.55$. The values agree reasonably well with theory.

The method of calculating the values of j_θ forces the curves to match at the maximum point but a close fit for the shape of the curves is shown. For this simple interpretation of the reduction in j_θ the quantities τ_e and τ_{in} were held

constant and the center of mass velocities v_x and v_θ, which also could cause a reduction in j_θ, were neglected. Since for the partially ionized plasmas v_x and v_θ are weighted in favor of the neutrals and also preliminary observations show that they are not large here, their neglect seems justified. A reduction in j_θ with B_r could also be caused by a reduction in τ_e, which could be due to an increase in collision cross section, say, due to ionization; to make this effect more important than that of ion slip, τ_e would have to decrease faster than B_r, which is unlikely here. Attempts to interpret complete, or partial, linear variation of E' with B_r in Hall accelerators through energy input to ionization (variation of τ_e and n_e) have been made at the Lewis and Langley Research Centers of NASA and at AVCO Everett at low pressures of a few μ Hg (Lewis) and at higher pressures around 20 mm Hg (Langley and AVCO).

(b) Turbulent Conduction

The experimental and theoretical studies of noise or turbulence in Hall accelerators (refs. 3, 4, and 1) as well as the related theories for conduction across magnetic fields (refs. 5 and 6) are still in the preliminary stage. In reference 5 the ion motion is neglected and in reference 6 it is included in a restricted form with the conclusion that the ions damp the turbulence. In the literature the effect of turbulence is considered

for the conduction current but not for the Hall current. To obtain a simple picture it is assumed that the loss term for j_θ is replaced by turbulent effects in analogy with the conduction current in reference 5.

$$j_x = \alpha n_e e \frac{E_x'}{B} + n_e e v_x \tag{4}$$

with the Hall current

$$-j_\theta = n_e e \frac{E_x'}{B} - \alpha j_x \tag{5}$$

in analogy to another form of eq. (1) given in reference 2. Here, α includes the effect of ion motion, somewhat in violation of the theory in reference 6 where ions damp the turbulence. In our experiments, however, the amplitude of the low-frequency noise related to the ions is large and axial motion of the ions occurs; thus the theory in reference 6, using the effects on the ions in restricted form, need not apply. Caution is necessary, when relating the noise amplitude, the mean square electric field fluctuations, to α, the mean square density fluctuations (ref. 5).

The Hall current which about follows the high-frequency noise intensity appears to be the source of instabilities which transfer progressively a larger share of energy to ion oscillations. The increase in low-frequency noise intensity with magnetic field

appears related to the increased freedom in ion motion before colliding with a neutral, i.e., $\omega_i \tau_{in}$. Initial test shows an intermediate dip in slope of the curve showing the variation of noise intensity with B_r at about the Hall current peak, a behavior similar to transition from laminar to turbulent flow. Much further experimental and theoretical study is necessary to decide about this result and, more broadly, about whether the ion slip or a transition to turbulent loss due to increased ion oscillations causes the decrease in Hall current, both mechanisms having similar origin, the increase of freedom in ion motion. The great variety of crossed field instabilities studied in France, Russia, and the United States cannot be discussed here. From experiments for the Kadomtsev instability by Gierke and Wöhler at München and Garching, hopes exist to delay the crossed field instability by increased ionization and reduced axial electric fields; experiments with preionizers are in progress, at the Magnetoplasmadynamics Branch of Langley Research Center where this research was performed.

REFERENCES

1. Hess, R. V.: Fundamentals of Plasma Interaction With Electric and Magnetic Fields. NASA - University Conference, vol. 2, paper 59, Nov. 1962.
2. Brockman, P.: Some Considerations of an Axial Arc in a Radial Magnetic Field. M.A. Thesis. College of William and Mary in Virginia, May 1963.
3. Hess, R. V., Burlock, J., Sevier, J., and Brockman, P.: Theory and Experiments for the Role of Space Charge in Plasma Acceleration. Symposium Polytechnic Inst. of Brooklyn, April 1961, published Brooklyn Polytechnic Press, 1962.
4. Janes, S., Dotson, J., and Wilson, T.: Electrostatic Acceleration of Neutral Plasmas. AVCO-Everett Res. Lab. AMP 88, Sept. 1962.
5. Yoshikawa, S., and Rose, D. J.: Anomalous Diffusion of a Plasma Across a Magnetic Field. Physics of Fluids, Vol. 5, No. 3, March 1962.
6. Kadomtsev, B.: Turbulent Plasma in a Strong Magnetic Field. Journal of Nuclear Energy, Part C., Vol. 5, 1963.

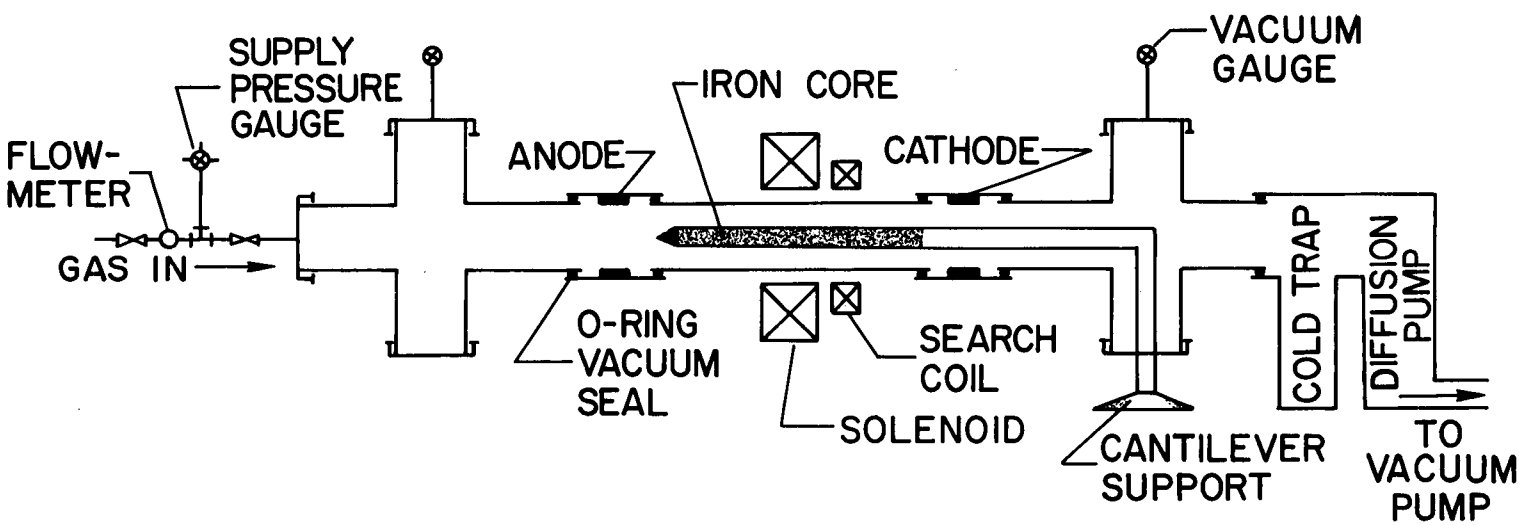

NASA

Figure 1.- Schematic of apparatus.

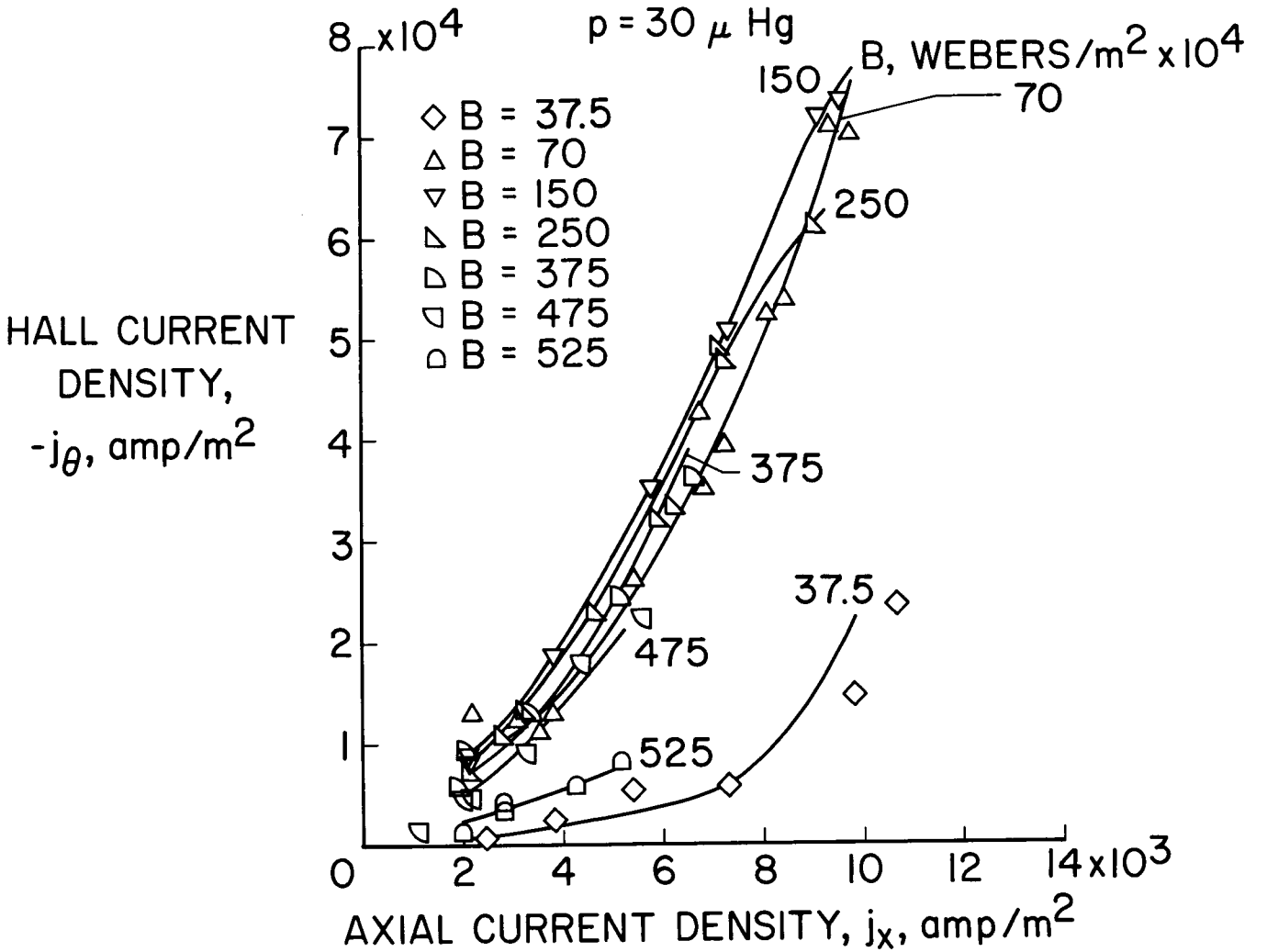

NASA

Figure 2.- Hall current density versus axial current density for various magnetic flux densities.

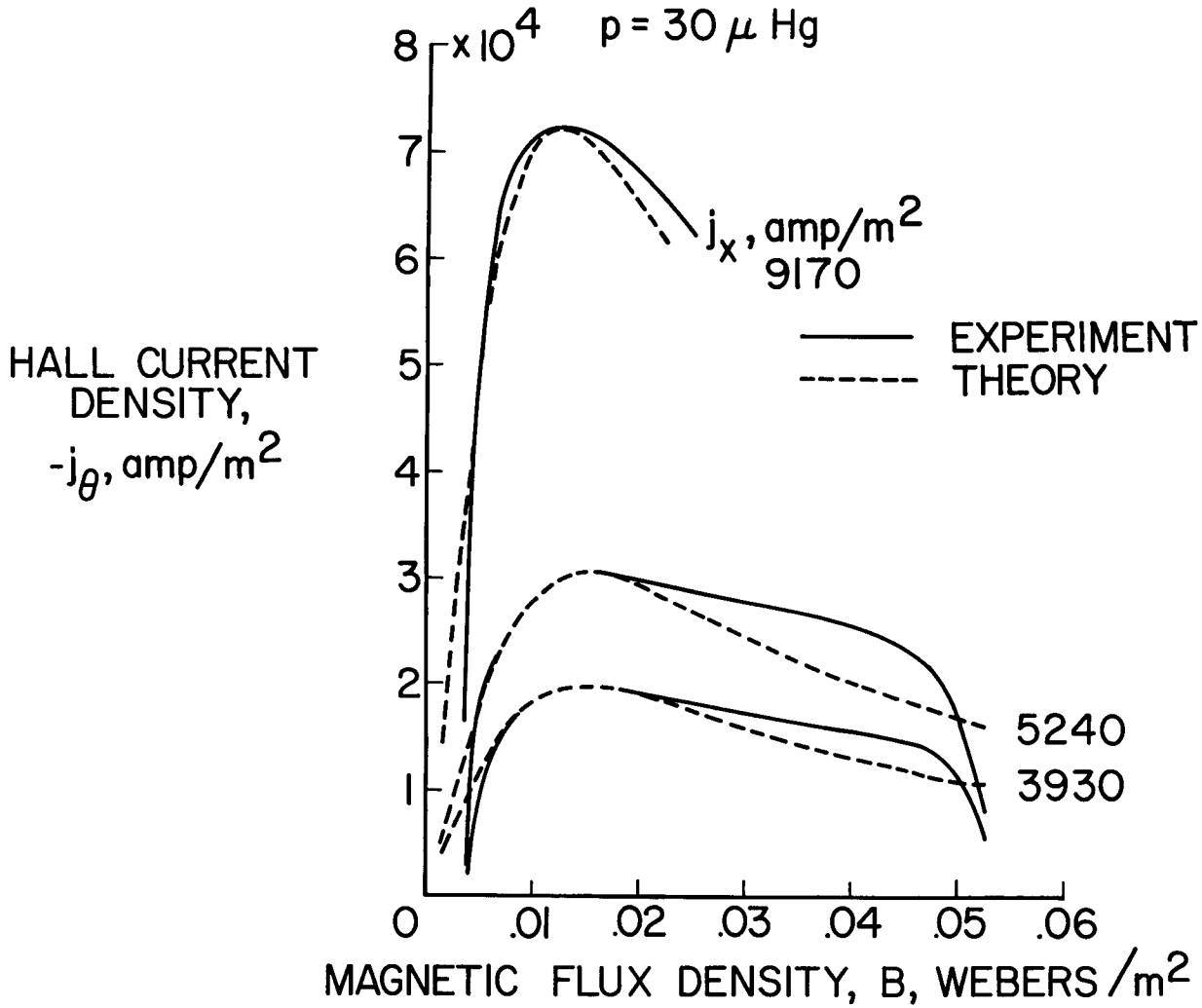

NASA

Figure 3.- Comparison of theory and experiment, Hall current density versus magnetic flux density.