13 p.

N65-88804
~~X63 15599~~
CODE-2A
(NASA TMX-50533)

FIELD EFFECT TRANSISTOR

ELECTROMETER AMPLIFIER

by

Robert Muñoz

NASA Ames Research Center

Moffett Field, California

~~April~~ 11, 1963 13 p 6 refs Submitted for Publication

BEST AVAILABLE COPY

~~Available to NASA Offices and NASA Centers Only.~~

The field-effect transistor makes an almost ideal device for measuring very small currents. Many applications arise in plasma physics radiometry and other fields where an accurate measure of currents approaching the theoretical noise limit is necessary. The field-effect transistor provides an excellent solution to many of the problems posed by these applications, especially where low power consumption and extremely harsh environmental conditions prevail.

Heretofore, the vacuum-tube electrometer has been used to advantage even though it is encumbered with several very objectionable limitations: power efficiency is poor due to the requirement that a filament be maintained at a high temperature. This heated filament causes a relatively high thermal noise environment in the immediate vicinity of the sensitive current measurements. This precludes the possibility of cooling to achieve optimized performance. Filament and grid structures in the electrometer are sensitive to shock and vibration and are unsuitable for rugged duty applications. The field-effect transistor is a definite improvement in each of these areas allowing low-power operation without a noise-producing heat source in a tiny and rugged mechanical structure.

One scheme for measuring very small currents by employing a negative feedback amplifier technique is illustrated in Figure 1. Field-effect transistors, now available in production quantities, when used in conjunction with this technique allow the measurement of currents as low as 10^{-13} amperes with a 1-cycle bandwidth at

Available to NASA Offices and NASA Centers Only.

room temperature. The following discussion illustrates the capabilities of this scheme to produce very low-noise operation where a high-impedance device is used as an input stage. The development of a field-effect-transistor electrometer amplifier follows with measurements of noise which approach the theoretical limits of the feedback-amplifier scheme.

In the ideal case, where leakage resistance is infinite, the only limitation to the feedback amplifier scheme of current measurement is the thermal noise produced in the feedback resistor R_f. An analysis of this situation shows that the signal-to-noise ratio is proportional to the square root of the feedback resistance. Figure 2 includes the thermal-noise voltage generator v_n in series with the feedback resistor R_f. A nodal equation written for currents at the input yields the following:

$$i_{in} = i_f \tag{1}$$

substituting for i_f the branch volt amp relationship of R_f.

$$i_{in} = \frac{e_{in} - v_n - e_o}{R_f} \tag{2}$$

Writing e_{in} in terms of e_o and solving for e_o yields:

$$e_o = \frac{-i_{in} R_f - v_n}{(1 + 1/A)} \tag{3}$$

This basic relation demonstrates the fact that, if noise is neglible, the output voltage is a direct measure of the input current and is related by the transresistance R_f. Therefore, if it is possible to

make R_f very large, we have a technique for measuring small currents. But what happens to the noise when we make R_f large? Two things happen, noise voltage, v_n, increases, but the noise current which interests us most decreases as can be seen if we write the signal-to-noise voltage ratio using Equation (3) as a start. Here we define signal-to-noise voltage ratio as the output RMS voltage due to current input compared to output voltage due to noise input since this ratio is more meaningful than signal-to-noise power ratio in a current measuring application.

$$S/N = \frac{i_n \; R_f}{v_n} \tag{4}$$

Now, substituting for the RMS thermal noise voltage, v_n, we have:

$$v_n = (4KTBR_f)^{1/2} \tag{5}$$

where

K = the Boltzman Constant, 1.38×10^{-23} Joules/deg K

T = absolute temperature in deg K

B = bandwidth in cps

and

$$S/N = i_{in}\left(\frac{R_f}{4KTB} \right)^{1/2} \tag{6}$$

The performance of this feedback scheme improves with increasing feedback resistance as can be seen in Equation (6). If temperature and bandwidth are fixed, the signal-to-noise ratio is directly proportional to the square root of the feedback resistance. However, leakage resistance forms a practical limit to the best signal-to-noise ratio.

Since even the field-effect transistor has some leakage resistance, the effect of this leakage must be considered. Figure 3 shows the equivalent circuit of the feedback amplifier including the thermal-noise voltage in the leakage resistance and neglecting the feedback-resistor noise. If input current is zero, the noise voltage input appearing at the output can, by a process similar to the one described above, be shown to be:

$$e_{o_1} = v_{n_1} \frac{R_f}{R_1} \left(\frac{1}{1 + 1/A}\right) \qquad (7)$$

From this it can be seen that the output noise varies inversely as the leakage resistance.

Since in a linear system the principle of superposition holds, we may compute the total noise contributed by each of the processes discussed above. Superposition, when dealing with noise, allows us to add noise power, but since we are really interested in output voltage and not output power, we must first convert voltages to power, take the sum, and then convert back to voltage. This may be done in this case or for any similar noise problem by taking the square root of the sum of the squares of the voltages in question. Equation (8) shows the total noise contributed by the two thermal-noise-resistance sources R_f and R_1.

$$e_{o_{\text{total noise}}} = \frac{1}{(1 + 1/A)} \left(v_n^2 + v_{n_1}^2 \frac{R_f^2}{R_1^2}\right)^{1/2} \qquad (8)$$

Substituting for the thermal noise values computed in Equation (5), we have:

$$e_{o_{\text{total noise}}} = \frac{1}{(1 + 1/A)} \left[4KTBR_f \left(1 + \frac{R_f}{R_1}\right) \right]^{1/2} \qquad (9)$$

And the signal to noise ratio computed for this total noise is:

$$S/N = i_{in} \left[\frac{R_f}{(4KTB) \left(1 + \frac{R_f}{R_1}\right)} \right]^{1/2} \qquad (10)$$

This is a very important result since it describes how leakage resistance R_1 deteriorates the performance of the current measuring scheme. Since the field-effect transistor has an inherently very high leakage resistance, good signal-to-noise ratios can be achieved at very low current levels.

Thermal noise originating in the drain circuit of the field-effect transistor has been neglected in this analysis because the current gain of the FET is large and when referred to input current noise, the thermal noise of the input predominates. Recombination noise is negligible in the drain circuit because the control mechanism is the flow of majority carriers as shown by Van der Ziel.[1]

Figure 4 shows a circuit which optimizes the noise performance of the field-effect transistor in several ways. First, the circuit allows maximum bandwidth and, second, bias resistors are eliminated by supplying gate bias voltage through the feedback resistance R_f.

1. Van der Ziel - Thermal Noise in Field Effect Transistors, Proc IRE Vol 50, pages 1808 - 1812, August 1962

All transistors suffer from 1/f noise and the field-effect transistor is no exception; however, above 1 KC, this type of noise is not a problem.[1] For this reason, the circuit shown in Figure 4 has been developed as an AC amplifier and is intended to be used in conjunction with an external filter which limits bandwidth so as to achieve optimum noise performance. Low power consumption, low-noise operation, and simplicity are the important design objectives in this case. A close-coupled feedback pair T_1 and T_2 is used in the input stage to allow in-phase operation and to produce good cancellation of source-to-gate capacitance in the field-effect transistor. The bipolar transistor T_2 improves the gain of the input source-follower circuit by feedback from a value of approximately +0.6 to a very nearly +1. The equivalent capacitance between gate and source is thereby reduced appreciably. The input time constant is now limited only by the gate-to-drain capacitance and maximum bandwidth is achieved. If resistors were used to establish DC bias in the field-effect transistors, these resistors would produce noise currents, limiting the performance of the circuit. This difficulty is eliminated by applying DC bias through the feedback resistance.

Power consumption has been held to 4.5 milliwatts. Figure 5 shows the frequency response of the circuit when used as a voltage amplifier with a gain of 10 and an input resistance of 10 megohms (R_f = 100M). Figure 6 shows the noise current density plotted as a

1. Transistor Circuit Design by Texas Instruments Staff, McGraw-Hill 1963. A curve of spot noise is shown on page 513.

2. Transistor Electronics by Dewitt and Rossoff, McGraw-Hill 1957, page 342.

function of frequency demonstrating that for units presently available, currents as low as 10^{-13} amps may be measured at room temperature with a 1-cycle bandwidth. When higher-purity materials and field-effect transistors with higher leakage resistances become available, even greater sensitivity will be achieved.

BIBLIOGRAPHY

Design with Field Effect Transistors Low and Analyzing High Impedance F. E. T. Amplifiers, Electronic Equipment Engineering, March 1963, pp 68 - 73.

Field Effect Transistors Theory and Application. Amelco application note, June 1962.

Unipolar Field Effect Transistor Characteristics and Applications, Texas Instruments technical information, 1961.

Field Effect Transistors as Low Noise Amplifiers, P. O. Lauritzen and O. Leistiko Jr., Fairchild technical paper No 19, 1961.

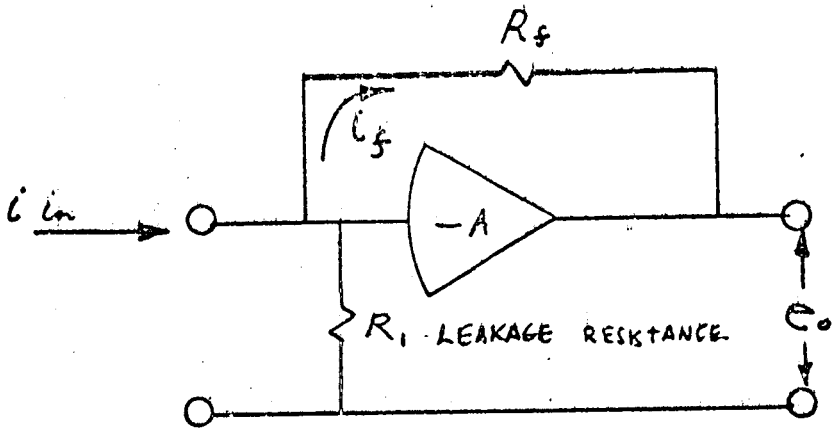

Figure 1.- Feedback Amplifier Scheme for Measuring Small Currents.

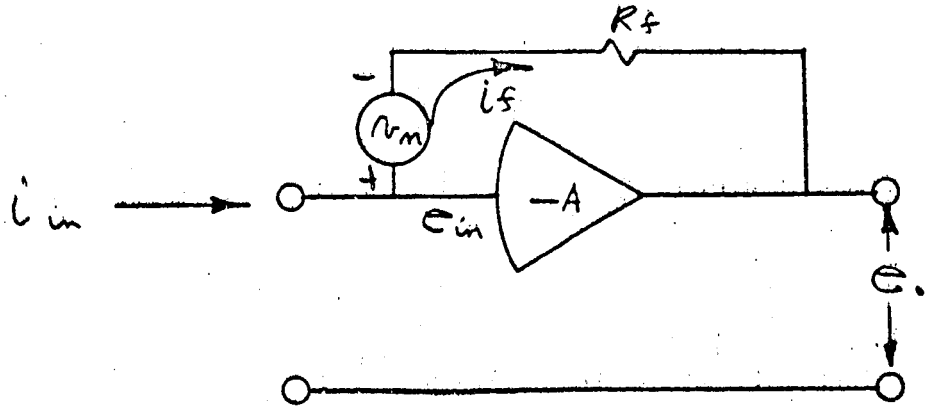

Figure 2.- Ideal Electrometer Amplifier.

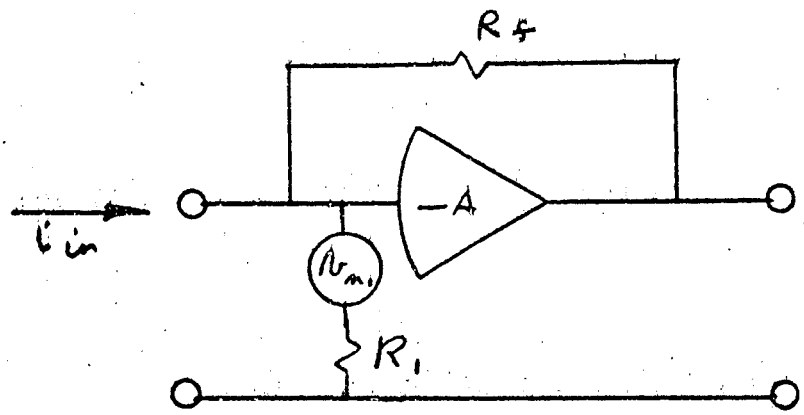

Figure 3.- Electrometer Amplifier Considering Noise in the Input Leakage Resistance.

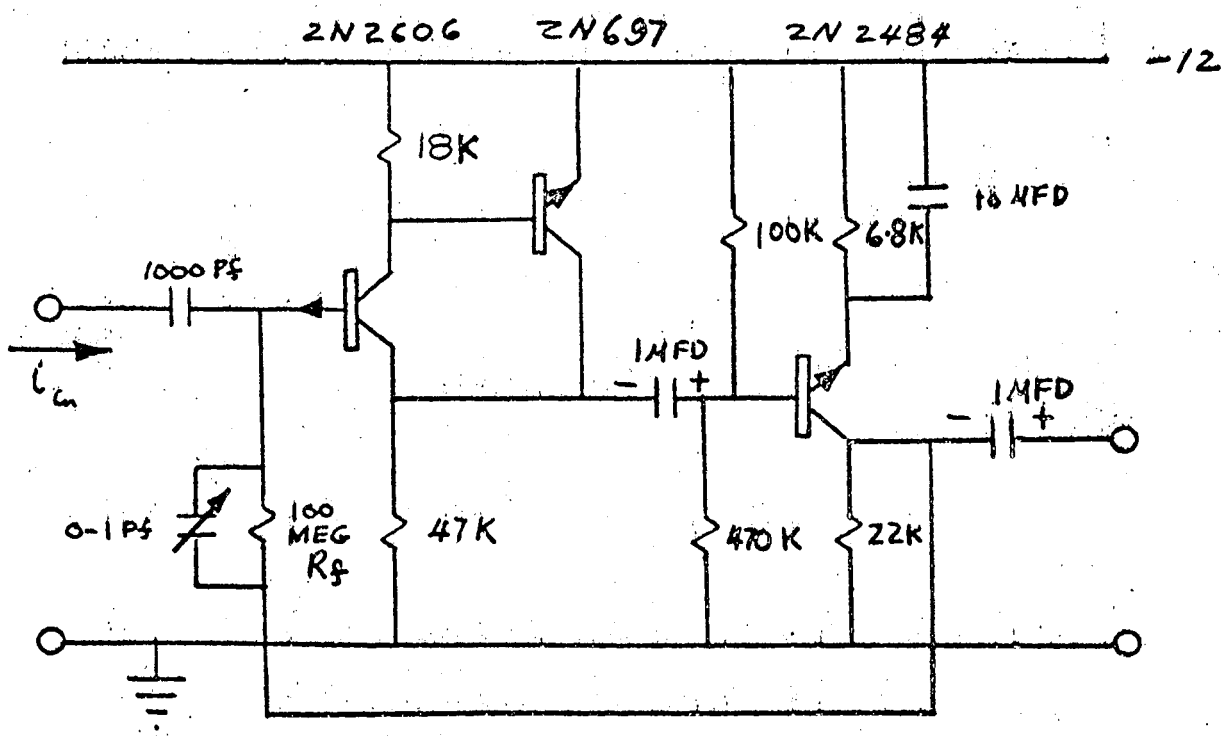

Figure 4.- Electrometer Amplifier Using Field Effect Transistor.

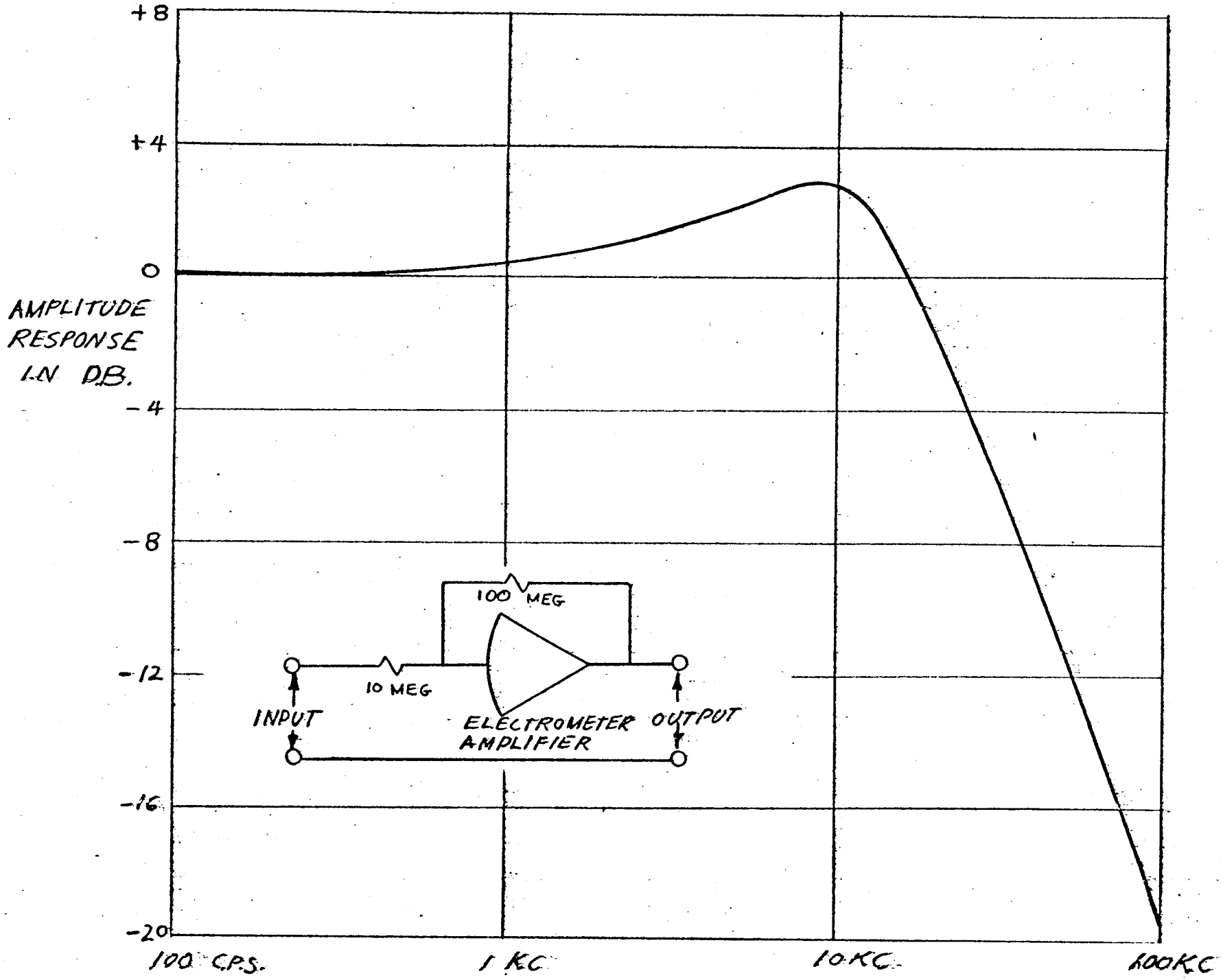

FIGURE 5 - FREQUENCY RESPONSE

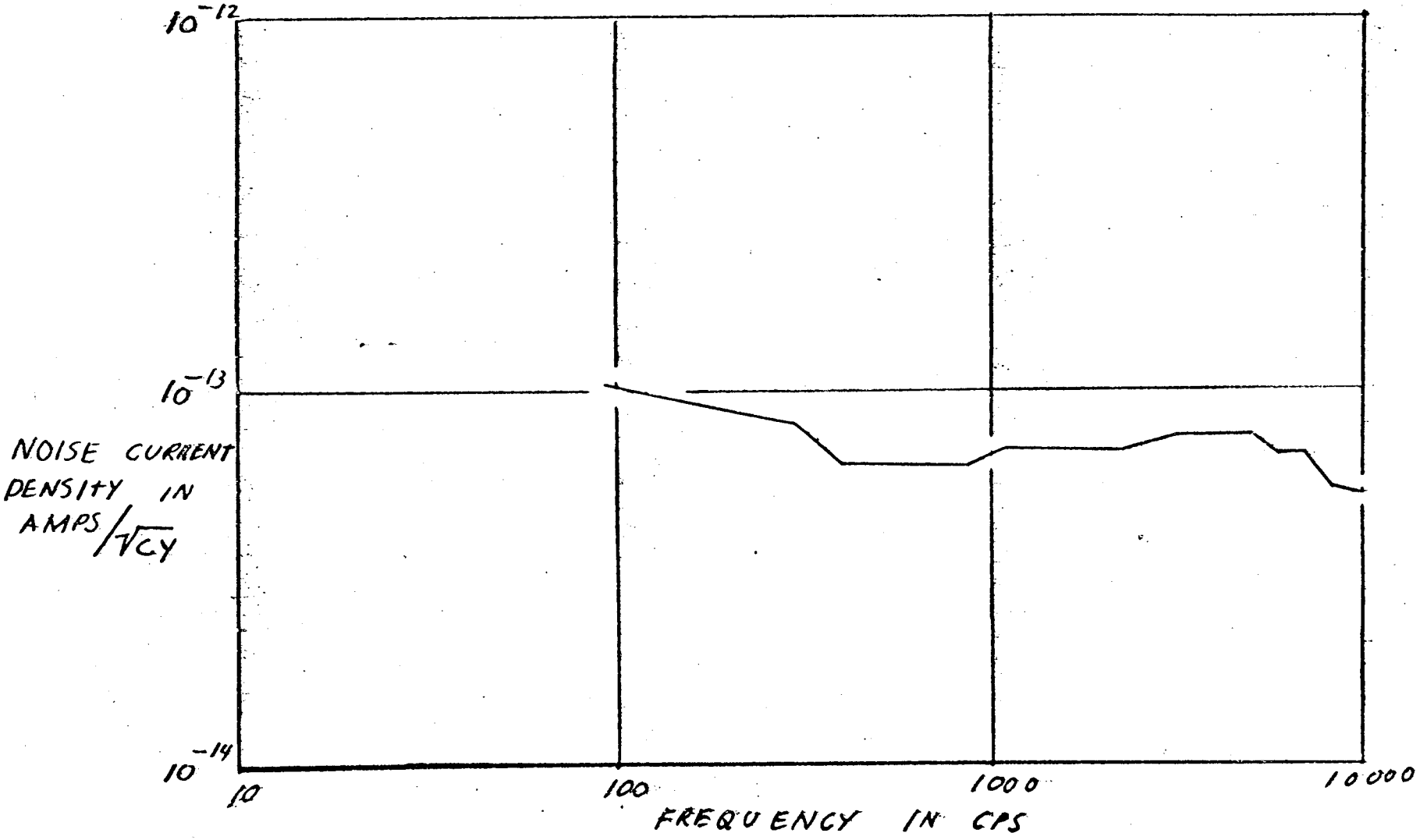

FIGURE 6

NOISE CHARACTERISTICS OF ELECTROMETER AMPLIFIER