~~Prepared for~~
Cryogenic Eng~~ineering~~ Conf.,
Boulder, Colo.,
Aug. 19, 1963

N65-88890
~~X63 16394~~

16p

Code 2 A

E-2245

PRELIMINARY TEST RESULTS ON A COMPRESSED MULTI-LAYER INSULATION SYSTEM FOR A LIQUID-HYDROGEN FUELED ROCKET

By Porter J. Perkins,
NASA-Lewis Research Center, Cleveland, Ohio

L. S. Smith (Linde Co., Tonawanda) and
Linde Company, Tonawanda, New York

and

M. A. Colaluca [1963] 6 refs Presented at the
NASA-Lewis Research Center, Cleveland, Ohio

double code
5194857

Introduction

(NASA TM X-50941)

The development of economical travel to the moon in this decade and of interplanetary exploration in the next will depend in part on the successful storage of cryogens in space. In the vacuum of space, heat transfer to the cryogens from external heat sources is primarily by radiation; thus, radiation type insulations are required. Presently available multilayer insulation materials are adequate for moderate-duration space storage when used in a vacuum. The vacuum of space is ideal for multilayer insulation, but some means must be provided to maintain a vacuum in the insulation during ground hold and boost through the atmosphere. Present multilayer insulation systems for ground storage use a heavy-walled vacuum jacket, which is impractical for flight use because of its large mass. Replacement of this outer wall with a light weight and impermeable jacket lessens the weight penalty but introduces other problems. Evacuation of the flexible jacket with external pressure compresses the multilayer insulation as shown in fig. 1. This compression

~~Available to NASA Offices and NASA Centers Only.~~

increases the apparent thermal conductivity. Small scale tests have shown that the insulation nearly recovers its original thickness when the compressive load is removed. Protection of this flexible jacket against aerodynamic loads during boost through the atmosphere may require a shrouded tank structure.

This paper deals with the design, fabrication, and testing of a jacketed multilayer insulation system. The insulation system (SI-62) employs "super insulation," refs. 1 to 3, sealed within a light-weight evacuated flexible jacket. The system was applied to a 150-gallon cylindrical cryogenic tank and tested under compression exerted by atmospheric pressure on the flexible jacket with vacuum within the insulation. This simulated the ground-hold condition on the insulation. Further tests were conducted lessening the compressive load on the insulation by reducing the external pressure on the jacket, approaching pressures outside the Earth's atmosphere. The purposes of the tests were to determine the feasibility of the super insulation concept and the thermal performance of the insulation, under ground hold and reduced pressure conditions on the insulation, and to provide data for design of future systems. Some earlier work with this concept is reported in ref. 4.

The design and application of the insulation was done for the NASA Lewis Research Center by Linde Co. under contract NAS 3-2165. Testing of the insulated tank and analysis of test results were conducted by the Flow Processes Branch of Lewis Research Center.

Insulation-System Design

The test tank, as shown in fig. 2, is made of two flanged and dished

[illegible] Office and [illegible] Center Only

48-in.-O.D. by 3/8-in.-wall, type-304 stainless steel, ASME heads separated by a 7-in.-long by 3/8-in.-thick, type-304 stainless-steel cylindrical section. A $1\frac{1}{2}$-in. schedule-5S stainless-steel neck tube was centered on one head for liquid fill, withdrawal, and instrumentation. This shape approximates that proposed for storage of fluids in space. Double curved surfaces provided an excellent test of the insulation-application technique.

Insulation consisted of 70 layers of alternate aluminum and glass-paper super insulation on each head and on the cylindrical portion. The nominal 1-in. thickness was expected from theoretical considerations to attain an insulation heat leak of 0.26 Btu/(hr)(ft^2).

Since the vessel had been designed for support from the neck tube, no attempts were made to simulate other, more practical, space-usage support systems. This was felt justified on the premise that these might tend to mask the results desired, i.e., the insulation performance data. The net heat leak through the simple neck tube was assumed to be small compared to the tank-wall heat leak.

The flexible vacuum jacket material was a laminate of 1-mil aluminum sandwiched between layers of 1/2-mil Mylar. This material was cut to the general shape of the vessel, and the joints were sealed with a contact adhesive. The closing seal for the jacket and location of the evacuation point were affected by jacketing the neck tube with an outer tube of 4-in. schedule-5S type-304 stainless steel having a two-piece 20-in.-O.D. 1/16-in.-thick, type-304 stainless-steel flange at its base for connection to the flexible jacket and a weld joint to the neck-tube flange at the top. The space between the neck tube and its jacket was filled with glass paper.

Total weight of the insulation and flexible jacket was 38 lb.

Insulation-System Application

For application of the cylindrical wraps of insulation, the tank was suspended on rollers at the neck tube and a trunnion fastened to its base as illustrated in fig. 2. Power to turn the tank was applied by electric-motor drive through the tank base and was variable up to approximately 4 rpm. Insulation material on rolls was placed approximately 6 ft from the tank, and the first layer of material was fastened to the tank with cellophane tape. Variable brakes on each insulation roll were adjusted to lay on the insulation at a tension that would produce the desired density of 70 layers per in. Note the use of dummy ends on the tank to support the insulation beyond the 10-in. straight section for later folding over on the heads. Final wrap of the insulation was terminated with cellophane tape.

Upon removal from the wrapping fixture, the tank was set in a stand with the neck tube down for removal of the bearing support and insulation of the bottom. In this position, the individual layers of glass and aluminum were folded down and 26-in. diameter disks of glass and aluminum applied at each layer. These were also fastened with cellophane tape to complete 70 layers.

The tank was then suspended in an "A" frame for application of the 70 layers of glass paper and aluminum on the top head. Each of these disks had approximately a 5-in. diameter of material removed from the center and had one radial cut to permit installation. These were laid on after folding down alternate layers of glass and aluminum as for the bottom. Following

this, several layers of Fibre-Frax high-temperature insulation material were placed on the super insulation at the neck tube area to prevent insulation damage when the stainless-steel vacuum jacket was welded together over the neck tube. The tube was wrapped with several layers of glass paper and the flexible jacket sealing flange welded in place.

Still in the "A" frame, the plastic bag material (a sheet 12 in. wide by 13 ft 4 in. long) was placed loosely around the cylindrical section and the side seam made. A 26-in.-diameter disk was used on each head, and 16 trapezoidal gores of $18\frac{1}{2}$-in. height with 6-in. and 11-in. parallel sides were glued between each end disk and the side to complete the jacket as shown in fig. 3. Minimum overlap of seams was 1 inch.

The insulation space was evacuated with a 4-in. oil diffusion pump model NRC-0121 and reinforced with an NRC-6S rotary pump. Pumping speed was sufficient to permit full evacuation to less than 10μ within an 8-hr period with the assumption of a vacuum-tight system.

After initial evacuation to approximately 1000μ, the tank was surrounded with an external helium atmosphere and the total leak rate measured by means of a mass spectrometer at the 1/4-in. probe in the neck tube. Localization of leaks consisted of reducing the tank area enclosed by the helium envelope till the leak location was found; repair consisted of painting with adhesive.

During the evacuation, the jacket and insulation were compressed by the atmospheric load, fig. 4, but returned to nearly their original condition when the vacuum was broken. This was done several times with dry nitrogen used to break the vacuum. The succeeding pump down to less than

10μ indicated that the flexible jacket was capable of holding a vacuum approaching that required for the insulation system. Both the jacket material and the adhesive were found to be very pliable under normal conditions and could be flexed without damage.

Test Procedure

The main objectives of the test program were the determination of insulation performance under ground hold compressive loads and external pressures less than 1 atm. The effect of reduced compressive loads on the insulation was investigated over a range of external pressures from 1 to 10^{-4} atm since this appeared to have a strong influence on the thermal conductivity. All tests were conducted at ambient outside temperature, ranging from 40° to 80° F. To achieve these objectives, tests were carried out at the NASA Plum Brook test facility near Sandusky, Ohio. The test tank was suspended by the neck tube in a vacuum-tight test chamber designated as the J-3 test site. A schematic drawing of the test setup is shown in fig. 5.

For the ground-hold condition, the pressure in the test chamber was maintained at atmospheric, while the insulation was evacuated to within the range of 5 to 10μ. The pressure within the test tank itself was kept at 0.35 psig by means of a back pressure regulator. The flow rate of the hydrogen gas was measured by an 0.1955-in-diameter Venturi meter and data recorded for a period of 10 hours before the test was terminated. For the second run, the test chamber was evacuated to a pressure of about 10^{-4} atm and the insulation to 0.5μ. Continuous boiloff data was recorded for a period of 220 hr, with a wet-drum gas meter used in place of the Venturi

to measure this lower flow rate. Finally, a series of tests were conducted at several test chamber pressures from 0.29 to 5 psia, which provided corresponding compressive loads on the insulation. The boiloff rate was allowed to stabilize for at least 8 hr at each external pressure condition before data were recorded. Each test lasted 12 to 24 hr.

Results and Discussion

Heat flux with a 1-atm compressive load on the tank was found to be 20 Btu/(hr)(ft^2). This is a relatively low value when compared to foam type insulations under 1 in. thick used on today's liquid hydrogen vehicles. Vacuum within the insulation for this ground-hold condition was about 5μ.

Heat flux under a reduced pressure environment of 10^{-4} atm was 0.83 Btu/(hr)(ft^2). Vacuum within the insulation for this condition was about 0.5μ. These results show that heat flux is increased by a factor of about 25 when compressed under ground-hold conditions.

These results were somewhat higher than the anticipated value of 0.26 Btu/(hr)(ft^2). Several reasons for this are evident and can be summarized as follows:

1. Vacuum within the insulation was higher than that required for negligible gas conduction. It should have been less than $10^{-1}\mu$ Hg rather than about 0.5μ as measured at the vacuum tap.

2. Application of the insulation on the unusually shaped tank was probably not optimum since this was the first attempt.

3. Residual compression on the insulation from the flexible vacuum jacket tended to produce a higher conductivity than would be expected from completely uncompressed insulation.

4. Possible heat leak down the neck tube was neglected.[a]

Figure 6 shows the relationship between the external pressure on the insulation and the heat flux into the liquid. Except for the lowest compressive load point, the results show a linear relationship on a log-log plot starting at the 1-atm ground-hold condition. The flattening of the curve at low external pressures where radiative and gas conduction effects tend to maintain the heat-flux constant, is characteristic of multilayer systems, ref. 5. Also, it was evident that the outer jacket exhibited a permanent set as the external pressure was reduced. Thus, after reaching a certain external pressure, further reduction of chamber pressure had no effect on the compressive load actually felt by the layers of insulation, although the test chamber itself was evacuated to 10^{-4} atm. The apparent pressure on the insulation was probably closer to 10^{-3} atm.

The parameter most useful in describing the thermal performance of the insulation system is an apparent thermal conductivity $K_{apparent}$. $K_{apparent}$ was determined from the standard Fourier conduction equation:

$$K_{apparent} = \left(\frac{Q}{A_s}\right)\left(\frac{\Delta x}{\Delta T}\right) \tag{1}$$

where

Q heat flux to the liquid hydrogen, Btu/hr

A_s wetted surface area, ft^2

Δx apparent thickness of insulation, ft

ΔT net temperature difference across insulation, ^{o}F

---

[a]A complete analysis of extraneous heat leaks is beyond the scope of this paper. Preliminary analysis predicts that, in the case of the neck tube, the heat leak can be as high as 5 percent of the total heat flux.

Q was determined from the boiloff data as in ref. 6. The wetted surface area was determined from the geometrical configuration of the tank and correlated to total boiloff of liquid hydrogen. The insulation thickness was found with the aid of fig. 7, a plot of layer density against compressive load supplied by Linde Co., and consideration of the fact that the insulation consisted of 70 layers. The temperature on the outer skin of the insulation was recorded while the temperature of the innermost foil was assumed to be that of saturated hydrogen (-423° F), thus ΔT is established. Substitution of these values into eq. (1) results in the determination of $K_{apparent}$.

Figure 8 shows the results of these calculations as a plot of test-tank apparent thermal conductivity against compressive load on the insulation. Test-tank $K_{apparent}$ varied from a value of 90×10^{-5} Btu/(hr)(ft)(°F) at the ground hold condition, down to about 8×10^{-5} Btu/(hr)(ft)(°F) at the lowest pressure load on the insulation. Also shown on fig. 8 is the previously published data for Linde S1-62, which fall below the present test results. Note that on the lower curve is plotted performance of a pure insulation material, while on the upper curve is shown the performance of a complete system applied to a tank. Close general agreement between the two curves regarding shape and direction indicates validity of the test results. The magnitude of the difference between the two curves indicates the proximity to the ideal as achieved in these tests.

Conclusions

Results from these preliminary tests can be summarized as follows:

1. Capability of the thin-film flexible outer jacket to hold a vacuum in the 1.0 to 0.1μ range was demonstrated.

2. Ground-hold heat flux with the insulation under 1-atm compressive load was 20 Btu/(hr)(ft^2), a value considerably lower than now being realized on today's liquid-hydrogen vehicles.

3. With the lowest compressive load on the insulation, the heat flux was about 0.83 Btu/(hr)(ft^2), a value higher than anticipated from design considerations. The vacuum within the insulation, however, was not low enough to render gas conduction negligible, and some residual compression of the insulation, due to the set experienced by the vacuum jacket, affected the actual external pressure felt by the insulation. These two conditions tend to deteriorate insulation performance.

These preliminary tests indicate that the application of this type of insulation system is feasible.

References

1. U. S. Patents 3,007,506; 3,009,600; 3,009,601 assigned to and licensed by Union Carbide Corporation.

2. Riede, P. M., and Wang, D., Advances in Cryogenic Engineering, 1959.

3. Matsch, L. C., Advances in Cryogenic Engineering, 1961.

4. Lindquist, C. R., and Niendorf, L. R., Advances in Cryogenic Engineering, 1962.

5. Wang, D., "Multiple-Layer Insulations." Aerodynamically Heated Structures, Prentice Hall, 1961, pp. 95-109.

6. Anon., Insulation for Liquid Oxygen Tanks. Rep. 5A229, NBS, February 29, 1956.

Figure Legends

Fig. 1. - Application of a compressed multilayer insulation system.

Fig. 2. - Application of insulation to test tank.

Fig. 3. - Test-tank outer-jacket configuration.

Fig. 4. - Compression of 1 atm on insulated test tank.

Fig. 5. - Test apparatus.

Fig. 6. - Heat flux as a function of compressive load on insulation.

Fig. 7. - Compression Layer-Density curve for SI-62 insulation.

Fig. 8. - Apparent thermal conductivity as a function of compressive load on insulation.

E-2245

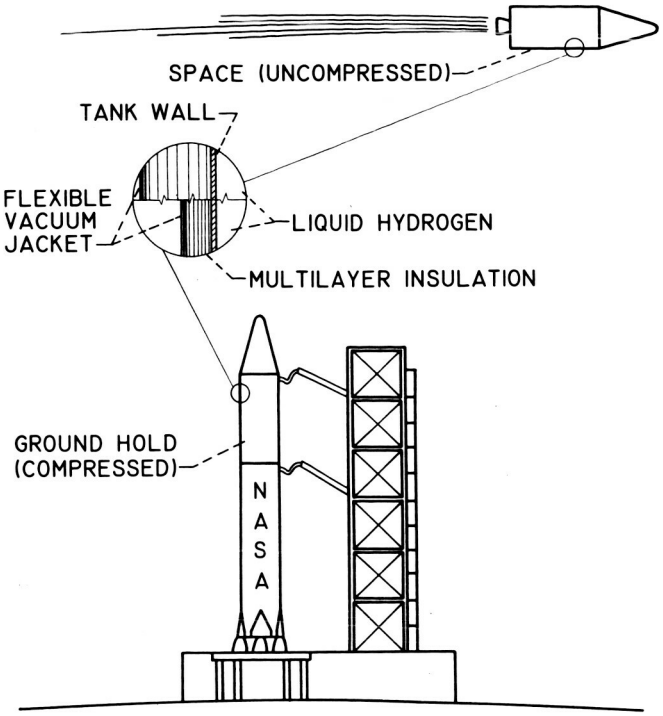

Fig. 1. - Application of compressed multilayer insulation system.

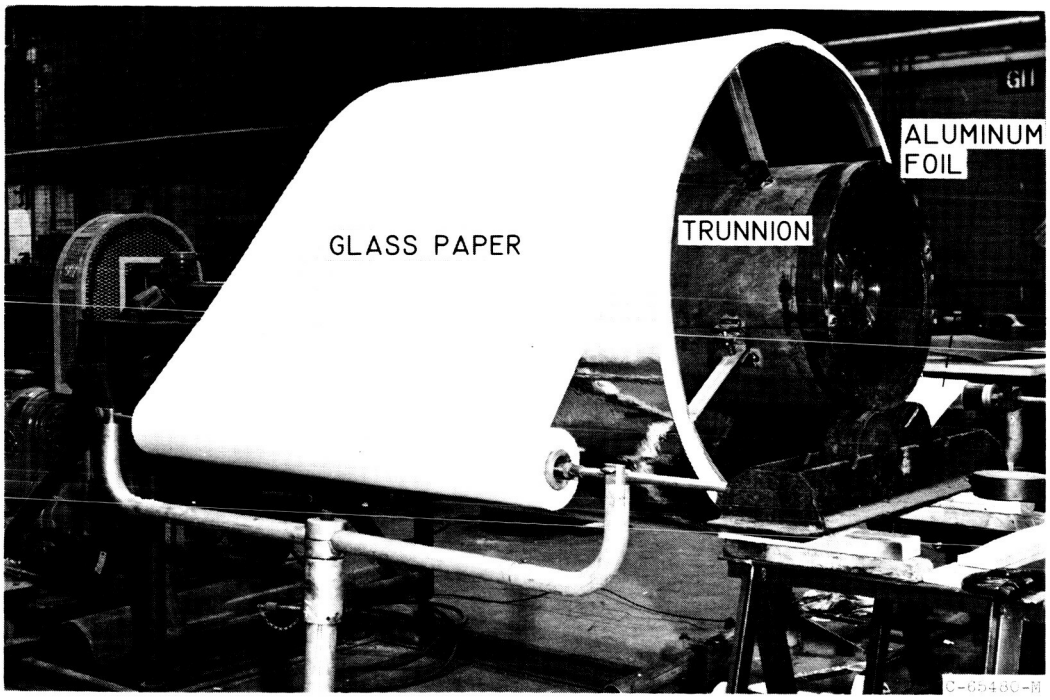

Fig. 2. - Application of insulation to test tank.

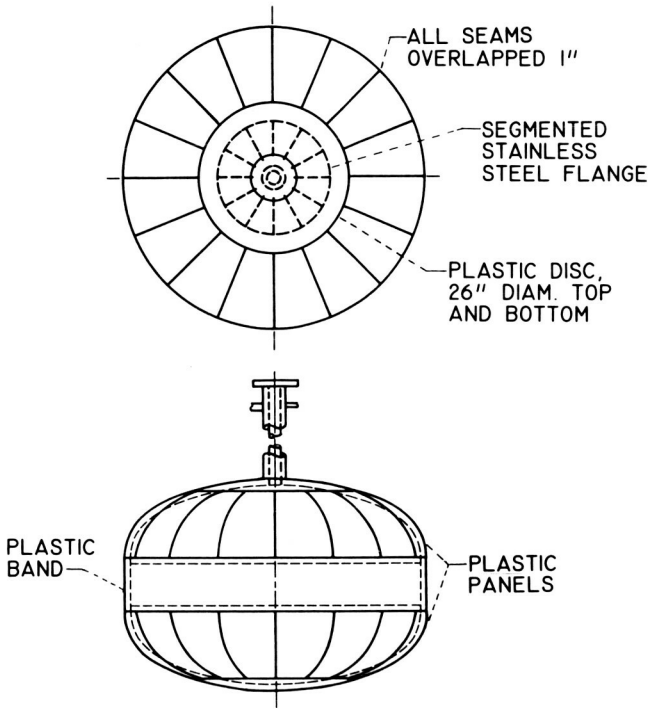

Fig. 3. - Test-tank outer-jacket configuration.

Fig. 4. - Compression of 1 atm on insulated test tank.

E-2245

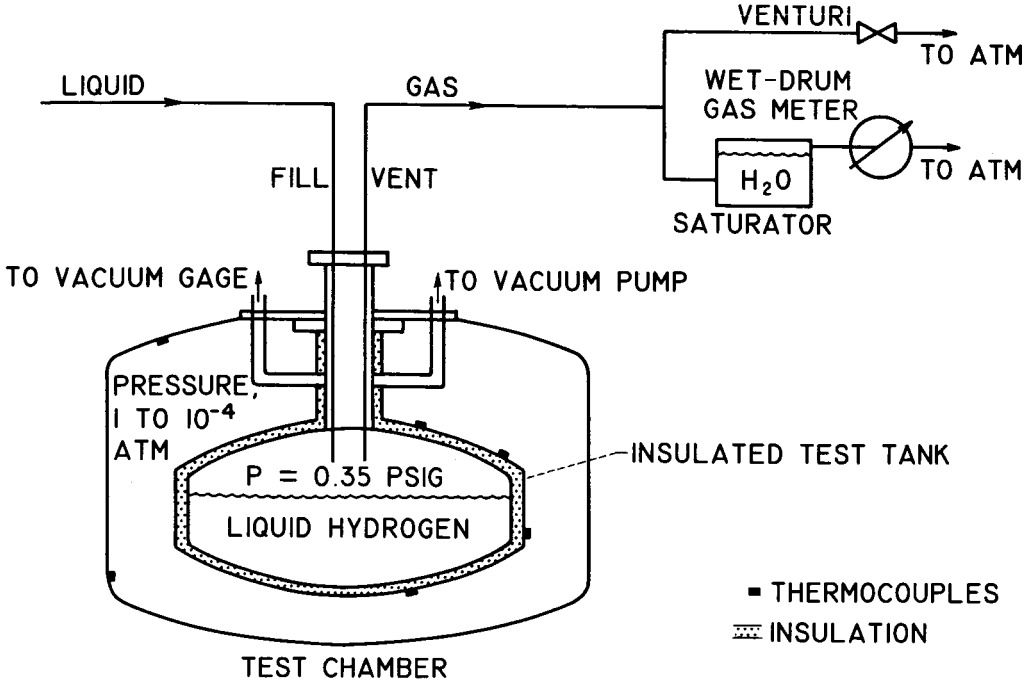

Fig. 5. - Test apparatus.

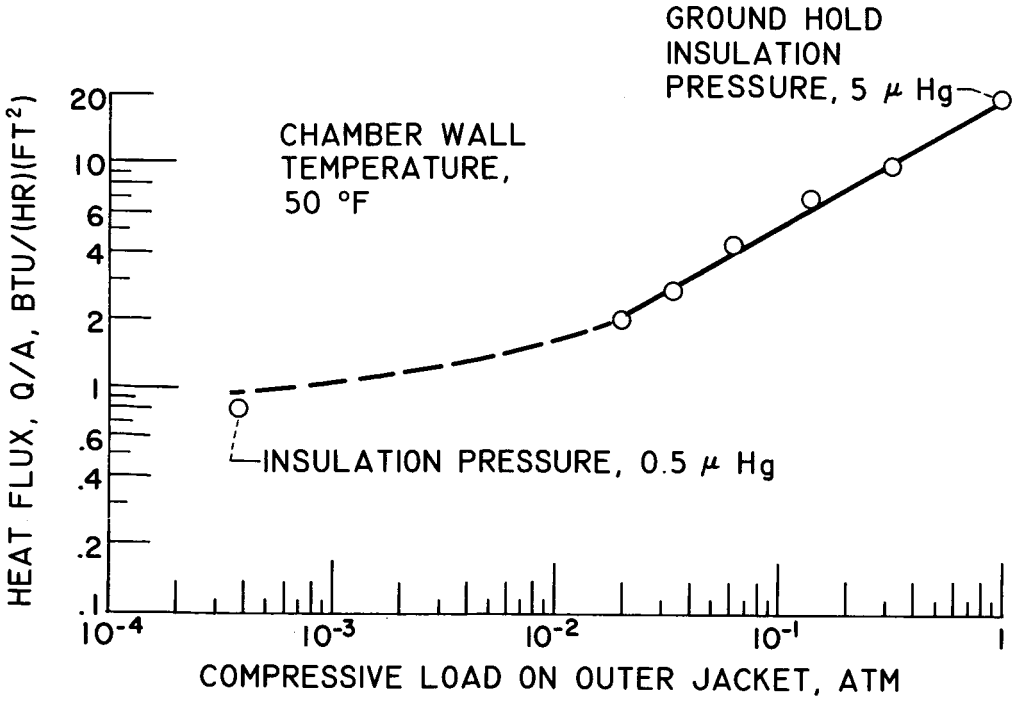

Fig. 6. - Heat flux as a function of compressive load on insulation.

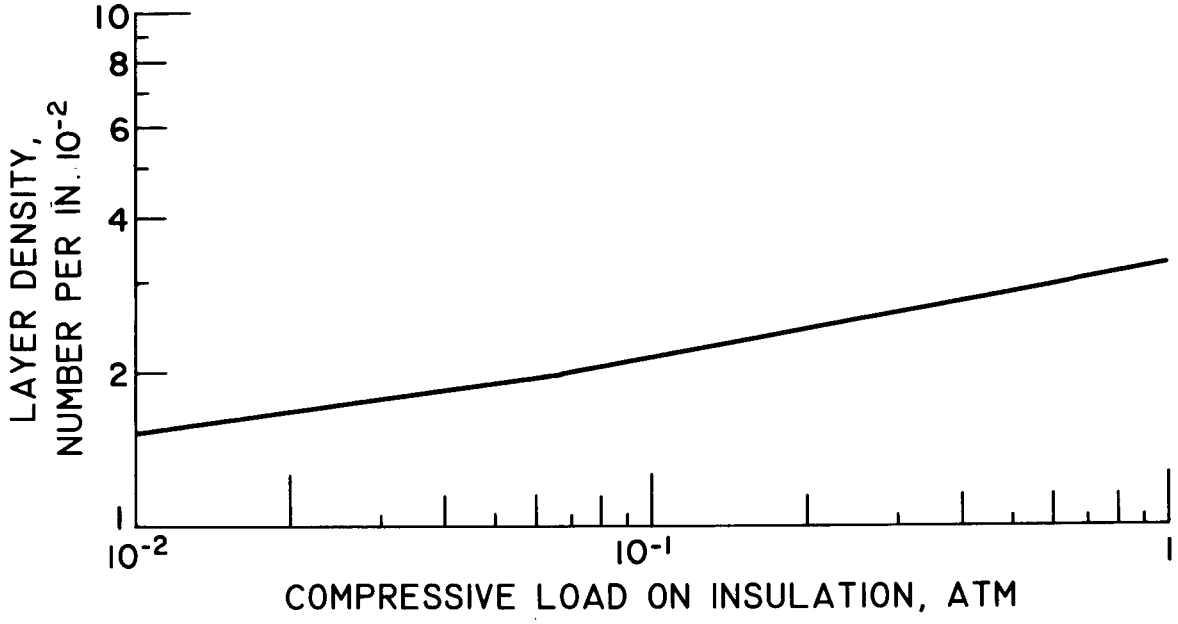

Fig. 7. - Compression-layer density curve for SI-62 insulation.

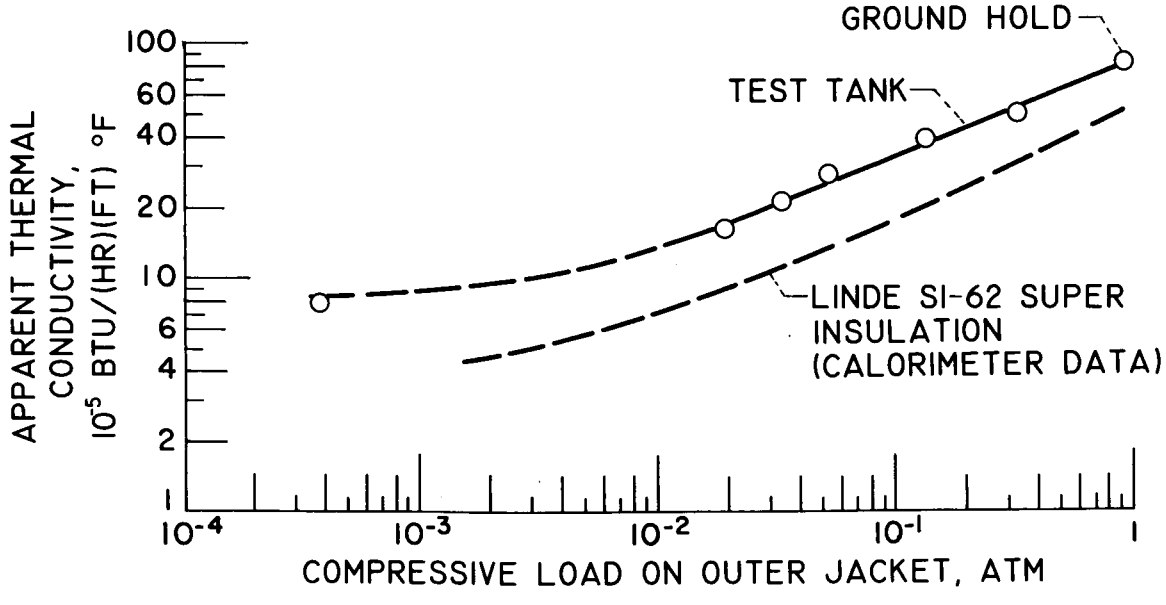

Fig. 8. - Apparent thermal conductivity as a function of compressive load on insulation.

E-2245