SMITHSONIAN INSTITUTION
ASTROPHYSICAL OBSERVATORY

Research in Space Science

SPECIAL REPORT
Number 186

PRICE $ _____
TI PRICE(S) $ _____
ard copy (HC) 2.00
icrofiche (MF) .50
July 65

DETERMINATION OF THE ABSOLUTE SPACE DIRECTIONS BETWEEN BAKER-NUNN CAMERA STATIONS

by

L. Aardoom, A. Girnius, and G. Veis

FACILITY FORM 602
N66-10686 (ACCESSION NUMBER)
(THRU)
32 (PAGES)
1 (CODE)
CR 67795 (NASA CR OR TMX OR AD NUMBER)
13 (CATEGORY)

September 6, 1965

Cambridge, Massachusetts 02138

SAO Special Report No. 186

DETERMINATION OF THE ABSOLUTE SPACE DIRECTIONS BETWEEN BAKER-NUNN CAMERA STATIONS

by

L. Aardoom, A. Girnius and G. Veis

Smithsonian Institution
Astrophysical Observatory
Cambridge, Massachusetts 02138

DETERMINATION OF THE ABSOLUTE SPACE DIRECTIONS BETWEEN BAKER-NUNN CAMERA STATIONS[1]

by

L. Aardoom,[2] A. Girnius[2] and G. Veis[3]

10686

Abstract.--From quasi-simultaneously observed satellite transits, synthetic simultaneous observations are computed. 615 pairs of such observations are used to determine fixed-Earth directions for 14 lines connecting adjacent Baker-Nunn camera stations. The method is described and the results are given. They indicate that an accuracy in the directions between 2 and 5×10^{-6} (standard deviation) is feasible. With 10 of those directions, a three-dimensional triangulation is performed with 6 of the stations.

Author

Introduction

It is well known that artificial satellites can be used as targets in a three-dimensional geodetic triangulation. Accurate photographic observations made simultaneously from two or more stations lead to a purely geometric method for the determination of fixed-Earth oriented directions of the straigl lines connecting the cooperating stations. When we combine these directions a three-dimensional triangulation net is obtained, the orientation of which can be referred to a universal terrestrial system (Veis, 1963a).

---

[1]This work was supported in part by grant number NsG 87-60 from the National Aeronautics and Space Administration.

[2]Smithsonian Astrophysical Observatory.

[3]Smithsonian Astrophysical Observatory, and the National Technical University, Athens, Greece.

In order to compute the positions of the camera stations, we should assign coordinates to one of these stations and scale the net. This scaling may either be derived from existing geodetic results, e.g., the distance between one pair of stations, or may be obtained from direct-range measurement to the satellite. This geometric approach results in coordinate differences; coordinates obtained are not necessarily geocentric.

In 1961 the Smithsonian Astrophysical Observatory started experiments in this field in order to investigate the feasibility of the method using the Baker-Nunn cameras. Preliminary results were published in a previous paper (Veis, 1963b). In the present analysis many more observations could be included and a more definite solution was attempted for the relative orientation of the lines connecting some of the Baker-Nunn cameras. In addition to the directions, relative positions have been determined when the lines of known orientation could form a triangle.

The method and technique of simultaneous synthetic observations

The configuration of the Baker-Nunn net (see Figure 1)[4] with mutual distances between adjacent stations from about 2 to 7 Mm requires the use of satellites in relatively high orbits. For several reasons Satellites 1961 28A (Midas 4) and 1963 30D proved to be most useful for our purpose. Satellites 1961 4A (Explorer 9) and 1962 29A (Telstar 1) were used to a lesser extent. These satellites orbiting at a height between 2 and 4 Mm require a simultaneity of preferably better than 2 milliseconds, necessary to match the directional accuracy of the Baker-Nunn cameras. Using a modified cycle-control system (Veis, 1963b) the cameras may be set so that the shutters will be activated at an exactly predetermined time. With this mode of operation a simultaneity within 1 or 2 milliseconds can be obtained. As was pointed out by Veis (1963b), exact simultaneity of observations is not necessary and sufficiently accurate synthetic simultaneous observations may be derived by interpolation in simultaneously observed satellite transits. Considering the simplicity of operation and the reduction of setup time involved, the method of synthetic simultaneous observations is applied rather than the method of strictly simultaneous observations.

[4] In the figures and tables station numbers are abbreviated, writing "1" instead of "9001" etc.

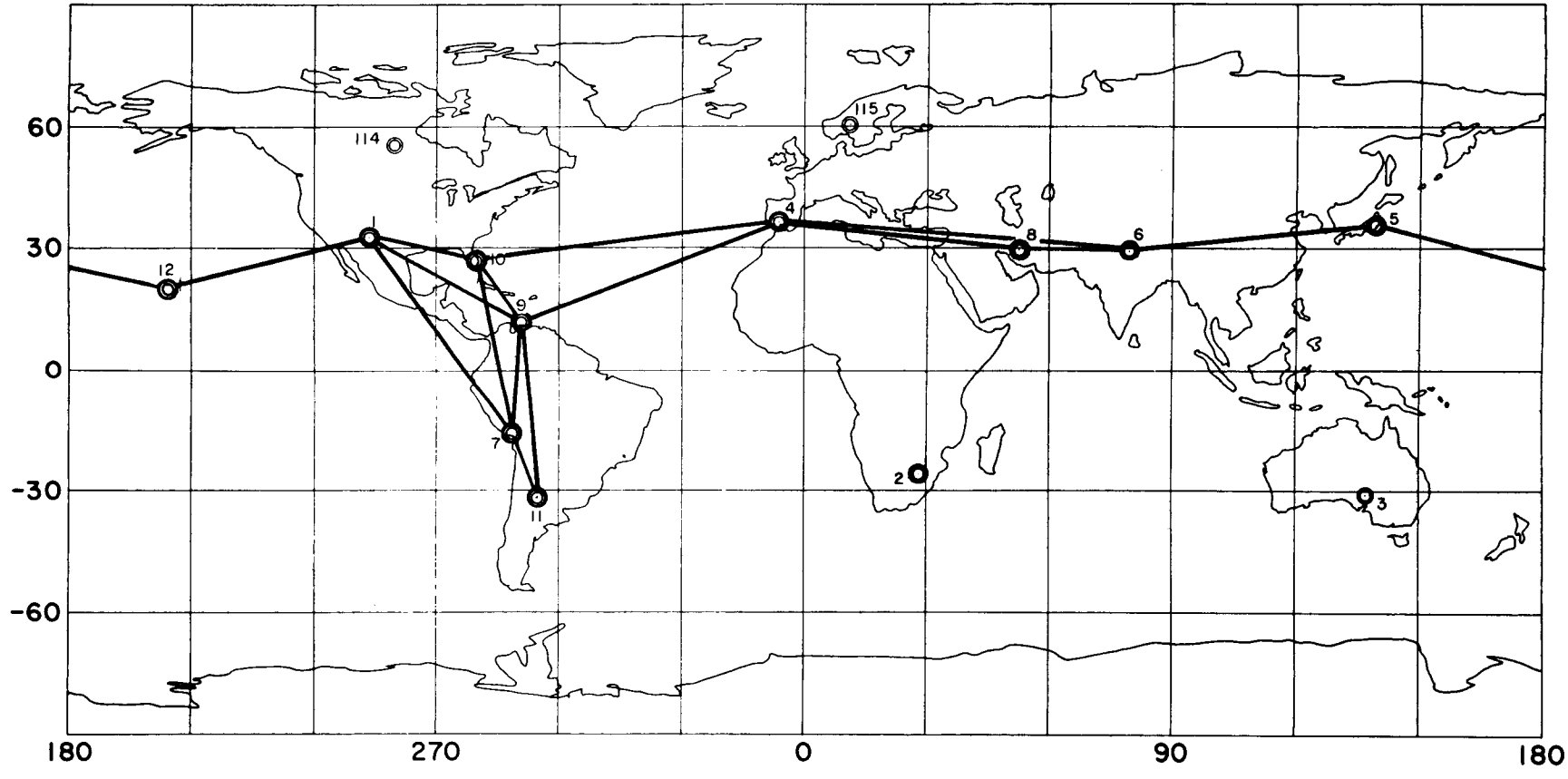

Figure 1. Baker-Nunn camera network. Lines connect stations between which simultaneous satellite transits had been successfully observed by September 1964.

The basic material for the computation of a synthetic observation consists of a sequence (arc) of at least four exposures (frames) with associated times from each of the cooperating stations. Depending on the velocity and the brightness of the satellite, the interval between two subsequent exposures is 2, 4, 8 or 16 seconds, intervals of 4 and 8 seconds being typical. A time-overlap (t) between sequences of exposures is required (Figure 2). From each sequence of exposures and associated times, a sequence of directions expressed as R. A. (α) and Decl. (δ) to the satellite versus A-1 (atomic time) is obtained. To avoid computational difficulties in the interpolation in case the satellite was observed in a direction close to the celestial pole, the directions in α, δ are transformed into directions ξ, η referred to an auxiliary system of reference (Figure 3). Let $\underset{\sim}{v}_1$ and $\underset{\sim}{v}_n$ denote the topocentric unit-vectors specifying the directions to the satellite at the moments of the first and the last observations in the sequence, respectively. Then the axes $\underset{\sim}{k}^1$, $\underset{\sim}{k}^2$, $\underset{\sim}{k}^3$ of the auxiliary system are defined by

$$\underset{\sim}{k}^1 = \underset{\sim}{v}_1 \quad ,$$

$$\underset{\sim}{k}^3 = \frac{\underset{\sim}{v}_1 \times \underset{\sim}{v}_n}{\left|\underset{\sim}{v}_1 \times \underset{\sim}{v}_n\right|} \quad ,$$

$$\underset{\sim}{k}^2 = \underset{\sim}{k}^3 \times \underset{\sim}{k}^1 \quad .$$

From experience it seems justified to assume second-degree polynomial relationships of angles ξ and η with time (A-1). The coefficients involved are determined by least-squares approximation, considering angles ξ as well as η to be mutually independent quantities of equal weight. Also angles ξ and η, being counted along--respectively perpendicular to--the apparent path of the satellite, are supposed to be independent. The time T_q of the center of the overlap (Figure 2) is chosen as the time of the interpolated synthetic observation. The corresponding interpolated direction α_q, δ_q is obtained

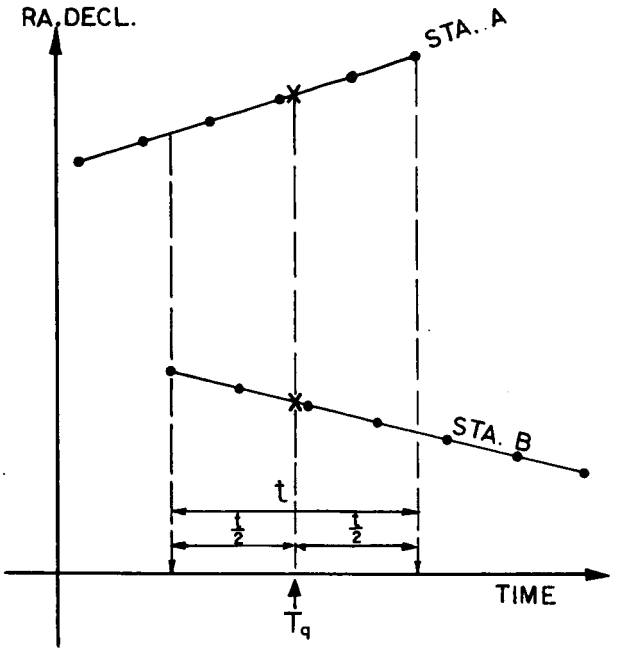

Figure 2. Interpolation of synthetic simultaneous observation between stations A and B for time T_q.

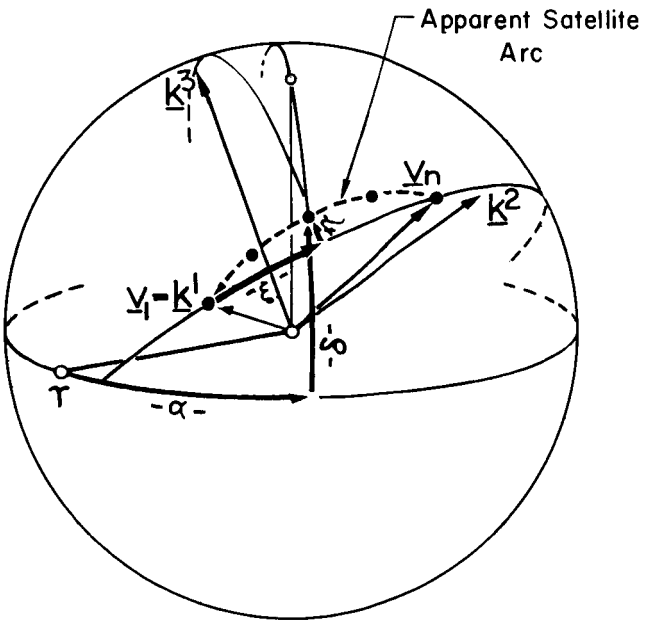

Figure 3. Relation between α, δ - and ξ, η - systems.

from the least-squares fitted polynomials followed by a reverse transformation to the regular system of astronomical directions. If more than two stations participate at a time, triple or multiple synthetic simultaneous observations may be computed. For the time being, however, only pairs of simultaneous observations are handled, and triples and multiples are grouped in pairs.

Thus a pair of synthetic simultaneous observations between stations A and B consists of a set T_q; α_q^A, δ_q^A; α_q^B, δ_q^B. For the computation of such a set a maximum of 10 exposures is used from each of the stations A and B. If more than 10 exposures are available, it is meaningful to subdivide the sequence of exposures into smaller groups, and compute more than one pair of synthetic observations. Hence more than one pair of synthetic simultaneous observations may result from one sequence (arc) of observations. Also, one satellite transit may yield more than one arc.

The analysis of the synthetic observations

Right ascension α_q and declination δ_q of the synthetic observations refer to the equator and equinox of 1950.0. Times T_q are expressed in the A-1 system. Precisely reduced Baker-Nunn observations have been corrected for the effect of annual aberration. Because the maximum effect is less than 0".3 the precisely reduced observations have not been corrected for diurnal aberration. However, since the station-velocity vectors have invariable directions with respect to a fixed-Earth system of reference, it can be pointed out that diurnal aberration affects systematically the final result of the simultaneous method. Therefore, directions α_q, δ_q are corrected for diurnal aberration. The systematic effect of the diurnal aberration is of the order of the accuracy attained. Also a correction is applied for the aberrational effect caused by the velocity of the satellite with respect to the observing station. Finally, a correction is applied for parallactic refraction, the difference between the amounts of optical refraction for the star background and the satellite resulting from the finite distance to the satellite.

The true geometric directions obtained in this way are referred to the celestial system of epoch 1950.0. They are reduced to a fixed-Earth, terrestrial system of directions along the lines pointed out by Veis (1963a). In this reduction the effect of the motion of the pole with respect to the Earth's surface is neglected.

In the fixed-Earth system a pair of synthetic simultaneous directions to the satellite from stations A and B can be expressed as unit-vectors $\underset{\sim}{p}$ and $\underset{\sim}{q}$, respectively. The normal unit-vector

$$\underset{\sim}{n} = \frac{\underset{\sim}{p} \times \underset{\sim}{q}}{|\underset{\sim}{p} \times \underset{\sim}{q}|}$$

specifies a plane (<u>position plane</u>), which implies a condition for the direction of the line AB referred to the terrestrial system. Each pair of synthetic simultaneous observations between stations A and B results in a position plane. The combination of more than two such planes leads to an over-determined system of conditions from which the direction of line AB can be solved by least-squares adjustment.

Using approximate initial values for the rectangular coordinates of A and B, we can reduce this apparently three-dimensional problem of intersection of planes to the two-dimensional problem of intersection of lines. This is accomplished by introduction of the special local system of reference g^1, g^2, g^3 (Veis, 1963b). This system is centered at the assumed position $\bar{B}$ of station B (Figure 4), and the directions of the axes are defined by the mutually perpendicular unit-vectors:

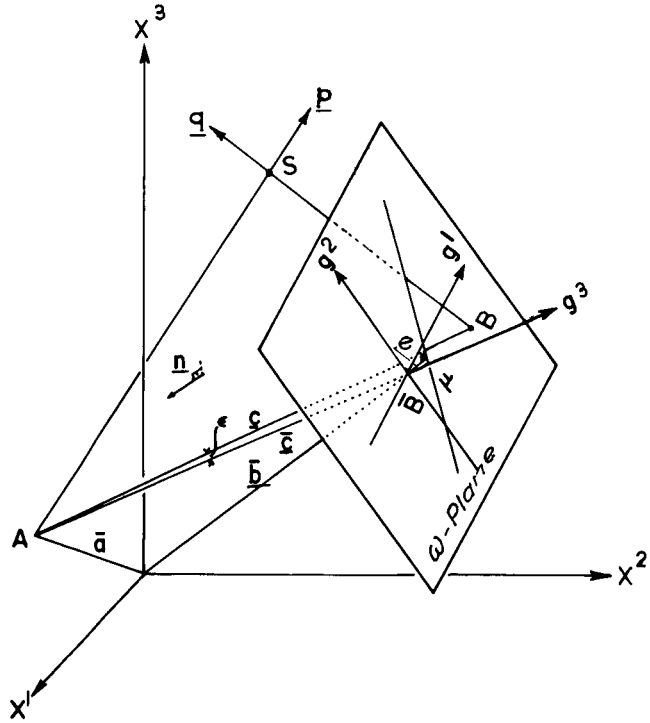

Figure 4. The geometry of the intersection of position planes.

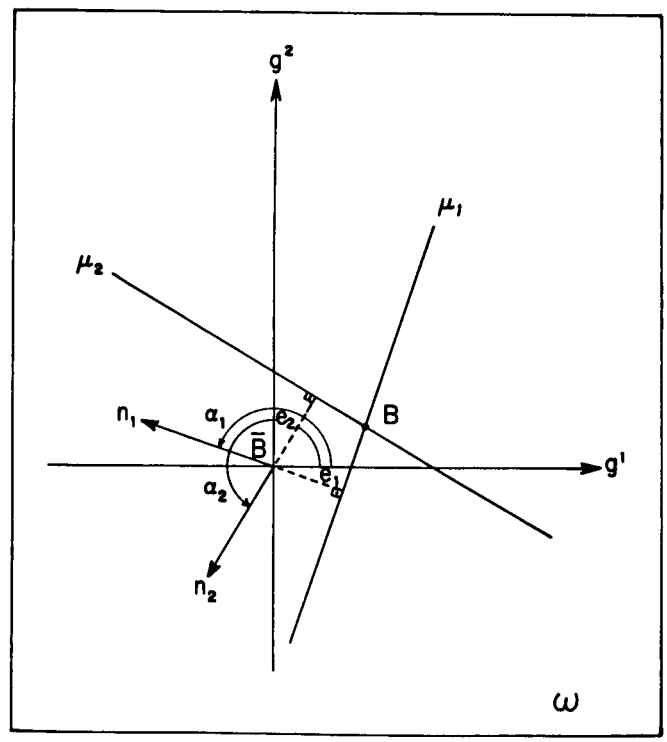

Figure 5. Position lines in ω-plane.

$$\underset{\sim}{g}_3 = \begin{pmatrix} g_3^1 \\ g_3^2 \\ g_3^3 \end{pmatrix} = \frac{\underset{\sim}{b} - \underset{\sim}{a}}{|\underset{\sim}{b} - \underset{\sim}{a}|} \quad ,$$

$$\underset{\sim}{g}_1 = \begin{pmatrix} g_1^1 \\ g_1^2 \\ g_1^3 \end{pmatrix} = \frac{\underset{\sim}{a} \times \underset{\sim}{b}}{|\underset{\sim}{a} \times \underset{\sim}{b}|} \quad ,$$

$$\underset{\sim}{g}_2 = \begin{pmatrix} g_2^1 \\ g_2^2 \\ g_2^3 \end{pmatrix} = \underset{\sim}{g}_3 \times \underset{\sim}{g}_1 \quad ,$$

where $\underset{\sim}{a}$ and $\underset{\sim}{b}$ stand for the radius vectors of the positions assumed for stations A and B in the terrestrial system. The direction of the 3-axis coincides with the assumed initial direction of line AB. The 1-axis is perpendicular to the plane that contains the origin of the terrestrial system and the assumed positions of A and B. Roughly speaking, the 2-axis is perpendicular to the Earth's surface. The g^1, g^2-plane (ω-plane) is perpendicular to line AB in its initial direction.

Since the problem is to determine the <u>direction</u> between A and B, station A can be supposed to be known, which means that all position planes contain station A in its initial location. As a rule, because the assumed coordinate differences between A and B are in general not consistent with the results of the simultaneous method, normal-vectors $\underset{\sim}{n}$ are not parallel with the ω-plane. Therefore the position planes intersect the ω-plane along <u>position lines</u> which in general do not contain point $\overline{B}$.

The equations of these position lines are of the form

$$(\cos \alpha) \cdot g^1 + (\sin \alpha) \cdot g^2 = - e \quad , \tag{1}$$

where α stands for the angle between the positive direction of vector $\underset{\sim}{n}$ and the 1-axis (Figure 5). It is more straightforward to divide equation (1) by the distance λ between stations A and B and proceed with angular, rather than with linear quantities:

$$(\cos \alpha_i) \cdot j^1 + (\sin \alpha_i) \cdot j^2 = - \epsilon_i, \quad i = 1 \ldots . \upsilon \, , \tag{2}$$

where $j^1 = g^1/\lambda$, $j^2 = g^2/\lambda$, ϵ_i is obtained from $\epsilon = \underset{\sim}{n} \cdot \underset{\sim}{g}_3$ and υ is the number of position lines available for line AB.

Supposing $\upsilon > 2$, the set of condition equations (2) are solved for j^1 and j^2 by means of least-squares adjustment. Quantities ϵ_i are considered as independent, and weights w_i are computed from

$$w_i = \frac{\lambda^2}{p_i^2 + q_i^2} \, , \tag{3}$$

where p_i and q_i stand for the distances of stations A and B to the satellite, respectively. Weighting formula (3) disregards the effect of imperfect simultaneity of the synthetic observations resulting from relative timing errors between the stations. As remarked by Veis (1963b), however, the contribution of this effect is negligible most of the time.

From the least-squares adjustment the variance-covariance matrix of the solution and the associated standard ellipse are computed. From the solution j^1, j^2, corrections δ^1, δ^2, δ^3 to the initial values c_0^1, c_0^2, c_0^3 for the direction cosines of the line AB can easily be obtained (Veis, 1963b):

$$\begin{pmatrix} \delta^1 \\ \delta^2 \\ \delta^3 \end{pmatrix} = G^T \cdot \begin{pmatrix} j^1 \\ j^2 \\ 0 \end{pmatrix} ,$$

where G^T denotes the transpose of matrix

$$\begin{pmatrix} g_1^1 & g_1^2 & g_1^3 \\ g_2^1 & g_2^2 & g_2^3 \\ g_3^1 & g_3^2 & g_3^3 \end{pmatrix} .$$

Corrections j^1 and j^2 as such are roughly corrections to the elevation and the azimuth of the line $A\overline{B}$.

Results

Using the precisely reduced simultaneous Baker-Nunn camera observations through September 1964, we could attempt solutions for the directions of fourteen lines in the net. The results, with some additional information, are shown in Table 1. It should be emphasized that the directions obtained refer to the terrestrial system to which the synthetic observations have been reduced. This is the x^1, x^2, x^3-system, in which the 3-axis has the direction of the Earth's mean axis of rotation; the 1-3 plane is parallel to the mean meridian of Greenwich (Veis, 1963a).

Successful simultaneous observations have also been made between stations 9002 and 9008, 9004 and 9006, 9005 and 9012, but not enough material is available yet to determine these directions.

The initial values c_0^1, c_0^2, c_0^3 for the direction cosines of the lines connecting the stations and the distances λ_0 between the stations are based on the following coordinates (in megameters).

Table 1. Results of adjustment of position lines

Line between stations		1 → 7	1 → 9	1 → 10	1 → 12	4 → 8	4 → 9	4 → 10
Initial direction cosines	c_0^1	+.5532940	+.8673530	+.9654361	-.7952883	-.3267988	-.4414246	-.6274813
	c_0^2	-.1013319	-.1488285	-.1669452	+.5590625	+.9374779	-.8138880	-.7668135
	c_0^3	-.8267996	-.4749198	-.2001561	-.2344478	-.1197401	-.3777971	-.1351453
Initial distance	λ_0 (Mm)	6.286827	4.366784	2.601955	4.942128	5.289955	6.464936	6.580760
Number of position lines	ν	13	80	89	45	57	11	5
Solution	$10^6 . j^1$	+6.3 ± 1.2	+3.7 ± 0.9	+4.3 ± 1.1	+52.4 ± 2.0	-1.3 ± 1.5	+10.6 ± 2.6	+7.6 ± 1.8
	$10^6 . j^2$	+21.5 ± 5.9	+2.4 ± 2.3	+7.5 ± 2.8	+7.2 ± 4.6	+2.3 ± 3.6	-10.1 ± 7.5	-15.3 ± 10.5
Standard deviation of unit weight	$10^6 . \hat{\sigma}$	3.5	4.9	4.3	7.5	6.7	5.4	3.4
Standard ellipse	$10^6 . a$	5.9	2.3	2.8	4.7	3.7	7.7	10.5
	$10^6 . b$	1.2	0.9	1.0	1.7	1.3	2.1	1.8
	θ	89°	83°	84°	104°	77°	102°	90°
Corrected direction cosines	$\bar{c}^1$	+.5533001	+.8673550	+.9654369	-.7952987	-.3267963	-.4414250	-.6274857
	$\bar{c}^2$	-.1013524	-.1488293	-.1669496	+.5590305	+.9374788	-.8138816	-.7668072
	$\bar{c}^3$	-.8267930	-.4749159	-.2001486	-.2344886	-.1197398	-.3778103	-.1351606

Table 1. Results of adjustment of position lines (Cont.)

Line between stations		5 → 6	6 → 8	7 → 9	7 → 10	7 → 11	9 → 10	9 → 11
Initial direction cosines	c_0^1	+.9152297	+.9110394	+.0984531	-.2021741	+.1850270	-.6310564	+.0060399
	c_0^2	+.3880093	-.4121899	-.0040919	+.0423978	+.4871346	+.1066262	+.1892284
	c_0^3	-.1086435	+.0103246	+.9951333	+.9784314	-.8535016	+.7683740	-.9819145
Initial distance	λ_0 (Mm)	5.424493	2.589061	3.139352	4.780252	1.826128	2.021249	4.768925
Number of position lines	ν	7	90	58	19	38	68	35
Solution	$10^6 \cdot j^1$	-20.6 ± 3.9	+40.0 ± 1.9	+4.1 ± 1.6	+8.9 ± 1.9	-22.3 ± 3.9	+2.5 ± 2.2	-17.3 ± 1.9
	$10^6 \cdot j^2$	+8.8 ± 8.6	-9.8 ± 3.6	-13.1 ± 2.9	-4.1 ± 4.7	-8.8 ± 7.3	-3.2 ± 4.2	+10.6 ± 4.0
Standard deviation of unit weight	$10^6 \cdot \hat{\sigma}$	6.7	5.7	5.0	5.4	9.2	5.7	6.6
Standard ellipse	$10^6 \cdot a$	8.7	3.7	2.9	4.8	7.3	4.2	4.0
	$10^6 \cdot b$	3.7	1.7	1.6	1.9	3.9	2.2	1.8
	θ	99°	108°	80°	94°	97°	92°	82°
Corrected direction cosines	$\bar{c}^1$	+.9152339	+.9110446	+.0984448	-.2021835	+.1850034	-.6310591	+.0060280
	$\bar{c}^2$	+.3880055	-.4121797	-.0040810	+.0423994	+.4871374	+.1066280	+.1892122
	$\bar{c}^3$	-.1086218	+.0102850	+.9951341	+.9784294	-.8535051	+.7683716	-.9819177

Station	x_0^1	x_0^2	x_0^3
9001	-1.535702	-5.167026	3.401108
9002	5.056123	2.716523	-2.775799
9003	-3.983602	3.743226	-3.275656
9004	5.105623	-0.555194	3.769670
9005	-3.946522	3.366453	3.698855
9006	1.018135	5.471207	3.109519
9007	1.942762	-5.804082	-1.796838
9008	3.376872	4.404022	3.136250
9009	2.251841	-5.816928	1.327236
9010	0.976319	-5.601410	2.880311
9011	2.280645	-4.914512	-3.355441
9012	-5.466118	-2.404068	2.242437

The solutions j^1, j^2 are given together with their standard deviations; $\hat{\sigma}$ is an estimate of the standard deviation of unit weight, obtained from the residuals of the least-squares approximation of j^1 and j^2. Unit weight is assigned to a quantity ϵ derived from a pair of synthetic observations for which $p^2 + q^2 = \lambda^2$, thus intersecting at right angles; see equation (3). Insofar as correlation between synthetic simultaneous observations can be neglected (a supposition which probably does not hold), quantities σ represent the accuracy of a single interpolated observation in the direction perpendicular to the position plane.

Standard ellipses on the ω-planes are represented by their semimajor and semiminor axes a and b and the angle θ between the major axis and the g^1-axis; a and b are based on $\hat{\sigma}$. The phenomenon of θ being relatively close to 90° is typical for the method. Because of local conditions of visibility and the limitations set by optical refraction, the theoretical limits for the angle α, $90^\circ < \alpha < 270^\circ$ are never reached in practice. On the other hand, the angles will tend to be symmetrically distributed with respect to the g^2-axis. This is illustrated by Figure 6, where the range of actual α-90° is given for some cases. As a rule, the range for α-90° will be larger if the distance between the stations is shorter. Considering this distribution of observations, it is obvious that the direction between the stations will be determined more

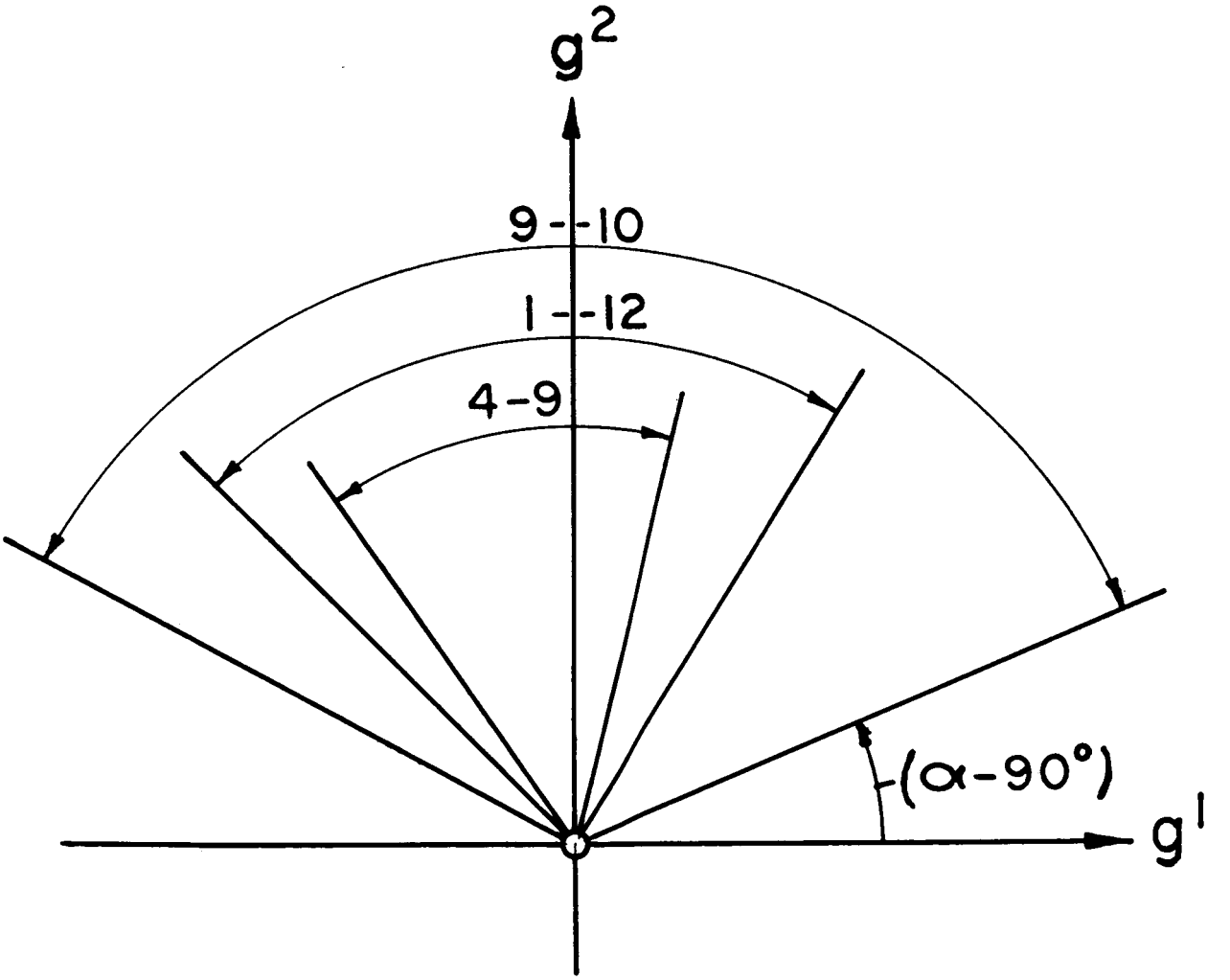

Figure 6. Limits of distribution of position planes.

accurately along the g^1-axis (azimuth) than along the g^2-axis (elevation). Consequently, the major axis of the standard ellipse will, practically speaking, be oriented in g^2-direction.

By means of equation (4), the corrections δ^1, δ^2, δ^3 are computed from j^1, j^2. These corrections are added to c_0^1, c_0^2, c_0^3 and the corrected direction cosines are given as $\bar{c}^1$, $\bar{c}^2$, $\bar{c}^3$.

As an example, in Figure 7 the position lines for the line 9007-9010 have been plotted, together with the resulting most probable intersection. Also the standard ellipse has been drawn. For the other cases, the position lines have been omitted (Figures 8a,b,c); the numbers of position lines ν, however, have been indicated between parentheses. In Figure 9 the standard ellipses are given in terms of microradians (units of 10^{-6}).

A three-dimensional triangulation

The results of the preceding paragraph consist of the directions of lines, each individually oriented in the fixed-Earth terrestrial system of reference. Since no distances have been measured, this will be the final result of this investigation as far as the lines 9001-9012, 9004-9008, 9005-9006 and 9006-9008 are concerned. However, if all three directions between three stations have been determined, as is the case for stations 9001, 9009, and 9010, the unit-vectors specifying these directions have to satisfy the condition of coplanarity.

Mathematically this condition reads for triangle 9001-9009-9010:

$$\begin{vmatrix} \ell_{1,9} + \Delta\ell_{1,9} & m_{1,9} + \Delta m_{1,9} & n_{1,9} + \Delta n_{1,9} \\ \ell_{1,10} + \Delta\ell_{1,10} & m_{1,10} + \Delta m_{1,10} & n_{1,10} + \Delta n_{1,10} \\ \ell_{9,10} + \Delta\ell_{9,10} & m_{9,10} + \Delta m_{9,10} & n_{9,10} + \Delta n_{9,10} \end{vmatrix} = 0 , \qquad (5)$$

where for reasons of simplicity $\bar{c}^1$, $\bar{c}^2$ and $\bar{c}^3$ for the line connecting stations 9001 and 9009 have been denoted by $\ell_{1,9}$, $m_{1,9}$ and $n_{1,9}$, etc.; $\Delta\ell_{1,9}$, $\Delta m_{1,9}$ and $\Delta n_{1,9}$ etc. are corrections to $\ell_{1,9}$, $m_{1,9}$ and $n_{1,9}$, respectively. In practice, the squares and higher-order powers of these corrections are negligibly small

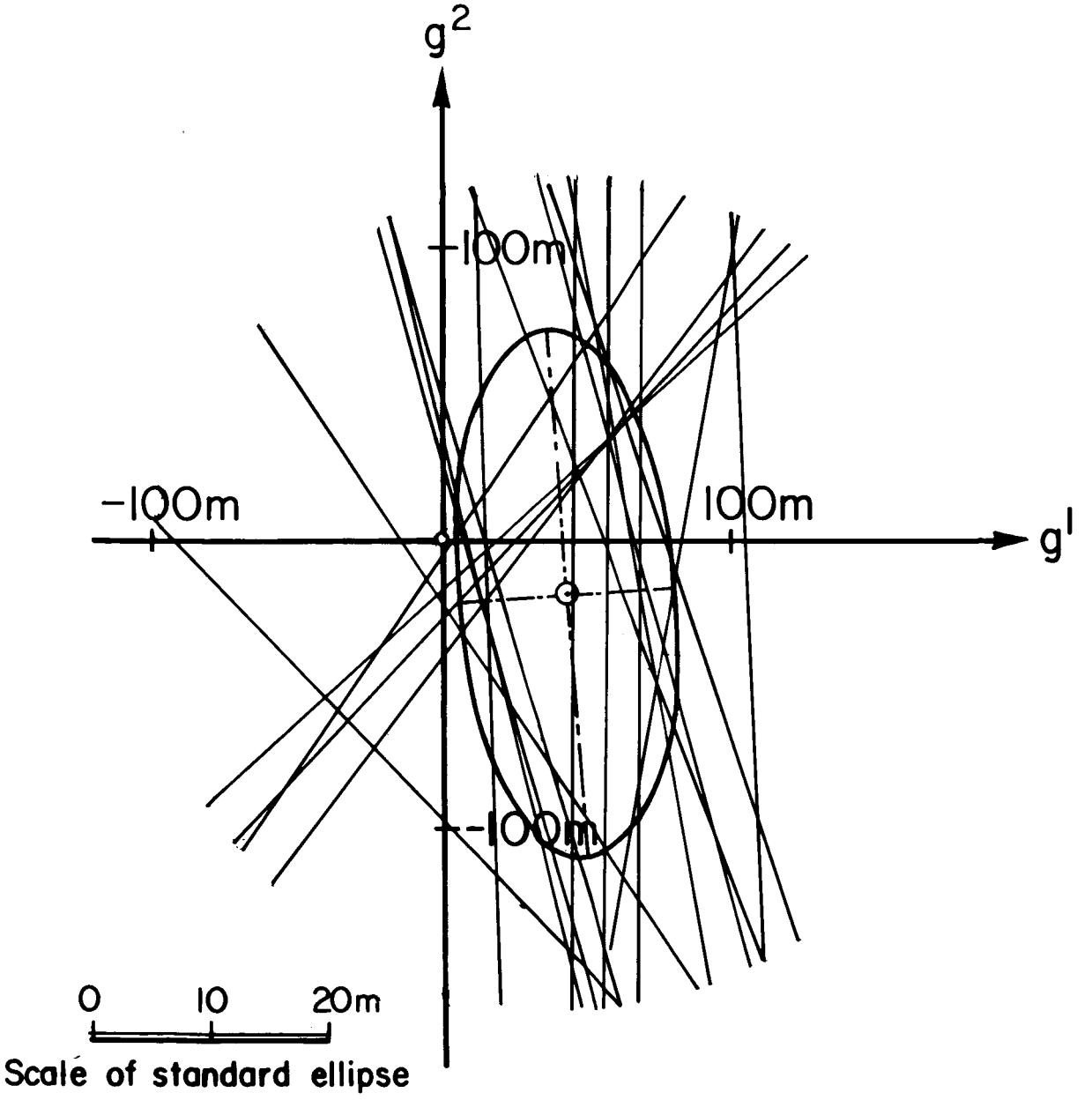

Figure 7. Position lines, solution and standard ellipse for line 9007 to 9010.

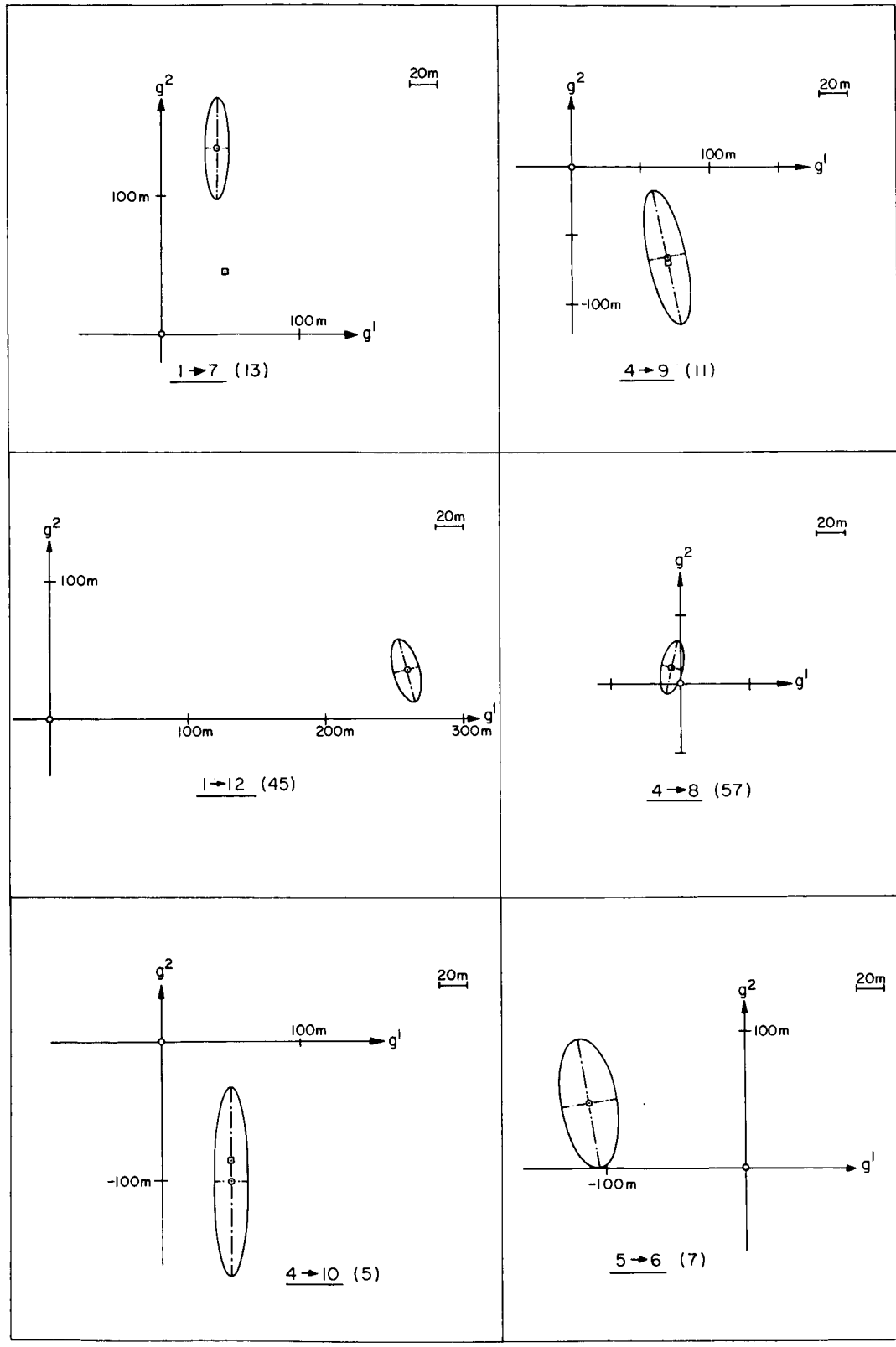

Figure 8a. Solutions and standard ellipses in meters.

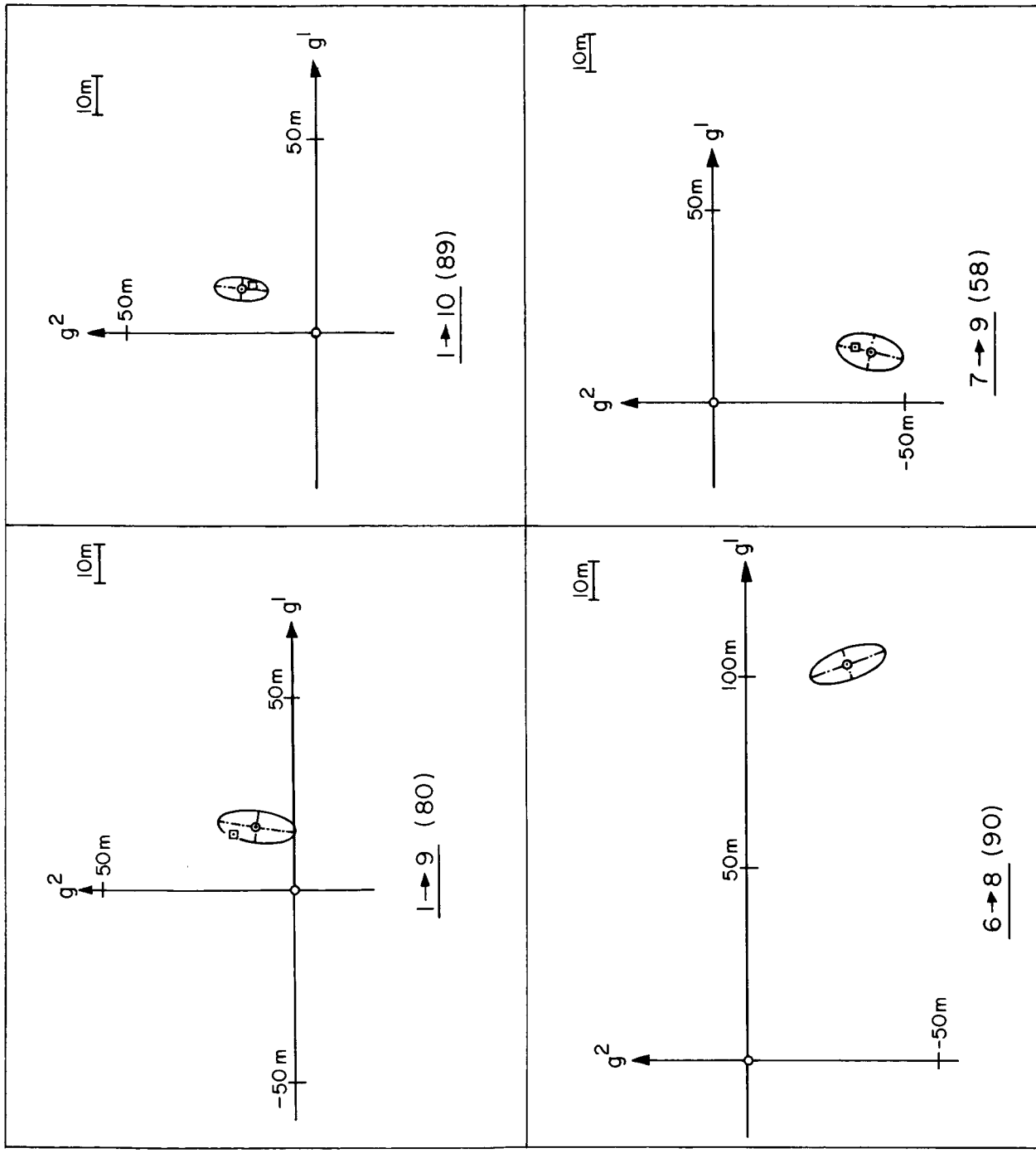

Figure 8b. Solutions and standard ellipses in meters.

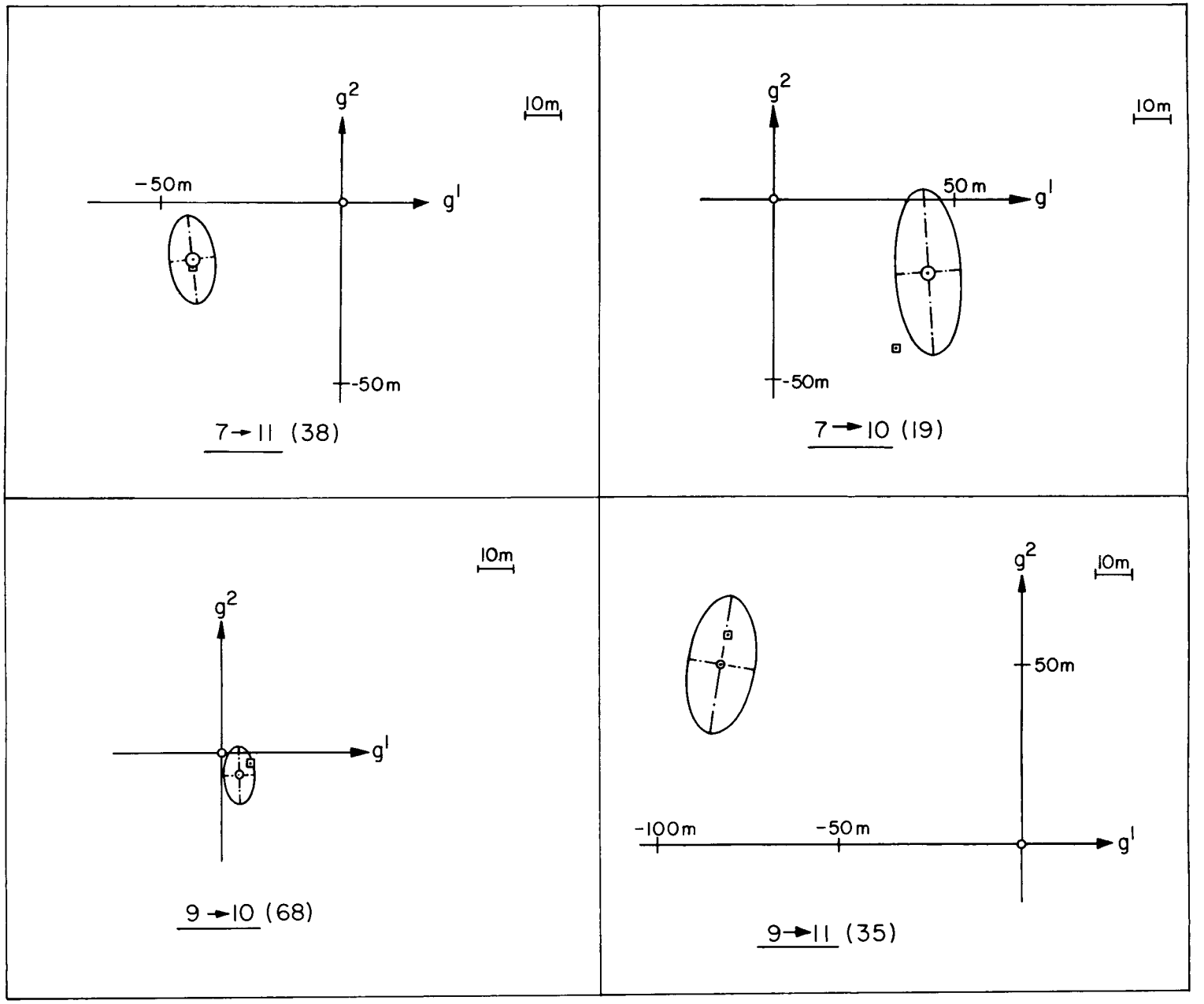

Figure 8c. Solutions and standard ellipses in meters.

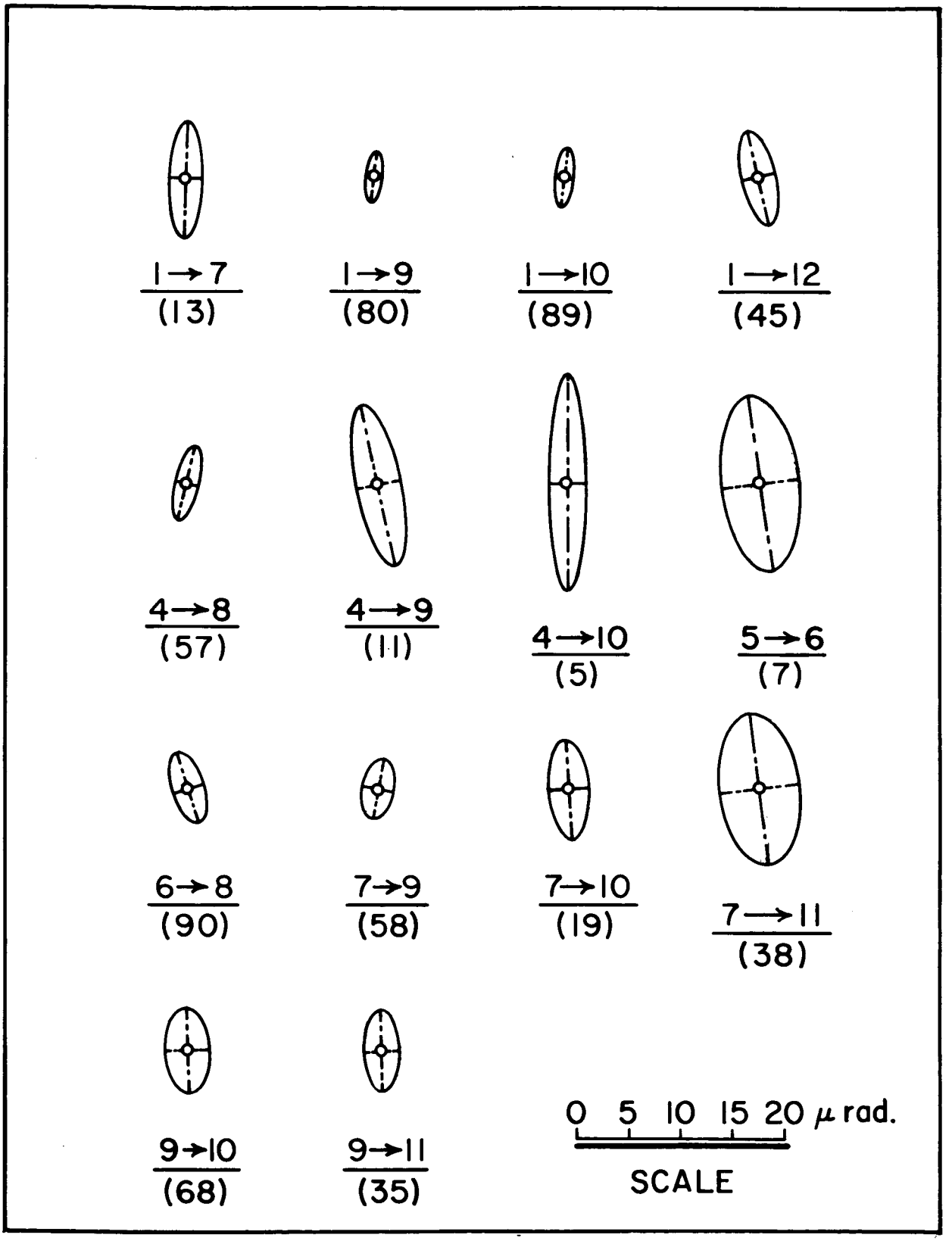

Figure 9. Standard ellipses in microradians.

and equation (5) can be approximated by means of a first-order Taylor expansion:

$$\frac{\partial D}{\partial \ell_{1,9}} \Delta\ell_{1,9} + \frac{\partial D}{\partial m_{1,9}} \Delta m_{1,9} + \frac{\partial D}{\partial n_{1,9}} \Delta n_{1,9} + \frac{\partial D}{\partial \ell_{1,10}} \Delta\ell_{1,10}$$

$$+ \frac{\partial D}{\partial m_{1,10}} \Delta m_{1,10} + \frac{\partial D}{\partial n_{1,10}} \Delta n_{1,10} + \frac{\partial D}{\partial \ell_{9,10}} \Delta\ell_{9,10} \tag{6}$$

$$+ \frac{\partial D}{\partial m_{9,10}} \Delta m_{9,10} + \frac{\partial D}{\partial n_{9,10}} \Delta n_{9,10} = - D ,$$

where D stands for the determinant

$$\begin{vmatrix} \ell_{1,9} & m_{1,9} & n_{1,9} \\ \ell_{1,10} & m_{1,10} & n_{1,10} \\ \ell_{9,10} & m_{9,10} & n_{9,10} \end{vmatrix} .$$

Equation (6) involves nine unknown quantities $\Delta\ell_{1,9}$, $\Delta m_{1,9}$, $\Delta n_{1,9}$ .....$\Delta n_{9,10}$. According to equation (4),

$$\begin{pmatrix} \Delta\ell_{1,9} \\ \Delta m_{1,9} \\ \Delta n_{1,9} \end{pmatrix} = G^T_{1,9} \begin{pmatrix} \Delta j^1_{1,9} \\ \Delta j^2_{1,9} \\ 0 \end{pmatrix} . \tag{7}$$

Here $\Delta j^1_{1,9}$ and $\Delta j^2_{1,9}$ denote corrections to the quantities $j^1_{1,9}$ and $j^2_{1,9}$, corresponding to corrections $\Delta\ell_{1,9}$, $\Delta m_{1,9}$ and $\Delta n_{1,9}$ to the direction cosines $\ell_{1,9}$, $m_{1,9}$ and $n_{1,9}$.

If equation (7) and similar expressions for the lines 9001-9010 and 9009-9010 are inserted into equation (6), the result is a relation of the

type

$$
\begin{aligned}
& A_{1,9}\,\Delta j^1_{1,9} + B_{1,9}\,\Delta j^2_{1,9} + \\
& + A_{1,10}\,\Delta j^1_{1,10} + B_{1,10}\,\Delta j^2_{1,10} + \\
& + A_{9,10}\,\Delta j^1_{9,10} + B_{9,10}\,\Delta j^2_{9,10} = -\,D\ ;
\end{aligned}
\tag{8}
$$

$A_{1,9}$, $B_{1,9}$, ...$B_{9,10}$ are coefficients depending on the shape and the orientation of the triangle.

At this stage of the work (see Table 1), six relations of equation (8) have to be considered, one for each of the triangles:

9001-9009-9010
9001-9007-9010
9001-9007-9009
9007-9009-9010
9007-9009-9011
9004-9009-9010 .

This means that the results j^1, j^2, as given in Table 1, are intermediate for the lines involved in the above mentioned triangles. Consequently, these results are put into a second step of least-squares adjustment (net adjustment), trying to find the most probable corrections Δj^1 and Δj^2 that satisfy equation (8) and the five similar relations for the other triangles simultaneously.

This net adjustment is relatively simple. Because, as mentioned in the previous paragraph, the axes of the standard ellipses are, practically speaking, oriented along the g^1- and g^2-axes, the correlation between j^1 and j^2 is negligible. Hence the input variance-covariance matrix for the net adjustment is diagonal. The results of this adjustment are summarized in Table 2; c^1, c^2, c^3 are the direction cosines of the lines connecting a pair of stations if the corrections Δj^1 and Δj^2 are taken into account, again using equation (7): Δj^3 is a correction to the initial distance λ_0 between the stations as given in Table 1, divided by this distance, or, which is the same, a correction to the local scale of the net. Corrections Δj^3 were computed under the supposition that the initial distance between stations 9001 and 9010 is not corrected.

Table 2. Results of net adjustment.

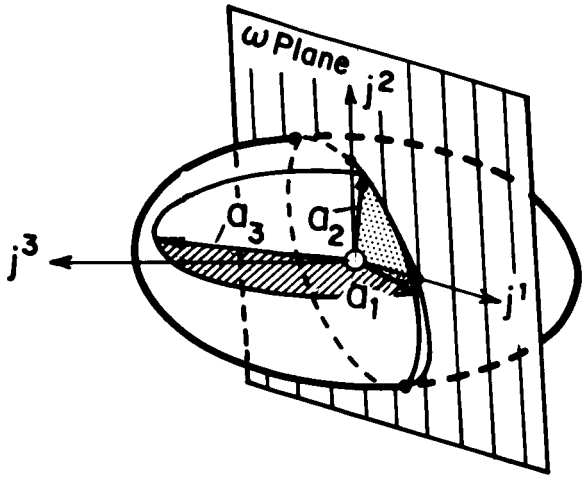

Lines	Solution			Standard ellipsoids											
	$j^1+\Delta j^1$	$j^2+\Delta j^2$	Δj^3	a_1	ℓ_1^1	ℓ_1^2	ℓ_1^3	a_2	ℓ_2^1	ℓ_2^2	ℓ_2^3	a_3	ℓ_3^1	ℓ_3^2	ℓ_3^3
	10^{-6}	10^{-6}	10^{-6}	10^{-6}				10^{-6}				10^{-6}			
1 → 7	+7.3 ±1.8	+7.2 ±1.8	+2.0 ±4.7	1.2	.93	-.25	.25	1.8	.23	.97	.13	4.9	.28	.06	-.96
1 → 9	+3.1 ±1.0	+3.6 ±1.9	+3.8 ±3.7	0.8	.99	-.01	.16	1.9	0	1.00	.08	3.8	.16	.08	-.98
1 → 10	+4.7 ±1.4	+7.2 ±3.0	0	1.4	-1.00	.04	0	3.0	.04	1.00	0	0	0	0	0
4 → 9	+10.6 ±2.6	-10.5 ±7.1	+8.8 ±15.9	2.2	.99	.07	.09	6.8	-.08	.99	.13	16.1	.08	.14	-.99
4 → 10	+7.6 ±3.0	-13.1 ±7.0	+7.1 ±15.7	2.3	-.99	.07	.12	6.7	.08	.99	.13	15.9	.11	-.14	.98
7 → 9	+4.4 ±1.7	-11.7 ±2.7	-2.1 ±7.5	1.6	-1.00	.08	.06	2.7	.08	1.00	.03	7.5	.06	-.03	1.00
7 → 10	+7.0 ±1.5	-8.5 ±2.2	+1.7 ±6.8	1.4	-.99	-.14	.06	2.2	-.13	.99	.05	6.8	.07	.04	1.00
7 → 11	-22.6 ±2.3	-9.8 ±4.1	-106.3 ±18.5	2.2	1.00	.01	.05	4.1	-.01	1.00	-.04	18.6	.05	-.04	-1.00
9 → 10	+3.9 ±1.9	-1.6 ±3.4	+10.2 ±8.6	1.8	-1.00	0	.09	3.4	.01	1.00	.06	8.6	.09	-.06	.99
9 → 11	-17.0 ±1.5	+12.2 ±2.2	-36.1 ±9.3	1.2	-.98	-.21	.07	2.2	-.20	.98	.07	9.4	.09	-.05	1.00

The semiaxes of standard-error ellipsoids specifying the relative accuracy of the positions of pairs of stations are a_1, a_2 and a_3. The orientation of the axes is defined by sets of direction cosines ℓ_i^1, ℓ_i^2, ℓ_i^3 (i = 1,2,3) with respect to the local g^1, g^2, g^3-system of reference. These relative standard ellipsoids are computed under the assumption that the distance between stations 9001 and 9010 is errorless. Stations 9001 and 9010 are selected for this purpose primarily because the distance between these stations is the most accurately known in the net. Results $j + \Delta j^1$, $j^2 + \Delta j^2$ have also been marked on Figures 8a,b,c (square-symbol).

The final values c^1, c^2, c^3 for the direction cosines of all fourteen lines appear in Table 3. For the lines 9001-9012, 9004-9008, 9005-9006 and 9006-9008 these values are simply the values of $\bar{c}^1$, $\bar{c}^2$, $\bar{c}^3$ as given in Table 1. For the other lines, being involved in the net adjustment, $\bar{c}^1$, $\bar{c}^2$, $\bar{c}^3$-values have been corrected, taking into account Δj^1 and Δj^2 according to equation (7).

A one-number directional accuracy s has been computed from $s = \sqrt{\frac{s_1^2 + s_2^2}{2}}$, where s_1 and s_2 respectively are the standard deviations in g^1 and g^2 directions. They have been taken from Table 2(columns 2 and 3). For th lines 9001-9012, 9004-9008, 9005-9006 and 9006-9008 s_1 and s_2 have been taken from Table 1.

Conclusion

From Table 1 it may be concluded that an accuracy (standard deviation) of better than 1" (4.8×10^{-6}) has been attained in most cases after the first step of least-squares adjustment (intersection of position lines). For these cases standard deviations in g^1-direction are between 2 and 3 times smaller than those in g^2-direction. In g^1-direction the standard deviations do not exceed 2×10^{-6}. For the lines 9001-9007, 9004-9009, 9004-9010, 9005-9006 and 9007-9011, standard deviations in the g^2-direction are larger than 1". In the case of line 9007-9011 this is caused by the overestimate obtained for σ, the standard deviations being based on these estimates. For the remaining four lines (9001-9007, 9004-9009, 9004-9010 and 9005-9006), the small numbers of synthetic observations (13, 11, 5 and 7, respectively) do not allow an accurate determination of the directions.

Table 3. Final directions of lines between stations.

Lines	Number of Position Lines ν	Direction Cosines			Directional Accuracy s
		c^1	c^2	c^3	
1 → 7*	13	+.5533004	-.1013382	-.8267946	18×10^{-7}
1 → 9*	80	+.8673548	-.1488306	-.4749159	15
1 → 10*	89	+.9654370	-.1669490	-.2001486	23
1 → 12	45	-.7952987	+.5590305	-.2344886	35
4 → 8	57	-.3267963	+.9374788	-.1197398	28
4 → 9*	11	-.4414253	-.8138814	-.3778105	53
4 → 10*	5	-.6274844	-.7668085	-.1351593	54
5 → 6	7	+.9152339	+.3880055	-.1086218	67
6 → 8	90	+.9110446	-.4121797	+.0102850	29
7 → 9*	58	+.0984450	-.0040824	+.9951341	23
7 → 10*	19	-.2021829	+.0424042	+.9784293	19
7 → 11*	38	+.1850028	+.4871381	-.8535048	33
9 → 10*	68	-.6310597	+.1066259	+.7683714	28
9 → 11*	35	+.0060288	+.1892109	-.9819180	19

* after net adjustment

The estimates $\hat{\sigma}$ are fairly consistent. From them, under the assumption that they are independent, the following 95% confidence limits for σ may be computed:

$$5.6 \times 10^{-6} < \sigma < 6.3 \times 10^{-6} ,$$

$$\text{or:} \quad 1''.15 < \sigma < 1''.29 .$$

Under some restriction (see p. 14), σ represents the accuracy of a single interpolated direction.

By the net adjustment only the directions of the lines 9001-9007 and 9007-9010 were influenced considerably (see Table 2). As was to be expected, the ratio between the standard deviations in g^2- and g^1-directions decreased in the average. Standard deviations after the net adjustment are based on an estimate 5.5×10^{-6} for σ obtained from the residuals. This estimate does not seem to be in disagreement with the estimate from the adjustment of position lines. After the net adjustment, standard deviations smaller than 1" are also attained for the lines 9001-9007 and 9007-9011. The decrease of the standard deviations for line 9007-9011, however, is mainly brought about by the smaller estimate for σ. The corrections Δj^3 seem to be significant only for the lines 9007-9011 and 9009-9011.

Roughly speaking, the standard ellipsoids are elongated along the g^3-axes. This suggests a poor propagation of scale resulting from the geometry of the adjusted part of the Baker-Nunn net. A more favorable propagation of scale might result if the length of one of the other lines could be measured with sufficient accuracy or if accurate direct-range measurement to the satellite becomes feasible.

The present results indicate that the application of the method of synthetic simultaneous observations leads to fixed-Earth directions for the lines connecting the Baker-Nunn stations accurate to better than 1", or 5×10^{-6} (standard deviation). To attain this accuracy between 20 and 50 pairs of synthetic observations are required. These numbers of observations are sufficient to provide azimuth-corrections (g^1-direction) accurate to 2×10^{-6}.

The Smithsonian Astrophysical Observatory is continuing the simultaneous observation program. Using the observations from cooperating precise optical tracking stations located near Oslo (Norway), Cold Lake (Canada) and on Johnston Island in the Pacific additional lines will be oriented in Europe, on the North-American continent and across the Atlantic and Pacific Oceans. If stations are established according to the recommendations of COSPAR, an almost world-wide three-dimensional trianglulation net can be built up.

Acknowledgments

The IBM-7094 computer-programs for the interpolation, reduction and correction of the observations were written by Mr. William L. Joughin. The adjustment programs were written by Mrs. Susan R. Brown and Mrs. Barbara M. Fardon.

References

VEIS, G.

1963a. Precise aspects of terrestrial and celestial reference frames. Smithsonian Astrophysical Obs., Special Report No. 123, 16 pp. Also in "The Use of Artificial Satellites for Geodesy," North-Holland Publishing Company, Amsterdam, pp. 201-216.

1963b. The determination of absolute directions in space with artificial satellites. Smithsonian Astrophysical Obs., Special Report No. 133, 24 pp. Also in Bulletin Géodésique No. 72, pp. 147-166.

NOTICE

This series of Special Reports was instituted under the supervision of Dr. F. L. Whipple, Director of the Astrophysical Observatory of the Smithsonian Institution, shortly after the launching of the first artificial earth satellite on October 4, 1957. Contributions usually come from the Staff of the Observatory.

First issued to ensure the immediate dissemination of data for satellite tracking, the Reports have continued to provide a rapid distribution of catalogs of satellite observations, orbital information, and preliminary results of data analysis prior to formal publication in the appropriate journals. The Reports are also used extensively for the rapid publication of preliminary or special results in other fields of astrophysics.

The Reports are regularly distributed to all institutions participating in the U. S. space research program and to individual scientists who request them from the Publications Division, Distribution Section, Smithsonian Astrophysical Observatory, Cambridge, Massachusetts 02138.