M-77-65-1 • JUNE 1965

M-77-65-1

JUNCTURE STRESS FIELDS IN MULTICELLULAR SHELL STRUCTURES

VOL. II

STRESSES AND DEFORMATIONS OF FIXED-EDGE SEGMENTAL CYLINTRICAL SHELLS

by

E. Y. W. TSUI

F. A. BROGAN

P. STERN

FACILITY FORM 602

N66-13415 (ACCESSION NUMBER)

(THRU)

119 (PAGES)

1 (CODE)

CR 67730 (NASA CR OR TMX OR AD NUMBER)

32 (CATEGORY)

GPO PRICE $

CFSTI PRICE(S) $

Hard copy (HC) 4.00

Microfiche (MF) .75

ff 653 July 65

June 1965 M-77-65-1

Technical Report

JUNCTURE STRESS FIELDS IN MULTICELLULAR SHELL STRUCTURES

Final Report

Nine Volumes

Vol. II Stresses and Deformations of Fixed-Edge Segmental Cylindrical Shells

by

E. Y. W. Tsui
F. A. Brogan
P. Stern

Contract NAS 8-11480 to National Aeronautics and Space Administration
George C. Marshall Space Flight Center, Huntsville, Alabama

LOCKHEED MISSILES & SPACE COMPANY

FOREWORD

This report is the result of a study on the numerical analysis of stresses and deformations of fixed-edge orthotropic and isotropic segmental cylindrical shells under uniform and hydrostatic pressures as well as linear thermal gradient across the thickness of the shell. Work on this study was performed by staff members of Lockheed Missiles & Space Company in cooperation with the George C. Marshall Space Flight Center of the National Aeronautics and Space Administration under Contract NAS 8-11480. Contract technical representative was H. Coldwater.

This volume is the second of a nine-volume final report of studies conducted by the department of Solid Mechanics, Aerospace Sciences Laboratory, Lockheed Missiles & Space Company. Project Manager was K. J. Forsberg; E. Y. W. Tsui was Technical Director for the work.

The nine volumes of the final report have the following titles:

Vol. I	Numerical Methods of Solving Large Matrices
Vol. II	Stresses and Deformations of Fixed-Edge Segmental Cylindrical Shells
Vol. III	Stresses and Deformations of Fixed-Edge Segmental Conical Shells
Vol. IV	Stresses and Deformations of Fixed-Edge Segmental Spherical Shells
Vol. V	Influence Coefficients of Segmental Shells
Vol. VI	Analysis of Multicellular Propellant Pressure Vessels by the Stiffness Method
Vol. VII	Buckling Analysis of Segmental Orthotropic Cylinders under Uniform Stress Distribution
Vol. VIII	Buckling Analysis of Segmental Orthotropic Cylinders under Non-uniform Stress Distribution
Vol. IX	Summary of Results and Recommendations

SUMMARY

13415

This volume presents a set of basic equations for orthotropic thin elastic cylindrical shells and a digital program for the analysis of static response of segmental cylinders with fixed edges under the following loading conditions:

- Linearly varying pressure
- Uniform pressure
- Linear thermal gradient through the thickness of shell

The problem is solved numerically by means of finite-difference technique, using a direct method of solving a large system of simultaneous equations. Also, a numerical example showing the stresses and deformations of a segmental orthotropic cylinder under uniform pressure is presented. Author

CONTENTS

Section		Page
	FOREWORD	iii
	SUMMARY	v
	NOTATIONS	vi
1	INTRODUCTION	1
2	FORMULATION OF THE PROBLEM	5
	2.1 Analytical Formulation	5
	2.2 Boundary Conditions	14
	2.3 Stresses in Skin and Stiffeners	17
3	NUMERICAL ANALYSIS	19
	3.1 Approximation of Derivatives	20
	3.2 Difference Equations	22
	3.3 Grading of Mesh	26
4	DIGITAL PROGRAM	28
	4.1 General Description	28
	4.2 Numerical Example	29
	4.3 Listing of the Program	47

NOTATION

a_i , b_i , c_i , A , B , C , $D_{()}$, $E_{()}$, $M_{()}$, $N_{()}$, $\overline{Q}_{()}$, $S_{()}$, u , v , w , x , $Z_{()}$, θ , ρ , κ	nondimensional parameters defined in text
b	spacing of stiffeners (stringers and ribs)
c	eccentricity of stiffener with respect to middle-surface of shell
d	depth of stiffener
D	flexural rigidity of shell $= Eh^3/12(1 - \nu^2)$
E	modulus of elasticity
F_i	boundary force at Station i
F^f	boundary forces of fixed-edge shell due to applied forces or thermal gradients
G	shear modulus
h	thickness of shell
$\overline{h}$, $\overline{k}$	mess spacings in x- and θ- coordinate directions
m , n	number of columns and rows of the mesh
i , j	dummy subscripts
k , k_{ij}	stiffness influence coefficients
L	length of cylindrical segment
$\hat{M}_{()}$, $\hat{N}_{()}$	moments and stress resultants
$P_{()}$	surface or body forces
$Q_{()}$	transverse shears
R	radius

R_i	concentrated forces at corners of shell boundaries in the z-direction
t	width of stiffener
T	change of temperature
$\hat{u}$, $\hat{v}$, $\hat{w}$	displacement components in directions $\hat{x}$, $\hat{\theta}$, and $\hat{z}$
$\hat{x}$, $\hat{\theta}$, $\hat{z}$	cylindrical coordinates
$\hat{\theta}_c$	angle subtending one-half width of cylindrical segment
ζ , η	orthogonal coordinates along boundaries of shell
δ_i	boundary deformations (displacements or rotations) at Station i
$\epsilon_{(\,)}$, $\gamma_{(\,)}$	direct and shear strains
$\hat{\chi}_{(\,)}$	changes of curvature or torsion of middle-surface
ν	Poisson's ratio
$\omega_{(\,)}$	rotations of the normal at the middle-surface
$(\,)_{,\hat{x}}$	$\frac{\partial(\,)}{\partial\hat{x}}$
$(\,)_i^j$	functions at a discrete point i , j where i , j implies the $\hat{x}$- and $\hat{\theta}$- directions respectively
ϵ^T	thermal strain = coefficients of linear expansion times the change of temperature, T
Φ	rotation in the middle-surface around the normal

Additional notations and symbols are defined in the text.

Section 1
INTRODUCTION

As a result of an investigation of juncture stress fields peculiar to the multicellular pressure vessels (Fig. 1), a theory for the prediction of the membrane and bending stresses and the corresponding deformations for such shell structures was formulated.*

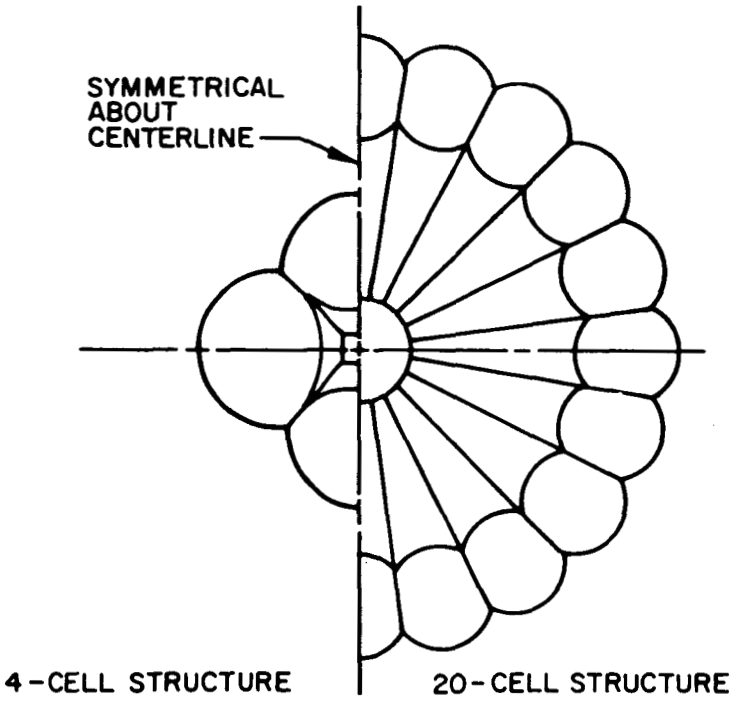

Fig. 1 Multicellular Shell Structure

*"Investigation of Juncture Stress Fields in Multicellular Shell Structures," by E. Y. W. Tsui, F. A. Brogan, J. M. Massard, P. Stern, and C. E. Stuhlman, Technical Report M-03-63-1, Lockheed Missiles & Space Company, Sunnyvale, Calif., Feb 1964 – NASA CR-61050.

Due to the fact that analytic solutions are still lacking, it was decided to solve the problem numerically by means of finite-difference technique. To ensure the feasibility of such a numerical solution, a direct method of solving large matrices with a high-speed digital computer was also developed.

According to the previous work, if the stiffness or displacement method is used, the total forces and hence the corresponding stresses along the juncture of the shell segments (Fig. 2) may be expressed concisely in the following matrix form

$$F = k\delta + F^f \tag{1.1}$$

where k is the stiffness matrix, δ are the deformations, and F^f are the fixed-end forces due to applied loads or thermal gradients. In view of this situation, it is logical to solve the problem systematically by the established general procedure of analysis already described.* This procedure may be stated briefly as follows:

1. Determination of the fixed-end forces, F^f, along the boundary as well as stresses and deformations in the interior of shell segments due to loads
2. Determination of the influence coefficients, k_{ij}, along the boundaries of shell segments, i.e., the induced forces at points i due to unit deformations $(\delta = 1)$ at points j
3. Determination of the actual deformations, δ, along the shell boundaries; this requires the satisfaction of both compatibility and equilibrium conditions at the junctures of the structure

Once all the work involved in these three steps is completed, the total stresses and deformations in the specific discrete interior locations may be obtained.

---

*"Investigation of Juncture Stress Fields in Multicellular Shell Structures," by E. Y. W. Tsui, F. A. Brogan, J. M. Massard, P. Stern, and C. E. Stuhlman, Technical Report M-03-63-1, Lockheed Missiles & Space Company, Sunnyvale, Calif., Feb 1964 – NASA CR-61050.

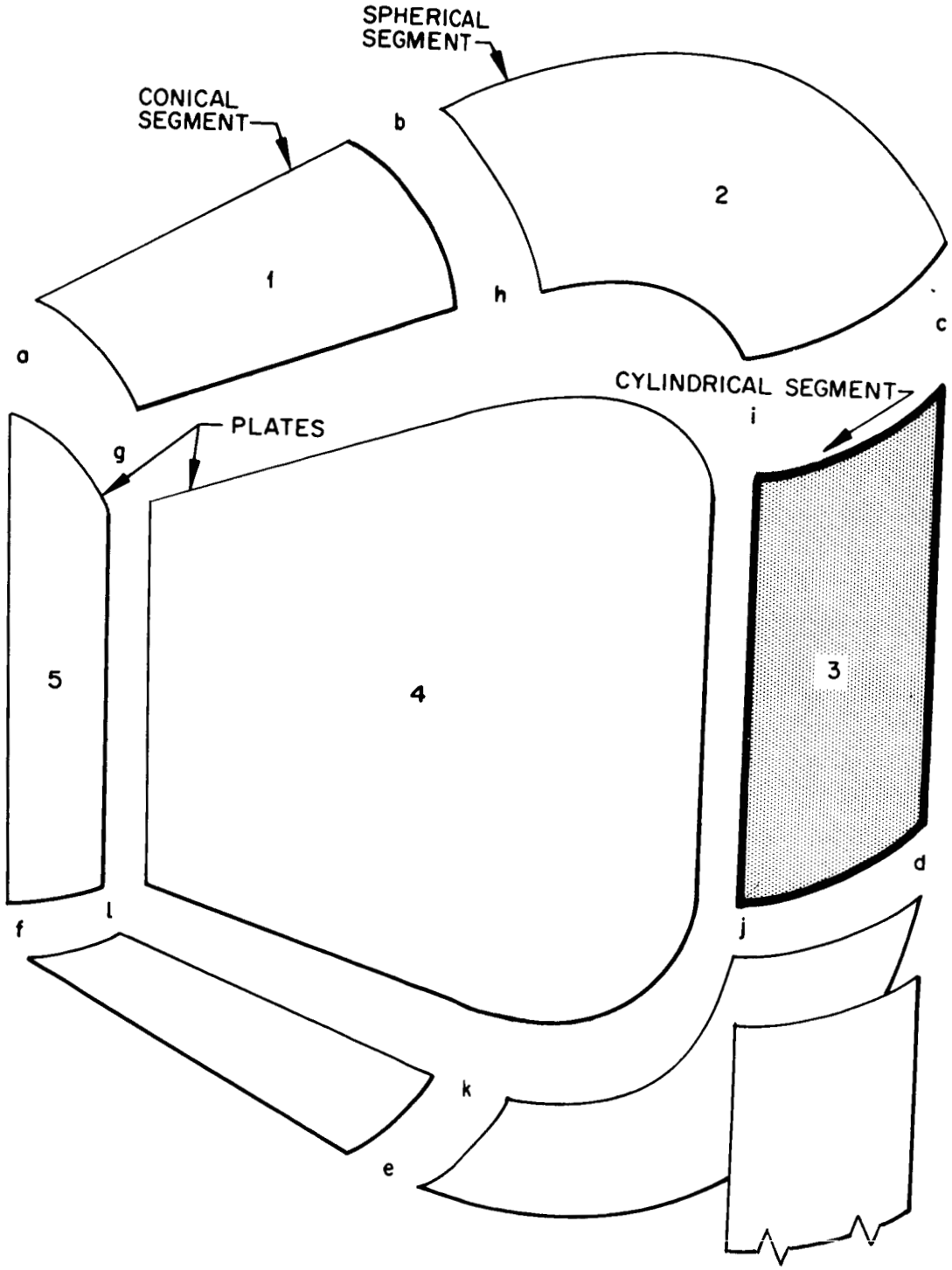

Fig. 2 Basic Shell Elements of Multicellular Structure

This volume presents results of the work involved in Step 1 only and covers the following items:

- Nondimensional formulation of the problem
- Detailed description of a workable digital program for the generation of solutions
- Tabulation of stresses and deformations of an orthotropic segmental cylinder with fixed edge under uniform internal pressure

Section 2
FORMULATION OF PROBLEM

The necessary analytical expressions for an anisotropic cylinder have already been given.* In order that this report be complete in the sense of equations, all the required equations specialized to that of an anisotropic cylinder are presented. Further, boundary conditions for a boundary which coincides with coordinate axes are given. Finally, the governing equations are written in difference form and the ordering of the equations are given so that they can be solved by the "direct method" described in Vol. I.

2.1 ANALYTICAL FORMULATION

The geometry of the cylindrical panel under consideration is shown in Fig. 3. Symmetry is noted in the θ-direction. This condition does not restrict the equation system which follows; it only affects the method of solution.

Anisotropy of the cylinder is due to ribs and stringers of the same size which are equally spaced in both directions as shown in Fig. 4. If the spacing b between ribs and stringers is large, it is necessary to analyze the cylinder as if it were composed of shell panels and stiffeners. However, when the spacing becomes small the structure assumes an anisotropic shell. Figure 5 shows further details of an element of rib and stringer geometry.

To obtain a formulation which will yield solutions covering a wide range of shell parameters, all geometrical and dependent variables have been nondimensionalized and normalized in the following manner:

---

*"Investigation of Juncture Stress Fields in Multicellular Shell Structures," by E. Y. W. Tsui, F. A. Brogan, J. M. Massard, P. Stern, and C. E. Stuhlman, Technical Report M-03-63-1, Lockheed Missiles & Space Company, Sunnyvale, Calif., Feb 1964 – NASA CR-61050.

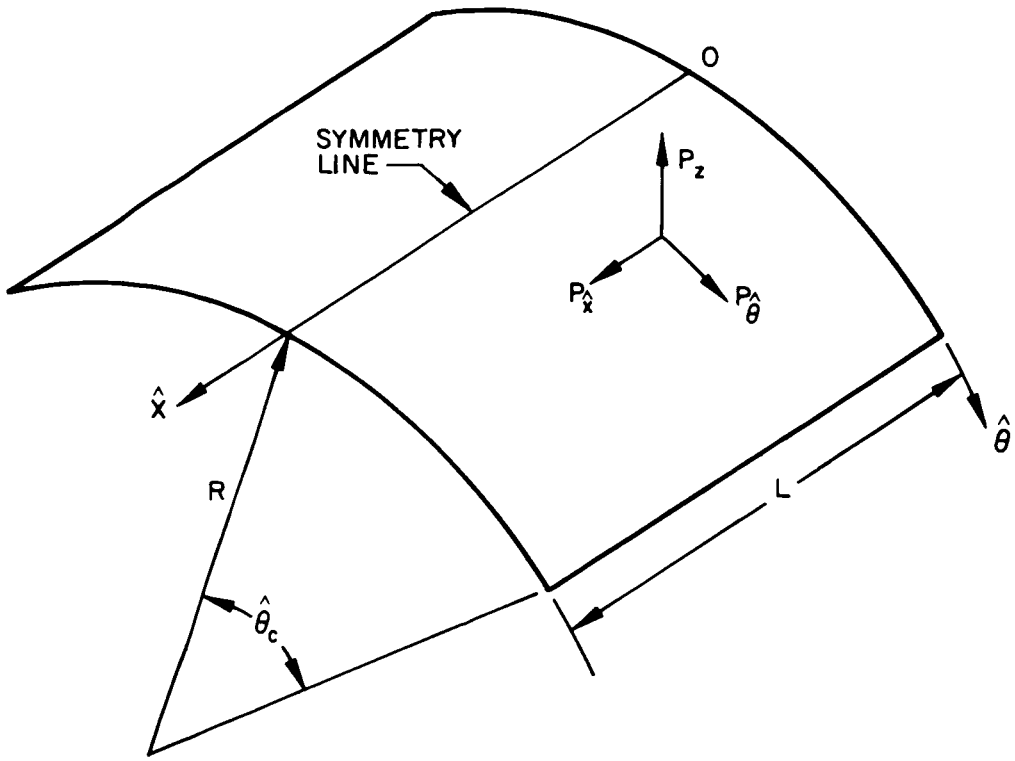

Fig. 3 Geometry of Cylindrical Panel

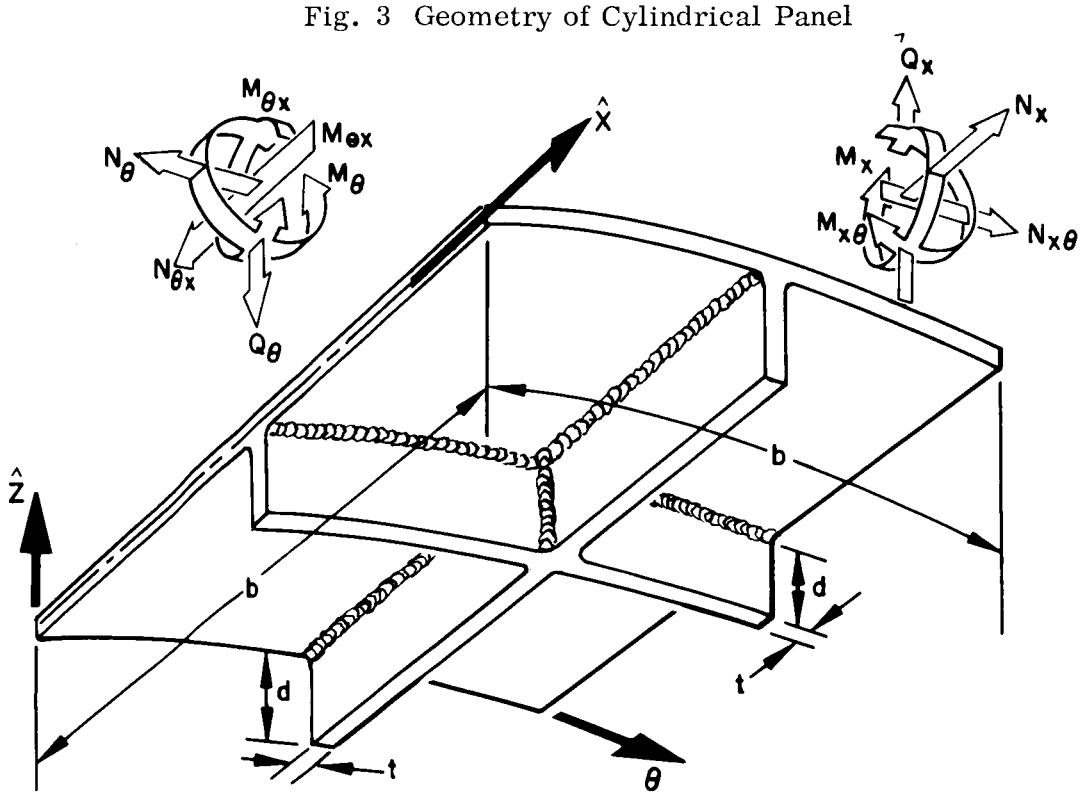

Fig. 4 Element of Stiffened Shell

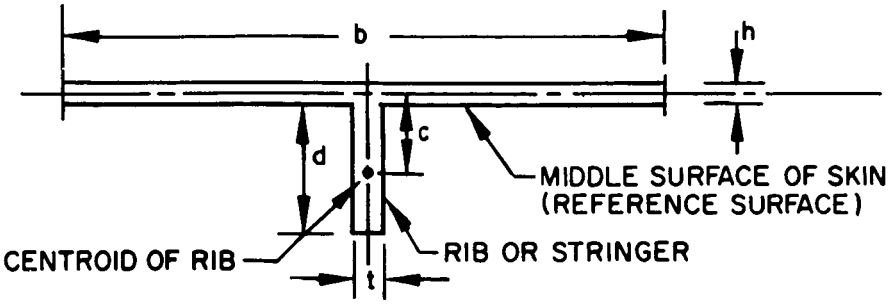

Fig. 5 Rib and Stringer Geometry

For the coordinate system

$$x = \hat{x}/L \tag{2.1a}$$

$$\theta = \hat{\theta}/\theta_c \tag{2.1b}$$

$$z = \hat{z}/R \tag{2.1c}$$

$$\rho = R\theta_c/L \tag{2.1d}$$

$$\bar{h} = x/n \tag{2.1e}$$

$$\bar{k} = \theta/m \tag{2.1f}$$

For the dependent variables

$$u = \hat{u}/R \tag{2.2a}$$

$$v = \hat{v}/R \tag{2.2b}$$

$$w = \hat{w}/R \tag{2.2c}$$

$$N = \hat{N}/Eh \tag{2.2d}$$

$$M = \hat{M}/EhR \tag{2.2e}$$

$$\chi = R\hat{\chi} \tag{2.2f}$$

Consequently, the basic shell equations can be written as shown in Secs. 2.1.1 through 2.1.4.

2.1.1 Rotation-Displacement Relations

Positive displacements and rotations of the reference surface (Fig. 6) are shown in Fig. 7 and are related by the equations:

$$\omega_x = -(\rho/\theta_c)\, w,_x \tag{2.3a}$$

$$\omega_\theta = v - (1/\theta_c)\, w,_x \tag{2.3b}$$

$$\Phi = [(\rho/\theta_c)\, v,_x - (1/\theta_c)\, u,_\theta]/2 \tag{2.3c}$$

2.1.2 Strain-Displacement Relations

The strains of the reference surface are related to displacements by

$$\bar{\epsilon}_x = (\rho/\theta_c)\, u,_x \tag{2.4a}$$

$$\bar{\epsilon}_\theta = 1/\theta_c\, v,_\theta + w \tag{2.4b}$$

$$\bar{\gamma} = (1/\theta_c)\, u,_x + (\rho/\theta_c)\, v,_x \tag{2.4c}$$

and the changes of curvature and torsion are

$$\chi_x = -(\rho/\theta_c)^2\, w,_{xx} \tag{2.5a}$$

$$\chi_\theta = (1/\theta_c)\, v,_\theta - (1/\theta_c)^2\, w,_{\theta\theta} \tag{2.5b}$$

$$\chi_{x\theta} = (\rho/\theta_c)\, v,_x - \left(\rho/\theta_c^2\right) w,_{x\theta} \tag{2.5c}$$

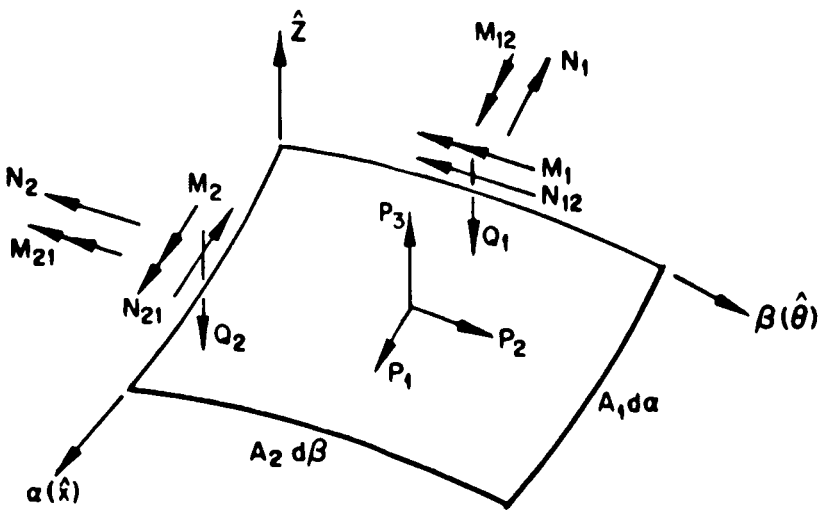

Fig. 6 Stress Resultants, Moments and Loads

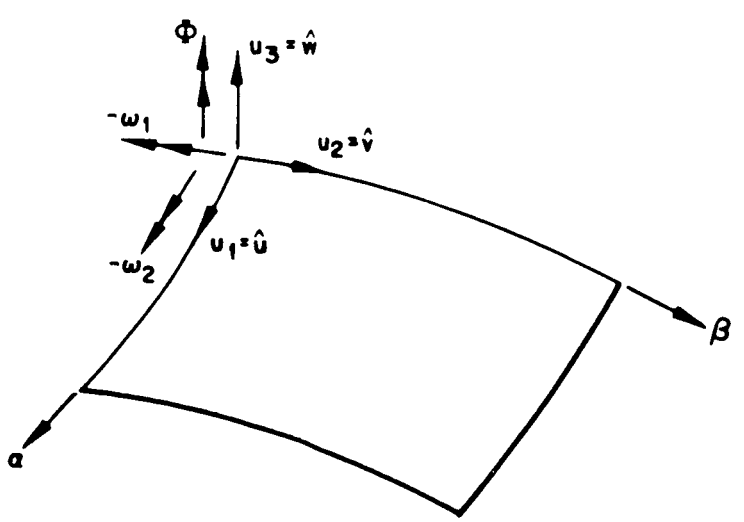

Fig. 7 Displacements and Rotations

The strains at a distance z from the reference surface are given by

$$\epsilon_x = \bar{\epsilon}_x + z\chi_x \tag{2.6a}$$

$$\epsilon_\theta = \bar{\epsilon}_\theta + z\chi_\theta \tag{2.6b}$$

$$\gamma_{x\theta} = \bar{\gamma}_{x\theta} + 2z\chi_{x\theta} \tag{2.6c}$$

2.1.3 Constitutive Relations

Positive stress resultants are shown in Fig. 6. These stress resultants are related to strains by the equations

$$N_x = E_x \bar{\epsilon}_x + E_\nu \bar{\epsilon}_\theta - S_c \chi_x + N^T \tag{2.7a}$$

$$N_\theta = E_\nu \bar{\epsilon}_x + E_\theta \bar{\epsilon}_\theta - S_\theta \chi_\theta + N^T \tag{2.7b}$$

$$N_{\theta x} = E_{\theta x} \bar{\gamma} \tag{2.7c}$$

$$N_{x\theta} = E_{\theta x} \bar{\gamma} + D_{\theta x}(\chi_{x\theta}) \tag{2.7d}$$

$$M_x = D_x(\chi_x) + D_\nu(\chi_\theta) - S_c \bar{\epsilon}_x + M^T \tag{2.7e}$$

$$M_\theta = D_x(\chi_x) + D_\theta(\chi_\theta) - S_c \bar{\epsilon}_\theta + M^T \tag{2.7f}$$

$$M_{x\theta} = M_{\theta x} = D_{\theta x}(\chi_{x\theta}) \tag{2.7g}$$

$$Q_x = (\rho/\theta_c) \left[D_x(\chi_x)_{,x} + D_\nu(\chi_\theta)_{,x} - S_c \bar{\epsilon}_{x,x} + M^T_{,x}\right] + (D_{\theta x}/\theta_c)(R\chi_{x\theta})_{,\theta} \tag{2.7h}$$

$$Q_\theta = (\rho/\theta_c) D_{\theta x}(\chi_{x\theta})_{,x} + (1/\theta_c) \left[D_x(\chi_x)_{,\theta} + D_\theta(\chi_\theta)_{,\theta} - S_c \bar{\epsilon}_{\theta,\theta} + M^T_{,\theta}\right] \tag{2.7i}$$

where

$$E_x = E_\theta = [1 + (t/h)(d/b)(1 - \nu^2)] / (1 - \nu^2)$$

$$E_\nu = \nu/(1 - \nu^2)$$

$$E_{\theta x} = 1/2(1 + \nu)$$

$$S_c = (c/R)(t/h)(d/b)$$

$$D_x = D_\theta = \kappa \{1 + (t/h)(d/b) [(d/h)^2 + 12(c/h)^2] (1 - \nu^2)\} / (1 - \nu^2)$$

$$D_\nu = \nu\kappa/(1 - \nu^2)$$

$$D_{\theta x} = \kappa \{1 + 2 (t/h)^3 (d/b)\} / (1 + \nu)$$

$$N^T = - [1/(1 - \nu) h] \left[\int_{-h/2}^{h/2} \alpha T dz + (t/b) \int_{-(d+h/2)}^{-h/2} \alpha T dz \right]$$

$$M^T = - [1/(1 - \nu) hR] \left[\int_{-h/2}^{h/2} \alpha T z dz + (t/b) \int_{-(d+h/2)}^{-h/2} \alpha T z dz \right]$$

$$\kappa = \frac{h^2}{12 R^2}$$

2.1.4 Governing Differential Equations

The governing differential equations for an anisotropic cylinder in terms of the displacement components u , v , and w are given by

$$a_1 u,_{xx} + a_2 u,_{\theta\theta} + a_3 v,_{x\theta} + a_4 w,_{xxx} + a_5 w,_x = A \qquad (2.8a)$$

$$b_1 u,_{x\theta} + b_2 v,_{xx} + b_3 v,_{\theta\theta} + b_4 w,_{xx\theta} + b_5 w,_{\theta\theta\theta} + b_6 w,_{\theta} = B \qquad (2.8b)$$

$$c_1 u,_{xxx} + c_2 u,_{x} + c_3 v,_{xx\theta} + c_4 v,_{\theta\theta\theta} + c_5 v,_{\theta} + c_6 w,_{xxxx} + c_7 w,_{xx\theta\theta} + c_8 w,_{\theta\theta\theta\theta}$$
$$+ c_9 w,_{\theta\theta} + c_{10} w = C \qquad (2.8c)$$

where

$$a_1 = (\rho/\theta_c)^2 E_x \qquad b_1 = a_3$$

$$a_2 = E_{\theta x}/\theta_c^2 \qquad b_2 = (\rho/\theta_c)^2 (E_{\theta x} + 2D_{\theta x})$$

$$a_3 = \left(\rho/\theta_c^2\right)(E_\nu + E_{\theta x}) \qquad b_3 = \left(1/\theta_c^2\right)(E_\theta + D_\theta - 2S_c)$$

$$a_4 = S_c(\rho/\theta_c)^3 \qquad b_4 = -\left(\rho^2/\theta_c^3\right)(D_\nu + 2D_{\theta x})$$

$$a_5 = (\rho/\theta_c) E_\nu \qquad b_5 = -\left(1/\theta_c^3\right)(D_\theta - S_c)$$

$$b_6 = (1/\theta_c)(E_\theta - S_c)$$

$$c_1 = (\rho/\theta_c)^3 S_c \qquad c_6 = (\rho/\theta_c)^4 D_x$$

$$c_2 = a_5 \qquad c_7 = 2\left(\rho^2/\theta_c^4\right)(D_\nu + D_{\theta x})$$

$$c_3 = b_4 \qquad c_8 = \left(1/\theta_c^4\right) D_\theta$$

$$c_4 = b_5 \qquad c_9 = \left(2/\theta_c^2\right) S_c$$

$$c_5 = b_6 \qquad c_{10} = E_\theta$$

$$A = -(p_x R/Eh) - (p/\theta_c)N,_x^T$$

$$B = -(p_\theta R/Eh) - (1/\theta_c)N,_\theta^T - (1/\theta_c)M,_\theta^T$$

$$C = (p_z R/Eh) - N^T + (p/\theta_c)^2 M,_{xx}^T + (1/\theta_c)^2 M,_{\theta\theta}^T$$

The right-hand vectors of Eq. (2.8) for three types of loading and the corresponding dimensional displacement components are given below:

- Uniform normal pressure

$$A = 0$$

$$B = 0$$

$$C = p_z R/Eh = 1.0$$

$$\hat{u} = up_z R^2/Eh$$

$$\hat{v} = vp_z R^2/Eh$$

$$\hat{w} = wp_z R^2/Eh$$

- Linearly varying pressure

$$A = 0$$

$$B = 0$$

$$C = (R/Eh)(p_\theta + p_x)$$

$$\hat{u} = uR^2/Eh$$

$$\hat{v} = vR^2/Eh$$

$$\hat{w} = wR^2/Eh$$

- Linear temperature gradient

$$A = 0$$

$$B = 0$$

$$C = \alpha\left[\frac{T_1}{1-\nu} + \left(\frac{t}{h}\right)\left(\frac{d}{b}\right)(T_i - T_o)\right]$$

where

α = coefficient of thermal expansion

T_o = ambient temperature at which the structure is stress free

$T_1 = \frac{T_e + T_i}{2} - T_o$

T_e, T_i = external and internal temperatures of shell skin

$\hat{u} = uR$

$\hat{v} = vR$

$\hat{w} = wR$

It should be noted that Eqs. (2.7) and (2.8) reduce to the case of isotropic shells if $d = t = 0$.

2.2 BOUNDARY CONDITIONS

The boundary conditions have already been given* for an arbitrary shell with a smooth boundary curve. These boundary conditions are in terms of displacements and stress resultants. If the boundary curve is not smooth it is possible that a concentrated load must be applied at the slope discontinuity. This concentrated load can be established by use of the work done by the boundary forces,

$$W^b = \int_c \left[\left(N_\eta + \frac{M_{\zeta\eta}}{R} \right) u_\eta + \left(N_\zeta - \frac{M_{\zeta\eta}}{R_\eta} \right) u_\zeta + Q_3 w + M_\zeta \omega_\eta - \frac{M_{\zeta\eta}}{A_\eta} \frac{\partial w}{\partial \eta} \right] d\zeta \tag{2.9}$$

*"Investigation of Juncture Stress Fields in Multicellular Shell Structures," by E. Y. W. Tsui, F. A. Brogan, J. M. Massard, P. Stern, and C. E. Stuhlman, Technical Report M-03-63-1, Lockheed Missiles & Space Company, Sunnyvale, Calif., Feb 1964 – NASA CR-61050.

The last term in equation can be integrated by parts to yield

$$W^b = \int_c \left[\left(N_\eta + \frac{M_{\zeta\eta}}{R} \right) u_\eta + \left(N_\zeta - \frac{M_{\zeta\eta}}{R_\eta} \right) u_\zeta + \left(Q_3 + \frac{1}{A_\eta} \frac{\partial M_{\zeta\eta}}{\partial \eta} \right) w \right.$$

$$\left. + M_\zeta \omega_\eta \right] d\zeta - \sum_{i=1}^{K} R_i w(i) \qquad (2.10)$$

where

$$R_i = [M_{\zeta\eta}(\eta_2) - M_{\zeta\eta}(\eta_1)]_i$$

Thus R_i is a concentrated load in the direction of z at which the boundary curve has a discontinuous slope.

At this point a specific boundary curve is considered. This is shown in Fig. 8 as $\overline{abcd}$. The boundary forces for various sections of this boundary curve are given

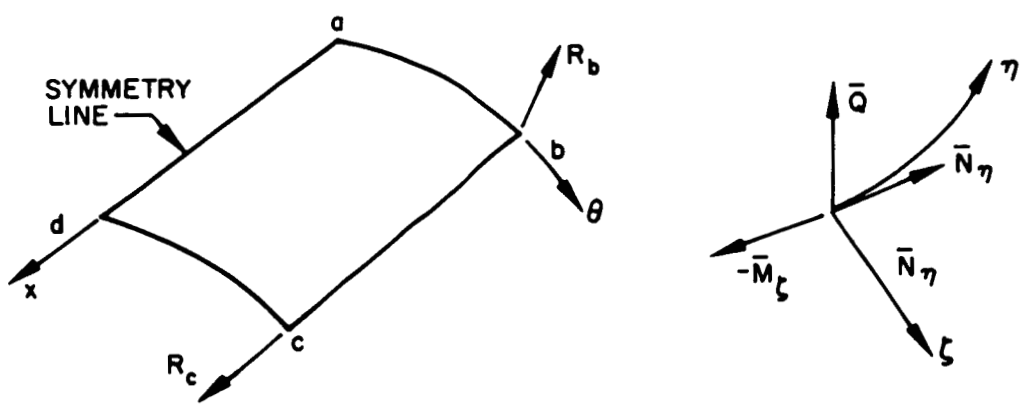

Fig. 8 Boundary Curve and Forces

by the equations:

$\overline{ab}$:

$$\overline{N}_\eta = N_{x\theta} + \frac{1}{R} M_{x\theta}$$

$$\overline{N}_\zeta = N_x$$

$$\overline{Q} = - \left[Q_x + \frac{1}{R} M_{x\theta,\theta}\right]$$

$$\overline{M}_\zeta = M_x$$

$$R_b = 2 M_{x\theta}$$

$\overline{bc}$:

$$\overline{N}_\eta = - N_{\theta x}$$

$$\overline{N}_\zeta = N_\theta$$

$$\overline{Q} = [Q_\theta + M_{\theta x,x}]$$

$$\overline{M}_\zeta = M_\theta$$

$\overline{cd}$:

$$\overline{N}_\eta = N_{x\theta} + \frac{1}{R} M_{x\theta}$$

$$\overline{N}_\zeta = N_x$$

$$\overline{Q} = Q_x + \frac{1}{R} M_{x\theta,\theta}$$

$$\overline{M}_\zeta = M_x$$

At the corners b and c there is a possible reaction load given by

$$R_i = 2 M_{x\theta}(b;c)$$

For a fixed-edge cylinder, the displacement components are all zero. Thus, for the boundary curve $\overline{abcd}$, the required boundary conditions are

$$\overline{ab}: \quad u \equiv v \equiv w \equiv \frac{\partial w}{\partial x} \equiv 0$$

$$\overline{bc}: \quad u \equiv v \equiv w \equiv \frac{\partial w}{\partial \theta} \equiv 0$$

$$\overline{cd}: \quad u \equiv v \equiv w \equiv \frac{\partial w}{\partial x} \equiv 0$$

Along $\overline{ad}$ the symmetry conditions are

$$v = 0$$

$$\omega_\theta = 0$$

$$N_{\theta x} = 0 \quad ; \quad M_{\theta x} = 0$$

$$Q_\theta = 0$$

2.3 STRESSES IN SKIN AND STIFFENERS

Once the stress resultants and couples are known, the corresponding maximum and minimum stresses of an isotropic shell can be computed by the relations

$$\sigma_x = \frac{1}{h} \hat{N}_x \pm \frac{6}{h^2} \hat{M}_x \tag{2.11}$$

$$\sigma_\theta = \frac{1}{h} \hat{N}_\theta \pm \frac{6}{h^2} \hat{M}_\theta \tag{2.12}$$

This is based on the assumption of a linear stress variation through the thickness given as

$$\sigma_i = \bar{\sigma}_i + z\sigma_i^b \tag{2.13}$$

where $\bar{\sigma}_i$ is a membrane stress and $z\sigma_i^b$ is the stress due to bending.

For a shell composed of ribs and stringers the expression for stresses cannot be obtained in the above manner. When stresses are required it is not necessary to first compute stress resultants and couples based on strains and curvature changes. However, the computation of stresses in the skin and stiffeners of an orthotropic shell in which the stress variation between stiffeners is small must be obtained by use of the basic equations for stress. These equations are given by

Stress in skin:

$$\sigma_x = \frac{E}{1 - \nu^2} [(\bar{\epsilon}_1 + \nu\bar{\epsilon}_2) + z(\chi_1 + \nu\chi_2)] \tag{2.14}$$

$$\sigma_\theta = \frac{E}{1 - \nu^2} [(\bar{\epsilon}_2 + \nu\bar{\epsilon}_1) + z(\chi_2 + \nu\chi_1)] \tag{2.15}$$

Stress in stringer:

$$\sigma_x = E(\bar{\epsilon}_1 + z\chi_1) \qquad \text{where } |z| > \frac{h}{2} \tag{2.16}$$

Stress in rib:

$$\sigma_\theta = E(\bar{\epsilon}_2 + z\chi_2) \qquad \text{where } |z| > \frac{h}{2} \tag{2.17}$$

In the digital program there is an option to printout the above strains.

Section 3

NUMERICAL ANALYSIS

The finite-difference method is used to solve the governing equations of a cylindrical shell segment with fixed edges. The scheme in this numerical method of solution is to replace the problem of a continuous coordinate system by a problem defined at a finite number of coordinate points. To accomplish this discretization, the continuous two dimensional (x, θ) domain of the cylinder is covered by a uniform rectangular net as shown in Fig. 9. Lattice points of this net which are within the domain $\underset{\sim}{D}$

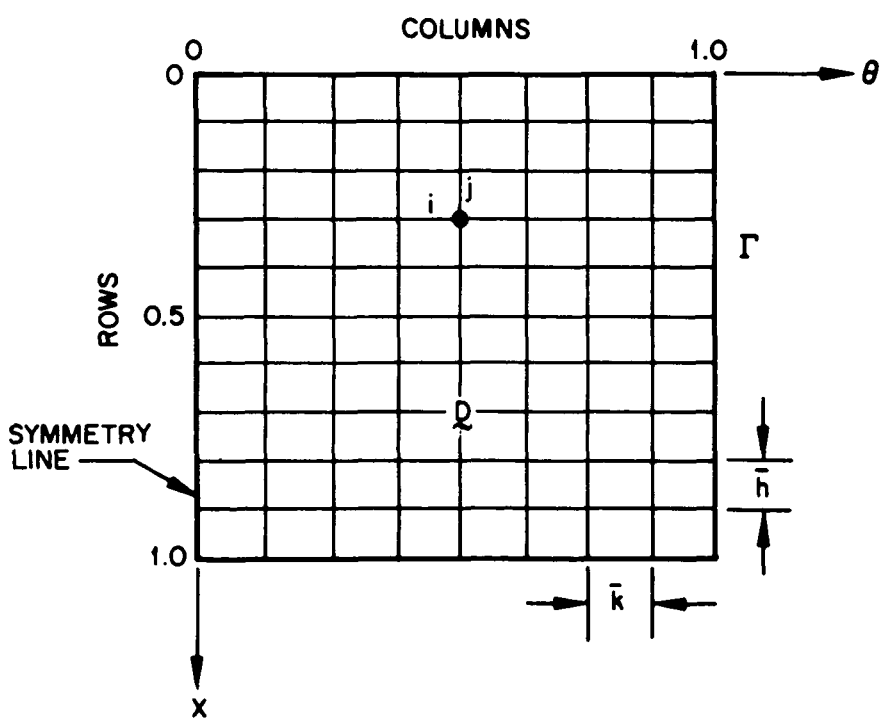

Fig. 9 Domain and Boundary of Cylindrical Shell Segment

are called mesh points and lattice points on the boundary curve Γ are called boundary points. At these lattice points the dependent variables (u, v, w) of the governing differential equations are replaced by the discrete values of u_i^j, v_i^j, w_i^j. The subscript i of u_i^j denotes the row number and corresponds to the x-coordinate while the superscript j denotes the column number and corresponds to the θ-coordinate. In general, the boundary curve does not coincide with the net. However, in the problem under consideration, this complication does not exist.

The difference equations which are a set of algebraic equations representing the governing equations and boundary conditions are formed by first approximating the derivatives at a given point by a function of the variable at neighboring points. These functions replace the derivatives of the governing equations. Thus, at each mesh point three algebraic equations can be written in terms of neighboring points. When the boundary conditions are accounted for in these equations the resulting set of simultaneous algebraic equations

$$\underset{\sim}{A}X = \underset{\sim}{B}$$

replaces the continuous problem. The solution of this set of algebraic equations can be accomplished by methods described in Vol. I.

3.1 APPROXIMATION OF DERIVATIVES

To transform the governing equations to difference form, the derivatives of u, v, w are expressed in terms of their values at neighboring mesh points. These derivatives are determined by a Taylor series approximation* for a rectangular net and are given by the following equations:

---

*"Investigation of Juncture Stress Fields in Multicellular Shell Structures," by E. Y. W. Tsui, F. A. Brogan, J. M. Massard, P. Stern, and C. E. Stuhlman, Technical Report M-03-63-1, Lockheed Missiles & Space Company, Sunnyvale, Calif., Feb 1964 – NASA CR-61050.

$$f,_{x} = 1/2\bar{h}\left(f_1^o - f_{-1}^o\right) \tag{3.1a}$$

$$f,_{xx} = 1/\bar{h}^2\left(f_1^o - 2f_o^o + f_{-1}^o\right) \tag{3.1b}$$

$$f,_{xxx} = 1/2\bar{h}^3\left(f_2^o - 2f_1^o + 2f_{-1}^o - f_{-2}^o\right) \tag{3.1c}$$

$$f,_{xxxx} = 1/\bar{h}^4\left(f_2^o - 4f_1^o + 6f_o^o - 4f_{-1}^o + f_{-2}^o\right) \tag{3.1d}$$

$$f,_{\theta} = 1/2\bar{k}\left(f_o^1 - f_o^{-1}\right) \tag{3.1e}$$

$$f,_{\theta\theta} = 1/\bar{k}^2\left(f_o^1 - 2f_o^o + f_o^{-1}\right) \tag{3.1f}$$

$$f,_{\theta\theta\theta} = 1/\bar{k}^3\left(f_o^2 - 2f_o^1 + 2f_o^{-1} - f_o^{-2}\right) \tag{3.1g}$$

$$f,_{\theta\theta\theta\theta} = 1/\bar{k}^4\left(f_o^2 - 4f_o^1 + 6f_o^o - 4f_o^{-1} + f_o^{-2}\right) \tag{3.1h}$$

$$f,_{x\theta} = 1/4\bar{h}\bar{k}\left(f_1^1 - f_{-1}^1 - f_1^{-1} + f_{-1}^{-1}\right) \tag{3.1i}$$

$$f,_{xx\theta} = 1/2\bar{h}^2\bar{k}\left(-2f_o^1 + 2f_o^{-1} + f_1^1 + f_{-1}^1 - f_1^{-1} - f_{-1}^{-1}\right) \tag{3.1j}$$

$$f,_{x\theta\theta} = 1/2\bar{h}\bar{k}^2\left(-2f_1^o + 2f_{-1}^o + f_1^1 + f_1^{-1} - f_{-1}^1 - f_{-1}^{-1}\right) \tag{3.1k}$$

$$f,_{xx\theta\theta} = 1/\bar{h}^2\bar{k}^2\left(-2f_1^o - 2f_{-1}^o - 2f_o^1 - 2f_o^{-1} + f_1^1 + f_{-1}^1 + f_1^{-1} + f_{-1}^{-1} + 4f_o^o\right) \tag{3.1l}$$

Lower order approximations to be used as noted

$$u,_{xxx} = 1/\bar{h}^3\left[u_2^o - 3u_1^o + 3u_o^o - u_{-1}^o\right] \tag{3.1m}$$

$$u,_{xxx} = 1/\bar{h}^3\left[u_1^o - 3u_o^o + 3u_{-1}^o - u_{-2}^o\right] \tag{3.1n}$$

$$u,_{\theta\theta\theta} = 1/\bar{k}^3\left[u_o^1 - 3u_o^o + 3u_o^{-1} - u_o^{-2}\right] \tag{3.1o}$$

3.2 DIFFERENCE EQUATIONS

The formation of the difference equations is effected in a straightforward manner by substituting the appropriate expressions of Eqs. (3.1) into the governing equations [Eqs. (2.8)]. A complication arises when the equations are written at each mesh point and the boundary conditions are included in the appropriate equations; i.e., it is not possible to obtain a sufficient number of equations as unknowns. The application of central difference approximations requires that low-order approximations be used near the boundary so that this problem will not occur. It is noted that Eq. (2.8c) contains a third derivative of u with respect to x and a third derivative of v with respect to θ. The third derivatives as given by Eqs. (3.1c) and (3.1g) are in terms of five points hence is a higher order approximation (only four points are necessary for a third derivative). It was decided to incorporate the four point derivative [Eq. (3.1o)] for $v_{,\theta\theta\theta}$ throughout while the third derivative in x would only be changed to Eqs. (3.1m) and (3.1n) when the equations are written one row from the boundary. After these substitutions, the governing equations in difference form at a point o,o are as follows:

$$A_1\left(u_1^o + u_{-1}^o\right) + A_2 u_o^o + A_3\left(u_o^1 + u_o^{-1}\right) + A_4\left(v_1^1 - v_{-1}^1 - v_1^{-1} + v_{-1}^{-1}\right) + A_5\left(w_1^o - w_{-1}^o\right)$$
$$+ A_6\left(w_2^o - w_{-2}^o\right) = A_o^o \tag{3.2a}$$

$$B_1\left(u_1^1 - u_{-1}^1 - u_1^{-1} + u_{-1}^{-1}\right) + B_2\left(v_1^o + v_{-1}^o\right) + B_3 V_o^o + B_4\left(v_o^1 + v_o^{-1}\right) + B_5\left(w_o^1 - w_o^{-1}\right)$$
$$+ B_6\left(w_1^1 + w_{-1}^1 - w_1^{-1} - w_{-1}^{-1}\right) + B_7\left(w_o^2 - w_o^{-2}\right) = B_o^o \tag{3.2b}$$

$$C_1\left(u_2^o - u_{-2}^o\right) + C_2\left(u_1^o - u_{-1}^o\right) + C_3 V_o^{-2} + 3C_3 V_o^o + C_4 V_o^1 + C_5 V_o^{-1} + C_6\left[v_1^1 + v_{-1}^1 - v_1^{-1} - v_{-1}^{-1}\right]$$
$$+ C_7\left(w_2^o + w_{-2}^o\right) + C_8\left(w_1^o + w_{-1}^o\right) + C_9\left(w_o^1 + w_o^{-1}\right) + C_{10}\left(w_1^1 + w_{-1}^1 + w_1^{-1} + w_{-1}^{-1}\right)$$
$$+ C_{11}\left(w_o^2 + w_o^{-2}\right) + C_{12} W_o^o = C_o^o \tag{3.2c}$$

where

$$A_1 = a_1/\bar{h}$$

$$A_2 = -2(A_1 + A_3)$$

$$A_3 = a_2/\bar{k}^2$$

$$A_4 = a_3/4\bar{h}\bar{k}$$

$$A_5 = a_4/2\bar{h} - 2A_6$$

$$A_6 = a_5/2\bar{h}^3$$

$$A_o^o = A$$

$$B_1 = A_4$$

$$B_2 = b_2/\bar{h}^2$$

$$B_3 = -2(B_2 + B_4)$$

$$B_4 = b_3/\bar{k}^2$$

$$B_5 = -2(B_6 + B_7) + b_6/2\bar{k}$$

$$B_6 = b_4/2\bar{h}^2\bar{k}$$

$$B_7 = b_5/2\bar{k}^3$$

$$B_o^o = B$$

$$C_1 = c_1/2\bar{h}^3$$

$$C_2 = c_2/2\bar{h} - 2C_1$$

$$C_3 = - c_4/\bar{k}^3$$

$$C_4 = - 2C_6 - C_3 + c_5/2\bar{k}$$

$$C_5 = - C_4 - 4C_3$$

$$C_6 = c_3/2\bar{h}^2\bar{k}$$

$$C_7 = c_6/\bar{h}^4$$

$$C_8 = - (4C_7 + 2C_{10})$$

$$C_9 = - 2(C_{10} + 2C_{11}) + c_9/\bar{k}^2$$

$$C_{10} = c_7/\bar{h}^2\bar{k}^2$$

$$C_{11} = c_8/\bar{k}^4$$

$$C_{12} = 6C_7 + 4C_{10} + 6C_{11} - c_{10} - 2C_9/\bar{k}^2$$

$$C_o^o = C$$

The complete set of difference equations are obtained by writing these equations at each mesh point. Along lines of symmetry only two equations are necessary since one of the variables will be zero. After the incorporation of fixed edge boundary conditions, a sufficient number of equations for unknowns yields a set of simultaneous algebraic equations which are written in matrix form as

$$\underset{\sim}{A}X = \underset{\sim}{B}$$

Unless care is exercised in ordering the equations and unknowns, the square matrix $\underset{\sim}{A}$ can be full. From the aspect of solving a large number of equations (Vol. I), the ordering is important. To establish an insight into the idea of the ordering employed, it is noticed from the difference expressions [Eqs. (3.1)] that the highest derivatives are in terms of at most two rows "above;" two rows "below;" two columns to the "left," and two columns to the "right" of a given meshpoint. If all the equations for a given column were written and stored in submatrix form, the unknowns would involve two columns to the "right" and "left." Thus, any column would involve, at most, five submatrices. The matrix $\underset{\sim}{A}$ is accordingly partitioned in the manner shown below, where m is the number of columns in the finite difference net.

$$\underset{\sim}{A} = \begin{bmatrix} E_1 & F_1 & G_1 & \cdot & \cdot & \cdot & & & 0 \\ D_2 & E_2 & F_2 & G_2 & & & & & \\ C_3 & D_3 & F_3 & F_3 & G_3 & 0 & & & \\ \cdot & & & & & & & & \\ \cdot & & & & & & & & \\ \cdot & & & & & & & & \\ & & & & & & & G_{n-2} & \\ & & & & & & & F_{m-1} & \\ & & & & & & C_m & D_m & E_m \end{bmatrix}$$

This matrix $\underset{\sim}{A}$ is obtained by writing Eqs. (3.1) in $\underset{\sim}{D}$ and not on the boundary Γ. The boundary and symmetry conditions have been used to eliminate certain equations. Fixed-edge boundary conditions are well-suited for this formulation, since they do not require complex algebraic expressions. Specifically, if Eqs. (3.1) are written one column from the boundary, then the submatrix F_m is zero $(u = v = w = 0)$ and the submatrix G_m contains only w terms which are reflected into E_m due to the boundary condition that does not permit rotation. Along a symmetry line all terms are either reflected with the same or opposite sign. This fact accounts for the missing C_1 and D_1 matrices. Similar alterations are made in each matrix to account for boundary and symmetry conditions.

3.3 GRADING OF MESH

For a cylinder the solution in $\underset{\sim}{D}$ is not uniform; at the boundary ($x = 0, 1$) the variation of the dependent variables occurs in a small interval. Such boundary behavior is characteristic of shell-type problems. For a cylinder, this behavior occurs only in the x-direction. To reveal the solution in sufficient detail in this region requires a small mesh spacing. To obtain this spacing without increasing the number of unknowns, some type of variable spacing must be incorporated. A rather simple method which accomplishes the small spacing and which does not destroy the form of the matrix $\underset{\sim}{A}$ is called grading. In grading, the mesh spacing is changed by a factor of two from the parent mesh as shown in Fig. 10.

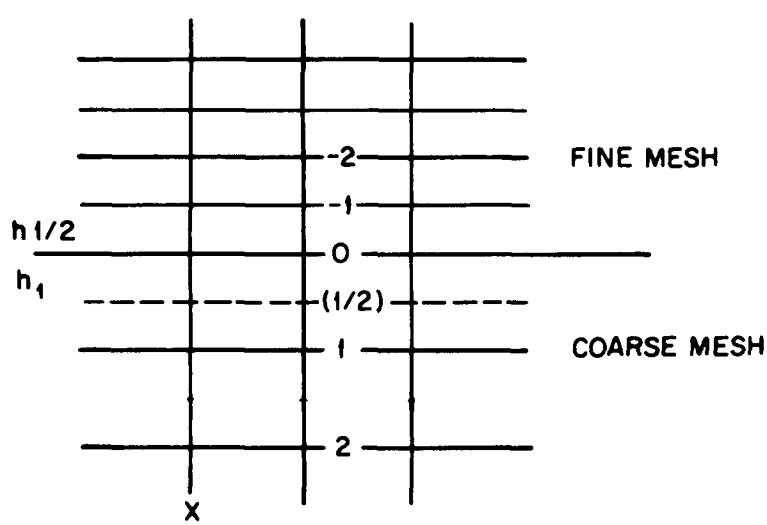

Fig. 10 Grading by Factor of Two

The major problem associated with grading mesh in the x-direction is obtaining the equation at the interface between different meshes. The following method is employed:

- Point o is considered as an ordinary point of the fine mesh and derivatives are expressed in terms of points -2, -1, 0, 1/2, 1 where point 1/2 is obtained by interpolation of 1 and 0.
- Points, such as 1 which is interior to the coarse net, are considered to be in the mesh space $\bar{h}$ and use points -2, 0, 1, 2, 3.
- Points, such as -1 which is interior to the fine mesh, are considered to have mesh spacing $\bar{h}/2$ and use points -3, -2, -1, 0, 1/2.

Section 4
DIGITAL PROGRAM

4.1 GENERAL DESCRIPTION

The present program provides solutions for fixed-edge stiffened and unstiffened cylindrical panels under loads and changes of temperature. The method of solution consists basically in obtaining the displacement components u, v, and w at various discrete stations of the structure by finite-difference approximation (see Secs. 2 and 3). The corresponding strains and stresses may then be computed.

The program is designed to compute the fixed-edge forces due to intermediate loads or thermal gradient. However, displacements, strains, and stresses in the loaded region are also evaluated simultaneously. The following program options are available:

- Construction
  - (a) Isotropic
  - (b) Orthotropic
- Finite-Difference Mesh
  - (a) Uniform spacing
  - (b) Graded spacing in the x-direction
  - (c) Symmetry in the x-direction
- Loading conditions
  - (a) Uniform normal pressure
  - (b) Linear normal pressure
  - (c) Linear temperature gradient through the skin thickness

There are no restrictions on the geometrical dimensions of panels. However, the accuracy with which the basic differential equations are approximated may vary for different configurations of the cylinder.

The finite-difference mesh network is specified completely by prescribing the number of rows and columns exclusive of the boundaries, together with the grading options which have been chosen. Rows in the finite-difference mesh are parallel to the θ-axis, and columns are parallel to the x-axis. The number of rows may vary from 4 to 24 and the number of columns from 4 to 80. Thus, a maximum of 5760 unknowns can be solved. Greater accuracy near the boundaries can often be obtained by selecting grading. By this means, it is possible to use a mesh spacing at the boundary as little as 1/32 of that at the middle portion of the panel.

There are certain restrictions on the use of the grading option. When such an option is used, a separate input card is required to specify a mesh spacing exponent MM(J) for each row J. The finite-difference equations written along row J, then use the mesh spacing XH/2**MM(J). This distance must be the least of the two distances from row J to the row above and the row below. XH is the basic input mesh spacing along the x-direction. For any row J, MM(J) and MM(J+1) must not differ by more than 1. Also, three consecutive rows cannot have three distinct exponents. MM(J) may vary from 0 to 5.

Figure 11 shows the flow diagram of this program. The description of symbols, and input data are shown in Tables 1 and 2.

4.2 NUMERICAL EXAMPLE

The analysis of the cylindrical panel with ribs and stringers (orthotropic shell) shown in Fig. 12 will serve as an example to illustrate input data format and the type of information that can be obtained through use of the program described in this volume.

The example is for the loading option of uniform normal pressure (P_z = constant) in which two symmetry lines are present. The grading option is used to obtain a reasonable solution. The actual mesh spacing which yields solutions of desired accuracy must be obtained by exploring runs with different mesh spacing. The 14 row 20 column mesh used in this example proved satisfactory for the particular geometry.

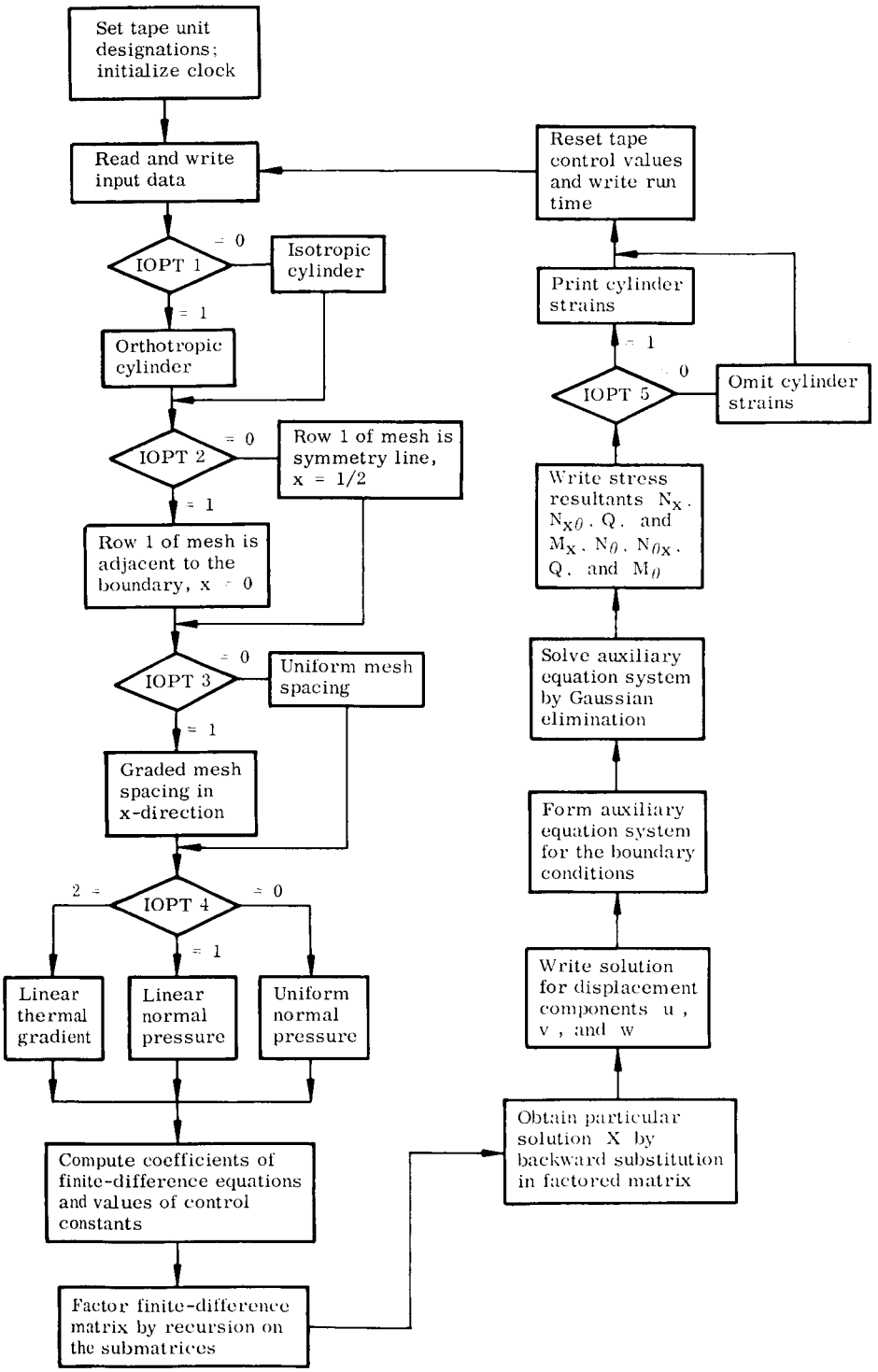

Fig. 11 Flow Chart

Table 1

DESCRIPTION OF SYMBOLS

Symbol		Description
IφPT1	0	Isotropic cylinder
	1	Anisotropic cylinder
IφPT2	0	Row 1 of mesh is symmetry line, x = 0.5
	1	Row 1 of mesh is adjacent to boundary
IφPT3	0	Uniform mesh spacing
	1	Graded mesh spacing in x-direction
IφPT4	0	Uniform normal pressure
	1	Linear normal pressure
	2	Linear temperature gradient through the skin thickness
IφPT5	0	Omit cylinder strains
	1	Print cylinder strains
RφW		Number of rows in the finite-difference mesh
CφL		Number of columns in the finite-difference mesh
XH		Basic distance between rows in the mesh
XK		Basic distance between columns in the mesh
ZNU		Poisson's ratio
RHφ		Shape factor $(R\theta_c/L)$
THC		Half angle of segment (see Fig. 3)
R1H		Radius to thickness ratio (R/h)
D1H		Depth of stiffener to thickness ratio (d/h)
D1B		Ratio of depth to spacing of stiffeners (d/b)
T1H		Ratio of stiffener width to skin thickness (t/h)
C1H		Ratio of eccentricity of stiffener to skin thickness (c/h)
Pφ		Initial value of linear pressure
DP		Linear pressure coefficient [P(ZETA) = Pφ + DP*ZETA]
TE		External temperature
TI		Internal temperature

Table 1 (cont'd)

Symbol	Description
$T\phi$	Ambient temperature for zero stress
OC	Coefficient of thermal expansion
MM(J), J=1, RϕW	Grading mesh constants; mesh spacing used for difference equations on row J is equal to XH/2.**MM(J)
MM(31)	Number of rows to be plotted
MM(32) MM(33) MM(34) MM(35)	Four row numbers for which plot output is desired (U, V, W, N_x, M_x, N_θ, M_θ)
CILBL(I, 1), I=1,6 CILBL(I, 2), I=1,6 CILBL(I, 3), I=1,6 CILBL(I, 4), I=1,6	Curve labels appearing on the plot output to identify the rows selected CILBL(I, 1) corresponds to MM(32); etc.

Table 2

INPUT DATA SEQUENCE AND FORMAT

Card	Fortran Symbol	Format
1	RECORD	72H
2	IφPT1 , IφPT2 , IφPT3 , IφPT4 , IφPT5	5I1
3	RφW , CφL , XH , XK	6E12.8
4	ZNU , RHφ , THC , R1H	6E12.8
5[a]	D1B , D1H , T1H , C1H	6E12.8
6[b]	Pφ , DP	6E12.8
7[c]	TE , TI , Tφ, OC	6E12.8
8[d]	MM(J) , J=1 , RφW	35I2
9	MM(J) , J=31 , 35	5I2
10[e]	CILBL(I , 1) , I=1,6	6A6
11[e]	CILBL(I , 2) , I=1,6	6A6
12[e]	CILBL(I , 3) , I=1,6	6A6
13[e]	CILBL(I , 4) , I=1,6	6A6

(a) Omitted unless IφPT1=1
(b) Omitted unless IφPT4=1
(c) Omitted unless IφPT4=2
(d) Omitted unless IφPT3=1
(e) Omitted if MM(31)=0

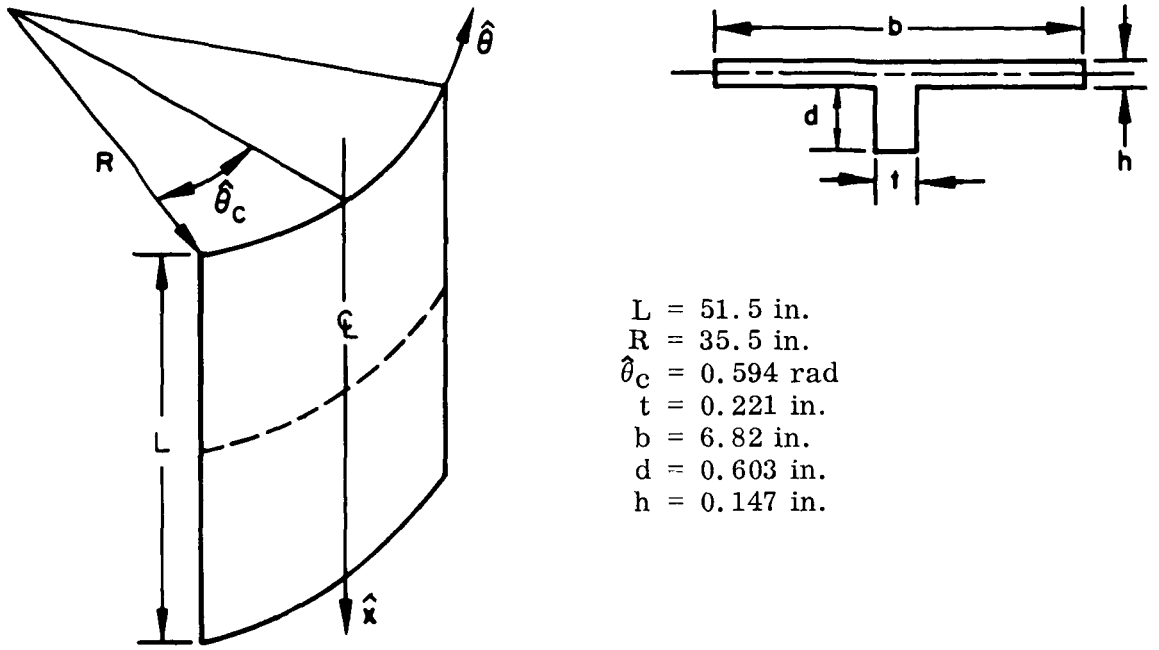

Fig. 12 Cylindrical Panel for the Example

Values of input quantities are given in Table 3 and a listing of the corresponding input data cards is presented in Table 4. For convenience, the coordinate value x corresponding to the row number is as follows:

x = 0	– Row 15	x = 0.1	– Row 7
x = 0.00625	– Row 14	x = 0.15	– Row 6
x = 0.0125	– Row 13	x = 0.2	– Row 5
x = 0.01375	– Row 12	x = 0.25	– Row 4
x = 0.25	– Row 11	x = 0.3	– Row 3
x = 0.0375	– Row 10	x = 0.4	– Row 2
x = 0.05	– Row 9	x = 0.5	– Row 1
x = 0.075	– Row 8		

The computer results are in the form of printed digital values and plots. The sample printed output given in Table 5 presents displacements components (u , v , w) stress resultants (N_x , N_θ , $N_{x\theta}$, $N_{\theta x}$, M_x , M_θ , $M_{x\theta}$, Q_x , Q_θ) , and boundary stress resultants (N_{tan} , N_{norm} , Q , M) . [Note that these quantities are in non-dimensional form.] Plotted output includes displacement components (u , v , w)

Table 3

INPUT VALUES FOR THE EXAMPLE

Symbol	Value	Symbol	Value
IϕPT1	1	MM(4)	1
IϕPT2	0	MM(5)	1
IϕPT3	1	MM(6)	1
IϕPT4	0	MM(7)	2
IϕPT5	0	MM(8)	2
RϕW	14.0	MM(9)	3
CϕL	20.0	MM(10)	3
XH	0.1	MM(11)	4
XK	0.05	MM(12)	4
ZNU	0.3	MM(13)	4
RHϕ	0.4	MM(14)	4
THC	0.594	MM(31)	04
R1H	242.0	MM(32)	01
D1H	4.1	MM(33)	06
D1B	0.0884	MM(34)	09
TH	1.5	MM(35)	13
C1H	2.55	CILBL(I, 1)I=1,6	x = 0.5, symmetry line
Pϕ, DP, TE, TI, Tϕ, OC	Not required	CILBL(I, 2)I=1,6	x = 0.15, Row 6
MM(1)	0	CILBL(I, 3)I=1,6	x = 0.05, Row 9
MM(2)	0	CILBL(I, 4)I=1,6	x = 0.0125, Row 13
MM(3)	1		

Table 4

INPUT DATA IN REQUIRED FORMAT

LOCKHEED MISSILES & SPACE COMPANY

80 COLUMN WORKSHEET
FORM LMSC 2874

1 EXAMPLE ORTHOTROPIC CYLINDER	CARD 1
10100	CARD 2
14 +20 5 21 +05 -1	CARD 3
3 +04 +0594 +0242 +3	CARD 4
884 -141 +115 +1255 +1	CARD 5
OMIT THIS CARD	CARD 6
OMIT THIS CARD	CARD 7
0 0 1 1 1 1 2 2 3 3 4 4 4 4	CARD 8
0401060913	CARD 9
x=0.5,SYMMETRY LINE	CARD 10
x=0.15,ROW 6	CARD 11
x=0.05,ROW 9	CARD 122
x=0.125,ROW 13	CARD 13

and stress resultants (N_x , N_θ , M_x , M_θ) along four specified rows, and boundary stress resultants (N_{tan} , N_{norm} , Q , M) along the boundary curve. This plotted output is shown in Figs. 13a through f.

Table 5

SAMPLE PROBLEM ORTHOTROPIC CYLINDER NORMAL PRESSURE

CYLINDER DISPLACEMENT COMPONENTS (U, V, W)

COL	ROW		U	V	W
1,	17		0.	0.	4.639469E-02
1,	16		1.867072E-03	0.	1.068088E-02
1,	15	BOUNDARY	0.	0.	0.
1,	14		-1.284630E-03	0.	1.068088E-02
1,	13		-1.970761E-03	0.	3.757576E-02
1,	12		-2.146589E-03	0.	7.598753E-02
1,	11		-1.886211E-03	0.	1.216492E-01
1,	10		-6.268877E-04	0.	2.197437E-01
1,	9		7.368894E-04	0.	3.220843E-01
1,	8		3.060286E-03	0.	5.268981E-01
1,	7		4.810151E-03	0.	6.942787E-01
1,	6		5.546042E-03	0.	9.627899E-01
1,	5		4.607340E-03	0.	1.094271E 00
1,	4		3.100316E-03	0.	1.154270E 00
1,	3		1.885045E-03	0.	1.187821E 00
1,	2		2.771763E-04	0.	1.238483E 00
1,	1	SMTY LINE	0.	0.	1.264708E 00
2,	17		0.	0.	4.643006E-02
2,	16		1.867419E-03	2.395163E-04	1.068889E-02
2,	15	BOUNDARY	0.	0.	0.
2,	14		-1.284551E-03	-2.394961E-04	1.068889E-02
2,	13		-1.970173E-03	-4.794142E-04	3.760434E-02
2,	12		-2.145067E-03	-7.201626E-04	7.604596E-02
2,	11		-1.883325E-03	-9.621046E-04	1.217435E-01
2,	10		-6.204223E-04	-1.449002E-03	2.199158E-01
2,	9		7.474678E-04	-1.941692E-03	3.223415E-01
2,	8		3.080177E-03	-2.936370E-03	5.273326E-01
2,	7		4.840821E-03	-3.934191E-03	6.948892E-01
2,	6		5.599483E-03	-5.904731E-03	9.637371E-01
2,	5		4.683598E-03	-7.734518E-03	1.095230E 00
2,	4		3.190010E-03	-9.321540E-03	1.154876E 00
2,	3		1.973994E-03	-1.056890E-02	1.187832E 00
2,	2		3.367156E-04	-1.233849E-02	1.237066E 00
2,	1	SMTY LINE	0.	-1.315655E-02	1.262910E 00

Table 5 (cont'd)

CYLINDER STRESS RESULTANTS.

ROW	COL	NX	NTHETA	NXTHETA	NTHETAX
1,	1	2.6528E-01	1.0063E 00	0.	0.
1,	2	2.6489E-01	1.0060E 00	-0.	0.
1,	3	2.6373E-01	1.0054E 00	-0.	0.
1,	4	2.6190E-01	1.0043E 00	-0.	0.
1,	5	2.5951E-01	1.0028E 00	-0.	0.
1,	6	2.5669E-01	1.0010E 00	-0.	0.
1,	7	2.5358E-01	9.9882E-01	-0.	0.
1,	8	2.5027E-01	9.9642E-01	-0.	0.
1,	9	2.4685E-01	9.9382E-01	-0.	0.
1,	10	2.4340E-01	9.9109E-01	-0.	0.
1,	11	2.4003E-01	9.8826E-01	-0.	0.
1,	12	2.3687E-01	9.8536E-01	-0.	0.
1,	13	2.3402E-01	9.8239E-01	-0.	0.
1,	14	2.3161E-01	9.7929E-01	-0.	0.
1,	15	2.2972E-01	9.7601E-01	-0.	0.
1,	16	2.2842E-01	9.7241E-01	-0.	0.
1,	17	2.2771E-01	9.6839E-01	-0.	0.
1,	18	2.2759E-01	9.6377E-01	-0.	0.
1,	19	2.2805E-01	9.5843E-01	-0.	0.
1,	20	2.2911E-01	9.5224E-01	-0.	0.
1,	21	2.3095E-01	9.4519E-01	0.	0.
2,	1	2.6197E-01	1.0076E 00	0.	0.
2,	2	2.6171E-01	1.0074E 00	-1.8205E-03	-1.8229E-03
2,	3	2.6093E-01	1.0072E 00	-3.5577E-03	-3.5624E-03
2,	4	2.5963E-01	1.0068E 00	-5.1359E-03	-5.1426E-03
2,	5	2.5788E-01	1.0063E 00	-6.4952E-03	-6.5036E-03
2,	6	2.5573E-01	1.0058E 00	-7.5968E-03	-7.6066E-03
2,	7	2.5322E-01	1.0053E 00	-8.4271E-03	-8.4377E-03
2,	8	2.5037E-01	1.0048E 00	-8.9975E-03	-9.0083E-03
2,	9	2.4720E-01	1.0043E 00	-9.3438E-03	-9.3542E-03
2,	10	2.4379E-01	1.0036E 00	-9.5235E-03	-9.5329E-03
2,	11	2.4025E-01	1.0026E 00	-9.6109E-03	-9.6186E-03
2,	12	2.3673E-01	1.0012E 00	-9.6908E-03	-9.6962E-03
2,	13	2.3341E-01	9.9932E-01	-9.8495E-03	-9.8522E-03
2,	14	2.3049E-01	9.9680E-01	-1.0165E-02	-1.0165E-02
2,	15	2.2816E-01	9.9355E-01	-1.0697E-02	-1.0693E-02
2,	16	2.2659E-01	9.8946E-01	-1.1475E-02	-1.1470E-02
2,	17	2.2586E-01	9.8447E-01	-1.2497E-02	-1.2489E-02
2,	18	2.2602E-01	9.7851E-01	-1.3713E-02	-1.3704E-02
2,	19	2.2698E-01	9.7157E-01	-1.5032E-02	-1.5024E-02
2,	20	2.2853E-01	9.6362E-01	-1.6319E-02	-1.6314E-02

Table 5 (cont'd)

CYLINDER STRESS RESULTANTS.

ROW	COL	MX	MTHETA	MXTHETA	QX	QTHETA
1,	1	5.0592E-05	-1.0763E-03	0.	-0.	0.
1,	2	5.0581E-05	-1.0724E-03	-0.	-0.	7.5491E-05
1,	3	5.0443E-05	-1.0610E-03	-0.	-0.	1.1768E-04
1,	4	4.9633E-05	-1.0426E-03	-0.	-0.	1.0103E-04
1,	5	4.7371E-05	-1.0178E-03	-0.	-0.	-4.6353E-06
1,	6	4.3004E-05	-9.8810E-04	-0.	-0.	-2.3431E-04
1,	7	3.6363E-05	-9.5559E-04	-0.	-0.	-6.2220E-04
1,	8	2.7829E-05	-9.2348E-04	-0.	-0.	-1.1931E-03
1,	9	1.8175E-05	-8.9564E-04	-0.	-0.	-1.9557E-03
1,	10	8.3288E-06	-8.7630E-04	-0.	-0.	-2.8997E-03
1,	11	-8.0897E-07	-8.6968E-04	-0.	-0.	-3.9963E-03
1,	12	-8.4913E-06	-8.7978E-04	-0.	-0.	-5.2001E-03
1,	13	-1.4187E-05	-9.1013E-04	-0.	-0.	-6.4521E-03
1,	14	-1.7612E-05	-9.6375E-04	-0.	-0.	-7.6835E-03
1,	15	-1.8745E-05	-1.0430E-03	-0.	-0.	-8.8188E-03
1,	16	-1.7856E-05	-1.1498E-03	-0.	-0.	-9.7790E-03
1,	17	-1.5573E-05	-1.2853E-03	-0.	-0.	-1.0484E-02
1,	18	-1.3013E-05	-1.4505E-03	-0.	-0.	-1.0857E-02
1,	19	-1.1997E-05	-1.6457E-03	-0.	-0.	-1.0824E-02
1,	20	-1.5405E-05	-1.8712E-03	-0.	-0.	-1.0318E-02
1,	21	-2.7679E-05	-2.1270E-03	0.	-0.	-9.2818E-03
2,	1	3.1744E-05	-1.0950E-03	0.	3.1202E-05	0.
2,	2	3.1315E-05	-1.0920E-03	2.3703E-06	2.7395E-05	-1.2359E-05
2,	3	3.0085E-05	-1.0865E-03	4.6311E-06	1.6108E-05	-5.0195E-05
2,	4	2.8769E-05	-1.0762E-03	6.6772E-06	-2.9826E-06	-4.3526E-06
2,	5	2.8420E-05	-1.0578E-03	8.4078E-06	-3.0281E-05	1.2611E-04
2,	6	2.9992E-05	-1.0282E-03	9.7279E-06	-6.5603E-05	2.3306E-04
2,	7	3.3853E-05	-9.8898E-04	1.0550E-05	-1.0750E-04	1.5135E-04
2,	8	3.9718E-05	-9.4522E-04	1.0800E-05	-1.5314E-04	-2.2747E-04
2,	9	4.6857E-05	-9.0355E-04	1.0420E-05	-1.9870E-04	-9.3213E-04
2,	10	5.4352E-05	-8.7049E-04	9.3820E-06	-2.3985E-04	-1.9362E-03
2,	11	6.1281E-05	-8.5183E-04	7.6981E-06	-2.7236E-04	-3.1832E-03
2,	12	6.6815E-05	-8.5246E-04	5.4324E-06	-2.9248E-04	-4.6021E-03
2,	13	7.0238E-05	-8.7644E-04	2.7123E-06	-2.9738E-04	-6.1142E-03
2,	14	7.0938E-05	-9.2716E-04	-2.6545E-07	-2.8542E-04	-7.6387E-03
2,	15	6.8365E-05	-1.0075E-03	-3.2344E-06	-2.5619E-04	-9.0954E-03
2,	16	6.2018E-05	-1.1202E-03	-5.8658E-06	-2.1043E-04	-1.0408E-02
2,	17	5.1462E-05	-1.2680E-03	-7.7813E-06	-1.4955E-04	-1.1505E-02
2,	18	3.6410E-05	-1.4542E-03	-8.5713E-06	-7.4986E-05	-1.2320E-02
2,	19	1.6901E-05	-1.6830E-03	-7.8134E-06	1.2648E-05	-1.2790E-02
2,	20	-6.4005E-06	-1.9598E-03	-5.0897E-06	1.1411E-04	-1.2850E-02

Table 5 (concl'd)

BOUNDARY STRESS RESULTANTS.

ROW	COL	NTAN	NNORM	Q	M
15,	1	0.	1.3740E-01	-9.7865E-02	-4.5881E-03
15,	2	-9.9253E-03	1.3764E-01	-9.7941E-02	-4.5917E-03
15,	3	-1.9856E-02	1.3839E-01	-9.8159E-02	-4.6019E-03
15,	4	-2.9786E-02	1.3972E-01	-9.8498E-02	-4.6168E-03
15,	5	-3.9693E-02	1.4176E-01	-9.8921E-02	-4.6334E-03
15,	6	-4.9522E-02	1.4464E-01	-9.9379E-02	-4.6478E-03
15,	7	-5.9183E-02	1.4854E-01	-9.9808E-02	-4.6548E-03
15,	8	-6.8540E-02	1.5361E-01	-1.0013E-01	-4.6485E-03
15,	9	-7.7403E-02	1.5998E-01	-1.0026E-01	-4.6221E-03
15,	10	-8.5528E-02	1.6772E-01	-1.0010E-01	-4.5683E-03
15,	11	-9.2609E-02	1.7679E-01	-9.9514E-02	-4.4787E-03
15,	12	-9.8280E-02	1.8704E-01	-9.8377E-02	-4.3448E-03
15,	13	-1.0212E-01	1.9807E-01	-9.6528E-02	-4.1573E-03
15,	14	-1.0369E-01	2.0921E-01	-9.3773E-02	-3.9062E-03
15,	15	-1.0253E-01	2.1932E-01	-8.9879E-02	-3.5816E-03
15,	16	-9.8260E-02	2.2662E-01	-8.4554E-02	-3.1739E-03
15,	17	-9.0609E-02	2.2831E-01	-7.7435E-02	-2.6758E-03
15,	18	-7.9514E-02	2.2004E-01	-6.8014E-02	-2.0857E-03
15,	19	-6.4861E-02	1.9454E-01	-5.5224E-02	-1.4113E-03
15,	20	-4.7527E-02	1.4206E-01	-3.7239E-02	-6.8500E-04
15,	21	5.2778E-06	0.	-3.8332E-04	-0.
15,	21				
15,	21	-0.	0.	-1.1373E-03	-0.
14,	21	4.7472E-02	9.5795E-02	-9.2014E-03	-1.5851E-04
13,	21	3.6854E-02	9.3074E-02	-1.4575E-02	-2.6829E-04
12,	21	5.7328E-02	1.5213E-01	-2.0018E-02	-4.8001E-04
11,	21	5.8159E-02	1.7713E-01	-2.3955E-02	-6.6753E-04
10,	21	7.8445E-02	2.6504E-01	-3.1613E-02	-1.0926E-03
9,	21	8.8080E-02	3.3439E-01	-3.4840E-02	-1.4496E-03
8,	21	1.0422E-01	4.7853E-01	-3.9606E-02	-2.0841E-03
7,	21	1.0879E-01	5.9205E-01	-3.6757E-02	-2.4067E-03
6,	21	1.0117E-01	7.7824E-01	-2.7202E-02	-2.6660E-03
5,	21	7.8073E-02	8.6801E-01	-1.8730E-02	-2.5554E-03
4,	21	5.6605E-02	9.0768E-01	-1.3892E-02	-2.3926E-03
3,	21	4.0230E-02	9.2840E-01	-1.1751E-02	-2.2986E-03
2,	21	1.7408E-02	9.5526E-01	-1.1864E-02	-2.2927E-03
1,	21	-0.	9.4519E-01	-9.2818E-03	-2.1270E-03

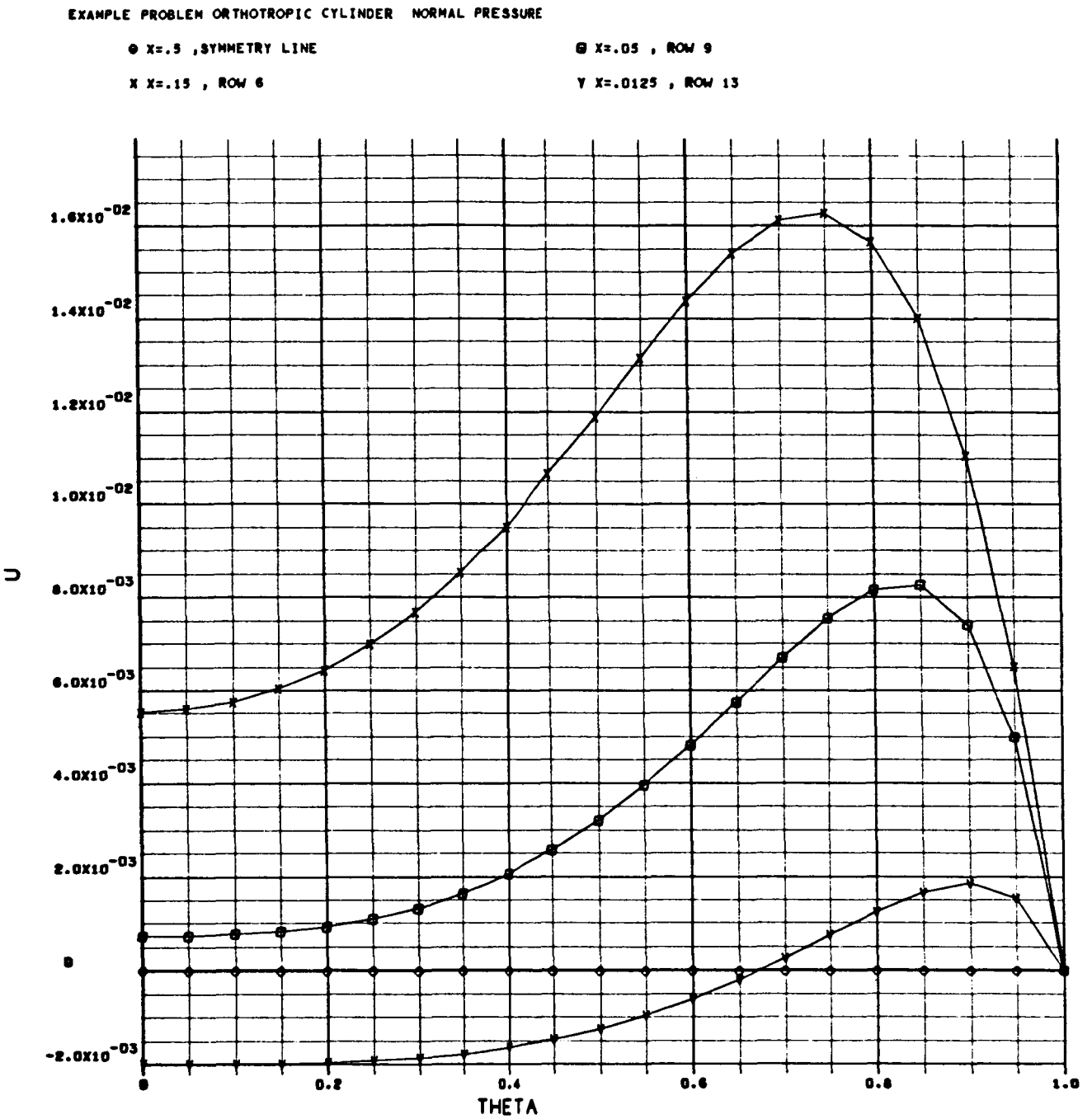

a – Cylinder Displacement Components

Fig. 13 Output Plot for Sample Problem Orthotropic Cylinder Normal Pressure

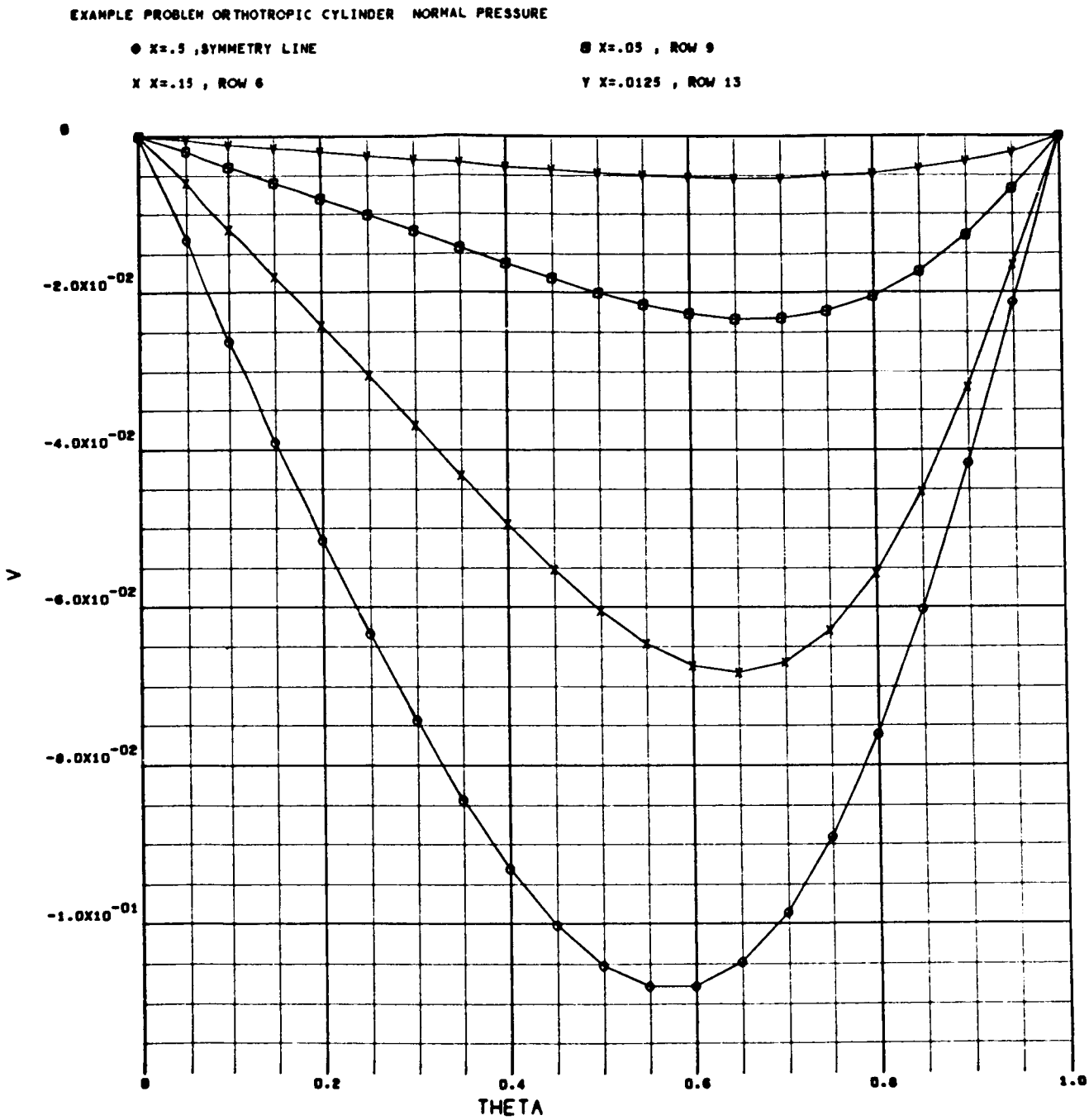

b – Cylinder Displacement Components

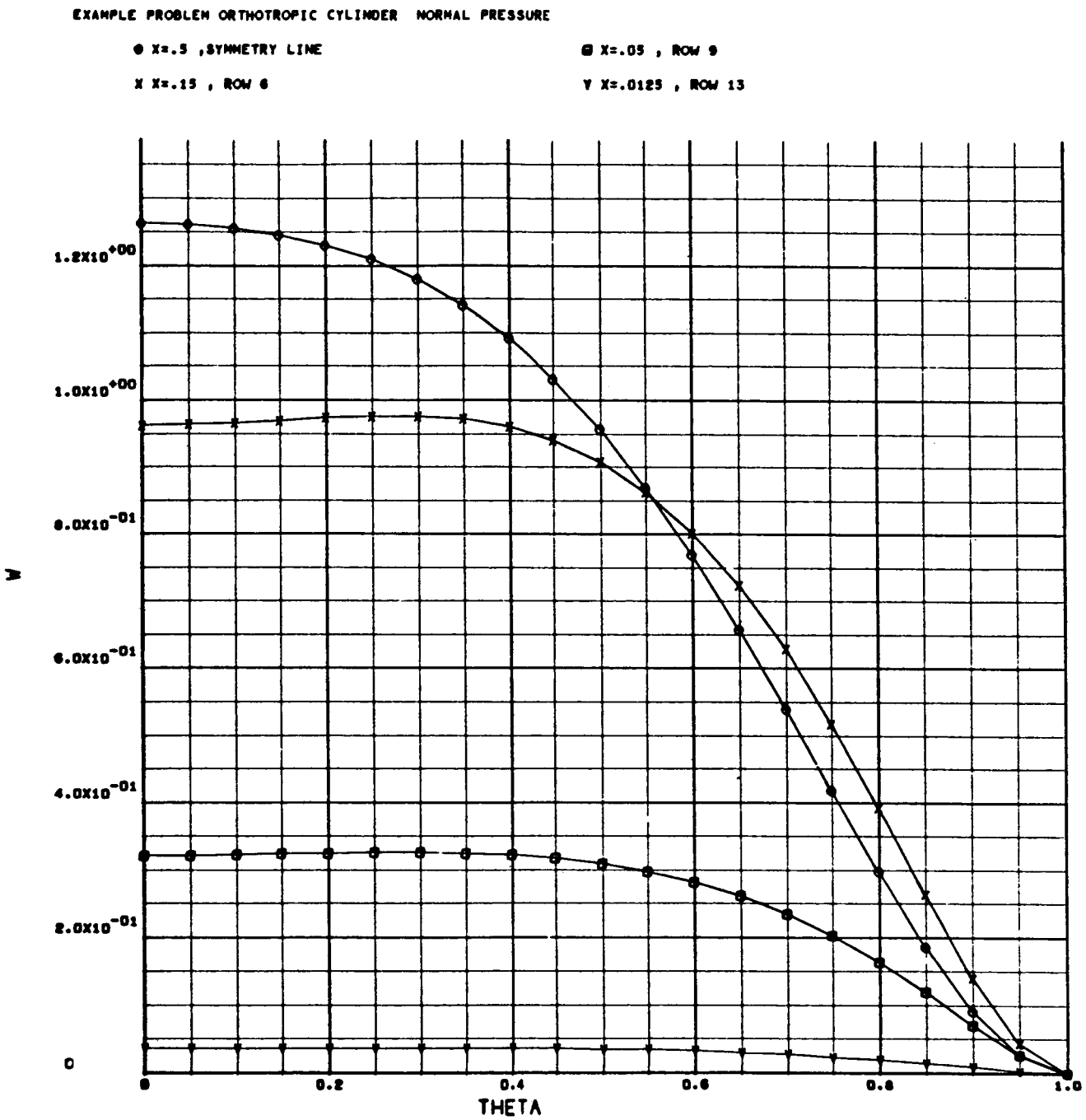

c – Cylinder Displacement Components

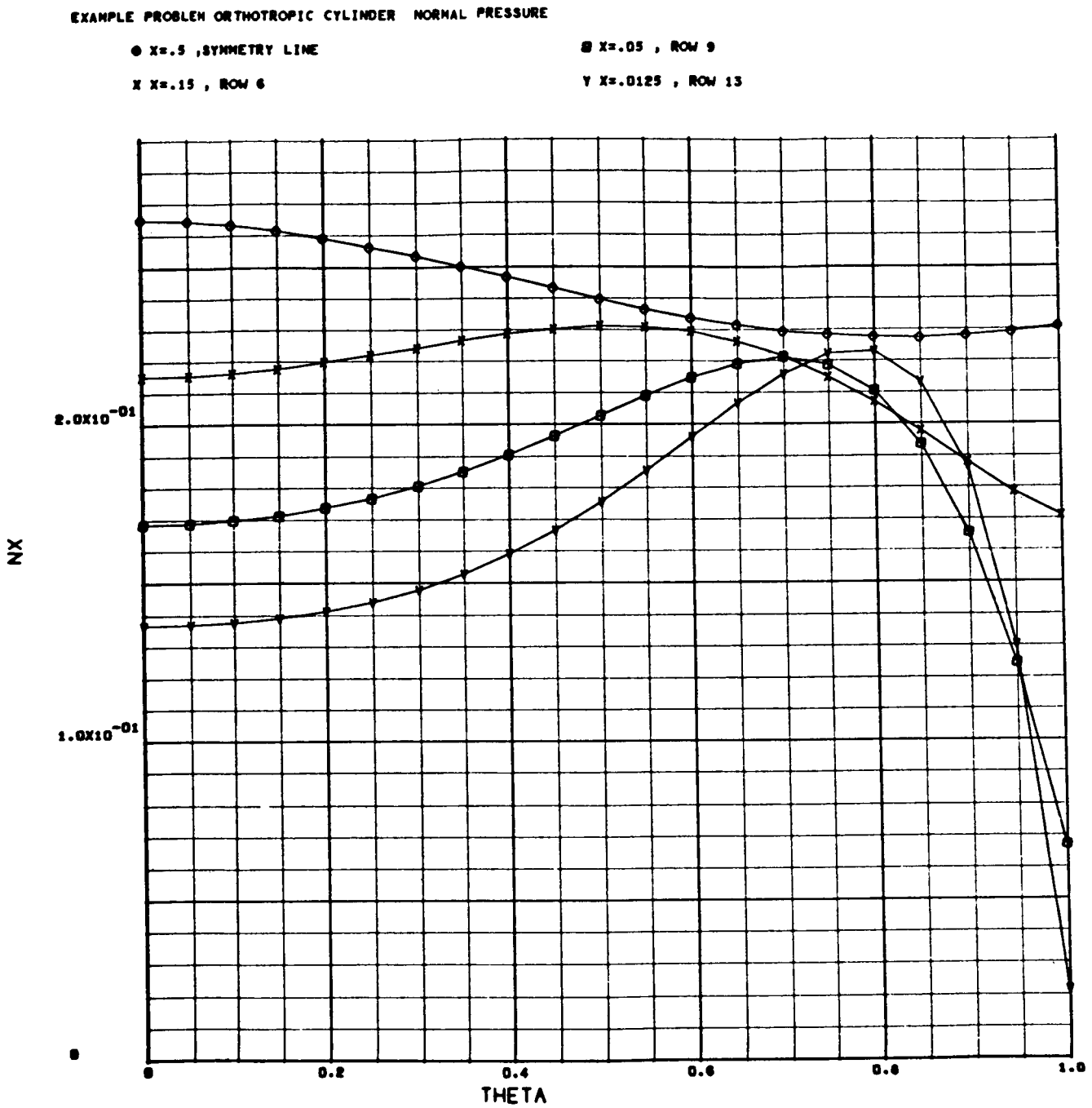

d – Cylinder Stress Resultants

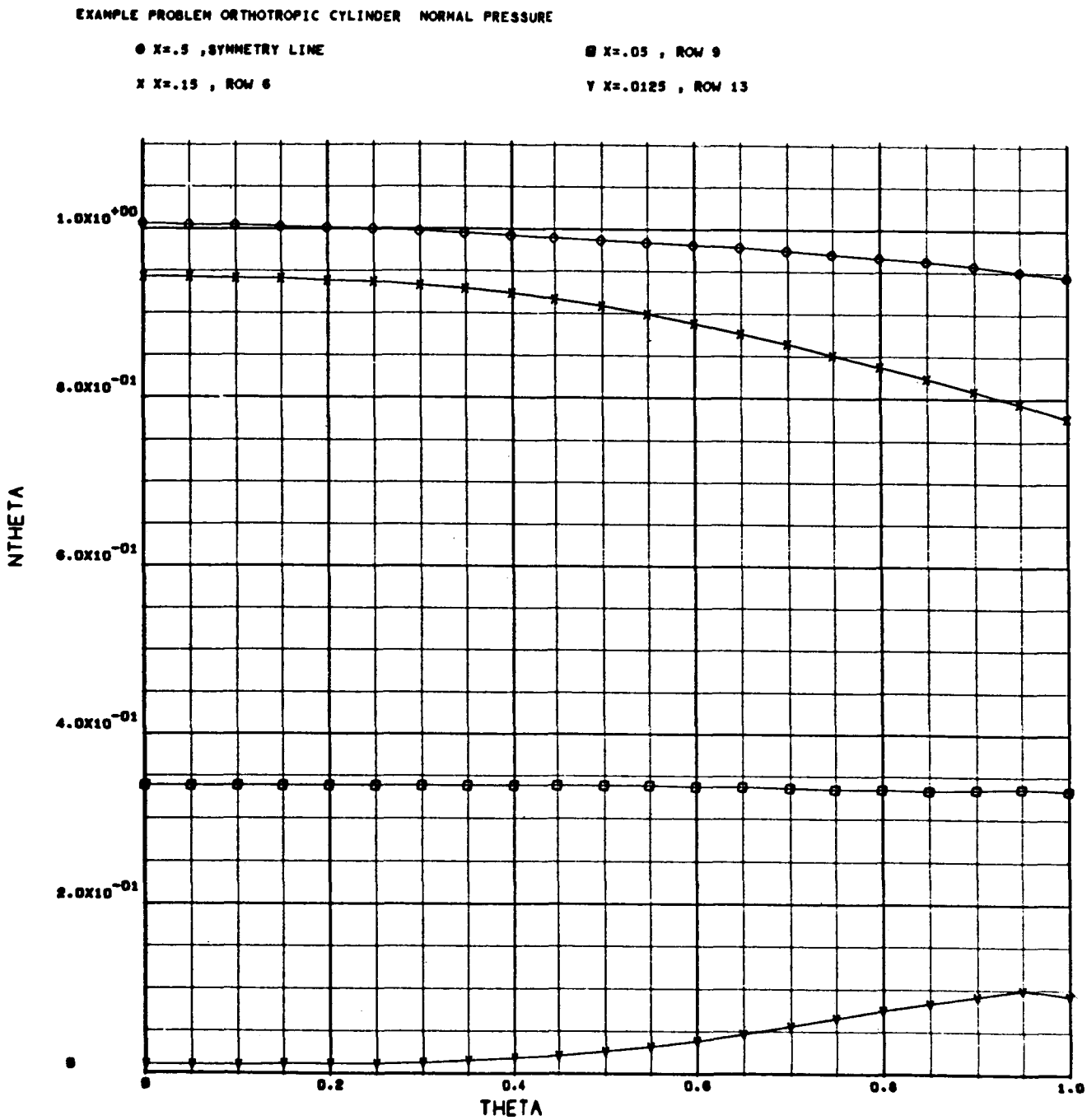

e – Cylinder Stress Resultants

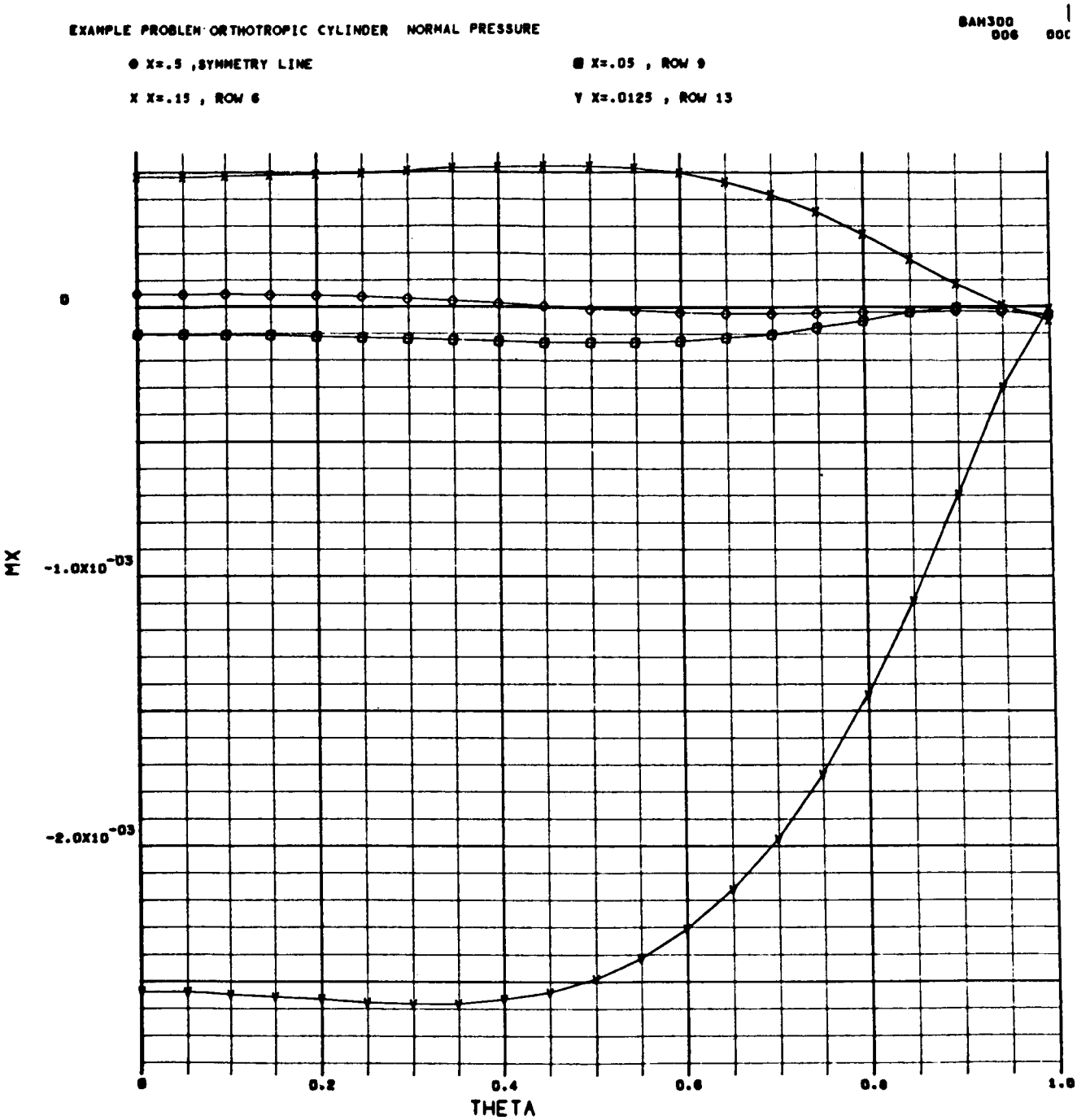

f – Cylinder Stress Resultants

4.3 LISTING OF THE PROGRAM

The complete source program is given in Table 6.

Table 6

STUDY OF JUNCTURE STRESS FIELDS: CYLINDRICAL SEGMENT

```
*       CHAIN (1,2)                                                     A1P00010
*       FORTRAN                                                         A1P00020
*       LIST                                                            A1P00030
CA1P    CYLINDRICAL SEGMENT - STUDY OF JUNCTURE STRESS  FIELDS-         A1P00040
C CONTRACT NAS 8-114800 TO NASA G.C. MARSHALL SPACE FLIGHT CENTER       A1P00050
C                         HUNTSVILLE, ALABAMA                           A1P00060
CBY     SOLID MECHANICS, AEROSPACE SCIENCES LABORATORY, 52-20.          A1P00070
C LOCKHEED MISSILES AND SPACE COMPANY, PALO ALTO CALIF                  A1P00080
                                                                        A1P00090
                                                                        A1P00100
                                                                        A1P00110
                                                                        A1P00120
                                                                        A1P00130
                                                                        A1P00140
C       THIS PROGRAM IS FOR USE ONLY ON FORTRAN II, VERSION II          A1P00150
C       GRADED MESH IN X DIRECTION.   MAXIMUM OF 24 ROWS, 80 COLUMNS    A1P00160
        DIMENSION  COMENT (12)                                          A1P00170
        COMMON NDIM, NROW, NCOL, MM, MFLAG, B, C                        A1P00180
        COMMON IOPT1, IOPT2, IOPT3, IOPT4, IOPT5, IOPT6, IOPT7, IOPT8   A1P00190
        COMMON A1, A2, A3, A4, A5, A6                                   A1P00200
        COMMON  B1, B2, B3, B4, B5, B6, B7, C1, C2, C3, C4, C5, C6, C7,C8,A1P00210
       1 C9, C10, C11, C12                                              A1P00220
        COMMON  TMP, YK, YL                                             A1P00230
        COMMON ZNU, RHO, THC, R1H, D1B, D1H, T1H, C1H                   A1P00240
        COMMON XH,XK, GDXH, PO, DP                                      A1P00250
        COMMON TE, TI, TO, OC, TC, TD, DDLD                             A1P00260
        COMMON ROT                                                      A1P00270
        COMMON EX, ENU, FTX, SC, DX, DTX, DNU                           A1P00280
        COMMON TIM1, TIM2, KTIME                                        A1P00290
        DIMENSION MM(40)                                                A1P00300
        DIMENSION TMP(5184), YK(5184), YL(4,4,324)                      A1P00310
        DIMENSION DISP(9), STRSS(9), ORDLBL(6,11),ABLBL(6), CILBL(6,4)  A1P00320
        DIMENSION ABSC(80), AORD(25), BOND(9)                           A1P00330
```

```
      DIMENSION CBLBL (6, 4)                                            A1P00340
      DIMENSION AXLBL (6)                                               A1P00350
      DIMENSION RECORD (12)                                             A1P00360
      DIMENSION ROT (80)                                                A1P00370
      DIMENSION T1( 89), T2(89), XX(89), XX1(89), Z(89), Z1(89), Z2(89) A1P00380
    1 FORMAT (1H1, 12A6)                                                A1P00390
    2 FORMAT (6E12.8)                                                   A1P00400
    3 FORMAT (1H1)                                                      A1P00410
    4 FORMAT (35I2)                                                     A1P00420
    5 FORMAT (1H1,3X,3HCOL ,  I5, 8I14/4H ROW)                          A1P00430
    6 FORMAT ( I4, 1P9E14.6)                                            A1P00440
    7 FORMAT (10I1 )                                                    A1P00450
    8 FORMAT (12A6)                                                     A1P00460
   14 FORMAT (26H0  FINITE DIFFERENCE MESH. I2, 7H ROWS,  I2,27H COLUMNSA1P00470
     1.  MESH SPACING. H= F15.7, 4H, K= F15.7 )                         A1P00480
   15 FORMAT (23H  INPUT CONSTANTS.  NU=1PE14.6,7H,  RHO=1PE14.6,10H,  TA1P00490
     1HETAC= 1PE14.6, 7H,  R/H 1PE14.6  )                               A1P00500
   16 FORMAT (39H0 A DIAGONAL SUBMATRIX IS SINGULAR, J=      I3)        A1P00510
   17 FORMAT (47H0   CYLINDER DISPLACEMENT COMPONENTS (U, V, W)   /     A1P00520
     1 10H0 COL  ROW  , I7X, 1HU, I5X, 1HV, I5X, 1HW  )                 A1P00530
   18 FORMAT (53H ROW COL    NX        NTHETA      NXTHETA     NTHETAX )A1P00540
   19 FORMAT (125H0ROW COL      EPSX        EPST            GAMMA       R*A1P00550
     1X1          R*X2          R*X12        OMEGAX      OMEGAT        PA1P00560
     2HI                )                                               A1P00570
   20 FORMAT (31H0  CYLINDER STRESS RESULTANTS.   )                     A1P00580
  920 FORMAT (29H  GRADED MESH IN X DIRECTION. / 2X, 4H ROW, 15I8/      A1P00590
     1 6X, 15I8)                                                        A1P00600
  921 FORMAT (9H SPACING , 15( 7H XH/2**I1) / 9X, 15( 7H XH/2**I1))     A1P00610
  922 FORMAT (27H  ROW 1 IS A SYMMETRY LINE   )                         A1P00620
  923 FORMAT (32H  ROW 1 IS ADJACENT TO BOUNDARY   )                    A1P00630
  930 FORMAT (1H I3, 1H, I3,              10X, 1P3E16.6 )               A1P00640
  931 FORMAT (1H I3, 1H, I3,10H  BOUNDARY   ,1P3E16.6 )                 A1P00650
  932 FORMAT (1H I3, 1H, I3,10H SMTY LINE   ,1P3E16.6 )                 A1P00660
  934 FORMAT ( 7H  D/B= 1PE14.6, 7H,  D/H=1PE14.6, 7H,  T/H=1PE14.6,    A1P00670
     1 7H,  C/H=1PE14.6 )                                               A1P00680
  936 FORMAT (30H0 BOUNDARY STRESS RESULTANTS.   / 8H0ROW COL   ,       A1P00690
     1 6X,4HNTAN, 9X, 5HNNORM, 10X,1HQ, 12X, 1HM   )                    A1P00700
  937 FORMAT ( I3, 2H,   I3, 2X, 1P5E12.4)                              A1P00710
  938 FORMAT ( I3, 2H,  I3, 66X, 1PE16.7  )                             A1P00720
```

```
  939 FORMAT (59H0   CYLINDER STRAINS,  CHANGES OF CURVATURE AND ROTATIOA1P00730
     1N.       )                                                         A1P00740
  940 FORMAT (28H  EDGE ROTATIONS, OMEGAX.     /(1P9E14.6))             A1P00750
  943 FORMAT (20H0 ISOTROPIC CYLINDER / )                               A1P00760
  944 FORMAT (23H0 ANISOTROPIC CYLINDER  / )                            A1P00770
  945 FORMAT ( 1H0 // 8H CASE NR I2,13H COMPLETED IN F8.3, 9H MINUTES.) A1P00780
  946 FORMAT (38H0BOUNDARY AT ZETA=CONSTANT IS HINGED  )                A1P00790
  947 FORMAT (37H0BOUNDARY AT THETA=CONSTANT IS HINGED )                A1P00800
  950  FORMAT (31H0 LINEAR NORMAL PRESSURE.   PO= E15.7,5H, DP= E15.7)  A1P00810
  951 FORMAT (33H0LINEAR TEMPERATURE GRADIENT. TF=E15.7,5H, TI=E15.7,   A1P00820
     1 5H, TO=E15.7, 5H, OC=E15.7)                                      A1P00830
  953 FORMAT (19H0 DEAD LOAD.   DLD=E15.7)                              A1P00840
  962 FORMAT (90H ROW COL     MX          MTHETA       MXTHETA        QX  A1P00850
     1   QTHETA                                                       )  A1P00860
  966 FORMAT (6A6)                                                      A1P00870
C     SET TAPE ASSIGNMENTS.                                             A1P00880
      KTAPE=15                                                          A1P00890
      MTAPE=7                                                           A1P00900
B     XMTP=000000002221                                                 A1P00910
B     XZTP=000000002223                                                 A1P00920
B     XNTP=000000001224                                                 A1P00930
      NTAPE=4                                                           A1P00940
      IZTAPE=3                                                          A1P00950
      REWIND KTAPE                                                      A1P00960
      REWIND MTAPE                                                      A1P00970
      REWIND NTAPE                                                      A1P00980
      REWIND IZTAPE                                                     A1P00990
B     BLNK=606060606060                                                 A1P01000
B     XLBL=606067606060                                                 A1P01010
      CALL WTAPE (XZTP, TEMP, 15000, 0)                                 A1P01020
C     READ AND WRITE INPUT DATA                                         A1P01030
      CALL CLOCK (TIM1)                                                 A1P01040
   82 READ INPUT TAPE 5, 8, RECORD                                      A1P01050
      WRITE OUTPUT TAPE 6, 1, RECORD                                    A1P01060
      READ INPUT TAPE 5, 7, IOPT1,IOPT2, IOPT3, IOPT4, IOPT5,IOPT6,IOPT7A1P01070
     1 , IOPT8                                                          A1P01080
      IOPT8 = IOPT4                                                     A1P01090
      IOPT7 = IOPT5                                                     A1P01100
      NSTOP=IOPT6                                                       A1P01110
```

```
      IOPT4 = 0.                                                        A1P01120
      IOPT5 = 0.                                                        A1P01130
      IOPT6 = 0.                                                        A1P01140
C     IOPT1=0   ISOTROPIC CYLINDER                                      A1P01150
C     IOPT1=1   ANISOTROPIC CYLINDER                                    A1P01160
C     IOPT2=0   SYMMETRY LINE AT THETA=0                                A1P01170
C     IOPT2=1   NO SYMMETRY LINE AT THETA=0.                            A1P01180
C     IOPT3=0   CONSTANT MESH SPACING                                   A1P01190
C     IOPT3=1   GRADED MESH SPACING IN ZETA DIRECTION                   A1P01200
C     IOPT 4 = 0 UNIFORM NORMAL PRESSURE                                A1P01210
C     IOPT 4 = 1 LINEAR NORMAL PRESSURE                                 A1P01220
C     IOPT 4 = 2 LINEAR TEMPERATURE GRADIENT                            A1P01230
C     IOPT 5 = 0 OMIT PRINT OUT OF STRAINS,CURVATURE CHANGE AND ROTATIONA1P01240
C     IOPT 5 = 1 PRINT STRAINS, ETC.                                    A1P01250
      READ INPUT TAPE 5, 2, ROW, COL, XH, XK                            A1P01260
      READ INPUT TAPE 5, 2, ZNU, RHO, THC, R1H                          A1P01270
      NROW=ROW                                                          A1P01280
      NCOL=COL                                                          A1P01290
      NC1=NCOL+1                                                        A1P01300
      NR1=NROW+1                                                        A1P01310
      NR3=3*(NROW+6)                                                    A1P01320
      WRITE OUTPUT TAPE 6,14, NROW, NCOL, XH, XK                        A1P01330
      WRITE OUTPUT TAPE 6, 15, ZNU, RHO, THC, R1H                       A1P01340
      IF(IOPT1) 40, 40, 42                                              A1P01350
   40 WRITE OUTPUT TAPE 6, 943                                          A1P01360
      D1B=0.                                                            A1P01370
      D1H=0.                                                            A1P01380
      T1H=0.                                                            A1P01390
      C1H=0.                                                            A1P01400
      GO TO 44                                                          A1P01410
   42 WRITE OUTPUT TAPE 6, 944                                          A1P01420
      READ INPUT TAPE 5, 2, D1B, D1H, T1H, C1H                          A1P01430
      WRITE OUTPUT TAPE 6, 934, D1B, D1H, T1H, C1H                      A1P01440
   44 CONTINUE                                                          A1P01450
      IF (IOPT8-1) 120,101,105                                          A1P01460
  101 READ INPUT TAPE 5, 2, PO, DP                                      A1P01470
      WRITE OUTPUT TAPE 6, 950, PO, DP                                  A1P01480
      GO TO 120                                                         A1P01490
  105 IF(IOPT8-2) 106,106,  108                                         A1P01500
```

```
106 READ INPUT TAPE 5, 2, TE, TI, TO, OC                          A1P01510
    WRITE OUTPUT TAPE 6, 951, TE, TI, TO, OC                      A1P01520
    GO TO 120                                                     A1P01530
108 READ INPUT TAPE 5,2, DDLD                                     A1P01540
    WRITE OUTPUT TAPE 6, 953, DDLD                                A1P01550
120 GDXH=XH                                                       A1P01560
    IF (IOPT4) 32, 32, 31                                         A1P01570
 31 READ INPUT TAPE 5, 2, (ROT(I), I=1, NCOL)                     A1P01580
    WRITE OUTPUT TAPE 6, 940, (ROT(I), I=1, NCOL)                 A1P01590
 32 CONTINUE                                                      A1P01600
    IF (IOPT5) 35, 35, 34                                         A1P01610
 34 WRITE OUTPUT TAPE 6, 946                                      A1P01620
 35 IF (IOPT6) 37, 37, 36                                         A1P01630
 36 WRITE OUTPUT TAPE 6, 947                                      A1P01640
 37 CONTINUE                                                      A1P01650
    IF (IOPT3) 23, 23, 22                                         A1P01660
 22 READ INPUT TAPE 5, 4, (MM(I), I=1,NROW)                       A1P01670
    WRITE OUTPUT TAPE 6, 920, (I, I=1, NROW)                      A1P01680
    WRITE OUTPUT TAPE 6, 921, (MM(I), I=1, NROW)                  A1P01690
    MM(NR1)=MM(NROW)                                              A1P01700
    CALL GRADE (0)                                                A1P01710
    GO TO 25                                                      A1P01720
 23 DO 24 J=1, 30                                                 A1P01730
 24 MM(J)=0                                                       A1P01740
 25 CONTINUE                                                      A1P01750
    IF (IOPT2) 26, 26, 27                                         A1P01760
 26 CONTINUE                                                      A1P01770
    NDIM=3*NROW-1                                                 A1P01780
    WRITE OUTPUT TAPE 6, 922                                      A1P01790
    NCRV1=1                                                       A1P01800
    GO TO 28                                                      A1P01810
 27 CONTINUE                                                      A1P01820
    NCRV1=2                                                       A1P01830
    NDIM=3*NROW                                                   A1P01840
    WRITE OUTPUT TAPE 6, 923                                      A1P01850
 28 NSM=NDIM-NROW                                                 A1P01860
    NSQ=72*NDIM                                                   A1P01870
    READ INPUT TAPE 5, 4, (MM(I), I=31, 35)                       A1P01880
    IF (MM(31)) 79, 79, 51                                        A1P01890
```

```
   51 READ INPUT TAPE 5, 966,((CILBL(I, J),I=1, 6), J=1, 4)          A1P01900
B     XXN=255151606060                                               A1P01910
      NEND=0                                                         A1P01920
      NCRV=MM(31)                                                    A1P01930
      NPTS=NCOL/26+1                                                 A1P01940
      NFLAG=0                                                        A1P01950
      CALL PLTLBL (DISP, STRSS, ORDLBL, ABLBL, BOND)                 A1P01960
      TH=0.                                                          A1P01970
      DELH=1./COL                                                    A1P01980
      DO 52 I=1, NC1                                                 A1P01990
      ABSC(I)=TH                                                     A1P02000
   52 TH=TH+DELH                                                     A1P02010
      TH=0.                                                          A1P02020
      DO 53 I=1, NR1                                                 A1P02030
      AORD(I)=TH                                                     A1P02040
      I0=NR1-I                                                       A1P02050
      I2=XMAXOF(I0-1,I)                                              A1P02060
      IF (MM(I2)-MM(I0+1)) 58, 58, 56                                A1P02070
   56 I0=I0+1                                                        A1P02080
   58 CONTINUE                                                       A1P02090
      DELX=XH/(2.**MM(I0))                                           A1P02100
   53 TH=TH+DELX                                                     A1P02110
      AORD (NR1+1)=TH                                                A1P02120
      DO 57 I=1, 6                                                   A1P02130
   57 AXLBL(I)=BLNK                                                  A1P02140
      AXLBL(3)=XLBL                                                  A1P02150
   79 CONTINUE                                                       A1P02160
      CALL COEFZ (0)                                                 A1P02170
      MFLAG=0                                                        A1P02180
      IF (KTIME) 81,81,400                                           A1P02190
   81 CONTINUE                                                       A1P02200
C     SPACE TAPES OVER FIRST ACCIDENT PRONE SECTION                  A1P02210
      CALL WTAPE (XNTP, TEMP, 15000, 0)                              A1P02220
      CALL WTAPE (XMTP, TEMP, 15000, 0)                              A1P02230
C     COMPUTE L, M,N AND  Z MATRICES OF FORWARD SWEEP                A1P02240
  400 KTIME=KTIME+1                                                  A1P02250
      N1=NSM                                                         A1P02260
      N2=NSM                                                         A1P02270
      N3=NSM                                                         A1P02280
```

```
      I=1                                                               A1P02290
      GO TO 405                                                         A1P02300
  401 CALL WTAPE (XZTP,Z1,N1,1)                                         A1P02310
      CALL RTAPE (XMTP,TMP, NSQ, 0)                                     A1P02320
      CALL MTX (YK, I, 2)                                               A1P02330
      IF (I-2) 405, 403, 402                                            A1P02340
  402 CALL BACK (XNTP)                                                  A1P02350
      CALL ZFRO (YL, NSQ)                                               A1P02360
      CALL RTAPE (XMTP, TMP, NSQ,1)                                     A1P02370
      CALL MTXS (TMP, YL, I, 1)                                         A1P02380
      CALL RTAPE (XMTP, TMP, NSQ,0)                                     A1P02390
      CALL ADDM (YK, YL, YK, -NSQ)                                      A1P02400
      CALL RTAPE (XNTP, YL, NSQ, 0)                                     A1P02410
  403 N1=NDIM                                                           A1P02420
      CALL RTAPE (XMTP, TMP, NSQ,1)                                     A1P02430
      CALL MATM  (YK, TMP, TMP,NDIM,N2, NDIM)                           A1P02440
      IF (I-2) 405, 405, 404                                            A1P02450
  404 CALL RTAPE (XNTP, YL, NSQ, 1)                                     A1P02460
      CALL MTXS (YL, TMP,I, 1)                                          A1P02470
  405 CALL MTX (YL, I, 3)                                               A1P02480
      IF (I-2) 408, 406, 406                                            A1P02490
  406 CALL ADDM (YL, TMP, YL,-NSQ)                                      A1P02500
      IF (I-NCOL) 407, 408, 408                                         A1P02510
  407 CALL RTAPE (XNTP, TMP, NSQ,0)                                     A1P02520
  408 CALL INVERT (YL, N1, ISING)                                       A1P02530
      IF (I-1) 414, 414, 410                                            A1P02540
  410 CALL MATM (YK, Z1, T2, NDIM, N2,1)                                A1P02550
      IF (I-NCOL) 411, 421, 421                                         A1P02560
  411 CALL  RTAPE (XNTP, TMP, NSQ, 1)                                   A1P02570
      CALL  MATM (YK, TMP,TMP,NDIM, N2, NDIM)                           A1P02580
  414 CALL  MTX (YK, I, 4)                                              A1P02590
      IF (I-2) 417, 416, 416                                            A1P02600
  416 CALL ADDM (YK, TMP, YK, -NSQ)                                     A1P02610
  417 IF (I-NCOL+1) 418, 419, 419                                       A1P02620
  418 CALL ZFRO (TMP,NSQ)                                               A1P02630
       CALL MTXS (YL, TMP, I, 5)                                        A1P02640
      CALL WTAPE (XNTP, TMP, NSQ,0)                                     A1P02650
  419 CALL MATM (YL, YK, YK, N1, N1, NDIM)                              A1P02660
      CALL WTAPE (XMTP, YK, NSQ, 0)                                     A1P02670
```

```
      IF (I-NCOL+1) 420, 421, 421                                A1P02680
  420 CALL WTAPE (XNTP, TMP, NSQ, I)                             A1P02690
      CALL BACK (XNTP)                                           A1P02700
  421 CALL CONS (T1,I)                                           A1P02710
      IF (I-1) 426, 426, 422                                     A1P02720
  422 CALL ADDM (T1, T2, T1, -NDIM)                              A1P02730
      IF (I-2) 426, 424, 423                                     A1P02740
  423 CALL MTXS (Z2, T2, I,-1)                                   A1P02750
  424 DO 425 J=1,NDIM                                            A1P02760
  425 Z2(J)=Z1(J)                                                A1P02770
      IF (I-NCOL) 426, 428, 428                                  A1P02780
  426 CALL WTAPE (XMTP, YK, NSQ, 1)                              A1P02790
      CALL BACK (XMTP)                                           A1P02800
      IF (I-2) 430, 429, 428                                     A1P02810
  428 CALL ADDM (T1, T2, T1,-NDIM)                               A1P02820
  429 CALL BACK (XMTP)                                           A1P02830
  430 CALL MATM (YL, T1, Z1, N1, N1, 1)                          A1P02840
      CALL WTAPE (XZTP, Z1, N1, 0)                               A1P02850
      IF (I-NCOL) 431, 450, 450                                  A1P02860
  431 IF (I-2) 434,433,432                                       A1P02870
  432 N3=NDIM                                                    A1P02880
  433 N2=NDIM                                                    A1P02890
  434 I=I+1                                                      A1P02900
      GO TO 401                                                  A1P02910
C     DECOMPOSITION COMPLETED .  BEGIN BACKWARD SWEEP.           A1P02920
  450  CALL WTAPE (XZTP, Z1, N1,1)                               A1P02930
      CALL BACK (XZTP)                                           A1P02940
      CALL BACK (XNTP)                                           A1P02950
      N4= (NCOL+3)*(NROW+6)*3                                    A1P02960
      CALL ZERO (TMP,N4)                                         A1P02970
  451 IF (I-NCOL) 452,454,454                                    A1P02980
  452 DO 453 J=I,NDIM                                            A1P02990
      XX1(J)=XX(J)                                               A1P03000
  453 XX(J)= Z1(J)                                               A1P03010
      CALL RTAPE (XMTP, YK, NSQ, 1)                              A1P03020
      CALL BACK (XMTP)                                           A1P03030
      IF (I-1) 454, 454, 4541                                    A1P03040
 4541 CALL BACK (XMTP)                                           A1P03050
  454 CALL RTAPE (XZTP, Z1, N1, 0)                               A1P03060
```

```
      CALL RTAPE (XZTP, Z1, N1, 1)                                      A1P03070
      IF (I-1) 4543, 4543, 4542                                         A1P03080
 4542 CALL BACK (XZTP)                                                  A1P03090
 4543 CALL BACK (XZTP)                                                  A1P03100
      IF (I-NCOL+1) 456,457,462                                         A1P03110
  456 CALL RTAPE (XNTP, YL, NSQ, 0)                                     A1P03120
  457 CALL MATM( YK, XX, T1, N1, NDIM, 1)                               A1P03130
      CALL ADDM (Z1, T1, Z1, -NDIM)                                     A1P03140
      IF (I-NCOL+1) 458,462,462                                         A1P03150
  458 CALL RTAPE (XNTP, YL, NSQ, 1)                                     A1P03160
      IF (I-1) 4591, 4591, 459                                          A1P03170
  459 CALL BACK (XNTP)                                                  A1P03180
 4591 CALL BACK (XNTP)                                                  A1P03190
      CALL MATM (YL, XX1, T1, N1, NDIM, 1)                              A1P03200
      CALL ADDM (Z1, T1, Z1, -NDIM)                                     A1P03210
  460 IF (I-2) 463,461,462                                              A1P03220
  461 N1=NSM                                                            A1P03230
  462  CALL RTAPE (XMTP, YK, NSQ, 0)                                    A1P03240
  463 CALL STORE (Z1, I)                                                A1P03250
      IF (I-2) 500, 464, 464                                            A1P03260
  464 I=I-1                                                             A1P03270
      GO TO 452                                                         A1P03280
  500 MFLAG=1                                                           A1P03290
      CALL BOUND (I1)                                                   A1P03300
      IOUT=51                                                           A1P03310
      NC2=NCOL+3                                                        A1P03320
      IF (IOPT2) 501,501, 502                                           A1P03330
  501 NR2=NROW+3                                                        A1P03340
      GO TO 503                                                         A1P03350
  502 NR2=NROW+6                                                        A1P03360
  503 DO 520 I=1, NC2                                                   A1P03370
      I3=I*(NROW+6)*3                                                   A1P03380
      I2=I3-1                                                           A1P03390
      I1=I2-1                                                           A1P03400
      IF (IOUT+NR2-50) 505, 505, 504                                    A1P03410
  504 WRITE OUTPUT TAPE 6, 1, RECORD                                    A1P03420
      WRITE OUTPUT TAPE 6, 17                                           A1P03430
      IOUT=6                                                            A1P03440
  505 DO 515 JJ=1, NR2                                                  A1P03450
```

```
      J=NROW-JJ+4                                                       A1P03460
      IF (J-NR1) 506, 511, 510                                          A1P03470
  506 IF (IOPT2) 507,507, 508                                           A1P03480
  507 IF (J-1) 512, 512, 510                                            A1P03490
  508 IF (J) 510, 511, 510                                              A1P03500
  510 WRITE OUTPUT TAPE 6, 930, I, J, TMP(I1), TMP(I2), TMP(I3)         A1P03510
      GO TO 514                                                         A1P03520
  511 WRITE OUTPUT TAPE 6, 931, I, J, TMP(I1), TMP(I2), TMP(I3)         A1P03530
      GO TO 514                                                         A1P03540
  512 WRITE OUTPUT TAPE 6, 932, I, J, TMP(I1), TMP(I2), TMP(I3)         A1P03550
  514 I1=I1-3                                                           A1P03560
      I2=I2-3                                                           A1P03570
      I3=I3-3                                                           A1P03580
  515 IOUT=IOUT+1                                                       A1P03590
  520 CONTINUE                                                          A1P03600
  521 IOUT=50                                                           A1P03610
      L=32                                                              A1P03620
      K=0                                                               A1P03630
      NNR=NR1+1                                                         A1P03640
      DO 5401 JJ=1, NNR                                                 A1P03650
      J=JJ-1                                                            A1P03660
      IF (J) 526, 526, 529                                              A1P03670
  526 IF (IOPT2) 5401, 5401, 529                                        A1P03680
  529 CONTINUE                                                          A1P03690
      IF (IOPT3) 537,537, 536                                           A1P03700
  536 CALL GRADE (J)                                                    A1P03710
  537 IF (MM(31)) 5378, 5378, 5370                                      A1P03720
 5370 IF (MM(L)-J) 5378, 5372, 5378                                     A1P03730
 5372 IF (L-35) 5374, 5374, 5378                                        A1P03740
 5374 L=L+1                                                             A1P03750
      K=K+1                                                             A1P03760
      K1=K                                                              A1P03770
      GO TO 5380                                                        A1P03780
 5378 K1=0                                                              A1P03790
 5380 DO 540 I=1, NC1                                                   A1P03800
      IF (IOUT-41) 539, 538, 538                                        A1P03810
  538 WRITE OUTPUT TAPE 6, 1, RECORD                                    A1P03820
      IOUT=0                                                            A1P03830
      IF (MFLAG) 532, 530, 531                                          A1P03840
```

```
531 WRITE OUTPUT TAPE 6, 20                                    A1P03850
    WRITE OUTPUT TAPE 6, 18                                    A1P03860
    GO TO 539                                                  A1P03870
530 WRITE OUTPUT TAPE 6, 20                                    A1P03880
    WRITE OUTPUT TAPE 6, 962                                   A1P03890
    GO TO 539                                                  A1P03900
532 WRITE OUTPUT TAPE 6, 939                                   A1P03910
    WRITE OUTPUT TAPE 6, 19                                    A1P03920
539 IOUT=IOUT+1                                                A1P03930
    CALL STRESS (I,J,K1)                                       A1P03940
540 CONTINUE                                                   A1P03950
5401 CONTINUE                                                  A1P03960
    IF (MFLAG) 999, 544, 541                                   A1P03970
541 MFLAG=0                                                    A1P03980
    GO TO 521                                                  A1P03990
544 WRITE OUTPUT TAPE 6, 1, RECORD                             A1P04000
    I0=0                                                       A1P04010
    I1=1                                                       A1P04020
    I2=4                                                       A1P04030
    WRITE OUTPUT TAPE 6, 936                                   A1P04040
    I=1                                                        A1P04050
    DO 560 JJ=1, NR1                                           A1P04060
    J=NR1+1-JJ                                                 A1P04070
550 WRITE OUTPUT TAPE 6, 937, J, I, (YK(I3), I3=I1, I2)        A1P04080
    I1=I1+4                                                    A1P04090
    I2=I1+3                                                    A1P04100
    IF (I-NCOL) 551, 552, 560                                  A1P04110
551 I=I+1                                                      A1P04120
    GO TO 550                                                  A1P04130
552 I=NC1                                                      A1P04140
    WRITE OUTPUT TAPE 6, 937, J, NC1, (YK(I3), I3=I1, I2)      A1P04150
    K1=8*(NC1+NR1)-3                                           A1P04160
    WRITE OUTPUT TAPE 6, 938, J, NC1, YK(K1)                   A1P04170
    I1=I1+4                                                    A1P04180
    I2=I1+3                                                    A1P04190
    GO TO 550                                                  A1P04200
560 CONTINUE                                                   A1P04210
    IF (IOPT2) 566,566, 562                                    A1P04220
562 WRITE OUTPUT TAPE 6, 937, I0, NC1,(YK(I3), I3=I1, I2)      A1P04230
```

```
      K1=K1+4                                                           A1P04240
      WRITE OUTPUT TAPE 6, 938, I0, NC1, YK(K1)                         A1P04250
      I1=I1+4                                                           A1P04260
      I2=I1+3                                                           A1P04270
      DO 565 II=1, NC1                                                  A1P04280
      I=NC1+1-II                                                        A1P04290
      WRITE OUTPUT TAPE 6, 937, I0, I, (YK(I3), I3=I1, I2)              A1P04300
      I1=I1+4                                                           A1P04310
      I2=I1+3                                                           A1P04320
  565 CONTINUE                                                          A1P04330
  566 IF (IOPT7) 999,999, 545                                           A1P04340
  545 MFLAG=-1                                                          A1P04350
      GO TO 521                                                         A1P04360
  999 CONTINUE                                                          A1P04370
   80 CALL CLOCK (TIM2)                                                 A1P04380
      TIME=TIM2-TIM1                                                    A1P04390
      TIM1=TIM2                                                         A1P04400
      PRINT 945, KTIME, TIME                                            A1P04410
      WRITE OUTPUT TAPE 6, 945, KTIME, TIME                             A1P04420
      IF (MM(31)) 1000, 1000, 601                                       A1P04430
  601 DO 650 K=1,3                                                      A1P04440
      WRITE TAPE KTAPE, RECORD                                          A1P04450
      WRITE TAPE KTAPE, NC1, NCRV, NPTS, NEND, NFLAG                    A1P04460
      WRITE TAPE KTAPE, ABLBL,  (ORDLBL(M,K),M=1,6), DISP               A1P04470
      WRITE TAPE KTAPE, CILBL                                           A1P04480
      DO 610 I=1, NC1                                                   A1P04490
      WRITE TAPE KTAPE, ABSC(I)                                         A1P04500
  610 CONTINUE                                                          A1P04510
      L=32                                                              A1P04520
      L3=31+MM(31)                                                      A1P04530
      DO 620 J=0, NR1                                                   A1P04540
      IF (MM(L)-J) 620, 611, 620                                        A1P04550
  611 I1=3*(J+2)+K                                                      A1P04560
      DO 615 I=1, NC1                                                   A1P04570
      WRITE TAPE KTAPE, TMP(I1)                                         A1P04580
  615 I1=I1+NR3                                                         A1P04590
      L=L+1                                                             A1P04600
      IF (L-L3) 620, 620, 650                                           A1P04610
  620 CONTINUE                                                          A1P04620
```

```
650 CONTINUE                                                          A1P04630
    DO 720 K=1, 4                                                     A1P04640
    K1=K+3                                                            A1P04650
    WRITE TAPE KTAPE, RECORD                                          A1P04660
    WRITE TAPE KTAPE, NC1, NCRV, NPTS, NEND, NFLAG                    A1P04670
    WRITE TAPE KTAPE, ABLBL, (ORDLBL(M, K1), M=1, 6), STRSS           A1P04680
    WRITE TAPE KTAPE, CILBL                                           A1P04690
    DO 662 I=1, NC1                                                   A1P04700
    WRITE TAPE KTAPE, ABSC(I)                                         A1P04710
662 CONTINUE                                                          A1P04720
    DO 660 M=1, NCRV                                                  A1P04730
    DO 660 I=1, NC1                                                   A1P04740
660 WRITE TAPE KTAPE, YL(K,M,I)                                       A1P04750
720 CONTINUE                                                          A1P04760
    DO 740 K1=1, 4                                                    A1P04770
    K=K1+7                                                            A1P04780
    NCRV=NCRV1                                                        A1P04790
    NCR=0                                                             A1P04800
    NCX=NC1                                                           A1P04810
725 WRITE TAPE KTAPE, RECORD                                          A1P04820
    WRITE TAPE KTAPE, NCX, NCRV, NPTS, NEND, NFLAG                    A1P04830
    IF (NCR) 723, 723, 724                                            A1P04840
723 CONTINUE                                                          A1P04850
    WRITE TAPE KTAPE, ABLBL, (ORDLBL(M,K), M=1, 6), BOND              A1P04860
    GO TO 726                                                         A1P04870
724 CONTINUE                                                          A1P04880
    WRITE TAPE KTAPE, AXLBL, (ORDLBL(M, K), M=1, 6), BOND             A1P04890
726 CONTINUE                                                          A1P04900
    CALL PLBL (CBLBL, NCR)                                            A1P04910
    WRITE TAPE KTAPE, CBLBL                                           A1P04920
    IF (NCR) 727, 727, 729                                            A1P04930
727 DO 728 I=1, NC1                                                   A1P04940
728 WRITE TAPE KTAPE, ABSC(I)                                         A1P04950
    I1=K1                                                             A1P04960
    GO TO 731                                                         A1P04970
729 DO 730 I=1, NR1                                                   A1P04980
730 WRITE TAPE KTAPE, AORD(I)                                         A1P04990
731 CONTINUE                                                          A1P05000
    KAD=4                                                             A1P05010
```

```
      DO 735 M=1, NCRV                                          A1P05020
      DO 732 L=1, NCX                                           A1P05030
      WRITE TAPE KTAPE, YK(I1)                                  A1P05040
  732 I1=I1+KAD                                                 A1P05050
      I1=4*(NC1+NC1+NR1)+K1                                     A1P05060
  735 KAD=-4                                                    A1P05070
      IF (NCR) 736, 736, 740                                    A1P05080
  736 NCR=1                                                     A1P05090
      I1=4*NC1+K1                                               A1P05100
      KAD=4                                                     A1P05110
      NCX=NR1                                                   A1P05120
      NCRV=1                                                    A1P05130
      IF (K1-4) 715, 714, 714                                   A1P05140
  714 NEND=NSTOP                                                A1P05150
  715 CONTINUE                                                  A1P05160
      GO TO 725                                                 A1P05170
  740 CONTINUE                                                  A1P05180
      WRITE TAPE KTAPE, XXN                                     A1P05190
      BACKSPACE KTAPE                                           A1P05200
      CALL RESET                                                A1P05210
      IF (NSTOP) 82, 82, 1001                                   A1P05220
 1001 CONTINUE                                                  A1P05230
      CALL CHAIN (2,2)                                          A1P05240
 1000 CALL RESET                                                A1P05250
      GO TO 82                                                  A1P05260
      END                                                       A1P05270
*     FORTRAN                                                   A1P05280
      SUBROUTINE ADDM (X, Y, Z, M)                              A1P05290
      DIMENSION X(3600), Y(3600), Z(3600)                       A1P05300
      IF (M) 20,1,1                                             A1P05310
    1 DO 10 I=1,M                                               A1P05320
   10 Z(I)= X(I)+Y(I)                                           A1P05330
   11 GO TO 50                                                  A1P05340
   20 M=-M                                                      A1P05350
      DO 25 I=1,M                                               A1P05360
   25 Z(I)= X(I)-Y(I)                                           A1P05370
   50 RETURN                                                    A1P05380
      END                                                       A1P05390
*     FORTRAN                                                   A1P05400
```

```
      SUBROUTINE BOUND (II)                                             A1P05410
      COMMON NDIM, NROW, NCOL, MM, I1, KP1, KP2, KM1, KM2, MFLAG, B,C   A1P05420
      COMMON IOPT1, IOPT2, IOPT3, IOPT4, IOPT5, IOPT6, IOPT7, IOPT8     A1P05430
      COMMON A1, A2, A3, A4, A5, A6                                     A1P05440
      COMMON  B1, B2, B3, B4, B5, B6, B7, C1, C2, C3, C4, C5, C6, C7,C8,A1P05450
     1 C9, C10, C11, C12                                                A1P05460
      COMMON TMP, YK, YL                                                A1P05470
      DIMENSION TMP (5184), YK(5184), YL(5184)                          A1P05480
      DIMENSION MM(35)                                                  A1P05490
      II=II                                                             A1P05500
      I1=0                                                              A1P05510
      NR1=NROW+1                                                        A1P05520
      NC1=NCOL+1                                                        A1P05530
      N5=I2*270                                                         A1P05540
      CALL ZERO (YK, N5)                                                A1P05550
      IF (IOPT3) 401, 401, 400                                          A1P05560
  400 CALL GRADE(I)                                                     A1P05570
  401 CONTINUE                                                          A1P05580
      IF (IOPT2) 499, 499, 450                                          A1P05590
  450 J=0                                                               A1P05600
      DO 4001 K=37, 40                                                  A1P05610
 4001 MM(K)=0                                                           A1P05620
      DO 460 I2=1, NCOL                                                 A1P05630
      I1=I1+1                                                           A1P05640
      CALL EQ1 (YK, I1,I2, J, 1)                                        A1P05650
      IF (I2-1) 453, 453, 451                                           A1P05660
  451 I1=I1+1                                                           A1P05670
      CALL EQ2 (YK, I1,I2, J, 1)                                        A1P05680
  453 I1=I1+1                                                           A1P05690
      YK(I1+2970)=C                                                     A1P05700
      CALL EQ3 (YK, I1,I2, J, 1)                                        A1P05710
  460 CONTINUE                                                          A1P05720
  456 I1=I1+1                                                           A1P05730
      CALL EQ2 (YK, I1,I2, J, 1)                                        A1P05740
      I1=I1+1                                                           A1P05750
      CALL EQ1 (YK, I1,I2, J, 1)                                        A1P05760
      I1=I1+1                                                           A1P05770
      YK(I1+2970)=C                                                     A1P05780
      CALL EQ3 (YK, I1,I2, J, 1)                                        A1P05790
```

```
      IF (IOPT3) 499, 499, 498                                          A1P05800
  498 CALL GRADE (I)                                                    A1P05810
  499 J=1                                                               A1P05820
      DO 515 I2=1, NC1                                                  A1P05830
      I=NC1+1-I2                                                        A1P05840
  501 IF (IOPT2) 502, 502, 503                                          A1P05850
  502 IF (J-1) 504, 504, 503                                            A1P05860
  503 I1=I1+1                                                           A1P05870
      CALL EQ1 (YK, I1, I, J, 1)                                        A1P05880
  504 IF (I-1) 506, 506, 505                                            A1P05890
  505 I1=I1+1                                                           A1P05900
      CALL EQ2 (YK, I1, I, J, 1)                                        A1P05910
  506 IF (J-NR1) 508, 507, 507                                          A1P05920
  507 IF(I-NC1) 508, 509, 509                                           A1P05930
  508 I1=I1+1                                                           A1P05940
      YK(I1+2970)=C                                                     A1P05950
      CALL EQ3 (YK, I1, I, J, 1)                                        A1P05960
  509 IF (J-NR1) 510, 515, 515                                          A1P05970
  510 J=J+1                                                             A1P05980
      IF (IOPT3) 512, 512, 514                                          A1P05990
  514 CALL GRADE(J)                                                     A1P06000
  512 IF (J-NR1) 501, 511, 511                                          A1P06010
  511 I1=I1+1                                                           A1P06020
      CALL EQ2 (YK, I1, I, J, 1)                                        A1P06030
      I1=I1+1                                                           A1P06040
      CALL EQ1 (YK, I1, I, J, 1)                                        A1P06050
      I1=I1+1                                                           A1P06060
      YK(I1+2970)=C                                                     A1P06070
      CALL EQ3 (YK, I1, I, J, 1)                                        A1P06080
  515 CONTINUE                                                          A1P06090
C     BOUNDARY EQUATIONS FORMED IN YK                                   A1P06100
      CALL OROSIM (YK,I1,5)                                             A1P06110
      CALL STORE (YL, 0)                                                A1P06120
      RETURN                                                            A1P06130
      END                                                               A1P06140
*     FORTRAN                                                           A1P06150
*     LIST                                                              A1P06160
      SUBROUTINE CF(I, J, MF, K, AA, X)                                 A1P06170
      DIMENSION X(72, 72)                                               A1P06180
```


LOCKHEED MISSILES & SPACE COMPANY

```
      COMMON NDIM, NROW, NCOL, MM, I1, KP1, KP2, KM1, KM2, MFLAG, B,C   A1P06190
      COMMON IOPT1, IOPT2, IOPT3, IOPT4, IOPT5, IOPT6, IOPT7, IOPT8     A1P06200
      COMMON A1, A2, A3, A4, A5, A6                                      A1P06210
      COMMON  B1, B2, B3, B4, B5, B6, B7, C1, C2, C3, C4, C5, C6, C7,C8,A1P06220
     1 C9, C10, C11, C12                                                 A1P06230
      COMMON TMP, YK, YL                                                 A1P06240
      COMMON ZNU, RHO, THC, R1H, D1B, D1H, T1H, C1H                      A1P06250
      COMMON XH,XK, GDXH, PO, DP                                         A1P06260
      COMMON TE, TI, TO, OC, TC, TD, DDLD                                A1P06270
      COMMON ROT                                                         A1P06280
      DIMENSION TMP (5184), YK(5184), YL(5184)                           A1P06290
      DIMENSION MM(35)                                                   A1P06300
      DIMENSION ROT (80)                                                 A1P06310
C     COMPUTE COEFFICIENT OF KTH UNKNOWN FOR MESH PT I,J.                A1P06320
      I2=I                                                               A1P06330
      J2=J                                                               A1P06340
      M=MF                                                               A1P06350
      NC1=NCOL+1                                                         A1P06360
      NR1=NROW+1                                                         A1P06370
       IF (M) 110, 100, 120                                              A1P06380
  110 IF (M+1) 111, 112, 112                                             A1P06390
  111 J2=J2-1                                                            A1P06400
      M=0                                                                A1P06410
      GO TO 100                                                          A1P06420
  112 FCTR=.5                                                            A1P06430
      J4=J2-1                                                            A1P06440
      GO TO 101                                                          A1P06450
  120 IF (M-1) 122, 122, 121                                             A1P06460
  121 J2=J2+1                                                            A1P06470
      M=0                                                                A1P06480
      GO TO 100                                                          A1P06490
  122 FCTR=.5                                                            A1P06500
      J4=J2+1                                                            A1P06510
      GO TO 101                                                          A1P06520
  100 FCTR=1.                                                            A1P06530
  101 IF (I2-1) 2, 4, 6                                                  A1P06540
C     COL I2 IS LEFT OF X-AXIS. REFLECT OVER SYMMETRY LINE. CHANGE SIGN A1P06550
C     IF K=2                                                             A1P06560
    2 I2=-I2+2                                                           A1P06570
```

```
      IF (K-2) 6, 3, 6                                                  A1P06580
    3 FCTR=-FCTR                                                        A1P06590
      GO TO 6                                                           A1P06600
C     COL I2 IS X-AXIS. OMIT COEFFICIENT IF K=2                         A1P06610
    4 IF (K-2) 6, 99, 6                                                 A1P06620
    6 IF (J2-NR1) 14, 99, 7                                             A1P06630
    7 IF (J2-NR1-1) 8, 8, 11                                            A1P06640
    8 IF (K-2) 11, 11, 9                                                A1P06650
    9 IF (I2-NC1) 10, 99, 11                                            A1P06660
C     ROW J2 IS ONE BEYOND BOUNDARY. REFLECT W.                         A1P06670
   10 J2=J2-2                                                           A1P06680
  201 IF (IOPT5) 210, 210, 205                                          A1P06690
  210 IF (MFLAG) 50, 50, 212                                            A1P06700
  212 IF (IOPT4) 50, 50, 214                                            A1P06710
  214 CONTINUE                                                          A1P06720
      YK(I1+2970)=YK(I1+2970)+2.*AA*FCTR*ROT(I2)*XH/2.**MM(NROW)        A1P06730
      GO TO 50                                                          A1P06740
   11 J2=NR1                                                            A1P06750
   12 IF (I2-NC1) 80, 99, 13                                            A1P06760
   13 I2=NC1                                                            A1P06770
      GO TO 80                                                          A1P06780
   14 IF (IOPT2) 15, 15, 19                                             A1P06790
   15 IF (J2-1) 16, 18, 25                                              A1P06800
   16 J2=-J2+2                                                          A1P06810
      IF (K-1) 17, 17, 25                                               A1P06820
   17 FCTR=-FCTR                                                        A1P06830
      GO TO 25                                                          A1P06840
   18 IF (K-1) 99, 99, 25                                               A1P06850
   19 IF (J2) 20, 99, 25                                                A1P06860
   20 IF (J2+1) 24, 21, 21                                              A1P06870
   21 IF (K-2) 24, 24, 22                                               A1P06880
   22 IF (I2-NC1) 23, 99, 24                                            A1P06890
   23 J2=1                                                              A1P06900
      GO TO 201                                                         A1P06910
   24 J2=0                                                              A1P06920
      GO TO 12                                                          A1P06930
   25 IF (I2-NC1) 50, 99, 26                                            A1P06940
   26 IF (I2-NC1-1) 27, 27, 13                                          A1P06950
   27 IF (K-2) 13, 13, 28                                               A1P06960
```

```
C       COL I2 IS ONE BEYOND BOUNDARY. REFLECT W. CHANGE SIGN IF HINGED    A1P06970
   28   I2=I2-2                                                            A1P06980
        IF (IOPT6) 50, 50, 205                                             A1P06990
  205   FCTR=-FCTR                                                         A1P07000
   50   J1=INDX(I2, J2, K)                                                 A1P07010
        IF (MFLAG) 51, 51, 52                                              A1P07020
   51   X(I1, J1)=X(I1,J1)+AA*FCTR                                         A1P07030
  125   IF (M) 130, 99, 130                                                A1P07040
   52   YK(I1+2970)=YK(I1+2970)-AA*FCTR*TMP(J1)                            A1P07050
        GO TO 125                                                          A1P07060
   80   J1=INDX(I2, J2, K)                                                 A1P07070
        J3=(J1+5-I1)*270+I1                                                A1P07080
        YK(J3)=YK(J3)+AA*FCTR                                              A1P07090
        IF (M) 135, 99, 135                                                A1P07100
   99   RETURN                                                             A1P07110
  130   J2=J4                                                              A1P07120
        M=0                                                                A1P07130
        GO TO 50                                                           A1P07140
  135   J2=J4                                                              A1P07150
        M=0                                                                A1P07160
        GO TO 80                                                           A1P07170
        END                                                                A1P07180
*       FORTRAN                                                            A1P07190
        SUBROUTINE COEFZ (M)                                               A1P07200
        COMMON NDIM, NROW, NCOL, MM, MFLAG, B, C                           A1P07210
        COMMON IOPT1, IOPT2, IOPT3, IOPT4, IOPT5, IOPT6, IOPT7, IOPT8      A1P07220
        COMMON A1, A2, A3, A4, A5, A6                                      A1P07230
        COMMON  B1, B2, B3, B4, B5, B6, B7, C1, C2, C3, C4, C5, C6, C7,C8,A1P07240
      1 C9, C10, C11, C12                                                  A1P07250
        COMMON  TMP, YK, YL                                                A1P07260
        COMMON ZNU, RHO, THC, R1H, D1B, D1H, T1H, C1H                      A1P07270
        COMMON XXH,XK,GDXH, PO, DP                                         A1P07280
        COMMON TE, TI, TO, OC, TC, TD, DDLD                                A1P07290
        COMMON ROT                                                         A1P07300
        COMMON FX, FNU, FTX, SC, DX, DTX, DNU                              A1P07310
        DIMENSION ROT (80)                                                 A1P07320
        DIMENSION MM(40)                                                   A1P07330
        DIMENSION TMP (5184), YK(5184), YL(5184)                           A1P07340
        IF (M) 50, 50, 10                                                  A1P07350
```

```
   10 XH=XXH/(2.**M)                                                    A1P07360
      GO TO 51                                                          A1P07370
   50 XH=XXH                                                            A1P07380
   51 CONTINUE                                                          A1P07390
      IF (IOPT4) 6, 6, 5                                                A1P07400
    5 C=0.                                                              A1P07410
      GO TO 7                                                           A1P07420
    6 C=1.                                                              A1P07430
    7 CONTINUE                                                          A1P07440
      TC=0.                                                             A1P07450
      TD=0.                                                             A1P07460
      ZK=1./(12.*R1H**2)                                                A1P07470
      IF (IOPT8-2) 20, 12, 15                                           A1P07480
   12 ZT1= .5*(TE+TI) -TO                                               A1P07490
      ZT2=R1H*(TE-TI)                                                   A1P07500
      ZT3= TI-TO                                                        A1P07510
      TC=OC*(ZT1/(1.-ZNU)+T1H*D1B*ZT3)                                  A1P07520
      TD=OC*(ZT2/(12.*R1H**2*(1.-ZNU))-C1H*T1H*D1B*ZT3/R1H)             A1P07530
      C= OC*(ZT1/(1.-ZNU)+T1H*D1B*ZT3)                                  A1P07540
      GO TO 20                                                          A1P07550
   15 B=1.                                                              A1P07560
      C=1.                                                              A1P07570
   20 CONTINUE                                                          A1P07580
C     COMPUTE CONSTANTS                                                 A1P07590
      TP1= (1.-ZNU*ZNU)                                                 A1P07600
      TP2= RHO/THC                                                      A1P07610
      TP3= TP2**2                                                       A1P07620
      EX= (1.+T1H*D1B*TP1)/TP1                                          A1P07630
      ENU=  ZNU/TP1                                                     A1P07640
      ETX= 1./(2.*(1.+ZNU))                                             A1P07650
      C1R=C1H/R1H                                                       A1P07660
      T1R=T1H/R1H                                                       A1P07670
      SC=C1R*T1H*D1B                                                    A1P07680
      DX = ZK/TP1*(1.+T1H*D1B*(D1H**2+12.*C1H**2)*TP1)                  A1P07690
      DTX= ZK/(1.+ZNU)*(1.+2.*T1H*D1H*D1H*D1B)                          A1P07700
      DNU= ZNU*ZK/TP1                                                   A1P07710
      YA1= EX*TP3                                                       A1P07720
      YA2= ETX/THC**2                                                   A1P07730
      YA3= TP2/THC*(ENU+ETX)                                            A1P07740
```

```
      YA4= ENU*TP2                                                      A1P07750
      YA5= SC*TP2**3                                                    A1P07760
      YB2= TP3*(ETX+2.*DTX)                                             A1P07770
      YB3= (EX+DX-2.*SC)/THC**2                                         A1P07780
      YB4=-TP3/THC*(DNU+2.*DTX)                                         A1P07790
      YB5=-(DX-SC)/THC**3                                               A1P07800
      YB6= (EX-SC)/THC                                                  A1P07810
      YC1= +ENU*TP2                                                     A1P07820
      YC2= +YB4                                                         A1P07830
      YC3= +YB5                                                         A1P07840
      YC4= +YB6                                                         A1P07850
      YC5= +DX*TP3**2                                                   A1P07860
      YC6= +2.*(DNU+DTX)*TP3/THC**2                                     A1P07870
      YC7= +DX/THC**4                                                   A1P07880
      YC8= +EX                                                          A1P07890
      YC9= +SC*TP2**3                                                   A1P07900
      YC10=+2.*SC/THC**2                                                A1P07910
      A1=YA1/XH**2                                                      A1P07920
      A3=YA2/XK**2                                                      A1P07930
      A2=-2.*(A1+A3)                                                    A1P07940
      A4=YA3/(4.*XH*XK)                                                 A1P07950
      A5=YA4/(2.*XH)-YA5/XH**3                                          A1P07960
      A6=YA5/(2.*XH**3)                                                 A1P07970
      B1= A4                                                            A1P07980
      B2= YB2/XH**2                                                     A1P07990
      B4= YB3/XK**2                                                     A1P08000
      B3= -2.*(B2+B4)                                                   A1P08010
      B6= YB4/(2.*XH**2*XK)                                             A1P08020
      B7= YB5/(2.*XK**3)                                                A1P08030
      B5= -2.*(B6+B7)+YB6/(2.*XK)                                       A1P08040
      C12=YC9/(2.*XH**3)                                                A1P08050
      C1= YC1/(2.*XH)-2.*C12                                            A1P08060
      C2= -YC3/XK**3                                                    A1P08070
      C5=  YC2/(2.*XH**2*XK)                                            A1P08080
      C3=  -2.*C5-C2+YC4/(2.*XK)                                        A1P08090
      C4= -C3-4.*C2                                                     A1P08100
      C6= YC5/XH**4                                                     A1P08110
      C9= YC6/(XH*XK)**2                                                A1P08120
      C10=YC7/(XK**4)                                                   A1P08130
```

```
      C7= -(4.*C6+2.*C9)                                                A1P08140
      C8= -2.*(C9+2.*C10)+YC10/XK**2                                    A1P08150
      C11= 6.*(C6+C10)+4.*C9-2.*YC10/XK**2+YC8                          A1P08160
      CALL NORM (A1, A, 6)                                              A1P08170
      CALL NORM (B1, B, 7)                                              A1P08180
      CALL NORM (C1, C, 12)                                             A1P08190
      RETURN                                                            A1P08200
      END                                                               A1P08210
*     FORTRAN                                                           A1P08220
      SUBROUTINE CONS (X, I)                                            A1P08230
      COMMON NDIM, NROW, NCOL, MM, MFLAG, B, C                          A1P08240
      COMMON IOPT1, IOPT2, IOPT3, IOPT4, IOPT5, IOPT6, IOPT7, IOPT8     A1P08250
      COMMON A1, A2, A3, A4, A5, A6                                     A1P08260
      COMMON  B1, B2, B3, B4, B5, B6, B7, C1, C2, C3, C4, C5, C6, C7,C8,A1P08270
     1 C9, C10, C11, C12                                                A1P08280
      COMMON  TMP, YK, YL                                               A1P08290
      COMMON ZNU, RHO, THC, RIH, DIB, DIH, TIH, CIH                     A1P08300
      COMMON XH,XK, GDXH, PO, DP                                        A1P08310
      COMMON TE, TI, TO, OC, TC, TD, DDLD                               A1P08320
      COMMON ROT                                                        A1P08330
      DIMENSION TMP (5184), YK(5184), YL(5184)                          A1P08340
      DIMENSION ROT (80)                                                A1P08350
      DIMENSION X(72)                                                   A1P08360
      DIMENSION MM(40)                                                  A1P08370
    3 DO 5 J=1, NDIM                                                    A1P08380
    5 X(J)=0.                                                           A1P08390
      TH= THC/FLOATF(NCOL)*FLOATF(I-1)                                  A1P08400
      Z=1.                                                              A1P08410
      DO 40 J=1, NROW                                                   A1P08420
      IF (IOPT3) 7, 7, 6                                                A1P08430
    6 CALL GRADE (J)                                                    A1P08440
    7 I1=INDX(I, J, 3)                                                  A1P08450
      IF (IOPT8-1) 10, 15, 30                                           A1P08460
   10 X(I1)=C                                                           A1P08470
      GO TO 40                                                          A1P08480
   15 IF(MM(39)) 25,25,20                                               A1P08490
   20 Z=Z-GDXH                                                          A1P08500
   25 Z=Z-GDXH                                                          A1P08510
      X(I1)=C*(PO+DP*Z)                                                 A1P08520
```

```
      GO TO 40                                                          A1P08530
   30 IF(IOPT8-2) 10, 10, 35                                            A1P08540
   35 IF(I-1) 39, 39, 36                                                A1P08550
   36 X(I1-1)=-B*DDLD*SINF(TH)                                          A1P08560
   39 X(I1)=-C*DDLD*COSF(TH)                                            A1P08570
   40 CONTINUE                                                          A1P08580
      IF (IOPT4) 99, 99, 12                                             A1P08590
   12 X(I1)=X(I1)+2.*C6*XH*ROT(I)/2.**MM(NROW)                          A1P08600
   99 RETURN                                                            A1P08610
      END                                                               A1P08620
*     FORTRAN                                                           A1P08630
*     LIST                                                              A1P08640
      FUNCTION DEF (II, JJ, KK, MF)                                     A1P08650
      COMMON NDIM, NROW, NCOL, MM, MFLAG, B, C                          A1P08660
      COMMON IOPT1, IOPT2, IOPT3, IOPT4, IOPT5, IOPT6,IOPT7,IOPT8       A1P08670
      COMMON A1, A2, A3, A4, A5, A6                                     A1P08680
      COMMON  B1, B2, B3, B4, B5, B6, B7, C1, C2, C3, C4, C5, C6, C7,C8,A1P08690
     1 C9, C10, C11, C12                                                A1P08700
      COMMON  TMP, YK, YL                                               A1P08710
      DIMENSION TMP (5184), YK(5184), YL(5184)                          A1P08720
      DIMENSION  MM(40)                                                 A1P08730
      N2=3*(NROW+6)                                                     A1P08740
      I=II                                                              A1P08750
      J=JJ                                                              A1P08760
      K=KK                                                              A1P08770
      M=MF                                                              A1P08780
      IF (M) 60, 50, 70                                                 A1P08790
   60 IF (M+1) 61, 62, 62                                               A1P08800
   61 J=J-1                                                             A1P08810
      M=0                                                               A1P08820
      GO TO 50                                                          A1P08830
   62 J2=J-1                                                            A1P08840
      GO TO 50                                                          A1P08850
   70 IF (M-1) 72, 72, 71                                               A1P08860
   71 J=J+1                                                             A1P08870
      M=0                                                               A1P08880
      GO TO 50                                                          A1P08890
   72 J2=J+1                                                            A1P08900
   50 SIGN=1.                                                           A1P08910
```

```
      IF (I-1) 1, 5, 5                                                  A1P08920
    1 I=2-I                                                             A1P08930
      IF (K-2) 5, 2, 5                                                  A1P08940
    2 SIGN=-1.                                                          A1P08950
    5 IF (IOPT2) 6, 6, 12                                               A1P08960
    6 IF (J-1) 7, 12, 12                                                A1P08970
    7 J=2-J                                                             A1P08980
      IF (K-1)  8,8, 12                                                 A1P08990
    8 SIGN=-1.                                                          A1P09000
   12 I2= (I-1)*N2+3*J+K+6                                              A1P09010
      IF (M) 16, 13, 16                                                 A1P09020
   13 IF (SIGN) 14, 15, 15                                              A1P09030
   14 DEF=-TMP(I2)                                                      A1P09040
      GO TO 99                                                          A1P09050
   15 DEF=TMP(I2)                                                       A1P09060
      GO TO 99                                                          A1P09070
   16 I3=(I-1)*N2+3*J2+K+6                                              A1P09080
      DEF=SIGN*(TMP(I2)+TMP(I3))/2.                                     A1P09090
   99 RETURN                                                            A1P09100
      END                                                               A1P09110
*     FORTRAN                                                           A1P09120
      SUBROUTINE EQ1 (X, II1, II, JJ, MX)                               A1P09130
      COMMON NDIM, NROW, NCOL, MM, K0, KP1, KP2, KM1, KM2, MFLAG, B,C   A1P09140
      COMMON IOPT1, IOPT2, IOPT3, IOPT4, IOPT5, IOPT6, IOPT7, IOPT8     A1P09150
      COMMON A1, A2, A3, A4, A5, A6                                     A1P09160
C     COMPUTE COEFFICIENTS FOR EQUATION ONE FOR MESH PT I,J             A1P09170
      DIMENSION MM(35)                                                  A1P09180
      I1=II1                                                            A1P09190
      I=II                                                              A1P09200
      J=JJ                                                              A1P09210
      M=MX                                                              A1P09220
      GO TO (30, 20, 30, 40, 50), M                                     A1P09230
   20 CONTINUE                                                          A1P09240
      I1=0                                                              A1P09250
      CALL CF (I-1,J,I1,1,A3, X)                                        A1P09260
      I1=KM1                                                            A1P09270
      CALL CF (I-1,J-1,I1,2,-A4, X)                                     A1P09280
      I1=KP1                                                            A1P09290
      CALL CF (I-1,J+1,I1,2, A4, X)                                     A1P09300
```

```
      GO TO 50                                                          A1P09310
   30 CONTINUE                                                          A1P09320
      I1=0                                                              A1P09330
      CALL CF (I, J, I1, 1, A2, X)                                      A1P09340
      I1=KM1                                                            A1P09350
      CALL CF (I,J-1,I1,1,A1, X)                                        A1P09360
      CALL CF (I, J-1, I1,3, A5, X)                                     A1P09370
      I1=KP1                                                            A1P09380
      CALL CF (I,J+1,I1,1,A1, X)                                        A1P09390
      CALL CF (I, J+1, I1,3,-A5, X)                                     A1P09400
      I1=KM2                                                            A1P09410
      CALL CF (I, J-2, I1, 3, A6, X)                                    A1P09420
      I1=KP2                                                            A1P09430
      CALL CF (I, J+2, I1, 3,-A6, X)                                    A1P09440
      IF (MFLAG) 50, 50, 40                                             A1P09450
   40 CONTINUE                                                          A1P09460
      I1=0                                                              A1P09470
      CALL CF (I+1,J,I1,1,A3, X)                                        A1P09480
      I1=KM1                                                            A1P09490
      CALL CF (I+1,J-1,I1,2, A4, X)                                     A1P09500
      I1=KP1                                                            A1P09510
      CALL CF (I+1,J+1,I1,2,-A4, X)                                     A1P09520
   45 IF (I-1) 20, 20, 46                                               A1P09530
   46 IF (MFLAG) 50, 50, 20                                             A1P09540
   50 RETURN                                                            A1P09550
      END                                                               A1P09560
*     FORTRAN                                                           A1P09570
      SUBROUTINE EQ2 (X, II1, II, JJ, MX)                               A1P09580
C     COMPUTE EQUATION TWO FOR MESH PT I, J.                            A1P09590
      COMMON NDIM, NROW, NCOL, MM, K0, KP1, KP2, KM1, KM2, MFLAG, B,C   A1P09600
      COMMON IOPT1, IOPT2, IOPT3, IOPT4, IOPT5, IOPT6, IOPT7, IOPT8     A1P09610
      COMMON A1, A2, A3, A4, A5, A6                                     A1P09620
      COMMON  B1, B2, B3, B4, B5, B6, B7, C1, C2, C3, C4, C5, C6, C7,C8,A1P09630
     1 C9, C10, C11, C12                                                A1P09640
      DIMENSION MM(35)                                                  A1P09650
      I1=II1                                                            A1P09660
      I=II                                                              A1P09670
      J=JJ                                                              A1P09680
      M=MX                                                              A1P09690
```

```
      GO TO (30, 20, 30, 40, 50), M                                    A1P09700
   20 CONTINUE                                                         A1P09710
      I1=0                                                             A1P09720
      CALL CF(I-1,J, I1,2,  B4, X)                                     A1P09730
      CALL CF(I-1,J, I1,3, -B5, X)                                     A1P09740
      I1=KM1                                                           A1P09750
      CALL CF(I-1,J-1,I1,3,-B6, X)                                     A1P09760
      CALL CF(I-1,J-1,I1,1,-B1, X)                                     A1P09770
      I1=KP1                                                           A1P09780
      CALL CF(I-1,J+1,I1,1, B1, X)                                     A1P09790
      CALL CF(I-1,J+1,I1,3,-B6, X)                                     A1P09800
      GO TO 50                                                         A1P09810
   30 CONTINUE                                                         A1P09820
      I1=KM1                                                           A1P09830
      CALL CF(I, J-1, I1,2, B2, X)                                     A1P09840
      I1=KP1                                                           A1P09850
      CALL CF(I, J+1, I1,2, B2, X)                                     A1P09860
      I1=0                                                             A1P09870
      CALL CF (I, J, I1, 2, B3, X)                                     A1P09880
   33 IF (MFLAG) 34, 34, 35                                            A1P09890
   34 IF (I-2) 50, 35, 36                                              A1P09900
   35 CONTINUE                                                         A1P09910
      CALL CF(I-2,J, I1, 3,-B7, X)                                     A1P09920
      IF (MFLAG) 50, 50, 37                                            A1P09930
   36 IF (I-NCOL) 50, 37, 37                                           A1P09940
   37 CONTINUE                                                         A1P09950
      CALL CF(I+2,J, I1, 3, B7, X)                                     A1P09960
      IF (MFLAG) 50, 50, 40                                            A1P09970
   40 CONTINUE                                                         A1P09980
      I1=0                                                             A1P09990
      CALL CF(I+1,J, I1,2,  B4, X)                                     A1P10000
      CALL CF(I+1,J, I1,3,  B5, X)                                     A1P10010
      I1=KM1                                                           A1P10020
      CALL CF(I+1,J-1,I1,1, B1, X)                                     A1P10030
      CALL CF(I+1,J-1,I1,3, B6, X)                                     A1P10040
      I1=KP1                                                           A1P10050
      CALL CF(I+1,J+1,I1,1,-B1, X)                                     A1P10060
      CALL CF(I+1,J+1,I1,3, B6, X)                                     A1P10070
   45 IF (I-1) 20, 20, 46                                              A1P10080
```


LOCKHEED MISSILES & SPACE COMPANY

```
   46 IF (MFLAG) 50, 50, 20                                          A1P10090
   50 RETURN                                                         A1P10100
      END                                                            A1P10110
                                                                     A1P10120
*     FORTRAN                                                        A1P10130
      SUBROUTINE EQ3 (X, II1, II, JJ, MX)                            A1P10140
C     COMPUTE EQUATION THREE  FOR MESH PT I,J.                       A1P10150
      COMMON NDIM, NROW, NCOL, MM, K0, KP1, KP2, KM1, KM2, MFLAG, B,C  A1P10160
      COMMON IOPT1, IOPT2, IOPT3, IOPT4, IOPT5, IOPT6, IOPT7, IOPT8  A1P10170
      COMMON A1, A2, A3, A4, A5, A6                                  A1P10180
      COMMON  B1, B2, B3, B4, B5, B6, B7, C1, C2, C3, C4, C5, C6, C7,C8,A1P10190
     1 C9, C10, C11, C12                                             A1P10200
      DIMENSION MM(35)                                               A1P10210
      I1=II1                                                         A1P10220
      I=II                                                           A1P10230
       J=JJ                                                          A1P10240
      M=MX                                                           A1P10250
      GO TO (30, 20, 30, 40, 50), M                                  A1P10260
   20 CONTINUE                                                       A1P10270
      I1=0                                                           A1P10280
      CALL  CF (I-1,J,I1,2, C4, X)                                   A1P10290
      CALL CF (I-1,J, I1, 3, C8, X)                                  A1P10300
      I1=KM1                                                         A1P10310
      CALL CF (I-1, J-1, I1, 3, C9, X)                               A1P10320
      CALL  CF (I-1,J-1,I1,2,-C5, X)                                 A1P10330
      I1=KP1                                                         A1P10340
      CALL  CF (I-1,J+1,I1,2,-C5, X)                                 A1P10350
      CALL CF (I-1, J+1, I1, 3, C9, X)                               A1P10360
      GO TO 50                                                       A1P10370
   30 CONTINUE                                                       A1P10380
      I1=KM1                                                         A1P10390
      CALL CF (I, J-1,I1, 3, C7, X)                                  A1P10400
      CALL CF (I,J-1,I1,1, C1, X)                                    A1P10410
      I1=KP1                                                         A1P10420
      CALL CF (I,J+1,I1,1,-C1, X)                                    A1P10430
      CALL CF (I, J+1,I1, 3, C7, X)                                  A1P10440
      I1=KM2                                                         A1P10450
      CALL CF (I, J-2, I1, 3, C6, X)                                 A1P10460
      I1=KP2                                                         A1P10470
```


LOCKHEED MISSILES & SPACE COMPANY

```
      CALL CF (I, J+2, I1, 3, C6, X)                                    A1P10480
      IF (J-NROW) 33, 32, 32                                            A1P10490
   32 CONTINUE                                                          A1P10500
      CALL CF (I, J-2, KM2,1,2.*C12,X)                                  A1P10510
      CALL CF (I, J-1, KM1,1,-4.*C12, X)                                A1P10520
      CALL CF (I, J, 0, 1, 6.*C12, X)                                   A1P10530
      CALL CF (I, J+1, 0, 1, -4.*C12,X)                                 A1P10540
      GO TO 380                                                         A1P10550
   33 CONTINUE                                                          A1P10560
      IF (IOPT2) 37, 37, 35                                             A1P10570
   35 IF (J-1) 36, 36, 37                                               A1P10580
   36 CONTINUE                                                          A1P10590
      CALL CF (I, J-1, 0, 1,  4.*C12,X)                                 A1P10600
      CALL CF (I, J, 0, 1,-6.*C12,X)                                    A1P10610
      CALL CF (I, J+1, KP1, 1,4.*C12, X)                                A1P10620
      CALL CF (I, J+2, KP2, 1,-2.*C12,X )                               A1P10630
      GO TO 380                                                         A1P10640
   37 CONTINUE                                                          A1P10650
      CALL CF (I, J+2, I1, 1,-C12, X)                                   A1P10660
      I1=KM2                                                            A1P10670
      CALL CF (I, J-2, I1, 1, C12, X)                                   A1P10680
  380 CONTINUE                                                          A1P10690
      I1=0                                                              A1P10700
      CALL CF (I, J, I1, 3, C11, X)                                     A1P10710
      CALL  CF (I,J, I1, 2,3.*C2, X)                                    A1P10720
      IF (MFLAG) 381, 381, 38                                           A1P10730
  381 IF (I-2) 50, 38, 39                                               A1P10740
   38 CONTINUE                                                          A1P10750
      CALL  CF (I-2,J, I1,2, C2, X)                                     A1P10760
      CALL CF (I-2,J,I1,3, C10, X)                                      A1P10770
      IF (MFLAG) 50, 50, 390                                            A1P10780
   39 IF (I-NCOL) 50, 390, 390                                          A1P10790
  390 CONTINUE                                                          A1P10800
      CALL CF (I+2,J,I1,3, C10, X)                                      A1P10810
      IF (MFLAG) 50, 50, 40                                             A1P10820
   40 CONTINUE                                                          A1P10830
      I1=0                                                              A1P10840
      CALL  CF (I+1,J,I1,2, C3, X)                                      A1P10850
      CALL CF (I+1,J, I1, 3, C8, X)                                     A1P10860
```

```
      I1=KM1                                                            A1P10870
      CALL CF (I+1, J-1, I1, 3, C9, X)                                  A1P10880
      CALL  CF (I+1,J-1,I1,2, C5, X)                                    A1P10890
      I1=KP1                                                            A1P10900
      CALL  CF (I+1,J+1,I1,2, C5, X)                                    A1P10910
      CALL CF (I+1, J+1, I1, 3, C9, X)                                  A1P10920
   45 IF (I-1) 20, 20, 46                                               A1P10930
   46 IF (MFLAG) 50, 50, 20                                             A1P10940
   50 RETURN                                                            A1P10950
      END                                                               A1P10960
*     FORTRAN                                                           A1P10970
      SUBROUTINE GRADE (J)                                              A1P10980
      DIMENSION BS(6)                                                   A1P10990
      DIMENSION A(25), AA(26,6)                                         A1P11000
      COMMON NDIM, NROW, NCOL, MM, K0, KP1, KP2, KM1, KM2, MFLAG, B,C   A1P11010
      COMMON IOPT1, IOPT2, IOPT3, IOPT4, IOPT5, IOPT6, IOPT7, IOPT8     A1P11020
      COMMON A                                                          A1P11030
      COMMON  TMP, YK, YL                                               A1P11040
      COMMON ZNU, RHO, THC, R1H, D1B, D1H, T1H, C1H                     A1P11050
      COMMON XH,XK, GDXH, PO, DP                                        A1P11060
      DIMENSION TMP (5184), YK(5184), YL(5184)                          A1P11070
      DIMENSION MM(35)                                                  A1P11080
      DO 2 I=37, 40                                                     A1P11090
    2 MM(I)=0                                                           A1P11100
      IF (J) 51, 51, 1                                                  A1P11110
    1 CONTINUE                                                          A1P11120
      JM=MM(J)                                                          A1P11130
      GDXH= XH/2.**JM                                                   A1P11140
      JM1=MM(J-1)                                                       A1P11150
      JM2= MM(J-2)                                                      A1P11160
      JP1= MM(J+1)                                                      A1P11170
      JP2= MM(J+2)                                                      A1P11180
      IF (J-2) 10, 10, 4                                                A1P11190
    4 IF (J-NROW+1) 5, 30, 30                                           A1P11200
    5 IF (JP2-JM2) 10, 20, 30                                           A1P11210
C     MESH SPACING INCREASING                                           A1P11220
   10 IF (JP1-JM) 11, 12, 12                                            A1P11230
C     DUBLE  MESH SPACING AFTER THIS ROW                                A1P11240
   11 KP1=-1                                                            A1P11250
```

```
      KP2=-2                                                            A1P11260
      IF (J-1) 40, 40, 99                                               A1P11270
   12 IF (JP2-JP1)  14, 18, 18                                          A1P11280
   14 KP2=-1                                                            A1P11290
      IF (J-2) 40, 15, 15                                               A1P11300
   15 IF (JM-JM1) 16, 99, 99                                            A1P11310
C     MESH SPACING CHANGES IN BOTH DIRECTIONS                           A1P11320
   16 KM2=-2                                                            A1P11330
      GO TO 40                                                          A1P11340
   18 IF (J-2) 40, 37, 13                                               A1P11350
   13 IF (JM-JM1) 19, 20, 20                                            A1P11360
C     DOUBLE THE MESH SPACING                                           A1P11370
   19 KM2=-2                                                            A1P11380
      GO TO 40                                                          A1P11390
   20 GO TO 99                                                          A1P11400
C     MESH SPACING IS DECREASING                                        A1P11410
   30 IF (JM-JM1) 32, 32, 31                                            A1P11420
C     CUT MESH SPACING IN HALF                                          A1P11430
   31 KM1=1                                                             A1P11440
      KM2=2                                                             A1P11450
      GO TO 40                                                          A1P11460
   32 IF (JM1-JM2) 37, 37, 33                                           A1P11470
   33 IF (J-NROW+1) 35, 34, 34                                          A1P11480
C     MESH SPACING AT LAST ROW WAS CUT IN HALF                          A1P11490
   34 KM2=1                                                             A1P11500
      GO TO 99                                                          A1P11510
   35 IF (JP1-JM) 34, 34, 36                                            A1P11520
C     SPACING CHANGES IN BOTH DIRECTIONS                                A1P11530
   36 KM2=1                                                             A1P11540
      KP2=2                                                             A1P11550
      GO TO 99                                                          A1P11560
   37 IF (J-NROW+1) 38, 20, 20                                          A1P11570
   38 IF (JP1-JM) 20, 20, 39                                            A1P11580
C     MESH CUT IN HALF AFTER NEXT ROW                                   A1P11590
   39 KP2=2                                                             A1P11600
      GO TO 99                                                          A1P11610
C     SELECT COEFFICIENTS FOR CURRENT SPACING                           A1P11620
   40 K=JM+KADD                                                         A1P11630
      DO 45 L=1, 25                                                     A1P11640
```

```
   45 A(L)=AA(L, K)                                                    A1P11650
      B=BS(K)                                                          A1P11660
      C=AA(26, K)                                                      A1P11670
      GO TO 99                                                         A1P11680
C     FORM THE COEFFICIENTS FOR ALL SPACINGS                           A1P11690
   51 MIN=MM(1)                                                        A1P11700
      MAX=MIN                                                          A1P11710
      DO 60 K=2, NROW                                                  A1P11720
      IF (MAX-MM(K)) 54, 55, 55                                        A1P11730
   54 MAX=MM(K)                                                        A1P11740
   55 IF (MIN-MM(K)) 60, 60, 56                                        A1P11750
   56 MIN=MM(K)                                                        A1P11760
   60 CONTINUE                                                         A1P11770
      KADD=1-MIN                                                       A1P11780
      DO 70 K1=MIN, MAX                                                A1P11790
      K=K1+KADD                                                        A1P11800
      CALL COEFZ(K1)                                                   A1P11810
      DO 65 L=1,25                                                     A1P11820
   65 AA(L, K)=A(L)                                                    A1P11830
      BS(K)=B                                                          A1P11840
      AA(26,K)=C                                                       A1P11850
   70 CONTINUE                                                         A1P11860
   99 RETURN                                                           A1P11870
      END                                                              A1P11880
*     FORTRAN                                                          A1P11890
      FUNCTION INDX(II, JJ, KK)                                        A1P11900
      COMMON NDIM, NROW, NCOL, MM, MFLAG, B, C                         A1P11910
      COMMON IOPT1, IOPT2, IOPT3, IOPT4, IOPT5, IOPT6, IOPT7, IOPT8    A1P11920
      DIMENSION MM(40)                                                 A1P11930
      I=II                                                             A1P11940
      J=JJ                                                             A1P11950
      K=KK                                                             A1P11960
       IF (MFLAG) 100, 100, 200                                        A1P11970
  100 CONTINUE                                                         A1P11980
      IF (IOPT2) 10, 10, 20                                            A1P11990
   10 IF (I-1) 1, 1, 5                                                 A1P12000
    1 IF (K-1) 2, 2, 3                                                 A1P12010
    2 INDX= (J-1)*2                                                    A1P12020
      GO TO 50                                                         A1P12030
```

```
    3 INDX= J*2-1                                                   A1P12040
      GO TO 50                                                      A1P12050
    5 INDX= 3*J+K-4                                                 A1P12060
      GO TO 50                                                      A1P12070
   20 IF (I-1) 21, 21, 29                                           A1P12080
   21 IF (K-1) 22, 22, 24                                           A1P12090
   22 INDX=J*2-1                                                    A1P12100
      GO TO 50                                                      A1P12110
   24 INDX=J*2                                                      A1P12120
      GO TO 50                                                      A1P12130
   29 INDX=3*J+K-3                                                  A1P12140
      GO TO 50                                                      A1P12150
  200 IF (I-NCOL) 201, 201, 220                                     A1P12160
  201 IF (J-NROW) 202, 202, 210                                     A1P12170
  202 IF (J) 230, 230, 205                                          A1P12180
  205 INDX= (I-1)*(NROW+6)*3+3*J+K+6                                A1P12190
      GO TO 50                                                      A1P12200
  210 IF (IOPT2) 211,211,216                                        A1P12210
  211 INDX=3*(NROW+NCOL-I) +2+K                                     A1P12220
  212 IF (I-1) 214, 214, 50                                         A1P12230
  214 IF (K-3) 50, 215, 215                                         A1P12240
  215 INDX=INDX-1                                                   A1P12250
      GO TO 50                                                      A1P12260
  216 INDX=3*(NROW+NCOL+NCOL-I)+K+5                                 A1P12270
      GO TO 212                                                     A1P12280
  220 INDX=3*J+K-4                                                  A1P12290
      IF (IOPT2) 50, 50, 221                                        A1P12300
  221 INDX=INDX+3*NCOL+3                                            A1P12310
      GO TO 50                                                      A1P12320
  230 INDX=3*I+K-4                                                  A1P12330
      IF (I-1) 231, 231, 50                                         A1P12340
  231 IF (K-1) 232, 232, 50                                         A1P12350
  232 INDX=INDX+1                                                   A1P12360
   50 RETURN                                                        A1P12370
      END                                                           A1P12380
*     FORTRAN                                                       A1P12390
      SUBROUTINE INVERT(A,IMAX,ISING)                               A1P12400
C     SUBROUTINE TO INVERT A MATRIX                                 A1P12410
      DIMENSION A(72, 72), IN(72), TEMP(72)                         A1P12420
```

```
      ISING=0                                                           A1P12430
      N=IMAX                                                            A1P12440
      IMAXO=N-1                                                         A1P12450
      I1=1                                                              A1P12460
    1 I3=I1                                                             A1P12470
      IN(I1)=0                                                          A1P12480
      SUM=ABSF(A(I1,I1))                                                A1P12490
      DO3I=I1,N                                                         A1P12500
      IF(SUM-ABSF(A(I,I1)))2,3,3                                        A1P12510
    2 I3=I                                                              A1P12520
      IN(I1)=I                                                          A1P12530
      SUM=ABSF(A(I,I1))                                                 A1P12540
    3 CONTINUE                                                          A1P12550
      IF(I3-I1)4,6,4                                                    A1P12560
    4 DO5J=1,N                                                          A1P12570
      SUM=A(I1,J)                                                       A1P12580
      A(I1,J)=A(I3,J)                                                   A1P12590
    5 A(I3,J)=SUM                                                       A1P12600
    6 I3=I1+1                                                           A1P12610
      IF(A(I1,I1))97,99,97                                              A1P12620
   97 DO7I=I3,N                                                         A1P12630
    7 A(I,I1)=A(I,I1)/A(I1,I1)                                          A1P12640
      J2=I1-1                                                           A1P12650
      IF(J2)8,11,8                                                      A1P12660
    8 DO9J=I3,N                                                         A1P12670
    9 A(I1,J)=A(I1,J)-DPSUM (A,I1,J,1,J2)                               A1P12680
   11 J2=I1                                                             A1P12690
      I1=I1+1                                                           A1P12700
      DO12I=I1,N                                                        A1P12710
   12 A(I,I1)=A(I,I1)-DPSUM(A, I, I1, 1, J2)                            A1P12720
      IF(I1-N)1,14,1                                                    A1P12730
   14 DO600JP=1,N                                                       A1P12740
      J=N+1-JP                                                          A1P12750
      A(J,J)=1.0/A(J,J)                                                 A1P12760
      IF(J-1)603,700,603                                                A1P12770
  603 DO600IP=2,J                                                       A1P12780
      I=J+1-IP                                                          A1P12790
      IPO=I+1                                                           A1P12800
      SUM=-DPSUM (A,I,J,IPO,J)                                          A1P12810
```

```
  600 A(I,J)=SUM/A(I,I)                                                 A1P12820
  700 DO151J=1,IMAXO                                                    A1P12830
      JPO=J+1                                                           A1P12840
      DO151I=JPO,N                                                      A1P12850
      IMO=I-1                                                           A1P12860
      SUM=-DPSUM (A,I,J,J+1,IMO)                                        A1P12870
      SUM=SUM-A(I,J)                                                    A1P12880
  151 A(I,J)=SUM                                                        A1P12890
      DO901I=1,N                                                        A1P12900
      DO900J=1,N                                                        A1P12910
      IF (I-J) 897,897,898                                              A1P12920
  897 TEMP(J)=DPSUM(A,I,J,J+1,N)                                        A1P12930
      TEMP(J)=TEMP(J)+A(I,J)                                            A1P12940
      GO TO 900                                                         A1P12950
  898 TEMP(J)=DPSUM(A,I,J,I,N)                                          A1P12960
  900 CONTINUE                                                          A1P12970
      DO901J=1,N                                                        A1P12980
  901 A(I,J)=TEMP(J)                                                    A1P12990
      DO500I=2,N                                                        A1P13000
      M=N+1-I                                                           A1P13010
      IF(IN(M))502,500,502                                              A1P13020
  502 ISS=IN(M)                                                         A1P13030
      DO503L=1,N                                                        A1P13040
      SUM=A(L,ISS)                                                      A1P13050
      A(L,ISS)=A(L,M)                                                   A1P13060
  503 A(L,M)=SUM                                                        A1P13070
  500 CONTINUE                                                          A1P13080
      GO TO 805                                                         A1P13090
   99 ISING=1                                                           A1P13100
  805 RETURN                                                            A1P13110
      END                                                               A1P13120
*     FORTRAN                                                           A1P13130
      SUBROUTINE MTX (X, I, M)                                          A1P13140
      COMMON NDIM, NROW, NCOL, MM, I1, KP1, KP2, KM1, KM2, MFLAG, B,C   A1P13150
      COMMON IOPT1, IOPT2, IOPT3, IOPT4, IOPT5, IOPT6, IOPT7, IOPT8     A1P13160
      DIMENSION MM(35)                                                  A1P13170
      DIMENSION X(72, 72)                                               A1P13180
       II=0                                                             A1P13190
      DO 1 II=1, NDIM                                                   A1P13200
```

```
      DO 1 JJ=1, NDIM                                                   A1P13210
    1 X(II, JJ)=0.                                                      A1P13220
      DO 100 J=1, NROW                                                  A1P13230
      IF (IOPT3) 50, 50, 7                                              A1P13240
    7 CALL GRADE (J)                                                    A1P13250
   50 IF (J-1) 57, 57, 58                                               A1P13260
   57 IF (IOPT2) 59, 59, 58                                             A1P13270
   58 I1=I1+1                                                           A1P13280
      CALL EQ1 (X, I1, I, J, M)                                         A1P13290
   59 IF (I-1) 61, 61, 60                                               A1P13300
   60 I1=I1+1                                                           A1P13310
      CALL EQ2 (X, I1, I, J, M)                                         A1P13320
   61 I1=I1+1                                                           A1P13330
      CALL EQ3 ( X, I1, I, J, M)                                        A1P13340
  100 CONTINUE                                                          A1P13350
      RETURN                                                            A1P13360
      END                                                               A1P13370
*     FORTRAN                                                           A1P13380
*     LIST                                                              A1P13390
      SUBROUTINE MTXS (X, Y, II, M)                                     A1P13400
      COMMON NDIM, NROW, NCOL, MM, MFLAG, B, C                          A1P13410
      COMMON IOPT1, IOPT2, IOPT3, IOPT4, IOPT5, IOPT6, IOPT7, IOPT8     A1P13420
      COMMON A1, A2, A3, A4, A5, A6                                     A1P13430
      COMMON  B1, B2, B3, B4, B5, B6, B7, C1, C2, C3, C4, C5, C6, C7,C8,A1P13440
    1 C9, C10, C11, C12                                                 A1P13450
      DIMENSION MM(40)                                                  A1P13460
C     MULTIPLICATION BY A SINGLE DIAGONAL                               A1P13470
      DIMENSION X(72, 72), Y(72, 72)                                    A1P13480
      I=II                                                              A1P13490
    3 IF (M-1) 20, 100, 100                                             A1P13500
C     CLEAR OUT Y                                                       A1P13510
   20 DO 23 J=1, NDIM                                                   A1P13520
   23 Y(J,1)=0.                                                         A1P13530
      L1=1                                                              A1P13540
      GO TO 2                                                           A1P13550
  100 L1=NDIM                                                           A1P13560
      IF (M-1) 2,2,50                                                   A1P13570
C     FORM A*X AND STORE IN Y                                           A1P13580
    2 DO 5 J=1,NROW                                                     A1P13590
```

```
      IF (IOPT3)  7, 7, 6                                               A1P13600
    6 CALL GRADE (J)                                                    A1P13610
    7 I1=INDX (I, J, 2)                                                 A1P13620
      I2=I1+1                                                           A1P13630
      J1=INDX (I-2, J, 3)                                               A1P13640
      J2=J1-1                                                           A1P13650
      IF (I-3) 31, 31, 32                                               A1P13660
   31 CC=0.                                                             A1P13670
      GO TO  33                                                         A1P13680
   32 CC=C2                                                             A1P13690
   33 DO 4 K=1, L1                                                      A1P13700
      Y(I1, K)= Y(I1, K)- X(J1, K)*B7                                   A1P13710
    4 Y(I2, K)= Y(I2, K)+ X(J2, K)*CC+X(J1, K)*C10                      A1P13720
    5 CONTINUE                                                          A1P13730
      GO TO 99                                                          A1P13740
C     FORM  X*E AND STORE IN Y                                          A1P13750
   50 CONTINUE                                                          A1P13760
      DO 60 J=1, NROW                                                   A1P13770
      IF (IOPT3) 52, 52, 51                                             A1P13780
   51 CALL GRADE (J)                                                    A1P13790
   52 IF (I-1) 49, 49, 48                                               A1P13800
   49 CC=2.*C10                                                         A1P13810
      BB=0.                                                             A1P13820
      GO TO 57                                                          A1P13830
   48 CC=C10                                                            A1P13840
      BB=B7                                                             A1P13850
   57 I2= INDX (I, J, 3)                                                A1P13860
      I1=I2-1                                                           A1P13870
      J1= INDX(I+2, J, 2)                                               A1P13880
      J2=J1+1                                                           A1P13890
      IF (I-1) 53, 53, 55                                               A1P13900
   53 DO 54 K=1, L1                                                     A1P13910
   54 Y(K, J1)= Y(K, J1)-X(K, I2)*C2                                    A1P13920
   55 DO 58 K=1, L1                                                     A1P13930
   58 Y(K, J2)= Y(K, J2)+X(K, I1)*BB+X(K, I2)*CC                        A1P13940
   60 CONTINUE                                                          A1P13950
   99 RETURN                                                            A1P13960
      END                                                               A1P13970
*     FORTRAN                                                           A1P13980
```

```
      SUBROUTINE NORM (X, CONS, K)                                      A1P13990
      DIMENSION X(12), Y(12)                                            A1P14000
      DO 1 I=1,K                                                        A1P14010
    1 Y(I)=ABSF(X(I))                                                   A1P14020
      DO 10 I=2,K                                                       A1P14030
      IF (Y(1)-Y(I)) 2,10,10                                            A1P14040
    2 TEMP=Y(1)                                                         A1P14050
      Y(1)=Y(I)                                                         A1P14060
      Y(I)=TEMP                                                         A1P14070
   10 CONTINUE                                                          A1P14080
      DO 20 I=1,K                                                       A1P14090
   20 X(I)=X(I)/Y                                                       A1P14100
      CONS=CONS/Y                                                       A1P14110
      RETURN                                                            A1P14120
      END                                                               A1P14130
*     FORTRAN                                                           A1P14140
      SUBROUTINE QROSIM (A, M, K)                                       A1P14150
      DIMENSION A (270, 12)                                             A1P14160
       N=271                                                            A1P14170
      ID=I+K                                                            A1P14180
      I1=1                                                              A1P14190
    1 I3=I1+1                                                           A1P14200
      I2=ID                                                             A1P14210
      M1=I1+K                                                           A1P14220
      IF (M1-M) 4, 4, 3                                                 A1P14230
    3 M1=M                                                              A1P14240
    4 DO 5 I=I3, M1                                                     A1P14250
      I2=I2-1                                                           A1P14260
    5 A(I,I2)= A(I,I2)/A(I1,ID)                                         A1P14270
   14 J2=I1-1                                                           A1P14280
      I3=I1+1                                                           A1P14290
      IF (J2) 6, 11, 6                                                  A1P14300
    6 K1=K                                                              A1P14310
      I2=ID                                                             A1P14320
      M1= I1+K-1                                                        A1P14330
      IF (M1-M) 8, 8, 7                                                 A1P14340
    7 M1=M                                                              A1P14350
    8 DO 9 J=I3, M1                                                     A1P14360
      K1= K1-1                                                          A1P14370
```

```
      K2= XMAXOF(I1-K1, 1)                                              A1P14380
      I2=I2+1                                                           A1P14390
    9 A(I1,I2)= A(I1,I2)- QDPSUM (A, I1, J, K2, J2)                     A1P14400
      I2=ID+K+1                                                         A1P14410
      J1= XMAXOF( I1-K, 1)                                              A1P14420
      A(I1, I2)= A(I1, I2)- QDPSUM (A, I1, N,J1, J2)                    A1P14430
      IF (I1-M) 11, 18, 11                                              A1P14440
   11 J2=I1                                                             A1P14450
      I1=I1+1                                                           A1P14460
      K1=K+1                                                            A1P14470
      I2=ID+1                                                           A1P14480
      M1=I1+K-1                                                         A1P14490
      IF (M1-M) 13, 13, 12                                              A1P14500
   12 M1=M                                                              A1P14510
   13 DO 15 I=I1,M1                                                     A1P14520
      I2= I2-1                                                          A1P14530
      K1=K1-1                                                           A1P14540
      K2=XMAXOF(I1-K1,1)                                                A1P14550
   15 A(I,I2)= A(I,I2)- QDPSUM (A, I, I1, K2, J2)                       A1P14560
      IF (I1-M) 1, 14, 1                                                A1P14570
   18 K1= ID+K+1                                                        A1P14580
      DO 17 I=1,M                                                       A1P14590
      J2= M-I                                                           A1P14600
      I3=J2+1                                                           A1P14610
      A(I3, K1)= A(I3,K1)/A(I3,ID)                                      A1P14620
      IF (J2) 16, 19, 16                                                A1P14630
   16 J1=XMAXOF (I3-K,1)                                                A1P14640
      DO 17 J=J1, J2                                                    A1P14650
      I4=I3+K+1-J                                                       A1P14660
   17 A(J,K1)=A(J,K1)-A(I3,K1)*A(J,I4)                                  A1P14670
   19 RETURN                                                            A1P14680
      END                                                               A1P14690
*     FORTRAN                                                           A1P14700
      SUBROUTINE STORE (X, II)                                          A1P14710
      DIMENSION MM(40)                                                  A1P14720
      COMMON NDIM, NROW, NCOL, MM, MFLAG, B, C                          A1P14730
      COMMON IOPT1, IOPT2, IOPT3, IOPT4, IOPT5, IOPT6, IOPT7, IOPT8     A1P14740
      COMMON A1, A2, A3, A4, A5, A6                                     A1P14750
      COMMON  B1, B2, B3, B4, B5, B6, B7, C1, C2, C3, C4, C5, C6, C7,C8,A1P14760
```

```
    1 C9, C10, C11, C12                                                 A1P14770
      COMMON TMP, YK, YL                                                A1P14780
      DIMENSION TMP (5184), YK(5184), YL(5184)                          A1P14790
      DIMENSION X(59)                                                   A1P14800
      N2= (NROW+6)*3                                                    A1P14810
      NC1=NCOL+1                                                        A1P14820
      SN1=1.                                                            A1P14830
      SN2=1.                                                            A1P14840
      IF (IOPT5) 21, 21, 20                                             A1P14850
   20 SN2=-1.                                                           A1P14860
   21 IF (IOPT6) 50, 50, 22                                             A1P14870
   22 SN1=-1.                                                           A1P14880
   50 CONTINUE                                                          A1P14890
      IF (MFLAG)  100, 100, 200                                         A1P14900
  100 N1=(II-1)*N2+10                                                   A1P14910
      I2=0                                                              A1P14920
      DO 110 J=1, NROW                                                  A1P14930
      IF (J-1) 101, 101, 103                                            A1P14940
  101 IF (IOPT2) 104, 104, 103                                          A1P14950
  103 I2=I2+1                                                           A1P14960
      TMP(N1)=X(I2)                                                     A1P14970
  104 IF (II-1) 107, 107, 106                                           A1P14980
  106 I2=I2+1                                                           A1P14990
      TMP (N1+1)=X(I2)                                                  A1P15000
  107 I2=I2+1                                                           A1P15010
      TMP (N1+2)=X(I2)                                                  A1P15020
  110 N1=N1+3                                                           A1P15030
      GO TO 999                                                         A1P15040
  200 IF(IOPT2) 220, 220, 201                                           A1P15050
  201 I2=II*270                                                         A1P15060
      DO 210 I=1, NCOL                                                  A1P15070
      N1= (I-1)*N2+1                                                    A1P15080
      I2=I2+1                                                           A1P15090
      TMP(N1+3)=YK(I2)                                                  A1P15100
      IF (I-1) 208, 208, 204                                            A1P15110
  204 I2=I2+1                                                           A1P15120
      TMP(N1+4)=YK(I2)                                                  A1P15130
  208 I2=I2+1                                                           A1P15140
      TMP(N1+2)=YK(I2)                                                  A1P15150
```

```
      TMP(N1+5) =TMP(N1+11)*SN1                                         A1P15160
  210 CONTINUE                                                          A1P15170
      N1=NC1*N2+4                                                       A1P15180
      TMP(N1)=YK(I2+1)                                                  A1P15190
      TMP(N1+1)=YK(I2+2)                                                A1P15200
      TMP(N1+2)=YK(I2+3)                                                A1P15210
      TMP(N1+6)=YK(I2+4)                                                A1P15220
      I2=I2+4                                                           A1P15230
      GO TO 222                                                         A1P15240
  220 I2=11*270                                                         A1P15250
  222 N0=NC1*N2+10                                                      A1P15260
      N1=N0+N2                                                          A1P15270
      NN=N0-N2-N2                                                       A1P15280
      TMP(N0+1)=YK(I2+1)                                                A1P15290
      TMP(N1+2)=YK(I2+2)                                                A1P15300
      I2=I2+2                                                           A1P15310
      TMP(N0+2)=TMP(NN+2)*SN2                                           A1P15320
  230 DO 240 J=2, NROW                                                  A1P15330
      N0=N0+3                                                           A1P15340
      N1=N1+3                                                           A1P15350
      NN=NN+3                                                           A1P15360
      TMP(N0)=YK(I2+1)                                                  A1P15370
      TMP(N0+1)= YK(I2+2)                                               A1P15380
      TMP(N0+2)=TMP(NN+2)*SN2                                           A1P15390
      TMP(N1+2)=YK(I2+3)                                                A1P15400
  240 I2=I2+3                                                           A1P15410
      N0=N0+6                                                           A1P15420
      TMP(N0)=YK(I2+1)                                                  A1P15430
      TMP(N0+1)=YK(I2+2)                                                A1P15440
      TMP(N0+2)=YK(I2+3)                                                A1P15450
      I2=I2+3                                                           A1P15460
      DO 250 I=1, NCOL                                                  A1P15470
      I1=NCOL+1-I                                                       A1P15480
      N1=I1*N2-5                                                        A1P15490
      I2=I2+1                                                           A1P15500
      TMP(N1)=YK(I2)                                                    A1P15510
      TMP(N1+2)=TMP(N1-4)*SN1                                           A1P15520
      IF (I1-I) 252, 252, 251                                           A1P15530
  251 I2=I2+1                                                           A1P15540
```


LOCKHEED MISSILES & SPACE COMPANY

```
      TMP(N1+1)=YK(I2)                                                  A1P15550
  252 I2=I2+1                                                           A1P15560
      TMP(N1+5)=YK(I2)                                                  A1P15570
  250 CONTINUE                                                          A1P15580
  999 RETURN                                                            A1P15590
      END                                                               A1P15600
*     FORTRAN                                                           A1P15610
      SUBROUTINE STRESS (II,JJ,KK)                                      A1P15620
      COMMON NDIM, NROW, NCOL, MM, KO, KP1, KP2, KM1, KM2, MFLAG, B,C   A1P15630
      COMMON IOPT1, IOPT2, IOPT3, IOPT4, IOPT5, IOPT6, IOPT7, IOPT8     A1P15640
      COMMON A1, A2, A3, A4, A5, A6                                     A1P15650
      COMMON  B1, B2, B3, B4, B5, B6, B7, C1, C2, C3, C4, C5, C6, C7,C8,A1P15660
     1 C9, C10, C11, C12                                                A1P15670
      COMMON  TMP, YK, YL                                               A1P15680
      COMMON ZNU, RHO, THC, R1H, D1B, D1H, T1H, C1H                     A1P15690
      COMMON XXH,XK,GDXH, PO, DP                                        A1P15700
      COMMON TE, TI, TO, OC, TC, TD, DDLD                               A1P15710
      COMMON ROT                                                        A1P15720
      COMMON EX, ENU, ETX, SC, DX, DTX, DNU                             A1P15730
      DIMENSION ROT (80)                                                A1P15740
      DIMENSION MM(35)                                                  A1P15750
      DIMENSION TMP(5184), YK(4, 1296), YL(4,4,324)                     A1P15760
  101 FORMAT (I3, 1H, I3, 1P9F12.4)                                     A1P15770
      J=JJ                                                              A1P15780
      K=KK                                                              A1P15790
      NC1=NCOL+1                                                        A1P15800
      NR1=NROW+1                                                        A1P15810
      IF (IOPT3) 1, 1, 5                                                A1P15820
    1 XH=XXH                                                            A1P15830
      GO TO 10                                                          A1P15840
    5 J1=XMAX0F (J, 1)                                                  A1P15850
      J1=MM(J1)                                                         A1P15860
      XH= XXH/2.**J1                                                    A1P15870
   10 I=II                                                              A1P15880
      TP3=RHO/THC                                                       A1P15890
      UX=(DEF(I,J-1,1, KM1)-DEF(I,J+1,1,KP1))/(2.*XH)                   A1P15900
      UT=(DEF(I+1,J,1, 0)-DEF(I-1, J, 1, 0))/ (2.*XK)                   A1P15910
      VX= (DEF(I , J-1, 2, KM1)- DEF (I, J+1, 2, KP1))/(2.*XH)          A1P15920
      VT= (DEF( I+1, J, 2, 0) -DEF (I-1, J, 2, 0))/(2.*XK)              A1P15930
```

```
      WXX= (DEF(I,J-1,3,KM1)-2.*DEF(I,J,3,0)+DEF(I,J+1,3,KP1))/XH**2     A1P15940
      WXT= (DEF(I+1, J-1,3,KM1)-DEF(I+1,J+1,3,KP1)-DEF(I-1,J-1, 3,KM1)+ A1P15950
     1 DEF (I-1, J+1,3,KP1))/(4.*XH*XK)                                  A1P15960
      WTT= (DEF (I+1,J,3,0)-2.*DEF(I,J,3,0)+DEF(I-1,J,3,0))/XK**2        A1P15970
      EPSX=TP3*UX                                                        A1P15980
      EPST=VT/THC+DEF(I, J, 3, 0)                                        A1P15990
      TP4=EPSX                                                           A1P16000
      TP5=EPST                                                           A1P16010
      WX= (DEF(I, J-1, 3, KM1)-DEF(I, J+1, 3, KP1))/(2.*XH)              A1P16020
      WT=(DEF(I+1, J, 3, 0)-DEF(I-1, J, 3, 0))/(2.*XK)                   A1P16030
      GAM=UT/THC+TP3*VX                                                  A1P16040
      RX1=-TP3**2*WXX                                                    A1P16050
      RX2=(VT-WTT/THC)/THC                                               A1P16060
      RX12=TP3*(VX-WXT/THC)                                              A1P16070
      IF (MFLAG) 20, 40, 40                                              A1P16080
   20 CONTINUE                                                           A1P16090
      OMEGAX=-TP3*WX                                                     A1P16100
      OMEGAT=DEF(I, J, 2, 0)-WT/THC                                      A1P16110
      PHI= (TP3*VX-UT/THC)/2.                                            A1P16120
      WRITE OUTPUT TAPE 6, 101, J, I, EPSX, EPST, GAM, RX1, RX2, RX12,   A1P16130
     1 OMEGAX, OMEGAT, PHI                                               A1P16140
      GO TO 99                                                           A1P16150
   40 CONTINUE                                                           A1P16160
      ZK=1./(12.*R1H**2)                                                 A1P16170
      UXX= (DEF(I, J-1,1,KM1)-2.*DEF(I, J, 1,0)+DEF(I,J+1,1,KP1))/XH**2 A1P16180
      VXX= (DEF (I, J-1, 2, KM1)-2.*DEF (I, J,2, 0)+DEF(I,J+1,2,KP1))/( A1P16190
     1 XH*XH)                                                            A1P16200
      VXT= (DEF(I+1, J-1, 2,KM1)-DEF(I+1,J+1, 2,KP1)- DEF (I-1,J-1,2,KM1A1P16210
     1 ) + DEF (I-1, J+1, 2, KP1))/(4.*XH*XK)                            A1P16220
      VTT=(DEF(I+1,J,2,0)-2.*DEF(I,J,2,0)+DEF(I-1,J,2,0))/XK**2          A1P16230
      WXXX= (DEF(I,J-2,3,KM2)-2.*DEF(I, J-1,3,KM1)+2.*DEF(I,J+1,3,KP1)   A1P16240
     1 -DEF(I,J+2,3,KP2))/(2.*XH**3)                                     A1P16250
      WXTT= (DEF (I+1, J-1,3,KM1)-2.*DEF(I,J-1,3,KM1)+2.*DEF(I,J+1,3,KP1A1P16260
     1 )-DEF(I+1,J+1,3,KP1)+DEF(I-1,J-1,3,KM1)-DEF(I-1,J+1,3,KP1))/(2.* A1P16270
     2 XH*XK*XK)                                                         A1P16280
      WTTT= (DEF(I+2,J,3,0)-2.*DEF(I+1,J,3,0)+2.*DEF(I-1,J,3,0)-DEF(I-2,A1P16290
     1 J,3,0))/(2.*XK**3)                                                A1P16300
      WXXT= (DEF(I+1,J-1,3,KM1)-2.*DEF(I+1,J,3,0)+2.*DEF (I-1,J,3,0)+    A1P16310
     1 DEF(I+1, J+1,3,KP1)-DEF(I-1,J-1,3,KM1)-DEF(I-1,J+1,3,KP1))/(2.*  A1P16320
```

```
    2 XH*XH*XK)                                                          A1P16330
      ANX=EPSX*EX+EPST*ENU-SC*RX1                                        A1P16340
      ANX=ANX-TC                                                         A1P16350
      ANT=EPSX*ENU+EPST*EX-SC*RX2                                        A1P16360
      ANT=ANT-TC                                                         A1P16370
      ANTX=ETX*GAM                                                       A1P16380
      ANXT=ANTX+DTX*RX12                                                 A1P16390
      AMX=DX*RX1+DNU*RX2-SC*EPSX                                         A1P16400
      AMX=AMX-TD                                                         A1P16410
      AMT=DNU*RX1+DX*RX2-SC*EPST                                         A1P16420
      AMT=AMT-TD                                                         A1P16430
      AMXT=DTX*RX12                                                      A1P16440
      AQX=-DX*TP3**3*WXXX-SC*TP3**2*UXX+(DNU+DTX)*TP3/THC*(VXT-WXTT/THC)A1P16450
      AQT= DTX*TP3**2*VXX+ (DX-SC)*VTT/THC**2-(DTX+DNU)*TP3**2*WXXT/THC A1P16460
    1 -DX*WTTT/THC**3-SC*WT/THC                                          A1P16470
      IF (K) 49, 49, 47                                                  A1P16480
   47 YL(1, K, I)=ANX                                                    A1P16490
      YL(2, K, I)=ANT                                                    A1P16500
      YL(3, K, I)=AMX                                                    A1P16510
      YL(4, K, I)=AMT                                                    A1P16520
   49 CONTINUE                                                           A1P16530
      IF (MFLAG) 45, 45, 46                                              A1P16540
   45  WRITE OUTPUT TAPE 6,101,J,I, AMX , AMT, AMXT, AQX , AQT          A1P16550
      GO TO 48                                                           A1P16560
   46  WRITE OUTPUT TAPE 6,101,J,I, ANX,ANT,ANXT, ANTX                  A1P16570
   48 CONTINUE                                                           A1P16580
      IF (J) 60, 60, 51                                                  A1P16590
   51 IF (NR1-J) 70, 70, 52                                              A1P16600
   52 IF (NC1-I) 80, 80, 99                                              A1P16610
C     LOWER BOUNDARY                                                     A1P16620
   60 J3=NC1+NR1+2+NC1-I                                                 A1P16630
   61 YK(1,J3)=ANXT+2.*ZK*AMXT                                           A1P16640
      YK(2, J3)=ANX                                                      A1P16650
      YK(3, J3)=+(AQX+(1.-ZNU)/THC *TP3*(VXT-WXTT/THC ))                 A1P16660
      YK(4, J3)=AMX                                                      A1P16670
      IF (I-NC1) 99, 69, 69                                              A1P16680
C     SPECIAL POINT                                                      A1P16690
   69 K1=2*(NC1+NR1)+1                                                   A1P16700
      YK(1, K1)=-2.*AMXT                                                 A1P16710
```

```
      GO TO 80                                                          A1P16720
C     UPPER BOUNDARY                                                    A1P16730
   70 YK(1, I)=ANXT+2.*ZK*AMXT                                          A1P16740
      YK(2, I)=ANX                                                      A1P16750
      YK(3, I)= -(AQX+(1.-ZNU)/THC *TP3*(VXT-WXTT/THC ))                A1P16760
      YK(4, I)=AMX                                                      A1P16770
      IF (I-NC1) 97, 79, 79                                             A1P16780
C     SPECIAL CORNER POINT                                              A1P16790
   79 K1=2*(NC1+NR1)                                                    A1P16800
      YK(1, K1)=2.*AMXT                                                 A1P16810
C     RIGHT BOUNDARY                                                    A1P16820
   80 J3=NC1+NR1+1-J                                                    A1P16830
      YK(1, J3)=-ANTX                                                   A1P16840
      YK(2, J3)=ANT                                                     A1P16850
      YK(3, J3)=AQT+(1.-ZNU)*TP3*TP3*(VXX-WXXT/THC )                    A1P16860
      YK(4, J3)=AMT                                                     A1P16870
   97 CONTINUE                                                          A1P16880
   99 RETURN                                                            A1P16890
      END                                                               A1P16900
*     FORTRAN                                                           A1P16910
      SUBROUTINE ZERO (X,N)                                             A1P16920
      DIMENSION X(8500)                                                 A1P16930
      DO 1 I=1,N                                                        A1P16940
    1 X(I)=0.                                                           A1P16950
      RETURN                                                            A1P16960
      END                                                               A1P16970
*     FAP                                                               A1P16980
       COUNT    150                                                     A1P16990
       ENTRY    CLOCK                                                   A1P17000
       ENTRY    WCKA                                                    A1P17010
*      SUBROUTINE     CLOCK                                             A1P17030
       ENTRY    WCKP                                                    A1P17020
*                      ***************                                  *A1P17040
*      THIS SUBROUTINE PLACES THE CLOCK IN A GIVEN LOCATION SPECIFIED   *A1P17050
*      BY THE CALL STATEMENT(  THAT IS.                                 *A1P17060
*      CALL CLOCK(LOCATION TO  E STORED      IN FORTRAN  OR             *A1P17070
*      CALL CLOCK       (FOR ABSOLUTE ASSEMBLIES USE  TSX CLOCK         *A1P17080
*      PZE   (LOCATION TO BE STORED)    IN  FAP                         *A1P17090
*              OR                                                      *A1P17100
```

```
*       SVN   (LOCATION TO BE STORED)  GIVES THE CLOCK IN FLOATING POINT*A1P17110
*       PZE  (LOCATION TO BE STORED) GIVES THE CLOCK IN ECD            *A1P17120
*       IN FORTRAN THE CLOCK WILL ALWAYS BE GIVEN IN FLOATING POINT    *A1P17130
*       THE CLOCK IS ALSO PRINTED ON-LINE                              *A1P17140
*                    ***************                                   *A1P17150
        SPACE   3                                                      A1P17160
CLOCK   BSS     0                                                      A1P17170
WCKA    BSS     0                                                      A1P17180
WCKP    BSS     0                                                      A1P17190
        SXA     CLOCK+55,1                                             A1P17200
        SXA     CLOCK+56,2                                             A1P17210
        SXA     CLOCK+57,4                                             A1P17220
        RPRA                                                           A1P17230
        SPRA    10                                                     A1P17240
        RCHA    CLOCK+105                                              A1P17250
        TCOA    *                                                      A1P17260
        STZ     CLOCK+61                                               A1P17270
        STZ     CLOCK+62                                               A1P17280
        CLA     CLOCK+227                                              A1P17290
        STO     CLOCK+218                                              A1P17300
        AXT     0,3                                                    A1P17310
        AXT     2,4                                                    A1P17320
        LDQ     CLOCK+104,1                                            A1P17330
        PXD     0,0                                                    A1P17340
        CAQ     CLOCK+153,,1                                           A1P17350
        CVR     CLOCK+217,,6                                           A1P17360
        ORS     CLOCK+63,4                                             A1P17370
        TIX     *-4,4,1                                                A1P17380
        CLA     CLOCK+226,2                                            A1P17390
        STO     CLOCK+218                                              A1P17400
        TXI     *+1,2,1                                                A1P17410
        TXI     *+1,1,2                                                A1P17420
        TXL     CLOCK+12,1,17                                          A1P17430
        PXD     0,0                                                    A1P17440
        LDQ     CLOCK+61                                               A1P17450
        LGL     30                                                     A1P17460
        LDQ     CLOCK+62                                               A1P17470
        LGL     18                                                     A1P17480
        RQL     6                                                      A1P17490
```

```
LGL     12                                                      A1P17500
SLW     CLOCK+61                                                A1P17510
LXA     CLOCK+57,4                                              A1P17520
CAL     1,4                                                     A1P17530
ARS     18                                                      A1P17540
TZE     CLOCK+55                                                A1P17550
PXD     0,0                                                     A1P17560
LDQ     CLOCK+61                                                A1P17570
CAQ     CLOCK+113,,4                                            A1P17580
STQ     CLOCK+61                                                A1P17590
ARS     18                                                      A1P17600
ADD     =0233000000000                                          A1P17610
FAD     =0233000000000                                          A1P17620
XCA                                                             A1P17630
FMP     =1.F2                                                   A1P17640
STO     CLOCK+87                                                A1P17650
PXD     0,0                                                     A1P17660
LDQ     CLOCK+61                                                A1P17670
CAQ     CLOCK+133,,2                                            A1P17680
ARS     18                                                      A1P17690
ADD     =0233000000000                                          A1P17700
FAD     =0233000000000                                          A1P17710
FAD     CLOCK+87                                                A1P17720
FDP     =1.F2                                                   A1P17730
STO     CLOCK+61                                                A1P17740
AXT     **,1                                                    A1P17750
AXT     **,2                                                    A1P17760
AXT     **,4                                                    A1P17770
CLA     CLOCK+61                                                A1P17780
STO*    1,4                                                     A1P17790
TRA     2,4                                                     A1P17800
PZE                                                             A1P17810
PZE                                                             A1P17820
OCT     ,,,,,,,,,,,,,,,,,,,,,,,                                 A1P17830
BSS     18                                                      A1P17840
IOCP    CLOCK+63,,18          WRITE                             A1P17850
IOCPN   CLOCK+87,,2           READ  (NON-TRANSMITTAL)           A1P17860
IOCP    CLOCK+81,,2           WRITE                             A1P17870
IOCPN   CLOCK+87,,2           READ  (NON-TRANSMITTAL)           A1P17880
```

```
IOCP    CLOCK+83,,2        WRITE                          A1P17890
IOCP    CLOCK+87,,2        READ                           A1P17900
IOCP    CLOCK+85,,2        WRITE                          A1P17910
IOCD    CLOCK+89,,16       READ                           A1P17920
PZE     *+10                                              A1P17930
PZE     *+9,,1000                                         A1P17940
PZE     *+8,,2000                                         A1P17950
PZE     *+7,,3000                                         A1P17960
PZE     *+6,,4000                                         A1P17970
PZE     *+5,,5000                                         A1P17980
PZE     *+4,,6000                                         A1P17990
PZE     *+3,,7000                                         A1P18000
PZE     *+2,,8000                                         A1P18010
PZE     *+1,,9000                                         A1P18020
PZE     *+10                                              A1P18030
PZE     *+9,,100                                          A1P18040
PZE     *+8,,200                                          A1P18050
PZE     *+7,,300                                          A1P18060
PZE     *+6,,400                                          A1P18070
PZE     *+5,,500                                          A1P18080
PZE     *+4,,600                                          A1P18090
PZE     *+3,,700                                          A1P18100
PZE     *+2,,800                                          A1P18110
PZE     *+1,,900                                          A1P18120
PZE     *+10                                              A1P18130
PZE     *+9,,10                                           A1P18140
PZE     *+8,,20                                           A1P18150
PZE     *+7,,30                                           A1P18160
PZE     *+6,,40                                           A1P18170
PZE     *+5,,50                                           A1P18180
PZE     *+4,,60                                           A1P18190
PZE     *+3,,70                                           A1P18200
PZE     *+2,,80                                           A1P18210
PZE     *+1,,90                                           A1P18220
PZE                                                       A1P18230
PZE     ,,1                                               A1P18240
PZE     ,,2                                               A1P18250
PZE     ,,3                                               A1P18260
PZE     ,,4                                               A1P18270
```

```
        PZE     ,,5                                                     A1P18280
        PZE     ,,6                                                     A1P18290
        PZE     ,,7                                                     A1P18300
        PZE     ,,8                                                     A1P18310
        PZE     ,,9                                                     A1P18320
        BCI     8,00000000000100001000001100010000010100011000011 1     A1P18330
        BCI     8,00100000100100101000101100110000110100111000111 1     A1P18340
        BCI     8,01000001000101001001001101010001010101011001011 1     A1P18350
        BCI     8,01100001100101101001101101110001110101111001111 1     A1P18360
        BCI     8,10000010000110001010001110010010010110011010011 1     A1P18370
        BCI     8,10100010100110101010101110110010110110111010111 1     A1P18380
        BCI     8,11000011000111001011001111010011010111011011011 1     A1P18390
        BCI     8,11100011100111101011101111111001111011111101111 1     A1P18400
        PZE     *                                                       A1P18410
        PZE     *-1                                                     A1P18420
        PON     *-2,,4096                                               A1P18430
        PON     *-3                                                     A1P18440
        PZE     *-4,,7*4096                                             A1P18450
        PZE     *-5,,6*4096                                             A1P18460
        PZE     *-6,,5*4096                                             A1P18470
        PZE     *-7,,4*4096                                             A1P18480
        PZE     *-8,,3*4096                                             A1P18490
        PZE     *-9,,2*4096                                             A1P18500
        PZE     *-10,,1*4096                                            A1P18510
        END                                                             A1P18520
*       FAP                                                             A1P18530
        COUNT   50                                                      A1P18540
*DPSUM  FUNCTION DPSUM(A,I,J,K,M). COMPUTE SUM OF A(I,L)*A(L,J), L=K,M. A1P18550
*       SET DPSUM=0 IF K GREATER THAN M                                 A1P18560
*       SET THE VFLD OF RDIM AND ROWDIM TO THE ROW DIMENSION OF A       A1P18570
        ENTRY   DPSUM                                                   A1P18580
DPSUM   CLA*    5,4       LOAD M                                        A1P18590
        CAS*    4,4        COMPARE WITH K                               A1P18600
        TRA     *+4     M IS BIGGER                                     A1P18610
        TRA     *+3      M=K                                            A1P18620
        PXA     0,0     M LESS THAN K     SET  DPSUM=0                  A1P18630
        TRA     6,4                                                     A1P18640
        SXA     AXT,1                                                   A1P18650
        SXA     AXT+1,2                                                 A1P18660
```

```
        STD     TEST                                    A1P18670
        CLA     1,4                                     A1P18680
        ADD     =1                                      A1P18690
        STA     AIL                                     A1P18700
        CLA*    2,4                                     A1P18710
        ARS     18                                      A1P18720
        STA     I                                       A1P18730
        CLA*    4,4                                     A1P18740
        PDX     ,2                                      A1P18750
        ARS     18                                      A1P18760
        SUB     =1                                      A1P18770
        XCA                                             A1P18780
        MPY     RDIM                                    A1P18790
        XCA                                             A1P18800
        ADD     I                                       A1P18810
        PAX     ,1                                      A1P18820
        CLA*    3,4                                     A1P18830
        ARS     18                                      A1P18840
        SUB     =1                                      A1P18850
        XCA                                             A1P18860
        MPY     RDIM                                    A1P18870
        XCA                                             A1P18880
        SSM                                             A1P18890
        ADD     AIL                                     A1P18900
        STA     ALJ                                     A1P18910
        STZ     SUM                                     A1P18920
        STZ     SUM+1                                   A1P18930
AIL     LDQ     **,1                                    A1P18940
ALJ     FMP     **,2                                    A1P18950
        DFAD    SUM                                     A1P18960
        DST     SUM                                     A1P18970
        TXI     *+1,1,ROWDIM                            A1P18980
        TXI     *+1,2,1                                 A1P18990
TEST    TXL     AIL,2,**                                A1P19000
AXT     AXT     **,1                                    A1P19010
        AXT     **,2                                    A1P19020
        TRA     6,4                                     A1P19030
R       COMMON  1                                       A1P19040
SUM     EQU     R+203                                   A1P19050
```

```
I       PZE                                                          A1P19060
ROWDIM  EQU     72                                                   A1P19070
RDIM    DEC     72                                                   A1P19080
        END                                                          A1P19090
*      FAP                                                           A1P19100
        COUNT   90                                                   A1P19110
*       MATRIX MULTIPLICATION IN DOUBLE PRECISION                    A1P19120
*       MATM (X, Y, Z, NR, NC, NCY)                                  A1P19130
*       COMPUTE Z=X*Y.  NR AND NC ARE NUMBER OF ROWS AND COLS IN X.  NCYA1P19140
*           IS NUMBER OF COLS IN Y.  Z=Y O.K. BUT NOT Z=X.           A1P19150
        ENTRY   MATM                                                 A1P19160
MATM    SXA     AXT,1                                                A1P19170
        SXA     AXT+1,2                                              A1P19180
        SXA     AXT+2,4                                              A1P19190
        CLA     1,4         X-MATRIX                                 A1P19200
        STA     AX                                                   A1P19210
        CLA     2,4                                                  A1P19220
        STA     AY                                                   A1P19230
        CLA     3,4                                                  A1P19240
        STA     AZ                                                   A1P19250
        CLA*    4,4      NR OF ROWS IN X                             A1P19260
        ARS     18                                                   A1P19270
        STA     NR                                                   A1P19280
        CLA*    5,4       NR OF COLS IN X                            A1P19290
        ARS     18                                                   A1P19300
        STA     NC                                                   A1P19310
        CLA*    6,4                                                  A1P19320
        ARS     18                                                   A1P19330
        STA     NCY                                                  A1P19340
        CLA     =1                                                   A1P19350
        STO     J                                                    A1P19360
MTO     LDQ     RWDIM                                                A1P19370
        MPY     J                                                    A1P19380
        XCA                                                          A1P19390
        SSM                                                          A1P19400
        ADD     AZ                                                   A1P19410
        ADD     RWDIM                                                A1P19420
        ADD     =1                                                   A1P19430
        STA     AZIJ                                                 A1P19440
```


LOCKHEED MISSILES & SPACE COMPANY

```
        LDQ     RWDIM                                   A1P19450
        MPY     J                                       A1P19460
        XCA                                             A1P19470
        SSM                                             A1P19480
        ADD     AY                                      A1P19490
        ADD     RWDIM                                   A1P19500
        ADD     =1                                      A1P19510
        STA     YCOL                                    A1P19520
        LXA     NR,1                                    A1P19530
        SXD     MT4,1                                   A1P19540
        AXT     I,1                                     A1P19550
        LXA     NC,2                                    A1P19560
YCOL    CLA     **,2                                    A1P19570
        STO     TEM,2                                   A1P19580
        TIX     YCOL,2,1                                A1P19590
MT1     SXA     I,1                                     A1P19600
        LDQ     RWDIM                                   A1P19610
        MPY     NC                                      A1P19620
        XCA                                             A1P19630
        PAX     ,4                                      A1P19640
        CLA     RWDIM                                   A1P19650
        ADD     AX                                      A1P19660
        ADD     =1                                      A1P19670
        SUB     I                                       A1P19680
        STA     MT2                                     A1P19690
        STA     AXIK                                    A1P19700
        LXA     NC,2                                    A1P19710
        STZ     TEM                                     A1P19720
        STZ     TEM+1                                   A1P19730
        PXA     0,0                                     A1P19740
MT2     NZT     **,4                                    A1P19750
        TXI     MT3+1,2,-1                              A1P19760
AXIK    LDQ     **,4                                    A1P19770
AYKJ    FMP     TEM,2                                   A1P19780
        DFAD    TEM                                     A1P19790
        DST     TEM                                     A1P19800
MT3     TNX     *+2,2,1                                 A1P19810
        TIX     MT2,4,ROWD                              A1P19820
AZIJ    STO     **,1                                    A1P19830
```

```
        TXI     *+1,1,1                                         A1P19840
MT4     TXL     MT1,1,**        **=NR                           A1P19850
        CLA     J                                               A1P19860
        ADD     =1                                              A1P19870
        CAS     NCY                                             A1P19880
        TRA     AXT                                             A1P19890
        TRA     *+1                                             A1P19900
        STO     J                                               A1P19910
        TRA     MT0                                             A1P19920
AXT     AXT     **,1                                            A1P19930
        AXT     **,2                                            A1P19940
        AXT     **,4                                            A1P19950
        TRA     7,4                                             A1P19960
RWDIM   DEC     72                                              A1P19970
ROWD    EQU     72                                              A1P19980
TEM     BOOL    130                                             A1P19990
AX      PZE     0                                               A1P20000
AY      PZE     0                                               A1P20010
AZ      PZE     0                                               A1P20020
NR      PZE     0                                               A1P20030
NC      PZE     0                                               A1P20040
NCY     PZE     0                                               A1P20050
I       PZE     0                                               A1P20060
J       PZE     0                                               A1P20070
        END                                                     A1P20080
*       FAP                                                     A1P20090
        COUNT   40                                              A1P20100
*PLBL    SUBROUTINE PLBL (CBLBL, NCR)                           A1P20110
        ENTRY   PLBL                                            A1P20120
PLBL    SXA     AXT,1                                           A1P20130
        SXA     AXT+1,2                                         A1P20140
        NZT*    2,4                                             A1P20150
        TRA     UPPER                                           A1P20160
RIGT    CLA     1,4                                             A1P20170
        STA     RT+1                                            A1P20180
        AXT     6,1                                             A1P20190
        AXT     0,2                                             A1P20200
RT      CLA     RT+6,1                                          A1P20210
        STO     **,2                                            A1P20220
```


LOCKHEED MISSILES & SPACE COMPANY

```
        TNX     AXT,1,1                                                 A1P20230
        TXI     R1,2,1                                                  A1P20240
UPPER   CLA     1,4                                                     A1P20250
        STA     UP+1                                                    A1P20260
        AXT     I2,1                                                    A1P20270
        AXT     0,2                                                     A1P20280
UP      CLA     UPP+12,1                                                A1P20290
        STO     **,2                                                     A1P20300
        TNX     AXT,1,1                                                 A1P20310
        TXI     UP,2,1                                                  A1P20320
AXT     AXT     **,1                                                    A1P20330
        AXT     **,2                                                    A1P20340
        TRA     3,4                                                     A1P20350
RT      BCI     6,    RIGHT BOUNDARY                                    A1P20360
UPP     BCI     6,    CURVE 1= UPPER BOUNDARY                           A1P20370
        BCI     6,    CURVE 2= LOWER  BOUNDARY                          A1P20380
        END                                                             A1P20390
*     FAP                                                               A1P20400
        COUNT   80                                                      A1P20410
*PLTLBL  SUBROUTINE PLTLBL (DISP, STRSS, ORDLBL, ABLBL, BOND )          A1P20420
        ENTRY   PLTLBL                                                  A1P20430
PLTLBL  SXA     AXT,1                                                   A1P20440
        SXA     AXT+1,2                                                 A1P20450
        CLA     1,4                                                     A1P20460
        STA     D1+1                                                    A1P20470
        AXT     9,1                                                     A1P20480
        AXT     0,2                                                     A1P20490
D1      CLA     DISP+9,1                                                A1P20500
        STO     **,2                                                     A1P20510
        TNX     *+2,1,1                                                 A1P20520
        TXI     D1,2,1                                                  A1P20530
        CLA     2,4                                                     A1P20540
        STA     S1+1                                                    A1P20550
        AXT     9,1                                                     A1P20560
        AXT     0,2                                                     A1P20570
S1      CLA     STRSS+9,1                                               A1P20580
        STO     **,2                                                     A1P20590
        TNX     *+2,1,1                                                 A1P20600
        TXI     S1,2,1                                                  A1P20610
```

```
        CLA     3,4                                                     A1P20620
        STA     O1+1                                                    A1P20630
        AXT     66,1                                                    A1P20640
        AXT     0,2                                                     A1P20650
O1      CLA     ORDU+66,1                                               A1P20660
        STO     **,2                                                    A1P20670
        TNX     *+2,1,1                                                 A1P20680
        TXI     O1,2,1                                                  A1P20690
        CLA     4,4                                                     A1P20700
        STA     A1+1                                                    A1P20710
        AXT     6,1                                                     A1P20720
        AXT     0,2                                                     A1P20730
A1      CLA     ABLBL+6,1                                               A1P20740
        STO     **,2                                                    A1P20750
        TNX     *+2,1,1                                                 A1P20760
        TXI     A1,2,1                                                  A1P20770
        CLA     5,4                                                     A1P20780
        STA     B1+1                                                    A1P20790
        AXT     9,1                                                     A1P20800
        AXT     0,2                                                     A1P20810
B1      CLA     BON+9,1                                                 A1P20820
        STO     **,2                                                    A1P20830
        TNX     *+2,1,1                                                 A1P20840
        TXI     B1,2,1                                                  A1P20850
AXT     AXT     **,1                                                    A1P20860
        AXT     **,2                                                    A1P20870
        TRA     6,4                                                     A1P20880
ORDU    BCI     6,                U                                     A1P20890
ORDV    BCI     6,                V                                     A1P20900
ORDW    BCI     6,                W                                     A1P20910
ORDNX   BCI     6,                 NX                                   A1P20920
ORDNT   BCI     6,                 NTHETA                               A1P20930
ORDMX   BCI     6,                 MX                                   A1P20940
ORDMT   BCI     6,                 MTHETA                               A1P20950
ORDN    BCI     6,            NTAN                                      A1P20960
ORDNB   BCI     6,            NNORM                                     A1P20970
ORDQ    BCI     6,               Q                                      A1P20980
ORDM    BCI     6,               M                                      A1P20990
ABLBL   BCI     6,              THETA                                   A1P21000
```

```
DISP    BCI     9,          FIG.     CYLINDER DISPLACEMENT COMPONENTS     A1P21010
STRSS   BCI     9,          FIG.     CYLINDER STRESS RESULTANTS           A1P21020
BON     BCI     9,          FIG.     BOUNDARY STRESS RESULTANTS           A1P21030
        END                                                               A1P21040
*       FAP                                                               A1P21050
        COUNT   70                                                        A1P21060
*       FUNCTION ODPSUM (A, T, J, K2, J2)                                 A1P21070
        ENTRY   ODPSUM                                                    A1P21080
ODPSUM  SXA     AXT,1                                                     A1P21090
        SXA     AXT+1,2                                                   A1P21100
        SXA     AXT+2,4                                                   A1P21110
        CLA     1,4                                                       A1P21120
        STA     DP1                                                       A1P21130
        STA     DP1+1                                                     A1P21140
        LXA     ROWD,1                                                    A1P21150
        SXD     DP2,1                                                     A1P21160
        CLA*    2,4                                                       A1P21170
        ARS     18                                                        A1P21180
        STA     I                                                         A1P21190
        CLA*    4,4                                                       A1P21200
        ARS     18                                                        A1P21210
        STA     K2                                                        A1P21220
        ADD     K                                                         A1P21230
        SUB     T                                                         A1P21240
        XCA                                                               A1P21250
        MPY     ROWD                                                      A1P21260
        XCA                                                               A1P21270
        ADD     T                                                         A1P21280
        SUB     =1                                                        A1P21290
        PAX     ,1                                                        A1P21300
        CLA*    3,4                                                       A1P21310
        ARS     18                                                        A1P21320
        STA     T                                                         A1P21330
        CLA     ROWD                                                      A1P21340
        ADD     =1                                                        A1P21350
        SUB     I                                                         A1P21360
        TZE     DP                                                        A1P21370
        CLA     ROWD                                                      A1P21380
        SUB     =1                                                        A1P21390
```

```
        PAC     ,2                                      A1P21400
        SXD     DP3,2                                   A1P21410
        CLA     I                                       A1P21420
        ADD     K                                       A1P21430
        SUB     K2                                      A1P21440
        XCA                                             A1P21450
        MPY     ROWD                                    A1P21460
        XCA                                             A1P21470
        SUB     =1                                      A1P21480
        ADD     K2                                      A1P21490
        PAX     ,2                                      A1P21500
        TRA     DP0                                     A1P21510
DP      AXT     1,2                                     A1P21520
        SXD     DP3,2                                   A1P21530
        CLA     K                                       A1P21540
        ADD     K                                       A1P21550
        ADD     =1                                      A1P21560
        XCA                                             A1P21570
        MPY     ROWD                                    A1P21580
        XCA                                             A1P21590
        ADD     K2                                      A1P21600
        SUB     =1                                      A1P21610
        PAX     ,2                                      A1P21620
DP0     CLA*    5,4                                     A1P21630
        ARS     18                                      A1P21640
        SUB     K2                                      A1P21650
        ADD     =1                                      A1P21660
        PAX     ,4                                      A1P21670
        STZ     TEMP                                    A1P21680
        STZ     TEMP+1                                  A1P21690
DP1     LDQ     **,1                                    A1P21700
        FMP     **,2                                    A1P21710
        DFAD    TEMP                                    A1P21720
        DST     TEMP                                    A1P21730
DP2     TXI     *+1,1,**                                A1P21740
DP3     TXI     *+1,2,**                                A1P21750
        TIX     DP1,4,1                                 A1P21760
AXT     AXT     **,1                                    A1P21770
        AXT     **,2                                    A1P21780
```


LOCKHEED MISSILES & SPACE COMPANY

```
        AXT     **,4                                                    A1P21790
        TRA     6,4                                                     A1P21800
ROWD    DEC     270                                                     A1P21810
K       DEC     5                                                       A1P21820
I       PZE                                                             A1P21830
K2      PZE                                                             A1P21840
TEMP    BOOL    77774                                                   A1P21850
        END                                                             A1P21860
*       EAP                                                             A1P21870
        COUNT   170                                                     A1P21880
*       SUBROUTINES RTAPE, WTAPE, BACK, AND RESET                       A1P21890
        ENTRY   WTAPE                                                   A1P21900
        ENTRY   RTAPE                                                   A1P21910
        ENTRY   REW                                                     A1P21920
        ENTRY   BACK                                                    A1P21930
        ENTRY   RESET                                                   A1P21940
WTAPE   CLA     WRS                                                     A1P21950
        STD     WRTP                                                    A1P21960
        STZ     FLAG1      SET FLAG1 FOR WRITING                        A1P21970
        TRA     BEGIN                                                   A1P21980
RTAPE   CLA     RDS                                                     A1P21990
        STD     WRTP     READ,  NOT WRITE                               A1P22000
        STL     FLAG1     SET FOR READING                               A1P22010
BEGIN   SXA     AXT,1                                                   A1P22020
        SXA     AXT+1,2                                                 A1P22030
        STZ     FLAG     FIRSTT TIME THROUGH                            A1P22040
        CLA*    1,4                                                     A1P22050
        STA     BSR                                                     A1P22060
        ANA     MASK                                                    A1P22070
        TZE     *+3                                                     A1P22080
        STL     FLAG2    SET FLAG2 FOR CAANNEL A                        A1P22090
        TRA     *+2                                                     A1P22100
        STZ     FLAG2     SET FLAG2 FOR CHANNEL B                       A1P22110
        NZT*    4,4     IS THIS A CHECK                                 A1P22120
        TRA     WR       GO AND START A READ OR WRITE                   A1P22130
CK      TZE     CKB      CHECK FOR REDUNDANCY.                          A1P22140
CKA     TCOA    *                                                       A1P22150
        TRCA    ERR                                                     A1P22160
        TRA     AXT                                                     A1P22170
```

```
CKB     TCOB    *                                                    A1P22180
        TRCB    ERR                                                  A1P22190
        TRA     AXT                                                  A1P22200
ERR     ZET     FLAG     TAPE ERROR.   IS THIS THE FIRST TIME        A1P22210
        TRA     BLNK    NO                                           A1P22220
        STL     FLAG                                                 A1P22230
BSR     BSR     **                                                   A1P22240
WR      CLA*    3,4                                                  A1P22250
        STD     IOC      WORD COUNT                                  A1P22260
        ARS     18                                                   A1P22270
        SSM                                                          A1P22280
        ADD     2,4                                                  A1P22290
        ADD     =1      BOTTOM OF ARRAY IN AC                        A1P22300
        STA     IOC                                                  A1P22310
        CLA*    1,4                                                  A1P22320
        STA     WRTP       SET TAPE UNIT ADDRESS                     A1P22330
        ANA     TPNR     PICK OUT LAST DIGIT                         A1P22340
        PAX     ,1     TAPE M.     M TO XR 1                         A1P22350
        CLA     TPCNT+1,1                                            A1P22360
        STA     LD1                                                  A1P22370
        STA     COMP                                                 A1P22380
        STA     STORE                                                A1P22390
        PDX     ,2                                                   A1P22400
LD1     LDQ     **,2                                                 A1P22410
        ZET     FLAG      IF RERUN,  DONT BUMP COUNTERS              A1P22420
        TRA     RERUN                                                A1P22430
        SSP              NOT A BACKSPACE SO SIGN PLUS                A1P22440
        ADD     ONE                                                  A1P22450
        PDX     ,2                                                   A1P22460
        STD     TPCNT+1,1                                            A1P22470
        STA     TPCNT+1,1                                            A1P22480
        ZET     FLAG1     IS IT READ OR WRITE                        A1P22490
        TRA     WR1    READ OPEARATION                               A1P22500
        XCA          WRITE OPERATION.  MUST MAKE UP NEXT RECORD ID NR. A1P22510
        ADD     ONE                                                  A1P22520
        ADD     =1                                                   A1P22530
STORE   STO     **,2    STORE NEXT RECORD ID WORD IN TABLE           A1P22540
        STO     IDENT     FIRST WORD OF RECORD                       A1P22550
WR1     NZT     FLAG2    CHANNEL A OR B                              A1P22560
```

```
        TRA     TPB                                                     A1P22570
TPA     TCOA    *                                                       A1P22580
        TRCA    *+1                                                     A1P22590
        XEC     WRTP                                                    A1P22600
        RCHA    ICID                                                    A1P22610
        LCHA    IOC                                                     A1P22620
        ZET     FLAG1      IF READING.  GO CHECK RECORD ID              A1P22630
        TRA     COMP                                                    A1P22640
        ZET     FLAG     IS THIS A RERUN                                A1P22650
        TRA     CKA    YES.  GO AND CHECK FOR REDUNDANCY                A1P22660
        TRA     AXT     NO.  GO BACK AND COMPUTE SOME MORE              A1P22670
TPB     TCOB    *                                                       A1P22680
        TRCB    *+1                                                     A1P22690
        XEC     WRTP                                                    A1P22700
        RCHB    ICID                                                    A1P22710
        LCHB    IOC                                                     A1P22720
        ZET     FLAG1                                                   A1P22730
        TRA     COMP                                                    A1P22740
        ZET     FLAG                                                    A1P22750
        TRA     CKB                                                     A1P22760
        TRA     AXT                                                     A1P22770
COMP    CLA     **,2                                                    A1P22780
        SUB     IDENT     DOES FIRST WORD OF RECORD AGREE WITH ID       A1P22790
        TNZ     SHIFT     NO.   TRY ANOTHER RECORD                      A1P22800
        STP     TPCNT+1,1                                               A1P22810
        NZT     FLAG     YES.  IS THIS A RERUN                          A1P22820
        TRA     AXT      IF NOT,  GO BACK                               A1P22830
        CLA     FLAG2                                                   A1P22840
        TRA     CK                                                      A1P22850
RERUN   ZET     FLAG1                                                   A1P22860
        TRA     WR1                                                     A1P22870
        XCA          RESET ID WORD                                      A1P22880
        TRA     STORE+1                                                 A1P22890
BLNK    ZET     FLAG1    IS THIS A READ                                 A1P22900
        TRA     OUT    IF SO GIVE UP                                    A1P22910
        XEC     RSP                                                     A1P22920
        XEC     WRTP                                                    A1P22930
        XEC     WRTP                                                    A1P22940
        XEC     WRTP                                                    A1P22950
```

```
        CLA     MAX                                                     A1P22960
        SUB     =1                                                      A1P22970
        TMI     OUT    QUIT AFTER MAX TIMES                             A1P22980
        STO     MAX                                                     A1P22990
        CLA     IDENT                                                   A1P23000
        TRA     STORE-1                                                 A1P23010
SHIFT   CLA     MAX                                                     A1P23020
        SUB     =1                                                      A1P23030
        TMI     OUT                                                     A1P23040
        STO     MAX                                                     A1P23050
        CLA     TPCNT+1,1                                               A1P23060
        TPL     WR1    LAST ACTIVITY WAS READ OR WRITE SO GO AHEAD      A1P23070
        XEC     BSR     LAST ACTIVITY WAS BACKSPACE.  MUST GO BACK      A1P23080
        XEC     BSR                                                     A1P23090
        TRA     WR1    LOOK FOR MISSING RECORD AGAIN                    A1P23100
AXT     AXT     **,1                                                    A1P23110
        AXT     **,2                                                    A1P23120
        TRA     5,4                                                     A1P23130
OUT     CALL    DUMP                                                    A1P23140
REW     CLA*    1,4                                                     A1P23150
        STA     *+1                                                     A1P23160
        REW     **                                                      A1P23170
        SXA     AX,1                                                    A1P23180
        ANA     TPNR                                                    A1P23190
        PAX     ,1                                                      A1P23200
        PXA     0,0                                                     A1P23210
        STD     TPCNT+1,1                                               A1P23220
AX      AXT     **,1                                                    A1P23230
        TRA     2,4                                                     A1P23240
BACK    CLA*    1,4                                                     A1P23250
        STA     BSR                                                     A1P23260
        XEC     BSR                                                     A1P23270
        SXA     BX,1                                                    A1P23280
        ANA     TPNR                                                    A1P23290
        PAX     ,1                                                      A1P23300
        CLA     TPCNT+1,1                                               A1P23310
        SSP                                                             A1P23320
        SUB     ONE                                                     A1P23330
        SSM                                                             A1P23340
```

```
        STO     TPCNT+1,1                                          A1P23350
BX      AXT     ,1                                                 A1P23360
        TRA     2,4                                                A1P23370
        NOP                                                        A1P23380
RESET   PXA     0,0                                                A1P23390
        STD     TPCNT-3                                            A1P23400
        STD     TPCNT-2                                            A1P23410
        STD     TPCNT-1                                            A1P23420
        STD     TPCNT                                              A1P23430
        TRA     1,4                                                A1P23440
ICID    IOST    IDENT,,1                                           A1P23450
IOC     IORT    0,,0                                               A1P23460
WRTP    WRS     **                                                 A1P23470
WRS     WRS     **                                                 A1P23480
RDS     RDS     **                                                 A1P23490
        PZE     TBL4                                               A1P23500
        PZE     TBL3                                               A1P23510
                TBL2                                               A1P23520
TPCNT           TBL1                                               A1P23530
TPNR    OCT     7                                                  A1P23540
MASK    OCT     000000001000                                       A1P23550
MAX     DEC     40                                                 A1P23560
ONE     OCT     1000000                                            A1P23570
FLAG                                                               A1P23580
FLAG1                                                              A1P23590
FLAG2                                                              A1P23600
IDENT   PZE                                                        A1P23610
TBL1    BES     80                                                 A1P23620
TBL2    BES     80                                                 A1P23630
TBL3    BES     80                                                 A1P23640
TBL4    BES     80                                                 A1P23650
                                                                   A1P23660
        END                                                        A1P23670
*       CHAIN (2,2)                                                A1P23680
*       FORTRAN                                                    A1P23690
C       INDEX (1270)                                               A1P23700
C       PROGRAM TO CONTROL PLOTTING FROM SCRATCH TAPE              A1P23710
C       CAN PLOT SEQUENTIAL GRAPHS EACH HAVING SEVERAL CURVES      A1P23720
C       NXP = NUMBER OF VALUES OF INDEPENDENT VARIABLE FOR A GIVEN GRAPH  A1P23730
```

```
C       NCRVS = NUMBER OF CURVES TO BE PLOTTED ON A GIVEN GRAPH          A1P23740
C       NPTS = NUMBER OF INTERVALS BETWEEN DEPENDENT VARIABLE VALUES     A1P23750
C       AT WHICH IDENTIFYING SYMBOLS ARE TO BE PLACED                    A1P23760
C       IF NEND = 0, OTHER GRAPHS ARE TO FOLLOW                          A1P23770
C       IF NEND = 1, CURRENT GRAPH IS THE LAST                           A1P23780
C       IF NFLAG = 0, CONTROL WILL BE RETURNED TO CHAIN (1,3)            A1P23790
C       IF NFLAG = 1, RUN WILL BE TERMINATED BY CALL EXIT                A1P23800
        DIMENSION XP(200),YP(200,4),ABLBL(6),ORDLBL(6),GPHLBL(9),        A1P23810
      1 CILBL(6,4),RECORD(12),YT(200)                                    A1P23820
        EQUIVALENCE (KR,ER), (XXN, NERR)                                 A1P23830
        KP=15                                                            A1P23840
        REWIND KP                                                        A1P23850
B       XXN=255151606060                                                 A1P23860
   20   READ TAPE KP, RECORD                                             A1P23870
        READ TAPE KP, NXP, NCRVS, NPTS, NEND, NFLAG                      A1P23880
        READ TAPE KP, ABLBL, ORDLBL, GPHLBL                              A1P23890
        READ TAPE KP, CILBL                                              A1P23900
        DO 32 KT = 1,NXP                                                 A1P23910
   32   READ TAPE KP, XP(KT)                                             A1P23920
        DO 33 L = 1,NCRVS                                                A1P23930
        DO 33 KT = 1,NXP                                                 A1P23940
        READ TAPE KP, YT(KT)                                             A1P23950
   33   YP(KT,L) = YT(KT)                                                A1P23960
        READ TAPE KP,ER                                                  A1P23970
        BACKSPACE KP                                                     A1P23980
        IF (KR-NERR) 61, 60, 61                                          A1P23990
   60   NEND=1                                                           A1P24000
   61   CONTINUE                                                         A1P24010
        CALL PLOTS(NXP,NCRVS,NPTS,NEND,NFLAG,XP,YP,RECORD,ABLBL,ORDLBL,  A1P24020
      1 GPHLBL,CILBL)                                                    A1P24030
        IF(NEND)20,20,21                                                 A1P24040
   21   IF(NFLAG)40,40,41                                                A1P24050
   40   CALL CHAIN (1,2)                                                 A1P24060
   41   CALL EXIT                                                        A1P24070
        END                                                              A1P24080
*       FORTRAN                                                          A1P24090
        SUBROUTINE PLOTS(NXP,NCRVS,NPTS,NEND,NFLAG,X,Y,RECORD,ABLBL,     A1P24100
      1 ORDLBL,GPHLBL,CILBL)                                             A1P24110
C       SC 4020 ROUTINE FOR PLOTTING SEVERAL CURVES ON A SINGLE GRAPH    A1P24120
```

```
C     INDEX (1280)                                                      A1P24130
      DIMENSION X(200),Y(200,4),ABLBL(6),ORDLBL(6), GPHLBL(9),RECORD(12)A1P24140
      DIMENSION KX1(4),KY1(4),KX2(4),CILBL(6,4),CLBL(6),                A1P24150
     1 ORDL(6),GPHL(6),YP(200),MRK(4)                                   A1P24160
      WRITE OUTPUT TAPE 6,10                                            A1P24170
   10 FORMAT(15H0  PLOT CALLED       )                                  A1P24180
F     TABL1V                                                            A1P24190
      CALL CAMRAV(9)                                                    A1P24200
      XL = X(1)                                                         A1P24210
      XR = X(1)                                                         A1P24220
      DO 20 I = 2,NXP                                                   A1P24230
      XL = MIN1F(XL,X(I))                                               A1P24240
   20 XR = MAX1F(XR,X(I))                                               A1P24250
      DC = 20.0                                                         A1P24260
      CALL DXDYV(1,XL,XR,DX,N,II,NX,DC,IERR)                            A1P24270
      KX1(1) = 185                                                      A1P24280
      KX1(2) = 185                                                      A1P24290
      KX1(3) = 585                                                      A1P24300
      KX1(4) = 585                                                      A1P24310
      KY1(1) = 985                                                      A1P24320
      KY1(2) = 955                                                      A1P24330
      KY1(3) = 985                                                      A1P24340
      KY1(4) = 955                                                      A1P24350
      KX2(1) = 200                                                      A1P24360
      KX2(2) = 200                                                      A1P24370
      KX2(3) = 600                                                      A1P24380
      KX2(4) = 600                                                      A1P24390
      MRK(1) = 38                                                       A1P24400
      MRK(2) = 55                                                       A1P24410
      MRK(3) = 63                                                       A1P24420
      MRK(4) = 53                                                       A1P24430
      YB = 0.0                                                          A1P24440
      YT = 0.0                                                          A1P24450
      DO 40 J = 1,NCRVS                                                 A1P24460
      DO 40 I = 2,NXP                                                   A1P24470
      YB = MIN1F(YB,Y(I,J))                                             A1P24480
   40 YT = MAX1F(YT,Y(I,J))                                             A1P24490
      YB = YB*1.10                                                      A1P24500
      YT = YT*1.10                                                      A1P24510
```

```
      L = 1                                                             A1P24520
      CALL DXDYV(2,YB,YT,DY,M,JJ,NY,DC,IERR1)                           A1P24530
      NX = + 3                                                          A1P24540
      NY=-2                                                             A1P24550
      II = -II                                                          A1P24560
      JJ = -JJ                                                          A1P24570
      CALL SETMIV(100,10,70,100)                                        A1P24580
      CALL GRIDIV(L,XL,XR,YB,YT,DX,DY,N,M,II,JJ,NX,NY)                  A1P24590
      DO 60 K = 1,6                                                     A1P24600
   60 ORDL(K) = ORDLBL(K)                                               A1P24610
      CALL CHSIZV(2,2)                                                  A1P24620
      CALL RITSTV(12,18,TABL1V)                                         A1P24630
      CALL RITE2V(75,330,1023,180,1,36,1,ORDL,NLAST)                    A1P24640
      CALL RITE2V(330,57,1023,90,1,36,1,ABLBL,NLAST)                    A1P24650
      CALL PRINTV(72,RECORD,100,1015)                                   A1P24660
      DO 61 K = 1,9                                                     A1P24670
   61 GPHL(K) = GPHLBL(K)                                               A1P24680
      CALL CHSIZV(3,4)                                                  A1P24690
      CALL RITSTV(18,30,TABL1V)                                         A1P24700
      CALL RITE2V(40,20,1023,90,2,54,1,GPHL,NLAST )                     A1P24710
      DO 70 J = 1,NCRVS                                                 A1P24720
      YP(1) = Y(1,J)                                                    A1P24730
      NX1 = NXV(X(1))                                                   A1P24740
      NY1 = NYV(YP(1))                                                  A1P24750
      DO 50 I = 1,NXP                                                   A1P24760
      YP(I) = Y(I,J)                                                    A1P24770
      NX2 = NXV(X(I))                                                   A1P24780
      NY2 = NYV(YP(I))                                                  A1P24790
      IF(NX2*NY2)45,50,45                                               A1P24800
   45 CALL LINEV(NX1,NY1,NX2,NY2)                                       A1P24810
      NX1 = NX2                                                         A1P24820
      NY1 = NY2                                                         A1P24830
   50 CONTINUE                                                          A1P24840
      MRKPT = MRK(J)                                                    A1P24850
      CALL APLOTV(NXP,X,YP,NPTS,NPTS,1,MRKPT,IERR)                      A1P24860
      KX = KX1(J)                                                       A1P24870
      KY = KY1(J)                                                       A1P24880
      NS = J                                                            A1P24890
      CALL POINTV(KX,KY,NS,ANY)                                         A1P24900
```

```
      KXC = KX2(J)                                                      A1P24910
      DO 93 K = 1,6                                                     A1P24920
   93 CLBL(K) = CILBL(K,J)                                              A1P24930
   92 CALL PRINTV(36,CLBL,KXC,KY)                                       A1P24940
   70 CONTINUE                                                          A1P24950
      IF(NEND)90,90,91                                                  A1P24960
   91 CALL EOFTV                                                        A1P24970
      WRITE OUTPUT TAPE 6,80                                            A1P24980
   80 FORMAT(22H0  PLOTTING COMPLETED        )                          A1P24990
   90 RETURN                                                            A1P25000
      END                                                               A1P25010
```