TECHNICAL NOTE R-122

TECHNICAL NOTE R-122

Temp 29417

THERMAL ANALYSIS OF A MOBILE LUNAR LABORATORY

N66-14291

FACILITY FORM 602

(ACCESSION NUMBER) 73	(THRU) 1
(PAGES) Cr 68980	(CODE) 11
(NASA CR OR TMX OR AD NUMBER)	(CATEGORY)

by Dr. Lawrence Conway

and R. Darrel McGinnes

October 1964

GPO PRICE $ _____

CFSTI PRICE(S) $ _____

Hard copy (HC) _____

Microfiche (MF) _____

ff 653 July 65

RESEARCH LABORATORIES

BROWN ENGINEERING COMPANY, INC

HUNTSVILLE, ALABAMA

TECHNICAL NOTE R-122

THERMAL ANALYSIS OF A MOBILE LUNAR LABORATORY

October 1964

Prepared For

FLUID MECHANICS AND THERMODYNAMICS BRANCH
PROPULSION DIVISION
P&VE LABORATORY
GEORGE C. MARSHALL SPACE FLIGHT CENTER

By

RESEARCH LABORATORIES
BROWN ENGINEERING COMPANY, INC.

Contract No. NAS8-5289

Prepared By

Dr. Lawrence Conway
R. Darrel McGinnes

ABSTRACT

14291

This report describes a thermodynamic analysis and FORTRAN IV program for calculating the time dependent internal atmospheric temperature within a body which is close to the lunar surface. The body may be of any shape and thermally insulated. The analysis and programs have the capacity to include heat releases inside the body, selective emissivities on the outer surface of the body, any orientation and position on the lunar surface and up to five different temperature-dependent thermal insulations disposed around the body surface.

Author

Approved

C. E. Kaylor

C. E. Kaylor, Ph. D.
Director, Mechanics and
Propulsion Laboratories

Approved

R. C. Watson

R. C. Watson, Jr.
Director of Research

TABLE OF CONTENTS

	Page
INTRODUCTION	1
ANALYSIS	2
Reduction of Problem	2
Development of the Equations	7
THE FORTRAN PROGRAM	11
Description of Program Routines	11
Input Data	13
Output Data	16
Program Listing	18
CONCLUSIONS	44
REFERENCES	45
APPENDIX I. LOGICAL PROCEDURE FOR ANALYZING A MOLAB	46
APPENDIX II. DERIVATION OF LOCAL OUTER SURFACE TEMPERATURE, F_{1ij}	55

LIST OF FIGURES

Figure		Page
1	Illustration of MOLAB Triangle Notation	48
2	Representation of MOLAB Interior Heat Release	53
3	Derivation of MOLAB Triangle Outward Normal	58
4	Orientation of Local Lunar Surface Coordinates	61
5	Transformation from Local Lunar Surface Coordinates to MOLAB Fixed Coordinates	62

LIST OF SYMBOLS

A	Area of a triangle
$\overline{A}$	Convenient computational grouping of terms
A_1	Area of MOLAB outer surface
A_m	Area of moon within the view of a MOLAB triangle
B	Semi-empirical constant which assesses the effect of the inclination of a triangle on its heat transfer coefficient
C	Colongitude of the sun at 00.00 GMT in selenocentric coordinates
C_{pg}	Specific heat at constant pressure of MOLAB interior atmosphere
C_v	Thermal capacity of the interior of the MOLAB
E_m	Emissive power of the lunar surface
e_{1ot1}, e_{1ots}, e_{1otm}	Emissivity (or absorptivity) of a triangle undergoing the following thermal radiations, respectively: at the temperature of the triangle; at solar temperatures; at lunar surface temperatures
F	Absolute temperature
F_{1m}, F_{m1}	Shape factor for, respectively: δA_1 to lunar surface and lunar surface to δA_1
G	Mean solar heat flux on lunar surface
g_m	Lunar gravitational acceleration
h	Heat transfer coefficient from triangle to MOLAB interior atmosphere
k	Thermal conductivity of insulation
k_g	Thermal conductivity of MOLAB interior atmosphere

L	Thickness of triangle insulation
L_{mean}	Mean length of the triangles
ℓ	Direction cosine in "x" direction
m	Direction cosine in "y" direction
NTRI	Number of triangles defining MOLAB
N_{Nu}	Nusselt number
N_{Ra}	Rayleigh number
N_x, N_y, N_z	Convenient computational parameters
n	Direction cosine in "z" direction
p	Number of points defining the MOLAB
$\dot{q}$	Rate of heat flow
r_m	Reflectivity of the lunar surface to solar radiation
S	Convenient computational parameter
t	Time
$\left.\begin{matrix} x \\ y \\ z \end{matrix}\right\}$	Cartesian coordinates
α	Convenient computational constant
β	Selenocentric latitude
γ	Coefficient of cubical expansion
ε	Angle between triangle outward normal and solar direction
θ	Angle between MOLAB fixed "x" axis and selenographic east

λ	Selenocentric longitude
μ	Viscosity
ρ	Density
σ	Stefan-Boltzmann constant
τ	Period of lunar cycle
ψ	Inclination of triangle normal to vertical

SUBSCRIPTS

Those symbols having a single subscript are identified by the following code.

2	Refers to solar directions in lunar surface fixed coordinates (see Figures 4 and 6)
g	Refers to MOLAB interior atmosphere
gross	Refers to total rate of energy acceptance by MOLAB interior atmosphere
n	Refers to triangle outward normal directions in MOLAB fixed coordinates (see Figure 5)
s	Refers to solar directions in MOLAB fixed coordinates

Those symbols having three subscripts are identified by the following code.

1st Subscript.	Identification Symbol
0	Identify by major symbol
1	Refers to MOLAB outer surface conditions
2	Refers to conditions at center of insulation
3	Refers to MOLAB inner surface conditions
4	Refers to MOLAB interior atmosphere conditions

n	Refers to heat flux through one triangular area
r	Refers to random heat releases inside MOLAB
t	Refers to heat fluxes summed over every triangle
u	Refers to heat fluxes per unit triangle area

2nd Subscript. Triangle number

o	Independent of triangle number
i	Refers to any triangle, "i"

3rd Subscript. Time number

o	Independent of time
1	Instant of MOLAB release on lunar surface
j	Refers to any time, "j"

INTRODUCTION

It has been proposed to send a manned mobile lunar laboratory to the moon in advance of the eventual astronauts. This vehicle, usually called the MOLAB, is to wait for a period of up to six months before the astronauts arrive. While waiting on the moon, most of the systems on the MOLAB will be tested from earth and a number of scientific experiments will be conducted. One of the criteria of the effectiveness of the instruments which will perform these tests is whether their ambient temperature (i. e., the cab interior temperature) falls within certain prescribed limits. Consequently, a thermodynamic analysis of the MOLAB and its environment before it is launched is of the utmost importance.

This report is an account of a simplified thermodynamic analysis of an arbitrarily shaped MOLAB. The main dependent variable was chosen to be the MOLAB cabin atmospheric temperature and a method of calculating this as a function of time is presented. The analysis was kept simple for brevity in calculation. Consequently, the simplifications are cardinal points in the analysis and are discussed in a section by themselves, namely, "Reduction of the Problem".

ANALYSIS

Reduction of the Problem

The equations which define the heat fluxes are much too complicated for an exact theoretical analysis; consequently, the analysis was oriented towards an approximate numerical solution.

The problem is amenable to splitting into the following three sections:

1. Determination of the outside wall temperature.
2. Determination of the heat fluxes through the insulations and integration of these around the surface to determine the net heat flux into the cab interior.
3. Integration, with respect to time, of the net heat flux into the cab to determine the time dependence of the cab atmospheric temperature.

For exactness, all three sections need to be solved simultaneously. However, it is possible to make an accurate calculation of the outside wall temperature independently of sections 2 and 3. This possibility arises because, for practically all circumstances, the heat flux per unit area conducted from the outer skin through the high quality thermal insulation is very small compared with the other heat fluxes flowing into the unit area, e.g., those due to solar and lunar radiation. Consequently, omitting the heat leak through the insulation has a negligible effect on an outer surface heat balance. While discussing the outer surface, it is convenient at this point to discuss some further simplifications in which it is involved.

A number of considerations suggested neglecting the conduction of heat around the surface. This conduction around the surface varies considerably in magnitude depending, as it does, upon the local temperature gradients and the thermal resistance of the metals.

The net effect it has upon the temperature distribution is to smooth it out and tend to make all temperatures equal. However, over large sections of the MOLAB, particularly near noon and during the lunar night, many of the temperature gradients are small and consequently surface conduction may be neglected. Thus, for many conditions, it is sufficiently accurate to calculate the surface temperature as if it were adiabatic with respect to conduction. This allows an enormous reduction in computation labors.

The heat fluxes which fall upon a surface element of the MOLAB come from mainly three sources: the sun, the lunar surface, and from other parts of the MOLAB. There are also an infinite number of reflections. However, the magnitude of these reflections rapidly falls away and there is only one of any consequence, this being from sun to lunar surface to MOLAB. Thus, the remainder may be neglected. Furthermore, for practically all of the surface, any surface element cannot see any other part of the vehicle and if it does, it does so at a small angle; thus, radiation from other parts of the MOLAB was also neglected. If this radiation were required to be taken into account, then some definite shape of the body would have to be specified; hence, the heat radiations incident on any surface element which are utilized are: direct solar, direct lunar, and solar reflected from the lunar surface. At this point it is appropriate to mention that the lunar surface radiation and reflected solar radiation from the lunar surface are assumed to be coming from an infinite isothermal flat plane, obeying Lambert's cosine law, within the view of the element. The justifications for this are as follows. Every effort will be made to land the MOLAB in a mare. Thus, the surface will be reasonably level. Furthermore, even at the highest point on a MOLAB, for distances greater than about 400 yards, the greatest radiation intensity in the direction of the MOLAB will only be of the order of 1% of the normal radiation intensity at this point, and thus lunar surface curvature, and indeed temperature variation, may be neglected.

A further approximation was included when assessing the radiant heat fluxes incident upon any element. This was that the effect of the MOLAB's shadow upon the lunar surface was neglected. This was again enforced by the lack of having a prescribed shape for the vehicle.

Representing the shape of the surface of the vehicle was accomplished by allowing up to 32 points to be used to describe it. These 32 points, each having a point number ascribed to it, form 60 triangles and each triangle was described by the three apex numbers, taken in any counterclockwise order when viewed from the outside; mean emissivity of the MOLAB outer surface at its own temperature; mean absorptivity of MOLAB outer surface to lunar surface temperatures; mean absorptivity of MOLAB outer surface to solar radiation; thermal conductivity number (explained below); thickness of insulation between MOLAB outer surface and vehicle interior.

The thermal conductivity number, mentioned in the above list, refers to a method of coding the insulations. The insulations are allowed to belong to up to five categories, thermal conductivities of which may be functions of the linear average temperature of the particular insulation. The thermal conductivity number refers to the insulation backing this particular triangle.

The equation which defines the temperature distribution through the insulation was also rigorously simplified. A fundamental assumption was that the temperature distribution was always linear with distance through the insulation. This is clearly never true but because of the large period of the lunar cycle for many circumstances it is sufficiently accurate. The accuracy becomes less as the thermal diffusivity decreases.

The transport of the heat into the cab interior is predominantly one of natural convection; radiation being negligible because the temperature variation throughout the cab is small. However, no data exists for the calculation of natural convection with the boundary conditions pertaining

in the problem. Consequently, it was decided to use the flat-plate relationships and amend them somewhat in an effort to make them coincide with the realities of the problem.

Inherent in most free convection analyses is a reliance upon the Rayleigh Number, Ra, which is

$$Ra \equiv \frac{L^3 \rho_g^2 g_g \gamma C_{p_g} \Delta F}{\mu_g k_g} .$$

This dimensionless variable is first utilized to determine which regime of heat transfer is taking place and secondly in evaluating the magnitude of the Nusselt Number. However, the temperature difference, ΔF, is usually a dependent variable and some sort of iterative process must be utilized to solve the problem.

Preliminary calculations indicated that most of the heat transport would occur under laminar flow conditions; thus it was decided to standardize for all triangles on the laminar flow relationships.

Flat-plate analysis suggests that laminar flow heat transport is correlated by a formula of the form

$$N_{Nu} = \text{constant} \times N_{Ra}^{\frac{1}{4}} .$$

Expanding the dimensionless terms, N_{Nu} and N_{Ra}, and transposing this equation gives

$$h \approx L^{-\frac{1}{4}} .$$

The boundary conditions of the MOLAB triangles have no easily defined distance, L, from the leading edge. To overcome this discrepancy, an attempt was made to utilize a "mean" length. Fortunately, because the fourth root of the length is utilized, the heat transfer coefficient is relatively insensitive to variations in "L". Thus, using a length of 0.79 ft

allows a maximum error of only 25% over a range of actual lengths from 0.25 ft to 2.0 ft.

The "constant" in the expression for the Nusselt Number depends upon the inclination of the triangle and usually upon whether it is heated or cooled. Data for natural convection upon plates which are inclined other than at 90° or 0° to the vertical are meager; also much of it is difficult to apply in a systematic manner. Consequently, the values of the constant at inclinations of 90° or 0° to the vertical were used to linearly interpolate the values for other inclinations. With the above assumptions and a knowledge of the instantaneous interior cab temperature, it is thus possible to compute the rate of heat flow through a triangle. The complication of this latter calculation is reduced if those gaseous properties which are functions of temperature are taken to be constant at some "mean" atmospheric temperature. This simplification is again particularly accurate because these properties are only introduced as fourth root products. In particular, the coefficient of expansion, γ, which is the reciprocal of the absolute temperature for a perfect gas, was held constant at the value determined by the internal atmospheric temperature chosen at the start of the calculations. A simple summation over all of the triangles then gives the net rate of heat flow into the cab.

It was mentioned earlier that a number of tests will be made with instruments inside the MOLAB. These devices will naturally dissipate heat. An exact calculation for the rate of heat release would require solving a heat balance for the device simultaneously with the other heat fluxes. This complication was avoided by specifying that the rate of heat release for all devices must be known functions of time. Thus, the gross heat addition to the cab interior is the summation of the net heat flux from the lunar environment and whatever heat is released internally.

The dispersion of this heat flux inside the cab is supposed to be uniform such that the entire contents are at a uniform temperature and

suffer a uniform rate of temperature increase. The thermal capacity of this essentially constant volume container is all that is required to bring about the ultimate differential equation

$$\dot{q}_{gross} = C_v \frac{dF_{4oj}}{dt} \quad . \tag{1a}$$

It is clearly impossible to solve this differential equation using analytic methods; consequently, numerical integration was utilized.

Development of the Equations

The object of the analysis is to determine the inside cab temperature, F_{4oj}, as a function of time. To demonstrate the analysis required to obtain F_{4oj}, it is easiest to work in roughly the reverse order of the solution as follows.

The temperature, F_{4oj}, is evaluated by solving the differential equation (1a) which is

$$\frac{dF_{4oj}}{dt} = \frac{\dot{q}_{gross}}{C_v} \quad . \tag{1b}$$

As will be clear from what follows, there was no possibility for an analytic solution and a numerical solution was utilized. The form of the differential equation and boundary conditions suggested the use of the Runge-Kutta method. Two papers by Miller and Miller[4, 5], demonstrate a Runge-Kutta method which automatically chooses the maximum time step which the accuracy bounds will allow and a small amendation of their method was utilized. The derivation of this equation and the evaluation of C_v has been explained in another section, "Reduction of the Problem". However, it is necessary to demonstrate the method of evaluating the function of time $\dot{q}_{gross}$. The term, $\dot{q}_{gross}$, is the summation of the heat flux into the cab, $\dot{q}_{toj}$, and the heat releases by instruments, etc., $\dot{q}_{roj}$.

The heat releases inside the cab, $\dot{q}_{roj}$, occur whenever the operators of the MOLAB decide to activate any devices, and consequently rank as input data. The heat fluxes passing into the cab from the exterior, $\dot{q}_{toj}$, are really the crux of the problem. This flux is the summation of the heat passing through all the triangles, $\dot{q}_{nij}$, thus

$$\dot{q}_{toj} = \sum_{i=1}^{NTRI} \dot{q}_{nij} \quad . \tag{2}$$

As it is most convenient to evaluate the heat fluxes through each triangle in terms of the unit area, we have

$$\dot{q}_{uij} = \frac{\dot{q}_{nij}}{A_{oio}} \quad . \tag{3}$$

At this stage it is not necessary to evaluate each of the variables explicitly, but only to demonstrate that sufficient simultaneous equations are possible to solve for the appropriate unknowns. Thus, it is possible to arrive at the following:

Heat Flux Through Insulation

$$\dot{q}_{uij} = \frac{k_{oij}\,(F_{1ij} - F_{3ij})}{L_{oio}} \tag{4}$$

Heat Flux From Inner Wall

$$\dot{q}_{uij} = h_{oij}\,(F_{3ij} - F_{4oj}) \tag{5}$$

Thermal Conductivity Tables

$$k_{oij} = k_{oij}[\,(F_{1ij} + F_{3ij})/2] \tag{6}$$

that is, an input table of k_{oij} versus temperature.

Evalution of Nusselt Number

$$h_{oij} = 1.06\, B_{oio}\, \alpha\, |F_{3ij} - F_{4oj}|^{\frac{1}{4}} \tag{7}$$

where

$$\alpha = \left(\frac{k_g^{\,3}\, C_{pg}\, g_m\, \rho_g^{\,2}}{\mu_g\, F_g}\right)^{\frac{1}{4}}; \qquad 1.06 = \left(\frac{1}{L_{mean}}\right)^{\frac{1}{4}} = \left(\frac{1}{0.79}\right)^{\frac{1}{4}}$$

and B_{oio} is determined from the following table.

	$F_{1ij} - F_{4ij} < 0$		$F_{1ij} - F_{4ij} = 0$	$F_{1ij} - F_{4ij} > 0$	
	$\psi - \frac{\pi}{2} \leqq 0$	$\psi - \frac{\pi}{2} > 0$		$\psi - \frac{\pi}{2} \leqq 0$	$\psi - \frac{\pi}{2} > 0$
B_{oio}	$0.54 + \frac{\psi}{10\pi}$	$0.93 - \frac{0.68\psi}{\pi}$	0	$0.25 + \frac{0.68\psi}{\pi}$	$0.64 - \frac{\psi}{10\pi}$

$$F_{1ij} = \left\{\frac{(1 - n_n)\,[e_{1otm}\, E_m + (e_{1ots}\, r_m\, G n_s)_{ii}] + (2\, e_{1ots}\, G \cos\varepsilon)_i}{2\, e_{1ot1}\, \sigma}\right\}^{\frac{1}{4}} \tag{8}$$

when $n_s \geqq 0$ and $\cos\varepsilon < 0$, neglect $(\quad)_i$, and when $n_s < 0$, neglect $(\quad)_{ii}$ and $(\quad)_i$.

The derivations of Equations 4, 5, 6, and 7 are trivial and can be done by inspection. However, the derivation for Equation 8 is lengthy and is reserved for Appendix II.

The solution of this system of equations was most easily accomplished by a rearrangement to give the following:

$$0 = F_{1ij} - F_{3ij} + \frac{S\, 1.06\, \alpha\, B_{oio}\, L_{oio}}{k_{oij}}\, |F_{3ij} - F_{4oj}|^{1.25} \tag{9}$$

when $F_{1ij} - F_{4oj} < 0$, then $S = 1$; and when $F_{1ij} - F_{4oj} > 0$, then $S = -1$.

Solution of Equation 9 (see Subroutine CALF3) for the variable F_{3ij} was accomplished by a systematic trial and error method. The more normal method of iteration was not used because the wide variation in the parameters gave trouble in convergence.

THE FORTRAN PROGRAM

Description of Program Routines

The program consists of a MAIN calling routine and eight subroutines. A brief description of the purpose of each routine is as follows:

MAIN - The Calling Routine

The functions of this calling routine are:

1. Read from the card reader the input information for the integration routine, RUNGKT
2. To give control to that routine
3. Later, to write an end of job message
4. To terminate the program.

RUNGKT

This is the basic Runge-Kutta integration which advances from the boundary conditions. Subroutine DERIV is called by RUNGKT to calculate the differential at any point in time and Subroutine RUNGKT adjusts the time step size to the maximum which the tolerances and differential equation will allow. It also fixes the interval at which the output data is printed. A comprehensive description of this subroutine is given in References 4 and 5.

DERIV

This calculates the differential given in Equation 1b at any point in time. To do this it calls the following subroutines.

BOUND

This sets up tables of MOLAB outer surface temperature, F4IJ, for 60 different times over a cycle for each triangle.

CALF3

This calculates the MOLAB inner wall temperature for each triangle using Equation 9. The method used is systematic trial and error.

SUR. F1

This interpolates inside the tables set up in BOUND to find the outer surface temperature for each triangle, F1IJ, at any instant.

COND

This interpolates in the input data of thermal conductivity against temperature for each insulation at any temperature.

HEAT

This selects which points in the table of TR and QR the instant of time falls between and then it linearly interpolates between these values to find the value of QR at that time.

ARCOS

The function ARCOS is not part of the routine on an IBM 7040. Consequently this subroutine is used to calculate ARCOS and it enables the angle between the outside normal to a triangle and the vertical to be determined from a knowledge of the vertical direction cosine.

Input Data

Variable	Card	Column	Definition of Variable
NCI	001	7 - 9	The number of times integration will be forced at a minimum step size before the routine will be stopped for nonconvergence. (Approx. 10)
P	001	10 - 19	The maximum allowable step size in hours. This affects the machine time necessary for the run but it does not affect the accuracy. Optimum value depends on irregularities in the differential equation (e.g., 8.0 hours).
TP	001	20 - 29	The print interval (in hours). Time and Cab Temperature are printed out at times $T_1 + n \cdot TP$ where n is an integer. This does not affect the computations unless it is less than P; if this happens P is assumed to equal TP (e.g., 8.0 hours).
TE	001	30 - 39	The value of time in hours from 00.00 GMT at which the program is to be terminated.
E1	001	40 - 49	The lower bound for controlling step size. E1 is dimensionless (e.g., 10^{-4} to 10^{-6}).
E2	001	50 - 59	The upper bound for controlling step size. E2 is dimensionless (usually = 100 × E1, i.e., 10^{-2} to 10^{-4}).
LAM	002	1 - 10	Longitude of MOLAB on the moon in degrees, (λ).
BETA	002	11 - 20	Latitude of MOLAB on the moon in degrees, (β).
C	002	21 - 30	The colongitude of sun in selenocentric coordinates at 00.00 hours, GMT in degrees, (C).
THETA	002	31 - 40	Angle between "x" axis of MOLAB and Lunar East in degrees, (θ).

Variable	Card	Column	Definition of Variable
CV	002	41 - 51	Thermal capacity of complete cab contents in BTU/°F, (C_v).
RMTS	003	1 - 10	Reflectivity of lunar surface to solar heat (dimensionless), (r_m).
G	003	11 - 20	Solar constant in BTU/ft^2 -hr (normally 442), (G).
T1	003	21 - 30	The initial value of T in hours from 00.00 GMT at which F401 is known, (t_{001}).
F401	003	31 - 40	Cab temperature in °R at time T1 hours, (F_{401}).
DTEMP	003	41 - 50	Temperature increment in °R for the thermal conductivity tables.
TCT	004 through 043	1 - 10 11 - 20 21 - 30 31 - 40 41 - 50	Tables of thermal conductivity (BTU/ft-hr-°R) versus temperature increment (DTEMP) for various materials. Blanks substituted if no materials.
KG	044	1 - 10	"Mean" thermal conductivity of cab atmosphere in BTU/ft-hr-°R (e.g., for oxygen at 5 psia), (k_g).
CPG	044	11 - 20	"Mean" specific heat at constant pressure of cab atmosphere in BTU/lb-°R, (C_{pg}).
MUG	044	21 - 30	"Mean" viscosity of cab atmosphere in lb/ft-hr, (μ_g).
GM	44	31 - 40	Lunar gravitational acceleration at moon's surface in ft/hr^2, (g_m).
RHOG	44	41 - 50	Density of cab atmosphere in lb/ft^3, (ρ_g).
CO	45 through 76		Coordinates of point numbers in inches. Points listed in the order in which numbered.
		1 - 10	"x"
		11 - 20	"y"
		21 - 30	"z"

Variable	Card	Column	Definition of Variable
	77 through 136		All data associated with each triangle completely listed on one card per triangle as shown below.
JJ JK JL		1 - 3 4 - 6 7 - 9	Point numbers of triangle, taken in any counterclockwise order when viewed from the OUTSIDE
EIOT1		10 - 19	Mean emissivity of MOLAB outer surface at its own temperature, (e_{iot1}).
EIOTM		20 - 29	Mean absorptivity of MOLAB outer surface to lunar surface temperatures, (e_{iotm}).
EIOTS		30 - 39	Mean absorptivity of MOLAB outer surface to solar radiation, (e_{iots}).
TCN		41	Thermal conductivity number. This selects which of the five materials is relevant for this triangle.
L		42 - 51	Thickness of insulation for this triangle in inches, (L_{oio}).
	137 through 116D		Data describing heat fluxes released in MOLAB cab. Note if less than 1024 points are required to describe the heat fluxes, place the number -10.0 in columns 1-10 after the last data card and omit the remainder of the cards.
TR		1 - 10	Time at which heat is released in hours from 00.00 GMT, (t_r)
QR		11 - 20	Rate of heat release in MOLAB interior in BTU/hr, ($\dot{q}_{roj}$).
			Note at all values of the time the heat fluxes must be uniquely defined. Thus avoid TR = 110.0, QR = 0.0, and TR = 110.0, QR = 50.0 to describe a step input. Instead use TR = 110.0, QR = 0.0, and TR = 110.001, QR = 50.0.

Output Data

The following lists the output in the order in which it appears. When the output symbols or units are different from those given in the list of symbols or the input data, then a correspondence between previously used symbols and units is given.

Tabulated Inputs

NCI

PRINT INTERVAL - TP

TERMINATION TIME - TE

LOWER ERROR LIMIT - E1

UPPER ERROR LIMIT - E2

LAMBDA - λ

BETA - β

C

THETA - θ

CV

RMTS - r_m

G

T1

DTEMP

THERMAL CONDUCTIVITY TABLES

Each material is listed with a subheading. The thermal conductivities (in BTU/ft-hr-°R) are then listed from 0°R at intervals of DTEMP from left to right, row by row.

KG

CPG

MUG

GM

RHOG

F4 - F_{401}

ALPHA - α

INPUT TABLE OF CABIN HEAT RELEASES

The two columns of figures represent (as shown on the output) the time in hours from 00.00 GMT and, on the same row, the respective instantaneous heat release in BTU/hr inside the cabin.

Calculated Results

The two columns of figures (as shown on the output) give the time in hours from 00.00 GMT at which the cab interior temperature (which is printed on the same row in degrees Rankine) has been calculated. The frequency and times of printing are controlled by the input data.

FORTRAN IV PROGRAM LISTING OF MAIN PROGRAM

```
      READ (5,1)NCI,P,TP,TE,E1,E2
      N=1
      I=4
      IF(TP.LT.P) P=TP
      IF (E1.LT.E2) GO TO 4
      EE=E1
      E1=E2
      E2=EE
    4 CONTINUE
    1 FORMAT (6XI3,5F10.0)
      WRITE(6,3)     NCI,P,TP,TE,E1,E2
    3 FORMAT (                    6H  NCI=I3//20H  MAXIMUM STEP SIZE=,
     1E16.10//17H  PRINT INTERVAL=E19.10//19H  TERMINATION TIME=E17.10//
     220H  LOWER ERROR LIMIT=E16.10//20H  UPPER ERROR LIMIT=E16.10)
      CALL RUNGKT (N,I,NCI,P,TP,TE,E1,E2)
      WRITE (6,2)
    2 FORMAT (15H1**END OF JOB**)
      CALL EXIT
      STOP
      END
```

FORTRAN IV PROGRAM LISTING OF SUBROUTINE RUNGKT

```
      SUBROUTINE RUNGKT(N,I,NCI,P,TP,TE,E1,E2)
C       PREPARED BY BEN H KAVANAUGH JR
C     I=2  SECOND ORDER RUNGE-KUTTA
C     I=3  THIRD  ORDER RUNGE-KUTTA
C     I=4  FOURTH ORDER RUNGE-KUTTA
C     STORAGE  F1=E     =Z1
C              F2=YHAF1        TEMPORARY STORAGE REQUIRED=
C              F3=YFULL        DIMENSION OF F ARRAY=
C              F4=YSAVE           N*(3+I)
C              F5=DYSAVE       WHERE N=NO OF DERIVATIVES
C              F6=Z2           AND I=ORDER OF INTEGRATION
C              F7=Z3                      PROCESS
       DIMENSION Y(25),DY(25),F(175)
      CALL DERIV (Y(1), DY(1),T)
      NCII = 0
      DI = TP
      TP = T
      NK3 = 1
      NK1 = 1
      MU = 2
      H = P
      DT = P
  101 TS = T
      NK2 = 2
      M = 0
```

```
      GO TO 200
  103 M = M + 1
      GO TO (110,120,130),M
  110 DO 111 K = 1,N
      K1 = K + N + N
  111 F(K1) = Y(K)
  112 NK2 = 3
      T = TS
      IF (ABS (H/P)-.0000010 ) 115,115,118
  115 WRITE(6,116)INDEX,TT,Y(INDEX)
  116 FORMAT(1H0,///5X,I2,25HDOES NOT CONVERGE AT T = ,F14.8,25HCURRENT
     1VALUE OF Y(I) IS ,E15.8///)
      IF(NCI-NCII)901,901,117
  117 NCII = NCII + 1
      NK3 = 2
  118 DT = .5 * H
      NK1 = 2
      M = 1
      GO TO 102
  120 NK2 = 4
      DT = .5 * H
      GO TO 102
  130 DO 131 K = 1,N
      K1 = K + 2*N
      F(K) = (Y(K)-F(K1))/(2.**I-1.)
```

FORTRAN IV PROGRAM LISTING OF SUBROUTINE RUNGKT

```
      Y(K) = Y(K) + F(K)
      IF(ABS (F(K))-.00001)139,139,140
  139 F(K)= 0.
      GO TO 131
  140 F(K) = ABS (F(K)/Y(K))
  131 CONTINUE
      GO TO (142,141), NK3
  141 NK3 = 1
      GO TO 1335
  142 E = F(1)
      INDEX = 1
      IF (N-1)1335,1335,1315
 1315 DO 133 K = 2,N
      IF(E-F(K))132,133,133
  132 INDEX = K
      E = F(K)
  133 CONTINUE
 1335 IF(E-E1)134,135,135
  134 H = H + H
 1345 DT = H
      GO TO 101
  135 IF(E-E2)1345,1345,136
  136 DO 137 K = 1,N
      K1 = K + N
      K2 = K1 + N
```

```
137 F(K2) = F(K1)
    NK1 = 2
138 H = .5*H
    GO TO 112
200 GO TO (203,204),MU
203 H = AMAX1( H,H2 )
    MU = 2
204 IF( P - H )208,209,209
208 H = P
209 T2 = TP - T
    IF( ABS (T2) - .1E-08 ) 212,210,210
210 H2 = ABS (T2)
    H3=QR(T,1)
    H2=AMIN1(H2,H3)
    IF( TP - .1E-05 ) 216,211,211
211 IF(ABS (T2/TP)-.0001 ) 212,213,213
212 TAV = T
    T = TP
    GO TO 300
213 IF(H -H2) 215,215,214
214 MU = 1
    H = H2
215 DT = H
    GO TO 102
216 IF( ABS( T2 / DI ) - .0001 ) 212,213,213
```

```
300 CALL PRINT   (Y(1),DY(1),T)
    IF(ABS(TP - TE) - .5* ABS( DI ) ) 901,901,301
301 TP = TP + DI
    T = TAV
    DT = H
    GO TO 209
102 IF( DI ) 7,8,8
  7 DT = - DT
  8 DTT = .5 * DT
    J = 0
  9 J = J + 1
    GO TO ( 10,11 ), NK1
 10 CALL DERIV (Y(1), DY(1),T)
    GO TO 12
 11 NK1 = 1
 12 DO 35  K1= 1,N
    K6 = K1 + 3 * N
    K7 = K6 + N
    K2 = K7 + N
    K3 = K2 + N
    K4 = K1 + N
    GO TO ( 17,14,15,13 ), NK2
 13 F(K1) = DY(K1)
    F(K4) = Y(K1)
    GO TO 17
```

```
14 F(K6) = Y(K1)
   F(K7) = DY(K1)
   GO TO 16
15 DY(K1) = F(K7)
16 F(K4) = F(K6)
17 GOTO (1,2,3,4),J
 1 F(K1)=DY(K1) * DTT
   IF( I-2)999,5,6
 2 F(K2) = DY(K1)  * DTT
   GOTO (999,22,23,25),I
 3 F(K3) = DY(K1)  * DTT
   GOTO (999,33,33,34),I
 4 Y(K1) = F(K4) + (DY(K1) * DTT + F(K1) + 2.*(F(K2) + F(K3)))
  1*.33333333
   GO TO 35
 5 Y(K1) = F(K4) + F(K1) * 2.
   GO TO 35
 6 Y(K1) = F(K4) + F(K1)
   GO TO 35
22 Y(K1) =   F(K1) + F(K2) + F(K4)
   GO TO 35
23 Y(K1) = 4. * F(K2) - 2. * F(K1) + F(K4)
   GO TO 35
25 Y(K1) = F(K2) + F(K4)
   GO TO 35
```

FORTRAN IV PROGRAM LISTING OF SUBROUTINE RUNGKT

```
 33 Y(K1) = F(K4) + (F(K1) + F(K3) + 4. * F(K2))*.33333333
    GO TO 35
 34 Y(K1) = F(K4) + 2.* F(K3)
 35 CONTINUE
    NK2 = 1
    GO TO  (50,61,62,103),J
 50 GO TO (999,56,57,57),I
 61 GO TO (999,103,57,9),I
 62 GO TO (999,999,103,57),I
 56 T = DT + T
    GO TO 9
 57 T = T + DTT
    GO TO 9
999 CALL DUMP
901 RETURN
    END
```

FORTRAN IV PROGRAM LISTING OF SUBROUTINE PRINT

```
      SUBROUTINE PRINT (EF4,DF4,TIME )
      WRITE(6,1)TIME,EF4
    1 FORMAT(/20X,12HTIME(HRS.) =F11.4,15X,27HCAB INTERIOR TEMP.(DEG.R)
     2=F9.4)
      RETURN
      END
```

FORTRAN IV PROGRAM LISTING OF SUBROUTINE DERIV

```
      SUBROUTINE DERIV (EF4,DF4,TIME)
      REAL KG,MUG,L,LAM
      INTEGER TCN
      COMMON LAM,BETA,C,THETA,CV,RMTS,G,SIG  ,ALPHA,DT,DTEMP
      COMMON TN,TCT(40,5),T(60,61),AREA(60),TCN(60)
      DIMENSION   L(60),XNN(60)
      IF (IBM.EQ.602) GO TO 7
      IBM=602
      READ (5,1) LAM,BETA,C,THETA,CV,RMTS,G,T1,F401,DTEMP,TCT
    1 FORMAT (5F10.5)
      WRITE (6,2)LAM,BETA,C,THETA,      CV,RMTS,G, T1,     DTEMP
    2 FORMAT (8H1LAMBDA=E16.8,6H BETA=E16.8,3H C=E16.8,7H THETA=E16.8,
     1//                4H CV=E16.8,6H RMTS=E16.8,3H G=E16.8,
     2//4H T1=E16.8,7H DTEMP=E16.8,
     3 //28H THERMAL CONDUCTIVITY TABLES//)
      DO 15 IN=1,5
   15 WRITE(6,14)IN,(TCT(IZ,IN),IZ=1,40)
   14 FORMAT (//10H  MATERIALI3//(5E20.8))
      READ (5,1) KG,CPG,MUG,GM,RHOG
      ALPHA=SQRT(SQRT(KG*KG*KG*CPG*GM*RHOG*RHOG/(MUG*F401) ))
      WRITE (6,3)KG,CPG,MUG,GM,RHOG,F401,ALPHA
    3 FORMAT (///5X4H KG=E16.8,5H CPG=E16.8,5H MUG=E16.8//
     1 4H GM=E16.8,6H RHOG=E16.8,4H F4=E16.8,7H ALPHA=E16.8)
      TN=708.726
      DT=11.8121
```

FORTRAN IV PROGRAM LISTING OF SUBROUTINE DERIV

```
      NTRI=60
      TIME=T1
      NTRI=NTRI+1
    5 QT=0.
      CALL BOUND (AREA(1),XNN(1),L(1))
      I=1
      EF4=F401
    6 CONTINUE
      CALL BOUND (AREA(I),XNN(I),L(I))
      L(I)=L(I)/12.
    7 CONTINUE
      IF (TCN(I).EQ.0) GO TO 16
      EF1=F1(I,TIME)
      EL=L(I)
      EF3=F3(I,EF1,EF4,XNN(I),ETC,EL)
      ETC=TC(I,(EF1+EF3)/2.)
      QDU=ETC*(EF1-EF3)/EL
      QDN=QDU*AREA(I)
      QT=QT+QDN
   16 I=I+1
      IF(I.EQ.NTRI. OR.I.EQ.60) GO TO 8
      IF(IST  .EQ.12) GO TO 7
      GO TO 6
    8 QT=QT+QR(TIME,0)
      DF4=QT/CV
```

FORTRAN IV PROGRAM LISTING OF SUBROUTINE DERIV

```
9 FORMAT (//4H QT=E16.8,5H DF4=E16.8,6H TIME=E16.8,4H F4=E16.8)
  IST=12
  I=1
  ALPHA=SQRT(SQRT(KG*KG*KG*CPG*GM*RHOG*RHOG/(MUG*EF4) ))
  QT=0.
  RETURN
  END
```

FORTRAN IV PROGRAM LISTING OF SUBROUTINE BOUND

```
      SUBROUTINE BOUND (A,XNN,L)
      COMMON LAMD,BETAD,CD,THED,CV,RMTS,G,SIG,ALPHA,Q,DTEMP
      COMMON TN,TCT(40,5),T(60,61),AREA(60),TCN(60)
      DIMENSION FAR(61),TBET(61)
      REAL L,KBAR,LKH
      REAL LAMR,LAMD,LAMO,LAMS
      INTEGER TCN
      IF(IBM.EQ.602) GO TO 11
      IBM=602
      ITRI=0
      PI = 3.1415926536
  676 FORMAT(7F10.0     )
      DO 70 II = 1,61
   70 FAR(II)=FLOAT(II-1)/60.
  666 FORMAT(2F10.0)
      TBET( 1)=  390.
      TBET( 2)=  389.
      TBET( 3)=  387.
      TBET( 4)=383.5
      TBET( 5)=380.0
      TBET( 6)=376.0
      TBET( 7)=371.0
      TBET( 8)=361.0
      TBET( 9)=353.0
      TBET(10)=341.0
```

```
TBET(11)=330.0
TBET(12)=313.0
TBET(13)=292.0
TBET(14)=266.0
TBET(15)=227.0
TBET(16)=145.0
TBET(17)=119.0
TBET(18)=116.0
TBET(19)=112.0
TBET(20)=110.0
TBET(21)=109.0
TBET(22)=105.0
TBET(23)=103.0
TBET(24)=101.0
TBET(25)=100.0
TBET(26)= 99.0
TBET(27)= 98.0
TBET(28)= 97.0
TBET(29)= 96.0
TBET(30)= 95.0
TBET(31)= 94.0
TBET(32)= 93.0
TBET(33)= 92.0
TBET(34)= 92.0
TBET(35)= 92.0
```

```
TBET(36)= 91.0
TBET(37)= 91.0
TBET(38)= 91.0
TBET(39)= 90.0
TBET(40)= 90.0
TBET(41)= 89.0
TBET(42)= 89.0
TBET(43)= 88.0
TBET(44)= 88.0
TBET(45)= 87.0
TBET(46)= 87.0
TBET(47)=214.0
TBET(48)=259.0
TBET(49)=291.0
TBET(50)=312.0
TBET(51)=330.0
TBET(52)=342.0
TBET(53)=353.0
TBET(54)=361.0
TBET(55)=370.0
TBET(56)=377.0
TBET(57)=380.0
TBET(58)=385.0
TBET(59)=388.0
TBET(60)=390.0
```

```
      TBET(61)=390.0
      SIG=.1718E-8
      DIMENSION CO(3,32)
      READ (5,13) CO
   13 FORMAT (3F10.5)
      RETURN
   11 ITRI=ITRI+1
      READ(5,12)JJ,JK,JL,EIOT1,EIOTM,EIOTS,TCN(ITRI),L
   12 FORMAT (3I3,3F10.5,I2,F10.5)
      IF (TCN(ITRI).EQ.0) RETURN
      XX1=CO(1,JJ)
      XX2=CO(1,JK)
      XX3=CO(1,JL)
      YY1=CO(2,JJ)
      YY2=CO(2,JK)
      YY3=CO(2,JL)
      ZZ1=CO(3,JJ)
      ZZ2=CO(3,JK)
      ZZ3=CO(3,JL)
      XL3=SQRT((XX2-XX1)**2+(YY2-YY1)**2+(ZZ2-ZZ1)**2)
      XL2=SQRT((XX2-XX3)**2+(YY2-YY3)**2+(ZZ2-ZZ3)**2)
      XL1=SQRT((XX1-XX3)**2+(YY1-YY3)**2+(ZZ1-ZZ3)**2)
      RAD = PI/180.0
      LAMR = LAMD*RAD
      BETAR = BETAD*RAD
```

```
CRAD=CD*RAD
LAMO = (PI/2.0)-CRAD
 THER = THED*RAD
 XX1=XX1/12.0
 XX2=XX2/12.0
 XX3=XX3/12.0
YY1=YY1 /12.0
YY2=YY2 /12.0
YY3=YY3 /12.0
ZZ1=ZZ1 /12.0
ZZ2=ZZ2 /12.0
ZZ3=ZZ3 /12.0
XNX = (YY2-YY1)*(ZZ3-ZZ1) - (YY3-YY1)*(ZZ2-ZZ1)
XNY = (ZZ2-ZZ1)*(XX3-XX1)-(ZZ3-ZZ1)*(XX2-XX1)
XNZ= (XX2-XX1)*(YY3-YY1) - (XX3-XX1)*(YY2-YY1)
ABAR = SQRT(XNX*XNX + XNY*XNY + XNZ*XNZ)
A = 0.5*ABAR
XLN = XNX/ABAR
XMN = XNY/ABAR
XNN = XNZ/ABAR
 DO 300 J = 1,61
XJ = J-1
LAMS = LAMO - 2.0*PI*XJ/60.
DELLAM= LAMR-LAMS
XLS = -(COS(THER)*SIN(DELLAM)+SIN(BETAR)*SIN(THER)*COS(DELLAM))
```

```
      XMS = SIN(THER)*SIN(DELLAM) - SIN(BETAR)*COS(THER)*COS(DELLAM)
      XNS = COS(BETAR)*COS(DELLAM)
      COSALP = XLS*XLN + XMS*XMN + XNS*XNN
      FBAR=10.0+DELLAM/(2.0*PI)
      IFB = FBAR
      FB1 = IFB
      FBAR = FBAR - FB1
C
C         BEGIN INTERPOLATION ROUTINE HERE
C
      DO 71 KT = 1,60
      KT 1 = KT
      IF(FBAR.EQ.FAR(KT1)) GO TO 72
      KT2 = KT + 1
      IF(FBAR.GT.FAR(KT1).AND.FBAR.LT.FAR(KT2))GO TO 73
   71 CONTINUE
      WRITE(6,665)
  665 FORMAT(1H1,15X,27HINTERPOLATION NOT POSSIBLE  /1H1)
      PAUSE 7777
   72 TINT = TBET(KT1)
      GO TO 77
   73 DIFF0 = FAR(KT2)-FAR(KT1)
      DIFF1 = FBAR - FAR(KT1)
      DIFT = TBET(KT2)-TBET(KT1)
      DIFT1 = DIFT*DIFF1/DIFF0
```

```
      TINT = TBET(KT1) + DIFT1
   77 CONTINUE
C
C        END OF INTERPOLATION ROUTINE
C
      TMBAR = TINT*SQRT(SQRT(SQRT(COS(BETAR))))
      TM = 1.8*TMBAR
       EMIS=SIG*TM**4
      C1 = EIOTS*G*COSALP
      C2 = EIOTS*RMTS * G * XNS
      C3 = EIOTM*EMIS
      C4 = 1.0/(EIOT1*SIG)
      IF(XNS.GE.0.0.AND.COSALP.LT.0.0)C1 = 0.0
      IF(XNS.GT.0.0)GO TO 700
      C1 = 0.0
      C2 = 0.0
  700 CONTINUE
      TEMP = ((1.0-XNN)*(C3+C2)/2.0)+C1
      T(ITRI,J)=SQRT(SQRT(C4*TEMP))
  300 CONTINUE
      RETURN
      END
```

FORTRAN IV PROGRAM LISTING OF SUBROUTINE CAL.F3

```
      FUNCTION F3(I,F1,F4,XNN,ETC,L)
      COMMON LAM,BETA,C,THETA,CV,RMTS,G,SIG  ,ALPHA,DT,DTEMP
      COMMON TN,TCT(40,5),T(60,61),AREA(60),TCN(60)
      REAL L
      EXTERNAL TC
      PSI=ARCOS(XNN)
      IF(F1-F4) 5,1,2
    1 F3=F4
      RETURN
    2 S=-1.
      IF(PSI-1.5707963268)3,3,4
    3 CON=.25+.68*PSI*.318309886
      GO TO 18
    4 CON=.64-PSI*.0318309886
      GO TO 18
    5 S=1.
      IF(PSI-1.5707963268)6,6,7
    6 CON=.54+PSI*.0318309886
      GO TO 8
    7 CON=.93-.68*PSI*.318309886
    8 A=F1
      B=F4
      GO TO 9
   18 A=F4
      B=F1
```

FORTRAN IV PROGRAM LISTING OF SUBROUTINE CAL.F3

```
 9 F3A=(A+B)/2.
   ETC=TC(I,(F1+F3A)/2.)
   D=S*1.06*CON*L*ALPHA/ETC
   F=F1-F3A+D*(ABS(F3A-F4))**1.25
   IF(F)11,10,12
10 F3=F3A
   RETURN
11 B=F3A
   IF(ABS(A-B).GE. .1) GO TO 9
   GO TO 10
12 A=F3A
   IF(ABS(A-B).GE. .1) GO TO 9
   GO TO 10
   END
```

FORTRAN IV PROGRAM LISTING OF SUBROUTINE SUR.F1

```
      FUNCTION F1(I,TIME)
      COMMON LAM,BETA,C,THETA,CV,RMTS,G,SIG  ,ALPHA,DT,DTEMP
      COMMON TN,TCT(40,5),T(60,61),AREA(60),TCN(60)
      IF (TIME.EQ.TIME1)GO TO 1
      TIMO=AMOD (TIME,TN)
      TIJ=TIMO/DT +1.
      J=TIJ
      TIM=TIJ-FLOAT(J)
      TIME1=TIME
    1 F1=T(I,J)+TIM*(T(I,J+1)-T(I,J))
      RETURN
      END
```

FORTRAN IV PROGRAM LISTING OF SUBROUTINE COND.

```
      FUNCTION TC(I,TEMP)
      COMMON LAM,BETA,C,THETA,CV,RMTS,G,SIG  ,ALPHA,DT,DTEMP
      COMMON TN,TCT(40,5),T(60,61),AREA(60),TCN(60)
      INTEGER TCN
      TEJ=TEMP/DTEMP+1.
      J=TEJ
      TEM=TEJ-FLOAT(J)
    1 L=TCN(I)
      IF (J.GE.40) GO TO 2
      TC=TCT(J,L)+TEM*(TCT(J+1,L)-TCT(J,L))
      RETURN
    2 TC=TCT (40,L)
      RETURN
      END
```

FORTRAN IV PROGRAM LISTING OF SUBROUTINE HEAT

```
      FUNCTION QR (T1,K)
      DIMENSION T(1024),Q(1024)
      IF (IBM.EQ.602) GO TO 4
      IBM=602
      WRITE (6,8)
    8 FORMAT(1H1,50X,34HINPUT TABLE OF CABIN HEAT RELEACES//30X,
     110HTIME(HRS.),20X,20HRANDOM DQ/DT(BTU/HR)//)
      READ(5,1) TMAX
      DO 7 L=1,1024
    7 T(L)=1.E30
      T(1)=-1.E30
      DO 2 J=2,1024
      READ (5,1)T(J),Q(J)
      WRITE (6,9) T(J),Q(J)
    9 FORMAT(11X,2F30.4)
    1 FORMAT (2F10.0)
    2 IF (T(J).LT.-1.) GO TO 3
    3 T(J)=1.E30
      WRITE (6,9) T(J),Q(J)
      WRITE(6,999)
  999 FORMAT(1H1)
    4 I=0
      IF (T1.GT.T(I+512))I=I+512
      IF (T1.GT.T(I+256))I=I+256
      IF (T1.GT.T(I+128))I=I+128
```

```
      IF (T1.GT.T(I+ 64))I=I+ 64
      IF (T1.GT.T(I+ 32))I=I+ 32
      IF (T1.GT.T(I+ 16))I=I+ 16
      IF (T1.GT.T(I+  8))I=I+  8
      IF (T1.GT.T(I+  4))I=I+  4
      IF (T1.GT.T(I+  2))I=I+  2
      IF (T1.GT.T(I+  1))I=I+  1
      IF (K.NE.1) GO TO 5
      IF (K.EQ.0) GO TO 5
      TG=T(I+1)-T1
      IF (TG.LT..00001) TG=T(I+2)-T1
      QR=TG
      RETURN
    5 QR=Q(I)+(T1-T(I))*(Q(I+1)-Q(I))/(T(I+1)-T(I))
      RETURN
      END
```

FORTRAN IV PROGRAM LISTING OF SUBROUTINE ARCOS

```
      FUNCTION ARCOS (XNN)
      IF (XNN.GT.1.E-18) GO TO 1
      ARCOS=1.5707963268
      RETURN
    1 TPSI=SQRT(1./(XNN*XNN)-1.)*XNN/ABS(XNN)
      PSI=ATAN(TPSI)
      IF (PSI.LT.0.) PSI=PSI+ 3.14159265
      ARCOS=PSI
      RETURN
      END
```

CONCLUSIONS

The foregoing analysis and FORTRAN program enable assessments to be made of the effect of heat fluxes passing through the walls of arbitrarily shaped objects close to the lunar surface. The program also has the capacity to include heat releases from machinery, instruments, etc., which are contained within the envelope.

REFERENCES

1. Kreith, F., "Radiation Heat Transfer", International Textbook Co., Scranton, Pa., 1962.

2. "The American Ephemeris and Nautical Almanac", United States Government Printing Office, Washington, D. C., Published Yearly.

3. Spitz, A. and Gaynor, F., "Dictionary of Astronomy and Astronautics", Philosophical Library, Inc., New York 16, N. Y., 1959.

4. Miller, James and Miller, Robert, "AA ICE4 - Integration with Controlled Error. C1 FORTRAN II Subroutine", Westinghouse Air Arm (AA), March 7, 1961.

5. Miller, James and Miller, Robert, "AA INTL - Second, Third, and Fourth Order Runge-Kutta Integration. A FORTRAN II Subroutine", Westinghouse Air Arm (AA), March 7, 1961.

APPENDIX I

LOGICAL PROCEDURE FOR ANALYZING A MOLAB

Preliminary

The MOLAB walls are assumed to be composed of any number of different materials up to a maximum of five. The thermal conductivities of these materials (expressed in units of BTU/ft-hr-°F) are assumed to be functions of the absolute temperature and must be tabulated. The thermal conductivities must be listed in UNIFORM temperature increments, with the first value in the table being the thermal conductivity at 0°R. The temperature interval (called DTEMP) must be the same for all materials. Furthermore, the maximum temperature in the list must not exceed 975°R and there must be 40 or less points per material used. Thus, as there are five numbers per card, there is a maximum of eight cards per material (Cards 004 to 043 included).

For example, the MOLAB utilizes two different materials. Material 1 has a thermal conductivity which is a function of temperature. Material 2 has a constant thermal conductivity at 0.05 BTU/ft-hr-°F.

It is sufficiently accurate to tabulate the thermal conductivities at an interval of 100°R. Thus,

DTEMP = 100. (Utilized in Card 003).

The temperatures at which the thermal conductivities are listed are thus: 0°R, 100°R, 200°R, 300°R, etc. If the table is taken to 900°R., i.e., 10 points, then the thermal conductivities will be listed as

Card 004	$k_1(0)$	$k_1(100)$	$k_1(200)$	$k_1(300)$	$k_1(400)$
Card 005	$k_1(500)$	$k_1(600)$	$k_1(700)$	$k_1(800)$	$k_1(900)$

plus 6 blank cards

Card 012	0.05	0.05	0.05	0.05	0.05
Card 013	0.05	0.05	0.05	0.05	0.05

plus 30 blank cards (i.e., 6 blank cards for this insulation plus 3 x 8 cards for the remaining materials 3, 4 and 5 which are not used).

Mathematical Description of MOLAB Skin

Choose a right handed Cartesian coordinate system with the positive z axis vertically upward. It is usually most convenient, but not necessary, to place the x, y plane at ground level, the positive "x" axis pointing in the direction of motion, and the "z" axis coinciding with some vertical axis of symmetry, if any exists.

Decide how many points are required to describe the MOLAB surface, up to a maximum of 32 (i.e., 60 triangles), and assign a different number to each point, starting from and including one (1) and omitting no numbers.

Note that the number of triangles is determined from the number of points, p, by

$$\text{No. of Triangles, NTRI} = 2p - 4.$$

If 25 points are used to describe the body, then NTRI = 46.

List the triangles in any order, which are formed by these points, such that when viewed from the outside, the numbers run counterclockwise around the triangle. (Cards 077 to 136 inclusive.) Utilizing Figure 1,

10, 12, 11

12, 13, 11

1, 12, 10 .

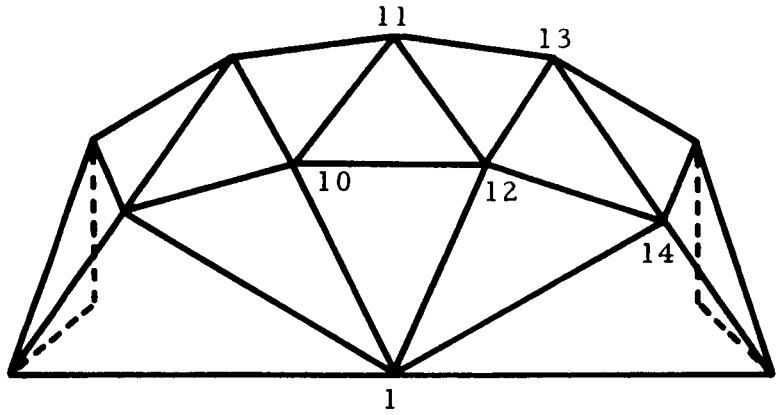

Figure 1. Illustration of MOLAB Triangle Notation

Decide upon the values of the following parameters for EACH triangle: thermal conductivity number, TCN (i.e., what material comprises the insulation); the thickness of the insulation in inches at this triangle, L; the mean emissivity of the outer surface of the triangle at its own temperature, EIOT1; the mean absorptivity of the outer surface of the triangle to lunar radiation, EIOTM; the mean absorptivity of the outer surface of the triangle to solar radiation, EIOTS.

List all the parameters associated with the triangle in the order in which they will be utilized on the cards. (Cards 077 to 136 inclusive)

	JJ	JK	JL	EIOT1	EIOTM	EIOTS	TCN	L
Card 077	10	12	11	0.1	0.5	0.6	1	0.5
Card 078	12	13	11	0.11	0.49	0.53	2	0.75

plus Cards 079 to 136 inclusive, some of which will be blank if less than 60 triangles are used.

Calculate the coordinates x, y, and z of each point in inches, and arrange a list in ascending order of point numbers. (Cards 045 to 076 inclusive.)

If the point numbers are 1, 2, 3, 4, 5...., the x, y, and z coordinates of 1 are 33, 34, 41; for 2, they are 27, 28, 30; and for 3, they are 27, 36, and 42. Then the list would be

Card 045	33	34	41
Card 046	27	28	30
Card 047	27	36	42

plus Cards 048 to 076 inclusive, some of which will be blank is less than 32 points are used.

MOLAB Cab Interior Contents

Decide upon the MOLAB interior atmosphere and calculate or obtain the following: density of the interior gas, ρ_g or RHOG lb/ft^3; mean gaseous viscosity, μ_g or MUG lb/ft-hr; mean gaseous thermal conductivity, k_g or KG BTU/ft-hr-°F; and mean gaseous specific heat, C_{pg} or CPG BTU/lb-°F. These terms partially complete Card 044.

Calculate the "water equivalent", C_v or CV BTU/°R for the contents of the cab. This must be obtained by a subsidiary calculation of the form: C_v = Mass of atmosphere × specific heat of atmosphere at constant volume + $\sum$ Mass of material × specific heat of that material (summed over all materials). This is required for Card 002.

Lunar Environment

Decide upon the selenographic latitude, $\lambda°$, and the longitude, $\beta°$, upon which the MOLAB will land (Card 002). This location will fix the values of the local reflectivity of the surface to solar heat, r_m (Card 003), and the local lunar gravitational acceleration, GM ft/hr^2 (Card 44). It is convenient at this stage to decide upon the direction, θ, which the MOLAB will be pointing when it leaves the LEM vehicle, such as $\theta = 45°$ (Northeast) (Card 002).

The date of the anticipated landing will allow the value of the colongitude of the sun for 00.00 hours GMT on that date to be referenced from "The American Ephemeris and Nautical Almanac", i.e., °C (Card 002). Furthermore, the solar constant, G, is evaluated (Card 003). The interval in hours, from 00.00 GMT of the date above, at which the MOLAB is exposed to the lunar environment, namely T1, must be decided now. At this instant the environmental temperature inside the MOLAB is also fixed, namely F401°R. (Both T1 and F401 on Card 003.)

Random Heat Releases

Decide how long after landing that the heat releases by the instruments will begin. Decide also upon the manner in which the heat is released, i.e., what form does the function of $\dot{q}_{roj}(t)$ take. Represent this function with an assembly of points. Ensure that the time of landing, TI, is added to whatever times after landing that the heat releases take place. Also ensure that each time uniquely defines a heat flux.

The MOLAB is discharged onto the lunar surface at 13.00 hr GMT. The only heat released internally occurs 17 hours later when a radio is switched on which releases energy at the rate of

$$20\ (1 - \cos \pi t/2)\ \text{BTU/hr}$$

where t is time in hours from the instant of switching on. The transmission lasts for 3 hours and is then switched off.

A graph of internal heat release against time will then appear as shown in Figure 2.

A suitable table to be accommodated in the program which would adequately represent this curve would be as follows:

Card	TR	QR
137	30.0	0.0
138	30.25	1.52
139	30.5	5.86
140	30.75	12.34
141	31.0	20.0
142	31.25	27.66
143	31.5	34.14
144	31.75	38.48
145	32.0	40.0
146	32.25	38.48

(table continued)

Card	TR	QR
147	32.5	34.14
148	32.75	27.66
149	33.0	20.0
150	33.001	0.0
151	-10.0	

Note the value -10.0 has been placed in the time listing of the last card (Card No. 151) so that the remainder (Cards 152 to 1160 inclusive) may be omitted. If the Cards 152 to 1160 were not omitted, they would be required to be blank because the above is the only heat released for the duration of the run.

Program Requirements (All contained upon Card 001)

Decide upon the length of the period on the moon that is of interest. Add to this the period after 00.00 GMT that the MOLAB lands, namely T1. This fixes the parameter TE.

The output is printed first at time T1, the start, and then in uniform increments, TP. Thus, the print increment in hours required, TP, may be ascertained.

The maximum time step size in hours which the program will attempt to make, P, depends upon the form of the $\dot{q}_{gross}$ function. In general, there is no way of knowing what value to use in order to avoid floating point traps. Previous analyses have successfully used TP = 8. However, usually the printout interval, TP, is less than the maximum time step size which can be tolerated, and the program will automatically use TP instead of P.

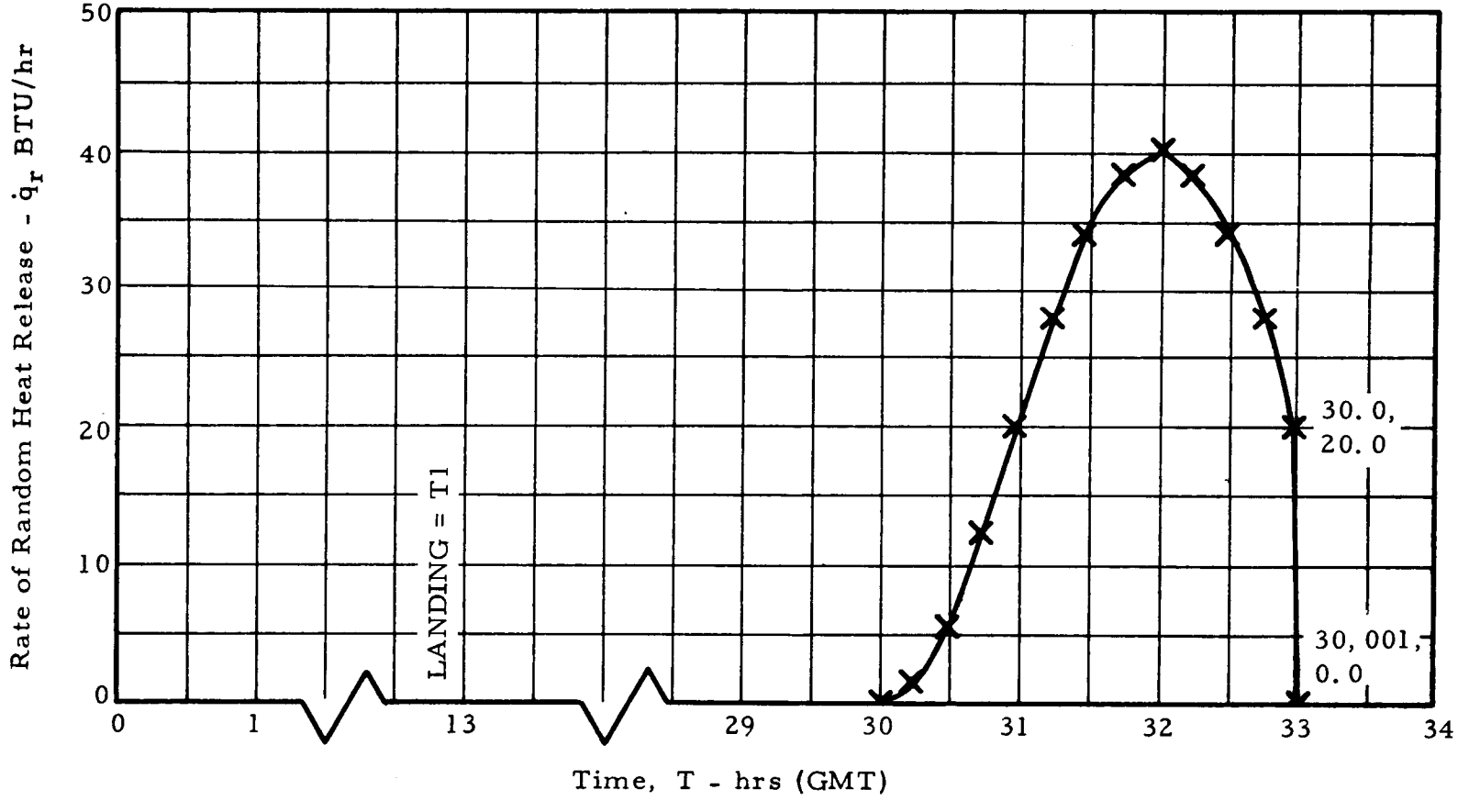

Figure 2. Representation of MOLAB Interior Heat Release

The originators of the refined Runge-Kutta method used here recommend that the dimensionless error bounds be of the order of one hundred times minimum equals maximum, i. e., maximum error bound, E2 = minimum error bound, E1 $\times$ 100. The program has been successful with E2 as large as 10^{-2}; E1 = 10^{-4}.

If the time step size cannot be reduced inside the program to such a value that the Runge-Kutta procedure will converge, then the program will use the minimum step size a number of times, irrespective of error, and attempt to evade this region. The number of times the program will attempt this, NCI, is an input parameter. NCI = 10 has not given trouble to date.

APPENDIX II

DERIVATION OF LOCAL OUTER SURFACE TEMPERATURE, F_{1ij}

Assuming a small plane area of surface, δA_1, the heat flux into the surface directly from the sun is

$$G \cos \varepsilon \ \delta A_1 \qquad \begin{array}{l} 0 \leqq n_s \leqq 1 \\ 0 \leqq \cos \varepsilon \leqq 1 \end{array}$$

where G is the solar constant; $\cos \varepsilon$ is the cosine of the angle between the normal to the plane area, δA_1, and the direction of the sun's rays; and n_s is the direction cosine between the normal to the moon's surface and the direction of the sun's rays. Thus, the amount of this energy absorbed is

$$e_{1ots} \ G \cos \varepsilon \ \delta A_1 \qquad \begin{array}{l} 0 \leqq n_s \leqq 1 \\ 0 \leqq \cos \varepsilon \leqq 1 \end{array}$$

where e_{1ots} is the absorptivity of the outer surface to solar radiation.

The energy transmitted from the moon to the elementary area is

$$E_m A_m F_{m1}$$

where E_m is the emissive power of the moon; A_m is the area of the moon; and F_{m1} is the shape factor from the moon to surface (1). However,

$$A_m F_{m1} = \delta A_1 F_{1m} \quad .$$

Hence, the heat flux from the moon to surface (1) is

$$E_m \delta A_1 F_{1m}$$

and heat absorbed is

$$E_m \delta A_1 F_{1m} e_{1otm}$$

where e_{1otm} is the absorptivity of the body at lunar surface temperatures. The reflected sun light from the sun to the moon to MOLAB is

$$G\, n_s\, r_m\, A_m\, F_{m1} = G\, n_s\, r_m\, \delta A_1\, F_{1m} \qquad \text{with } 0 \leqq n_s \leqq 1$$

where r_m is the reflectivity of the lunar surface to the solar heat. Hence, the amount absorbed by the surface is

$$e_{1ots}\, r_m\, G\, n_s\, \delta A_1\, F_{1m} \qquad \text{with } 0 \leqq n_s \leqq 1 \quad .$$

Having neglected re-reflections, the above three terms are the only sources of energy.

This inward heat flux is equal to the sum of the heat radiated away by the body surface, plus the amount of heat conducted away from the back of the surface. However, the amount conducted away from the surface is quite small compared with the other heat fluxes and can conveniently be neglected. Hence we have

$$e_{1otm}\, E_m\, F_{1m}\, \delta A_1 + (e_{1ots}\, r_m\, G\, n_s\, F_{1m}\, \delta A_1)_{ii}$$

$$+ (e_{1ots}\, G \cos \varepsilon\, \delta A_1)_i = e_{1ot1}\, \sigma\, F_{1ij}^4\, \delta A_1$$

where F_{1ij} is the surface temperature of δA_1, σ is the Stefan-Boltzmann constant and e_{1ot1} is the emissivity of surface (1) at temperature F_{1ij}. When $n_s \geqq 0$ and $\cos \varepsilon < 0$, neglect $(\quad)_i$, and when $n_s < 0$, neglect $(\quad)_{ii}$ and $(\quad)_i$.

$$F_{1m}\, [e_{1otm}\, E_m + (e_{1ots}\, r_m\, G\, n_s)_{ii}] + (e_{1ots}\, G \cos \varepsilon)_i = e_{1ot1}\, \sigma\, F_{1ij}^4$$

$$F_{1ij} = \left\{ \frac{F_{1m}\, [e_{1otm}\, E_m + (e_{1ots}\, r_m\, G\, n_s)_{ii}] + (e_{1ots}\, G \cos \varepsilon)_i}{e_{1ot1}\, \sigma} \right\}^{\frac{1}{4}} \quad . \qquad (10)$$

where group (i) is neglected if $n_s \geqq 0$ and $\cos \varepsilon < 0$, (i.e., when the sun shines on MOLAB, but not directly on the plane, δA_1) and groups (i) and (ii) are neglected if $n_s < 0$, (i.e., when the sun does not shine on the MOLAB).

Evaluation of Parameters in Equation 10

A number of the parameters in Equation 10 require determination. These are F_{1m}, n_s, $\cos \varepsilon$ and E_m.

Shape Factor, F_{1m}

As described earlier, the moon has been assumed to be an infinite flat plane within the view of the MOLAB, or in particular, within the view of the small area, δA_1. The shape factor for this configuration[1] is

$$F_{1m} = \frac{1}{2} (1 - n_n)$$

where n_n is the cosine of the angle between the outward normal from δA_1 and the normal from the lunar surface. To determine the direction of the outward normal from δA_1 requires coordinating the plane more specifically. Regardless of how complicated the MOLAB shape is, it will be relatively easy to pick out a number of points on the surface. However, the only geometrical shapes which can be bounded by these points without complicated compatibility conditions are triangles; consequently, triangles were chosen.

To ensure that the three points in space which define a triangle are treated consistently, it was decided to number them such that when the triangle is viewed from OUTSIDE the MOLAB, the numbers 1, 2, and 3 run COUNTERCLOCKWISE as shown in Figure 3. Any one of them may be chosen as 1 provided that the above condition is maintained.

Hence if $\overline{r}_{12}$ is a vector from 1 to 2 and $\overline{r}_{13}$ is a vector from 1 to 3, then a unit normal perpendicular to 1, 2, and 3 is

$$\frac{\overline{r}_{12} \times \overline{r}_{13}}{|\overline{r}_{12} \times \overline{r}_{13}|} .$$

This unit vector, when the points are expressed in MOLAB centered Cartesian coordinates such that the z axis is perpendicular to the lunar surface, has direction cosines:

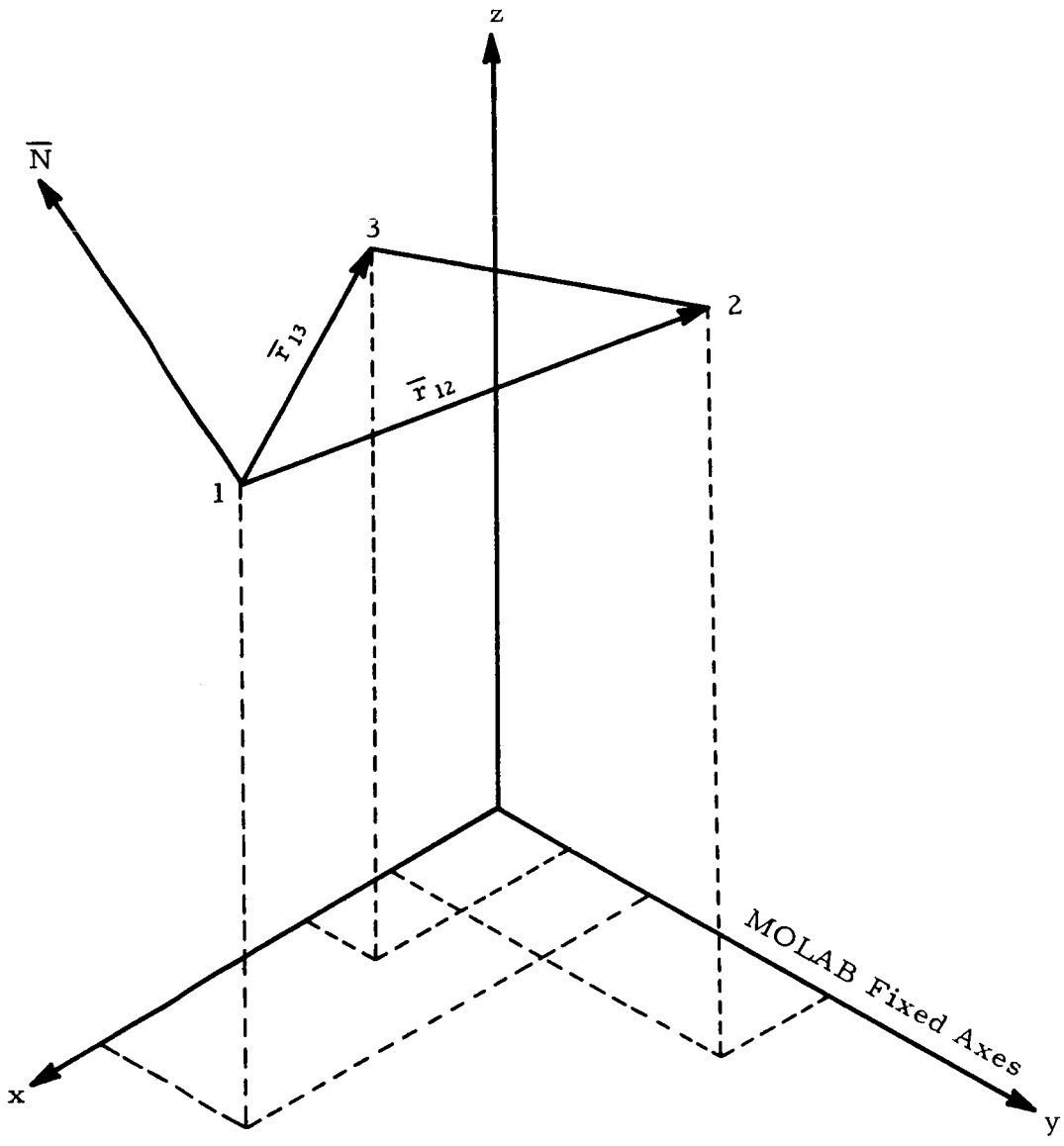

Figure 3. Derivation of MOLAB Triangle Outward Normal

In x direction, $\ell_n = \frac{N_x}{\overline{A}}$

In y direction, $m_n = \frac{N_y}{\overline{A}}$

In z direction, $n_n = \frac{N_z}{\overline{A}}$

where

$$N_x = (y_2 - y_1)(z_3 - z_1) - (z_2 - z_1)(y_3 - y_1)$$

$$N_y = (z_2 - z_1)(x_3 - x_1) - (x_2 - x_1)(z_3 - z_1)$$

$$N_z = (x_2 - x_1)(y_3 - y_1) - (y_2 - y_1)(x_3 - x_1), \text{ and}$$

$$\overline{A} = (N_x^2 + N_y^2 + N_z^2)^{\frac{1}{2}} .$$

Note here that the area of the triangle, A, is determined by

$$A = \frac{\overline{A}}{2} .$$

Thus as the axes have been chosen such that the "z" axis is perpendicular to the lunar surface, then n_n is the direction cosine required for the shape factor in Equation 1.

Normal Solar Direction Cosine, n_s

The normal solar direction cosine, or cosine of the zenith angle, is clearly a function of time depending as it does upon the motion of the moon around the sun and also upon the latitude and longitude of the MOLAB. The rotation of the moon around the sun is not uniform but if a period is based on a mean synodic month, then the maximum deviation from this is less than 2%[3]. Another deviation in the moon's motion is that the equatorial plane is tilted from the ecliptic with an inclination of up to about 1.75°. However, for most purposes it is sufficiently accurate to assume that the

sun rotates uniformly in the moon's equatorial plane with a period of τ (one lunar day) and with a direction from lunar east to lunar west. Consequently, the longitude of the sun on the moon, λ_s, at any time is

$$\lambda_s = \lambda_o - 360\, t/\tau$$

where λ_o is the longitude of the sun when time, $t = 0$. To determine the constant, λ_o, it is convenient to refer to the "Ephemeris"[2]. The "Ephemeris" for any year tabulates the colongitude, C, of the moon at 00.00 hrs (GMT) for each day of that year. The colongitude is the longitude of the morning terminator, and hence the longitude of the sun, λ_o, at time $t = 0$ for that day is

$$\lambda_o = 90 - C \quad .$$

It is convenient to erect a local coordinate system at the point on the moon at which the MOLAB is oriented. This is done, as shown in Figure 4, by taking the z_2 axis at longitude, λ, and latitude, β, in the direction of the local zenith, the x_2 axis east and the y_2 axis north. With these coordinates, the direction cosines of the sun (at longitude λ_s) are

$$x_2 \text{ axis} \qquad \ell_2 = -\sin \Delta\lambda \tag{11}$$

$$y_2 \text{ axis} \qquad m_2 = -\sin \beta \cos \Delta\lambda \tag{12}$$

$$z_2 \text{ axis} \qquad n_2 = \cos \beta \cos \Delta\lambda \tag{13}$$

where

$$\Delta\lambda = \lambda - \lambda_s \quad .$$

However, as the x and y MOLAB fixed axes may not coincide with those fixed on the lunar surface (the z axis will still coincide), it is necessary to introduce an angle, θ, which determines the rotation of the MOLAB x axis from the lunar surface x_2 axis, as shown in Figure 5. Thus transforming the direction cosines of the unit sun vector in Equations 11, 12, and 13 yields

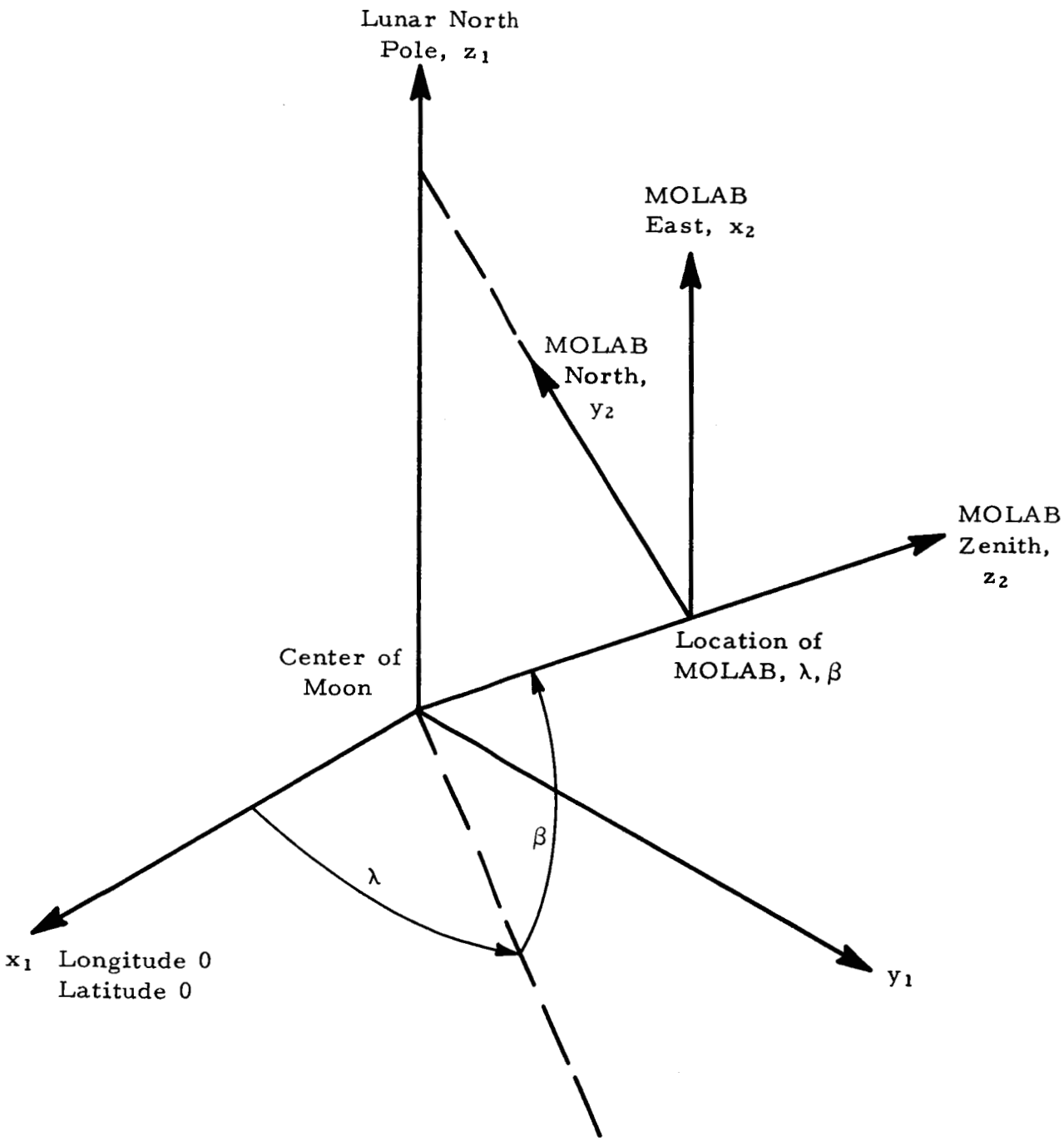

Figure 4. Orientation of Local Lunar Surface Coordinates

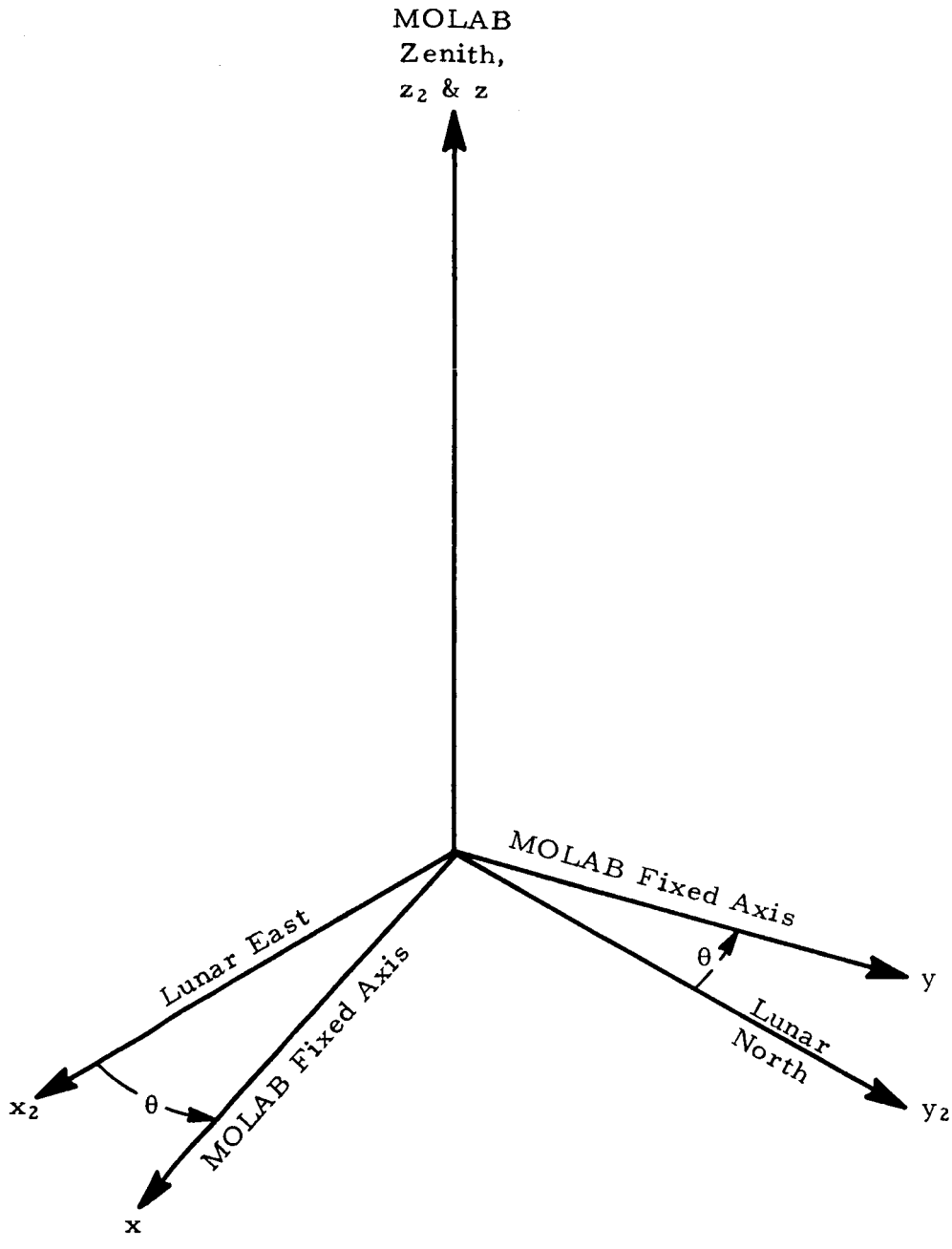

Figure 5. Transformation from Local Lunar Surface Coordinates to MOLAB Fixed Coordinates

x axis $\quad \ell_s = -(\cos\theta \sin\Delta\lambda + \sin\beta \sin\theta \cos\Delta\lambda)$

y axis $\quad m_s = \sin\theta \sin\Delta\lambda - \sin\beta \cos\theta \cos\Delta\lambda$

z axis $\quad n_s = \cos\beta \cos\Delta\lambda$.

Note that, as any excursion the MOLAB will make on the lunar surface will be small compared with the circumference of the moon, λ and β are effectively constant. Consequently, to represent any motion of the MOLAB, it is only necessary to represent the angular displacement, θ, as a function of time.

Cosine of Angle Between Sun and Plane Normal, $\cos\varepsilon$

As unit vectors describing the direction of both the sun and the normal of δA_1 are available in MOLAB fixed coordinates, then $\cos\varepsilon$ is easily determined by the scalar product of the two unit vectors, thus

$$\cos\varepsilon = \ell_s \ell_n + m_s m_n + n_s n_n \quad .$$

Emissive Power of the Moon, E_m

To determine the emissive power of the moon, a curve was used which plots lunar equatorial temperature against time. The local time in degrees, counting from local lunar moon, at the longitude, λ, in question is determined by the instantaneous longitude of the sun, with respect to λ, namely $\Delta\lambda$. This term, $\Delta\lambda$, frequently has to be converted to a phase fraction as many time bases are expressed as such. The conversions are of the form, phase fraction,

$$f = \frac{\Delta\lambda}{360} \quad \text{or} \quad \frac{\Delta\lambda}{2\pi} \quad .$$

Thus, from the phase fraction, the instantaneous lunar equatorial temperature is determined. To determine the temperature at any other

latitude, β, the one sixth power of cos β gives the temperature variation with sufficient accuracy for all latitudes up to 45°. Thus, the temperature at latitude is

$$T_{\overline{m}} = T_{\beta=0} \cos^{1/6} \beta \quad .$$

As most lunar temperatures are in degrees Kelvin, $T_{\overline{m}}$ is converted to degrees Rankine by

$$T_m = 1.8 \times T_{\overline{m}} \quad .$$

However, because the moon effectively radiates as a black body at its own temperature, the emissive power of the moon may be calculated as

$$\text{Emissive Power, } E_m = \sigma \times T_m^{\,4} \quad .$$

Substitution of the above terms in Equation 1 enables it to be solved for the MOLAB adiabatic surface temperature, F_{1ij}, namely

$$F_{1ij} = \left\{ \frac{(1 - n_n)\,[e_{1ot1}\, E_m + (e_{1ots}\, r_m\, G\, n_s)_{ii}] + (2\, e_{1ots}\, G \cos \varepsilon)_i}{2\, e_{1ot1}\, \sigma} \right\}^{\frac{1}{4}} .$$