N66-15367

NASA CR-54738

A COMPUTER PROGRAM FOR ELECTRON OR ION GUN ANALYSIS:

OPERATIONS MANUAL

by

V. Hamza

M. L. Report No. 1369

September 1965

Microwave Laboratory

W. W. HANSEN LABORATORIES OF PHYSICS

STANFORD UNIVERSITY · STANFORD, CALIFORNIA

Interim Report

Prepared for

NATIONAL AERONAUTICS AND SPACE ADMINISTRATION

Contract NAS 3-4100

NOTICE

This report was prepared as an account of Government sponsored work. Neither the United States, nor the National Aeronautics and Space Administration (NASA), nor any person acting on behalf of NASA:

A.) Makes any warranty or representation, expressed or implied, with respect to the accuracy, completeness, or usefulness of the information contained in this report, or that the use of any information, apparatus, method, or process disclosed in this report may not infringe privately owned rights; or

B.) Assumes any liabilities with respect to the use of, or for damages resulting from the use of any information, apparatus, method or process disclosed in this report.

As used above, "person acting on behalf of NASA" includes any employee or contractor of NASA, or employee of such contractor, to the extent that such employee or contractor of NASA, or employee of such contractor prepares, disseminates, or provides access to, any information pursuant to his employment or contract with NASA, or his employment with such contractor.

Requests for copies of this report should be referred to

National Aeronautics and Space Administration
Office of Scientific and Technical Information
Attention: AFSS-A
Washington, D. C. 20546

NASA CR-54738

A COMPUTER PROGRAM FOR ELECTRON OR ION GUN ANALYSIS: OPERATIONS MANUAL

by

V. Hamza

M. L. Report No. 1369
September 1965

Interim Report
Prepared for
NATIONAL AERONAUTICS AND SPACE ADMINISTRATION
Contract NAS 3-4100

Microwave Laboratory
W. W. Hansen Laboratories of Physics
Stanford University
Stanford, California

TABLE OF CONTENTS

Page

I. Introduction 1

II. Computer program for beam analysis 3

A. Data input 5

B. Fortran coding form 13

C. Data output. 13

III. Computer program for spectral radius calculation - XR - calculation. 46

A. Data input 46

B. Data output. 47

Appendices

A. Flow chart and Fortran II. Statements for beam analysis 52

B. Flow chart and Fortran II. Statements for XR-calculation 80

C. Detailed flow charts 89

References 102

I. INTRODUCTION

This report describes a computer program, shown at the end of the report, which is used to analyze the space-charge flow in an electron or ion gun. It determines the nature of the beam profiles for practically any specified two-dimensional or axially symmetric gun electrode system. The basic process that is followed is to initially assume that the space-charge density is zero, solve LaPlace's equation by finite-difference methods, and find the potential variation in the region of interest shown in Fig. 1. With a knowledge of this potential variation, the motion of charged particles from the emitter source is determined, and the current density emitted is found by the Child-Langmuir law in the neighborhood of the emitter. The whole process is then repeated through several iterative cycles (solving Poisson's equation instead of LaPlace's equation), until the final solution converges to a self-consistent solution. The use of the program will be illustrated by an example of an ion propulsion gun design.

It is beyond the scope of this report to explain the mathematical method used; the reader is referred to the references for this.

The computer program has been written in the IBM 7090 Fortran II programming language, which requires at least a 32,000 word core for execution.

Subroutines of the computer program will be now listed with a brief explanation of their function.

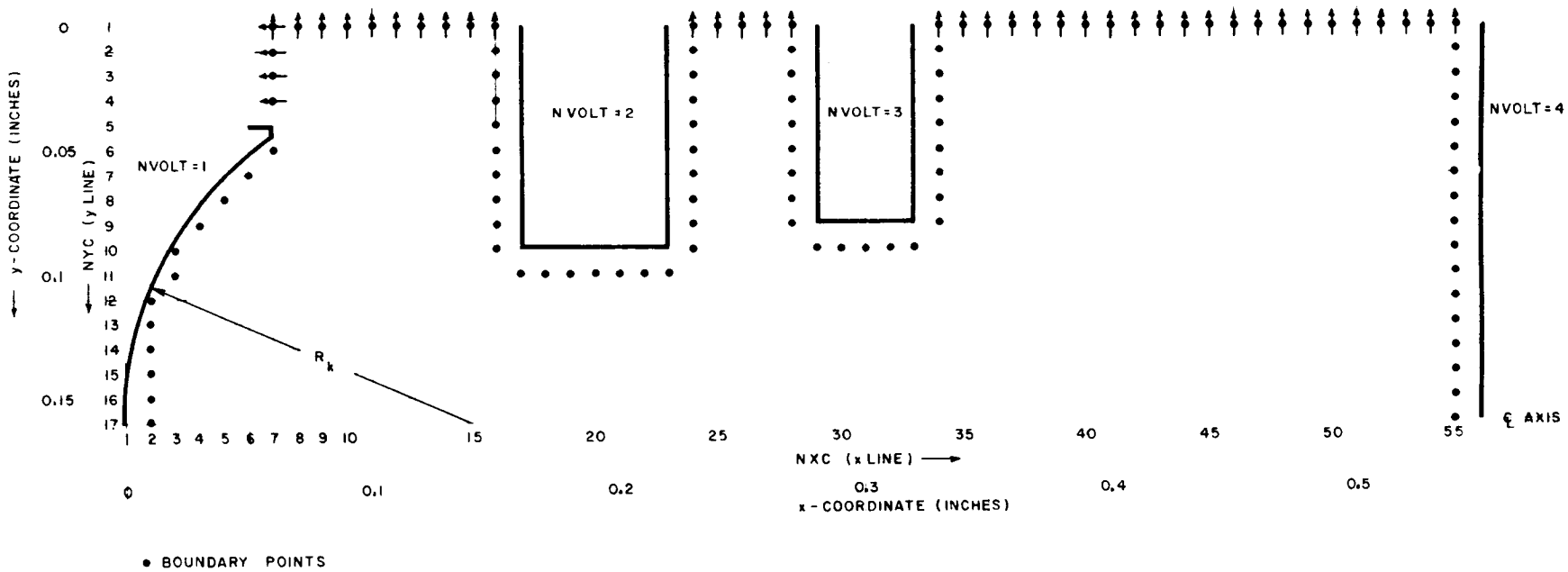

FIG. 1--Layout of electrode system for beam analysis.

II. COMPUTER PROGRAM FOR BEAM ANALYSIS

It is to be emphasized that all Fortran statements referring to plotting may have to be changed in accordance with the particular installations where the program is being used. The statements herein refer specifically to the plotting routines at the Stanford Computation Center, and may not be accurate elsewhere.

Subroutines Required:

1. MAIN ØNE*

Starts the program, brings in all the data input, calculates the matrix coefficients, plots the electrode boundary points and calls UCAL for LaPlace's solution and then MNTRI.

2. ARC

Calculates the emitter length, determines the width of the current tubes (ARCL) and establishes the beginning trajectory coordinates (ETX, ETY). ARC is called by MNTRI.

3. CALR

Calculates the right hand side (RHS) of the matrix equation (space-charge density). CALR is called by MNTRI.

4. CØRRCT

Checks on trajectories intercepted by the electrode system. CØRRCT is called by TRCU.

5. EQLINE

Calculates the equipotential line coordinates throughout the region of interest, starting with the potential VAT, and continues by increment of SIZE until the potential of VBT is reached for each cycle if KCY(J) > 0 , (where J represents cycle number), otherwise, no calculation (if SIZE = 0 no equipotential line coordinates calculation). EQLINE is called by UCAL.

---

*Ø Represents OU to distinguish from O as zero.

6. MATRIX

Solves the matrix equation for each line, e.g., matrix equation

$$A\underline{w} = \underline{k}$$

$$\underline{w} = A^{-1}k \quad .$$

MATRIX is called by UCAL.

7. MNTRI

Governs the whole solution once the initial (LaPlace's) potential distribution is known. MNTRI is called by MAIN.

8. PEQ

Calculates the equipotential line coordinates through a given point NPØT (NPØTX, NPØTY) for current density calculation. PEQ is called by MNTRI.

9. TRAJ

Calculates the trajectory coordinates through the region of interest once the trajectories were initialized. TRAJ is called by TRCU.

10. TRCU

Initializes trajectories and calculates current density distribution along the emitter. TRCU is called by MNTRI.

11. TRØUT

Prints out the RHS distribution through the region of interest for each cycle if IXØ > 0 and KCY(J) > 0 . Otherwise, no print-out. TRØUT is called by MNTRI.

12. TWØUT

Prints out the potential distribution through the region of interest for each cycle, if KCY(J) > 0 . The final solution is printed automatically. TWØUT is called by UCAL.

13. UCAL

Solves for potential distribution inside the region of interest. UCAL is called by MAIN for LaPlace's solution, then by MNTRI for the space-charge-flow solution.

14. 7090 PLØTTING RØUTINES (Fortran II) for the CalComp Plotter (Stanford University Computation Center Library Program No. 157).

A. DATA INPUT

It is recommended that a scaled graph of the configuration to be analyzed be drawn as shown in Fig. 1. Attention is given to two different sets of coordinates, e.g., x-y line coordinate and x,y coordinate in inches (dimension in inches is not essential).

The first data card is the number of heading cards (NH) which will follow (e.g., identification of run by serial number, date, description, etc.). It is particularly useful to differentiate repeated machine deck executions of the program.

The second data card is as follows:

NXF	total number of x-lines
NYF	total number of y-lines
NEM	number of x,y coordinates specifying emitter surface (a minimum of two are required, namely, the end points).

NTJ	number of trajectories
NDIM	two-dimensional geometry ≤ 2, axially symmetric geometry > 2
NRL	number of cycles (e.g., NRL = 2; LaPlace's solution is considered as zeroth cycle, then 2 cycles plus last cycle; altogether 4 cycles); must be greater than 0
NUL	number of iterations for LaPlace's solution
NURL	number of iterations for Poisson's solution (after last cycle NURL used as a switch to terminate the problem)
NCØØR	positive, emitter coordinates are beginning trajectory coordinates; negative or zero, beginning trajectory coordinates are calculated
IDEC	negative, emitter is concave (for flat emitter use IDEC < 0 with XEMIT $\rightarrow \infty$); zero and positive, emitter is convex
NFUL	0 for the case of axial symmetry or for the case of two-dimensional geometry when symmetry about the axis is used to eliminate the lower half plane from the computation; 1 for the case of two-dimensional geometry when the full problem is considered in the calculation.
NCØ	number of lines in x-direction for which noncalculated points (outside the region of interest, e.g., electrode) will be set to a potential of the emitter (VA); in most cases this can be taken to be the number of x-mesh lines up to the face of the first electrode beyond the emitter
KRHX	x-line coordinate of the test point for RHS
KRHY	y-line coordinate of the test point for RHS

The third data card is as follows:

IXØ	positive, RHS prints out-condition to KCY > 0; negative or zero, RHS will not print out
NSPAN	number of x-lines to traverse to obtain equipotential line for current density calculation; this is used for conserving time

in the scan for the equipotential used in the calculation used in the calculation of emitter current density

NPØTX, NPØTY — x- and y-line coordinate of a point whose potential will be used for determining the coordinates of the equipotential line for current density calculation.

YAXS — y-coordinate of the axis of symmetry

The fourth data card shows:

KRTN — number of test points (test point determines whether its potential is lower than the emitter potential; if so, the calculation procedes; if not, EXIT is called

KRTX, KRTY — x- and y-line coordinate of a test point.

The fifth data card gives this information:

VAT — upper potential in equipotential calculation (see definition of subroutine EQLINE)

VBT — lower potential in equipotential calculation

SIZE — step size in equipotential calculation

VA — emitter potential

VB — highest negative potential, otherwise zero

VC — y-distance in inches for y-positioning of the output plot [VC = 10.0 (maximum width of the graph paper is 10") moves the pen to point (0.0, 10.0) and makes that the reference point].

The sixth data card is:

HGH — the largest y-coordinate (in inches) of the second electrode chosen for checking on trajectories for possible interception

XLØW — the largest y-coordinate (in inches) of the first electrode chosen for checking on trajectories for possible interception (e.g., in example given, only the second accelerator electrode was chosen to check on trajectories)

HSL — not used

XLSL — slope of a line to which normal derivative should be zero, (see sketch below)

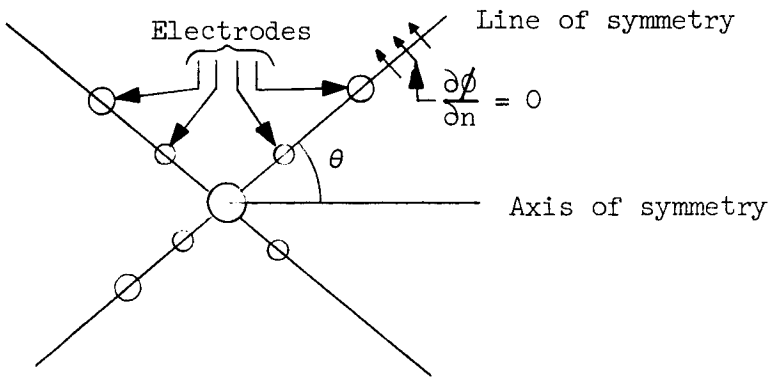

Note: the first calculated point of each line should be taken directly above or on the line of symmetry and must be identified by ND(3) > 0 in addition to NS = 1

VD — scaling factor for plotting purposes; H times VD gives actual inches on plot.

The seventh data card gives:

AXX — the x-coordinate in inches where subroutine CØRRCT starts to check on XLØW for possible trajectory interception

BXX — the x-coordinate in inches where subroutine CØRRCT stops to check on XLØW and starts to check on HGH for possible trajectory interception

CXX	the x-coordinate in inches where subroutine CØRRCT stops to check on HGH for possible trajectory interception
DXX	a constant – not used
XR	the spectral radius of the matrix (the largest eigenvalue) obtained by a separate program using essentially the same data input (see Spectral Radius Calculation).

The eighth data card consists of:

RØ	the distance in inches from the axis (for axially geometry only) when the axis is not part of the region of interest. See sketch below

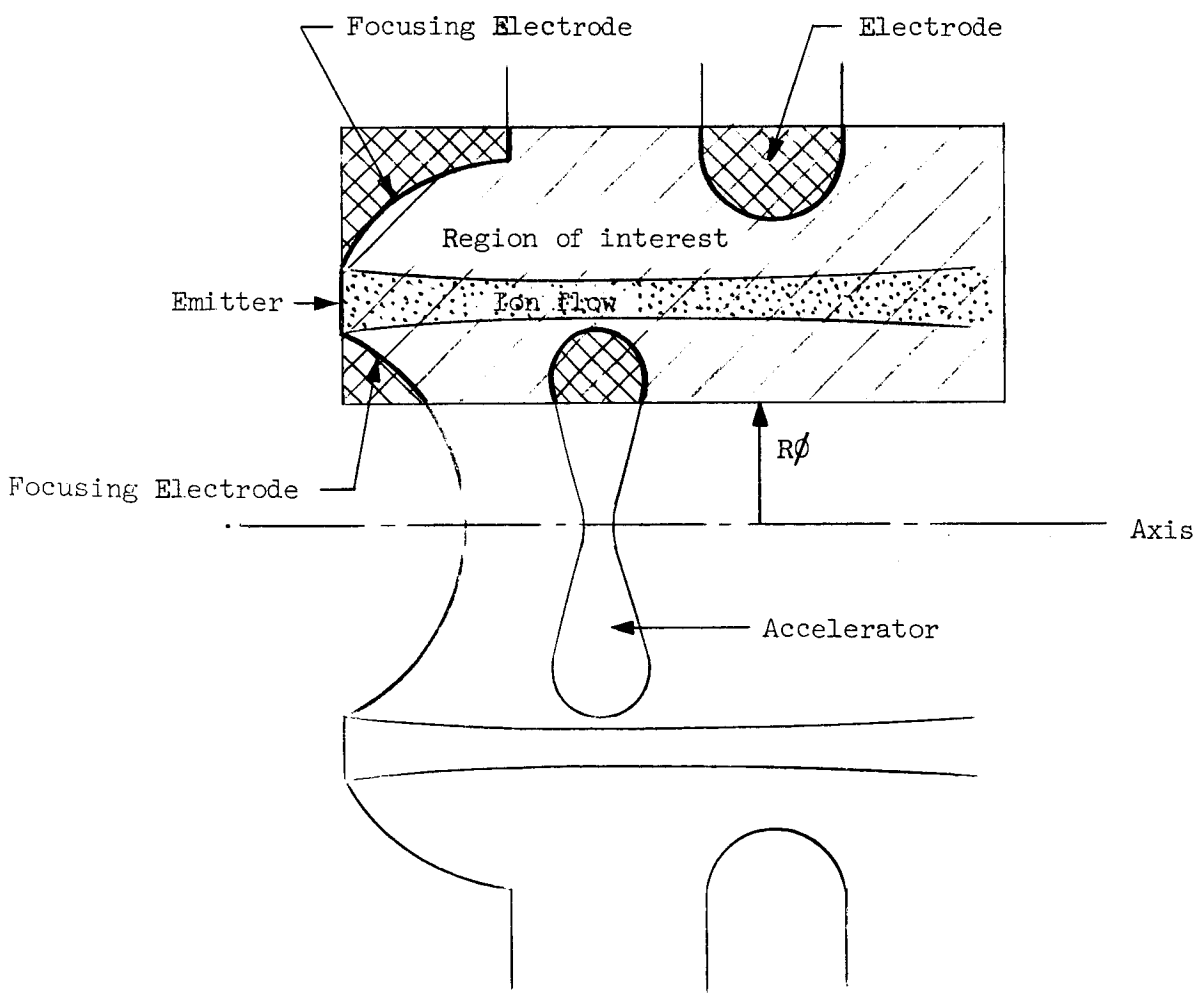

EPS	convergence test for matrix equation. (Data output prints EPSILØN)
XEMIT	x-coordinate in inches of the emitter radius (XEMIT is equal to the emitter radius only if the emitter x-coordinate passes through zero) and must be a very large number for a flat emitter.
H	mesh size in inches. (Data output prints MESH SIZE-H)

The ninth data card shows:

YEP	permittivity of free space (Data output prints EPSNØT)
XQM	specific charge-to-mass ratio for proton (or electron)
ATØM	atomic weight number of ion flow (for electron flow, ATØM = 1.0)
VTH	transverse thermal velocity of emission
VTHX, VTHY	not used.

The tenth data card is as follows:

ATX, ATY	x- and y-corrdinates (in inches) of the emitter shape (three (x,y) coordinates per card). Total number of x,y coordinates must equal NEM, and they must follow in order of increasing y-coordinate.

The eleventh data card gives:

KCY	positive, all print-outs occur (condition to IXØ > 0 and SIZE > 0) ; negative or zero, no print-outs. Note: Last cycle (final solution) is automatically printed out.

The twelfth data card consists of electrode voltage register (7 voltages per card, 4 cards needed). Twenty-eight voltages available, labeled from NVØLT (or NVØLT1) = 1 to NVØLT (or NVØLT1) = 28.

The thirteenth data card consists of the boundary points of an electrode system. The calculation is broken up into a series of lines consisting of simply connected interim points. There may be more than one of these lines for each x-line. The boundary points are specified by proceeding from the top to the bottom and left to right, one boundary point per card.

NS = 1 the first and uppermost calculated point inside the region of interest for each set of simply connected interim points

= 2 the last and lowermost calculated point inside the region of interest for each simply connected set of interior points. In case the axis of symmetry constitutes the boundary of the electrode system as shown in Fig. 1, the whole card specifying the last calculated point for that x-line is not necessary for any point

= 0 inside the region of interest containing any information about the boundary of the electrode system (excluding the two cases above for which NS = 1 and 2).

ND(1), ND(2) specify the zero normal derivative of the potential of that point according to the direction as shown:

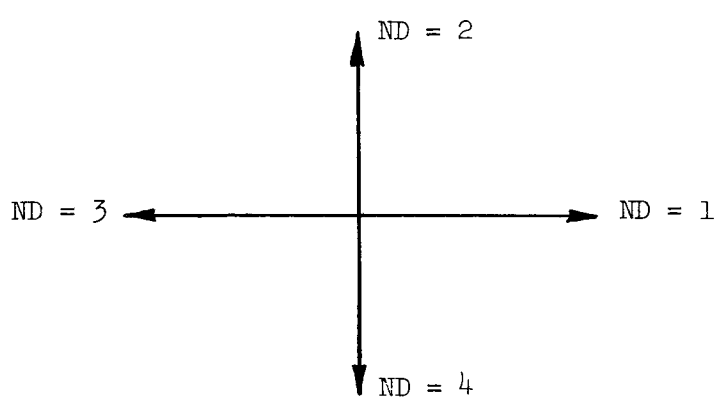

There is a possibility that two normal derivatives may be zero at one point but not more. It is also possible to set one derivative equal to zero and specify a potential on the same boundary card.

ND(3) > 0 indicates that the boundary point faces two different potentials, as shown below:

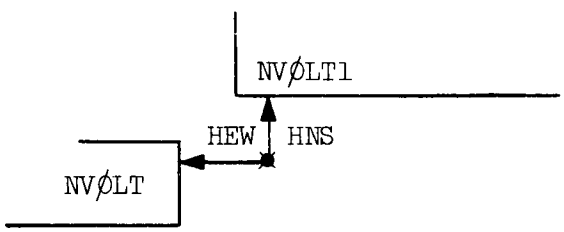

or that the normal derivative is zero to some prescribed line given by the slope of XLSL $\neq 0$, otherwise zero

NXC x-line coordinate of the boundary point

NYC y-line coordinate of the boundary point

HEW represents the distance left or right from the boundary point to the solid boundary (electrode) <u>in percent of mesh size</u> (maximum = 1.0 ≡ one whole mesh). The distance to the right (<u>E</u>ast) is positive, whereas the distance to the left (<u>W</u>est) is negative)

HNS same as HEW for up and down boundary. The distance up (<u>N</u>orth) is positive, whereas the distance down (<u>S</u>outh) is negative

NVØLT is the index number of the voltage register specifying the voltage of the boundary point to the left or right

NVØLT1 same as NVØLT for the boundary point up or down with ND(3) > 0 . Note: In the case (NVØLT = NVØLT1) or when the boundary point (up or down) is the only boundary potential, it is not necessary to specify NVØLT1 with ND(3) > 0 . In this case, it is sufficient to specify NVØLT only.

NCHECK = 1 for the last boundary point. (This is important because check is made on the last data card if NCHECK = 1 in case of no, the EXIT is called). For this card one must put NXC = NXF and NYC = NYF even if this requires a dummy card.

B. FORTRAN CODING FORM

The format of the Data Input Deck is shown on the next three pages.

C. DATA OUTPUT

The output consists of a plot shown in Fig. 2. The trajectories and electrode boundaries are given to scale.

The Data Output print-out starts on page 23. The first three pages consist of Data Input for the record. Every "read in" data card is automatically printed-out with identification. Page 26 shows the information on zeroth cycle — No space-charge-LaPlace solution. Iteration No. = 45, indicating that 45 iterations were completed for calculating the potential distribution, with point 731 (or x-line = 43, y-line = 17)

EXAMPLE SHOWN ON FIGURE 1

Program: ION THRUSTOR ANALYSIS

Programmer: V. HAMZA Date: 9/31/65

Punching Instructions: Graphic / Punch / Card Form # *

Page 1 of 3

Identification (73–80)

C FOR COMMENT

STATEMENT NUMBER | Cont. | FORTRAN STATEMENT (1–72)

```
      NH
      2
1         DEFLECTING PLATES FØR IØN ENGINE NØ.1
          NASA-LEWIS FØR F. KAVANAGH/S. JØNES                    08/02/65
  NXF  NYF  NEM  NTJ  NDIM  NRL  NUL  NURL NCØØR IDEC NFUL  NCØ KRHX KRHY
   55   17    8   10    3    2   45   45    0   -1    0   14    2   17
  IXØ NSPAN NPØTX NPØTY
    1   13    5   17
  KRTN KRTX KRTY
    1    2   17
    VAT       VBT       SIZE       VA        VB        VC
  2000.      500.      500.      2100.       0.        8.
    HGH       XLØW      HSL       XLSL      VD
    0.        0.08      0.        0.        20.
    AXX       BXX       CXX       DXX       XR
    0.28      0.32      0.54      0.54      0.9804
      RØ          EPSILØN          XEMIT      MESH SIZE -H
    0.            0.01             0.14          0.01
            EPSNØT      XQM       ATØM      VTH       VTHX      VTHY
            8.854E-12 9.579E+07 1.329E+02
```

* A standard card form, IBM electro 888157, is available for punching source statements from this form.

IBM

FORTRAN CODING FORM

Program: ION THRUSTOR ANALYSIS	Punching Instructions		Page 2 of 3
Programmer: Y. HAMZA	Date: 7/31/65	Graphic / Punch	Card Form # * / Identification (73–80)

C FOR COMMENT

STATEMENT NUMBER (1–5)	Cont. (6)	FORTRAN STATEMENT (7–72)
		CATHØDE CØØRDINATES
ATX		ATY ATX ATY ATX ATY
0.06		0.044 0.05 0.052 0.04 0.062
0.025		0.08 0.014 0.10 0.006 0.12
0.002		0.14 0.0 0.16
		PRINT-OUT OF CYCLE NØ.
KCY(1)		KCY(2) KCY(3) KCY(4) ...
0		0
		ELECTRØDE VØLTAGE
NVØLT-1		NVØLT-2 NVØLT-3 NVØLT-4 NVØLT-5 NVØLT-6 NVØLT-7
2100.		0. 0. 500. 2000. 1800. 1600.
1400.		1200. 1000. 800. 600. 400. 200.
100.		50. 0. 0. 0. 0. 0.
0.		0. 0. 0. 0. 0. 0.
		BØUNDARY PØINTS ØF ELECTRØDE SHAPE
NS NO. ≤ 3		NXC NYC HEW HNS NVØLT NVØLT1 CHECK
1		2 12 -100 200 1
		2 13 -400 1
		2 14 -650 1
		2 15 -800 1
		2 16 -950 1

* A standard card form, IBM electro 888157, is available for punching source statements from this form.

IBM

FORTRAN CODING FORM

Program: ION THRUSTOR ANALYSIS	Punching Instructions		Page 3 of 3
Programmer: V. HAMZA	Date: 7/31/65	Graphic / Punch	Card Form # * / Identification (73–80)

C FOR COMMENT

STATEMENT NUMBER (1–5)	Cont. (6)	FORTRAN STATEMENT (7–72)
2		2 17-1. 1
1		3 10 -150 300 1
		3 11 -700 1
		⋮ ⋮
2		55 17 1. 4 1
		THIS IS THE LAST DATA CARD
		NOTE: THE ALPHANUMERICAL DATA CARDS SHOWN HERE ARE FOR IDENTIFICATION ONLY. THEY WILL NOT APPEAR IN THE DATA DECK. THE ASSEMBLED DATA DECK CONTAINS NUMERICAL DATA ONLY WITH THE EXCEPTION OF THE FIRST CARDS IDENTIFYING THE PROBLEM AS NOTED ABOVE. HOWEVER, THE DATA OUTPUT WILL HAVE THESE ALPHANUMERICAL DATA PRINTED AUTOMATICALLY.

* A standard card form, IBM electro 888157, is available for punching source statements from this form.

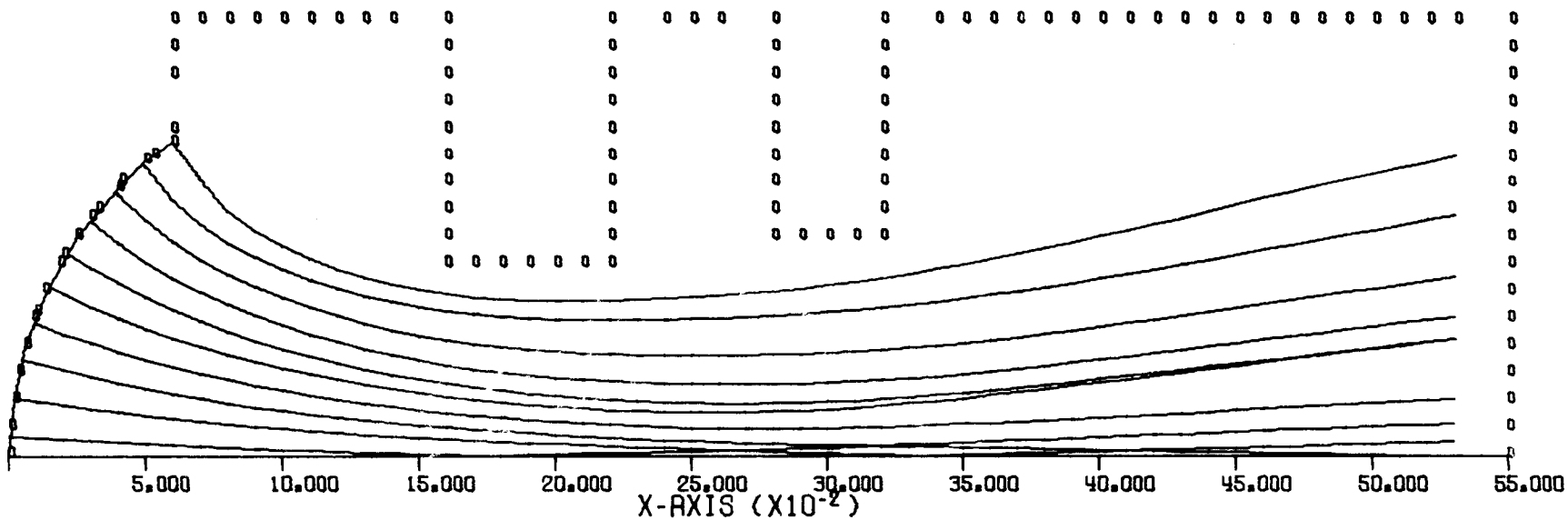

FIG. 2--Plot of the final solution.

displaying the largest error of $\underline{\epsilon} = 25.78$. [Note:

$$\underline{\epsilon} \triangleq \frac{2(\Delta U_{max})}{\dfrac{1}{\left(\dfrac{NXF}{2}\right)^2} + \dfrac{1}{\left(\dfrac{NYF}{2}\right)^2}}$$

where

$$\Delta U_{max} = \max_{1 \leq i \leq N} (U^{m+1} - U^m)$$

and $m + 1$ is the last iteration number ($N \equiv$ total No. of points). It is not, therefore, the difference in the potential of the last two iterations.] EPSILØN = 0.01 is the given error in the Data Input to compare with $\underline{\epsilon}$. The total length of the emitter circular arc in inches is ARC = 0.13524 . DELTA ARC LENGTH = 0.01424 is the arc increment of each current tube (or the spacing between two adjacent trajectories). The X,Y - EMITTER prints-out coordinates of the emitter given in the Data Input, and X,Y-BEGIN TRAJ. gives the calculated beginning trajectory coordinates. (Note: No. 1 is always the first pair of coordinates given in Data Input (X,Y-EMITTER discussed above), likewise the last one located along the axis.

The expression X,Y-EQUIPØTENTIAL represents the (x,y) coordinates in inches of the equipotential line through the given point NPØT(NPØTX, NPØTY) specified by the Data Input, for the current density calculation.

The intercepts of two normals to the emitter on the equipotential line for the current density calculation of the seventh current tube (number shown in the last column) are X1, Y1 and X2, Y2. The normals are drawn from the points of the seventh and the eighth beginning trajectory coordinates. The arithmetic mean distance between the emitter surface and the equipotential line used in the Child-Langmuir formula for calculating the current density of the seventh current tube is represented by DX.

The current density in amp/in^2 (or amp/unit area in the case of different dimensions used for unit length) is CD. The last-but-one column displaying − 1 indicates that the first x-line closest to the emitter for the seventh or for both the seventh and the eighth trajectories is less than one half of the mesh width away, thus the trajectories have not yet been initialized. (Here 0 indicates that the trajectories have been initialized and from that point on the coordinates of the trajectories are calculated from the potential distribution. This point will be more apparent when the last cycle is discussed where the x-coordinates are also shown.) The order of current tubes printed, given by the last column, is given in order of machine calculation.

EMITTER CURRENT IN TUBES shows the total current in amps., (in two-dimensional cases amp/in of emitter length out of paper) for each tube. TØTAL EMITTER CURRENT ≈ 0.0023 amps (for two-dimensional cases amp/in of emitter length out of paper).

Page 27 gives similar information on CYCLE No. 1. The only difference from the previous page is RHTEST = 0.01825 and UTEST = 2034.5567. Here RHTEST is the value of the RHS (right hand side of the matrix equation, containing information on space-charge density) at the point KRH(KRHX,KRHY)

specified in the Data Input, and UTEST is the value of the potential at the point KRH. The information on the emitter coordinates and the beginning trajectory coordinates shown for the previous cycle are not given because they are identical. The rest of the page contains information discussed in the previous cycle. Page 28 shows similar information for CYCLE No. 2. Page 29 starts the information for the final solution. The print-out of the previous cycles is given primarily for checking purposes. Namely, RTEST must increase from cycle to cycle and must approach an asymptotic value if the number of cycles has been allowed to increase indefinitely (in other words, the difference between two following cycles must be decreasing). Likewise, the indicated ERROR must be decreasing from cycle to cycle.

Next, the information on pages 29-31 is the U-FIELD of LAST CYCLE ≡ (discrete potential value for each point through the region of interest given in Fig. 1). The first column indicates the x-line number, the next 8 columns represent the y-line number, thus defining every point in the region of interest. Columns 10 to 17 correspond to the respective potential values for each point given by x-line, y-line (e.g., the potential of the point given by x-line = 8 and y-line = 6 is 1759.447 volts.) The X,Y CØØRDINATES ØF EQUIPØTENTIAL LINES shown on pages 31-32 are the (x,y) coordinates in inches for a given equipotential, starting with the potential specified by the Data Input VAT = 2000.0 and continued by an increment given by SIZE = 500.0 until final potential given by VBT = 500.0 is reached. The order of print-out of the coordinates is in order of machine calculation.

The next information given on page 32 is the coordinates of the equipotential line for the current density (X,Y-EQUIPØTENTIAL) calculation. Then the current density for the current tubes (7, 8, 9, and 10) are printed; this could be calculated at the station shown by X = 0.01 (for the rest of the beginning trajectory, x-coordinates are greater than X = 0.01 and thus they could not yet be initialized). Then for each x-line (e.g., X = 0.01) the y-coordinate of the initilized trajectories No. 9 and No. 10 are given. (Notice 0 above the statement X = 0.01 in the last-but- one column for the current density calculation for the current tube 9 and 10 and -1 for the tube 7 and 8; indicating that trajectories 7 and 8 will be initialized again on the next x-line because the distance from the emitter to the x-line was less than one half of a mesh size.)

The columns VX and VY correspond to the x- and y-velocities of the ions. Pages 33 to 42 show the rest of the (x,y) coordinates of the trajectories and their respective x- and y-velocities. The right hand side (RHS) of the matrix equation is shown on pages 42 to 45 for each point. This print-out occurs because of the IXØ > 0 specification given in Data Input. From this RHS distribution, the current density profile in the beam can be obtained for any desired x-line location. For axially symmetric geometries we have

$$\mathrm{RHS} = rh^2 \frac{J}{VX} \quad .$$

Thus, knowing RHS, r, h, and VX it is easy to calculate J . Similarly, for two-dimensional geometries we have

$$\mathrm{RHS} = h^2 \frac{J}{VX} \quad .$$

The last information on page 45 contains the total current distribution in each current tube at the emitter and finally the total emitter current.

DATA OUTPUT PRINT-OUT BY THE COMPUTER

```
        DEFLECTING PLATES FOR ION ENGINE NO.1                          08/02/65
        NASA-LEWIS  FOR  F.KAVANAGH/S.JONES

 NXF  NYF  NEM  NTJ NDIM  NRL  NUL NURLNCOOR IDEC NFVL   NCO KRHX KRHY
  55   17    8   10    3    2   45   45    0   -1  0      14    2   17

 IXONSPANNPOTXNPOTY YAXS
   1   13    5   17  0.0

KRTN KRTX KRTY KRTX KRTY KRTX KRTY
   1    2   17
   VAT        VBT       SIZE        VA         VB         VC
2000.0000  500.0000  500.0000 2100.0000   -0.        8.0000
   HGH       XLOW       HSL        XLSL       VD
  -0.        0.0800    -0.        -0.       20.0000
   AXX       BXX        CXX        DXX        XR
   0.2800    0.3200     0.5400     0.5400     0.9804
      RO          EPSILON          XEMIT       MESH SIZE - H
    0.             0.01000000      0.13999999     0.01000000
           EPSNOT       XQM       ATOM       VTH        VTHX       VTHY
         .88540E-11.95790E 08.13290E 03.          .          .

          CATHODE  COORDINATES
   0.0600    0.0440     0.0500     0.0520     0.0400     0.0620
   0.0250    0.0800     0.0140     0.1000     0.0060     0.1200
   0.0020    0.1400    -0.         0.1600

          PRINT-OUT OF CYCLE NO.
  -0   -0   -0   -0   -0   -0   -0   -0   -0   -0

 VOLT-1        -2         -3         -4         -5         -6         -7
2100.0000     0.         0.       500.0000 2000.0000 1800.0000 1600.0000
1400.0000 1200.0000 1000.0000  800.0000  600.0000  400.0000  200.0000
 100.0000   50.0000    -0.        -0.        -0.        -0.        -0.
  -0.       -0.        -0.        -0.        -0.        -0.        -0.

     BOUNDARY POINTS OF ELECTRODE SHAPE
1000   2  12-0.100 0.200     1   -0  -0
0000   2  13-0.400-0.        1   -0  -0
0000   2  14-0.650-0.        1   -0  -0
0000   2  15-0.800-0.        1   -0  -0
0000   2  16-0.950-0.        1   -0  -0
2000   2  17-1.000-0.        1   -0  -0
1000   3  10-0.150 0.300     1   -0  -0
0000   3  11-0.700-0.        1   -0  -0
1000   4   9-0.500 0.700     1   -0  -0
1000   5   8-0.750 0.800     1   -0  -0
1000   6   7-0.900 0.800     1   -0  -0
1230   7   1-0.    -0.       1   -0  -0
0300   7   2-0.    -0.       1   -0  -0
0300   7   3-0.    -0.       1   -0  -0
2300   7   4-0.    -1.000    1   -0  -0
1000   7   6-0.700 0.500     1   -0  -0
1200   8   1-0.    -0.       1   -0  -0
1200   9   1-0.    -0.       1   -0  -0
1200  10   1-0.    -0.       7   -0  -0
1200  11   1-0.    -0.       9   -0  -0
1200  12   1-0.    -0.      11   -0  -0
1200  13   1-0.    -0.      13   -0  -0
```

1200	14	1-0.	-0.	2	-0	-0
1200	15	1-0.	-0.	2	-0	-0
1200	16	1 1.000-0.		2	-0	-0
0000	16	2 1.000-0.		2	-0	-0
0000	16	3 1.000-0.		2	-0	-0
0000	16	4 1.000-0.		2	-0	-0
0000	16	5 1.000-0.		2	-0	-0
0000	16	6 1.000-0.		2	-0	-0
0000	16	7 1.000-0.		2	-0	-0
0000	16	8 1.000-0.		2	-0	-0
0000	16	9 1.000-0.		2	-0	-0
0000	16	10 1.000-0.		2	-0	-0
1000	17	11-0.	1.000	2	-0	-0
1000	18	11-0.	1.000	2	-0	-0
1000	19	11-0.	1.000	2	-0	-0
1000	20	11-0.	1.000	2	-0	-0
1000	21	11-0.	1.000	2	-0	-0
1000	22	11-0.	1.000	2	-0	-0
1000	23	11-0.	1.000	2	-0	-0
1200	24	1-1.000-0.		2	-0	-0
0000	24	2-1.000-0.		2	-0	-0
0000	24	3-1.000-0.		2	-0	-0
0000	24	4-1.000-0.		2	-0	-0
0000	24	5-1.000-0.		2	-0	-0
0000	24	6-1.000-0.		2	-0	-0
0000	24	7-1.000-0.		2	-0	-0
0000	24	8-1.000-0.		2	-0	-0
0000	24	9-1.000-0.		2	-0	-0
0000	24	10-1.000-0.		2	-0	-0
1200	25	1-0.	-0.	2	-0	-0
1200	26	1-0.	-0.	2	-0	-0
1200	27	1-0.	-0.	3	-0	-0
1200	28	1 1.000-0.		3	-0	-0
0000	28	2 1.000-0.		3	-0	-0
0000	28	3 1.000-0.		3	-0	-0
0000	28	4 1.000-0.		3	-0	-0
0000	28	5 1.000-0.		3	-0	-0
0000	28	6 1.000-0.		3	-0	-0
0000	28	7 1.000-0.		3	-0	-0
0000	28	8 1.000-0.		3	-0	-0
0000	28	9 1.000-0.		3	-0	-0
1000	29	10-0.	1.000	3	-0	-0
1000	30	10-0.	1.000	3	-0	-0
1000	31	10-0.	1.000	3	-0	-0
1000	32	10-0.	1.000	3	-0	-0
1000	33	10-0.	1.000	3	-0	-0
1200	34	1-1.000-0.		3	-0	-0
0000	34	2-1.000-0.		3	-0	-0
0000	34	3-1.000-0.		3	-0	-0
0000	34	4-1.000-0.		3	-0	-0
0000	34	5-1.000-0.		3	-0	-0
0000	34	6-1.000-0.		3	-0	-0
0000	34	7-1.000-0.		3	-0	-0
0000	34	8-1.000-0.		3	-0	-0
0000	34	9-1.000-0.		3	-0	-0
1200	35	1-0.	-0.	3	-0	-0
1200	36	1-0.	-0.	3	-0	-0
1200	37	1-0.	-0.	3	-0	-0
1200	38	1-0.	-0.	3	-0	-0

```
1200  39   1-0.    -0.        3    -0   -0
1200  40   1-0.    -0.        3    -0   -0
1200  41   1-0.    -0.        3    -0   -0
1200  42   1-0.    -0.        3    -0   -0
1200  43   1-0.    -0.        3    -0   -0
1200  44   1-0.    -0.        3    -0   -0
1200  45   1-0.    -0.        3    -0   -0
1200  46   1-0.    -0.        3    -0   -0
1200  47   1-0.    -0.        3    -0   -0
1200  48   1-0.    -0.        3    -0   -0
1200  49   1-0.    -0.        3    -0   -0
1200  50   1-0.    -0.        3    -0   -0
1200  51   1-0.    -0.        3    -0   -0
1200  52   1-0.    -0.        3    -0   -0
1200  53   1-0.    -0.        3    -0   -0
1200  54   1-0.    -0.        3    -0   -0
1200  55   1 1.000-0.        4    -0   -0
0000  55   2 1.000-0.        4    -0   -0
0000  55   3 1.000-0.        4    -0   -0
0000  55   4 1.000-0.        4    -0   -0
0000  55   5 1.000-0.        4    -0   -0
0000  55   6 1.000-0.        4    -0   -0
0000  55   7 1.000-0.        4    -0   -0
0000  55   8 1.000-0.        4    -0   -0
0000  55   9 1.000-0.        4    -0   -0
0000  55  10 1.000-0.        4    -0   -0
0000  55  11 1.000-0.        4    -0   -0
0000  55  12 1.000-0.        4    -0   -0
0000  55  13 1.000-0.        4    -0   -0
0000  55  14 1.000-0.        4    -0   -0
0000  55  15 1.000-0.        4    -0   -0
0000  55  16 1.000-0.        4    -0   -0
2000  55  17 1.000-0.        4    -0    1
                    THIS ENDS DATA CARDS
```

```
NO SPACE-CHARGE - LAPLACE SOLUTION

ITERATION NO./POINT/ERROR/EPSILON 45  731      25.775817       0.010000

ARC,DELTA ARC LENGTH    0.13524   0.01424

X,Y-EMITTER
 1 (0.060,0.044)   2 (0.050,0.052)   3 (0.040,0.062)   4 (0.025,0.080)   5 (0.014,0.100)   6 (0.006,0.120)   7 (0.002,0.140)
 8 (0.    ,0.160)

X,Y-BEGIN TRAJ.
 1 (0.060,0.044)   2 (0.049,0.053)   3 (0.039,0.063)   4 (0.030,0.074)   5 (0.022,0.086)   6 (0.015,0.098)   7 (0.009,0.111)
 8 (0.005,0.125)   9 (0.002,0.139)  10 (0.001,0.153)  11 (0.    ,0.160)

X,Y-EQUIPOTENTIAL
 1 (0.054,0.    )   2 (0.054,0.010)   3 (0.055,0.020)   4 (0.056,0.030)   5 (0.067,0.040)   6 (0.067,0.050)   7 (0.063,0.060)
 8 (0.060,0.070)   9 (0.055,0.080)  10 (0.052,0.090)  11 (0.049,0.100)  12 (0.046,0.110)  13 (0.044,0.120)  14 (0.042,0.130)
15 (0.041,0.140)  16 (0.040,0.150)  17 (0.040,0.160)  18 (0.    ,0.    )
X1=.431E-01 X2=.416E-01 Y1=.124E-00 Y2=.134E-00 DX=.368E-01 CD=0.1302E-01   -1    7
X1=.416E-01 X2=.406E-01 Y1=.134E-00 Y2=.145E-00 DX=.382E-01 CD=0.1183E-01   -1    8
X1=.406E-01 X2=.401E-01 Y1=.145E-00 Y2=.155E-00 DX=.391E-01 CD=0.1120E-01    0    9
X1=.401E-01 X2=.400E-01 Y1=.155E-00 Y2=.160E-00 DX=.397E-01 CD=0.1076E-01    0   10
X1=.452E-01 X2=.431E-01 Y1=.113E-00 Y2=.124E-00 DX=.347E-01 CD=0.1494E-01    0    6
X1=.431E-01 X2=.416E-01 Y1=.124E-00 Y2=.134E-00 DX=.368E-01 CD=0.1302E-01    0    7
X1=.416E-01 X2=.406E-01 Y1=.134E-00 Y2=.145E-00 DX=.382E-01 CD=0.1183E-01    0    8
X1=.480E-01 X2=.452E-01 Y1=.102E-00 Y2=.113E-00 DX=.323E-01 CD=0.1783E-01    0    5
X1=.557E-01 X2=.515E-01 Y1=.792E-01 Y2=.910E-01 DX=.253E-01 CD=0.3179E-01   -1    3
X1=.515E-01 X2=.480E-01 Y1=.910E-01 Y2=.102E-00 DX=.291E-01 CD=0.2275E-01    0    4
X1=.608E-01 X2=.557E-01 Y1=.669E-01 Y2=.792E-01 DX=.207E-01 CD=0.5022E-01   -1    2
X1=.557E-01 X2=.515E-01 Y1=.792E-01 Y2=.910E-01 DX=.253E-01 CD=0.3179E-01    0    3
X1=.608E-01 X2=.557E-01 Y1=.669E-01 Y2=.792E-01 DX=.207E-01 CD=0.5022E-01    0    2
X1=.659E-01 X2=.608E-01 Y1=.526E-01 Y2=.669E-01 DX=.143E-01 CD=0.1134E-00    0    1

EMITTER CURRENT IN TUBES
 1  0.113116E-02  2  0.457765E-03  3  0.259828E-03  4  0.162916E-03  5  0.108455E-03  6  0.737875E-04  7  0.488289E-04
 8  0.298514E-04  9  0.141851E-04 10  0.169591E-05
TOTAL EMITTER CURRENT      0.228848E-02
```

```
 C Y C L E  NO.  1

 RHTEST=   0.01825      UTEST=   2034.5567

ITERATION NO./POINT/ERROR/EPSILON 45  731      22.747585       0.010000

X,Y-EQUIPOTENTIAL
 1 (0.052,0.    )   2 (0.052,0.010)   3 (0.052,0.020)   4 (0.054,0.030)   5 (0.064,0.040)   6 (0.063,0.050)   7 (0.060,0.060)
 8 (0.057,0.070)   9 (0.054,0.080)  10 (0.051,0.090)  11 (0.048,0.100)  12 (0.046,0.110)  13 (0.044,0.120)  14 (0.042,0.130)
15 (0.041,0.140)  16 (0.040,0.150)  17 (0.040,0.160)  18 (0.    ,0.    )
X1=.430E-01 X2=.416E-01 Y1=.124E-00 Y2=.134E-00 DX=.368E-01 CD=0.4733E-02   -1    7
X1=.416E-01 X2=.407E-01 Y1=.134E-00 Y2=.145E-00 DX=.383E-01 CD=0.4277E-02   -1    8
X1=.407E-01 X2=.402E-01 Y1=.145E-00 Y2=.155E-00 DX=.392E-01 CD=0.4051E-02    0    9
X1=.402E-01 X2=.400E-01 Y1=.155E-00 Y2=.160E-00 DX=.397E-01 CD=0.3907E-02    0   10
X1=.450E-01 X2=.430E-01 Y1=.113E-00 Y2=.124E-00 DX=.346E-01 CD=0.5485E-02    0    6
X1=.430E-01 X2=.416E-01 Y1=.124E-00 Y2=.134E-00 DX=.368E-01 CD=0.4733E-02    0    7
X1=.416E-01 X2=.407E-01 Y1=.134E-00 Y2=.145E-00 DX=.383E-01 CD=0.4277E-02    0    8
X1=.477E-01 X2=.450E-01 Y1=.102E-00 Y2=.113E-00 DX=.320E-01 CD=0.6640E-02    0    5
X1=.545E-01 X2=.510E-01 Y1=.780E-01 Y2=.905E-01 DX=.240E-01 CD=0.1295E-01   -1    3
X1=.510E-01 X2=.477E-01 Y1=.905E-01 Y2=.102E-00 DX=.286E-01 CD=0.8671E-02    0    4
X1=.585E-01 X2=.545E-01 Y1=.642E-01 Y2=.780E-01 DX=.180E-01 CD=0.2476E-01   -1    2
X1=.545E-01 X2=.510E-01 Y1=.780E-01 Y2=.905E-01 DX=.240E-01 CD=0.1295E-01    0    3
X1=.585E-01 X2=.545E-01 Y1=.642E-01 Y2=.780E-01 DX=.180E-01 CD=0.2476E-01    0    2
X1=.630E-01 X2=.585E-01 Y1=.484E-01 Y2=.642E-01 DX=.998E-02 CD=0.8928E-01    0    1

EMITTER CURRENT IN TUBES
 1  0.890361E-03  2  0.225737E-03  3  0.105797E-03  4  0.621004E-04  5  0.403966E-04  6  0.270904E-04  7  0.177497E-04
 8  0.107913E-04  9  0.512949E-05 10  0.615666E-06
TOTAL EMITTER CURRENT      0.138577E-02
```

```
 C Y C L E  NO.  2

 RHTEST=   0.02004      UTEST=   2075.0600

ITERATION NO./POINT/ERROR/EPSILON 45  731       2.723069       0.010000

X,Y-EQUIPOTENTIAL
 1 (0.052,0.    )   2 (0.052,0.010)   3 (0.052,0.020)   4 (0.054,0.030)   5 (0.064,0.040)   6 (0.063,0.050)   7 (0.060,0.060)
 8 (0.058,0.070)   9 (0.055,0.080)  10 (0.052,0.090)  11 (0.049,0.100)  12 (0.046,0.110)  13 (0.044,0.120)  14 (0.042,0.130)
15 (0.041,0.140)  16 (0.040,0.150)  17 (0.040,0.160)  18 (0.    ,0.    )
X1=.433E-01 X2=.418E-01 Y1=.124E-00 Y2=.134E-00 DX=.370E-01 CD=0.4542E-02   -1    7
X1=.418E-01 X2=.408E-01 Y1=.134E-00 Y2=.145E-00 DX=.384E-01 CD=0.4138E-02   -1    8
X1=.408E-01 X2=.402E-01 Y1=.145E-00 Y2=.155E-00 DX=.392E-01 CD=0.3936E-02    0    9
X1=.402E-01 X2=.400E-01 Y1=.155E-00 Y2=.160E-00 DX=.398E-01 CD=0.3802E-02    0   10
X1=.455E-01 X2=.433E-01 Y1=.113E-00 Y2=.124E-00 DX=.350E-01 CD=0.5190E-02    0    6
X1=.433E-01 X2=.418E-01 Y1=.124E-00 Y2=.134E-00 DX=.370E-01 CD=0.4542E-02    0    7
X1=.418E-01 X2=.408E-01 Y1=.134E-00 Y2=.145E-00 DX=.384E-01 CD=0.4138E-02    0    8
X1=.484E-01 X2=.455E-01 Y1=.102E-00 Y2=.113E-00 DX=.327E-01 CD=0.6139E-02    0    5
X1=.556E-01 X2=.518E-01 Y1=.791E-01 Y2=.912E-01 DX=.253E-01 CD=0.1119E-01   -1    3
X1=.518E-01 X2=.484E-01 Y1=.912E-01 Y2=.102E-00 DX=.295E-01 CD=0.7804E-02    0    4
X1=.593E-01 X2=.556E-01 Y1=.652E-01 Y2=.791E-01 DX=.194E-01 CD=0.2046E-01   -1    2
X1=.556E-01 X2=.518E-01 Y1=.791E-01 Y2=.912E-01 DX=.253E-01 CD=0.1119E-01    0    3
X1=.593E-01 X2=.556E-01 Y1=.652E-01 Y2=.791E-01 DX=.194E-01 CD=0.2046E-01    0    2
X1=.631E-01 X2=.593E-01 Y1=.485E-01 Y2=.652E-01 DX=.107E-01 CD=0.7465E-01    0    1

EMITTER CURRENT IN TUBES
 1  0.744461E-03  2  0.186523E-03  3  0.914853E-04  4  0.558937E-04  5  0.373450E-04  6  0.256318E-04  7  0.173614E-04
 8  0.104400E-04  9  0.498402E-05 10  0.599153E-06
TOTAL EMITTER CURRENT      0.117439E-02
```

L A S T C Y C L E

RHTEST= 0.02101 UTEST= 2076.5208

ITERATION NO./POINT/ERROR/EPSILON 45 731 1.158260 0.010000

U-FIELD OF LAST CYCLE.

U-FIELD OF THIS CYCLE.

1	1	2	3	4	5	6	7	8	2100.000	2100.000	2100.000	2100.000	2100.000	2100.000	2100.000	2100.000
1	9	10	11	12	13	14	15	16	2100.000	2100.000	2100.000	2100.000	2100.000	2100.000	2100.000	2100.000
1	17	0	0	0	0	0	0	0	2100.000	0.	0.	0.	0.	0.	0.	0.
2	1	2	3	4	5	6	7	8	2100.000	2100.000	2100.000	2100.000	2100.000	2100.000	2100.000	2100.000
2	9	10	11	12	13	14	15	16	2100.000	2100.000	2100.000	2098.149	2092.416	2086.159	2081.350	2078.047
2	17	0	0	0	0	0	0	0	2075.616	0.	0.	0.	0.	0.	0.	0.
3	1	2	3	4	5	6	7	8	2100.000	2100.000	2100.000	2100.000	2100.000	2100.000	2100.000	2100.000
3	9	10	11	12	13	14	15	16	2100.000	2095.462	2081.540	2071.059	2061.069	2052.519	2046.059	2041.935
3	17	0	0	0	0	0	0	0	2039.407	0.	0.	0.	0.	0.	0.	0.
4	1	2	3	4	5	6	7	8	2100.000	2100.000	2100.000	2100.000	2100.000	2100.000	2100.000	2100.000
4	9	10	11	12	13	14	15	16	2083.743	2062.922	2045.955	2030.324	2017.135	2006.624	1996.943	1994.184
4	17	0	0	0	0	0	0	0	1991.504	0.	0.	0.	0.	0.	0.	0.
5	1	2	3	4	5	6	7	8	2100.000	2100.000	2100.000	2100.000	2100.000	2100.000	2100.000	2078.025
5	9	10	11	12	13	14	15	16	2047.022	2018.753	1995.323	1975.905	1960.271	1948.328	1939.624	1934.472
5	17	0	0	0	0	0	0	0	1931.834	0.	0.	0.	0.	0.	0.	0.
6	1	2	3	4	5	6	7	8	2100.000	2100.000	2100.000	2100.000	2100.000	2100.000	2089.024	2019.733
6	9	10	11	12	13	14	15	16	1983.592	1952.847	1927.215	1906.299	1889.605	1877.104	1868.052	1862.869
6	17	0	0	0	0	0	0	0	1860.201	0.	0.	0.	0.	0.	0.	0.
7	1	2	3	4	5	6	7	8	1321.516	1348.510	1441.036	1642.727	2100.000	2013.012	1944.769	1920.007
7	9	10	11	12	13	14	15	16	1892.413	1864.680	1840.549	1820.699	1804.637	1792.687	1784.381	1779.178
7	17	0	0	0	0	0	0	0	1776.572	0.	0.	0.	0.	0.	0.	0.
8	1	2	3	4	5	6	7	8	1294.523	1317.591	1392.308	1527.453	1712.469	1759.447	1782.381	1792.678
8	9	10	11	12	13	14	15	16	1775.476	1755.352	1735.946	1719.298	1705.672	1695.254	1688.129	1683.670
8	17	0	0	0	0	0	0	0	1681.251	0.	0.	0.	0.	0.	0.	0.
9	1	2	3	4	5	6	7	8	1221.391	1238.235	1290.344	1374.624	1472.642	1533.102	1575.227	1614.565
9	9	10	11	12	13	14	15	16	1634.947	1626.525	1614.346	1602.915	1593.249	1585.531	1580.255	1577.107
9	17	0	0	0	0	0	0	0	1575.010	0.	0.	0.	0.	0.	0.	0.
10	1	2	3	4	5	6	7	8	1114.473	1126.110	1161.031	1215.065	1276.978	1329.756	1374.931	1418.361
10	9	10	11	12	13	14	15	16	1464.381	1480.295	1477.766	1473.152	1468.760	1464.839	1462.347	1460.778
10	17	0	0	0	0	0	0	0	1459.138	0.	0.	0.	0.	0.	0.	0.
11	1	2	3	4	5	6	7	8	984.231	992.203	1015.782	1052.090	1095.226	1135.465	1180.812	1224.535
11	9	10	11	12	13	14	15	16	1272.792	1318.151	1327.968	1331.621	1333.803	1334.975	1335.902	1336.491
11	17	0	0	0	0	0	0	0	1335.449	0.	0.	0.	0.	0.	0.	0.
12	1	2	3	4	5	6	7	8	838.244	843.089	859.941	885.343	916.972	951.955	989.623	1031.285
12	9	10	11	12	13	14	15	16	1079.395	1136.768	1165.733	1180.189	1190.535	1198.125	1203.318	1206.589
12	17	0	0	0	0	0	0	0	1206.303	0.	0.	0.	0.	0.	0.	0.
13	1	2	3	4	5	6	7	8	681.319	685.090	696.440	714.563	738.137	766.065	798.395	836.579
13	9	10	11	12	13	14	15	16	883.230	942.453	992.999	1021.718	1041.746	1057.084	1067.518	1074.622
13	17	0	0	0	0	0	0	0	1074.668	0.	0.	0.	0.	0.	0.	0.
14	1	2	3	4	5	6	7	8	516.850	519.418	527.217	539.935	557.096	578.513	604.845	636.023
14	9	10	11	12	13	14	15	16	681.499	739.830	811.687	856.884	890.136	915.222	932.144	942.456
14	17	0	0	0	0	0	0	0	944.200	0.	0.	0.	0.	0.	0.	0.
15	1	2	3	4	5	6	7	8	347.244	348.851	353.807	362.015	373.406	388.215	407.423	433.426
15	9	10	11	12	13	14	15	16	471.131	529.535	620.954	686.078	739.934	777.146	801.732	816.257
15	17	0	0	0	0	0	0	0	819.200	0.	0.	0.	0.	0.	0.	0.
16	1	2	3	4	5	6	7	8	174.407	175.192	177.607	181.659	187.393	195.064	205.468	220.666
16	9	10	11	12	13	14	15	16	246.024	297.075	425.511	519.717	597.910	648.472	681.568	700.269
16	17	0	0	0	0	0	0	0	704.342	0.	0.	0.	0.	0.	0.	0.
17	1	2	3	4	5	6	7	8	0.	0.	0.	0.	0.	0.	0.	0.
17	9	10	11	12	13	14	15	16	0.	0.	243.344	376.486	472.350	537.583	577.222	599.120

17	17	0	0	0	0	0	0	0	603.997	0.	0.	0.	0.	0.	0.	0.
18	1	2	3	4	5	6	7	8	0.	0.	0.	0.	0.	0.	0.	0.
18	9	10	11	12	13	14	15	16	0.	0.	166.402	283.470	375.212	451.018	492.893	516.057
18	17	0	0	0	0	0	0	0	521.192	0.	0.	0.	0.	0.	0.	0.
19	1	2	3	4	5	6	7	8	0.	0.	0.	0.	0.	0.	0.	0.
19	9	10	11	12	13	14	15	16	0.	0.	128.290	226.013	308.141	382.212	427.455	451.554
19	17	0	0	0	0	0	0	0	456.587	0.	0.	0.	0.	0.	0.	0.
20	1	2	3	4	5	6	7	8	0.	0.	0.	0.	0.	0.	0.	0.
20	9	10	11	12	13	14	15	16	0.	0.	107.594	189.918	261.963	330.366	380.367	405.176
20	17	0	0	0	0	0	0	0	410.027	0.	0.	0.	0.	0.	0.	0.
21	1	2	3	4	5	6	7	8	0.	0.	0.	0.	0.	0.	0.	0.
21	9	10	11	12	13	14	15	16	0.	0.	96.441	167.246	230.469	290.938	350.606	375.202
21	17	0	0	0	0	0	0	0	379.383	0.	0.	0.	0.	0.	0.	0.
22	1	2	3	4	5	6	7	8	0.	0.	0.	0.	0.	0.	0.	0.
22	9	10	11	12	13	14	15	16	0.	0.	92.284	154.578	210.888	265.839	325.070	356.991
22	17	0	0	0	0	0	0	0	361.263	0.	0.	0.	0.	0.	0.	0.
23	1	2	3	4	5	6	7	8	0.	0.	0.	0.	0.	0.	0.	0.
23	9	10	11	12	13	14	15	16	0.	0.	96.074	151.393	200.507	249.215	302.712	353.366
23	17	0	0	0	0	0	0	0	355.073	0.	0.	0.	0.	0.	0.	0.
24	1	2	3	4	5	6	7	8	0.737	0.835	1.169	1.848	3.084	6.270	9.117	15.985
24	9	10	11	12	13	14	15	16	28.777	54.889	117.424	157.118	196.960	236.746	285.859	349.051
24	17	0	0	0	0	0	0	0	349.208	0.	0.	0.	0.	0.	0.	0.
25	1	2	3	4	5	6	7	8	1.278	1.449	2.030	3.211	5.363	9.154	15.747	27.137
25	9	10	11	12	13	14	15	16	46.667	79.686	133.230	163.483	196.153	231.924	273.465	330.491
25	17	0	0	0	0	0	0	0	336.003	0.	0.	0.	0.	0.	0.	0.
26	1	2	3	4	5	6	7	8	1.479	1.677	2.353	3.730	6.250	10.706	18.480	31.867
26	9	10	11	12	13	14	15	16	54.353	90.140	141.214	167.206	195.593	226.600	261.215	309.468
26	17	0	0	0	0	0	0	0	320.914	0.	0.	0.	0.	0.	0.	0.
27	1	2	3	4	5	6	7	8	1.283	1.456	2.048	3.258	5.491	9.498	16.659	29.490
27	9	10	11	12	13	14	15	16	52.381	91.510	141.808	167.684	194.859	223.206	252.600	281.604
27	17	0	0	0	0	0	0	0	309.890	0.	0.	0.	0.	0.	0.	0.
28	1	2	3	4	5	6	7	8	0.742	0.843	1.187	1.896	3.218	5.642	10.159	19.039
28	9	10	11	12	13	14	15	16	38.046	84.831	137.248	166.184	194.946	223.843	252.759	290.992
28	17	0	0	0	0	0	0	0	309.418	0.	0.	0.	0.	0.	0.	0.
29	1	2	3	4	5	6	7	8	0.	0.	0.	0.	0.	0.	0.	0.
29	9	10	11	12	13	14	15	16	0.	72.795	130.611	165.009	197.330	229.233	262.394	302.985
29	17	0	0	0	0	0	0	0	320.971	0.	0.	0.	0.	0.	0.	0.
30	1	2	3	4	5	6	7	8	0.	0.	0.	0.	0.	0.	0.	0.
30	9	10	11	12	13	14	15	16	0.	73.019	127.794	167.334	203.635	239.421	278.148	332.947
30	17	0	0	0	0	0	0	0	337.920	0.	0.	0.	0.	0.	0.	0.
31	1	2	3	4	5	6	7	8	0.	0.	0.	0.	0.	0.	0.	0.
31	9	10	11	12	13	14	15	16	0.	78.495	131.676	175.535	215.093	254.195	297.052	353.290
31	17	0	0	0	0	0	0	0	354.250	0.	0.	0.	0.	0.	0.	0.
32	1	2	3	4	5	6	7	8	0.	0.	0.	0.	0.	0.	0.	0.
32	9	10	11	12	13	14	15	16	0.	88.659	144.813	191.522	232.969	273.918	319.669	365.341
32	17	0	0	0	0	0	0	0	366.134	0.	0.	0.	0.	0.	0.	0.
33	1	2	3	4	5	6	7	8	0.	0.	0.	0.	0.	0.	0.	0.
33	9	10	11	12	13	14	15	16	0.	111.833	171.018	217.084	257.923	298.594	343.735	376.537
33	17	0	0	0	0	0	0	0	377.639	0.	0.	0.	0.	0.	0.	0.
34	1	2	3	4	5	6	7	8	53.960	54.313	55.451	57.538	60.885	66.080	74.343	88.567
34	9	10	11	12	13	14	15	16	116.660	173.363	214.352	252.518	289.669	328.588	368.269	388.708
34	17	0	0	0	0	0	0	0	390.434	0.	0.	0.	0.	0.	0.	0.
35	1	2	3	4	5	6	7	8	107.215	107.893	110.269	114.028	120.278	129.701	143.872	165.613
35	9	10	11	12	13	14	15	16	198.878	233.290	262.380	293.035	325.644	361.451	392.386	406.077
35	17	0	0	0	0	0	0	0	407.412	0.	0.	0.	0.	0.	0.	0.
36	1	2	3	4	5	6	7	8	159.111	160.056	163.118	168.617	177.146	189.642	207.615	233.507
36	9	10	11	12	13	14	15	16	265.021	286.855	309.424	334.736	363.203	394.563	417.052	426.619
36	17	0	0	0	0	0	0	0	427.438	0.	0.	0.	0.	0.	0.	0.
37	1	2	3	4	5	6	7	8	209.101	210.280	214.029	220.720	230.927	245.495	265.641	293.093

37	9	10	11	12	13	14	15	16	320.829	336.004	354.077	375.574	401.078	425.880	440.926	448.302
37	17	0	0	0	0	0	0	0	448.788	0.	0.	0.	0.	0.	0.	0.
38	1	2	3	4	5	6	7	8	256.726	258.078	262.364	269.950	281.369	297.341	318.731	345.882
38	9	10	11	12	13	14	15	16	368.788	380.332	395.375	414.084	436.638	454.964	464.901	470.172
38	17	0	0	0	0	0	0	0	470.399	0.	0.	0.	0.	0.	0.	0.
39	1	2	3	4	5	6	7	8	301.653	303.138	307.830	316.086	328.406	345.476	368.284	392.591
39	9	10	11	12	13	14	15	16	409.327	419.557	432.868	449.843	468.315	481.389	488.005	491.451
39	17	0	0	0	0	0	0	0	491.494	0.	0.	0.	0.	0.	0.	0.
40	1	2	3	4	5	6	7	8	343.600	345.185	350.183	358.937	371.908	389.672	412.816	434.368
40	9	10	11	12	13	14	15	16	444.356	454.202	466.518	482.219	496.005	504.733	509.288	511.669
40	17	0	0	0	0	0	0	0	511.506	0.	0.	0.	0.	0.	0.	0.
41	1	2	3	4	5	6	7	8	382.385	384.047	389.279	398.416	411.905	430.358	451.415	469.508
41	9	10	11	12	13	14	15	16	476.316	485.136	496.428	510.320	520.002	525.347	528.449	530.099
41	17	0	0	0	0	0	0	0	529.792	0.	0.	0.	0.	0.	0.	0.
42	1	2	3	4	5	6	7	8	417.833	419.556	424.970	434.400	448.256	467.042	484.876	498.929
42	9	10	11	12	13	14	15	16	504.383	512.335	522.968	533.400	540.020	543.157	545.211	546.278
42	17	0	0	0	0	0	0	0	545.878	0.	0.	0.	0.	0.	0.	0.
43	1	2	3	4	5	6	7	8	449.847	451.620	457.187	466.864	481.048	499.152	514.200	522.735
43	9	10	11	12	13	14	15	16	528.146	535.587	545.365	552.333	556.362	558.023	559.303	559.992
43	17	0	0	0	0	0	0	0	559.517	0.	0.	0.	0.	0.	0.	0.
44	1	2	3	4	5	6	7	8	478.301	480.118	485.822	495.723	510.245	525.219	538.642	542.848
44	9	10	11	12	13	14	15	16	548.099	555.142	563.006	567.356	569.245	569.922	570.567	570.992
44	17	0	0	0	0	0	0	0	570.471	0.	0.	0.	0.	0.	0.	0.
45	1	2	3	4	5	6	7	8	503.130	504.992	510.829	520.913	534.827	546.102	557.547	559.972
45	9	10	11	12	13	14	15	16	564.532	571.196	575.904	578.417	578.919	578.865	578.934	579.196
45	17	0	0	0	0	0	0	0	578.653	0.	0.	0.	0.	0.	0.	0.
46	1	2	3	4	5	6	7	8	524.220	526.133	532.142	542.626	553.840	563.684	570.585	572.924
46	9	10	11	12	13	14	15	16	577.057	582.759	585.107	585.874	585.368	584.804	584.427	584.567
46	17	0	0	0	0	0	0	0	584.015	0.	0.	0.	0.	0.	0.	0.
47	1	2	3	4	5	6	7	8	541.496	543.453	549.578	559.266	567.741	577.440	579.674	582.112
47	9	10	11	12	13	14	15	16	586.095	589.663	590.414	589.857	588.669	587.766	587.114	587.154
47	17	0	0	0	0	0	0	0	586.597	0.	0.	0.	0.	0.	0.	0.
48	1	2	3	4	5	6	7	8	554.843	556.859	563.027	570.623	576.870	585.640	585.801	587.784
48	9	10	11	12	13	14	15	16	591.344	592.327	591.983	590.529	588.920	587.783	586.983	586.954
48	17	0	0	0	0	0	0	0	586.400	0.	0.	0.	0.	0.	0.	0.
49	1	2	3	4	5	6	7	8	564.169	566.394	571.412	577.037	583.020	588.012	588.017	589.820
49	9	10	11	12	13	14	15	16	592.056	591.494	590.124	588.117	586.235	584.964	584.099	584.043
49	17	0	0	0	0	0	0	0	583.502	0.	0.	0.	0.	0.	0.	0.
50	1	2	3	4	5	6	7	8	569.031	571.086	575.071	578.626	585.075	586.121	586.365	588.219
50	9	10	11	12	13	14	15	16	588.422	587.026	584.984	582.689	580.705	579.385	578.529	578.483
50	17	0	0	0	0	0	0	0	577.966	0.	0.	0.	0.	0.	0.	0.
51	1	2	3	4	5	6	7	8	569.372	570.883	573.501	575.933	582.061	580.785	581.092	582.474
51	9	10	11	12	13	14	15	16	581.128	579.221	576.792	574.435	572.524	571.203	570.424	570.423
51	17	0	0	0	0	0	0	0	569.938	0.	0.	0.	0.	0.	0.	0.
52	1	2	3	4	5	6	7	8	564.629	566.156	566.968	569.848	573.252	571.774	572.245	572.379
52	9	10	11	12	13	14	15	16	570.413	568.214	565.771	563.549	561.833	561.596	559.941	560.000
52	17	0	0	0	0	0	0	0	559.556	0.	0.	0.	0.	0.	0.	0.
53	1	2	3	4	5	6	7	8	554.593	556.351	555.906	559.514	559.778	558.790	559.571	558.223
53	9	10	11	12	13	14	15	16	556.372	554.275	552.123	550.240	548.845	547.790	547.299	547.414
53	17	0	0	0	0	0	0	0	547.015	0.	0.	0.	0.	0.	0.	0.
54	1	2	3	4	5	6	7	8	539.751	540.486	540.490	543.975	542.260	541.930	542.410	540.901
54	9	10	11	12	13	14	15	16	539.396	537.723	536.128	534.772	533.804	533.036	532.719	532.844
54	17	0	0	0	0	0	0	0	532.515	0.	0.	0.	0.	0.	0.	0.
55	1	2	3	4	5	6	7	8	520.073	520.270	520.534	521.417	521.180	521.023	520.972	520.414
55	9	10	11	12	13	14	15	16	519.709	518.929	518.175	517.522	517.023	516.655	516.466	516.433
55	17	0	0	0	0	0	0	0	516.375	0.	0.	0.	0.	0.	0.	0.

X,Y-COORDINATE OF EQUIPOTENTIAL LINES.

EQUIPOT 2000.0 (0.02978, 0.14000)(0.02876, 0.15000)(0.02823, 0.16000)(0.03000, 0.13862)(0.03908, 0.10000)(0.03557, 0.11000)

```
EQUIPOT  2000.0  ( 0.03301, 0.12000)( 0.03114, 0.13000)( 0.04000, 0.09800)( 0.04741, 0.08000)( 0.04285, 0.09000)( 0.05000, 0.07546)
EQUIPOT  2000.0  ( 0.05128, 0.      )( 0.05133, 0.01000)( 0.05152, 0.02000)( 0.05219, 0.03000)( 0.05517, 0.05000)( 0.05198, 0.07000)
EQUIPOT  2000.0  ( 0.06000, 0.03781)( 0.06000, 0.05191)( 0.06258, 0.04000)( 0.06051, 0.05000)( 0.      , 0.      )( 0.      , 0.      )
EQUIPOT  1500.0  ( 0.05771, 0.      )( 0.05798, 0.01000)( 0.05911, 0.02000)( 0.06000, 0.02291)( 0.07000, 0.02797)( 0.07180, 0.03000)
EQUIPOT  1500.0  ( 0.07886, 0.04000)( 0.08000, 0.04452)( 0.08163, 0.05000)( 0.08376, 0.06000)( 0.08584, 0.07000)( 0.08791, 0.08000)
EQUIPOT  1500.0  ( 0.08864, 0.09000)( 0.08837, 0.10000)( 0.08793, 0.11000)( 0.08749, 0.12000)( 0.08709, 0.13000)( 0.08681, 0.14000)
EQUIPOT  1500.0  ( 0.08663, 0.15000)( 0.08647, 0.16000)( 0.      , 0.      )( 0.      , 0.      )( 0.      , 0.      )( 0.      , 0.      )
EQUIPOT  1000.0  ( 0.09879, 0.      )( 0.09942, 0.01000)( 0.10000, 0.01331)( 0.10101, 0.02000)( 0.10312, 0.03000)( 0.10534, 0.04000)
EQUIPOT  1000.0  ( 0.10742, 0.05000)( 0.10945, 0.06000)( 0.11000, 0.06249)( 0.11161, 0.07000)( 0.11405, 0.08000)( 0.11704, 0.09000)
EQUIPOT  1000.0  ( 0.11959, 0.10000)( 0.12000, 0.10244)( 0.12132, 0.11000)( 0.12275, 0.12000)( 0.12402, 0.13000)( 0.12499, 0.14000)
EQUIPOT  1000.0  ( 0.12563, 0.15000)( 0.12572, 0.16000)( 0.      , 0.      )( 0.      , 0.      )( 0.      , 0.      )( 0.      , 0.      )
EQUIPOT   500.0  ( 0.13099, 0.      )( 0.13114, 0.01000)( 0.13157, 0.02000)( 0.13224, 0.03000)( 0.13311, 0.04000)( 0.13413, 0.05000)
EQUIPOT   500.0  ( 0.13531, 0.06000)( 0.13675, 0.07000)( 0.13863, 0.08000)( 0.14000, 0.08494)( 0.14127, 0.09000)( 0.14619, 0.10000)
EQUIPOT   500.0  ( 0.15000, 0.10791)( 0.15138, 0.11000)( 0.15780, 0.12000)( 0.16000, 0.12424)( 0.16434, 0.13000)( 0.16916, 0.14000)
EQUIPOT   500.0  ( 0.17000, 0.14307)( 0.17249, 0.15000)( 0.17329, 0.16000)( 0.38797, 0.13000)( 0.38564, 0.14000)( 0.38423, 0.15000)
EQUIPOT   500.0  ( 0.38425, 0.16000)( 0.39000, 0.12458)( 0.39633, 0.11000)( 0.39166, 0.12000)( 0.40000, 0.10257)( 0.40844, 0.08000)
EQUIPOT   500.0  ( 0.40546, 0.09000)( 0.40135, 0.10000)( 0.41000, 0.07196)( 0.41516, 0.06000)( 0.41045, 0.07000)( 0.42000, 0.05056)
EQUIPOT   500.0  ( 0.42649, 0.04000)( 0.42033, 0.05000)( 0.43000, 0.03295)( 0.43874, 0.      )( 0.43799, 0.01000)( 0.43567, 0.02000)
EQUIPOT   500.0  ( 0.43170, 0.03000)( 0.      , 0.      )( 0.      , 0.      )( 0.      , 0.      )( 0.      , 0.      )( 0.      , 0.      )

X,Y-EQUIPOTENTIAL
 1 (0.052,0.    )   2 (0.052,0.010)   3 (0.053,0.020)   4 (0.054,0.030)   5 (0.064,0.040)   6 (0.063,0.050)   7 (0.061,0.060)
 8 (0.059,0.070)   9 (0.056,0.080)  10 (0.052,0.090)  11 (0.049,0.100)  12 (0.046,0.110)  13 (0.044,0.120)  14 (0.042,0.130)
15 (0.041,0.140)  16 (0.040,0.150)  17 (0.040,0.160)  18 (0.    ,0.    )
X1=.433E-01 X2=.418E-01 Y1=.124E-00 Y2=.134E-00 DX=.370E-01 CD=0.4797E-02    -1    7
X1=.418E-01 X2=.408E-01 Y1=.134E-00 Y2=.145E-00 DX=.384E-01 CD=0.4376E-02    -1    8
X1=.408E-01 X2=.402E-01 Y1=.145E-00 Y2=.155E-00 DX=.392E-01 CD=0.4166E-02     0    9
X1=.402E-01 X2=.400E-01 Y1=.155E-00 Y2=.160E-00 DX=.398E-01 CD=0.4024E-02     0   10
   X=    0.01000  NO.        Y                VX                VY
                   1   0.                1.000000E-04   0.
                   2   0.                1.000000E-04   0.
                   3   0.                1.000000E-04   0.
                   4   0.                1.000000E-04   0.
                   5   0.                1.000000E-04   0.
                   6   0.                1.000000E-04   0.
                   7   0.111537E-00      0.185962E 04   0.693254E 03
                   8   0.126105E-00      0.392333E 04   0.102294E 04
                   9   0.139965E-00      0.512227E 04   0.789410E 03
                  10   0.153390E-00      0.572269E 04   0.290984E 03
X1=.456E-01 X2=.433E-01 Y1=.113E-00 Y2=.124E-00 DX=.351E-01 CD=0.5467E-02     0    6
X1=.433E-01 X2=.418E-01 Y1=.124E-00 Y2=.134E-00 DX=.370E-01 CD=0.4797E-02     0    7
X1=.418E-01 X2=.408E-01 Y1=.134E-00 Y2=.145E-00 DX=.384E-01 CD=0.4376E-02     0    8
   X=    0.02000  NO.        Y                VX                VY
                   1   0.                1.000000E-04   0.
                   2   0.                1.000000E-04   0.
                   3   0.                1.000000E-04   0.
                   4   0.                1.000000E-04   0.
                   5   0.                1.000000E-04   0.
                   6   0.100708E-00      0.471586E 04   0.233060E 04
                   7   0.115265E-00      0.657917E 04   0.245267E 04
                   8   0.128712E-00      0.791215E 04   0.206296E 04
                   9   0.141437E-00      0.878511E 04   0.125690E 04
                  10   0.153950E-00      0.921179E 04   0.545218E 03
X1=.486E-01 X2=.456E-01 Y1=.103E-00 Y2=.113E-00 DX=.328E-01 CD=0.6438E-02     0    5
   X=    0.03000  NO.        Y                VX                VY
                   1   0.                1.000000E-04   0.
                   2   0.                1.000000E-04   0.
                   3   0.                1.000000E-04   0.
                   4   0.                1.000000E-04   0.
```

```
                  5   0.908814E-01   0.631387E 04   0.396732E 04
                  6   0.105282E-00   0.870459E 04   0.380850E 04
                  7   0.118741E-00   0.102586E 05   0.340038E 04
                  8   0.131176E-00   0.113439E 05   0.268181E 04
                  9   0.142816E-00   0.120555E 05   0.161778E 04
                 10   0.154537E-00   0.124044E 05   0.724668E 03
X1=.559E-01 X2=.520E-01 Y1=.793E-01 Y2=.913E-01 DX=.256E-01 CD=0.1151E-01   -1    3
X1=.520E-01 X2=.486E-01 Y1=.913E-01 Y2=.103E-00 DX=.297E-01 CD=0.8132E-02    0    4
   X=   0.04000  NO.        Y              VX              VY
                  1   0.              1.000000E-04   0.
                  2   0.              1.000000E-04   0.
                  3   0.641055E-01   0.260289E 04   0.249603E 04
                  4   0.819782E-01   0.724446E 04   0.565226E 04
                  5   0.967159E-01   0.103477E 05   0.575376E 04
                  6   0.109439E-00   0.123603E 05   0.494791E 04
                  7   0.121900E-00   0.136814E 05   0.416133E 04
                  8   0.133435E-00   0.145942E 05   0.317650E 04
                  9   0.144111E-00   0.151921E 05   0.191169E 04
                 10   0.155106E-00   0.154868E 05   0.860775E 03
X1=.597E-01 X2=.559E-01 Y1=.656E-01 Y2=.793E-01 DX=.199E-01 CD=0.2048E-01   -1    2
X1=.559E-01 X2=.520E-01 Y1=.793E-01 Y2=.913E-01 DX=.256E-01 CD=0.1151E-01    0    3
   X=   0.05000  NO.        Y              VX              VY
                  1   0.              1.000000E-04   0.
                  2   0.541993E-01   0.322701E 04   0.379355E 04
                  3   0.736950E-01   0.838487E 04   0.804063E 04
                  4   0.889451E-01   0.120776E 05   0.780924E 04
                  5   0.101916E-00   0.143158E 05   0.707212E 04
                  6   0.113256E-00   0.159155E 05   0.584438E 04
                  7   0.124808E-00   0.170094E 05   0.476416E 04
                  8   0.135519E-00   0.177713E 05   0.356873E 04
                  9   0.145325E-00   0.182733E 05   0.214941E 04
                 10   0.155642E-00   0.185225E 05   0.964749E 03
X1=.597E-01 X2=.559E-01 Y1=.656E-01 Y2=.793E-01 DX=.199E-01 CD=0.2048E-01    0    2
   X=   0.06000  NO.        Y              VX              VY
                  1   0.              1.000000E-04   0.
                  2   0.659549E-01   0.101424E 05   0.119230E 05
                  3   0.816731E-01   0.143271E 05   0.100793E 05
                  4   0.948744E-01   0.165126E 05   0.914295E 04
                  5   0.106558E-00   0.181445E 05   0.799633E 04
                  6   0.116755E-00   0.193960E 05   0.651262E 04
                  7   0.127486E-00   0.202802E 05   0.522155E 04
                  8   0.137442E-00   0.209070E 05   0.386914E 04
                  9   0.146458E-00   0.213243E 05   0.233556E 04
                 10   0.156144E-00   0.215331E 05   0.104274E 04
X1=.633E-01 X2=.597E-01 Y1=.488E-01 Y2=.656E-01 DX=.112E-01 CD=0.7223E-01    0    1
   X=   0.07000  NO.        Y              VX              VY
                  1   0.585000E-01   0.122137E 05   0.177099E 05
                  2   0.751146E-01   0.171116E 05   0.130408E 05
                  3   0.879915E-01   0.191970E 05   0.111025E 05
                  4   0.100019E-00   0.206202E 05   0.996212E 04
                  5   0.110714E-00   0.218189E 05   0.861267E 04
                  6   0.119953E-00   0.227927E 05   0.697977E 04
                  7   0.129946E-00   0.234954E 05   0.554874E 04
                  8   0.139213E-00   0.240029E 05   0.408662E 04
                  9   0.147511E-00   0.243460E 05   0.247399E 04
                 10   0.156609E-00   0.245190E 05   0.109987E 04
   X=   0.08000  NO.        Y              VX              VY
                  1   0.697770E-01   0.187982E 05   0.172622E 05
                  2   0.817708E-01   0.225195E 05   0.133383E 05
```

	3	0.933111E-01	0.235417E 05	0.116329E 05
	4	0.104543E-00	0.244697E 05	0.104335E 05
	5	0.114447E-00	0.253449E 05	0.898992E 04
	6	0.122869E-00	0.260964E 05	0.727714E 04
	7	0.132201E-00	0.266440E 05	0.575972E 04
	8	0.140842E-00	0.270469E 05	0.422853E 04
	9	0.148487E-00	0.273257E 05	0.256876E 04
	10	0.157040E-00	0.274677E 05	0.113983E 04
X= 0.09000	NO.	Y	VX	VY
	1	0.774085E-01	0.249516E 05	0.161254E 05
	2	0.871033E-01	0.271582E 05	0.131526E 05
	3	0.979078E-01	0.275197E 05	0.118381E 05
	4	0.108554E-00	0.280930E 05	0.106529E 05
	5	0.117807E-00	0.287187E 05	0.917689E 04
	6	0.125525E-00	0.292947E 05	0.743302E 04
	7	0.134265E-00	0.297092E 05	0.586823E 04
	8	0.142337E-00	0.300210E 05	0.430259E 04
	9	0.149389E-00	0.302431E 05	0.252443E 04
	10	0.157438E-00	0.303594E 05	0.116577E 04
X= 0.10000	NO.	Y	VX	VY
	1	0.830877E-01	0.298761E 05	0.150126E 05
	2	0.915359E-01	0.312386E 05	0.127324E 05
	3	0.101934E-00	0.312082E 05	0.118069E 05
	4	0.112133E-00	0.315133E 05	0.106763E 05
	5	0.120838E-00	0.319381E 05	0.920860E 04
	6	0.127941E-00	0.323695E 05	0.746512E 04
	7	0.136149E-00	0.326691E 05	0.588797E 04
	8	0.143707E-00	0.329029E 05	0.431614E 04
	9	0.150221E-00	0.330740E 05	0.264563E 04
	10	0.157808E-00	0.331693E 05	0.118049E 04
X= 0.11000	NO.	Y	VX	VY
	1	0.876128E-01	0.340898E 05	0.139324E 05
	2	0.952948E-01	0.350414E 05	0.121814E 05
	3	0.105486E-00	0.346704E 05	0.115903E 05
	4	0.115334E-00	0.347414E 05	0.105359E 05
	5	0.123574E-00	0.349924E 05	0.910587E 04
	6	0.130136E-00	0.352982E 05	0.738593E 04
	7	0.137868E-00	0.354998E 05	0.582951E 04
	8	0.144960E-00	0.356658E 05	0.427503E 04
	9	0.150988E-00	0.357922E 05	0.263643E 04
	10	0.158151E-00	0.358691E 05	0.118636E 04
X= 0.12000	NO.	Y	VX	VY
	1	0.913367E-01	0.379531E 05	0.128955E 05
	2	0.985101E-01	0.385556E 05	0.114820E 05
	3	0.108625E-00	0.379017E 05	0.111947E 05
	4	0.118201E-00	0.377625E 05	0.102493E 05
	5	0.126043E-00	0.378632E 05	0.888057E 04
	6	0.132125E-00	0.380581E 05	0.720732E 04
	7	0.139433E-00	0.381709E 05	0.569906E 04
	8	0.146104E-00	0.382783E 05	0.418597E 04
	9	0.151694E-00	0.383657E 05	0.260024E 04
	10	0.158470E-00	0.384262E 05	0.118546E 04
X= 0.13000	NO.	Y	VX	VY
	1	0.944397E-01	0.415164E 05	0.117642E 05
	2	0.101258E-00	0.418174E 05	0.106329E 05
	3	0.111392E-00	0.409201E 05	0.106174E 05
	4	0.120763E-00	0.405677E 05	0.981618E 04
	5	0.128265E-00	0.405230E 05	0.853808E 04
	6	0.133923E-00	0.406213E 05	0.693575E 04

		7	0.140854E-00	0.406472E 05	0.550021E 04
		8	0.147147E-00	0.407031E 05	0.405520E 04
		9	0.152344E-00	0.407596E 05	0.254009E 04
		10	0.158768E-00	0.408027E 05	0.117976E 04
X=	0.14000	NO.	Y	VX	VY
		1	0.970124E-01	0.448398E 05	0.104526E 05
		2	0.103584E-00	0.449075E 05	0.957238E 04
		3	0.113807E-00	0.437374E 05	0.982768E 04
		4	0.123038E-00	0.431154E 05	0.922168E 04
		5	0.130257E-00	0.429247E 05	0.808049E 04
		6	0.135540E-00	0.429410E 05	0.657505E 04
		7	0.142140E-00	0.428872E 05	0.523731E 04
		8	0.148097E-00	0.428965E 05	0.388766E 04
		9	0.152941E-00	0.429279E 05	0.245953E 04
		10	0.159049E-00	0.429563E 05	0.117124E 04
X=	0.15000	NO.	Y	VX	VY
		1	0.990967E-01	0.479869E 05	0.889575E 04
		2	0.105514E-00	0.477426E 05	0.831038E 04
		3	0.115876E-00	0.462146E 05	0.877794E 04
		4	0.125039E-00	0.453394E 05	0.847716E 04
		5	0.132030E-00	0.450122E 05	0.751757E 04
		6	0.136985E-00	0.449610E 05	0.613282E 04
		7	0.143297E-00	0.448427E 05	0.492101E 04
		8	0.148961E-00	0.448129E 05	0.359155E 04
		9	0.153491E-00	0.448272E 05	0.236414E 04
		10	0.159315E-00	0.448436E 05	0.116207E 04
X=	0.16000	NO.	Y	VX	VY
		1	0.100681E-00	0.507042E 05	0.674019E 04
		2	0.107049E-00	0.500669E 05	0.659739E 04
		3	0.117603E-00	0.482192E 05	0.752850E 04
		4	0.126778E-00	0.471647E 05	0.750780E 04
		5	0.133600E-00	0.467302E 05	0.687850E 04
		6	0.138270E-00	0.466292E 05	0.563110E 04
		7	0.144337E-00	0.464707E 05	0.457246E 04
		8	0.149748E-00	0.464144E 05	0.348041E 04
		9	0.153998E-00	0.464205E 05	0.226254E 04
		10	0.159569E-00	0.464292E 05	0.115433E 04
X=	0.17000	NO.	Y	VX	VY
		1	0.101781E-00	0.518139E 05	0.453477E 04
		2	0.108205E-00	0.513350E 05	0.503087E 04
		3	0.119011E-00	0.496398E 05	0.625250E 04
		4	0.128269E-00	0.485085E 05	0.666310E 04
		5	0.134983E-00	0.480324E 05	0.623077E 04
		6	0.139407E-00	0.479188E 05	0.511676E 04
		7	0.145271E-00	0.477515E 05	0.422252E 04
		8	0.150465E-00	0.476870E 05	0.327265E 04
		9	0.154468E-00	0.476911E 05	0.216546E 04
		10	0.159813E-00	0.476974E 05	0.114964E 04
X=	0.18000	NO.	Y	VX	VY
		1	0.102493E-00	0.523983E 05	0.288636E 04
		2	0.109043E-00	0.520987E 05	0.363463E 04
		3	0.120141E-00	0.505977E 05	0.507802E 04
		4	0.129534E-00	0.495175E 05	0.573874E 04
		5	0.136202E-00	0.490264E 05	0.560223E 04
		6	0.140412E-00	0.488945E 05	0.461474E 04
		7	0.146111E-00	0.487214E 05	0.388884E 04
		8	0.151125E-00	0.486522E 05	0.307969E 04
		9	0.154909E-00	0.486562E 05	0.208019E 04
		10	0.159948E-00	0.486624E 05	-0.114861E 04

X=	0.19000	NO.	Y	VX	VY
		1	0.102916E-00	0.527391E 05	0.156341E 04
		2	0.109626E-00	0.525816E 05	0.247109E 04
		3	0.121036E-00	0.512560E 05	0.403189E 04
		4	0.130598E-00	0.502626E 05	0.487841E 04
		5	0.137272E-00	0.497363E 05	0.496747E 04
		6	0.141298E-00	0.495828E 05	0.411752E 04
		7	0.146872E-00	0.494064E 05	0.357252E 04
		8	0.151735E-00	0.493351E 05	0.290426E 04
		9	0.155326E-00	0.493405E 05	0.200782E 04
		10	0.159714E-00	0.493486E 05	-0.115104E 04
X=	0.20000	NO.	Y	VX	VY
		1	0.103107E-00	0.529386E 05	0.449992E 03
		2	0.110001E-00	0.528886E 05	0.148304E 04
		3	0.121730E-00	0.517123E 05	0.311339E 04
		4	0.131480E-00	0.508106E 05	0.403658E 04
		5	0.138200E-00	0.501972E 05	0.429871E 04
		6	0.142075E-00	0.500141E 05	0.361826E 04
		7	0.147562E-00	0.498409E 05	0.327884E 04
		8	0.152306E-00	0.497730E 05	0.275119E 04
		9	0.155725E-00	0.497818E 05	0.194886E 04
		10	0.159481E-00	0.497938E 05	-0.115622E 04
X=	0.21000	NO.	Y	VX	VY
		1	0.103099E-00	0.530311E 05	-0.527079E 03
		2	0.110200E-00	0.530619E 05	0.624550E 03
		3	0.122252E-00	0.519997E 05	0.230240E 04
		4	0.132190E-00	0.511665E 05	0.320271E 04
		5	0.138984E-00	0.505617E 05	0.360629E 04
		6	0.142744E-00	0.503555E 05	0.309449E 04
		7	0.148187E-00	0.501259E 05	0.297259E 04
		8	0.152843E-00	0.500357E 05	0.250736E 04
		9	0.156111E-00	0.500440E 05	0.189906E 04
		10	0.159248E-00	0.500555E 05	-0.116399E 04
X=	0.22000	NO.	Y	VX	VY
		1	0.102916E-00	0.530081E 05	-0.142300E 04
		2	0.110247E-00	0.531073E 05	-0.130681E 03
		3	0.122625E-00	0.521644E 05	0.158187E 04
		4	0.132739E-00	0.514200E 05	0.242675E 04
		5	0.139625E-00	0.508737E 05	0.289194E 04
		6	0.143294E-00	0.505940E 05	0.245746E 04
		7	0.148740E-00	0.502193E 05	0.257427E 04
		8	0.153349E-00	0.500993E 05	0.246323E 04
		9	0.156487E-00	0.501194E 05	0.186652E 04
		10	0.159015E-00	0.501413E 05	-0.117102E 04
X=	0.23000	NO.	Y	VX	VY
		1	0.102576E-00	0.527756E 05	-0.216598E 04
		2	0.110163E-00	0.530321E 05	-0.754301E 03
		3	0.122868E-00	0.522396E 05	0.959324E 03
		4	0.133143E-00	0.515927E 05	0.173730E 04
		5	0.140117E-00	0.511092E 05	0.213201E 04
		6	0.143700E-00	0.507714E 05	0.155935E 04
		7	0.149203E-00	0.502997E 05	0.207918E 04
		8	0.153828E-00	0.501694E 05	0.233865E 04
		9	0.156858E-00	0.501963E 05	0.185720E 04
		10	0.158782E-00	0.502231E 05	-0.117371E 04
X=	0.24000	NO.	Y	VX	VY
		1	0.102112E-00	0.525896E 05	-0.272836E 04
		2	0.109975E-00	0.529462E 05	-0.123872E 04
		3	0.123001E-00	0.522751E 05	0.431592E 03

		4	0.133421E-00	0.517134E 05	0.113202E 04
		5	0.140460E-00	0.512350E 05	0.137900E 04
		6	0.143943E-00	0.509641E 05	0.815035E 03
		7	0.149566E-00	0.505194E 05	0.157542E 04
		8	0.154283E-00	0.503787E 05	0.223700E 04
		9	0.157226E-00	0.503955E 05	0.134651E 04
		10	0.158548E-00	0.504168E 05	-0.117921E 04
X=	0.25000	NO.	Y	VX	VY
		1	0.101546E-00	0.524908E 05	-0.321973E 04
		2	0.109704E-00	0.528946E 05	-0.153760E 04
		3	0.123040E-00	0.523027E 05	-0.208384E 02
		4	0.133590E-00	0.518214E 05	0.611741E 03
		5	0.140666E-00	0.514693E 05	0.735698E 03
		6	0.144033E-00	0.512257E 05	0.998833E 02
		7	0.149831E-00	0.509109E 05	0.111990E 04
		8	0.154710E-00	0.506955E 05	0.207357E 04
		9	0.157585E-00	0.506586E 05	0.178337E 04
		10	0.158310E-00	0.506609E 05	-0.122163E 04
X=	0.26000	NO.	Y	VX	VY
		1	0.100886E-00	0.524828E 05	-0.370433E 04
		2	0.109359E-00	0.528880E 05	-0.200254E 04
		3	0.122998E-00	0.523234E 05	-0.425127E 03
		4	0.133665E-00	0.518940E 05	0.171932E 03
		5	0.140762E-00	0.516050E 05	0.251782E 03
		6	0.144003E-00	0.514327E 05	-0.408118E 03
		7	0.150010E-00	0.512458E 05	0.703766E 03
		8	0.155087E-00	0.509447E 05	0.176101E 04
		9	0.157923E-00	0.508561E 05	0.164699E 04
		10	0.158058E-00	0.508506E 05	-0.133667E 04
X=	0.27000	NO.	Y	VX	VY
		1	0.100131E-00	0.525433E 05	-0.422774E 04
		2	0.108945E-00	0.529119E 05	-0.237934E 04
		3	0.122879E-00	0.523204E 05	-0.818151E 03
		4	0.133659E-00	0.518884E 05	-0.231533E 03
		5	0.140772E-00	0.516036E 05	-0.150814E 03
		6	0.143884E-00	0.514347E 05	-0.809903E 03
		7	0.150108E-00	0.512544E 05	0.303120E 03
		8	0.155395E-00	0.509523E 05	0.137922E 04
		9	0.158232E-00	0.508632E 05	0.149251E 04
		10	0.157779E-00	0.508577E 05	-0.150398E 04
X=	0.28000	NO.	Y	VX	VY
		1	0.992695E-01	0.526365E 05	-0.483189E 04
		2	0.108455E-00	0.529676E 05	-0.280525E 04
		3	0.122682E-00	0.522760E 05	-0.123758E 04
		4	0.133573E-00	0.517922E 05	-0.651818E 03
		5	0.140698E-00	0.514562E 05	-0.611814E 03
		6	0.143680E-00	0.512339E 05	-0.128672E 04
		7	0.150128E-00	0.509459E 05	-0.101208E 03
		8	0.155637E-00	0.507222E 05	0.108238E 04
		9	0.158515E-00	0.506751E 05	0.138324E 04
		10	0.157468E-00	0.506584E 05	-0.155831E 04
X=	0.29000	NO.	Y	VX	VY
		1	0.982884E-01	0.526699E 05	-0.549979E 04
		2	0.107879E-00	0.529188E 05	-0.329739E 04
		3	0.122401E-00	0.521759E 05	-0.170626E 04
		4	0.133397E-00	0.516233E 05	-0.115844E 04
		5	0.140520E-00	0.512228E 05	-0.120850E 04
		6	0.143365E-00	0.509409E 05	-0.193420E 04
		7	0.150067E-00	0.505220E 05	-0.517127E 03

	8	0.155837E-00	0.504015E 05	0.941509E 03
	9	0.158784E-00	0.504083E 05	0.133653E 04
	10	0.157131E-00	0.503664E 05	-0.174365E 04
X= 0.30000	NO.	Y	VX	VY
	1	0.971780E-01	0.526118E 05	-0.619067E 04
	2	0.107203E-00	0.528215E 05	-0.385300E 04
	3	0.122023E-00	0.520067E 05	-0.222622E 04
	4	0.133118E-00	0.513975E 05	-0.172111E 04
	5	0.140217E-00	0.509554E 05	-0.139588E 04
	6	0.142910E-00	0.506563E 05	-0.268340E 04
	7	0.149923E-00	0.502312E 05	-0.936187E 03
	8	0.156021E-00	0.501439E 05	0.905853E 03
	9	0.159049E-00	0.501680E 05	0.132656E 04
	10	0.156781E-00	0.501146E 05	-0.176856E 04
X= 0.31000	NO.	Y	VX	VY
	1	0.959300E-01	0.524456E 05	-0.692083E 04
	2	0.106414E-00	0.526153E 05	-0.446056E 04
	3	0.121540E-00	0.517538E 05	-0.278443E 04
	4	0.132722E-00	0.511087E 05	-0.233095E 04
	5	0.139777E-00	0.506379E 05	-0.257374E 04
	6	0.142309E-00	0.503841E 05	-0.339083E 04
	7	0.149697E-00	0.500552E 05	-0.132191E 04
	8	0.156201E-00	0.499719E 05	0.896017E 03
	9	0.159314E-00	0.499968E 05	0.132446E 04
	10	0.156427E-00	0.499426E 05	-0.177709E 04
X= 0.32000	NO.	Y	VX	VY
	1	0.945290E-01	0.521043E 05	-0.772702E 04
	2	0.105503E-00	0.522604E 05	-0.509124E 04
	3	0.120945E-00	0.514055E 05	-0.335639E 04
	4	0.132203E-00	0.507613E 05	-0.295692E 04
	5	0.139206E-00	0.502924E 05	-0.318546E 04
	6	0.141575E-00	0.500734E 05	-0.398468E 04
	7	0.149402E-00	0.498852E 05	-0.163558E 04
	8	0.156379E-00	0.498073E 05	0.885903E 03
	9	0.159579E-00	0.498309E 05	0.132301E 04
	10	0.156070E-00	0.497779E 05	-0.178744E 04
X= 0.33000	NO.	Y	VX	VY
	1	0.929637E-01	0.513418E 05	-0.846457E 04
	2	0.104468E-00	0.517142E 05	-0.567437E 04
	3	0.120235E-00	0.509600E 05	-0.391134E 04
	4	0.131560E-00	0.503483E 05	-0.355079E 04
	5	0.138518E-00	0.499306E 05	-0.370946E 04
	6	0.140729E-00	0.497397E 05	-0.445900E 04
	7	0.149050E-00	0.496952E 05	-0.136509E 04
	8	0.156556E-00	0.496250E 05	0.871504E 03
	9	0.159845E-00	0.496457E 05	0.132195E 04
	10	0.155708E-00	0.495960E 05	-0.180447E 04
X= 0.34000	NO.	Y	VX	VY
	1	0.912496E-01	0.505293E 05	-0.899716E 04
	2	0.103317E-00	0.510817E 05	-0.615612E 04
	3	0.119413E-00	0.504472E 05	-0.442378E 04
	4	0.130799E-00	0.498906E 05	-0.407138E 04
	5	0.137729E-00	0.495574E 05	-0.413792E 04
	6	0.139792E-00	0.493912E 05	-0.483220E 04
	7	0.148658E-00	0.494314E 05	-0.202530E 04
	8	0.156731E-00	0.493759E 05	0.856489E 03
	9	0.159888E-00	0.493985E 05	-0.132177E 04
	10	0.155341E-00	0.493461E 05	-0.182433E 04
X= 0.35000	NO.	Y	VX	VY

	1	0.894172E-01	0.497598E 05	-0.937983E 04
	2	0.102066E-00	0.504341E 05	-0.654588E 04
	3	0.118486E-00	0.499014E 05	-0.487985E 04
	4	0.129935E-00	0.494146E 05	-0.450661E 04
	5	0.136857E-00	0.491638E 05	-0.447609E 04
	6	0.138780E-00	0.490211E 05	-0.512719E 04
	7	0.148235E-00	0.491215E 05	-0.214165E 04
	8	0.156904E-00	0.490803E 05	0.846385E 03
	9	0.159620E-00	0.491053E 05	-0.132245E 04
	10	0.154969E-00	0.490491E 05	-0.183964E 04
X= 0.36000	NO.	Y	VX	VY
	1	0.874901E-01	0.490277E 05	-0.955750E 04
	2	0.100728E-00	0.497996E 05	-0.686614E 04
	3	0.117462E-00	0.493425E 05	-0.527789E 04
	4	0.128983E-00	0.489504E 05	-0.485758E 04
	5	0.135917E-00	0.487728E 05	-0.472949E 04
	6	0.137707E-00	0.486494E 05	-0.535281E 04
	7	0.147788E-00	0.487959E 05	-0.223139E 04
	8	0.157076E-00	0.487643E 05	0.840557E 03
	9	0.159350E-00	0.487907E 05	-0.132337E 04
	10	0.154591E-00	0.487318E 05	-0.185153E 04
X= 0.37000	NO.	Y	VX	VY
	1	0.854857E-01	0.483527E 05	-0.986186E 04
	2	0.993138E-01	0.491982E 05	-0.713304E 04
	3	0.116352E-00	0.488069E 05	-0.552534E 04
	4	0.127959E-00	0.485056E 05	-0.512945E 04
	5	0.134925E-00	0.483824E 05	-0.491009E 04
	6	0.136585E-00	0.482711E 05	-0.551766E 04
	7	0.147322E-00	0.484641E 05	-0.230219E 04
	8	0.157249E-00	0.484427E 05	0.837523E 03
	9	0.159077E-00	0.484701E 05	-0.132415E 04
	10	0.154209E-00	0.484089E 05	-0.186187E 04
X= 0.38000	NO.	Y	VX	VY
	1	0.834155E-01	0.477534E 05	-0.100342E 05
	2	0.978324E-01	0.486421E 05	-0.736122E 04
	3	0.115162E-00	0.483110E 05	-0.592492E 04
	4	0.126875E-00	0.480910E 05	-0.533619E 04
	5	0.133892E-00	0.480091E 05	-0.503970E 04
	6	0.135426E-00	0.479050E 05	-0.563517E 04
	7	0.146840E-00	0.481386E 05	-0.235382E 04
	8	0.157422E-00	0.481271E 05	0.836429E 03
	9	0.158803E-00	0.481551E 05	-0.132454E 04
	10	0.153822E-00	0.480921E 05	-0.186985E 04
X= 0.39000	NO.	Y	VX	VY
	1	0.812856E-01	0.472231E 05	-0.101947E 05
	2	0.962903E-01	0.481365E 05	-0.756306E 04
	3	0.113905E-00	0.478575E 05	-0.616761E 04
	4	0.125745E-00	0.477156E 05	-0.548876E 04
	5	0.132829E-00	0.476678E 05	-0.513606E 04
	6	0.134236E-00	0.475675E 05	-0.572089E 04
	7	0.145346E-00	0.478295E 05	-0.239031E 04
	8	0.157596E-00	0.478256E 05	0.836851E 03
	9	0.158527E-00	0.478542E 05	-0.132425E 04
	10	0.153432E-00	0.477893E 05	-0.187496E 04
X= 0.40000	NO.	Y	VX	VY
	1	0.791011E-01	0.467315E 05	-0.103292E 05
	2	0.946928E-01	0.476795E 05	-0.774337E 04
	3	0.112591E-00	0.474527E 05	-0.635433E 04
	4	0.124580E-00	0.473783E 05	-0.559445E 04

	5	0.131740E-00	0.473602E 05	-0.520656E 04
	6	0.133023E-00	0.472622E 05	-0.578488E 04
	7	0.145842E-00	0.475466E 05	-0.241694E 04
	8	0.157772E-00	0.475488E 05	0.838472E 03
	9	0.158250E-00	0.475776E 05	-0.132308E 04
	10	0.153038E-00	0.475112E 05	-0.187734E 04
X= 0.41000	NO.	Y	VX	VY
	1	0.768691E-01	0.462924E 05	-0.104343E 05
	2	0.930447E-01	0.472705E 05	-0.790524E 04
	3	0.111232E-00	0.471097E 05	-0.649728E 04
	4	0.123388E-00	0.470863E 05	-0.566484E 04
	5	0.130633E-00	0.470902E 05	-0.525509E 04
	6	0.131791E-00	0.469937E 05	-0.583036E 04
	7	0.145330E-00	0.472968E 05	-0.243596E 04
	8	0.157949E-00	0.473040E 05	0.840755E 03
	9	0.157971E-00	0.473330E 05	-0.132104E 04
	10	0.152642E-00	0.472655E 05	-0.187751E 04
X= 0.42000	NO.	Y	VX	VY
	1	0.745963E-01	0.459206E 05	-0.105238E 05
	2	0.913507E-01	0.469176E 05	-0.805089E 04
	3	0.109837E-00	0.468212E 05	-0.650166E 04
	4	0.122177E-00	0.468418E 05	-0.571109E 04
	5	0.129511E-00	0.468620E 05	-0.528590E 04
	6	0.130544E-00	0.467665E 05	-0.585996E 04
	7	0.144812E-00	0.470845E 05	-0.244907E 04
	8	0.158128E-00	0.470955E 05	0.843364E 03
	9	0.157692E-00	0.471246E 05	-0.131813E 04
	10	0.152244E-00	0.470562E 05	-0.187592E 04
X= 0.43000	NO.	Y	VX	VY
	1	0.722876E-01	0.456047E 05	-0.106065E 05
	2	0.895157E-01	0.465181E 05	-0.817686E 04
	3	0.108416E-00	0.465858E 05	-0.657154E 04
	4	0.120952E-00	0.466455E 05	-0.573805E 04
	5	0.128379E-00	0.466770E 05	-0.530251E 04
	6	0.129287E-00	0.465825E 05	-0.587628E 04
	7	0.144290E-00	0.469136E 05	-0.245782E 04
	8	0.158307E-00	0.469274E 05	0.846078E 03
	9	0.157412E-00	0.469566E 05	-0.131438E 04
	10	0.151845E-00	0.468876E 05	-0.187304E 04
X= 0.44000	NO.	Y	VX	VY
	1	0.699476E-01	0.453344E 05	-0.106735E 05
	2	0.878457E-01	0.463684E 05	-0.828172E 04
	3	0.106977E-00	0.464078E 05	-0.671513E 04
	4	0.119719E-00	0.464960E 05	-0.574893E 04
	5	0.127241E-00	0.465362E 05	-0.530746E 04
	6	0.128023E-00	0.464424E 05	-0.588129E 04
	7	0.143765E-00	0.467859E 05	-0.246303E 04
	8	0.158488E-00	0.468015E 05	0.848695E 03
	9	0.157132E-00	0.468308E 05	-0.130992E 04
	10	0.151445E-00	0.467614E 05	-0.186935E 04
X= 0.45000	NO.	Y	VX	VY
	1	0.675823E-01	0.451279E 05	-0.107236E 05
	2	0.860465E-01	0.461837E 05	-0.837102E 04
	3	0.105526E-00	0.462816E 05	-0.673702E 04
	4	0.118481E-00	0.463945E 05	-0.574671E 04
	5	0.126099E-00	0.464415E 05	-0.530304E 04
	6	0.126755E-00	0.463480E 05	-0.587704E 04
	7	0.143238E-00	0.467018E 05	-0.246524E 04
	8	0.158670E-00	0.467189E 05	0.851090E 03

	9	0.156853E-00	0.467481E 05	-0.130485E 04
	10	0.151046E-00	0.466785E 05	-0.186522E 04
X= 0.46000	NO.	Y	VX	VY
	1	0.651975E-01	0.449814E 05	-0.107657E 05
	2	0.842239E-01	0.460596E 05	-0.844103E 04
	3	0.104069E-00	0.462088E 05	-0.673908E 04
	4	0.117243E-00	0.463410E 05	-0.573388E 04
	5	0.124958E-00	0.463931E 05	-0.529181E 04
	6	0.125488E-00	0.462999E 05	-0.586598E 04
	7	0.142710E-00	0.466608E 05	-0.246470E 04
	8	0.158852E-00	0.466790E 05	0.853210E 03
	9	0.156574E-00	0.467083E 05	-0.129923E 04
	10	0.150646E-00	0.466386E 05	-0.186078E 04
X= 0.47000	NO.	Y	VX	VY
	1	0.627979E-01	0.448861E 05	-0.107982E 05
	2	0.823854E-01	0.459908E 05	-0.848220E 04
	3	0.102611E-00	0.461890E 05	-0.672642E 04
	4	0.116008E-00	0.463348E 05	-0.571299E 04
	5	0.123819E-00	0.463908E 05	-0.527552E 04
	6	0.124223E-00	0.462977E 05	-0.584991E 04
	7	0.142182E-00	0.466631E 05	-0.246189E 04
	8	0.159035E-00	0.466820E 05	0.855021E 03
	9	0.156297E-00	0.467113E 05	-0.129312E 04
	10	0.150248E-00	0.466416E 05	-0.185613E 04
X= 0.48000	NO.	Y	VX	VY
	1	0.603890E-01	0.448509E 05	-0.108187E 05
	2	0.805389E-01	0.459832E 05	-0.850056E 04
	3	0.101158E-00	0.462197E 05	-0.670340E 04
	4	0.114779E-00	0.463746E 05	-0.568620E 04
	5	0.122685E-00	0.464332E 05	-0.525529E 04
	6	0.122962E-00	0.463403E 05	-0.582992E 04
	7	0.141655E-00	0.467077E 05	-0.245747E 04
	8	0.159219E-00	0.467268E 05	0.856499E 03
	9	0.156021E-00	0.467561E 05	-0.128664E 04
	10	0.149851E-00	0.466866E 05	-0.185153E 04
X= 0.49000	NO.	Y	VX	VY
	1	0.579761E-01	0.448778E 05	-0.108324E 05
	2	0.786912E-01	0.460384E 05	-0.850290E 04
	3	0.997121E-01	0.462999E 05	-0.667283E 04
	4	0.113557E-00	0.464596E 05	-0.565581E 04
	5	0.121556E-00	0.465191E 05	-0.523232E 04
	6	0.121707E-00	0.464264E 05	-0.580712E 04
	7	0.141130E-00	0.467935E 05	-0.245218E 04
	8	0.159402E-00	0.468121E 05	0.857627E 03
	9	0.155747E-00	0.468415E 05	-0.127993E 04
	10	0.149455E-00	0.467724E 05	-0.184731E 04
X= 0.50000	NO.	Y	VX	VY
	1	0.555636E-01	0.449628E 05	-0.108411E 05
	2	0.768480E-01	0.461470E 05	-0.848854E 04
	3	0.982767E-01	0.464266E 05	-0.663734E 04
	4	0.112345E-00	0.465871E 05	-0.562438E 04
	5	0.120436E-00	0.466457E 05	-0.520804E 04
	6	0.120461E-00	0.465532E 05	-0.578287E 04
	7	0.140607E-00	0.469182E 05	-0.244678E 04
	8	0.159585E-00	0.469356E 05	0.858414E 03
	9	0.155474E-00	0.469651E 05	-0.127317E 04
	10	0.149061E-00	0.468965E 05	-0.184382E 04
X= 0.51000	NO.	Y	VX	VY
	1	0.531559E-01	0.451059E 05	-0.108449E 05

	2	0.750146E-01	0.463102E 05	-0.846192E 04
	3	0.968536E-01	0.465973E 05	-0.650009E 04
	4	0.111143E-00	0.467547E 05	-0.559395E 04
	5	0.119324E-00	0.468107E 05	-0.518414E 04
	6	0.119224E-00	0.467185E 05	-0.575890E 04
	7	0.140087E-00	0.470789E 05	-0.244193E 04
	8	0.159767E-00	0.470948E 05	0.858882E 03
	9	0.155205E-00	0.471244E 05	-0.126652E 04
	10	0.148669E-00	0.470564E 05	-0.184135E 04
X= 0.52000	NO.	Y	VX	VY
	1	0.507569E-01	0.453117E 05	-0.108466E 05
	2	0.731949E-01	0.465292E 05	-0.843285E 04
	3	0.954442E-01	0.468097E 05	-0.656504E 04
	4	0.109952E-00	0.469592E 05	-0.556662E 04
	5	0.118221E-00	0.470109E 05	-0.516267E 04
	6	0.117996E-00	0.469192E 05	-0.573730E 04
	7	0.139570E-00	0.472721E 05	-0.243808E 04
	8	0.159949E-00	0.472863E 05	0.859072E 03
	9	0.154937E-00	0.473162E 05	-0.126022E 04
	10	0.148278E-00	0.472490E 05	-0.183998E 04
X= 0.53000	NO.	Y	VX	VY
	1	0.483701E-01	0.455801E 05	-0.108468E 05
	2	0.713904E-01	0.467956E 05	-0.840746E 04
	3	0.940485E-01	0.470598E 05	-0.653630E 04
	4	0.108772E-00	0.471965E 05	-0.554480E 04
	5	0.117127E-00	0.472424E 05	-0.514577E 04
	6	0.116778E-00	0.471514E 05	-0.572025E 04
	7	0.139056E-00	0.474941E 05	-0.243540E 04
	8	0.159869E-00	0.475058E 05	-0.859037E 03
	9	0.154672E-00	0.475371E 05	-0.125483E 04
	10	0.147890E-00	0.474708E 05	-0.183953E 04

RH-FIELD OF LAST CYCLE

RHS OF MATRIX EQUATION - SPACE-CHARGE DENSITY

1	1	2	3	4	5	6	7	8	0.	0.	0.	0.	0.	0.	0.	0.
1	9	10	11	12	13	14	15	16	0.	0.	0.	0.	0.	0.	0.	0.
1	17	0	0	0	0	0	0	0	0.	0.	0.	0.	0.	0.	0.	0.
2	1	2	3	4	5	6	7	8	0.	0.	0.	0.	0.	0.	0.	0.
2	9	10	11	12	13	14	15	16	0.	0.	0.	0.826	1.408	0.736	0.409	0.200
2	17	0	0	0	0	0	0	0	0.044	0.	0.	0.	0.	0.	0.	0.
3	1	2	3	4	5	6	7	8	0.	0.	0.	0.	0.	0.	0.	0.
3	9	10	11	12	13	14	15	16	0.	0.	0.665	1.147	0.731	0.474	0.284	0.140
3	17	0	0	0	0	0	0	0	0.033	0.	0.	0.	0.	0.	0.	0.
4	1	2	3	4	5	6	7	8	0.	0.	0.	0.	0.	0.	0.	0.
4	9	10	11	12	13	14	15	16	0.	0.727	1.345	0.855	0.595	0.401	0.247	0.118
4	17	0	0	0	0	0	0	0	0.030	0.	0.	0.	0.	0.	0.	0.
5	1	2	3	4	5	6	7	8	0.	0.	0.	0.	0.	0.	0.880	6.162
5	9	10	11	12	13	14	15	16	3.285	1.872	1.204	0.801	0.541	0.370	0.233	0.107
5	17	0	0	0	0	0	0	0	0.029	0.	0.	0.	0.	0.	0.	0.
6	1	2	3	4	5	6	7	8	0.	0.	0.	0.	0.	1.312	10.930	6.160
6	9	10	11	12	13	14	15	16	2.912	1.838	1.199	0.808	0.517	0.356	0.230	0.105
6	17	0	0	0	0	0	0	0	0.027	0.	0.	0.	0.	0.	0.	0.
7	1	2	3	4	5	6	7	8	0.	0.	0.	0.	0.	0.	0.	4.903
7	9	10	11	12	13	14	15	16	3.541	1.907	1.187	0.839	0.529	0.357	0.233	0.107
7	17	0	0	0	0	0	0	0	0.026	0.	0.	0.	0.	0.	0.	0.
8	1	2	3	4	5	6	7	8	0.	0.	0.	0.	0.	0.	11.952	14.202
8	9	10	11	12	13	14	15	16	3.769	2.174	1.314	0.883	0.575	0.364	0.238	0.112
8	17	0	0	0	0	0	0	0	0.025	0.	0.	0.	0.	0.	0.	0.

9	1	2	3	4	5	6	7	8	0.	0.	0.	0.	0.	0.	0.	7.381
9	9	10	11	12	13	14	15	16	9.400	2.630	1.406	0.924	0.632	0.374	0.246	0.119
9	17	0	0	0	0	0	0	0	0.025	0.	0.	0.	0.	0.	0.	0.
10	1	2	3	4	5	6	7	8	0.	0.	0.	0.	0.	0.	0.	0.
10	9	10	11	12	13	14	15	16	8.988	4.555	1.688	1.017	0.705	0.396	0.257	0.127
10	17	0	0	0	0	0	0	0	0.026	0.	0.	0.	0.	0.	0.	0.
11	1	2	3	4	5	6	7	8	0.	0.	0.	0.	0.	0.	0.	0.
11	9	10	11	12	13	14	15	16	1.964	8.059	2.116	1.108	0.750	0.449	0.270	0.139
11	17	0	0	0	0	0	0	0	0.026	0.	0.	0.	0.	0.	0.	0.
12	1	2	3	4	5	6	7	8	0.	0.	0.	0.	0.	0.	0.	0.
12	9	10	11	12	13	14	15	16	0.	7.185	2.833	1.219	0.805	0.510	0.284	0.152
12	17	0	0	0	0	0	0	0	0.027	0.	0.	0.	0.	0.	0.	0.
13	1	2	3	4	5	6	7	8	0.	0.	0.	0.	0.	0.	0.	0.
13	9	10	11	12	13	14	15	16	0.	3.630	4.507	1.627	0.871	0.580	0.302	0.164
13	17	0	0	0	0	0	0	0	0.029	0.	0.	0.	0.	0.	0.	0.
14	1	2	3	4	5	6	7	8	0.	0.	0.	0.	0.	0.	0.	0.
14	9	10	11	12	13	14	15	16	0.	0.530	6.011	1.975	0.971	0.648	0.326	0.179
14	17	0	0	0	0	0	0	0	0.030	0.	0.	0.	0.	0.	0.	0.
15	1	2	3	4	5	6	7	8	0.	0.	0.	0.	0.	0.	0.	0.
15	9	10	11	12	13	14	15	16	0.	0.	5.711	1.652	1.209	0.721	0.359	0.195
15	17	0	0	0	0	0	0	0	0.032	0.	0.	0.	0.	0.	0.	0.
16	1	2	3	4	5	6	7	8	0.	0.	0.	0.	0.	0.	0.	0.
16	9	10	11	12	13	14	15	16	0.	0.	4.909	1.385	1.507	0.792	0.415	0.213
16	17	0	0	0	0	0	0	0	0.035	0.	0.	0.	0.	0.	0.	0.
17	1	2	3	4	5	6	7	8	0.	0.	0.	0.	0.	0.	0.	0.
17	9	10	11	12	13	14	15	16	0.	0.	3.968	1.835	1.348	0.888	0.481	0.232
17	17	0	0	0	0	0	0	0	0.039	0.	0.	0.	0.	0.	0.	0.
18	1	2	3	4	5	6	7	8	0.	0.	0.	0.	0.	0.	0.	0.
18	9	10	11	12	13	14	15	16	0.	0.	3.345	2.192	0.739	1.406	0.567	0.253
18	17	0	0	0	0	0	0	0	0.043	0.	0.	0.	0.	0.	0.	0.
19	1	2	3	4	5	6	7	8	0.	0.	0.	0.	0.	0.	0.	0.
19	9	10	11	12	13	14	15	16	0.	0.	2.903	2.479	0.740	1.285	0.655	0.280
19	17	0	0	0	0	0	0	0	0.050	0.	0.	0.	0.	0.	0.	0.
20	1	2	3	4	5	6	7	8	0.	0.	0.	0.	0.	0.	0.	0.
20	9	10	11	12	13	14	15	16	0.	0.	2.689	2.602	0.734	1.101	0.809	0.316
20	17	0	0	0	0	0	0	0	0.060	0.	0.	0.	0.	0.	0.	0.
21	1	2	3	4	5	6	7	8	0.	0.	0.	0.	0.	0.	0.	0.
21	9	10	11	12	13	14	15	16	0.	0.	2.658	2.586	0.722	0.520	1.328	0.370
21	17	0	0	0	0	0	0	0	0.072	0.	0.	0.	0.	0.	0.	0.
22	1	2	3	4	5	6	7	8	0.	0.	0.	0.	0.	0.	0.	0.
22	9	10	11	12	13	14	15	16	0.	0.	2.781	2.448	0.708	0.508	1.237	0.457
22	17	0	0	0	0	0	0	0	0.086	0.	0.	0.	0.	0.	0.	0.
23	1	2	3	4	5	6	7	8	0.	0.	0.	0.	0.	0.	0.	0.
23	9	10	11	12	13	14	15	16	0.	0.	2.877	2.364	0.690	0.497	0.772	0.909
23	17	0	0	0	0	0	0	0	0.104	0.	0.	0.	0.	0.	0.	0.
24	1	2	3	4	5	6	7	8	0.	0.	0.	0.	0.	0.	0.	0.
24	9	10	11	12	13	14	15	16	0.	0.	3.035	2.249	0.670	0.485	0.449	1.212
24	17	0	0	0	0	0	0	0	0.124	0.	0.	0.	0.	0.	0.	0.
25	1	2	3	4	5	6	7	8	0.	0.	0.	0.	0.	0.	0.	0.
25	9	10	11	12	13	14	15	16	0.	0.	3.231	2.104	0.649	0.474	0.446	1.163
25	17	0	0	0	0	0	0	0	0.170	0.	0.	0.	0.	0.	0.	0.
26	1	2	3	4	5	6	7	8	0.	0.	0.	0.	0.	0.	0.	0.
26	9	10	11	12	13	14	15	16	0.	0.	3.423	1.961	0.629	0.461	0.442	0.690
26	17	0	0	0	0	0	0	0	0.634	0.	0.	0.	0.	0.	0.	0.
27	1	2	3	4	5	6	7	8	0.	0.	0.	0.	0.	0.	0.	0.
27	9	10	11	12	13	14	15	16	0.	0.225	3.400	1.803	0.614	0.447	0.437	0.200
27	17	0	0	0	0	0	0	0	1.089	0.	0.	0.	0.	0.	0.	0.
28	1	2	3	4	5	6	7	8	0.	0.	0.	0.	0.	0.	0.	0.
28	9	10	11	12	13	14	15	16	0.	0.491	3.347	1.633	0.600	0.438	0.426	0.190
28	17	0	0	0	0	0	0	0	1.082	0.	0.	0.	0.	0.	0.	0.

29	1	2	3	4	5	6	7	8	0.	0.	0.	0.	0.	0.	0.	0.
29	9	10	11	12	13	14	15	16	0.	0.840	3.220	1.457	0.580	0.436	0.415	0.570
29	17	0	0	0	0	0	0	0	0.733	0.	0.	0.	0.	0.	0.	0.
30	1	2	3	4	5	6	7	8	0.	0.	0.	0.	0.	0.	0.	0.
30	9	10	11	12	13	14	15	16	0.	1.549	2.751	1.281	0.559	0.436	0.402	1.019
30	17	0	0	0	0	0	0	0	0.274	0.	0.	0.	0.	0.	0.	0.
31	1	2	3	4	5	6	7	8	0.	0.	0.	0.	0.	0.	0.	0.
31	9	10	11	12	13	14	15	16	0.	2.102	2.452	1.109	0.533	0.438	0.473	1.042
31	17	0	0	0	0	0	0	0	0.153	0.	0.	0.	0.	0.	0.	0.
32	1	2	3	4	5	6	7	8	0.	0.	0.	0.	0.	0.	0.	0.
32	9	10	11	12	13	14	15	16	0.273	2.089	2.468	0.924	0.516	0.432	0.735	0.804
32	17	0	0	0	0	0	0	0	0.106	0.	0.	0.	0.	0.	0.	0.
33	1	2	3	4	5	6	7	8	0.	0.	0.	0.	0.	0.	0.	0.
33	9	10	11	12	13	14	15	16	0.602	1.972	2.564	0.730	0.500	0.425	0.936	0.582
33	17	0	0	0	0	0	0	0	0.102	0.	0.	0.	0.	0.	0.	0.
34	1	2	3	4	5	6	7	8	0.	0.	0.	0.	0.	0.	0.	0.
34	9	10	11	12	13	14	15	16	0.891	2.186	2.361	0.609	0.489	0.575	0.991	0.344
34	17	0	0	0	0	0	0	0	0.099	0.	0.	0.	0.	0.	0.	0.
35	1	2	3	4	5	6	7	8	0.	0.	0.	0.	0.	0.	0.	0.061
35	9	10	11	12	13	14	15	16	1.532	1.991	2.063	0.583	0.491	0.766	0.841	0.258
35	17	0	0	0	0	0	0	0	0.095	0.	0.	0.	0.	0.	0.	0.
36	1	2	3	4	5	6	7	8	0.	0.	0.	0.	0.	0.	0.	0.529
36	9	10	11	12	13	14	15	16	1.868	1.706	1.748	0.567	0.503	0.885	0.702	0.214
36	17	0	0	0	0	0	0	0	0.092	0.	0.	0.	0.	0.	0.	0.
37	1	2	3	4	5	6	7	8	0.	0.	0.	0.	0.	0.	0.	0.862
37	9	10	11	12	13	14	15	16	1.847	1.878	1.467	0.551	0.697	0.856	0.512	0.190
37	17	0	0	0	0	0	0	0	0.086	0.	0.	0.	0.	0.	0.	0.
38	1	2	3	4	5	6	7	8	0.	0.	0.	0.	0.	0.	0.021	1.180
38	9	10	11	12	13	14	15	16	1.675	2.154	1.209	0.541	0.846	0.776	0.411	0.166
38	17	0	0	0	0	0	0	0	0.081	0.	0.	0.	0.	0.	0.	0.
39	1	2	3	4	5	6	7	8	0.	0.	0.	0.	0.	0.	0.587	1.329
39	9	10	11	12	13	14	15	16	1.426	2.134	0.965	0.648	0.842	0.760	0.279	0.143
39	17	0	0	0	0	0	0	0	0.077	0.	0.	0.	0.	0.	0.	0.
40	1	2	3	4	5	6	7	8	0.	0.	0.	0.	0.	0.	0.977	1.797
40	9	10	11	12	13	14	15	16	1.100	2.005	0.752	0.824	0.763	0.571	0.206	0.134
40	17	0	0	0	0	0	0	0	0.073	0.	0.	0.	0.	0.	0.	0.
41	1	2	3	4	5	6	7	8	0.	0.	0.	0.	0.	0.350	1.005	1.654
41	9	10	11	12	13	14	15	16	1.361	1.852	0.595	0.934	0.700	0.571	0.178	0.127
41	17	0	0	0	0	0	0	0	0.070	0.	0.	0.	0.	0.	0.	0.
42	1	2	3	4	5	6	7	8	0.	0.	0.	0.	0.	0.792	0.952	1.378
42	9	10	11	12	13	14	15	16	1.714	1.590	0.776	0.828	0.628	0.498	0.160	0.120
42	17	0	0	0	0	0	0	0	0.068	0.	0.	0.	0.	0.	0.	0.
43	1	2	3	4	5	6	7	8	0.	0.	0.	0.	0.121	1.155	1.256	0.758
43	9	10	11	12	13	14	15	16	1.976	1.340	0.932	0.729	0.553	0.438	0.144	0.116
43	17	0	0	0	0	0	0	0	0.066	0.	0.	0.	0.	0.	0.	0.
44	1	2	3	4	5	6	7	8	0.	0.	0.	0.	0.648	0.884	1.565	0.718
44	9	10	11	12	13	14	15	16	1.876	1.191	0.939	0.674	0.480	0.393	0.131	0.111
44	17	0	0	0	0	0	0	0	0.064	0.	0.	0.	0.	0.	0.	0.
45	1	2	3	4	5	6	7	8	0.	0.	0.	0.072	1.109	0.456	1.557	1.102
45	9	10	11	12	13	14	15	16	1.786	1.219	0.756	0.603	0.441	0.356	0.115	0.106
45	17	0	0	0	0	0	0	0	0.062	0.	0.	0.	0.	0.	0.	0.
46	1	2	3	4	5	6	7	8	0.	0.	0.	0.674	0.885	0.829	0.898	1.460
46	9	10	11	12	13	14	15	16	1.706	1.116	0.697	0.535	0.410	0.323	0.102	0.102
46	17	0	0	0	0	0	0	0	0.060	0.	0.	0.	0.	0.	0.	0.
47	1	2	3	4	5	6	7	8	0.	0.	0.137	0.934	0.515	1.490	0.298	1.796
47	9	10	11	12	13	14	15	16	1.726	0.909	0.641	0.471	0.395	0.280	0.095	0.098
47	17	0	0	0	0	0	0	0	0.058	0.	0.	0.	0.	0.	0.	0.
48	1	2	3	4	5	6	7	8	0.	0.	0.579	0.888	0.131	1.634	0.585	1.750
48	9	10	11	12	13	14	15	16	1.715	0.720	0.588	0.419	0.496	0.131	0.089	0.094
48	17	0	0	0	0	0	0	0	0.057	0.	0.	0.	0.	0.	0.	0.

49	1	2	3	4	5	6	7	8	0.	0.342	0.628	0.637	0.664	1.041	0.947	1.762
49	9	10	11	12	13	14	15	16	1.487	0.663	0.528	0.386	0.461	0.120	0.085	0.091
49	17	0	0	0	0	0	0	0	0.055	0.	0.	0.	0.	0.	0.	0.
50	1	2	3	4	5	6	7	8	0.067	0.476	0.831	0.232	1.295	0.475	1.283	1.910
50	9	10	11	12	13	14	15	16	1.126	0.609	0.475	0.365	0.421	0.110	0.081	0.088
50	17	0	0	0	0	0	0	0	0.054	0.	0.	0.	0.	0.	0.	0.
51	1	2	3	4	5	6	7	8	0.328	0.532	0.745	0.002	1.607	0.224	1.537	1.940
51	9	10	11	12	13	14	15	16	0.831	0.569	0.426	0.346	0.389	0.098	0.077	0.086
51	17	0	0	0	0	0	0	0	0.053	0.	0.	0.	0.	0.	0.	0.
52	1	2	3	4	5	6	7	8	0.343	0.882	0.364	0.516	1.156	0.492	1.798	1.780
52	9	10	11	12	13	14	15	16	0.628	0.516	0.395	0.333	0.360	0.088	0.074	0.083
52	17	0	0	0	0	0	0	0	0.052	0.	0.	0.	0.	0.	0.	0.
53	1	2	3	4	5	6	7	8	0.269	1.230	0.057	1.130	0.632	0.817	2.011	1.339
53	9	10	11	12	13	14	15	16	0.580	0.467	0.366	0.322	0.331	0.080	0.072	0.081
53	17	0	0	0	0	0	0	0	0.049	0.	0.	0.	0.	0.	0.	0.
54	1	2	3	4	5	6	7	8	0.523	0.757	0.166	1.598	0.251	1.258	1.858	1.121
54	9	10	11	12	13	14	15	16	0.546	0.425	0.340	0.312	0.303	0.073	0.070	0.082
54	17	0	0	0	0	0	0	0	0.045	0.	0.	0.	0.	0.	0.	0.
55	1	2	3	4	5	6	7	8	0.	0.	0.	0.	0.	0.	0.	0.
55	9	10	11	12	13	14	15	16	0.	0.	0.	0.	0.	0.	0.	0.
55	17	0	0	0	0	0	0	0	0.	0.	0.	0.	0.	0.	0.	0.

EMITTER CURRENT IN TUBES
1 0.720298E-03 2 0.186652E-03 3 0.940209E-04 4 0.582407E-04 5 0.391668E-04 6 0.270023E-04 7 0.179885E-04
8 0.110425E-04 9 0.527475E-05 10 0.634128E-06
TOTAL EMITTER CURRENT 0.116032E-02
END OF PROBLEM

III. COMPUTER PROGRAM FOR SPECTRAL RADIUS CALCULATION (XR-CALCULATION)

The subroutines used for these calculations are:

1. MAIN ØNE

   Same as before, but it calls MATIN only.

2. MATIN

   Calculates the largest eigenvalue.

3. MATRIX

   Same as before.

4. 7090 PLØTTING RØUTINES (Fortran II) for the CalComp Plotter (Stanford University Computation Center Library Program No. 157).

A. DATA INPUT

The Data Input for this calculation is the same as for the beam analysis program with an additional card at the end shown on page 50 of Data Output by arrow. This card indicates how many iterations (MIT = 100) to perform and whether the print-out for each interation is required (KWR > 0).

B. DATA OUTPUT

The print-out of Data Output consists of the Data Input (pages 48 to 50) and then the LØW and HIGH eigenvalues for the first two iterations. The last two columns show the point numbers where the lowest and the highest eigenvalue, respectively, were found. At the end the square root mean value of XR is given (page 51).

DATA OUTPUT PRINT-OUT BY THE COMPUTER

```
        DEFLECTING PLATES FOR ION ENGINE NO.1                                08/02/65
        NASA-LEWIS  FOR  F.KAVANAGH/S.JONES

 NXF  NYF  NEM  NTJ NDIM  NRL  NUL NURLNCOOR IDEC  NFUL  NCO KRHX KRHY
  55   17    8   10    3    2   45   45    0   -1     0   14    2   17

 IXONSPANNPOTXNPOTY  YAXS
   1   13    5   17   0.0

KRTN KRTX KRTY KRTX KRTY KRTX KRTY
   1    2   17
   VAT        VBT       SIZE        VA         VB         VC
2000.0000  500.0000  500.0000 2100.0000    -0.        8.0000
   HGH       XLOW      HSL        XLSL       VD
  -0.        0.0800    -0.        -0.       20.0000
   AXX       BXX       CXX        DXX        XR
   0.2800    0.3200    0.5400     0.5400     0.9804
     RO          EPSILON          XEMIT       MESH SIZE - H
   0.             0.01000000      0.13999999     0.01000000
          EPSNOT       XQM       ATOM       VTH        VTHX       VTHY
        .88540E-11.95790E 08.13290E 03.          .          .

          CATHODE  COORDINATES
   0.0600    0.0440    0.0500    0.0520    0.0400    0.0620
   0.0250    0.0800    0.0140    0.1000    0.0060    0.1200
   0.0020    0.1400   -0.        0.1600

          PRINT-OUT OF CYCLE NO.
  -0   -0   -0   -0   -0   -0   -0   -0   -0   -0

 VOLT-1       -2         -3         -4         -5         -6         -7
2100.0000    0.         0.       500.0000 2000.0000 1800.0000 1600.0000
1400.0000 1200.0000 1000.0000  800.0000  600.0000  400.0000  200.0000
 100.0000   50.0000   -0.        -0.        -0.        -0.        -0.
  -0.       -0.       -0.        -0.        -0.        -0.        -0.

     BOUNDARY POINTS OF ELECTRODE SHAPE
1000   2  12-0.100 0.200     1   -0  -0
0000   2  13-0.400-0.        1   -0  -0
0000   2  14-0.650-0.        1   -0  -0
0000   2  15-0.800-0.        1   -0  -0
0000   2  16-0.950-0.        1   -0  -0
2000   2  17-1.000-0.        1   -0  -0
1000   3  10-0.150 0.300     1   -0  -0
0000   3  11-0.700-0.        1   -0  -0
1000   4   9-0.500 0.700     1   -0  -0
1000   5   8-0.750 0.800     1   -0  -0
1000   6   7-0.900 0.800     1   -0  -0
1230   7   1-0.    -0.       1   -0  -0
0300   7   2-0.    -0.       1   -0  -0
0300   7   3-0.    -0.       1   -0  -0
2300   7   4-0.    -1.000    1   -0  -0
1000   7   6-0.700 0.500     1   -0  -0
1200   8   1-0.    -0.       1   -0  -0
1200   9   1-0.    -0.       1   -0  -0
1200  10   1-0.    -0.       7   -0  -0
1200  11   1-0.    -0.       9   -0  -0
1200  12   1-0.    -0.      11   -0  -0
1200  13   1-0.    -0.      13   -0  -0
1200  14   1-0.    -0.       2   -0  -0
```

```
1200  15   1-0.    -0.        2   -0   -0
1200  16   1 1.000-0.        2   -0   -0
0000  16   2 1.000-0.        2   -0   -0
0000  16   3 1.000-0.        2   -0   -0
0000  16   4 1.000-0.        2   -0   -0
0000  16   5 1.000-0.        2   -0   -0
0000  16   6 1.000-0.        2   -0   -0
0000  16   7 1.000-0.        2   -0   -0
0000  16   8 1.000-0.        2   -0   -0
0000  16   9 1.000-0.        2   -0   -0
0000  16  10 1.000-0.        2   -0   -0
1000  17  11-0.     1.000     2   -0   -0
1000  18  11-0.     1.000     2   -0   -0
1000  19  11-0.     1.000     2   -0   -0
1000  20  11-0.     1.000     2   -0   -0
1000  21  11-0.     1.000     2   -0   -0
1000  22  11-0.     1.000     2   -0   -0
1000  23  11-0.     1.000     2   -0   -0
1200  24   1-1.000-0.        2   -0   -0
0000  24   2-1.000-0.        2   -0   -0
0000  24   3-1.000-0.        2   -0   -0
0000  24   4-1.000-0.        2   -0   -0
0000  24   5-1.000-0.        2   -0   -0
0000  24   6-1.000-0.        2   -0   -0
0000  24   7-1.000-0.        2   -0   -0
0000  24   8-1.000-0.        2   -0   -0
0000  24   9-1.000-0.        2   -0   -0
0000  24  10-1.000-0.        2   -0   -0
1200  25   1-0.    -0.        2   -0   -0
1200  26   1-0.    -0.        2   -0   -0
1200  27   1-0.    -0.        3   -0   -0
1200  28   1 1.000-0.        3   -0   -0
0000  28   2 1.000-0.        3   -0   -0
0000  28   3 1.000-0.        3   -0   -0
0000  28   4 1.000-0.        3   -0   -0
0000  28   5 1.000-0.        3   -0   -0
0000  28   6 1.000-0.        3   -0   -0
0000  28   7 1.000-0.        3   -0   -0
0000  28   8 1.000-0.        3   -0   -0
0000  28   9 1.000-0.        3   -0   -0
1000  29  10-0.     1.000     3   -0   -0
1000  30  10-0.     1.000     3   -0   -0
1000  31  10-0.     1.000     3   -0   -0
1000  32  10-0.     1.000     3   -0   -0
1000  33  10-0.     1.000     3   -0   -0
1200  34   1-1.000-0.        3   -0   -0
0000  34   2-1.000-0.        3   -0   -0
0000  34   3-1.000-0.        3   -0   -0
0000  34   4-1.000-0.        3   -0   -0
0000  34   5-1.000-0.        3   -0   -0
0000  34   6-1.000-0.        3   -0   -0
0000  34   7-1.000-0.        3   -0   -0
0000  34   8-1.000-0.        3   -0   -0
0000  34   9-1.000-0.        3   -0   -0
1200  35   1-0.    -0.        3   -0   -0
1200  36   1-0.    -0.        3   -0   -0
1200  37   1-0.    -0.        3   -0   -0
1200  38   1-0.    -0.        3   -0   -0
1200  39   1-0.    -0.        3   -0   -0
1200  40   1-0.    -0.        3   -0   -0
```

```
1200  41   1-0.    -0.        3   -0  -0
1200  42   1-0.    -0.        3   -0  -0
1200  43   1-0.    -0.        3   -0  -0
1200  44   1-0.    -0.        3   -0  -0
1200  45   1-0.    -0.        3   -0  -0
1200  46   1-0.    -0.        3   -0  -0
1200  47   1-0.    -0.        3   -0  -0
1200  48   1-0.    -0.        3   -0  -0
1200  49   1-0.    -0.        3   -0  -0
1200  50   1-0.    -0.        3   -0  -0
1200  51   1-0.    -0.        3   -0  -0
1200  52   1-0.    -0.        3   -0  -0
1200  53   1-0.    -0.        3   -0  -0
1200  54   1-0.    -0.        3   -0  -0
1200  55   1 1.000-0.        4   -0  -0
0000  55   2 1.000-0.        4   -0  -0
0000  55   3 1.000-0.        4   -0  -0
0000  55   4 1.000-0.        4   -0  -0
0000  55   5 1.000-0.        4   -0  -0
0000  55   6 1.000-0.        4   -0  -0
0000  55   7 1.000-0.        4   -0  -0
0000  55   8 1.000-0.        4   -0  -0
0000  55   9 1.000-0.        4   -0  -0
0000  55  10 1.000-0.        4   -0  -0
0000  55  11 1.000-0.        4   -0  -0
0000  55  12 1.000-0.        4   -0  -0
0000  55  13 1.000-0.        4   -0  -0
0000  55  14 1.000-0.        4   -0  -0
0000  55  15 1.000-0.        4   -0  -0
0000  55  16 1.000-0.        4   -0  -0
2000  55  17 1.000-0.        4   -0   1
 100     1
   LOW    HIGH          2   0.06241877   0.99999999        29   154
   LOW    HIGH          4   0.53020603   0.99999996        29   188
   LOW    HIGH          6   0.73457834   0.99999996        29   664
   LOW    HIGH          8   0.75031348   0.99999996       392   701
   LOW    HIGH         10   0.75074767   0.99999996       392   734
   LOW    HIGH         12   0.75144236   0.99970973       392   731
   LOW    HIGH         14   0.75244007   0.99916768       392   731
   LOW    HIGH         16   0.75377956   0.99830127       392   731
   LOW    HIGH         18   0.75550042   0.99719535       392   731
   LOW    HIGH         20   0.75764639   0.99595493       392   731
   LOW    HIGH         22   0.76026683   0.99466971       392   731
   LOW    HIGH         24   0.76341622   0.99340408       392   731
   LOW    HIGH         26   0.76715223   0.99219910       392   731
   LOW    HIGH         28   0.77153189   0.99107761       392   731
   LOW    HIGH         30   0.77660624   0.99006657       392   748
   LOW    HIGH         32   0.78241381   0.98917856       392   748
   LOW    HIGH         34   0.78897274   0.98837800       392   748
   LOW    HIGH         36   0.79627310   0.98765965       392   748
   LOW    HIGH         38   0.80426996   0.98701709       392   748
   LOW    HIGH         40   0.81287961   0.98644357       392   748
   LOW    HIGH         42   0.82197937   0.98593245       392   748
   LOW    HIGH         44   0.83141293   0.98547738       392   748
   LOW    HIGH         46   0.84100071   0.98507245       392   748
   LOW    HIGH         48   0.85055389   0.98471230       392   748
   LOW    HIGH         50   0.85989034   0.98439204       392   748
   LOW    HIGH         52   0.86884899   0.98410731       392   748
   LOW    HIGH         54   0.87730087   0.98385420       392   748
   LOW    HIGH         56   0.88515513   0.98362923       392   748
```

LOW	HIGH	58	0.89235988	0.98342929	392	748
LOW	HIGH	60	0.89889881	0.98328237	392	782
LOW	HIGH	62	0.90478495	0.98315969	392	782
LOW	HIGH	64	0.91005322	0.98304868	392	782
LOW	HIGH	66	0.91475304	0.98294814	392	782
LOW	HIGH	68	0.91894164	0.98285712	392	782
LOW	HIGH	70	0.92267898	0.98277467	392	782
LOW	HIGH	72	0.92602389	0.98269998	392	782
LOW	HIGH	74	0.92903145	0.98263233	392	782
LOW	HIGH	76	0.93175158	0.98257105	392	782
LOW	HIGH	78	0.93422838	0.98252056	392	816
LOW	HIGH	80	0.93649992	0.98248880	392	816
LOW	HIGH	82	0.93859853	0.98245867	392	816
LOW	HIGH	84	0.94055128	0.98243012	392	816
LOW	HIGH	86	0.94238053	0.98240314	392	816
LOW	HIGH	88	0.94296780	0.98237771	323	816
LOW	HIGH	90	0.94326138	0.98236138	323	850
LOW	HIGH	92	0.94353233	0.98234868	306	850
LOW	HIGH	94	0.94372708	0.98233570	306	850
LOW	HIGH	96	0.94388814	0.98232382	289	884
LOW	HIGH	98	0.94401705	0.98231713	289	884
LOW	HIGH	100	0.94414704	0.98230983	289	918

XR =0.98144202

END OF PROBLEM

APPENDIX A

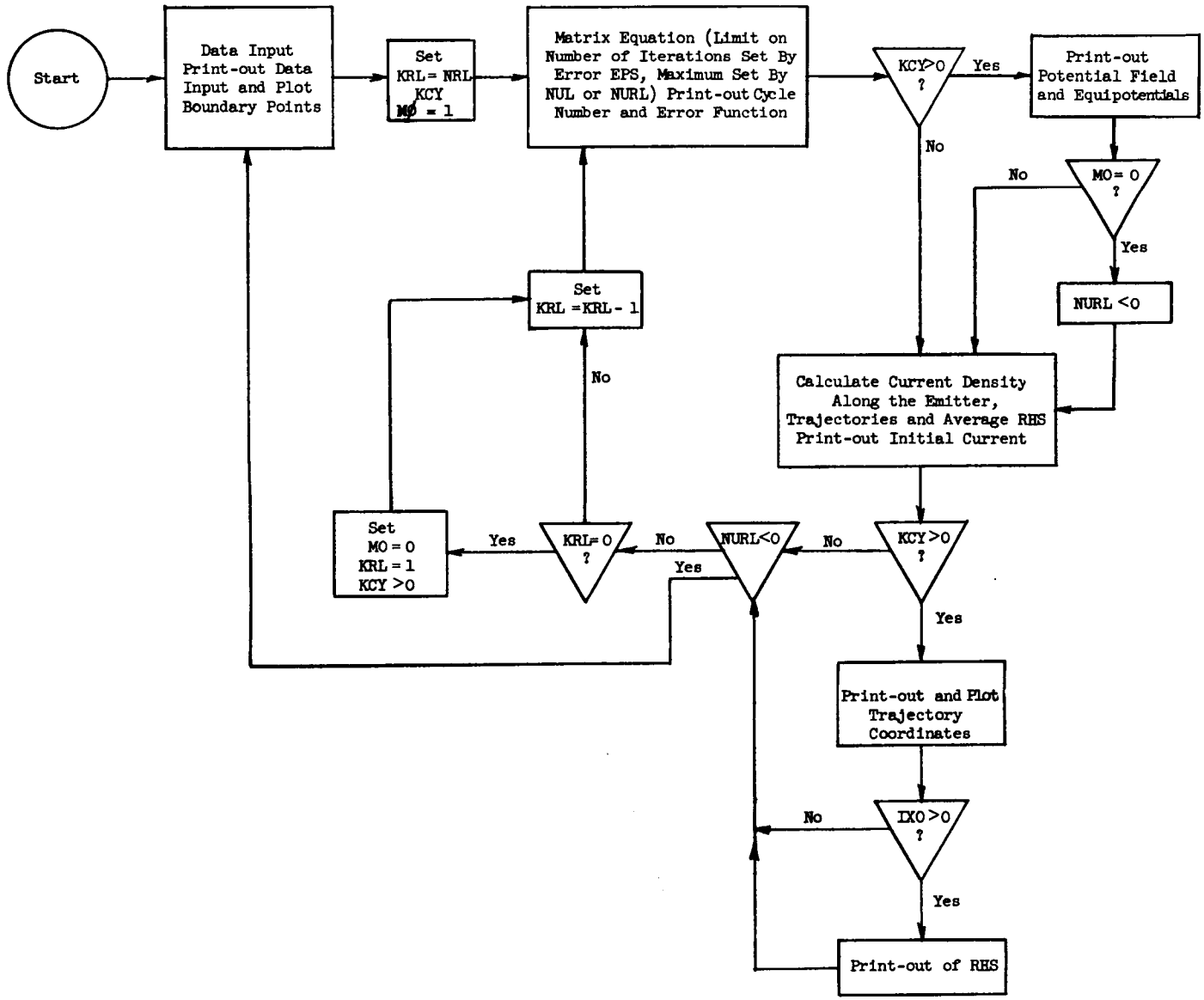

Flow chart for beam analysis program

```
CSPACE-CHARGE SOLUTION.VLAD HAMZA MICROWAVE LABORATORY.
      COMMON URH,UB,JT,RH,U,XT,KT,LINC,XR,NTOP,NUL,NLIN,ARCL,EQX,EQY,
     1   NPIT,XEP,NXEP,CU,LINC1,AX,AY,VX,VY,DX,DELY,YEP,XQM,H,KISW,ETX,
     2   ETY,PTY,PTX,NAJ,NTJ,VA,VB,VC,NCOOR,KCH,HSL,XLSL,EPS,NPUT,
     3   IDEC,JUT,NSPAN,RX,NRL,KRL,KRH,VAT,VBT,SIZE,KRT,RHUP,RHDOWN,
     4   XCU,NUT,MO,KCY,NSWP,ATX,ATY,LINC2,NXF,NYF,NURL,NJOT,XEMIT,
     5   IXU,HGH,XLOW,XMPR,NEM,A,X,JDY,AXX,BXX,CXX,DXX,NDIM,VD,VTH,
     6   VTHX,VTHY, YAXS, NFUL
         DIMENSION KRT(2),JT(4000),RH(4000),
     1   U(4000),XT(4000),KT(5),LINC(150),LINC1(150),LINC2(150),
     2   A(180),X(60),CU(40),VX(40),VY(40),KCH(40),AX(40),AY(40),
     3   ATX(40),ATY(40),ETX(40),ETY(40),XCU(40),KCY(10),PTX(60),
     4   PTY(60)
         DIMENSION ND(3),KRTX(10),KRTY(10),WOLT(28)
 200  MO=1
      READ INPUT TAPE 5,100,NH
      DO 13 J=1,NH
      READ INPUT TAPE 5,107
 13   WRITE OUTPUT TAPE 6,107
         READ INPUT TAPE 5,100,NXF,NYF,NEM,NTJ,NDIM,NRL,NUL,NURL,
     1NCOOR, IDEC, NFUL, NCO, KRHX, KRHY
      JDY = NYF
         WRITE OUTPUT TAPE  6,108
 108  FORMAT(5H0 NXF,5H  NYF,5H  NEM,5H  NTJ,5H NDIM,5H  NRL,5H  NUL,
     15H NURL,5HNCOOR,5H IDEC,5H NFUL,5H  NCU,5H KRHX,5H KRHY)
         WRITE OUTPUT TAPE 6,310,NXF,NYF,NEM,NTJ,NDIM,NRL,NUL,NURL,
     1   NCOOR,IDEC,NFUL, NCO, KRHX, KRHY
         READ INPUT TAPE 5,300,IXU,NSPAN,NPUTX,NPUTY, YAXS
         WRITE OUTPUT TAPE  6,109
 109  FORMAT(5H0 IXU,5HNSPAN,5HNPUTX,5HNPUTY, 8H    YAXS)
         WRITE OUTPUT TAPE 6,311,IXU,NSPAN,NPUTX,NPUTY, YAXS
         READ INPUT TAPE 5,100,NRTN,(KRTX(K),KRTY(K),K=1,NRTN)
         WRITE OUTPUT TAPE  6,110
 110  FORMAT(5H0KRTN,5H KRTX,5H KRTY,5H KRTX,5H KRTY,5H KRTX,5H KRTY)
         WRITE OUTPUT TAPE 6,310,NRTN,(KRTX(K),KRTY(K),K=1,NRTN)
      READ INPUT TAPE 5,102,VAT,VBT,SIZE,VA,VB,VC
         WRITE OUTPUT TAPE  6,111
 111  FORMAT(4X3HVAT,7X3HVBT,6X4HSIZE,7X2HVA,8X2HVB,8X2HVC)
      WRITE OUTPUT TAPE 6,302,VAT,VBT,SIZE,VA,VB,VC
      READ INPUT TAPE 5,102,HGH,XLOW,HSL,XLSL,VD
         WRITE OUTPUT TAPE  6,112
 112  FORMAT(4X3HHGH,6X4HXLOW,6X3HHSL,7X4HXLSL,7X2HVD)
      WRITE OUTPUT TAPE 6,302,HGH,XLOW,HSL,XLSL,VD
      READ INPUT TAPE 5,102,AXX,BXX,CXX,DXX,XR
         WRITE OUTPUT TAPE  6,113
 113  FORMAT(4X3HAXX,7X3HBXX,7X3HCXX,7X3HDXX,7X2HXR)
      WRITE OUTPUT TAPE 6,302,AXX,BXX,CXX,DXX,XR
      READ INPUT TAPE 5,8,RO,EPS,XEMIT,H
         WRITE OUTPUT TAPE  6,114
 114  FORMAT(7X2HRO,10X7HEPSILON,9X5HXEMIT,6X13HMESH SIZE - H)
      WRITE OUTPUT TAPE 6, 308, RO, EPS, XEMIT,H
      READ INPUT TAPE 5,105,YEP,XQM,ATOM,VTH,VTHX,VTHY
         WRITE OUTPUT TAPE  6,115
 115  FORMAT(12X6HEPSNUT,6X3HXQM,6X4HATOM,6X3HVTH,7X4HVTHX,6X4HVTHY)
      WRITE OUTPUT TAPE 6,105,YEP,XQM,ATOM,VTH,VTHX,VTHY
```

```
      READ INPUT TAPE 5,102,(ATX(J),ATY(J),J=1,NEM)
         WRITE OUTPUT TAPE 6,119
119   FORMAT(31H0            CATHODE  COORDINATES)
      WRITE OUTPUT TAPE 6,302,(ATX(J),ATY(J),J=1,NEM)
      READ INPUT TAPE 5,100,(KCY(J),J=1,10)
         WRITE OUTPUT TAPE 6,120
120   FORMAT(33H0            PRINT-OUT OF CYCLE NO.)
      WRITE OUTPUT TAPE 6,100,(KCY(J),J=1,10)
      READ INPUT TAPE 5,104,(WOLT(NN),NN=1,28)
         WRITE OUTPUT TAPE  6,116
116   FORMAT(8H0 VOLT-1,7X2H-2,8X2H-3,8X2H-4,8X2H-5,8X2H-6,8X2H-7)
      WRITE OUTPUT TAPE 6,304,(WOLT(NN),NN=1,28)
      HH=H**2                                                          E25
      HT=.5*H
      H2=2.*H
      XMPR=.5*(FLOATF(NXF*NYF))**2/FLOATF(NXF**2+NYF**2)
      XQM=XQM/ATOM
         RX = H/YEP
      J=1
      IF (NDIM-2) 1001,1001,2005
1001  DO 1002 I=1,NYF
         IF (I-1) 1006,1006,1007
1006     XT(J+3) = 0.0
         XT(J+5) = -0.5
         GO TO 1008
1007     IF (I-NYF) 1003,1005,1003
1005     XT(J+3) = -0.5
         XT(J+5) = 0.0
       GO TO  1008
1003     XT(J+3) = -0.25
         XT(J+5) = -0.25
1008     XT(J)   = 0.25
         XT(J+1) = 0.25
         XT(J+2) = 0.25
         XT(J+4) = 1.0
1002     J = J+6
      GO TO 2011
2005  DO 2010 I=1,NYF
      RP= FLOATF(NYF-I)*H+RO
         IF (I-1) 1009,1009,1010
1009     XT(J+3) = 0.0
         XT(J+5) = -2.0*RP
         GO TO 1011
1010     IF (RP) 2009,2008,2009
2009     XT(J+5) = -(RP-HT)
         XT(J+3) = -(RP+HT)
1011     XT(J)   = 1.0
         XT(J+1) = RP
         XT(J+2) = RP
         XT(J+4) = 4.0*RP
      GO TO 2010
2008  XT(J)= .125
      XT(J+1)=.125* H
      XT(J+2)=.125*H
      XT(J+3)=-.50    * H
      XT(J+4)=.75 *H
```

```
      XT(J+5)=0.                                                        71A
2010     J = J + 6
2011 NDD = 1
      NSS=2
      NTRIP=0
      NPONT=NYF
      KRH=(KRHX-1)*NPONT+KRHY
      NTOP=NPONT*NXF
      KRT(1)=NRTN
      I=2
      DO 2 K=1,NRTN
      KRT(I)=(KRTX(K)-1)*NPONT+KRTY(K)
    2 I=I+1
      KT(1)=-NPONT                                                      S77
      KT(2)=NPONT                                                       S78
      KT(3)=-1                                                          S79
      KT(4)=0                                                           S80
      KT(5)=+1                                                          S81
         WRITE OUTPUT TAPE 6,117
117      FORMAT(41H0     BOUNDARY POINTS OF ELECTRODE SHAPE )
         CALL PLOT (0.0,VC,-3)
      DO 2020 NX=1,NXF
      DO 2020 NY=1,NYF
      IF (NTRIP) 2030,2040,2030
2040 READ INPUT TAPE 5,2035,NS,(ND(I),I=1,3),NXC,NYC,HEW,HNS,NVOLT,
     1   NVOLT1,NCHECK
2035     FORMAT (1H 4I1,2I4,2F6.3,2I5,I4)
      WRITE OUTPUT TAPE 6,2035,NS,(ND(I),I=1,3),NXC,NYC,HEW,HNS,NVOLT,
     1   NVOLT1,NCHECK
         IF (HNS) 2031, 2032, 2031
2031     XXX=FLOATF(NXC-1)*H*VD
         YYY=-(FLOATF(NYC-1)-HNS)*H*VD
         CALL SYMBOL (XXX,YYY,0.07, 12,0.0,1)
2032     IF (HEW) 2033, 2034, 2033
2033     XXX=(FLOATF(NXC-1)+HEW)*H*VD
         YYY=-FLOATF(NYC-1)*H*VD
         CALL SYMBOL (XXX,YYY,0.07, 12,0.0,1)
         GO TO  2036
2034     IF (HNS) 2036, 2037, 2036
2037     XXX=FLOATF(NXC-1)*H*VD
         YYY=-FLOATF(NYC-1)*H*VD
         CALL SYMBOL (XXX,YYY,0.07, 12,0.0,1)
2036     NTRIP = 1
      KC=  NPONT*(NXC-1)+NYC
2030 K=   NPONT*(NX-1)+NY
      IF (K-KC) 2060,2050,2060
2060 IF (NSS-1) 2070,2070,2080
2070     IF (NY-NYF) 2071,2072,2071
2072     NSS = 2
         JT(K) = 1 + 6*(NY-1)
         VOLT1= FLOATF((NXF-NX)/NXF)*VA
         GO TO 2310
2071     JT(K) = 1 + 6*(NY-1)
      GO TO 2020
2080     JT(K) = 9999
      IF (NX-NCO) 2081,2020,2020
```

```
2081     IF (U(K)) 2020,2084,2020
2084     U(K) = VA
      GO TO  2020
2050 NTRIP = 0
      NSS=NS
      VOLT = WOLT(NVOLT)
         VOLT1 = WOLT(NVOLT1)
         HEW = HEW*H
         HNS=HNS*H
         IF (ND(3)) 2052,2052,2053
2052     VOLT1 = VOLT
2053     HN =  H
      HS     = H
      HE     = H
      HW     = H
      KE = K+NPONT
      KW = K-NPONT
      KN=K-1
      KS=K+1
      JT(K)=J
      IF (HEW) 2090,2200,2100
2090     HW = - HEW
      U(KW)    = VOLT
      GO TO 2200
2100     HE = HEW
      U(KE)    = VOLT
2200 IF (HNS) 2210,2230,2220
2210     HS = - HNS
      U(KS)    = VOLT1
      GO TO 2230
2220     HN = HNS
      U(KN)    = VOLT1
2230 IF (NDIM-2) 1004,1004,2239
1004 XT(J) = ((HN+HS)*(HE+HW))/(16.*HH)
      XT(J+1) = (HN+HS)/(8.*HW)
      XT(J+2) =  (HN+HS)/(8.*HE)
      XT(J+3) = -(HE+HW)/(8.*HN)
      XT(J+5) = - (HE+HW)/(8.*HS)
      XT(J+4) = XT(J+1)+XT(J+2)-XT(J+3)-XT(J+5)
      GO TO 2233
2239 RP=  (FLOATF(NPONT-NY))*H+RO
      IF(RP)2231,2232,2231                                              134
2231 XT(J)= (HE+HW)*(HN+HS)/(4.*HH)
      XT(J+1)=((HN+HS)/(2.*HW))*(RP+((HN-HS)/4.))                       135A
      XT(J+2)=HW*XT(J+1)/HE
      XT(J+3)=-((HW+HE)/(2.*HN))*(RP+(HN/2.))
      XT(J+5)=-((HW+HE)/(2.*HS))*(RP-(HS/2.))
      XT(J+4)=XT(J+1)+XT(J+2)-XT(J+3)-XT(J+5)
      GO TO 2233                                                        141A
2232 XT(J)= (HE+HW)*(HN/(16.*HH) )
      XT(J+1)=(HN/(8.*HW) )*H
      XT(J+2) = H* HN/(8.*HE)
      XT(J+3) = - H*(HE+HW)/(4.*HN)
      XT(J+4)=(HN/8.* ((HW+HE)/(HW*HE))+(HE+HW)/(4.*HN) )*H
      XT(J+5)=-0.
2233 DO 2300 I=1,2                                                      141
```

```
      NDA= ND(I)+1
      GO TO (2300,2240,2250,2260,2270),NDA
2240  XT(J+1) = XT(J+1)+ XT(J+2)
      XT(J+2) = 0.0
         GO TO 2300
2250  XT(J+5) = XT(J+5) +XT(J+3)
      XT(J+3) = 0.0
         GO TO 2300
2260  XT(J+2) =XT(J+2) +XT(J+1)
      XT(J+1) =0.0
         GO TO 2300
2270  XT(J+3) =XT(J+3) +XT(J+5)
      XT(J+5) =0.0
2300  CONTINUE
         IF (ND(3)) 2310,2310,2311
2311     XT(J) = 0.25
         XT(J+1) = 0.
         XT(J+2) = XLSL
         XT(J+3) = 0.
         XT(J+4) = 1.
         XT(J+5) = XLSL - 1.
2310  IF (NSS-1) 2320,2330,2340
2330  LINC1(NDD)=K
      VUP        = VOLT1
      XT(J+3)    =-XT(J+3)
      GO TO 2320
2340  LINC2(NDD)=K
      LINC (NDD)= 2*XMODF(NX,2) -1
      VDOWN      = VOLT1
      KB=LINC1(NDD)
      DO 2350 KK=KB,K
2350  U(KK)= VUP +(VDOWN-VUP)*FLOATF(KK-KB)/FLOATF(K-KB)
      XT(J+5)= -XT(J+5)
      NDD=NDD+1
2320     J = J + 6
2020  CONTINUE
      NLIN=NDD-1
      IF (NCHECK - 1) 4000,502,4000
4000  WRITE OUTPUT TAPE 6,4001
4001  FORMAT (24HOERROR IN BOUNDARY POINT)
      CALL EXIT
502   WRITE OUTPUT TAPE 6,118
118   FORMAT(20X20HTHIS ENDS DATA CARDS)
24    DO 6   J=1,NTOP
6        RH(J)=0.
      NPOT=(NPOTX-1)*NPONT+NPOTY
         IF(NCOOR) 10,10,11
11       DO 12 J=1,NEM
         ETX(J)=ATX(J)
12       ETY(J)=ATY(J)
      GO TO 15
10    DO 14 J=1,40
      ETX(J)=0.
      ETY(J)=0.
14    CONTINUE
15       KRL=NRL
```

MAIN ONE -DATA INPUT

```
C UCAL SOLVES THE MATRIX EQUATION
 25       CALL UCAL
C MNTRI CALCULATES THE RHS AND TRAJECTORIES
 26       CALL MNTRI
          GO TO 200
    8 FORMAT (4F15.8)
 100      FORMAT(14I5)
 101      FORMAT(6I5)
 102      FORMAT(6F10.4)
 103      FORMAT(13I5)
 104      FORMAT(7F10.4)
 105  FORMAT(10X6E10.5)
 106      FORMAT(3F10.5)
 107      FORMAT(72H
     1
  300 FORMAT(4I5, F10.6)
  307 FORMAT(1H 6F10.4)
  304 FORMAT(1H 7F10.4)
  308 FORMAT(1H 4F15.8)
  310 FORMAT(1H 14I5)
  311 FORMAT(1H 4I5, F10.6)
      END(1,0,0,0,0,0,1,0,0,0,0,0,0,0,0)
```

ARC CALCULATES THE BEGINNING TRAJECTORY COORDINATES

```
      SUBROUTINE ARC
CSPACE-CHARGE SOLUTION.VLAD HAMZA MICROWAVE LABORATORY.
      COMMON URH,UB,JT,RH,U,XT,KT,LINC,XR,NTOP,NUL,NLIN,ARCL,EQX,EQY,
     1   NPIT,XEP,NXEP,CU,LINC1,AX,AY,VX,VY,DX,DELY,YEP,XQM,H,KISW,ETX,
     2   ETY,PTY,PTX,NAJ,NTJ,VA,VB,VC,NCOOR,KCH,HSL,XLSL,EPS,NPOT,
     3   IDEC,JOT,NSPAN,RX,NRL,KRL,KRH,VAT,VBT,SIZE,KRT,RHUP,RHDOWN,
     4   XCU,NOT,MO,KCY,NSWP,ATX,ATY,LINC2,NXF,NYF,NURL,NJOT,XEMIT,
     5   IXO,HGH,XLOW,XMPR,NEM,A,X,JDY,AXX,BXX,CXX,DXX,NDIM,VD,VTH,
     6   VTHX,VTHY, YAXS, NFUL
      DIMENSION KRT(2),JT(4000),RH(4000),
     1   U(4000),XT(4000),KT(5),LINC(150),LINC1(150),LINC2(150),
     2   A(180),X(60),CU(40),VX(40),VY(40),KCH(40),AX(40),AY(40),
     3   ATX(40),ATY(40),ETX(40),ETY(40),XCU(40),KCY(10),PTX(60),
     4   PTY(60)
      SUM=0.
      DO 1 J=2,NEM
1     SUM=SUM+SQRTF((ATX(J)-ATX(J-1))**2+(ATY(J)-ATY(J-1))**2)
      IF (NFUL) 15,15,20
   15 ARCL = FLOATF(NTJ) - 0.5
      GO TO 30
   20 ARCL = FLOATF(NTJ) - 1.0
   30 ARCL=SUM/ARCL
      ETX(1)=ATX(1)
      ETY(1)=ATY(1)
      HYP=ARCL
      K=1
      J=1
10    IF(K-NTJ)3,6,6
3     K=K+1
2     XDIF=ATX(J)-ATX(J+1)
      YDIF=ATY(J+1)-ATY(J)
      SA=SQRTF(XDIF**2+YDIF**2)
      IF(HYP-SA) 4,4,5
4     CSA=YDIF/SA
      SNA=XDIF/SA
      ETX(K)=ATX(J)-HYP*SNA
      ETY(K)=ATY(J)+HYP*CSA
      HYP=ARCL+HYP
      GO TO 10
5     HYP= HYP-SA
      J=J+1
      GO TO 2
6     K=K+1
      NN=NTJ + 1
      ETX(K)=ATX(NEM)
      ETY(K)=ATY(NEM)
7     WRITE OUTPUT TAPE 6,103,SUM,ARCL
      WRITE OUTPUT TAPE 6,100,(J,ATX(J),ATY(J),J=1,NEM)
      WRITE OUTPUT TAPE 6,102,(J,ETX(J),ETY(J),J=1,NN)
8     CONTINUE
100   FORMAT (12H0X,Y-EMITTER /(7(1H ,I2,2H (F5.3,1H,F5.3,2H)  )))
102   FORMAT (16H0X,Y-BEGIN TRAJ. /(7(1H ,I2,2H (F5.3,1H,F5.3,2H) )))
103   FORMAT(22H0ARC,DELTA ARC LENGTH   2F10.5)
      RETURN
      END(1,0,0,0,0,0,1,0,0,0,0,0,0,0,0)
```

CALR CALCULATES RHS

```
      SUBROUTINE CALR(KE,KED)
CSPACE-CHARGE SOLUTION.VLAD HAMZA MICROWAVE LABORATORY.
      COMMON URH,UB,JT,RH,U,XT,KT,LINC,XR,NTOP,NUL,NLIN,ARCL,EQX,EQY,
     1   NPIT,XEP,NXEP,CU,LINC1,AX,AY,VX,VY,DX,DELY,YEP,XQM,H,KISW,ETX,
     2   ETY,PTY,PTX,NAJ,NTJ,VA,VB,VC,NCOOR,KCH,HSL,XLSL,EPS,NPOT,
     3   IDEC,JOT,NSPAN,RX,NRL,KRL,KRH,VAT,VBT,SIZE,KRT,RHUP,RHDOWN,
     4   XCU,NOT,MO,KCY,NSWP,ATX,ATY,LINC2,NXF,NYF,NURL,NJOT,XEMIT,
     5   IXO,HGH,XLOW,XMPR,NEM,A,X,JDY,AXX,BXX,CXX,DXX,NDIM,VD,VTH,
     6   VTHX,VTHY, YAXS, NFUL
         DIMENSION KRT(2),JT(4000),RH(4000),
     1   U(4000),XT(4000),KT(5),LINC(150),LINC1(150),LINC2(150),
     2   A(180),X(60),CU(40),VX(40),VY(40),KCH(40),AX(40),AY(40),
     3   ATX(40),ATY(40),ETX(40),ETY(40),XCU(40),KCY(10),PTX(60),
     4   PTY(60)
      JEX=KE
      JD=KED
      IF (NFUL) 500, 500, 60
  500 XEP = FLOATF(NYF-1) * H
      GO TO 70
   60 XEP = YAXS
   70 DO 33 JJ=1,NAJ
      J=JJ
CIF CU(J)=0.,NO CONTRIBUTION
      IF(CU(J)) 33,33,1
 1    IF(AY(J)+1.) 2,2,5
 2    IF(AX(1)-BXX) 3,4,4
 3    AY(J)=XLOW
      GO TO 5
 4    AY(J)=HGH
CIF CU(NAJ),LAST TUBE
 5    IF(J-NAJ)9,6,33
 6    IF(AY(JJ)) 7,8,8
 7    AY(JJ) = - AY(JJ)
 8    HT=(XEP-AY(JJ) )
         RT1=HT
      XH=AY(JJ)
         RT2=0.
      YL=XH+HT
      JX=AY(JJ)/DELY
      NA=JX+JEX
      NB=JD
      TB1 = VY(JJ)/VX(JJ)
      DE = ATANF (TB1)
      DE = COSF(DE)
         WA = VX(JJ)
         WB=WA
      GO TO 23
 9    HT=AY(J+1)-AY(J)
      IF(HT)12,12,13
 12   HT=-HT
      XH=AY(J+1)
         RT1=XEP-XH
CJX NORMALIZES Y-DISTANCES IN THE CELL
      JX=XH/DELY
      NB=AY(J)/DELY +1.
```

```
CALR CALCULATES RHS
         WA = VX(J+1)
         WB = VX(J)
      TB1=VY(J+1)/VX(J+1)
      TB2=VY(J)/VX(J)
      TBA = .5*(TB1+TB2)
      DE = ATANF(TBA)
      DE = COSF(DE)
      GO TO 14
 13   XH=AY(J)
         RT1=XEP-XH
CJX NORMALIZES Y-DISTANCES
      JX=XH/DELY
         WA = VX(J)
         WB= VX(J+1)
      TB1=VY(J+1)/VX(J+1)
      TB2=VY(J)/VX(J)
      TBA = .5*(TB1+TB2)
      DE = ATANF(TBA)
      DE = COSF(DE)
      NB=AY(J+1)/DELY +1.
 14   NA=JX+JEX
      NB=NB+JEX
      YL=XH+HT
         RT2=XEP-YL
 23   DO 32 K=NA,NB
      XA=K-JEX
 25   XUD=(XA-.5)*DELY
 26   XX=XUD+DELY
      YU=MAX1F(XUD,XH)
      YD=MIN1F(XX,YL)
      IF(YD-YU)32,32,27
 27   XA=.5*(YD+YU)
         W=WA+(XA-XH)*(WB-WA)/HT
CCALCULATION OF RHS
         IF(NDIM-2) 31,31,50
 50      RH(K)=RH(K)+(YD-YU)*2.*(XEP-XA)*CU(JJ)/((HT*W*DE)*(RT1+RT2))
         GO TO 32
 31   RH(K)=RH(K)+(YD-YU)*CU(JJ)/(HT*W *DE)
 32   CONTINUE
 33   CONTINUE
 38   RETURN
      END(1,1,0,0,0,0,1,0,0,0,0,0,0,0,0)
```

CORRCT CONDITIONALLY ENDS TRAJECTORIES

```
      SUBROUTINE CORRCT
CSPACE-CHARGE SOLUTION.VLAD HAMZA MICROWAVE LABORATORY.
      COMMON URH,UB,JT,RH,U,XT,KT,LINC,XR,NTOP,NUL,NLIN,ARCL,EQX,EQY,
     1   NPIT,XEP,NXEP,CU,LINC1,AX,AY,VX,VY,DX,DELY,YEP,XQM,H,KISW,ETX,
     2   ETY,PTY,PTX,NAJ,NTJ,VA,VB,VC,NCOOR,KCH,HSL,XLSL,EPS,NPOT,
     3   IDEC,JOT,NSPAN,RX,NRL,KRL,KRH,VAT,VBT,SIZE,KRT,RHUP,RHDOWN,
     4   XCU,NOT,MO,KCY,NSWP,ATX,ATY,LINC2,NXF,NYF,NURL,NJOT,XEMIT,
     5   IXO,HGH,XLOW,XMPR,NEM,A,X,JDY,AXX,BXX,CXX,DXX,NDIM,VD,VTH,
     6   VTHX,VTHY
         DIMENSION KRT(2),JT(4000),RH(4000),
     1   U(4000),XT(4000),KT(5),LINC(150),LINC1(150),LINC2(150),
     2   A(180),X(60),CU(40),VX(40),VY(40),KCH(40),AX(40),AY(40),
     3   ATX(40),ATY(40),ETX(40),ETY(40),XCU(40),KCY(10),PTX(60),
     4   PTY(60)
         XLOW1 = XLOW
         XLOW2 = HGH
         IF (AX(1) - AXX) 11,12,1
 1       IF (AX(1) - BXX) 12,2,2
 2       IF (AX(1) - CXX) 13,13,11
 13      XLOW1 = XLOW2
 12      DO 10 J=1,NTJ
         IF (AY(J) +1.)  10,10,5
 5       IF (AY(J) - XLOW1) 6,10,10
C  CHECK ON THE NEXT TRAJECTORY
 6       IF (AY(J+1) +1.) 9,9,4
 4       IF (AY(J+1) - XLOW1) 9,9,3
 3       AYD = AY(J+1) - AY(J)
         AYDS = AY(J+1) - XLOW1
         AYDL = AYD - AYDS
         CU(J) = CU(J) * AYDS/AYD
         VX(J) = (VX(J)*AYDL + VX(J+1)*AYDS)/AYD
         VY(J) = (VY(J)*AYDL + VY(J+1)*AYDS)/AYD
C   CHECK ON PREVIOUS TRAJECTORY (CASE 4)
         IF (J-1) 14,14,7
 7       IF (AY(J-1) - XLOW1) 14,8,8
 8       AYDS = AY(J-1) - XLOW1
         AYD = XABSF (AY(J-1) - AY(J))
         AYDL = AYD - AYDS
         CU(J-1) = CU(J-1)*AYDS/AYD
 14      AY(J) = XLOW1
         GO TO 10
 9       CU(J) = 0.
         AY(J) = -1.
 10      CONTINUE
 11      RETURN
      END(1,1,0,0,0,0,1,0,0,0,0,0,0,0,0)
```

EQLINE SOLVES FOR THE EQUIPOTENTIALS

```
          SUBROUTINE EQLINE
CSPACE-CHARGE SOLUTION.VLAD HAMZA MICROWAVE LABORATORY.
      COMMON URH,UB,JT,RH,U,XT,KT,LINC,XR,NTOP,NUL,NLIN,ARCL,EQX,EQY,
     1   NPIT,XEP,NXEP,CU,LINC1,AX,AY,VX,VY,DX,DELY,YEP,XQM,H,KISW,ETX,
     2   ETY,PTY,PTX,NAJ,NTJ,VA,VB,VC,NCOOR,KCH,HSL,XLSL,EPS,NPOT,
     3   IDEC,JOT,NSPAN,RX,NRL,KRL,KRH,VAT,VBT,SIZE,KRT,RHUP,RHDOWN,
     4   XCU,NOT,MO,KCY,NSWP,ATX,ATY,LINC2,NXF,NYF,NURL,NJOT,XEMIT,
     5   IXO,HGH,XLOW,XMPR,NEM,A,X,JDY,AXX,BXX,CXX,DXX,NDIM,VD,VTH,
     6   VTHX,VTHY
          DIMENSION KRT(2),JT(4000),RH(4000),
     1   U(4000),XT(4000),KT(5),LINC(150),LINC1(150),LINC2(150),
     2   A(180),X(60),CU(40),VX(40),VY(40),KCH(40),AX(40),AY(40),
     3   ATX(40),ATY(40),ETX(40),ETY(40),XCU(40),KCY(10),PTX(60),
     4   PTY(60)
          IF(SIZE)  1,27,1
 1        POTEN=VAT
          WRITE OUTPUT TAPE 6,101
 2        JE= NYF + 1
          JD = NYF - 1
          JC= NXF-1
          DX=1
          DX=DX*H
          BX=0.
          JED=JE+JD
          L=1
 3        AX=0.
 4        DO 22 JJ=1,JC
          KS=1
 5        AAY=0.
          DO 19 K=JE,JED
 6        IF(KS) 8,8,7
 7        M=1
          J=K-NYF
          GO TO 9
 8        J=K-1
 9     IF ( JT(K)-9999+JT(J)-9999)  28,18,18
 28       IF((U(K)-POTEN)*(U(J)-POTEN)) 10,10,18
 10       DIF=ABSF(U(J)-U(K))
          IF(DIF) 13,13,11
 11       IF(M) 12,14,12
 12       VX(L)=ABSF(U(J)-POTEN)/DIF*DX+AX
          VY(L)=AAY
          GO TO 15
 13       VX(L)=AX+DX
          VY(L)=AAY
          GO TO 15
 14       VX(L)=AX+DX
          VY(L)= ABSF(U(J)-POTEN)/DIF*DX+AAY
 15       IF(L-6) 17,16,16
 16       WRITE OUTPUT TAPE 6,100,POTEN,(VX(I),VY(I),I=1,6)
          L=0
 17       L=L+1
 18       AAY=AAY+DX
 19       CONTINUE
          IF(KS) 21,21,20
```

EQLINE SOLVES FOR THE EQUIPOTENTIALS

```
20      KS=0
        M=0
        JE=JE+1
        GO TO 5
21      JE=JE+JD
        JED=JE+JD
        BX=BX+DX
        AX=AX+DX
22      CONTINUE
        IF(L-2) 25,23,23
23      DO 24 J=L,6
        VX(J)=0.
24      VY(J)=0.
        WRITE OUTPUT TAPE 6,100,POTEN,(VX(I),VY(I),I=1,6)
25      POTEN=POTEN-SIZE
        IF(POTEN-VBT) 27,26,26
26      AX=AX-BX
        GO TO 2
27      RETURN
100  FORMAT(8H EQUIPOTF8.1,2H  6(1H(F8.5,1H,F8.5,1H)))
101     FORMAT(41H0  X,Y-COORDINATE OF EQUIPOTENTIAL LINES.  )
     END(1,1,0,0,0,0,1,0,0,0,0,0,0,0,0)
```

MATRIX IS USED FOR THE FORWARD AND BACK SUBSTITUTION

```
      SUBROUTINE MATRIX(N,A,X)
CSPACE-CHARGE SOLUTION.VLAD HAMZA MICROWAVE LABORATORY.
      COMMON URH,UB,JT,RH,U,XT,KT,LINC,XR,NTOP,NUL,NLIN,ARCL,EQX,EQY,
     1   NPIT,XEP,NXEP,CU,LINC1,AX,AY,VX,VY,DX,DELY,YEP,XQM,H,KISW,ETX,
     2   ETY,PTY,PTX,NAJ,NTJ,VA,VB,VC,NCOOR,KCH,HSL,XLSL,EPS,NPOT,
     3   IDEC,JOT,NSPAN,RX,NRL,KRL,KRH,VAT,VBT,SIZE,KRT,RHUP,RHDOWN,
     4   XCU,NOT,MO,KCY,NSWP,ATX,ATY,LINC2,NXF,NYF,NURL,NJOT,XEMIT,
     5   IXO,HGH,XLOW,XMPR,NEM,A,X,JDY,AXX,BXX,CXX,DXX,NDIM,VD,VTH,
     6   VTHX,VTHY
         DIMENSION KRT(2),JT(4000),RH(4000),
     1   U(4000),XT(4000),KT(5),LINC(150),LINC1(150),LINC2(150),
     2   A(180),X(60),CU(40),VX(40),VY(40),KCH(40),AX(40),AY(40),
     3   ATX(40),ATY(40),ETX(40),ETY(40),XCU(40),KCY(10),PTX(60),
     4   PTY(60)
      M=3*N-2
         A(M+1)=0.
      A(2)=A(2)/A
      X=X/A
         IF(N-1) 12,12,9
 9    K=2
      DO 10 J=4,M,3
      A(J)=A(J)-A(J-1)*A(J-2)
      A(J+1)=A(J+1)/A(J)
      X(K)=(X(K)-A(J-1)*X(K-1))/A(J)
 10   K=K+1
         K=K-1
      DO 11 J=1,M,3
      NB=M-J-1
      K=K-1
 11   X(K)=X(K)-A(NB)*X(K+1)
 12      RETURN
      END(1,1,0,0,0,0,1,0,0,0,0,0,0,0,0)
```

MNTRI CALCULATES TRAJECTORIES AND RHS (FOR SOLID BEAM)

```
      SUBROUTINE MNTRI
CSPACE-CHARGE SOLUTION.VLAD HAMZA MICROWAVE LABORATORY.
      COMMON URH,UB,JT,RH,U,XT,KT,LINC,XR,NTOP,NUL,NLIN,ARCL,EQX,EQY,
     1   NPIT,XEP,NXEP,CU,LINC1,AX,AY,VX,VY,DX,DELY,YEP,XQM,H,KISW,ETX,
     2   ETY,PTY,PTX,NAJ,NTJ,VA,VB,VC,NCOOR,KCH,HSL,XLSL,EPS,NPOT,
     3   IDEC,JOT,NSPAN,RX,NRL,KRL,KRH,VAT,VBT,SIZE,KRT,RHUP,RHDOWN,
     4   XCU,NOT,MO,KCY,NSWP,ATX,ATY,LINC2,NXF,NYF,NURL,NJOT,XEMIT,
     5   IXO,HGH,XLOW,XMPR,NEM,A,X,JDY,AXX,BXX,CXX,DXX,NDIM,VD,VTH,
     6   VTHX,VTHY, YAXS, NFUL
         DIMENSION KRT(2),JT(4000),RH(4000),
     1   U(4000),XT(4000),KT(5),LINC(150),LINC1(150),LINC2(150),
     2   A(180),X(60),CU(40),VX(40),VY(40),KCH(40),AX(40),AY(40),
     3   ATX(40),ATY(40),ETX(40),ETY(40),XCU(40),KCY(10),PTX(60),
     4   PTY(60)
         DIMENSION E1X(40),E1Y(40)
      DELY=H
      DX=DELY
 301  IWRL=NRL-KRL+XABSF(MO)
      DO 1 J=1,40
      VY(J)=0.
      VX(J)=.0001
      AY(J)=0.
      XCU(J)=0.
      CU(J)=0.
CKCH=REFLECTION PARAMETER (ADDS ONE EVERYTIME TRAJECTORY REFLECTS)
 1    KCH(J)=-1
         DO 35 J=1,60
      PTX(J)=0.
 35   PTY(J)=0.
         IF (KCY(IWRL)) 903,903,902
 902     CALL PLOT (ATX(1)*VD,-ATY(1)*VD,3)
         DO 901 J=2,NEM
 901     CALL PLOT (ATX(J)*VD,-ATY(J)*VD,2)
 903  NAJ=NTJ
      IF(NCOOR)2,2,3
CARC CALCULATES THE EMITTER COORDINATES
 2    CALL ARC
    3    DO 909 J=1,NTJ
         E1X(J) = ETX(J)
 909     E1Y(J) = ETY(J)
         NCOOR = 1
CPEQ CALCULATES THE EQUIPOTENTIAL LINE FOR CU CALCULATION
      CALL PEQ
         AX(1) = 0.
      JCX=NXF-2
      JEX=NYF+1
      IF (NFUL) 50, 50, 60
   50 XEP = FLOATF(NYF-1) * DX
      GO TO 70
   60 XEP = YAXS
   70 DO 22 JN=1,JCX
  400 JD=JEX+NYF-1
         AX(1) = AX(1) + DX
CTRCU CALCULATES THE CURRENT IN THE TUBES AND CALLS TRAJ
      CALL TRCU(JEX,JD)
```

```
MNTRI CALCULATES TRAJECTORIES AND RHS (FOR SOLID BEAM)

 11    CONTINUE
          IF (KCY(IWRL)) 19,19,18
 18    WRITE OUTPUT TAPE 6,101,AX(1),(K,AY(K),VX(K),VY(K),K=1,NTJ)
          XP = AX(1)
          DO 906 J=1,NTJ
          IF (AY(J)) 906,906,905
 905      YP = AY(J)
          CALL PLOT (E1X(J)*VD,-E1Y(J)*VD,3)
          CALL PLOT (XP*VD,-YP*VD,2)
          E1X(J)=AX(1)
          E1Y(J) = AY(J)
 906      CONTINUE
CCALR CALCULATES THE RHS
 19    CALL CALR (JEX,JD)
 22    JEX=JEX+NYF
          IF (KCY(IWRL)) 907,907,24
 24       IF (IXO) 908,908,20
 20    CALL TROUT
 908      XMAX = FLOATF(NXF-1)*H*VD + 3.0
          S = XMAX - 3.0
          XMIN = ATX(NEM)*VD
          YMAX = - XEP*VD
          SDX = 1.0/VD
       CALL PLOT (XMAX, 0.0, -3)
          DO 910 J=1,NTJ
          E1X(J) = ETX(J)
 910      E1Y(J) = ETY(J)
 907      SUM = 0.0
       DO 10 J=1,NAJ
 10    SUM=SUM+XCU(J)
 305   WRITE OUTPUT TAPE 6,102,(J,XCU(J),J=1,NAJ)
       WRITE OUTPUT TAPE 6,103,SUM
 304   IF(NURL)303,303,302
 302   IF (NRL-KRL) 306,307,306
 307   WW = SQRTF(2.*XQM*(VA-VB))
          RHM = 2.*SUM/WW
 306   DO 4 J=1,NTOP
       RH(J) = .5*RH(J)
       IF (RHM-RH(J)) 5,4,4
 5     RH(J) = RHM
 4     CONTINUE
       IF (KRL)  8,7,8
 7     MO=0
       KRL=1
       JJ=NRL
       KCY(JJ)= 777
       WRITE OUTPUT TAPE 6,100
       GO TO 9
 8     WRITE OUTPUT TAPE 6,104,IWRL
 9     RT=RH(KRH)*RX
       WRITE OUTPUT TAPE 6,105,RT,U(KRH)
 21    KRL=KRL-1
CUCAL SOLVES THE MATRIX EQUATION
       CALL UCAL
       GO TO 301
 303   RETURN
```

MNTRI CALCULATES TRAJECTORIES AND RHS (FOR SOLID BEAM)

```
100  FORMAT(25H1  L A S T   C Y C L E    )
101  FORMAT(3X3H X=F10.5,5H  NO.,7X1HY,14X2HVX,14X2HVY/(16XI5,3E15.6))
102  FORMAT(27HOEMITTER CURRENT IN TUBES  /(7(1XI2,E14.6)))
103  FORMAT(25H TOTAL EMITTER CURRENT     E14.6)
104  FORMAT(18H1  C Y C L E  NO.          I2)
105  FORMAT(11HO  RHTEST= F9.5,6X7HUTEST= F11.4)
     END(1,0,0,0,0,0,1,0,0,0,0,0,0,0,0)
```

PEQ CALCULATES THE EQUIPOTENTIAL LINE FOR THE CURRENT DENSITY

```
      SUBROUTINE PEQ
CSPACE-CHARGE SOLUTION.VLAD HAMZA MICROWAVE LABORATORY.
      COMMON URH,UB,JT,RH,U,XT,KT,LINC,XR,NTOP,NUL,NLIN,ARCL,EQX,EQY,
     1 NPIT,XEP,NXEP,CU,LINC1,AX,AY,VX,VY,DX,DELY,YEP,XQM,H,KISW,ETX,
     2 ETY,PTY,PTX,NAJ,NTJ,VA,VB,VC,NCOOR,KCH,HSL,XLSL,EPS,NPOT,
     3 IDEC,JOT,NSPAN,RX,NRL,KRL,KRH,VAT,VBT,SIZE,KRT,RHUP,RHDOWN,
     4 XCU,NOT,MO,KCY,NSWP,ATX,ATY,LINC2,NXF,NYF,NURL,NJOT,XEMIT,
     5 IXO,HGH,XLOW,XMPR,NEM,A,X,JDY,AXX,BXX,CXX,DXX,NDIM,VD,VTH,
     6 VTHX,VTHY
      DIMENSION KRT(2),JT(4000),RH(4000),
     1 U(4000),XT(4000),KT(5),LINC(150),LINC1(150),LINC2(150),
     2 A(180),X(60),CU(40),VX(40),VY(40),KCH(40),AX(40),AY(40),
     3 ATX(40),ATY(40),ETX(40),ETY(40),XCU(40),KCY(10),PTX(60),
     4 PTY(60)
C NPOT=POINT  THRU WHICH THE EQUIPOTENTIAL LINE IS DETERMINED
      POTEN=U(NPOT)
      DX=H
      L=0
24    AAX=0.
      JE= NYF + 1
      DO 28 JJ=1,NSPAN
      AAY=0.
      JED=JE+NYF-1
      DO 27 K=JE,JED
      J = K - NYF
      IF((U(K)-POTEN)*(U(J)-POTEN)) 21,21,27
21    DIF=ABSF(U(J)-U(K))
      L=L+1
      PTY(L)=AAY
      IF(DIF) 22,26,22
22    PTX(L)=ABSF(U(J)-POTEN)/DIF*DX+AAX
      GO TO 27
26    PTX(L)=AAX+DX
27    AAY=AAY+DX
      AAX=AAX+DX
28    JE = JE + NYF
      DO 41 J=1,L
      LL=L-J+1
      TT=0.
      JJ=LL
      DO 40 I=1,LL
      IF(TT-PTY(I)) 39,39,40
39    TT=PTY(I)
      NN=I
40    CONTINUE
      PP=PTY(JJ)
      PTY(JJ)=TT
      PTY(NN)=PP
      PP=PTX(JJ)
      PTX(JJ)=PTX(NN)
      PTX(NN)=PP
41    CONTINUE
      DO 44 J=2,L
      IF(PTY(J)-PTY(J-1)) 44,42,44
42    NN=L-1
```

PEQ CALCULATES THE EQUIPOTENTIAL LINE FOR THE CJRRENT DENSITY

```
         DO 43 JJ=J,NN
         PTX(JJ)=PTX(JJ+1)
43       PTY(JJ)=PTY(JJ+1)
44       CONTINUE
      EQX=PTX(L-1)
      EQY=PTY(L-1)
         DO 210 KJ=1,L
         IF (PTY(KJ)-PTY(KJ+1)) 210,211,210
211      PM = MIN1F(PTX(KJ),PTX(KJ+1))
         PTX(KJ) = PM
         PTX(KJ+1) = PM
210      CONTINUE
70       WRITE OUTPUT TAPE 6,100,(J,PTX(J),PTY(J),J=1,L)
60       RETURN
100   FORMAT(18H0X,Y-EQUIPOTENTIAL /,(7(1H ,I2,2H (F5.3,1H,F5.3,2H) )))
      END(1,1,0,0,0,0,1,0,0,0,0,0,0,0,0)
```

TRAJ CALCULATES THE TRAJECTORY COORDINATES AND VELOCITIES

```
      SUBROUTINE TRAJ(M,KE,KED)
CSPACE-CHARGE SOLUTION.VLAD HAMZA MICROWAVE LABORATORY.
      COMMON URH,UB,JT,RH,U,XT,KT,LINC,XR,NTOP,NUL,NLIN,ARCL,EQX,EQY,
     1   NPIT,XEP,NXEP,CU,LINC1,AX,AY,VX,VY,DX,DELY,YEP,XQM,H,KISW,ETX,
     2   ETY,PTY,PTX,NAJ,NTJ,VA,VB,VC,NCOOR,KCH,HSL,XLSL,EPS,NPOT,
     3   IDEC,JOT,NSPAN,RX,NRL,KRL,KRH,VAT,VBT,SIZE,KRT,RHUP,RHDOWN,
     4   XCU,NOT,MO,KCY,NSWP,ATX,ATY,LINC2,NXF,NYF,NURL,NJOT,XEMIT,
     5   IXO,HGH,XLOW,XMPR,NEM,A,X,JDY,AXX,BXX,CXX,DXX,NDIM,VD,VTH,
     6   VTHX,VTHY
         DIMENSION KRT(2),JT(4000),RH(4000),
     1   U(4000),XT(4000),KT(5),LINC(150),LINC1(150),LINC2(150),
     2   A(180),X(60),CU(40),VX(40),VY(40),KCH(40),AX(40),AY(40),
     3   ATX(40),ATY(40),ETX(40),ETY(40),XCU(40),KCY(10),PTX(60),
     4   PTY(60)
         JE=KE                                                          300019
         JED=KED                                                        300020
         K=M                                                            300021
         XEP = FLOATF(NYF-1)*H
         AD=AY(K)/DX                                                    300022
         JX=AD                                                          300023
         XA=JX                                                          300024
         XA=AD-XA                                                       300025
         JP=JX+JE                                                       300026
         JS = 10
         JQ = JP-NYF
         UL=(1.-XA)*U(JQ)+XA*U(JQ+1)                                    300029
         UK=(1.-XA)*U(JP)+XA*U(JP+1)                                    300030
C CALCULATION OF LEFTHAND DERIVATIVE                                    300031
         IF(XA-.5) 1,1,5                                                300032
 1       IF(JX) 2,2,3
 2       YLA=2.*XA*(U(JQ+1)-U(JQ))                                      300034
         GO TO 4                                                        300035
 3       YLA=(XA+.5)*U(JQ+1)-2.*XA*U(JQ)+(XA-.5)*U(JQ-1)
 4       DY=VY(K)/VX(K)                                                 300037
         JOX=JX                                                         300038
         GO TO 7                                                        300039
 5       JX=JX+1                                                        300040
         JQ=JQ+1                                                        300041
         XA=XA-1.                                                       300042
         IF (JX-NYF +1)   3,6,6
 6       YLA=2.*XA*(U(JQ-1)-U(JQ))                                      300044
         GO TO 4                                                        300045
C CALCULATION OF RIGHTHAND DERIVATIVE                                   300046
 7       XB=XA+DY                                                       300047
         IF(DY) 9,9,10                                                  300048
 8       JX=JX-1                                                        300049
         XB=1.+XB                                                       300050
 9       IF(XB+.5) 8,12,12                                              300051
 11      XB=XB-1.                                                       300052
         JX=JX+1                                                        300053
 10      IF(XB-.5) 12,12,11                                             300054
 12      IF(JX) 14,17,16                                                300055
 13      JX=JX+2*(1-NYF)
 14      JX=-JX                                                         300057
         XB=-XB                                                         300058
```

```
15      JP=JE+JX                                                        300059
        YRA=(XB+.5)*U(JP+1)-2.*XB*U(JP) + (XB-.5)*U(JP-1)
        IF(XB) 19,20,20                                                 300061
16      IF (JX-NYF +1) 30,18,13
30      IF(K-1) 32,32,15
32      IF(AX(1)-ETX(1)-2.*H) 34,34,15
34      XB=ABSF(XB)
17      JP=JE + JX
        YRA=2.*XB*(U(JP+1)-U(JP))                                       300064
        XB=ABSF(XB)                                                     300065
        GO TO 20                                                        300066
18      JP=JE+JX                                                        300067
        YRA=2.*XB*(U(JP-1)-U(JP))                                       300068
19      JP=JP-1                                                         300069
        XB=1.-ABSF(XB)                                                  300070
20      JQ = JP-NYF
        USN=(1.-XB)*U(JQ)+XB*U(JQ+1)                                    300072
        UQN=(1.-XB)*U(JP)+XB*U(JP+1)                                    300073
        DUX=.5*(UK-UL-USN+UQN)                                          300074
        DUXX = VX(K)**2-2.*XQM*DUX
        IF (DUXX) 35,36,36
35      VXB=- SQRTF(-DUXX)
        GO TO 37
36      VXB = SQRTF(DUXX)
37      DT = ABSF(2.*DX/(VXB+VX(K)))
        JS=JS-1                                                         300077
C YA=Y ACCELERATION                                                     300078
        XD = .5*XQM/DX
        YA=XD*(YLA+YRA)                                                 300079
C DY=DELTA Y INCREMENT                                                  300080
        DY=DT*(VY(K)-.5*YA*DT)/DX                                       300081
        JX=JOX                                                          300082
        IF(JS) 21,21, 7                                                 300083
21      VX(K)=VXB                                                       300084
        IF (VX(K)) 38,38,39
38      CU(K) = 0.
        AY(K) = -1.
        GO TO 26
39      VY(K)=VY(K)-YA*DT                                               300085
        AY(K)=AY(K)+DY*DX                                               300086
C REFLECTION OF TRAJECTORIES IF OUTSIDE BOUNDS                          300087
        IF(AY(K))22,23,23                                               300088
22      AY(K)=-AY(K)                                                    300089
        GO TO 25                                                        300090
23      IF(AY(K)-XEP) 26,26,24                                          300091
24      AY(K)=XEP+XEP-AY(K)                                             300092
        IF(VY(K))27,27,25                                               300093
25      VY(K)=-VY(K)                                                    300094
27      KCH(K)=KCH(K)+1                                                 300095
26      CONTINUE                                                        300096
        RETURN                                                          300097
      END(1,0,0,0,0,0,1,0,0,0,0,0,0,0,0)
```

```
  TRCU   INITIALIZES TRAJ. AND CALCULATES CUR.DENSITIES

      SUBROUTINE TRCU(KE,KED)
CSPACE-CHARGE SOLUTION.VLAD HAMZA MICROWAVE LABORATORY.
      COMMON URH,UB,JT,RH,U,XT,KT,LINC,XR,NTOP,NUL,NLIN,ARCL,EQX,EQY,
     1   NPIT,XEP,NXEP,CU,LINC1,AX,AY,VX,VY,DX,DELY,YEP,XQM,H,KISW,ETX,
     2   ETY,PTY,PTX,NAJ,NTJ,VA,VB,VC,NCOOR,KCH,HSL,XLSL,EPS,NPOT,
     3   IDEC,JOT,NSPAN,RX,NRL,KRL,KRH,VAT,VBT,SIZE,KRT,RHUP,RHDOWN,
     4   XCU,NOT,MO,KCY,NSWP,ATX,ATY,LINC2,NXF,NYF,NURL,NJOT,XEMIT,
     5   IXO,HGH,XLOW,XMPR,NEM,A,X,JDY,AXX,BXX,CXX,DXX,NDIM,VD,VTH,
     6   VTHX,VTHY, YAXS, NFUL
         DIMENSION KRT(2),JT(4000),RH(4000),
     1   U(4000),XT(4000),KT(5),LINC(150),LINC1(150),LINC2(150),
     2   A(180),X(60),CU(40),VX(40),VY(40),KCH(40),AX(40),AY(40),
     3   ATX(40),ATY(40),ETX(40),ETY(40),XCU(40),KCY(10),PTX(60),
     4   PTY(60)
         DIMENSION US(2),UR(2)
      JEX=KE
      JD=KED
      DO 16 K=1,NTJ
      IF (NFUL) 50, 50, 60
   60 XEP = YAXS
   50 LL=0
      KK=K
CCHECK ON TERMINATED TRAJECTORIES
      IF(AY(K)+1.) 16,16,18
CCHECK ON UNINITIALIZED TRAJECTORIES
 18   IF(KCH(K))20,15,15
CCHECK IF TRAJECTORY CAN BE INITIALIZED
 20      IF (AX(1)-ETX(KK)-.05*H) 16,16,2
 2    KK=KK+1
         IF (IDEC ) 800,801,801
 801     TB=(XEP-ETY(KK-1))/(XEMIT+ETX(KK-1))
         DE = ATANF(TB)
         TB = - TB
         XX= ETY(KK-1)-TB*ETX(KK-1)
         JJ=1
         GO TO 42
 800     TB=(XEP-ETY(KK-1))/(XEMIT-ETX(KK-1))
         DE = ATANF(TB)
         XX= ETY(KK-1)-TB*ETX(KK-1)
         JDY1= ETY(KK-1)/DX +1.
         DO 777 JJB=1,JDY
         IF (PTY(JJB)) 774,774,775
 775     JJC = PTY(JJB)/DX +1.
         IF (JJC-JDY1-1) 777,777,779
 779     JJ=JJB
         GO TO 776
 774     JJ= JJB-1
 776     JJB = JDY
 777     CONTINUE
 4       IF (PTY(JJ+1)) 42,6,42
 42      PTT = PTX(JJ)-PTX(JJ+1)
         PTT=ABSF(PTT)
         IF(PTT-.0001) 43,43,44
 43      CPX = PTX(JJ)
         CPY = ETY(KK-1) + TB*CPX
```

```
          GO TO 45
 44       TA = -DX/(PTX(JJ)-PTX(JJ+1))
          YY=PTY(JJ)-TA*PTX(JJ)
          CPX=(YY-XX)/(TB-TA)
          CPY=YY+TA*CPX
 45       IF(IDEC) 5,7,7
 5        IF ((CPY-PTY(JJ))*(CPY-PTY(JJ+1))) 8,8,6
 6        JJ = JJ-1
          GO TO 4
 7        IF(PTY(JJ+1)-CPY) 3,3,8
 3        JJ = JJ+1
          GO TO 4
 8     LL=LL+1
       IF (LL-2)9,10,10
CTRAJECTORIES INITIALIZED
 9     AY(KK-1)=ETY(KK-1)+TB*(AX(1)-ETX(KK-1))
       XA=AY(KK-1)/DX
       JX=XA
       JP=JEX+JX
       AD=JX
       XA=XA-AD
       UP=(1.-XA)*U(JP)+XA*U(JP+1)
          PHI = 1.570795 - DE
          IF (VA-UP) 900,901,901
 900      V = - SQRTF(2.*XQM*(UP-VA))
          VX(KK-1) = V*COSF(DE) + VTH*COSF(PHI)
          IF (VX(KK-1)) 904,904,903
 904      AY(KK-1) = -1.
          CU(K) = 0.
          KCH(K) = 0
          GO TO 16
 901   V=SQRTF(2.*XQM*(VA-UP))
          VX(KK-1) = V*COSF(DE) + VTH*COSF(PHI)
 903      IF (IDEC) 850,851,851
 851      VY(KK-1) = - V*SINF(DE) - VTH*SINF(PHI)
          GO TO 902
 850   VY(KK-1)=V*SINF(DE) - VTH*SINF(PHI)
 902      TB = VY(KK-1)/VX(KK-1)
          AY(K) = ETY(KK-1) + TB*(AX(1)-ETX(KK-1))
 10    US(LL)=CPX
       UR(LL)=CPY
       IF(K-NTJ)12,11,12
CSPECIAL FOR LAST CURRENT DENSITY
 11    LL=2
       US(2)=EQX
       UR(2)=XEP
       PPX=.5*(ETX(KK-1)+ETX(KK) )
       PX=.5 *(US(1)+US(2))
       PPY=.5*(ETY(KK-1)+ETY(KK))
       RHO = XEP - ETY(KK-1)
       PY=.5 *(UR(1)+UR(2))
       GO TO 31
 12    IF(LL-2)2,14,14
 14    PPX = .5*(ETX(KK-2)+ETX(KK-1))
       PX=.5*(US(1)+US(2))
       PPY = .5*(ETY(KK-2)+ETY(KK-1))
```

```
 TRCU   INITIALIZES TRAJ. AND CALCULATES CUR.DENSITIES

      RHO=XEP-PPY
      PY=.5*(UR(1)+UR(2))
 31   DEX=SQRTF((PX-PPX)**2+(PY-PPY)**2)
         IF (IDEC) 603,604,604
 603     RA = DEX/(XEMIT-ETX(NTJ+1))
         IF (NDIM-2) 631,631,602
 602     CR= 1.+1.6*RA + 2.06*(RA**2)
         GO TO 600
 631     CR= 1. +.8*RA +.66*(RA**2)
         GO TO 600
 604     RA = DEX/(XEMIT+ETX(NTJ+1))
         IF (NDIM-2) 605,605,606
 606     CR = 1.-1.6*RA + 2.6*(RA**2)
         GO TO 600
 605     CR = 1.-.8*RA+.66*(RA**2)
 600  POTEN=U(NPOT)
      DELU=VA-POTEN
      XK=4./9.*YEP*SQRTF(2.*XQM*DELU)*DELU
      YCU=XK/(CR*DEX**2)
CCALCULATION OF CURRENT DENSITY
 53   IF (NDIM-2) 54,54,55
 54   IF (K-NTJ) 56,57,57
 56   CU(K)= YCU*ARCL
      XCU(K) = CU(K)
      GO TO 52
 57   CU(K)= .5*ARCL*YCU
      XCU(K) = CU(K)
      GO TO 52
 55   IF (K-NTJ) 17,19,19
 19   CU(K) = YCU*RHO**2
      XCU(K) = CU(K)*3.1416
      GO TO 52
 17   CU(K) = ARCL*RHO*YCU
      XCU(K) = CU(K) * 6.2832
 52      IF (AX(1)-ETX(K)-.5*H) 51,51,58
 58      KCH(K) = 0
 51    WRITE OUTPUT TAPE 6,100,US(1),US(2),UR(1),UR(2),DEX,YCU,
     1   KCH(K),K
      GO TO 16
CTRAJ CALCULATES THE TRAJECTORIES AFTER THEY HAVE BEEN INITIALIZED
 15   CALL TRAJ(K,JEX,JD)
 16   CONTINUE
      CALL CORRCT
      RETURN
 100  FORMAT(4H X1=E8.3,4H X2=E8.3,4H Y1=E8.3,4H Y2=E8.3,4H DX=E8.3,
     14H CD=E10.4,2I5)
      END(1,1,0,0,0,0,1,0,0,0,0,0,0,0,0)
```

TROUT PRINTS OUT THE RHS

```
          SUBROUTINE TROUT
CSPACE-CHARGE SOLUTION.VLAD HAMZA MICROWAVE LABORATORY.
      COMMON URH,UB,JT,RH,U,XT,KT,LINC,XR,NTOP,NUL,NLIN,ARCL,EQX,EQY,
     1   NPIT,XEP,NXEP,CU,LINC1,AX,AY,VX,VY,DX,DELY,YEP,XQM,H,KISW,ETX,
     2   ETY,PTY,PTX,NAJ,NTJ,VA,VB,VC,NCOOR,KCH,HSL,XLSL,EPS,NPOT,
     3   IDEC,JOT,NSPAN,RX,NRL,KRL,KRH,VAT,VBT,SIZE,KRT,RHUP,RHDOWN,
     4   XCU,NOT,MO,KCY,NSWP,ATX,ATY,LINC2,NXF,NYF,NURL,NJOT,XEMIT,
     5   IXO,HGH,XLOW,XMPR,NEM,A,X,JDY,AXX,BXX,CXX,DXX,NDIM,VD,VTH,
     6   VTHX,VTHY
         DIMENSION KRT(2),JT(4000),RH(4000),
     1   U(4000),XT(4000),KT(5),LINC(150),LINC1(150),LINC2(150),
     2   A(180),X(60),CU(40),VX(40),VY(40),KCH(40),AX(40),AY(40),
     3   ATX(40),ATY(40),ETX(40),ETY(40),XCU(40),KCY(10),PTX(60),
     4   PTY(60)
      DIMENSION NTY(8),NTX(150)
         IF(MO) 10,3,10
 10      K=1
         WRITE OUTPUT TAPE 6,101
      NN=1
      DO 1 N=1,NXF
      NTX(NN)=N
      DO 4 J=1,NYF
      NTY(K)=J
      I=(N-1)*NYF+J
      PTY(K)=RH(I)*RX
      K=K+1
      IF (J-NYF) 13,14,14
 13   IF (K-9) 4,2,2
 14   DO 7 JJ=K,8
      PTY(JJ)=0.0
 7    NTY(JJ)=0
 2    WRITE OUTPUT TAPE 6,100,NTX(NN),(NTY(L),L=1,8),(PTY(L),L=1,8)
         K=1
 4    CONTINUE
      NN=NN+1
 1    CONTINUE
 8       RETURN
 3       WRITE OUTPUT TAPE 6,104
         GO TO 10
 100  FORMAT (1H I3,3X8I4,8F10.3)
 101     FORMAT(49H0   RHS OF MATRIX EQUATION - SPACE-CHARGE DENSITY  )
 104  FORMAT(25H0RH-FIELD OF LAST CYCLE        )
      END(1,1,0,0,0,0,1,0,0,0,0,0,0,0,0)
```

TWOUT PRINTS OUT THE POTENTIAL FIELD

```
      SUBROUTINE TWOUT
CSPACE-CHARGE SOLUTION.VLAD HAMZA MICROWAVE LABORATORY.
      COMMON URH,UB,JT,RH,U,XT,KT,LINC,XR,NTOP,NUL,NLIN,ARCL,EQX,EQY,
     1   NPIT,XEP,NXEP,CU,LINC1,AX,AY,VX,VY,DX,DELY,YEP,XQM,H,KISW,ETX,
     2   ETY,PTY,PTX,NAJ,NTJ,VA,VB,VC,NCOOR,KCH,HSL,XLSL,EPS,NPOT,
     3   IDEC,JOT,NSPAN,RX,NRL,KRL,KRH,VAT,VBT,SIZE,KRT,RHUP,RHDOWN,
     4   XCU,NOT,MO,KCY,NSWP,ATX,ATY,LINC2,NXF,NYF,NURL,NJOT,XEMIT,
     5   IXO,HGH,XLOW,XMPR,NEM,A,X,JDY,AXX,BXX,CXX,DXX,NDIM,VD,VTH,
     6   VTHX,VTHY
      DIMENSION KRT(2),JT(4000),RH(4000),
     1   U(4000),XT(4000),KT(5),LINC(150),LINC1(150),LINC2(150),
     2   A(180),X(60),CU(40),VX(40),VY(40),KCH(40),AX(40),AY(40),
     3   ATX(40),ATY(40),ETX(40),ETY(40),XCU(40),KCY(10),PTX(60),
     4   PTY(60)
      DIMENSION NTY(8),NTX(150)
      IF(MO) 10,3,10
 10   K=1
      WRITE OUTPUT TAPE 6,101
      NN=1
      DO 1 N=1,NXF
      NTX(NN)=N
      DO 4 J=1,NYF
      NTY(K)=J
      I=(N-1)*NYF+J
      PTY(K)=U(I)
      K=K+1
      IF (J-NYF) 13,14,14
 13   IF (K-9) 4,2,2
 14   DO 7 JJ=K,8
      PTY(JJ)=0.0
 7    NTY(JJ)=0
 2    WRITE OUTPUT TAPE 6,100,NTX(NN),(NTY(L),L=1,8),(PTY(L),L=1,8)
      K=1
 4    CONTINUE
      NN=NN+1
 1    CONTINUE
 8    RETURN
 3    WRITE OUTPUT TAPE 6,104
      NURL=-7777
      GO TO 10
 100  FORMAT (1H I3,3X8I4,8F10.3)
 101  FORMAT(25HO  U-FIELD OF THIS CYCLE.  )
 104  FORMAT(25HOU-FIELD OF LAST CYCLE.      )
      END(1,1,0,0,0,0,1,0,0,0,0,0,0,0,0)
```

UCAL SOLVES THE MATRIX EQUATION

```
      SUBROUTINE UCAL
CSPACE-CHARGE SOLUTION.VLAD HAMZA MICROWAVE LABORATORY.
      COMMON URH,UB,JT,RH,U,XT,KT,LINC,XR,NTOP,NUL,NLIN,ARCL,EQX,EQY,
     1   NPIT,XEP,NXEP,CU,LINC1,AX,AY,VX,VY,DX,DELY,YEP,XQM,H,KISW,ETX,
     2   ETY,PTY,PTX,NAJ,NTJ,VA,VB,VC,NCOOR,KCH,HSL,XLSL,EPS,NPOT,
     3   IDEC,JOT,NSPAN,RX,NRL,KRL,KRH,VAT,VBT,SIZE,KRT,RHUP,RHDOWN,
     4   XCU,NOT,MO,KCY,NSWP,ATX,ATY,LINC2,NXF,NYF,NURL,NJOT,XEMIT,
     5   IXO,HGH,XLOW,XMPR,NEM,A,X,JDY,AXX,BXX,CXX,DXX,NDIM,VD,VTH,
     6   VTHX,VTHY
      DIMENSION KRT(2),JT(4000),RH(4000),
     1   U(4000),XT(4000),KT(5),LINC(150),LINC1(150),LINC2(150),
     2   A(180),X(60),CU(40),VX(40),VY(40),KCH(40),AX(40),AY(40),
     3   ATX(40),ATY(40),ETX(40),ETY(40),XCU(40),KCY(10),PTX(60),
     4   PTY(60)
      IF (NRL-KRL) 46,6,46
 6    WRITE OUTPUT TAPE 6,101
 46   XW=1.
      DO 30 NLU=1,NUL
      NEZ=NLU
      XEP=0.
      XM=.25*XR**2
      NOD=1
 38   DO 29 NL=1,NLIN
      IF(LINC(NL))29,29,33
 33   KB=LINC1(NL)
      KC=LINC2(NL)
      JV=1
      JU=1
      DO 28 K=KB,KC
      SUM=0
      JZ=JT(K)
 27   DO 22 JY=3,5
      JX=JZ+JY
      A(JU)=XT(JX)
 22   JU=JU+1
      DO 26 JY=1,5
      JX=JZ+JY
      IF(KT(JY))34,26,34
 34   IF(XT(JX)) 26,26,25
 25   JW=K+KT(JY)
      SUM=SUM+XT(JX)*U(JW)
 26   CONTINUE
      X(JV)=SUM+XT(JZ)*RH(K)*RX
      JV=JV+1
 28   CONTINUE
      N=KC-KB+1
C MATRIX IS USED FOR THE FORWARD AND BACK SUBSTITUTION
      CALL MATRIX (N,A(2),X)
      JV=1
      DO 24 K=KB,KC
 23   DIF=X(JV)-U(K)
      JV=JV+1
C MATRIX EQUATION
      U(K)=XW*DIF+U(K)
      DIF=ABSF(DIF)
```

UCAL SOLVES THE MATRIX EQUATION

```
          IF(DIF-XEP) 24,24,21
 21       XEP=DIF
          NXEP=K
 24       CONTINUE
 29       LINC(NL)=-LINC(NL)
          IF(XW-1.)  40,31,40
 40       XW=1./(1.-XM*XW)
          GO TO 41
 31       XW=1./(1.-2.*XM)
 41       IF(NOD) 37,37,36
 36       NOD=0
          GO TO 38
 37       XCON=XEP*XMPR
          IF(XCON -EPS) 42,42,30
 30       CONTINUE
 42       KNUT=KRT(1)
          J=2
          DO 43 K=1,KNUT
          JN=KRT(J)
          IF(U(JN)-VA) 43,49,49
 43       J=J+1
          GO TO 47
 49       WRITE OUTPUT TAPE 6,102
          WRITE OUTPUT TAPE 6,100,JN,U(JN)
          CALL EXIT
 47       IF(NRL-KRL) 2,1,2
 1        NUL=NURL
 2        IWRL=NRL-KRL+XABSF(MO)
          WRITE OUTPUT TAPE 6,104,NEZ,NXEP,XCON,EPS
          IF(KCY(IWRL)) 4,4,3
C TWOUT PRINTS OUT THE POTENTIAL FIELD
 3        CALL TWOUT
C EQLINE CALCULATES THE EQUIPOTENTIALS
          CALL EQLINE
 4        RETURN
 100      FORMAT(16H0     POINT NO.= I5,5X10HVOLTAGE = F15.5)
 101      FORMAT(39H1  NO SPACE-CHARGE - LAPLACE SOLUTION   )
 102      FORMAT(31H0I CANNOT GET OUT OF THE LOOP    )
 104      FORMAT(34H0ITERATION NO./POINT/ERROR/EPSILON  I3,I5,2F15.6)
      END(1,1,0,0,0,0,1,0,0,0,0,0,0,0,0)
```

APPENDIX B

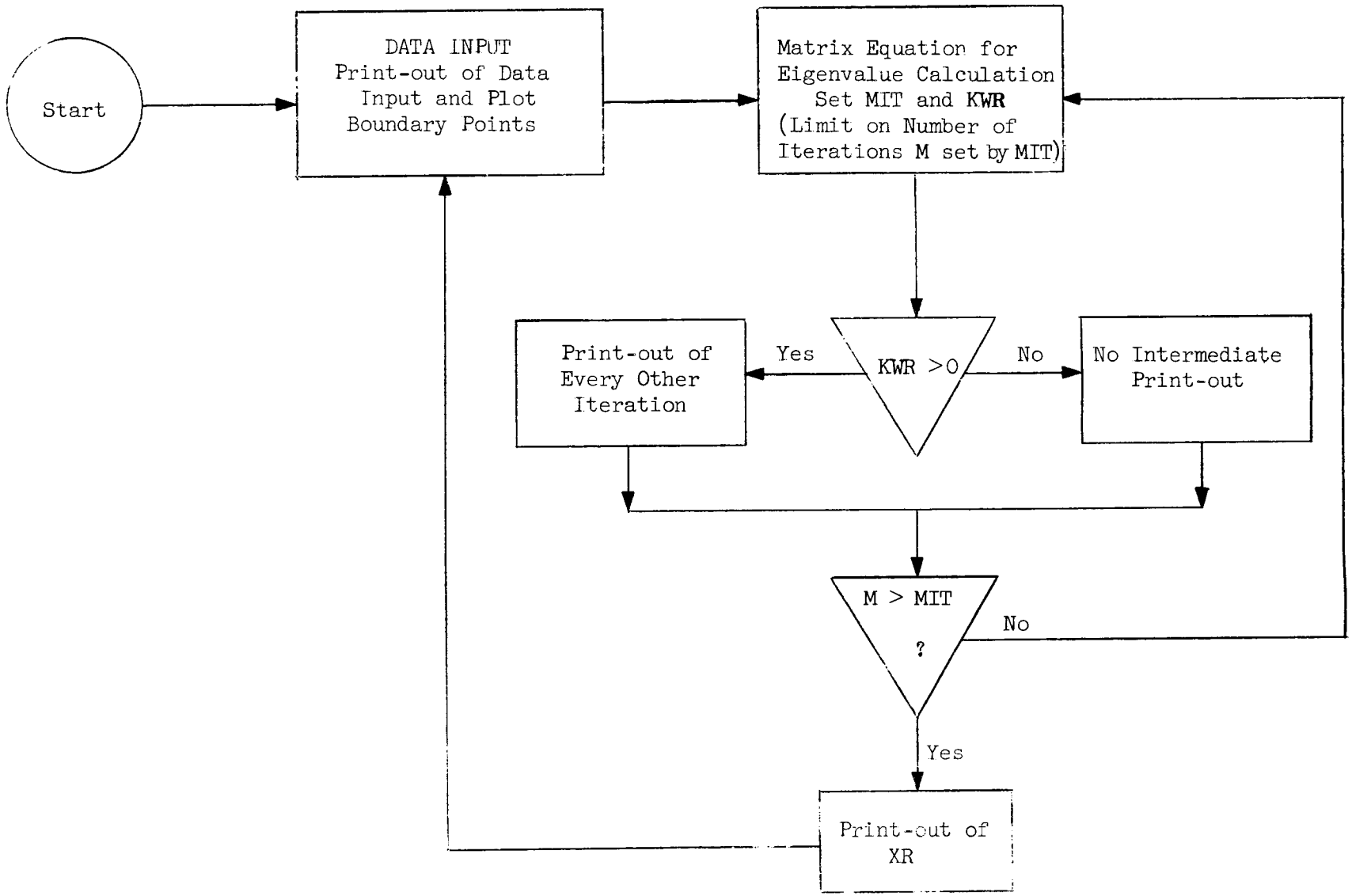

Flow Chart for XR-Calculation

```
CSPACE-CHARGE SOLUTION.VLAD HAMZA MICROWAVE LABORATORY.
C     THIS SUBROUTINE IS GOOD FOR XR-CALCULATION ONLY
C     XR  IS THE LARGEST EIGENVALUE OF THE MATRIX
      COMMON URH,UB,JT,RH,U,XT,KT,LINC,XR,NTOP,NUL,NLIN,ARCL,EQX,EQY,
     1   NPIT,XEP,NXEP,CU,LINC1,AX,AY,VX,VY,DX,DELY,YEP,XQM,H,KISW,ETX,
     2   ETY,PTY,PTX,NAJ,NTJ,VA,VB,VC,NCOOR,KCH,HSL,XLSL,EPS,NPOT,
     3   IDEC,JOT,NSPAN,RX,NRL,KRL,KRH,VAT,VBT,SIZE,KRT,RHUP,RHDOWN,
     4   XCU,NOT,MO,KCY,NSWP,ATX,ATY,LINC2,NXF,NYF,NURL,NJOT,XEMIT,
     5   IXO,HGH,XLOW,XMPR,NEM,A,X,JDY,AXX,BXX,CXX,DXX,NDIM,VD,VTH,
     6   VTHX,VTHY, YAXS, NFUL
         DIMENSION KRT(2),JT(4000),RH(4000),
     1   U(4000),XT(4000),KT(5),LINC(150),LINC1(150),LINC2(150),
     2   A(180),X(60),CU(40),VX(40),VY(40),KCH(40),AX(40),AY(40),
     3   ATX(40),ATY(40),ETX(40),ETY(40),XCU(40),KCY(10),PTX(60),
     4   PTY(60)
         DIMENSION ND(3),KRTX(10),KRTY(10),WOLT(28)
 200  MO=1
      READ INPUT TAPE 5,100,NH
      DO 13 J=1,NH
      READ INPUT TAPE 5,107
 13   WRITE OUTPUT TAPE 6,107
         READ INPUT TAPE 5,100,NXF,NYF,NEM,NTJ,NDIM,NRL,NUL,NURL,
     1NCOOR, IDEC, NFUL, NCO, KRHX, KRHY
      JDY = NYF
         WRITE OUTPUT TAPE  6,108
 108  FORMAT(5H0 NXF,5H  NYF,5H  NEM,5H  NTJ,5H NDIM,5H  NRL,5H  NUL,
     15H NURL,5HNCOOR,5H IDEC,5H NFUL,5H  NCO,5H KRHX,5H KRHY)
         WRITE OUTPUT TAPE 6,310,NXF,NYF,NEM,NTJ,NDIM,NRL,NUL,NURL,
     1   NCOOR,IDEC,NFUL, NCO, KRHX, KRHY
         READ INPUT TAPE 5,300,IXO,NSPAN,NPOTX,NPOTY, YAXS
         WRITE OUTPUT TAPE  6,109
 109  FORMAT(5H0 IXO,5HNSPAN,5HNPOTX,5HNPOTY, 8H    YAXS)
         WRITE OUTPUT TAPE 6,311,IXO,NSPAN,NPOTX,NPOTY, YAXS
         READ INPUT TAPE 5,100,NRTN,(KRTX(K),KRTY(K),K=1,NRTN)
         WRITE OUTPUT TAPE  6,110
 110  FORMAT(5H0KRTN,5H KRTX,5H KRTY,5H KRTX,5H KRTY,5H KRTX,5H KRTY)
         WRITE OUTPUT TAPE 6,310,NRTN,(KRTX(K),KRTY(K),K=1,NRTN)
      READ INPUT TAPE 5,102,VAT,VBT,SIZE,VA,VB,VC
         WRITE OUTPUT TAPE  6,111
 111  FORMAT(4X3HVAT,7X3HVBT,6X4HSIZE,7X2HVA,8X2HVB,8X2HVC)
      WRITE OUTPUT TAPE 6,302,VAT,VBT,SIZE,VA,VB,VC
      READ INPUT TAPE 5,102,HGH,XLOW,HSL,XLSL,VD
         WRITE OUTPUT TAPE  6,112
 112  FORMAT(4X3HHGH,6X4HXLOW,6X3HHSL,7X4HXLSL,7X2HVD)
      WRITE OUTPUT TAPE 6,302,HGH,XLOW,HSL,XLSL,VD
      READ INPUT TAPE 5,102,AXX,BXX,CXX,DXX,XR
         WRITE OUTPUT TAPE  6,113
 113  FORMAT(4X3HAXX,7X3HBXX,7X3HCXX,7X3HDXX,7X2HXR)
      WRITE OUTPUT TAPE 6,302,AXX,BXX,CXX,DXX,XR
      READ INPUT TAPE 5,8,RO,EPS,XEMIT,H
         WRITE OUTPUT TAPE  6,114
 114  FORMAT(7X2HRO,10X7HEPSILON,9X5HXEMIT,6X13HMESH SIZE - H)
      WRITE OUTPUT TAPE 6, 308, RO, EPS, XEMIT,H
      READ INPUT TAPE 5,105,YEP,XQM,ATOM,VTH,VTHX,VTHY
         WRITE OUTPUT TAPE  6,115
```

```
115  FORMAT(12X6HEPSNOT,6X3HXQM,6X4HATOM,6X3HVTH,7X4HVTHX,6X4HVTHY)
     WRITE OUTPUT TAPE 6,105,YEP,XQM,ATOM,VTH,VTHX,VTHY
     READ INPUT TAPE 5,102,(ATX(J),ATY(J),J=1,NEM)
        WRITE OUTPUT TAPE 6,119
119  FORMAT(31H0            CATHODE  COORDINATES)
     WRITE OUTPUT TAPE 6,302,(ATX(J),ATY(J),J=1,NEM)
     READ INPUT TAPE 5,100,(KCY(J),J=1,10)
        WRITE OUTPUT TAPE 6,120
120  FORMAT(33H0            PRINT-OUT OF CYCLE NO.)
     WRITE OUTPUT TAPE 6,100,(KCY(J),J=1,10)
     READ INPUT TAPE 5,104,(WOLT(NN),NN=1,28)
        WRITE OUTPUT TAPE  6,116
116  FORMAT(8H0 VOLT-1,7X2H-2,8X2H-3,8X2H-4,8X2H-5,8X2H-6,8X2H-7)
     WRITE OUTPUT TAPE 6,304,(WOLT(NN),NN=1,28)
     HH=H**2                                                          E25
     HT=.5*H
     H2=2.*H
     XMPR=.5*(FLOATF(NXF*NYF))**2/FLOATF(NXF**2+NYF**2)
     XQM=XQM/ATOM
        RX = H/YEP
     J=1
     IF (NDIM-2) 1001,1001,2005
1001 DO 1002 I=1,NYF
        IF (I-1) 1006,1006,1007
1006    XT(J+3) = 0.0
        XT(J+5) = -0.5
        GO TO 1008
1007    IF (I-NYF) 1003,1005,1003
1005    XT(J+3) = -0.5
        XT(J+5) = 0.0
      GO TO  1008
1003    XT(J+3) = -0.25
        XT(J+5) = -0.25
1008    XT(J)   = 0.25
        XT(J+1) = 0.25
        XT(J+2) = 0.25
        XT(J+4) = 1.0
1002    J = J+6
     GO TO 2011
2005 DO 2010 I=1,NYF
     RP= FLOATF(NYF-I)*H+RO
        IF (I-1) 1009,1009,1010
1009    XT(J+3) = 0.0
        XT(J+5) = -2.0*RP
        GO TO 1011
1010    IF (RP) 2009,2008,2009
2009    XT(J+5) = -(RP-HT)
        XT(J+3) = -(RP+HT)
1011    XT(J)   = 1.0
        XT(J+1) = RP
        XT(J+2) = RP
        XT(J+4) = 4.0*RP
     GO TO 2010                                                       65A
2008 XT(J)= .125
     XT(J+1)=.125* H
     XT(J+2)=.125*H
```

```
      XT(J+3)=-.50    * H
      XT(J+4)=.75 *H
      XT(J+5)=0.                                                        71A
2010     J = J + 6
2011 NDD = 1
      NSS=2
      NTRIP=0
      NPONT=NYF
      KRH=(KRHX-1)*NPONT+KRHY
      NTOP=NPONT*NXF
      KRT(1)=NRTN
      I=2
      DO 2 K=1,NRTN
      KRT(I)=(KRTX(K)-1)*NPONT+KRTY(K)
    2 I=I+1
      KT(1)=-NPONT                                                      S77
      KT(2)=NPONT                                                       S78
      KT(3)=-1                                                          S79
      KT(4)=0                                                           S80
      KT(5)=+1                                                          S81
         WRITE OUTPUT TAPE 6,117
117      FORMAT(41H0      BOUNDARY POINTS OF ELECTRODE SHAPE )
         CALL PLOT (0.0,VC,-3)
      DO 2020 NX=1,NXF
      DO 2020 NY=1,NYF
      IF (NTRIP) 2030,2040,2030
2040 READ INPUT TAPE 5,2035,NS,(ND(I),I=1,3),NXC,NYC,HEW,HNS,NVOLT,
     1   NVOLT1,NCHECK
2035     FORMAT (1H 4I1,2I4,2F6.3,2I5,I4)
      WRITE OUTPUT TAPE 6,2035,NS,(ND(I),I=1,3),NXC,NYC,HEW,HNS,NVOLT,
     1   NVOLT1,NCHECK
         IF (HNS) 2031, 2032, 2031
2031     XXX=FLOATF(NXC-1)*H*VD
         YYY=-(FLOATF(NYC-1)-HNS)*H*VD
         CALL SYMBOL (XXX,YYY,0.07, 12,0.0,1)
2032     IF (HEW) 2033, 2034, 2033
2033     XXX=(FLOATF(NXC-1)+HEW)*H*VD
         YYY=-FLOATF(NYC-1)*H*VD
         CALL SYMBOL (XXX,YYY,0.07, 12,0.0,1)
         GO TO  2036
2034     IF (HNS) 2036, 2037, 2036
2037     XXX=FLOATF(NXC-1)*H*VD
         YYY=-FLOATF(NYC-1)*H*VD
         CALL SYMBOL (XXX,YYY,0.07, 12,0.0,1)
2036     NTRIP = 1
      KC=  NPONT*(NXC-1)+NYC
2030 K=   NPONT*(NX-1)+NY
      IF (K-KC) 2060,2050,2060
2060 IF (NSS-1) 2070,2070,2080
2070     IF (NY-NYF) 2071,2072,2071
2072     NSS = 2
         JT(K) = 1 + 6*(NY-1)
         VOLT1= FLOATF((NXF-NX)/NXF)*VA
         GO TO 2310
2071     JT(K) = 1 + 6*(NY-1)
      GO TO 2020
```

```
2080     JT(K) = 9999
      IF (NX-NCO) 2081,2020,2020
2081     IF (U(K)) 2020,2084,2020
2084     U(K) = VA
      GO TO  2020
2050 NTRIP = 0
      NSS=NS
      VOLT = WOLT(NVOLT)
         VOLT1 = WOLT(NVOLT1)
         HEW = HEW*H
         HNS=HNS*H
         IF (ND(3)) 2052,2052,2053
2052     VOLT1 = VOLT
2053     HN =  H
      HS     = H
      HE     = H
      HW     = H
      KE = K+NPONT
      KW = K-NPONT
      KN=K-1
      KS=K+1
      JT(K)=J
      IF (HEW) 2090,2200,2100
2090     HW = - HEW
      U(KW)    = VOLT
      GO TO 2200
2100     HE = HEW
      U(KE)    = VOLT
2200 IF (HNS) 2210,2230,2220
2210     HS = - HNS
      U(KS)    = VOLT1
      GO TO 2230
2220     HN = HNS
      U(KN)    = VOLT1
2230 IF (NDIM-2) 1004,1004,2239
1004 XT(J) = ((HN+HS)*(HE+HW))/(16.*HH)
      XT(J+1) = (HN+HS)/(8.*HW)
      XT(J+2) =  (HN+HS)/(8.*HE)
      XT(J+3) = -(HE+HW)/(8.*HN)
      XT(J+5) = - (HE+HW)/(8.*HS)
      XT(J+4) = XT(J+1)+XT(J+2)-XT(J+3)-XT(J+5)
      GO TO 2233
2239 RP=  (FLOATF(NPONT-NY))*H+RO
      IF(RP)2231,2232,2231                                          134
2231 XT(J)= (HE+HW)*(HN+HS)/(4.*HH)
      XT(J+1)=((HN+HS)/(2.*HW))*(RP+((HN-HS)/4.))                   135A
      XT(J+2)=HW*XT(J+1)/HE
      XT(J+3)=-((HW+HE)/(2.*HN))*(RP+(HN/2.))
      XT(J+5)=-((HW+HE)/(2.*HS))*(RP-(HS/2.))
      XT(J+4)=XT(J+1)+XT(J+2)-XT(J+3)-XT(J+5)
      GO TO 2233                                                    141A
2232 XT(J)= (HE+HW)*(HN/(16.*HH) )
      XT(J+1)=(HN/(8.*HW) )*H
      XT(J+2) = H* HN/(8.*HE)
      XT(J+3) = - H*(HE+HW)/(4.*HN)
      XT(J+4)=(HN/8.* ((HW+HE)/(HW*HE))+(HE+HW)/(4.*HN) )*H
```

```
      XT(J+5)=-0.
 2233 DO 2300 I=1,2                                                    141
      NDA= ND(I)+1
      GO TO (2300,2240,2250,2260,2270),NDA
 2240 XT(J+1) = XT(J+1)+ XT(J+2)
      XT(J+2) = 0.0
         GO TO 2300
 2250 XT(J+5) = XT(J+5) +XT(J+3)
      XT(J+3) = 0.0
         GO TO 2300
 2260 XT(J+2) =XT(J+2) +XT(J+1)
      XT(J+1) =0.0
         GO TO 2300
 2270 XT(J+3) =XT(J+3) +XT(J+5)
      XT(J+5) =0.0
 2300 CONTINUE
         IF (ND(3)) 2310,2310,2311
 2311    XT(J) = 0.25
         XT(J+1) = 0.
         XT(J+2) = XLSL
         XT(J+3) = 0.
         XT(J+4) = 1.
         XT(J+5) = XLSL - 1.
 2310 IF (NSS-1) 2320,2330,2340
 2330 LINC1(NDD)=K
      VUP        = VOLT1
      XT(J+3)    =-XT(J+3)
      GO TO 2320
 2340 LINC2(NDD)=K
      LINC (NDD)= 2*XMODF(NX,2) -1
      VDOWN      = VOLT1
      KB=LINC1(NDD)
      DO 2350 KK=KB,K
 2350 U(KK)= VUP +(VDOWN-VUP)*FLOATF(KK-KB)/FLOATF(K-KB)
      XT(J+5)= -XT(J+5)
      NDD=NDD+1
 2320    J = J + 6
 2020 CONTINUE
      NLIN=NDD-1
      IF (NCHECK - 1) 4000,502,4000
 4000 WRITE OUTPUT TAPE 6,4001
 4001 FORMAT (24HOERROR IN BOUNDARY POINT)
      CALL EXIT
  502   CALL MATIN
        XMAX = FLOATF(NXF-1)*H*VD + 3.0
        CALL PLOT (XMAX, -VC, -3)
         GO TO 200
    8 FORMAT (4F15.8)
 100     FORMAT(14I5)
 101     FORMAT(6I5)
 102     FORMAT(6F10.4)
 103     FORMAT(13I5)
 104     FORMAT(7F10.4)
 105  FORMAT(10X6E10.5)
 106     FORMAT(3F10.5)
 107     FORMAT(72H
```

```
    1
300 FORMAT(4I5, F10.6)
302 FORMAT(1H 6F10.4)
304 FORMAT(1H 7F10.4)
308 FORMAT(1H 4F15.8)
310 FORMAT(1H 14I5)
311 FORMAT(1H 4I5, F10.6)
    END(1,0,0,0,0,0,1,0,0,0,0,0,0,0,0)
```

MATIN CALCULATES THE EIGENVALUE

```
          SUBROUTINE MATIN
CSPACE-CHARGE SOLUTION.VLAD HAMZA MICROWAVE LABORATORY.
      COMMON URH,UB,JT,RH,U,XT,KT,LINC,XR,NTOP,NUL,NLIN,ARCL,EQX,EQY,
     1   NPIT,XEP,NXEP,CU,LINC1,AX,AY,VX,VY,DX,DELY,YEP,XQM,H,KISW,ETX,
     2   ETY,PTY,PTX,NAJ,NTJ,VA,VB,VC,NCOOR,KCH,HSL,XLSL,EPS,NPOT,
     3   IDEC,JOT,NSPAN,RX,NRL,KRL,KRH,VAT,VBT,SIZE,KRT,RHUP,RHDOWN,
     4   XCU,NOT,MO,KCY,NSWP,ATX,ATY,LINC2,NXF,NYF,NURL,NJOT,XEMIT,
     5   IXO,HGH,XLOW,XMPR,NEM,A,X,JDY,AXX,BXX,CXX,DXX,NDIM,VD,VTH,
     6   VTHX,VTHY
          DIMENSION KRT(2),JT(4000),RH(4000),URH(4000),
     1   U(4000),XT(4000),KT(5),LINC(150),LINC1(150),LINC2(150),
     2   A(180),X(60),CU(40),VX(40),VY(40),KCH(40),AX(40),AY(40),
     3   ATX(40),ATY(40),ETX(40),ETY(40),XCU(40),KCY(10),PTX(60),
     4   PTY(60)
          READ INPUT TAPE 5,102,MIT,KWR
      WRITE OUTPUT TAPE 6,102,MIT,KWR
C MIT=NUMBER OF ITERATIONS ON EIGENVALUE CALCULATION
C KWR=- OR 0,NO INTERMEDIATE OUTPUT
C KWR=+,PRINT INTERMEDIATE ITERATIONS ON EIGENVALUE CALCULATION
C COLUMN VECTOR INITIALIZED
 50       DO 46 J=1,NTOP
      IF(JT(J)-9999)44,43,43
 43   URH(J)=0.
          U(J) = 0.0
          GO TO 46
 44   URH(J)=1.
          U(J) = 0.0
 46       CONTINUE
          JS=-1
C ITERATIVE LOOP
          DO 41 M=1,MIT
C LOOP ON NUMBER OF LINES
          DO 31 NL=1,NLIN
          IF(LINC(NL)) 23,31,23
 23   KB=LINC1(NL)
      KC=LINC2(NL)
          JV=1
          JU=1
          DO 13 K=KB,KC
          SUM=0.
          JZ=JT(K)
 14       DO 15 JY=3,5
          JX=JZ+JY
          A(JU)=XT(JX)
 15       JU=JU+1
          DO 16 JY=1,2
          JX=JZ+JY
      JW=K+KT(JY)
 16   SUM=SUM+XT(JX)*URH(JW)
          X(JV)=SUM
          JV=JV+1
 13       CONTINUE
          N=KC-KB+1
          CALL MATRIX(N,A(2),X)
C MATRIX IS USED FOR THE FORWARD AND BACK SUBSTITUTION
```

MATIN CALCULATES THE EIGENVALUE

```
          JV=1
          DO 17 J=KB,KC
          RH(J)=X(JV)
 17       JV=JV+1
 31       CONTINUE
C SWITCH ALLOWING MATRIX TO BE APPLIED TWICE
          IF(JS) 32,34,34
 32       DO 33 J=1.NTOP
      U(J) = URH(J)
 33   URH(J)=RH(J)
          GO TO 41
C DETERMINATION OF SMALLEST AND LARGEST RATIOS FOR EIGENVALUE
 34       XL=0.
          XS=1.
          DO 39 JD=1,NTOP
      IF(URH(JD))39,39,35
 35       X = RH(JD)/U(JD)
          IF(XL-X)36,37,37
 36       XL=X
          NNL=JD
 37       IF(XS-X)39,39,38
 38       XS=X
          NS=JD
 39       CONTINUE
          IF(KWR) 51,51,52
 52       WRITE OUTPUT TAPE 6,101,M,XS,XL,NS,NNL
 51       YL=RH(NNL)
          DO 40 JD=1,NTOP
 40   URH(JD)=RH(JD)/YL
          IF(XL-XS-5.0E-03)42,42,41
 41       JS=-JS
 42       XR=SQRTF(.5*(XL+XS))
          WRITE OUTPUT TAPE 6,103,XR
 47       RETURN
 101      FORMAT(20H    LOW    HIGH        I5,2F13.8,5H       2I6)
 102      FORMAT(14I5)
 103      FORMAT(4HOXR= F10.8)
      END(1,1,0,0,0,0,1,0,0,0,0,0,0,0,0)
```

APPENDIX C

DETAILED FLOW CHARTS

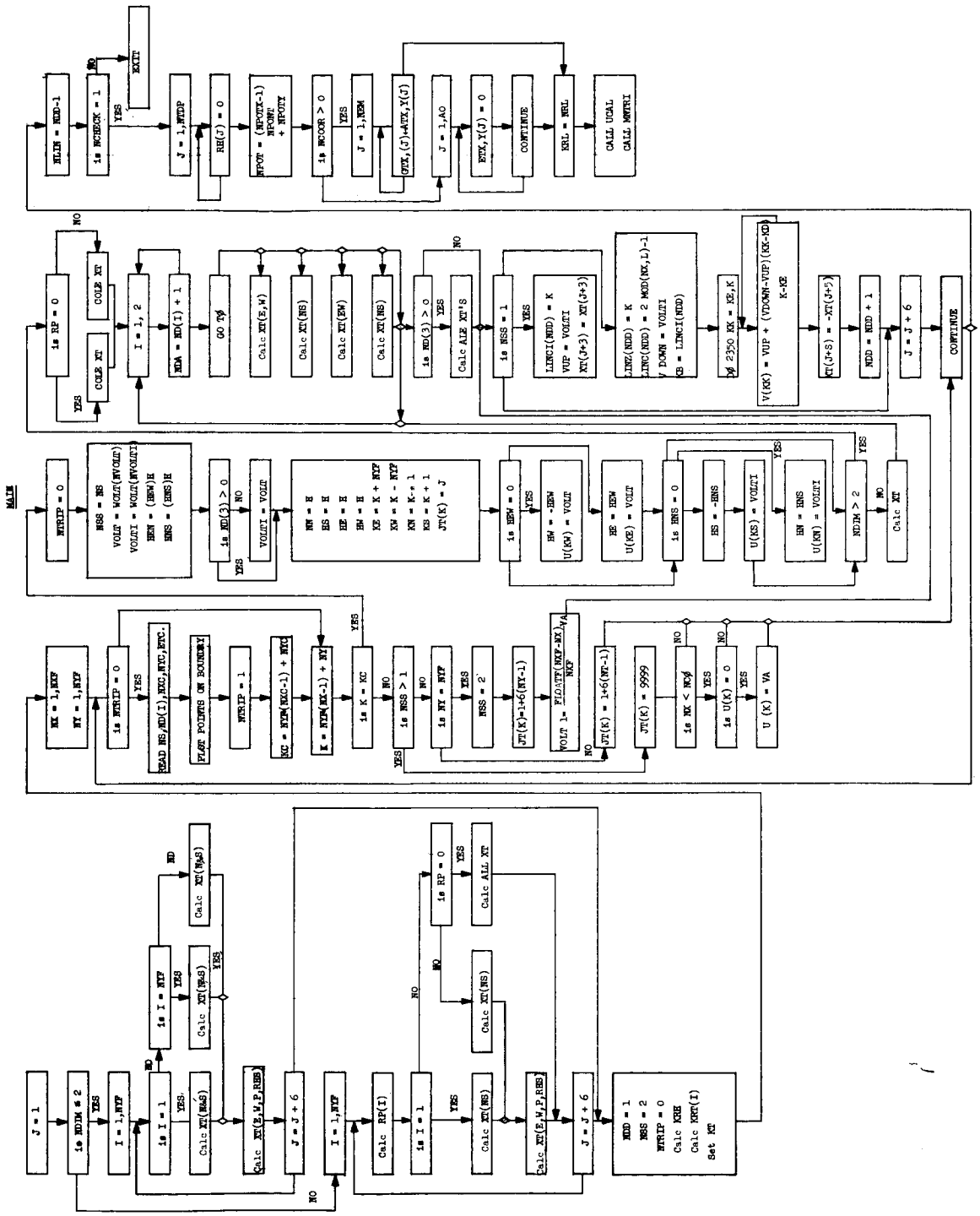

NOTE: For convenience, two forms of subscript notation are used in the flow diagrams in this Appendix. The first is the usual algebraic notation, for example, ND_J , and the second employs parentheses, for example ND(J) .

ARC

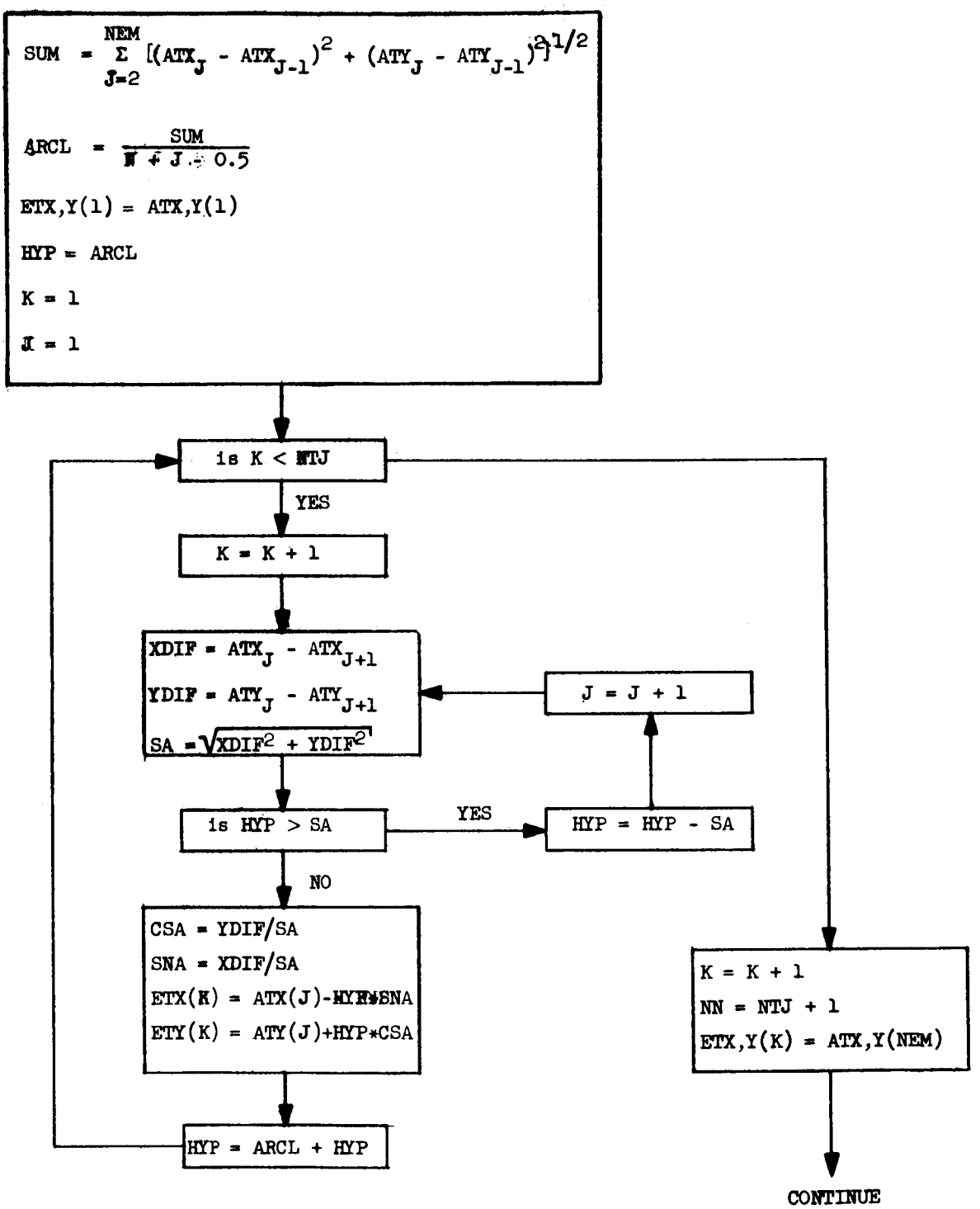
SUM = Σ [(ATX_J - ATX_J-1)^2 + (ATY_J - ATY_J-1)^2]^1/2
ARCL = SUM / NTJ + 0.5
ETX,Y(1) = ATX,Y(1)
HYP = ARCL
K = 1
J = 1
is K < NTJ
YES
K = K + 1
XDIF = ATX_J - ATX_J+1
YDIF = ATY_J - ATY_J+1
SA = √(XDIF^2 + YDIF^2)
J = J + 1
is HYP > SA
YES
HYP = HYP - SA
NO
CSA = YDIF/SA
SNA = XDIF/SA
ETX(K) = ATX(J)-HYP*SNA
ETY(K) = ATY(J)+HYP*CSA
HYP = ARCL + HYP
K = K + 1
NN = NTJ + 1
ETX,Y(K) = ATX,Y(NEM)
CONTINUE

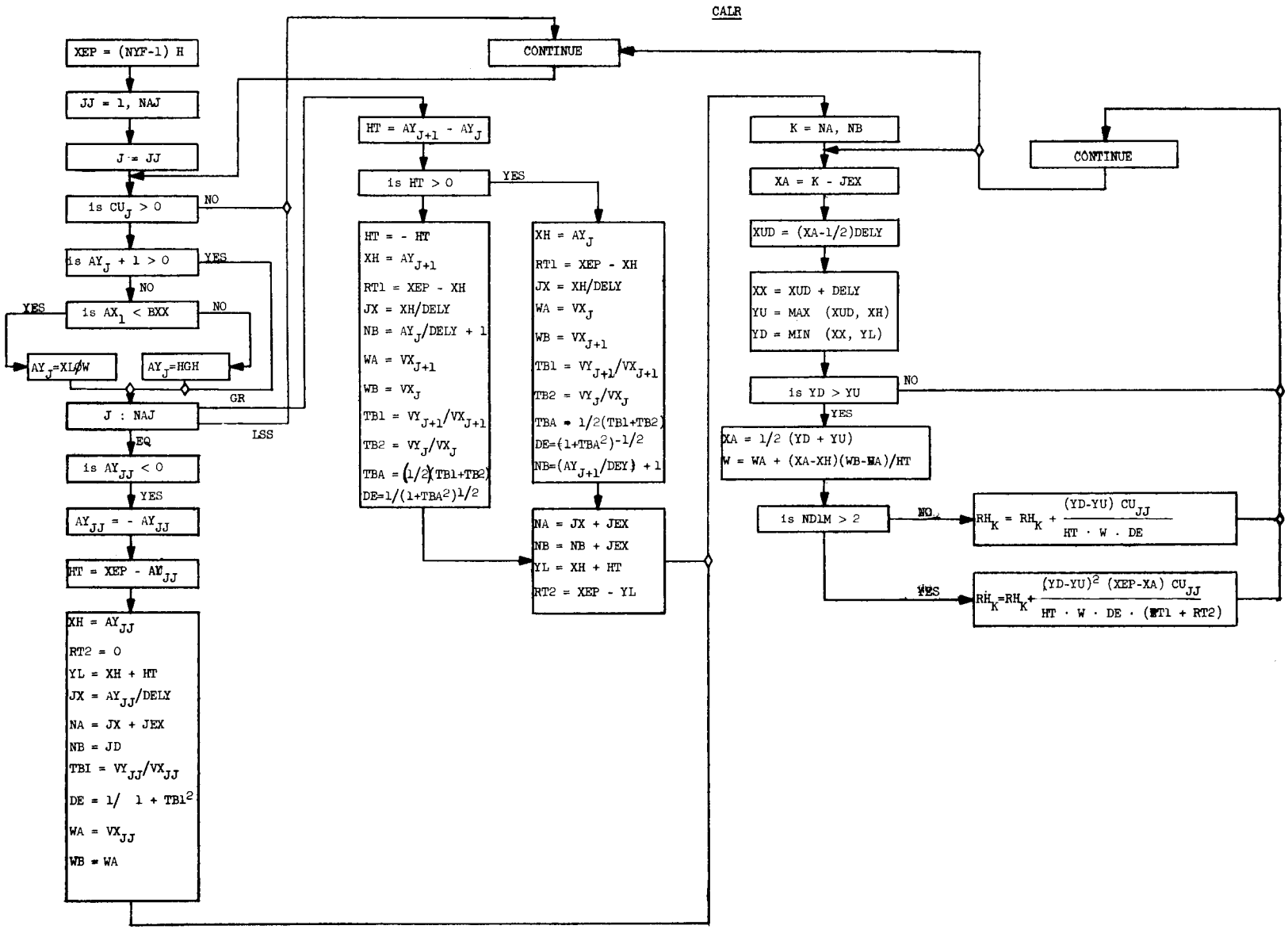
CALR
XEP = (NYF-1) H
JJ = 1, NAJ
J = JJ
is CU_J > 0
NO
is AY_J + 1 > 0
YES
NO
is AX_1 < BXX
YES
NO
AY_J=XLØW
AY_J=HGH
J : NAJ
GR
LSS
EQ
is AY_JJ < 0
YES
AY_JJ = - AY_JJ
HT = XEP - AY_JJ
XH = AY_JJ
RT2 = 0
YL = XH + HT
JX = AY_JJ/DELY
NA = JX + JEX
NB = JD
TBI = VY_JJ/VX_JJ
DE = 1/ 1 + TB1^2
WA = VX_JJ
WB = WA
CONTINUE
HT = AY_J+1 - AY_J
is HT > 0
YES
HT = - HT
XH = AY_J+1
RT1 = XEP - XH
JX = XH/DELY
NB = AY_J/DELY + 1
WA = VX_J+1
WB = VX_J
TB1 = VY_J+1/VX_J+1
TB2 = VY_J/VX_J
TBA = (1/2)(TB1+TB2)
DE=1/(1+TBA^2)^1/2
XH = AY_J
RT1 = XEP - XH
JX = XH/DELY
WA = VX_J
WB = VX_J+1
TB1 = VY_J+1/VX_J+1
TB2 = VY_J/VX_J
TBA = 1/2(TB1+TB2)
DE=(1+TBA^2)-1/2
NB=(AY_J+1/DEY) + 1
NA = JX + JEX
NB = NB + JEX
YL = XH + HT
RT2 = XEP - YL
K = NA, NB
XA = K - JEX
XUD = (XA-1/2)DELY
XX = XUD + DELY
YU = MAX (XUD, XH)
YD = MIN (XX, YL)
is YD > YU
NO
YES
XA = 1/2 (YD + YU)
W = WA + (XA-XH)(WB-WA)/HT
is ND1M > 2
NO
RH_K = RH_K + (YD-YU) CU_JJ / HT · W · DE
YES
RH_K=RH_K+ (YD-YU)^2 (XEP-XA) CU_JJ / HT · W · DE · (RT1 + RT2)
CONTINUE

CORRCT

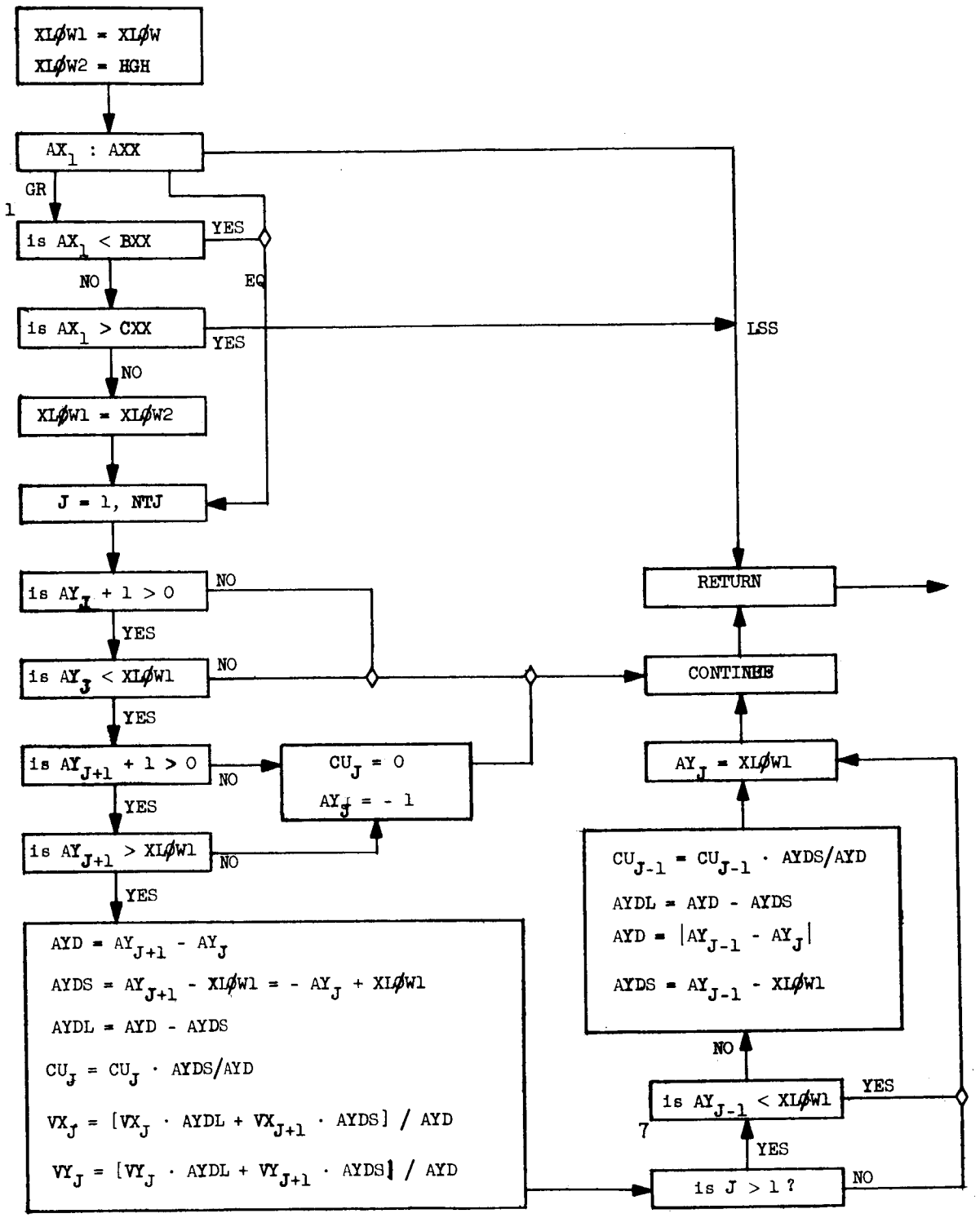
XLØW1 = XLØW
XLØW2 = HGH
AX1 : AXX
GR
1
is AX1 < BXX
YES
NO
EQ
is AX1 > CXX
YES
LSS
NO
XLØW1 = XLØW2
J = 1, NTJ
is AYJ + 1 > 0
NO
YES
is AYJ < XLØW1
NO
YES
is AYJ+1 + 1 > 0
NO
CUJ = 0
AYJ = - 1
YES
is AYJ+1 > XLØW1
NO
YES
AYD = AYJ+1 - AYJ
AYDS = AYJ+1 - XLØW1 = - AYJ + XLØW1
AYDL = AYD - AYDS
CUJ = CUJ · AYDS/AYD
VXJ = [VXJ · AYDL + VXJ+1 · AYDS] / AYD
VYJ = [VYJ · AYDL + VYJ+1 · AYDS] / AYD
RETURN
CONTINUE
AYJ = XLØW1
CUJ-1 = CUJ-1 · AYDS/AYD
AYDL = AYD - AYDS
AYD = |AYJ-1 - AYJ|
AYDS = AYJ-1 - XLØW1
NO
is AYJ-1 < XLØW1
YES
7
YES
is J > 1 ?
NO

EQLINE

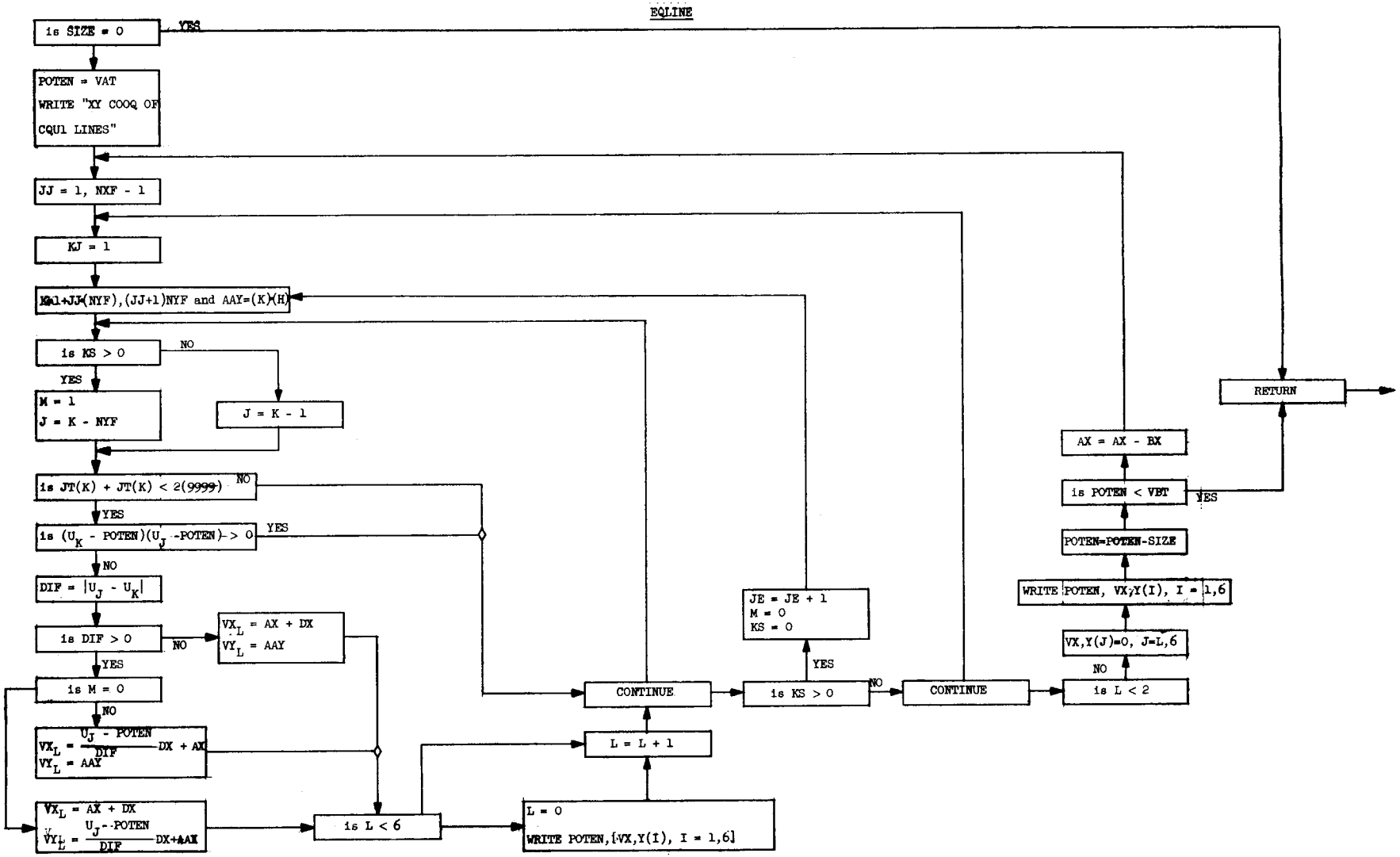
is SIZE = 0
YES
POTEN = VAT
WRITE "XY COOQ OF
CQU1 LINES"
JJ = 1, NXF - 1
KJ = 1
K=1+JJ(NYF),(JJ+1)NYF and AAY=(K)(H)
is KS > 0
NO
YES
M = 1
J = K - NYF
J = K - 1
is JT(K) + JT(K) < 2(9999)
NO
YES
is (U_K - POTEN)(U_J -POTEN) -> 0
YES
NO
DIF = |U_J - U_K|
is DIF > 0
NO
VX_L = AX + DX
VY_L = AAY
YES
is M = 0
NO
VX_L = (U_J - POTEN)/DIF DX + AX
VY_L = AAY
VX_L = AX + DX
VY_L = (U_J - POTEN)/DIF DX+AAX
is L < 6
L = 0
WRITE POTEN,[VX,Y(I), I = 1,6]
L = L + 1
CONTINUE
JE = JE + 1
M = 0
KS = 0
YES
is KS > 0
NO
CONTINUE
is L < 2
NO
VX,Y(J)=0, J=L,6
WRITE POTEN, VX,Y(I), I = 1,6
POTEN=POTEN-SIZE
is POTEN < VBT
YES
AX = AX - BX
RETURN

MATRIX

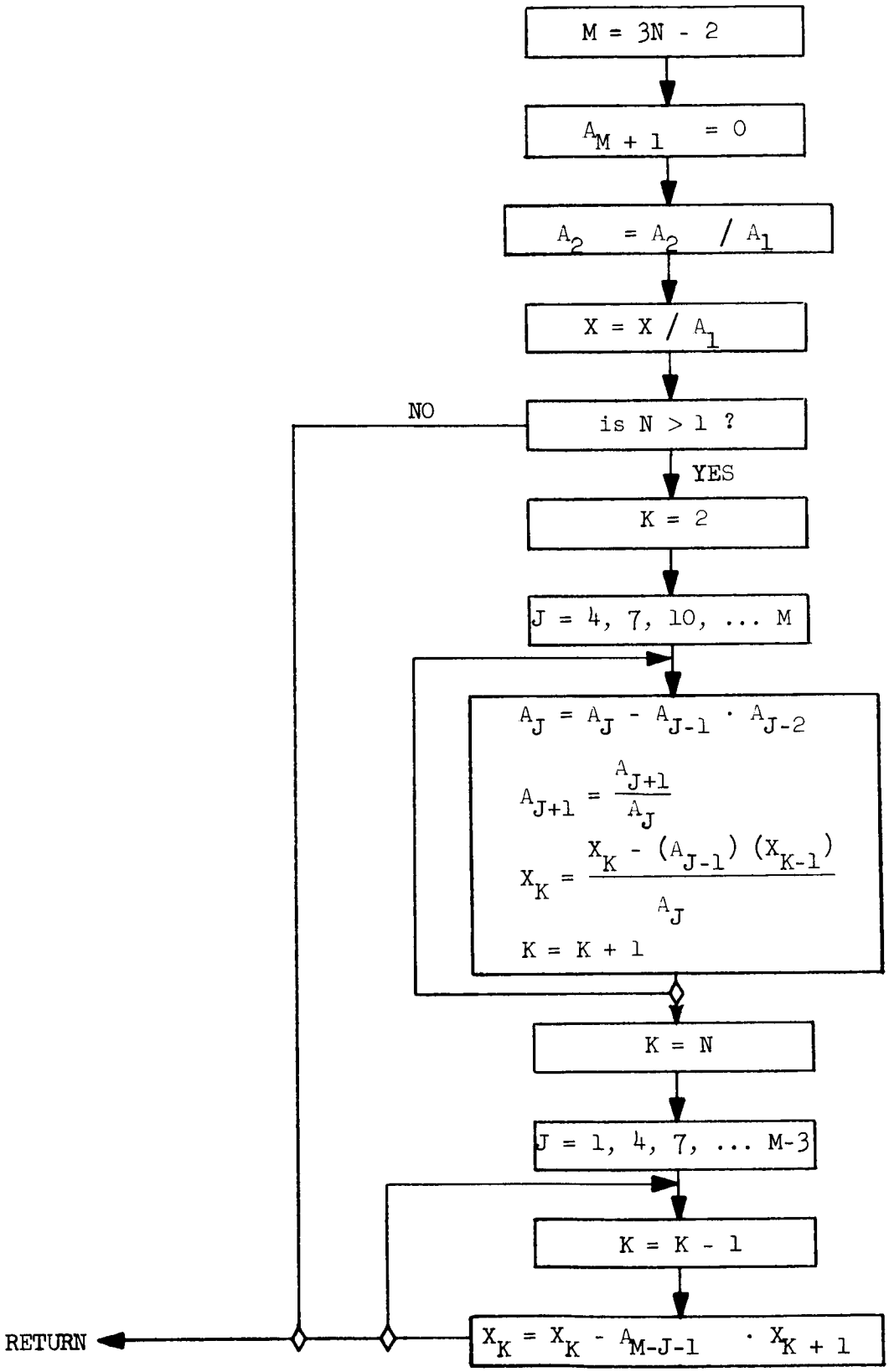
M = 3N - 2
A M + 1 = 0
A2 = A2 / A1
X = X / A1
is N > 1 ?
NO
YES
K = 2
J = 4, 7, 10, ... M
AJ = AJ - AJ-1 · AJ-2
AJ+1 = AJ+1 / AJ
XK = XK - (AJ-1) (XK-1) / AJ
K = K + 1
K = N
J = 1, 4, 7, ... M-3
K = K - 1
XK = XK - AM-J-1 · XK + 1
RETURN

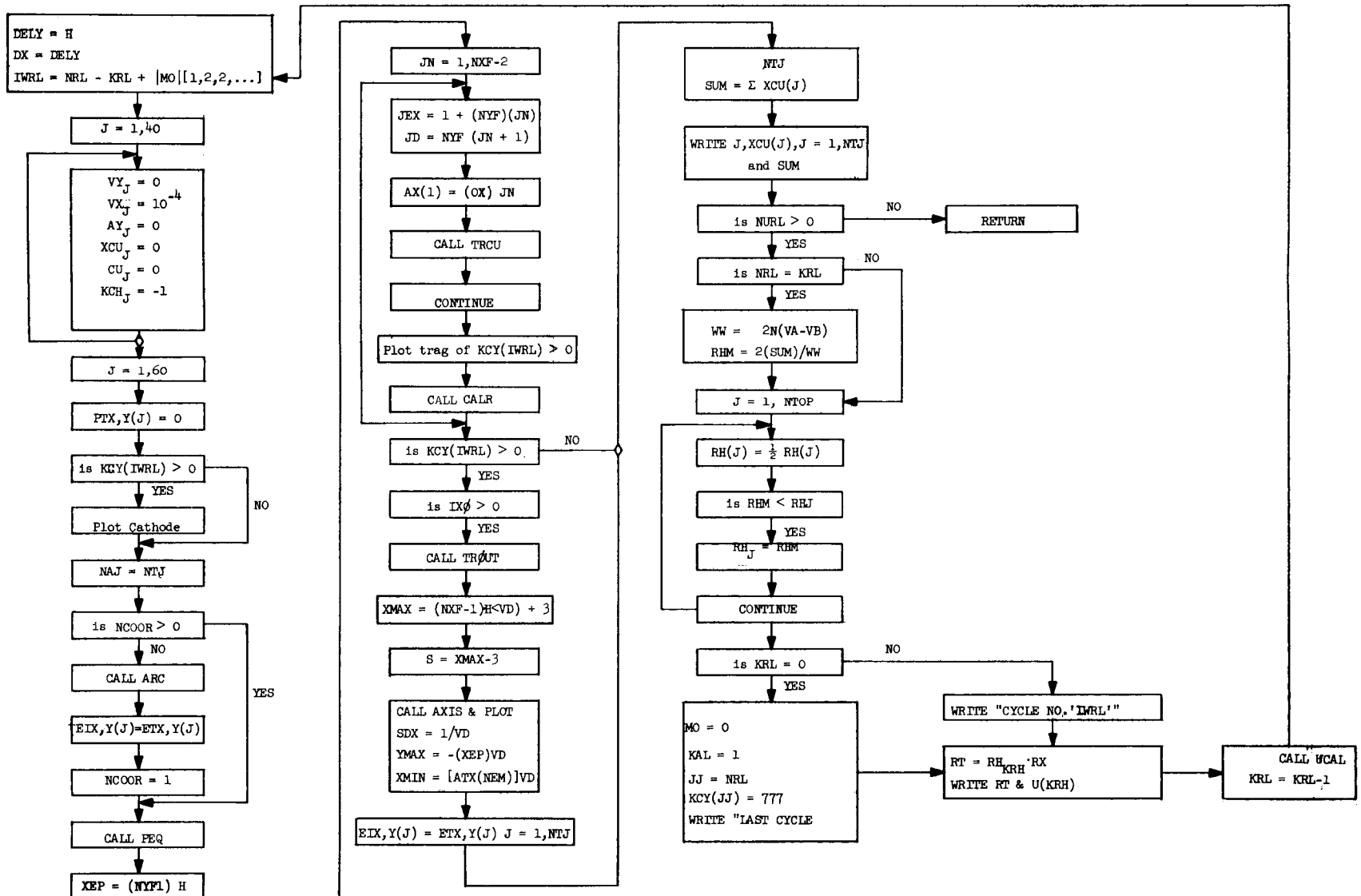
DELY = H
DX = DELY
IWRL = NRL - KRL + |MO|[1,2,2,...]
J = 1,40
VY_J = 0
VX_J = 10^-4
AY_J = 0
XCU_J = 0
CU_J = 0
KCH_J = -1
J = 1,60
PTX,Y(J) = 0
is KCY(IWRL) > 0
YES
NO
Plot Cathode
NAJ = NTJ
is NCOOR > 0
NO
YES
CALL ARC
ETX,Y(J)=ETX,Y(J)
NCOOR = 1
CALL PEQ
XEP = (NYF1) H
JN = 1,NXF-2
JEX = 1 + (NYF)(JN)
JD = NYF (JN + 1)
AX(1) = (OX) JN
CALL TRCU
CONTINUE
Plot trag of KCY(IWRL) > 0
CALL CALR
is KCY(IWRL) > 0
NO
YES
is IXØ > 0
YES
CALL TRØUT
XMAX = (NXF-1)H<VD) + 3
S = XMAX-3
CALL AXIS & PLOT
SDX = 1/VD
YMAX = -(XEP)VD
XMIN = [ATX(NEM)]VD
ETX,Y(J) = ETX,Y(J) J = 1,NTJ
NTJ
SUM = Σ XCU(J)
WRITE J,XCU(J),J = 1,NTJ
and SUM
is NURL > 0
NO
RETURN
YES
is NRL = KRL
NO
YES
WW = 2N(VA-VB)
RHM = 2(SUM)/WW
J = 1, NTOP
RH(J) = ½ RH(J)
is RHM < RHJ
YES
RH_J = RHM
CONTINUE
is KRL = 0
NO
YES
MO = 0
KAL = 1
JJ = NRL
KCY(JJ) = 777
WRITE "LAST CYCLE
WRITE "CYCLE NO.'IWRL'"
RT = RH_KRH·RX
WRITE RT & U(KRH)
CALL WCAL
KRL = KRL-1

MNTRI

PEQ

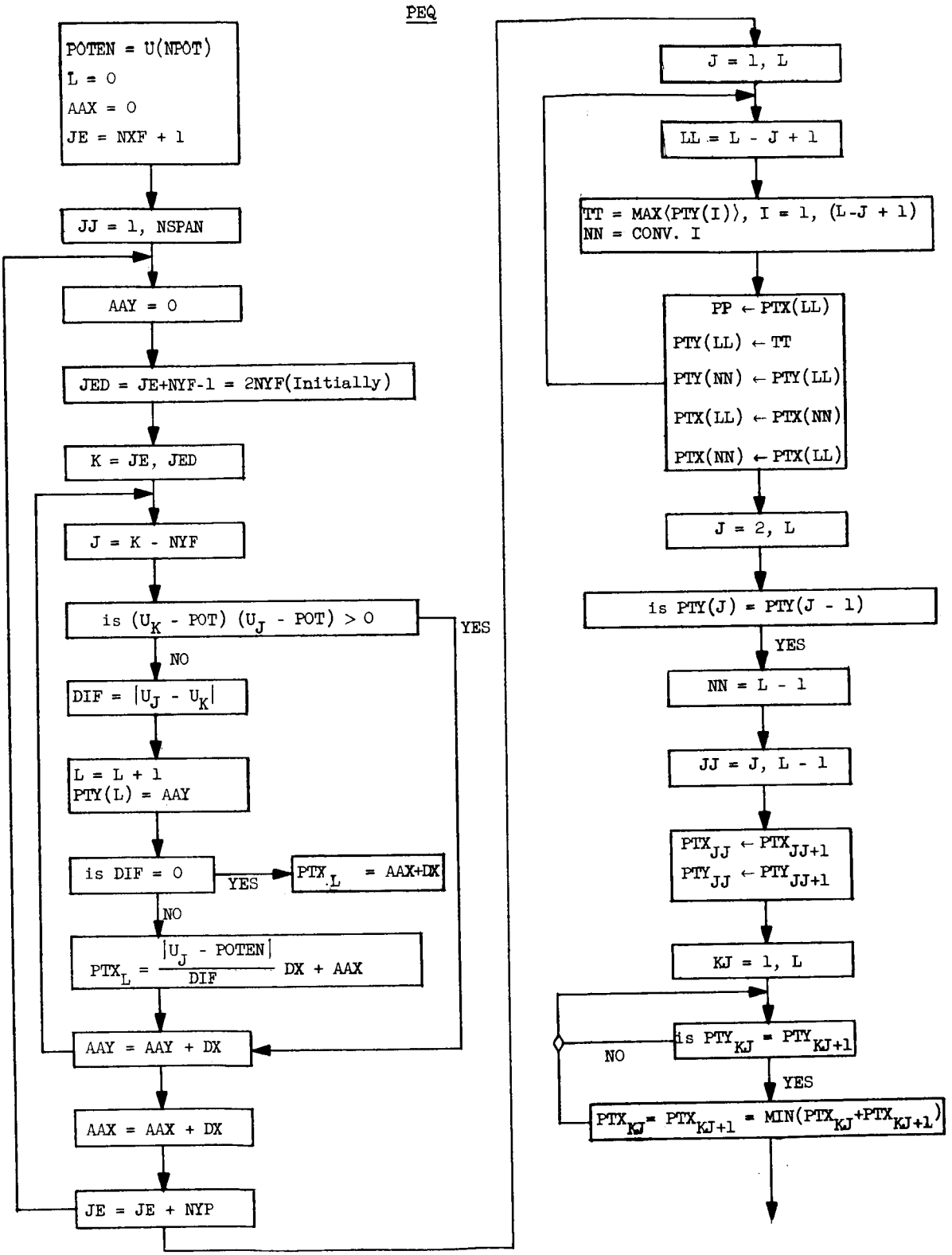
POTEN = U(NPOT)
L = 0
AAX = 0
JE = NXF + 1
JJ = 1, NSPAN
AAY = 0
JED = JE+NYF-1 = 2NYF(Initially)
K = JE, JED
J = K - NYF
is (U_K - POT) (U_J - POT) > 0
YES
NO
DIF = |U_J - U_K|
L = L + 1
PTY(L) = AAY
is DIF = 0
YES
PTX_L = AAX+DX
NO
PTX_L = |U_J - POTEN| / DIF DX + AAX
AAY = AAY + DX
AAX = AAX + DX
JE = JE + NYP
J = 1, L
LL = L - J + 1
TT = MAX(PTY(I)), I = 1, (L-J + 1)
NN = CONV. I
PP ← PTX(LL)
PTY(LL) ← TT
PTY(NN) ← PTY(LL)
PTX(LL) ← PTX(NN)
PTX(NN) ← PTX(LL)
J = 2, L
is PTY(J) = PTY(J - 1)
YES
NN = L - 1
JJ = J, L - 1
PTX_JJ ← PTX_JJ+1
PTY_JJ ← PTY_JJ+1
KJ = 1, L
is PTY_KJ = PTY_KJ+1
NO
YES
PTX_KJ = PTX_KJ+1 = MIN(PTX_KJ+PTX_KJ+1)

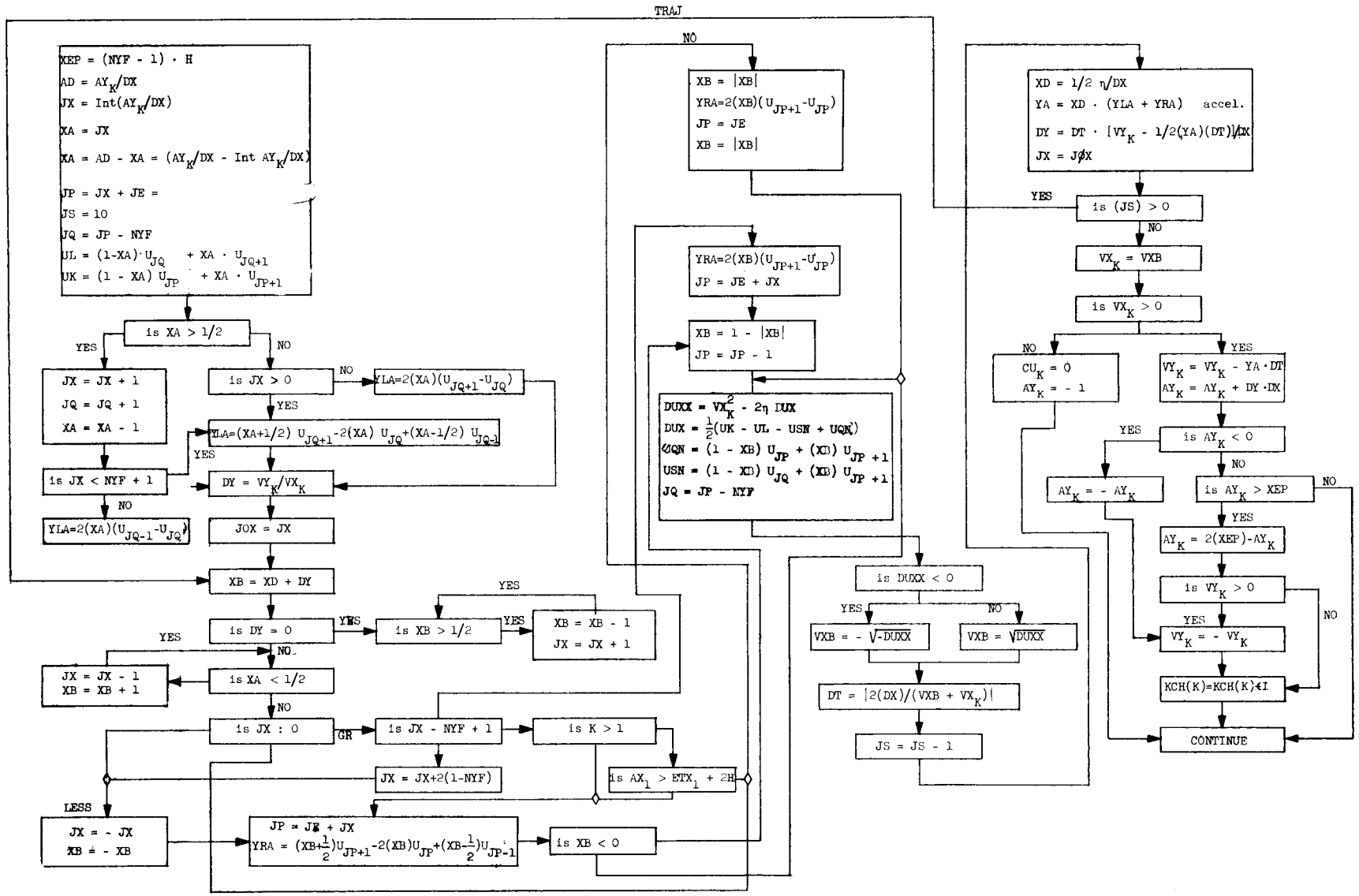
TRAJ
XEP = (NYF - 1) · H
AD = AY_K/DX
JX = Int(AY_K/DX)
XA = JX
XA = AD - XA = (AY_K/DX - Int AY_K/DX)
JP = JX + JE =
JS = 10
JQ = JP - NYF
UL = (1-XA)·U_JQ + XA · U_JQ+1
UK = (1 - XA) U_JP + XA · U_JP+1
is XA > 1/2
YES
NO
JX = JX + 1
JQ = JQ + 1
XA = XA - 1
is JX > 0
NO
YLA=2(XA)(U_JQ+1-U_JQ)
YES
YLA=(XA+1/2) U_JQ+1-2(XA) U_JQ+(XA-1/2) U_JQ-1
YES
is JX < NYF + 1
NO
YLA=2(XA)(U_JQ-1-U_JQ)
DY = VY_K/VX_K
JOX = JX
XB = XD + DY
is DY = 0
YES
NO
is XB > 1/2
YES
YES
XB = XB - 1
JX = JX + 1
YES
JX = JX - 1
XB = XB + 1
is XA < 1/2
NO
is JX : 0
GR
is JX - NYF + 1
is K > 1
JX = JX+2(1-NYF)
is AX_1 > ETX_1 + 2H
LESS
JX = - JX
XB = - XB
JP = JE + JX
YRA = (XB+1/2)U_JP+1-2(XB)U_JP+(XB-1/2)U_JP-1
is XB < 0
NO
XB = |XB|
YRA=2(XB)(U_JP+1-U_JP)
JP = JE
XB = |XB|
YRA=2(XB)(U_JP+1-U_JP)
JP = JE + JX
XB = 1 - |XB|
JP = JP - 1
DUXX = VX_K^2 - 2η DUX
DUX = 1/2(UK - UL - USN + UQN)
UQN = (1 - XB) U_JP + (XB) U_JP +1
USN = (1 - XB) U_JQ + (XB) U_JP +1
JQ = JP - NYF
is DUXX < 0
YES
NO
VXB = - √-DUXX
VXB = √DUXX
DT = |2(DX)/(VXB + VX_K)|
JS = JS - 1
XD = 1/2 η/DX
YA = XD · (YLA + YRA) accel.
DY = DT · [VY_K - 1/2(YA)(DT)]/DX
JX = JØX
YES
is (JS) > 0
NO
VX_K = VXB
is VX_K > 0
NO
YES
CU_K = 0
AY_K = - 1
VY_K = VY_K - YA · DT
AY_K = AY_K + DY · DX
YES
is AY_K < 0
NO
AY_K = - AY_K
is AY_K > XEP
NO
YES
AY_K = 2(XEP)-AY_K
is VY_K > 0
NO
YES
VY_K = - VY_K
KCH(K)=KCH(K)+1
CONTINUE

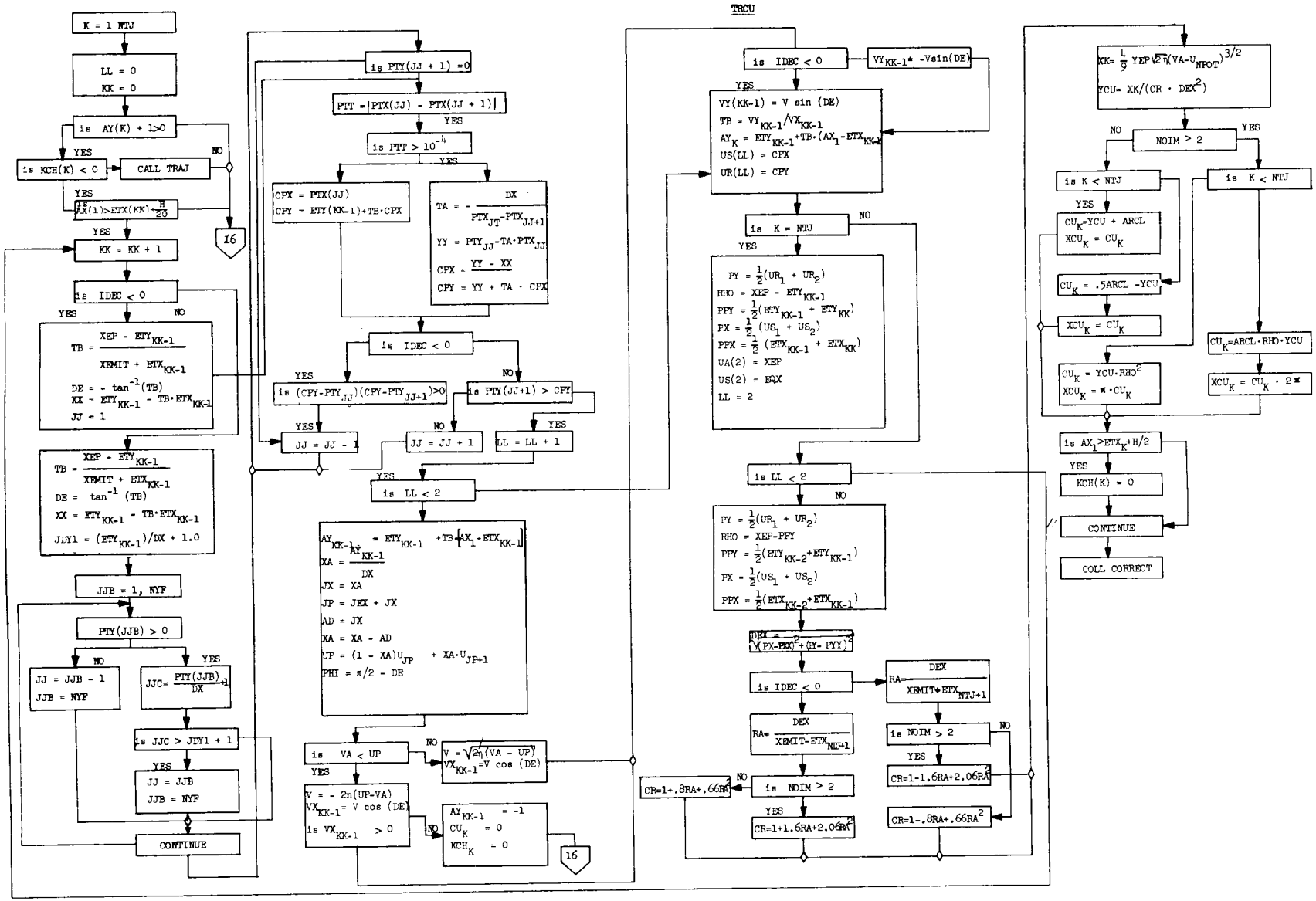
TRCU
K = 1 NTJ
LL = 0
KK = 0
is AY(K) + 1>0
YES
NO
is KCH(K) < 0
CALL TRAJ
YES
AX(1)>ETX(KK)+H/20
16
YES
KK = KK + 1
is IDEC < 0
YES
NO
TB = (XEP - ETY KK-1) / (XEMIT + ETX KK-1)
DE = - tan-1 (TB)
XX = ETY KK-1 - TB·ETX KK-1
JJ = 1
TB = (XEP - ETY KK-1) / (XEMIT + ETX KK-1)
DE = tan-1 (TB)
XX = ETY KK-1 - TB·ETX KK-1
JJY1 = (ETY KK-1)/DX + 1.0
JJB = 1, NYF
PTY(JJB) > 0
NO
YES
JJ = JJB - 1
JJB = NYF
JJC= PTY(JJB)/DX +1
is JJC > JJY1 + 1
YES
JJ = JJB
JJB = NYF
CONTINUE
is PTY(JJ + 1) =0
PTT =|PTX(JJ) - PTX(JJ + 1)|
YES
is PTT > 10-4
YES
CPX = PTX(JJ)
CPY = ETY(KK-1)+TB·CPX
DX
TA = - / PTX JT-PTX JJ+1
YY = PTY JJ-TA·PTX JJ
CPX = YY - XX
CPY = YY + TA · CPX
is IDEC < 0
YES
NO
is (CPY-PTY JJ)(CPY-PTY JJ+1)>0
is PTY(JJ+1) > CPY
YES
NO
YES
JJ = JJ - 1
JJ = JJ + 1
LL = LL + 1
YES
is LL < 2
AY KK-1 = ETY KK-1 +TB·(AX 1-ETX KK-1)
XA = AY KK-1 / DX
JX = XA
JP = JEX + JX
AD = JX
XA = XA - AD
UP = (1 - XA)U JP + XA·U JP+1
PHI = π/2 - DE
is VA < UP
NO
YES
V = √2n(VA - UP)
VX KK-1=V cos (DE)
V = - 2n(UP-VA)
VX KK-1 = V cos (DE)
is VX KK-1 > 0
NO
AY KK-1 = -1
CU K = 0
KCH K = 0
16
is IDEC < 0
VY KK-1* -Vsin(DE)
YES
VY(KK-1) = V sin (DE)
TB = VY KK-1/VX KK-1
AY K = ETY KK-1+TB·(AX 1-ETX KK-1)
US(LL) = CPX
UR(LL) = CPY
is K = NTJ
NO
YES
PY = ½(UR 1 + UR 2)
RHO = XEP - ETY KK-1
PPY = ½(ETY KK-1 + ETY KK)
PX = ½ (US 1 + US 2)
PPX = ½ (ETX KK-1 + ETX KK)
UA(2) = XEP
US(2) = EQX
LL = 2
is LL < 2
NO
PY = ½(UR 1 + UR 2)
RHO = XEP-PPY
PPY = ½(ETY KK-2+ETY KK-1)
PX = ½(US 1 + US 2)
PPX = ½(ETX KK-2+ETX KK-1)
DEX = √(PX-EQX)2+(PY- PYY)2
is IDEC < 0
RA= DEX / XEMIT+ETX NTJ+1
RA= DEX / XEMIT-ETX NTJ+1
is NOIM > 2
NO
YES
CR=1+.8RA+.66RA2
CR=1+1.6RA+2.06RA2
is NOIM > 2
NO
YES
CR=1-1.6RA+2.06RA2
CR=1-.8RA+.66RA2
XK= 4/9 YEP√2π(VA-U NPOT)3/2
YCU= XK/(CR · DEX2)
NOIM > 2
NO
YES
is K < NTJ
YES
CU K=YCU + ARCL
XCU K = CU K
CU K = .5ARCL -YCU
XCU K = CU K
CU K = YCU·RHO2
XCU K = π·CU K
is K < NTJ
CU K=ARCL·RHO·YCU
XCU K = CU K · 2π
is AX 1>ETX K+H/2
YES
KCH(K) = 0
CONTINUE
COLL CORRECT

TRØUT

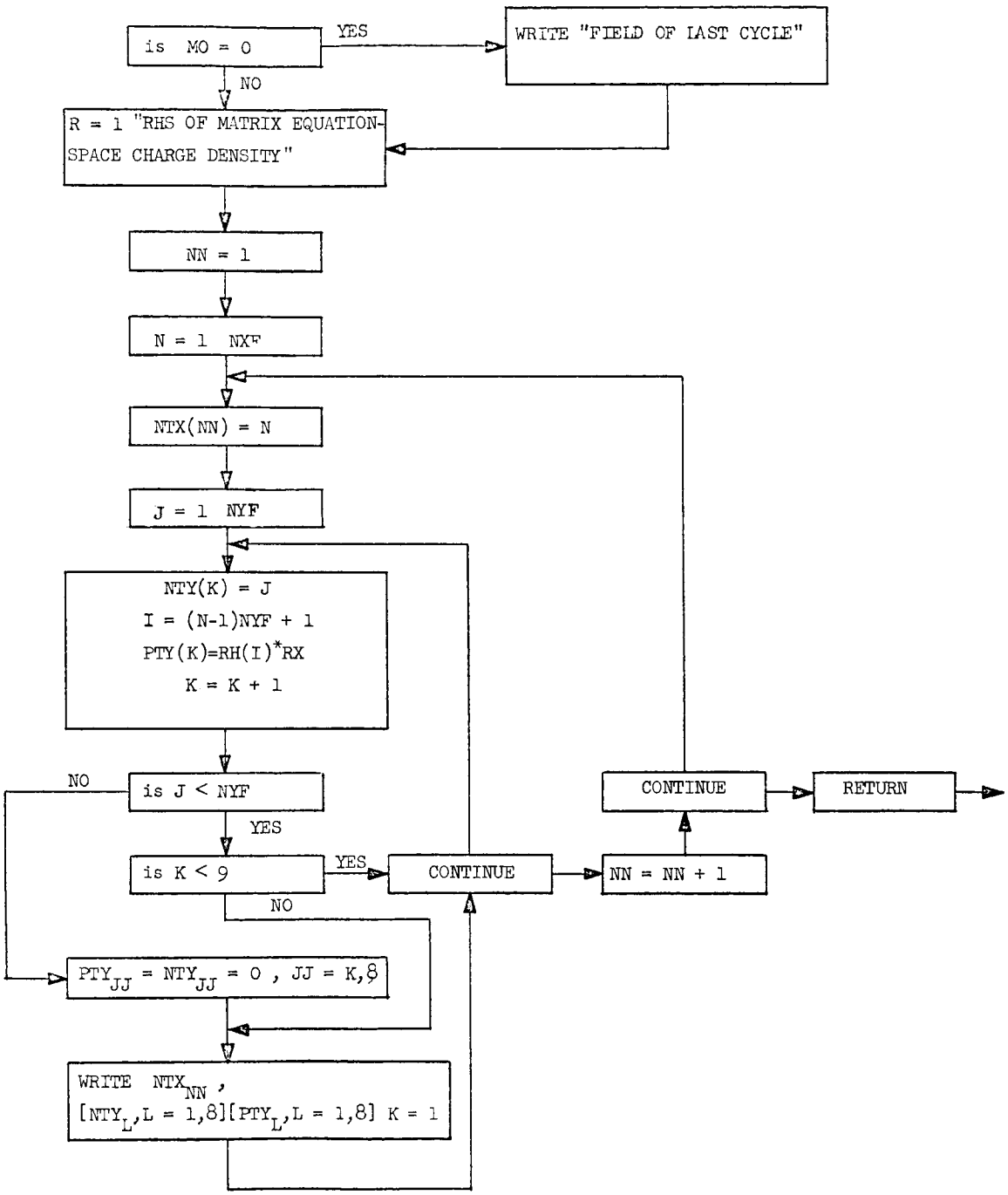
is MO = 0
YES
WRITE "FIELD OF LAST CYCLE"
NO
R = 1 "RHS OF MATRIX EQUATION-
SPACE CHARGE DENSITY"
NN = 1
N = 1 NXF
NTX(NN) = N
J = 1 NYF
NTY(K) = J
I = (N-1)NYF + 1
PTY(K)=RH(I)*RX
K = K + 1
NO
is J < NYF
YES
is K < 9
YES
CONTINUE
NN = NN + 1
NO
CONTINUE
RETURN
PTY_JJ = NTY_JJ = 0 , JJ = K,8
WRITE NTX_NN ,
[NTY_L,L = 1,8][PTY_L,L = 1,8] K = 1

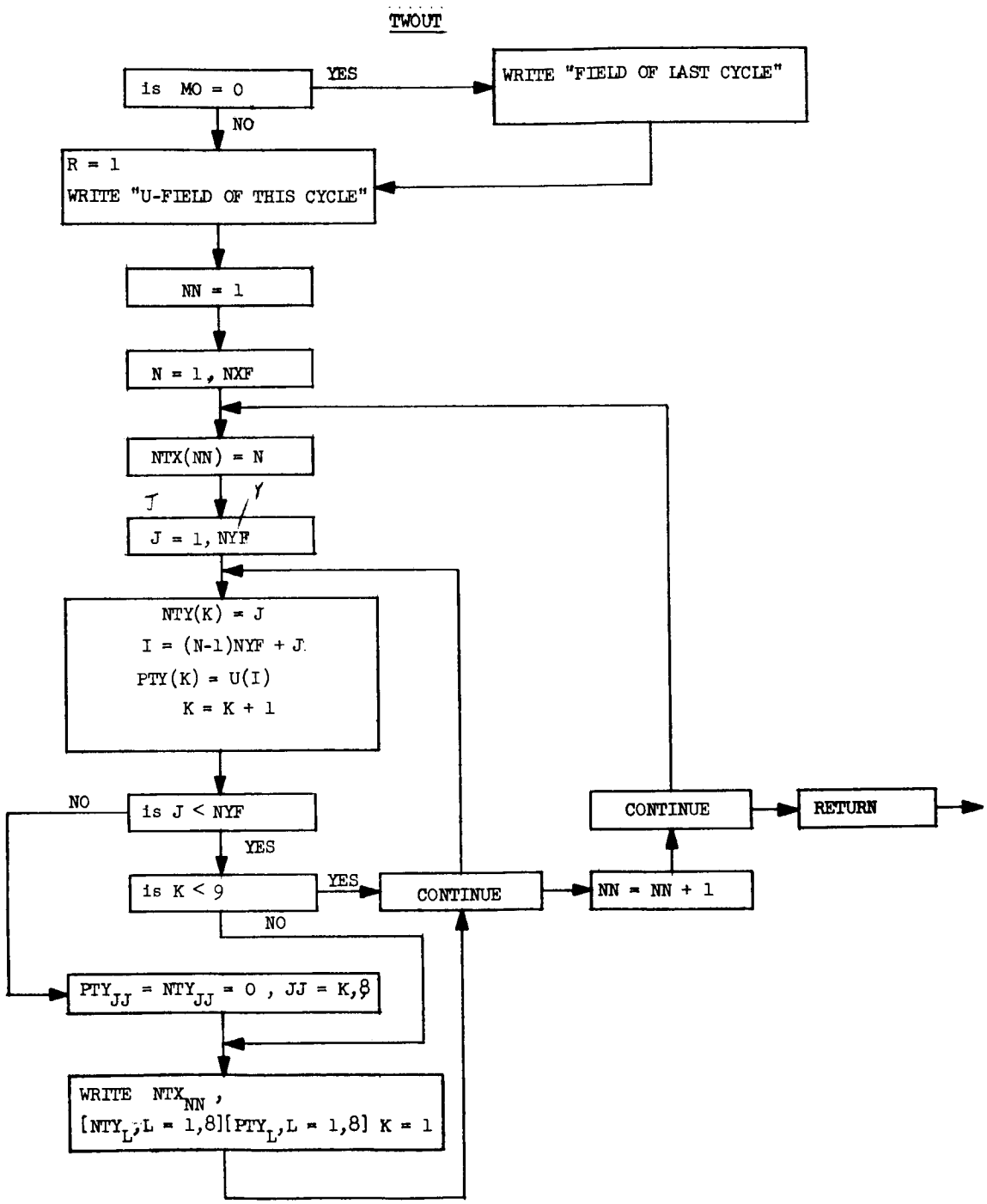
TWOUT
is MO = 0
YES
WRITE "FIELD OF LAST CYCLE"
NO
R = 1
WRITE "U-FIELD OF THIS CYCLE"
NN = 1
N = 1, NXF
NTX(NN) = N
J = 1, NYF
NTY(K) = J
I = (N-1)NYF + J
PTY(K) = U(I)
K = K + 1
NO
is J < NYF
YES
is K < 9
YES
CONTINUE
NN = NN + 1
CONTINUE
RETURN
NO
PTY_JJ = NTY_JJ = 0 , JJ = K,8
WRITE NTX_NN ,
[NTY_L,L = 1,8][PTY_L,L = 1,8] K = 1

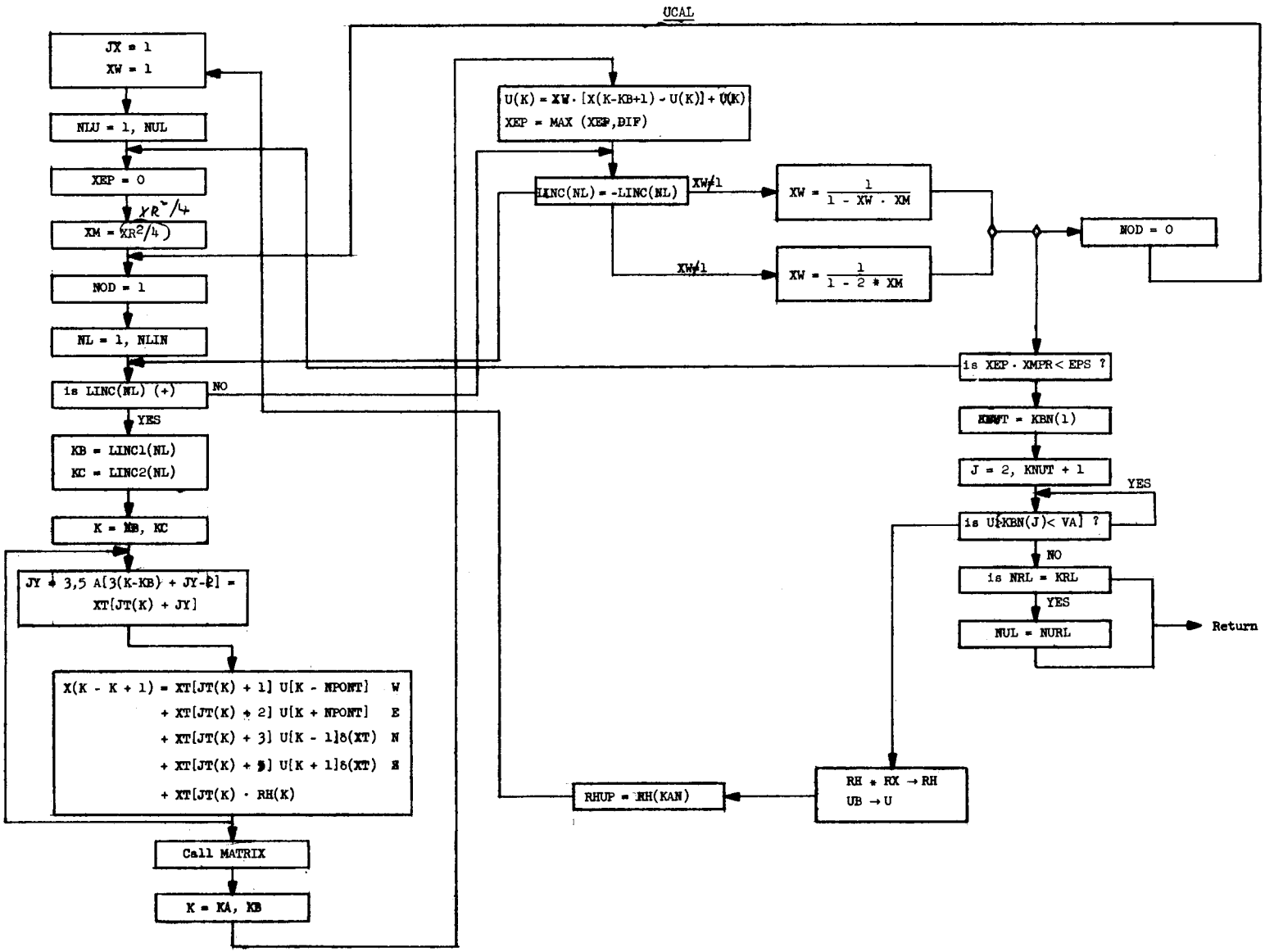
UCAL
JX = 1
XW = 1
NLU = 1, NUL
XEP = 0
XR²/4
XM = XR²/4
NOD = 1
NL = 1, NLIN
is LINC(NL) (+)
NO
YES
KB = LINC1(NL)
KC = LINC2(NL)
K = KB, KC
JY = 3,5 A[3(K-KB) + JY-2] = XT[JT(K) + JY]
X(K - K + 1) = XT[JT(K) + 1] U[K - NPONT] W
+ XT[JT(K) + 2] U[K + NPONT] E
+ XT[JT(K) + 3] U[K - 1]δ(XT) N
+ XT[JT(K) + 4] U[K + 1]δ(XT) S
+ XT[JT(K) · RH(K)
Call MATRIX
K = KA, KB
U(K) = XW · [X(K-KB+1) - U(K)] + U(K)
XEP = MAX (XEP,DIF)
LINC(NL) = -LINC(NL)
XW≠1
XW = 1 / (1 - XW · XM)
XW≠1
XW = 1 / (1 - 2 * XM)
NOD = 0
is XEP · XMPR < EPS ?
KNUT = KBN(1)
J = 2, KNUT + 1
YES
is U[KBN(J)< VA] ?
NO
is NRL = KRL
YES
NUL = NURL
Return
RH * RX → RH
UB → U
RHUP = RH(KAN)

REFERENCES

1. V. Hamza, "Design Analysis of Electrostatic Thrustors by a Computer Technique," Microwave Laboratory Report No. 1327, Stanford University (May 1965).
2. V. Hamza and G. S. Kino, "Error Analysis of a Numerical Solution to Space-charge-flow Problems," Microwave Laboratory Report No. 1335, Stanford University; submitted for publication to Quarterly of Applied Mathematics, June 1965.
3. V. Hamza, "Convergence and Accuracy Criteria of Iteration Methods for the Analysis of Axially Symmetric and Sheet Beam Electrode Shapes with an Emitting Surface," Microwave Laboratory Report No. 1332 Stanford University; Submitted for publication to IEEE Trans. on Electron Devices, May 1965.

ERRATUM to AFCRL-TDR-65-816

In DD Form 1473, last page of above report, initial date of period covered by the report, given as 23 Mar '63 should read 21 Mar '63.

Distribution: one copy of ERRATUM sheet to all recipients of report listed in Distribution List in report.