N66-15553
(ACCESSION NUMBER) (THRU)
42 1
(PAGES) (CODE)
CR 63807 03
(NASA CR OR TMX OR AD NUMBER) (CATEGORY)
FACILITY FORM 602

UNPUBLISHED

26

THERMOPHYSICAL AND TRANSPORT PROPERTIES OF [redacted] HIGH TEMPERATURE ENERGY STORAGE MATERIALS* [redacted]

(NASA Grant NsG-316)

(NASA CR-53807)

by

R. A. Sharma+ and H. Chang++

[1963] 26 p refs 2*

13693

A

For presentation at the 3d Ann. Symp., Tucson, Ariz.

ABSTRACT

The paper describes the prospective thermal energy storage materials and the techniques to be used for the measurements of their thermo physical properties, such as melting points, heats of fusion, and thermal transient transport properties. On the basis of the data available in the literature, several metals and compounds appear to be promising thermal energy storage materials.

The suitability of the eutectic mixtures of certain oxides and florides has been shown by making the estimations of their Heats of Fusion.

Author

GPO PRICE $
CFSTI PRICE(S) $
Hard copy (HC) 2.00
Microfiche (MF) .50
ff 653 July 65

[redacted] Unc.

*This paper is to be presented at The Third Annual Symposium, Tucson, Arizona, not to be published in the permanent literature in this form.

This work was supported by the National Aeronautics and Space Administration under contract NsG-316 to the Institute for Direct Energy Conversion of the Towne School of Civil and Mechanical Engineering of the University of Pennsylvania.

+Senior Research Associate, Institute for Direct Energy Conversion University of Pennsylvania, Philadelphia, Pennsylvania

++Research Fellow, Institute for Direct Energy Conversion, University of Pennsylvania, Philadelphia, Pennsylvania

1942382

Pennsylvania U., Philadelphia
@ Inst. for Direct Energy Conversion

INTRODUCTION

15538

In space exploration, some means of energy storage is necessary for solar powered generators. This can be achieved by storing the solar energy either in an electrical form by using batteries or in a thermal form by using latent heat of fusion of some suitable material. The electrical energy storage has the disadvantage of high system weight and does not prevent heat losses from the generator when the vehicle is in the shade. The thermal losses result in thermal cycling. The accompanying thermal stresses would tend to materially shorten the life of the generator.

Consequently, it is desirable to look for alternative means of storing the energy in thermal form. Initial effort has been directed towards:

(1) the synthesis of likely materials

(2) determination of their physico-chemical properties

(3) the determination of their transient heat transfer properties.

The essential requirements of a thermal energy storage material is that it should have a large heat of fusion per unit mass (minimum considered here is 200 cal/gm.), and a melting point not above 2100°K, which is set here as the upper limit of the temperature cycle. In addition, these materials should be compatible with suitable containers. Because of the weight limitation, only the light metals and their compounds can be taken into consideration and on the basis of the data available in the literature the following tables of likely thermal energy storage material have been prepared.

Author

[redacted]

TABLE I - THERMOPHYSICAL PROPERTIES OF METALS

METALS OR COMPOUNDS	M. P. °K	Heat of Fusion at Melting Point cals/mol.	cals/gm.
B*	2440[1]	5300	490
Be	1556 ± 2[2,3]	2800[3] ± 500	310
Si	1685 ± 2[4]	12110[4] ± 100	431
$Co\text{-}Si_3$	1579[5]	34000 ± 2500[5]	238
$Mg_2\text{-}Si$	1375°[2]	20500 ± 2500[2]	270

*Heat of fusion has been calculated on the assumption of entropy of fusion is 2.1 to 2.3 e.u.

TABLE II - THERMOPHYSICAL PROPERTIES OF COMPOUNDS

COMPOUNDS	M. P. °K	Heat of Fusion at Melting Point cals/mol.	cals/gm.
Li_2O	1700[6]	14.0[6]	470
BeO	2820[6]	17.00[6]	680
		15.1[7] ± 0.4	605
CaO	2860[6,9]	19.00[6,9]	340
MgO	3075[2,6,8,]	18.50[2,6,8,]	460
Al_2O_3	2318[2]	26.0[2]	260
LiF	1121[6,9]	6.474[6,9]	250
BeF_2	1088[6]	12.9[6]	274
MgF_2	1536[2,3]	13.90[2,3]	224

Table I indicates the suitability of the materials B, Be, Si, Co, $CoSi_3$, and Mg_2 Si for the thermal energy storage insofar as the heat of fusion to weight ratio is concerned. The use of Boron, because of its high melting point of 2440°K, is ruled out while Be, Si, Co-Si_3, and Mg_2 Si may present difficult container problems.

Table II points out the suitability of the compounds Li_2O, BeO, MgO, CaO, Al_2O_3, LiF, BeF_2, and MgF_2 with heats of fusion per gm of 470, 605, 460, 340, 260, 250, 274, 224, respectively. Pure BeO, MgO, CaO and Al_2O_3 can not be used, as their melting points are above the temperature considered. The compounds Li_2O, LiF, and MgF_2, appear to be some of the likely thermal energy storage materials, although the decomposition pressure of Li_2O is high at the melting point (1700°K). They also do not offer a wide range of temperature selection. This may be achieved by utilizing the eutectics of the refractory oxides or fluorides.

Unfortunately, even approximate heat of fusion data are not available for most of these mixtures.

Heats of fusion for 60 BeO - 40 MgO 500 cal/gm and for 60 BeO - 40 CaO 221 cal/gm reported by Batutis[11] and 200 cal/gm for the latter system by Glasscock, Jr.[12] may be open to question for the reason that CaO and MgO are chemically similar and the heats of fusion of 60 BeO - 40 MgO and 60 BeO - 40 CaO, inspite of their different melting points, should not differ more than 100 cals. The present difference is more than double of the expected one.

On the assumption that the entropy of fusion of the oxide or fluoride under consideration does not change between the

melting point and the eutectic temperature, and that there is no interaction between the components, the heats of fusion of the eutectic compositions have been calculated for the systems whose phase diagrams and necessary thermal data are available. These are presented in the Table III.

TABLE III - BINARY SYSTEMS OF OXIDES OR FLUORIDES

Ref.	System	Eutectic Composition X	Eutectic Temp. T_e 0° K	Estimated Heat of Fusion cals/gm. mole	cals/gm.
10,13	CaO-BeO	0.67 BeO	1738	10000	283
10,6	MgO-BeO	0.67 BeO	2143	12000	400
10,6	CaO-MgO	0.5 MgO	2573	16300	340
3,10	LiF-NaF	0.39 NaF	925	5510	171
3,6	LiF-MgF_2	0.33 MgF_2	1015	6940	185
6,10	LiF-BeF_2	0.50 BeF_2	633	5580	153
3,6,10	MgF_2-BeF_2	0.90 Bef_2	948	10900	224

This table should also have contained some eutectic mixtures containing Li_2O, but this has not been possible on account of the unavailability of phase diagrams. As may be seen from the table, the eutectic of CaO-BeO, MgO-BeO, CaO-MgO and BeF_2-MgF_2 apperar to be suitable. Though the paucity of data does not allow any calculations for prediction, however, some ternary systems such as CaO-MgO-Li_2O, BeO-MgO-Li_2O, BeO-CaO-Li_2O, and CaO-MgO-BeO may cover a wider range, between 1500°-2100° C, while the eutectics of LiF, BeF_2, and MgF_2 may be appropriate for temperatures of about 1000^oK. The lowering of the fusion temperature may also overcome

the dissociation problem of Li_2O. It might also be possible to use the eutectics, such as $BeF_2 + BeO$, $MgO + MgF_2$ etc., as the strong deviations from ideal behavior typical of such systems may be advantageous. The most disappointing thing about the systems considered above is that neither established phase diagrams nor accurate data on heats of fusion are available. Faced with this situation, the experimental effort has been directed initially at establishing the phase diagrams of the prospective systems by a differential thermal analysis technique. After establishing the phase diagrams, and selecting the suitable mixtures, the next step will be to measure the heat capacities and heats of fusion of these materials by an isothermal dropping type calorimeter. It is also intended to measure the volume change on fusion of these mixtures.

Further studies will be conducted to determine the thermal transient transport properties of some selected materials.

<u>The Differential Thermal Analysis Apparatus</u> (Schematic Diagrams in Fig. I & II)

This apparatus consists of a platinum - 40% rhodium wire wound furnace which gives temperatures up to 1750°C, a programmed controller with silicon controlled rectifier to raise the temperature of the furnace, and adjustable zero and adjustable range recorder for recording the temperature, and a recorder with a ± 5 mv range for recording the differential E.M.F. The differential E.M.F. is amplified by a D. C. amplifier before being fed to the recorder.

The desired uniform heating rate of the furnace is obtained by means of a motor driven cam which drives the control

point of the proportional controller and so varies D. C. voltage. This D. C. voltage is applied to a silicon controlled rectifier which regulates the power to the furnace windings.

By this arrangement, it is possible to raise the temperature of the furnace at a uniform rate from 3 to 20 centigrade degrees per minute. Lower heating and cooling rates have been achieved by lowering the rotation speed of the cam by including an adjustable interrupter in the power supply to the motor. The adjustable zero and adjustable range recorder can record the temperature accurately within $\pm 1^{\circ}C$ and is capable of internal standarization.

An alumina reaction tube 1.5" in diameter and 42" long is supported in the furnace winding tube. To one end of the reaction tube is attached a standard glass cone, the socket of which contains a positioned thermocouple sheath. A Pt-40% Rh wire spiral, to hold the sample, is suspended from the thermocouple sheath. By having this type of arrangement it is possible to keep the position of the sample constant inside the furnace. Use of a wire spiral to hold the sample also helps to present loss of sample by creeping, a phenomenon found with these molten materials. The thermocouple sheath has six holes, out of which two are used for a thermocouple for the programmed controller and three for the differential thermocouple. Stray voltages have been a persistent problem but they have now been eliminated by fitting grounded conductive sheaths over all external leads and by winding a grounded platinum wire down the thermocouple sheath to the sample holding spiral.

Preliminary experiments have been conducted to test the experimental arrangement. The melting point of $CaSiO_3$ was found to be $1544 \pm 2^{\circ}C$, which is in excellent agreement with

$1540^{10} \pm 4$ reported in the literature. A typical differential heating curve is shown in Fig. 7. One interesting thing observed in these experiments was that the heat effect in the differential curve was observed only on heating but not on cooling. This may have been due to glass formation.

The melting point of pure CaF_2 was determined and found to be $1368^{\circ} \pm 2C$. The values quoted in the literature are $1386^{\circ}C$[14], $1361^{\circ}C$[15], $1418^{\circ}C$[3], $1414^{\circ}C$[16], $1390^{\circ}C$[17], and $1385^{\circ}C$[18]. The melting point of MgF_2 was also measured and was found to be $1238^{\circ} \pm 2$ C, while $1263^{\circ}C$[3], $1396^{\circ}C$[19], $1270^{\circ}C$[20] and $1240^{\circ}C$[21] have been reported in literature. In these experiments it has been also observed that the melting points of CaF_2 and MgF_2 are independent of the rate of heating from 1 to 3 degrees per minute. The m. p. obtained with the 1 to 3 degrees per minute heating or cooling rate is the same within 1 to 3 degrees centigrade.

The apparatus is now intended to be used for the establishment of phase diagrams.

Further studies are planned for the measurements of heats of fusion of the selected materials. This is generally done by a calorimetric method, where usually the measurements are made of the difference in heat contents between room temperature and several temperatures in a range extending above and below the melting point. The values obtained for gm. atomic heat contents at these temperatures are plotted. Two smooth lines, separated by a discontinuity, are drawn through the experimental points. The height of this discontinuity at the m.p. is equivalent to the heat of fusion.

The commonly used apparatus consists of a furnace to heat the samples to some desired temperature and a calorimeter (various types are[2] described in the literature) to measure the amount of heat evolved in cooling from this temperature to some lower temperature.

For the present study, the apparatus consists of a tantalum heating element furnace and an isothermal dropping type calorimeter. The main points considered in designing the apparatus are that the temperature of the sample should be uniform and accurately known. For this, special attention has been given to the design and fabrication of the furnace and the temperature is to be measured by an optical pyrometer checked frequently against a standard tungsten strip lamp and calibrated by a W/W - Re or Pt/Pt-Rh thermocouple.

The jacket of the furnace is water cooled to prevent warming of the air which may transfer heat to the calorimeter. A water cooled gate is provided between the furnace and calorimeter to prevent transferred energy by radiation between the two. The whole furnace and calorimeter space is gas tight and can be evacuated to the pressures of 10^{-3} to 10^{-4} mm Hg. or maintained with a rigorously controlled atmosphere.

The operation of the water cooled gate and sample dropping mechanism is performed electrically, with a view to reduce the time taken for dropping a sample, thus reducing the transfer of heat from the furnace to the calorimeter. The description of the set up Fig. 3 is as follows.

<u>FURNACE</u> This has a tantalum heating element in the form of a cylinder of 2" diameter, made of a sheet 20" long and 0.005" thick. Three concentric molybdenum radiation shields surround

the heating element to prevent heat losses. The shields and heating element are held in water cooled copper rings which are connected to water cooled electrical leads. The whole unit is encased in a water cooled brass jacket. The furnace is to be operated with a voltage of 0-15v A. C. and a current of up to 500 amps. The temperature of the furnace is regulated by means of a variac and a constant voltage transformer. The furnace is intended to give temperatures up to 2200° C. There is an arrangement to move the furnace up vertically through a distance of 14" on steel columns, for access to the calorimeter.

An isothermal calorimeter has been chosen for the measurements because of its simplicity in construction, instrumentation and operation. It has been designed on the principle of the ice calorimeter invented by Black[22], developed by Bunsen[23] and recently improved to a greater degree of precision by Ginnings and Corruccini[24]. In this method, a sample at some desired temperature is dropped into a chamber surrounded by a pure substance in solid-liquid equilibrium (e.g. ice and water). The heat evolved is absorbed by the chamber, melts some of the solid, and is subsequently determined by measuring the accompaning proportioned change in volume. In the present calorimeter, diphenyl ether, instead of water, has been chosen. The thermodynamic properties of diphenyl ether are accurately known[25], and the melting point is 300.03° K. It is easy to maintain a thermostatically controlled bath at this temperature and only a small correction is needed in the data to standard room temperature (298.15°K).

CALORIMETER The main body of the calorimeter consists of a copper tube well of 2" diameter extending up to the furnace. The whole

space is gas tight and can be evacuated simultaneously with the furnace. Radiation from the furnace is prevented by introducing the electrically operated water cooled gate. The conduction losses from the calorimeter are reduced by incorporating a tubular inconel section about 8" from the bottom of the well. The sample will fall into a 6" copper tube inside the well. This tube fits closely in the calorimeter well and contains baffles and copper turnings; baffles will prevent upward radiation and convection heat losses from the calorimeter, while the turnings will prevent spot heating in the well. This separate tube facilitates the removal of the sample. There are also baffles outside the well which help to conduct heat quickly to the solid diphenyl ether.

The well is surrounded by a closed Dewar flask which will contain mercury and diphenyl ether. A thin tube is led from the bottom of the flask in order that the volume change of the diphenyl ether may be measured by the displacement of mercury.

The calorimeter is surrounded by a thermostatically controlled bath 24" long x 24" wide and 24" deep and kept at a temperature near the melting point of diphenyl ether ($300.03^{\circ}K$) by means of a thermistor temperature controller and two diagonally placed stirrers. Before starting the run, a mantle of solid diphenyl ether will be formed by cooling the well with dry ice. The sample will be brought to the required temperature in the furnace and then dropped into the well by a drop mechanism after opening the water cooled gate. The amount of heat released will melt the diphenyl ether and resulting volume expansion will displace the mercury. By noting the volume change indicated by the mercury displacement, the heat released will be found. The set-up is still in the development stage.

In addition to the above measurements, it is also necessary to know the volume change on fusion of the material for the design and fabrication of the container. Not even scanty data are available, except for LiF where a 12 1% increase in volume on fusion is reported [26]. The next set of experiments are designed for measurements of this kind.

Besides the earlier measurements, it is of paramount importance to know the transient thermal transport properties of the thermal energy storage materials in order to effect the optimum design of a heat receiver for the energy storage device. The problem to be considered here may be better understood by referring to Fig. 4[27]. As is shown in this figure, Solar energy is concentrated by the use of a parabolic mirror, and is focused on the opening of the heat receiver. An annular space within the heat receiver is filled with the desired material. Mounted on the outer surface of the heat receiver are the energy converters which produce electric power. The solar energy entering the receiver is distributed in three ways.

1. Part of this energy will be re-radiated through the opening of heat receiver.

2. Part of this energy will be transported through the storage material to the converters.

3. Part of this energy will be used in melting storage material.

At the end of the heating cycle, i.e. at sunset, the opening of the heat receiver would be closed to prevent further re-radiation, and the heat energy liberated by the solidifying storage material would be used to power the converters. Although the design of the heat receiver here appears simple, the transient heat transfer

problem involved is quite complicated, primarily because the material of interest becomes partially translucent at the temperatures under consideration and therefore the mode of heat transfer consists primarily of simultaneous conduction (phonon conduction) and radiation (photon conduction). The problem is further complicated by the fact that heat is transferred through the material where both liquid and solid phases are present. In addition to the problem of different phases, effects appear at the interfaces between the solid or liquid material and the container wall. It is quite clear from the above considerations that the mode of heat transfer in the system under consideration is neither a simple conduction nor a radiation but consists of both taking place through a material made of solid and liquid phases. Further, the data are required in the transient state. In the literature, even the data for the simple conductivity of these materials at the desired temperatures are not available, except that the thermal conductivities of BeO, CaO, MgO and Al_2O_3 in their solid states are reported at $1670^{o}K$ as 0.0362, 0.0174, 0.0144 and 0.0131 cal $sec.^{-1}$ cm^{-1} $^{o}C.^{-1}$ respectively.[11] Also, the thermal conductivity of "salt A" (11.5 mol -% NaF, 42.5 mol -%KF and 46.0 Mol.-%LiF) in the liquid phase for temperatures of $490^{o}C$ to $850^{o}C$ is given as 0.0057 to 0.0129 cal $sec.^{-1}$ cm^{-1} $^{o}C^{-1}$.[28]

In view of this situation, it has been decided to design the initial experiments to measure the thermal conductivity of the selected thermal energy storage material in the solid phase, under the conditions of steady state heat transfer. In the process to be adopted, heat is passed from an external heater through the cylindrical specimen to a heat sink along its axis. Conductivities can be determined from the radial temperature drop across the specimen and the heat flow into the heat sink by the relation

$$k = \frac{q \ln {}^{r_2}/_{r_1}}{2 \pi L (\Delta T)} \qquad (1)$$

where r_1 and r_2 are the respective distances of the inner and outer sight holes from the axis and L is the length of the specimen over which the heat flow is measured.

Apparatus, slightly similar to Rasor's[29] and placed in a chamber with vacuum or controlled atmosphere, is as follows:

The heater Fig. 5 is a hollow graphite cylinder 8" long, 2.5" inside diameter, and 1/8" thick. The cylinder has a series of parallel grooves engraved on its outer surface, to a depth of half the wall thickness. The grooves are parallel to the base of the cylinder. There are two sets of grooves, each alternating from the other by 90°. This arrangement prevents mechanical weaking of the heater. The heater is screwed into two carbon blocks of 5" diameter and 2.5" deep. The blocks have cylindrical holes equal to the diameter of the heater. The carbon blocks are connected through water cooled copper tubes to a step down transformer with a secondary rating of fifteen volts at 600 amps. The primary of the transformer is connected through a variac to the power source. The heater is expected to give the desired temperature.

The heat sink, which also serves as a heat meter, consists of a 3/8 inch diameter stainless steel or molybdenum tube with walls 0.010 inch thick, along the axis of which is a 6 mm o.d. glass tube of 1 mm wall thickness. The sink tube extends along the axis of the heater from its bottom to the top up to the sight tube. Water or helium flows through the annulus between the inner and outer tubes. The external surface of the

steel tube is blackened with carbon to increase radiant heat transfer and to eliminate adverse effects of non uniformity which may occur during operation of furnace. The inner glass tube is coated with coarse sand to obtain turbulence for better heat transfer.

Four sets of Platinel 1520/platinel 1786 (or other suitable materials depending on temperature) differential thermocouples are equally spaced around the inner tube in the annular space. The junctions of each are projected into the water stream and are separated by 1" in the region of the heat sink length opposite the center of the specimen.

The differential E.M.F. is therefore proportional to the temperature rise of the water as it passes through this region. Since negligible heat is expected to pass through the wall of the inner glass tube, the temperature rise of the water is proportional to the heat flow into that region of the heat sink. This heat meter is calibrated by passing an electric current through the outer tube and observing the thermocouple E.M.F. for a given electrical power dissipation in the corresponding length of the outer tube.

The cylindrical test specimen Fig.6 is made of five circular disks stacked up one on top of the other. All the disks are 1/2" thick except the one in the center which is 1" thick. The disks are in the form of annular rings having an inside diameter of 1/2" and an outside diameter of 2". Tapered holes to the center plane of the center disk are made along the inside and outside periphery of the specimen as shown in Fig. 6. These holes are provided for measuring the temperatures with an optical pyrometer.

As may be seen from the figure in this method, heat is radiated from a graphite heater to the outer surface of the specimen.

This heat is then conducted radially to the surface of the 1/2" diameter hole at the specimen axis, where it is radiated to a water cooled heat sink placed in the hole. The radial heat flow, q, through the central disk of 1" thickness is determined by measuring the flow rate and temperature rise of the cooling water in the corresponding section of the heat sink. The radial temperature drop ΔT is determined with an optical pyrometer by measuring the temperatures at two different radii through the sight holes penetrating to the central plane of the central disk.

From the quantity of heat passing through the sample and the radial temperature drop, the conductivity is determined by equation 1. The first set of experiments is designed for the conductivity measurements of the material in the solid state. Ultimately, the apparatus is to modified to measure the conductivities in the liquid state too. After gaining knowledge of the conductivities of liquid and solid material, attempts will be made to determine some relation by which conductivities can be predicted for a material in solid and liquid phase at equlibrium.

CONCLUSION

As a result of preliminary survey of literature, some metals, compounds and eutectic mixtures have been shown as likely suitable thermal energy storage materials. Necessary techniques and the experimental a apparatus needed to measure their thermo-physical and transport properties have been described. Further areas of research towards the development of those materials have been pointed out.

Acknowledgements

The authors are thankful to Dr. G. R. Belton, Assistant Professor Metallurgical Engineering, University of Pennsylvania, and Dr. M. Altman, Director, Institute for Direct Energy Conversion, Associate Professor Mechanical Engineering, University of Pennsylvania, for their valuable suggestions in preparation of this paper.

References:

1. A. W. Searcy and Mayers, J. Phys. Chem. 61 957 (1957)

2. O. Kubaschewski and E. L. Evans, Metallurgical Thermochemistry (1955)

3. K. K. Kelly, U. S. Bureau of Mines Bulletin 584 (1960)

4. M. Olette, Physical Chemistry of Steelmaking, John Wiley, 478 1952

5. Schneider, A and Stall, E. K., Z Electrochem. 1941, 47, 527

6. JANAF Thermochemical Data Interim Table, Dow Chemical Co. issued December 31, 1960 - Dec. 31st, 1960, Sept. 30, 1963

7. Schumacher, E. E., J. Am. Chem. Soc. 48, 396 (1926)

8. Kanelt, L. J. Washington Academy of Science, 3, 315 (1931)

9. O. Kubaschewski and Dency, W. H. J. Inst. Metals 1953, 82-87

10. Phase diagrams for ceramics, American Cer. Soc. 1956

11. E. F. Batutis, Final Report - Thermal Energy Storage, Research & Development Program, Dec. 6, 1960 to Dec. 1, 1961, G. E. Co., Philadelphia

12. Horner H. Glancock, Jr., J. App. Phys. 33, 3296-8 (1962)

13. Kandyka, V. V. P. B. Kanter Metal Doklady Akad Nank SSSR 131, 5, 556 (1960)

14. W. Eitel Zemant 27, 469-72 (1938)

15. Von P. Pascal Z Electrochem. 19 611 (1913)

16. W. J. McCreary J. Am. Chem. Soc. 77 2119 (1955)

17. P. P. Budnikov and S. G. Tresvyatski, Dokaldy Akad, Nank, S.S.S.R. 89 481, 1953

18. A. S. Berezhnoi, Dobovidi, Akad Nank UKR RSRP 250, 1951

19. Handbook of Chemistry and Physics, 1962

20. A. G. Berezhnoi, E. P. Dergunov, Comp. Rend. Akad. Sei U.R.S.S. 31 755 (1941)

21. Giovanni Venturello Atti Reale Accad. Scie. To rino 76 Part I 559 (1941)

22. "Calorimetry" Encyclopedia Brittanica 1957

23. R. Bunsen, Pogg. Ann. Physik, 141, 1, 1870

24. D. C. Ginnings and R. J. Corrucuni J. Res. Nat. Bur. Standards 38 583, 1947

25. G. T. Furukawa, D. C. Ginnings, R. E. McCoskey and R. A. Nelson, J. Res., Nat. Bur. Standards, 46, 195, 1951

26. G. J. London, A. R. Ubbdohde, Tr. Faraday Soc., Vol. 52 647-651, 1956

27. M. Altman, D. P. Ross, and H. Chang, "The Prediction of Transient Heat Transfer Performance of Thermal Energy Storage Devices", A.I.Ch.E. Preprint No. 56, Sixth National Heat Transfer Conference

28. J. R. Spann, C. T. Eqing, B. E. Walker and R. R. Miller, "Thermal Conductivity of Salt 'A' ", N. R. L. Report 5144 Naval Research Laboratory, Washington, D. C., April, 1958.

29. N. S. Rasor and J. D. McClelland "Thermal Property Measurements at very high Temperatures", Rev. of Sci. T 31(6) 595-604 (1960)

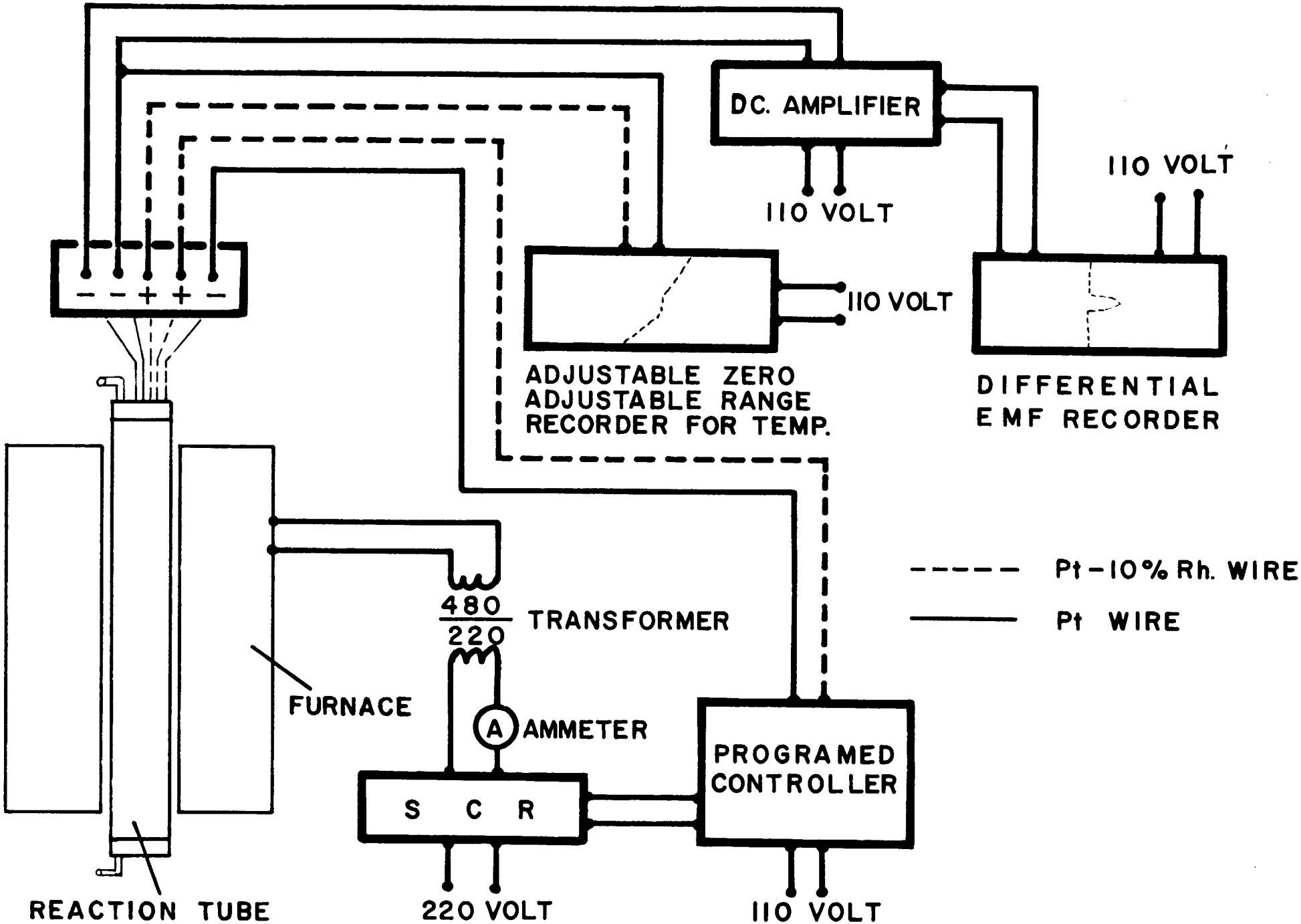

FIG. I SCHEMATIC DIAGRAM FOR D.T.A. APPARATUS

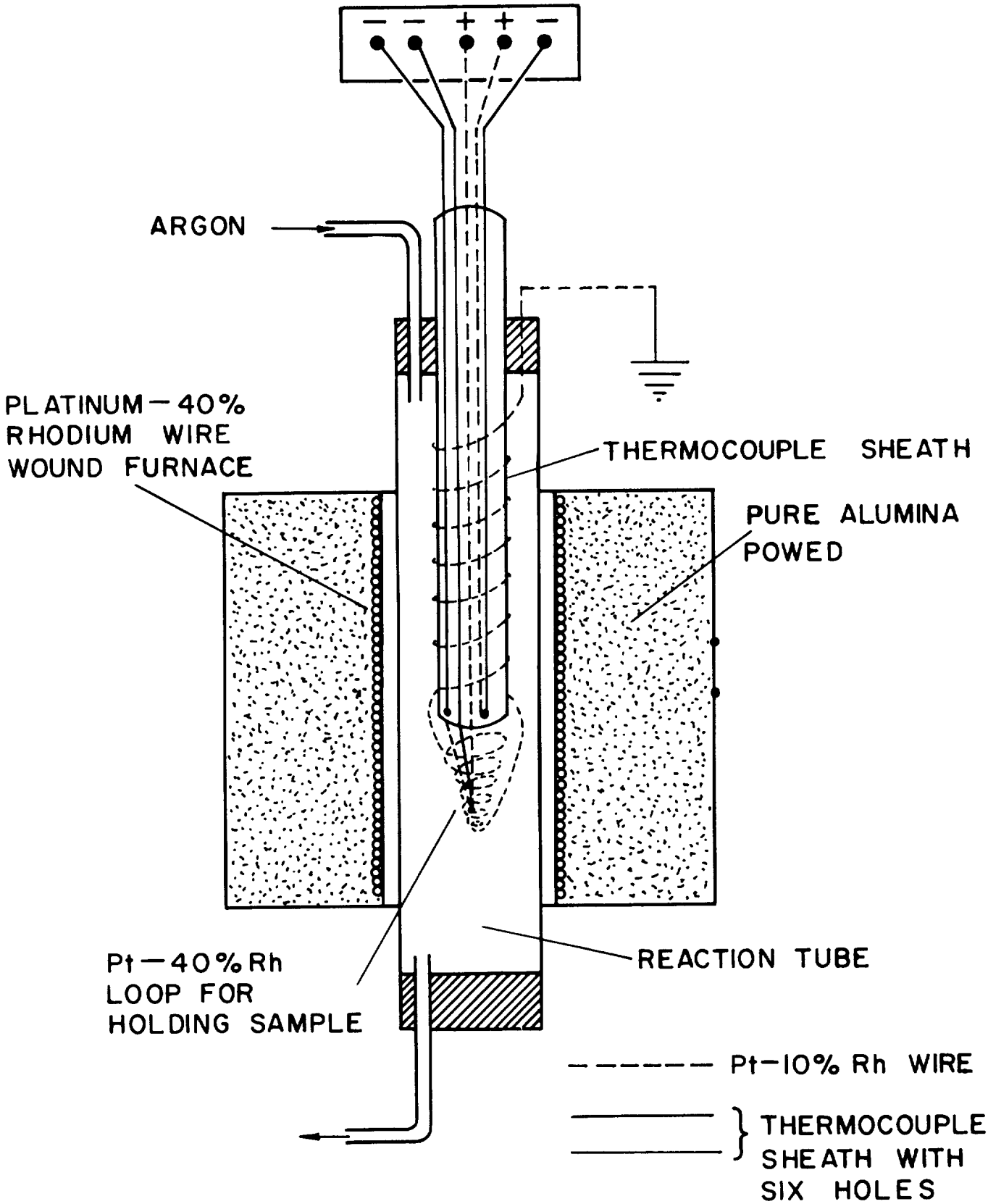

FIG. 2 DETAILS OF THE D.T.A FURNACE

ISOTHERMAL CALORIMETER

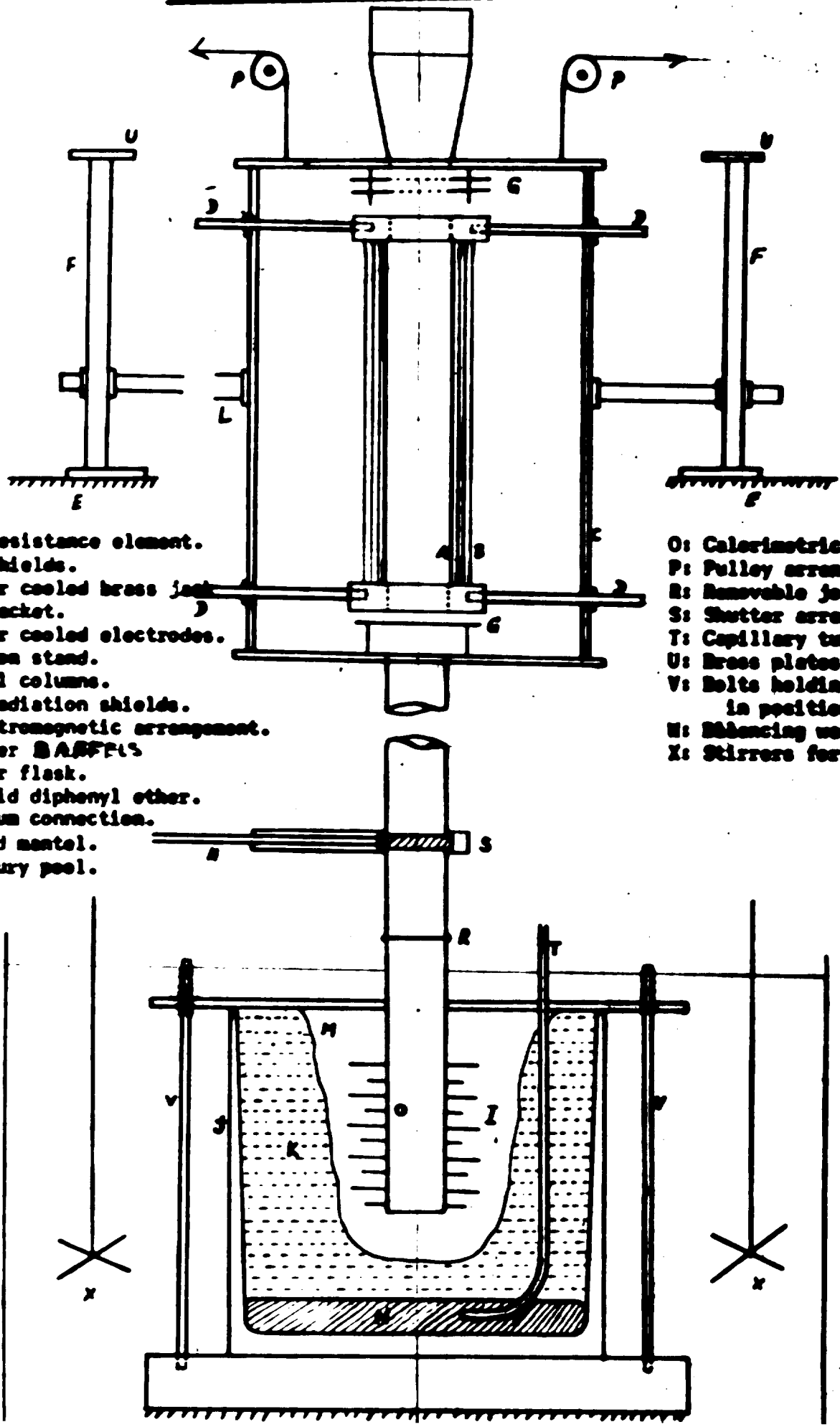

A: TA resistance element.
B: No shields.
C: Water cooled brass jacket.
D: Water cooled electrodes.
E: Dixion stand.
F: Steel columns.
G: No radiation shields.
H: Electromagnetic arrangement.
I: Copper BAFFLS
J: Dewar flask.
K: Liquid diphenyl ether.
L: Vacuum connection.
M: Solid mantel.
N: Mercury pool.

O: Calorimetric well.
P: Pulley arrangement.
R: Removable joint.
S: Shutter arrangement.
T: Capillary tube.
U: Brass plates.
V: Bolts holding the cover in position.
W: Balancing weights.
X: Stirrers for water bath.

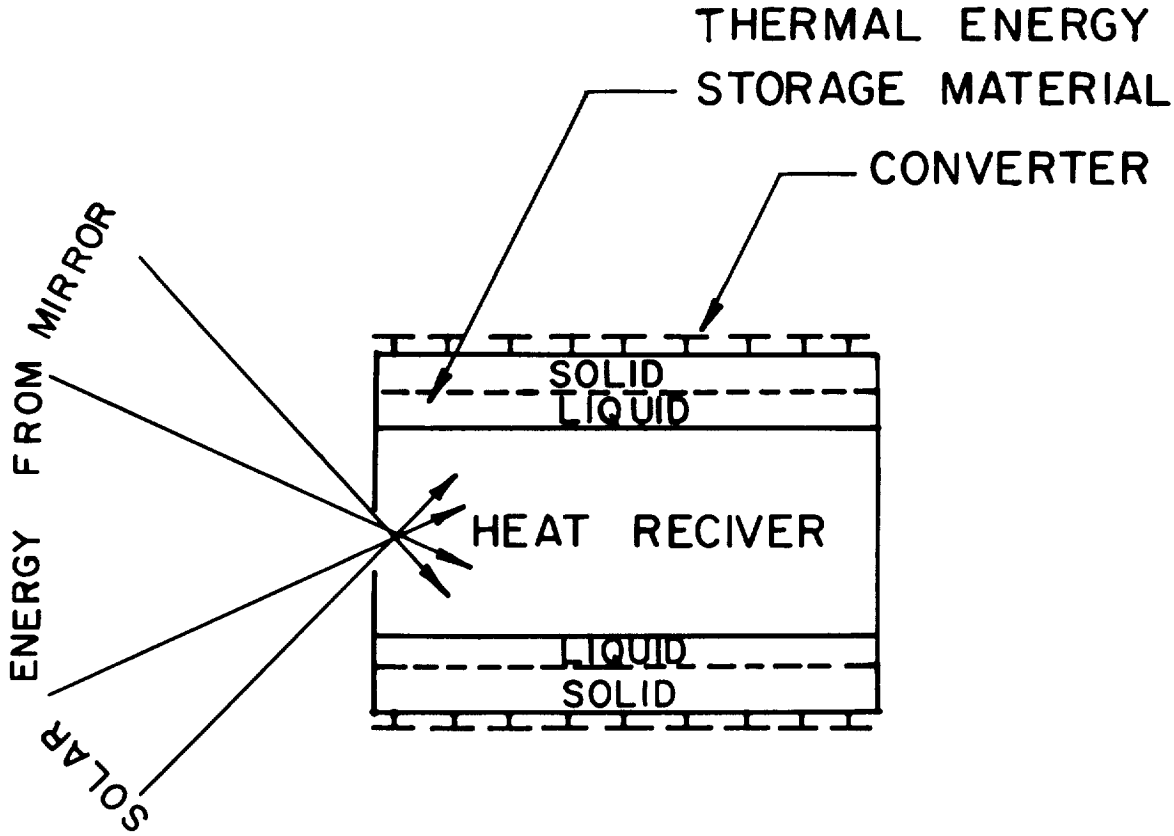

FIG.4 HEAT RECEIVER REF. 27

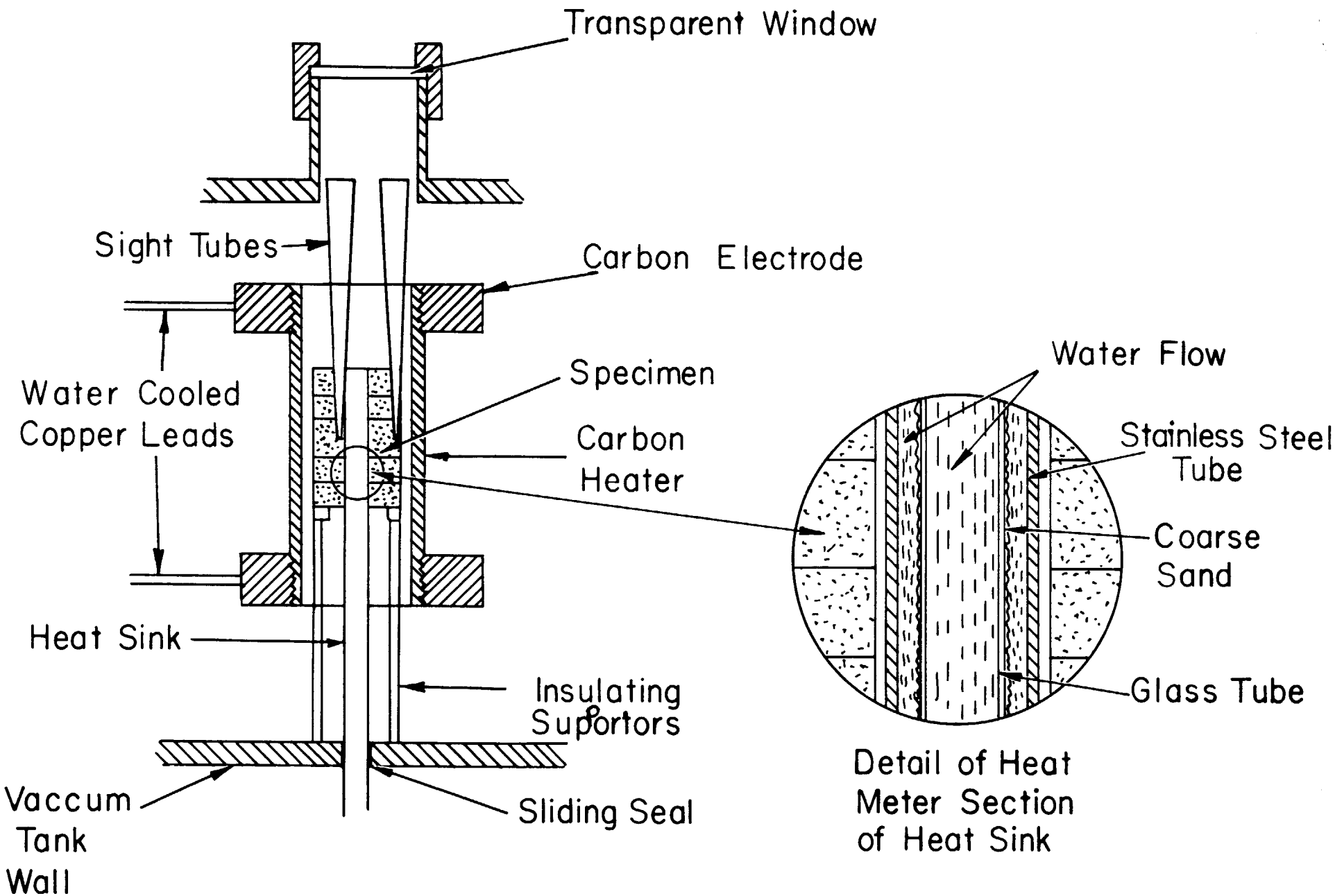

FIG. 5 CONDUCTIVITY APPARATUS

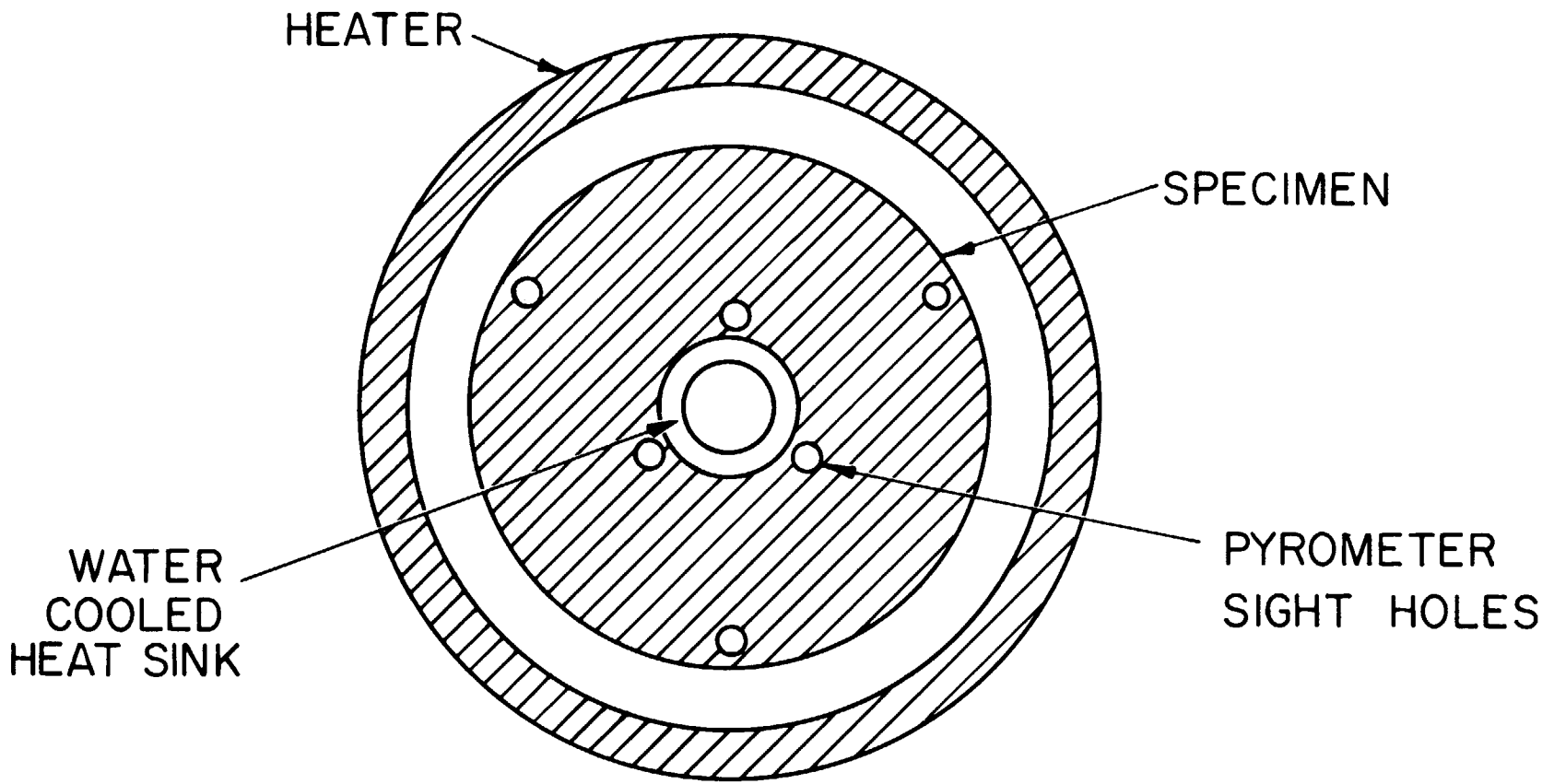

FIG.6 Configuration for thermal conductivity determination by external heating. Ref. 29

[redacted]

TID-7687 Supplement

Rept. not in 9-7-65

THERMOPHYSICAL AND TRANSPORT PROPERTIES OF HIGH TEMPERATURE ENERGY STORAGE MATERIALS*

R. A. Sharma and H. Chang
Institute for Direct Energy Conversion, University of Pennsylvania, Philadelphia, Pa.

In space exploration, some means of energy storage is necessary for solar-powered generators. This can be achieved by storing the solar energy either in an electrical form by using batteries or in a thermal form by using latent heat of fusion of some suitable material. The electrical energy storage has the disadvantage of high system weight and does not prevent heat losses from the generator when the vehicle is in the shade. The thermal losses result in thermal cycling. The accompanying thermal stresses would tend to materially shorten the life of the generator.

Consequently, it is desirable to look for alternative means of storing the energy in thermal form. Initial effort has been directed towards:

(1) the synthesis of likely materials
(2) determination of their physico-chemical properties
(3) the determination of their transient heat transfer properties.

The essential requirement of a thermal energy storage material is that it should have a large heat of fusion per unit mass (minimum considered here is 200 cal/gm.), and a melting point not above 2100°K, which is set here as the upper limit of the temperature cycle. In addition, these materials should be compatible with suitable containers. Because of the weight limitation, only the light metals and their compounds can be taken into consideration and on the basis of the data available in the literature the following tables of likely thermal energy storage material have been prepared.

Table I indicates the suitability of the materials B, Be, Si, Co, $CoSi_3$, and Mg_2Si for the thermal energy storage insofar as the heat of fusion to weight ratio is concerned. The use of boron, because of its high melting point of 2440°K, is ruled out while Be, Si, $CoSi_3$ and Mg_2Si may present difficult container problems.

Table II points out the suitability of the compounds Li_2O, BeO, MgO, CaO, Al_2O_3, LiF, BeF_2 and MgF_2 with heats of fusion of 470, 605, 460, 340, 260, 250, 274, 224 cals. per gm., respectively. Pure BeO, MgO, CaO and Al_2O_3 cannot be used as their melting points are above the temperature considered. The compounds Li_2O, LiF, and Mg_2F_2, appear to be some of the likely thermal energy storage materials, although the decomposition pressure of Li_2O is high at the melting point (1700°K). They also do not offer a wide range of temperature selection. This may be achieved by utilizing the eutectics of the refractory oxides or fluorides.

Unfortunately, even approximate heat of fusion data are not available for most of these mixtures.

---

*This work was supported by the National Aeronautics and Space Administration under Contract NsG-316 to the Institute for Direct Energy Conversion of the Towne School of Civil and Mechanical Engineering of the University of Pennsylvania.

Issued as a supplement to TID-7687, A Symposium on High Temperature Conversion, Tucson, Arizona, February 19-21, 1964.

TABLE III - BINARY SYSTEMS OF OXIDES OR FLUORIDES

Reference	System	Eutectic Composition X	Eutectic Temp. T_e °K	Estimated Heat of Fusion cals/gm.mole	cals/gm
(10,13)	CaO-BeO	0.67 BeO	1738	10000	283
(10,6)	MgO-BeO	0.67 BeO	2143	12000	400
(10,6)	CaO-MgO	0.5 MgO	2573	16300	340
(3,10)	LiF-NaF	0.39 NaF	925	5510	171
(3,6)	LiF-MgF_2	0.33 MgF_2	1015	6940	185
(6,10)	LiF-BeF_2	0.50 BeF_2	633	5580	153
(3,6,10)	MgF_2-BeF_2	0.90 BeF_2	948	10900	224

Table III should also have contained some eutectic mixtures containing Li_2O, but this has not been possible on account of the unavailability of phase diagrams. As may be seen from the table, the eutectic of CaO-BeO, MgO-BeO, CaO-MgO and BeF_2-MgF_2 appear to be suitable. Though the paucity of data does not allow any calculations for prediction, however, some ternary systems such as CaO-MgO-Li_2O, BeO-MgO-Li_2O, BeO-CaO-Li_2O, and CaO-MgO-BeO may cover a wider range, between 1500-2100° C, while the eutectics of LiF, BeF_2, and MgF_2 may be appropriate for temperatures of about 1000°K. The lowering of the fusion temperature may also overcome the dissociation problem of Li_2O. It might also be possible to use the eutectics, such as BeF_2 + BeO, MgO + MgF_2, etc., as the strong deviations from ideal behavior typical of such systems may be advantageous. The most disappointing thing about the systems considered above is that neither established phase diagrams nor accurate data on heats of fusion are available. Faced with this situation, the experimental effort has been directed initially at establishing the phase diagrams of the prospective systems by a differential thermal analysis technique. After establishing the phase diagrams and selecting the suitable mixtures, the next step will be to measure the heat capacities and heats of fusion of these materials by an isothermal dropping-type calorimeter. It is also intended to measure the volume change on fusion of these mixtures.

Further studies will be conducted to determine the thermal transient transport properties of some selected materials.

The Differential Thermal Analysis Apparatus (Schematic Diagrams in Figs. I & II)

This apparatus consists of a platinum-40% rhodium wire-wound furnace which gives temperatures up to 1750°C, a programmed controller with silicon-controlled rectifier toraise the temperature of the furnace, and adjustable zero and adjustable range recorder for recording the temperature, and a recorder with a ± 5 mv range for recording the differential E.M.F. The differential E.M.F. is amplified by a D.C. amplifier before being fed to the recorder.

The desired uniform heating rate of the furnace is obtained by means of a motor-driven cam which drives the control point of the proportional controller and so varies D.C. voltage. This D.C. voltage is applied to a silicon-controlled rectifier which regulates the power to the furnace windings.

For the present study, the apparatus consists of a tantalum heating element furnace and an isothermal dropping-type calorimeter. The main points considered in designing the apparatus are that the temperature of the sample should be uniform and accurately known. For this, special attention has been given to the design and fabrication of the furnace and the temperature is to be measured by an optical pyrometer checked frequently against a standard tungsten strip lamp and calibrated by a W/W-Re or Pt/Pt-Rh thermocouple.

The jacket of the furnace is water-cooled to prevent warming of the air which may transfer heat to the calorimeter. A water-cooled gate is provided between the furnace and calorimeter to prevent transferred energy by radiation between the two. The whole furnace and calorimeter space is gas-tight and can be evacuated to the pressures of 10^{-3} to 10^{-4} mm Hg. or maintained with a rigorously controlled atmosphere.

The operation of the water-cooled gate and sample-dropping mechanism is performed electrically, with a view to reduce the time taken for dropping a sample, thus reducing the transfer of heat from the furnace to the calorimeter. The description of the setup , Fig. 3, is as follows.

FURNACE

This has a tantalum heating element in the form of a cylinder of 2" diameter, made of a sheet 20" long and 0.005" thick. Three concentric molybdenum radiation shields surround the heating element to prevent heat losses. The shields and heating element are held in water-cooled copper rings which are connected to water-cooled electrical leads. The whole unit is encased in a water-cooled brass jacket. The furnace is to be operated with a voltage of 0-15v A.C. and a current of up to 500 amps. The temperature of the furnace is regulated by means of a Variac and a constant voltage transformer. The furnace is intended to give temperatures up to 2200°C. There is an arrangement to move the furnace up vertically through a distance of 14" on steel columns, for access to the calorimeter.

An isothermal calorimeter has been chosen for the measurements because of its simplicity in construction, instrumentation and operation. It has been designed on the principle of the ice calorimeter invented by Black (22), developed by Bunsen (23), and recently improved to a greater degree of precision by Ginnings and Corruccini(24). In this method, a sample of some desired temperature is dropped into a chamber surrounded by a pure substance in solid-liquid equilibrium (e.g. ice and water). The heat evolved is absorbed by the chamber, melts some of the solid, and is subsequently determined by measuring the accompanying proportioned change in volume. In the present calorimeter, diphenyl ether, instead of water, has been chosen. The thermodynamic properties of diphenyl ether are accurately known (25), and the melting point is 300.03^{o} K. It is easy to maintain a thermostatically-controlled bath at this temperature and only a small correction is needed in the data to standard room temperature (298.15^{o} K).

CALORIMETER

The main body of the calorimeter consists of a copper tube well of 2" diameter extending up to the furnace. The whole space is gas-tight and can be evacuated simultaneously with the furnace. Radiation from the furnace is prevented by introducing the electrically operated water-cooled gate. The conduction losses from the calorimeter are reduced by incorporating a tubular Iconel section about 8" from the bottom of the well. The sample will fall into a 6" copper tube inside the well. This tube fits closely in the calorimeter well and contains baffles and copper turnings; baffles will prevent upward radiation and convection heat losses from the

from the above considerations that the mode of heat transfer in the system under consideration is neither a simple conduction nor a radiation but consists of both taking place through a material made of solid and liquid phases. Further, the data are required in the transient state. In the literature, even the data for the simple conductivity of these materials at the desired temperatures are not available, except that the thermal conductivities of BeO, CaO, MgO and Al_2O_3 in their solid states are reported at 1670°K as 0.0362, 0.0174, 0.0144 and 0.0131 cal $sec.^{-1}$ cm^{-1} $^{o}C^{-1}$ respectively (11). Also, the thermal conductivity of "salt A" (11.5 mol -% NaF, 42.5 mol -% KF and 46.0 mol - % LiF) in the liquid phase for temperatures of 490°C to 850°C is given as 0.0057 to 0.0129 cal $sec.^{-1}$ cm^{-1} $^{o}C^{-1}$ (28).

In view of this situation, it has been decided to design the initial experiments to measure the thermal conductivity of the selected thermal energy storage material in the solid phase, under the conditions of steady state heat transfer. In the process to be adopted, heat is passed from an external heater through the cylindrical specimen to a heat sink along its axis. Conductivities can be determined from the radial temperature drop across the specimen and the heat flow into the heat sink by the relation

$$k = \frac{q \ln {}^{r_2}/_{r_1}}{2\pi \quad L \ (\Delta T)} \qquad (1)$$

where r_1 and r_2 are the respective distances of the inner and outer sight holes from the axis and L is the length of the specimen over which the heat flow is measured.

Apparatus, slightly similar to Rasor's (29) and placed in a chamber with vacuum or controlled atmosphere, is as follows:

The heater, Fig. 5, is a hollow graphite cylinder 8" long, 2.5" inside diameter, and 1/8" thick. The cylinder has a series of parallel grooves engraved on its outer surface, to a depth of half the wall thickness. The grooves are parallel to the base of the cylinder. There are two sets of grooves, each alternating from the other by 90°. This arrangement prevents mechanical weakening of the heater. The heater is screwed into two carbon blocks of 5" diameter and 2.5" deep. The blocks have cylindrical holes equal to the diameter of the heater. The carbon blocks are connected through water-cooled copper tubes to a step-down transformer with a secondary rating of fifteen volts at 600 amps. The primary of the transformer is connected through a Variac to the power source. The heater is expected to give the desired temperature.

The heat sink, which also serves as a heat meter, consists of a 3/8" diameter stainless steel or molybdenum tube with walls 0.010 inch thick, along the axis of which is a 6 mm o.d. glass tube of 1 mm wall thickness. The sink tube extends along the axis of the heater from its bottom to the top up to the sight tube. Water or helium flows through the annulus between the inner and outer tubes. The external surface of the steel tube is blackened with carbon to increase the radiant heat transfer and to eliminate adverse effects of non-uniformity which may occur during operation of the furnace. The inner glass tube is coated with coarse sand to obtain turbulence for better heat transfer.

REFERENCES:

1. A. W. Searcy and C. E. Myers, J. Phys. Chem. 61 957 (1957)
2. O. Kubaschewski and E. L. Evans, Metallurgical Thermochemistry (1955)
3. K. K. Kelly, U. S. Bureau of Mines Bulletin 584 (1960)
4. M. Olette, Physical Chemistry of Steelmaking, John Wiley, 478 (1952)
5. A. Schneider and E. K. Stall, Z. Electrochem. 47, 527 (1941)
6. JANAF Thermochemical Data Interim Table, Dow Chemical Co. issued December 31, 1960, September 30, 1963
7. E. E. Schumacher, J. Am. Chem. Soc. 48 396 (1926)
8. L. J. Kanelt, Washington Academy of Science, 3, 315 (1931)
9. O. Kubaschewski and W. H. Dency, J. Inst. Metals 82-87 (1953)
10. Phase Diagrams for Ceramics, American Cer. Soc. (1956)
11. E. F. Batutis, Final Report--Thermal Energy Storage, Research & Development Program, Dec. 6, 1960 to Dec. 1, 1961 G.E. Co., Philadelphia
12. H. H. Glasscock, Jr., J. App. Phys. 33, 3296-8 (1962)
13. V. V. Kandyka, P. B. Kanter, Metal. Dokl. Akad. Nauk. SSSR, 131, 5, 556 (1960)
14. W. Eitel, Zement 27, 469-72 (1938)
15. Von P. Pascal, Z. Electrochem. 19 611 (1913)
16. W. J. McCreary, J. Am. Chem. Soc. 77, 2119 (1955)
17. P. P. Budnikov and S. G. Tresvyatski, Dokl. Akad. Nauk. SSSR 89 481 (1953)
18. A. S. Berezhnoi, Dobovidi Akad. Nauk. UKR RSRP 250 (1951)
19. Handbook of Chemistry and Physics (1962)
20. A. G. Berezhnoi, E. P. Dergunov, Comp. Rend. Akad. Sci. SSSR 31, 755 (1941)
21. Giovanni Venturello, Reale Accad. Sci. Torino Atti. 76 Part I 559 (1941)
22. "Calorimetry," Encyclopedia Brittanica (1957)
23. R. Bunsen, Pogg. Ann. Physik, 141, 1 (1870)
24. D. C. Ginnings and R. J. Corrucuni, J. Res., Nat. Bur. Standards 38 583 (1947)
25. G. T. Furukawa, D. C. Ginnings, R. E. McCoskey and R. A. Nelson, J. Res., Nat. Bur. Standards, 46, 195 (1951)
26. G. J. London, A. R. Ubbdohde, Tr. Faraday Soc. 52, 647-651 (1956)
27. M. Altman, D. P. Ross, and H. Chang, "The Prediction of Transient Heat Transfer Performance of Thermal Energy Storage Devices," AIChE Preprint No. 56, Sixth National Heat Transfer Conference.
28. J. R. Spann, C. T. Ewing, B. E. Walker and R. R. Miller, "Thermal Conductivity of Salt 'A'," NRL Report 5144, Naval Research Laboratory, Washington, D. C. (April 1958)
29. N. S. Rasor and J. D. McClelland, "Thermal Property Measurements at Very High Temperatures," Rev. of Sci. Inst. 31 (6) 595-604 (1960)
30. R. A. Sharma, G. R. Belton, University of Pennsylvania, (paper to be published).

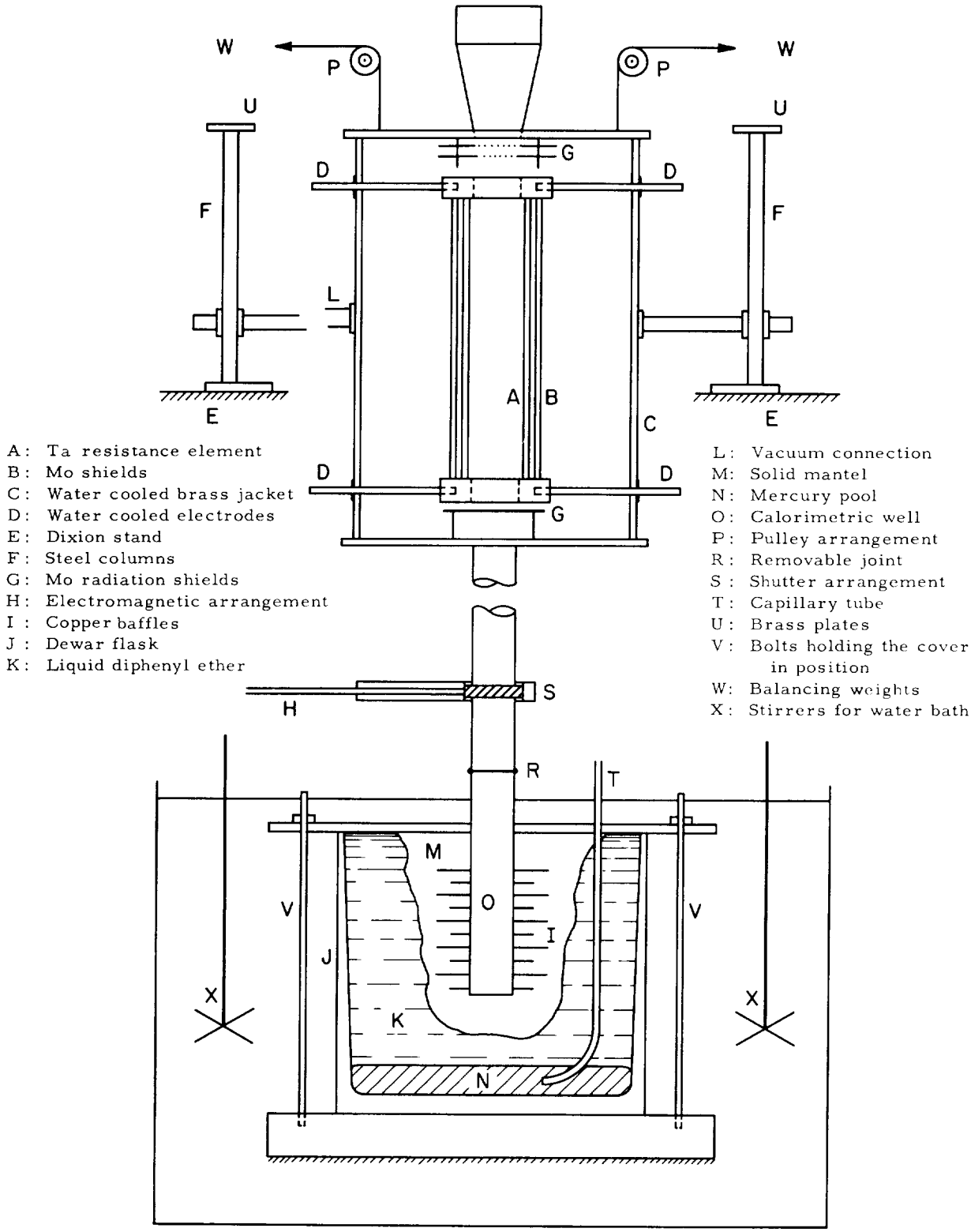

Fig. 3. Isothermal Calorimeter

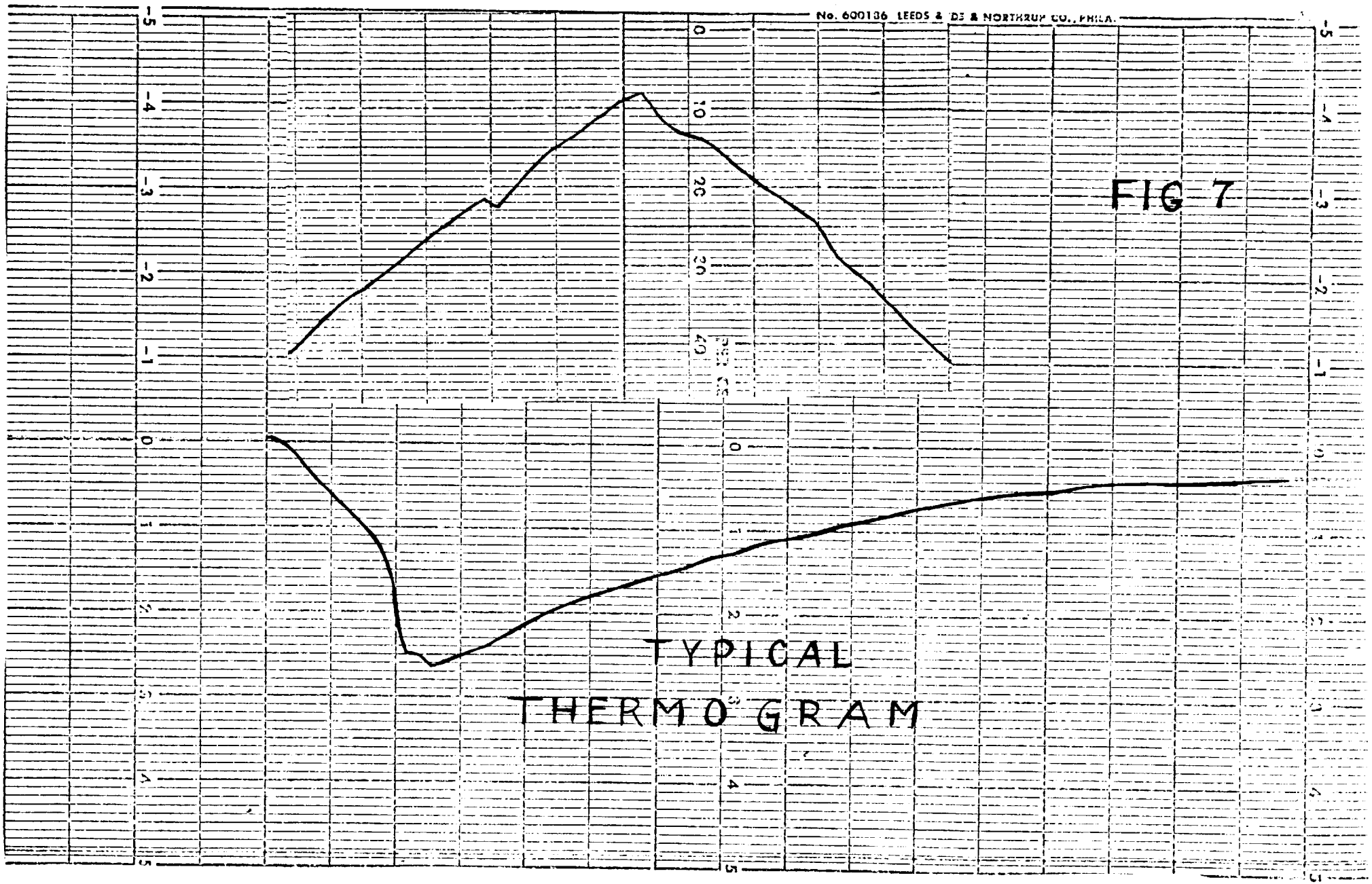
No. 600136 LEEDS & NORTHRUP CO., PHILA.
FIG 7
TYPICAL
THERMOGRAM