FACILITY FORM 602

N66-16186
(ACCESSION NUMBER)

(THRU)

11
(PAGES)

1
(CODE)

CR 69377
(NASA CR OR TMX OR AD NUMBER)

11
(CATEGORY)

GPO PRICE $ _____

CFSTI PRICE(S) $ _____

Hard copy (HC) 1.00

Microfiche (MF) .50

ff 653 July 65

OKLAHOMA STATE UNIVERSITY

NASA GRANT NsG-454

December, 1965

PROGRESS REPORT ON NASA NsG-454 FOR

JUNE 1 TO NOVEMBER 30, 1965

By J. A. Wiebelt and

D. Maples

Prepared Under Grant Number NsG-454 by
School of Mechanical Engineering
Oklahoma State University
Stillwater, Oklahoma

for

NATIONAL AERONAUTICS AND SPACE ADMINISTRATION

INTRODUCTION

This report is to cover the progress on NASA grant NsG-454 for the six month period from June 1, 1965 to November 30, 1965. The grant purpose was to examine analytically and experimentally the feasibility of using movable fins on a surface for spacecraft temperature control. For this system, the geometry proposed is shown in Figure 1.

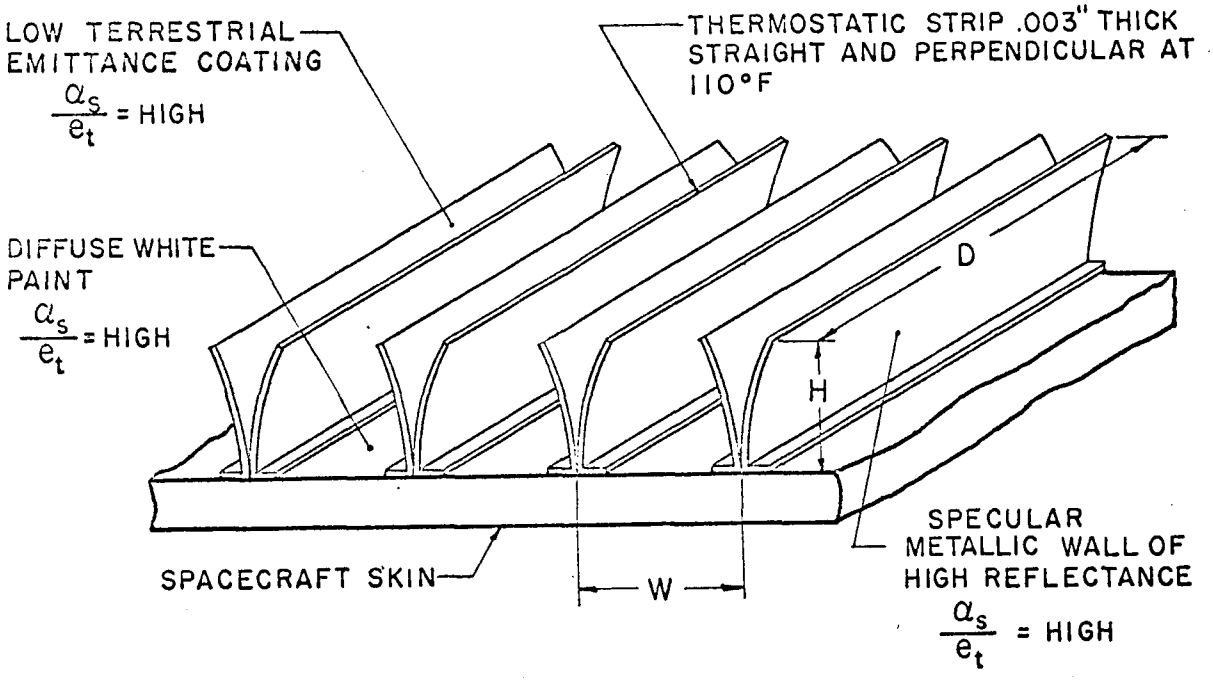

Figure 1. Temperature Control Surface

Analytical work to date was reported in NASA CR-91 (1)* and NASA CR-155 (2)* for the system with fins constructed of bimetallic material. As a result of the analytical information, several experimental tests were devised. The first of these tests was described in the progress report dated June 1, 1965. In this test series a model with two-inch fins spaced two inches apart was constructed. This model was tested in the space simulation facility at Goddard Spaceflight Center. Results of these tests were not considered to indicate that the model would act as a suitable temperature control system. This conclusion was reached upon noting that the thermostatic fins reacted primarily to the solar irradiation rather than to the spacecraft skin material.

After the initial series of tests were concluded it was decided that further testing should be carried on at Oklahoma State University in a small space simulator to be constructed from miscellaneous surplus equipment. This six month period has been primarily involved in the construction of the simulator vacuum system, cold wall liner, and test fixtures. Also a modified fin system

*Numbers in parenthesis refer to references at the end of the report.

was devised in an attempt to avoid the undesirable coupling of fin movement to solar irradiation. This system was tested in a cold wall test which will be described.

Space Simulation System Construction

A small space simulator was constructed using surplus equipment from several sources. The basic container was a stainless steel chamber 24 inches in diameter and 48 inches long. A liquid nitrogen cooled liner 18 inches in diameter and 27 inches long was mounted inside the stainless chamber. Two views of the chamber and the liner are shown in Figures 2 and 3. The chamber is evacuated using one six-inch oil diffusion pump with a low temperature baffle. As can be seen in the photographs, a six-inch flanged window port was provided on the front of the chamber.

This chamber was assembled and leak checked during the initial portion of the six month period. In its present configuration the chamber may be opened and closed and will regularly pump down to the 10^{-5} torr range with no nitrogen cooling. With liquid nitrogen cooling, the typical chamber pressure is in the 10^{-7} torr range.

A General Electric type 151 six-inch quartz window is available to fit the six-inch flanged opening on the front of the chamber. This window is for the solar simulator beam. Solar irradiation will be simulated with either a 2.5 KW Hanovia Xenon arc lamp system or two large carbon arc lamps. At the present time, the Xenon arc is being considered because of the cleanliness and ease of operation. This solar simulation system will be delivered for use on two research projects. It is anticipated that the system will be available for testing about 50% of the time. In the use of the Xenon arc lamp system, ultra-violet simulation will be accomplished. This will require extra care in the selection of material for the temperature control systems.

Modified Temperature Control System

As indicated in the introduction, the thermostatic fin system as originally conceived appears to react unfavorably in the presence of solar irradiation. An attempt to avoid this problem which is being considered is shown in Figure 4. Since this photograph does not show the details of the fin system a descriptive drawing is shown in Figure 5. As shown in Figure 5, the thermostatic material was connected to the base material with a larger area of contact and the upper portions of the fins were made of a poor thermal conductor. The purpose of this system was to reduce the heating effect of the solar environment.

For testing purposes, these fins were made with a two-inch height and one-inch spacing. This fin system would have a larger solar absorptance in the grooves due to the geometry, but it was believed that the greater activity gained by the increased length was advantageous.

This control system was mounted over a heater and insulated with multi-layered aluminum insulation as shown in Figure 6. A cold wall test of the fin system was

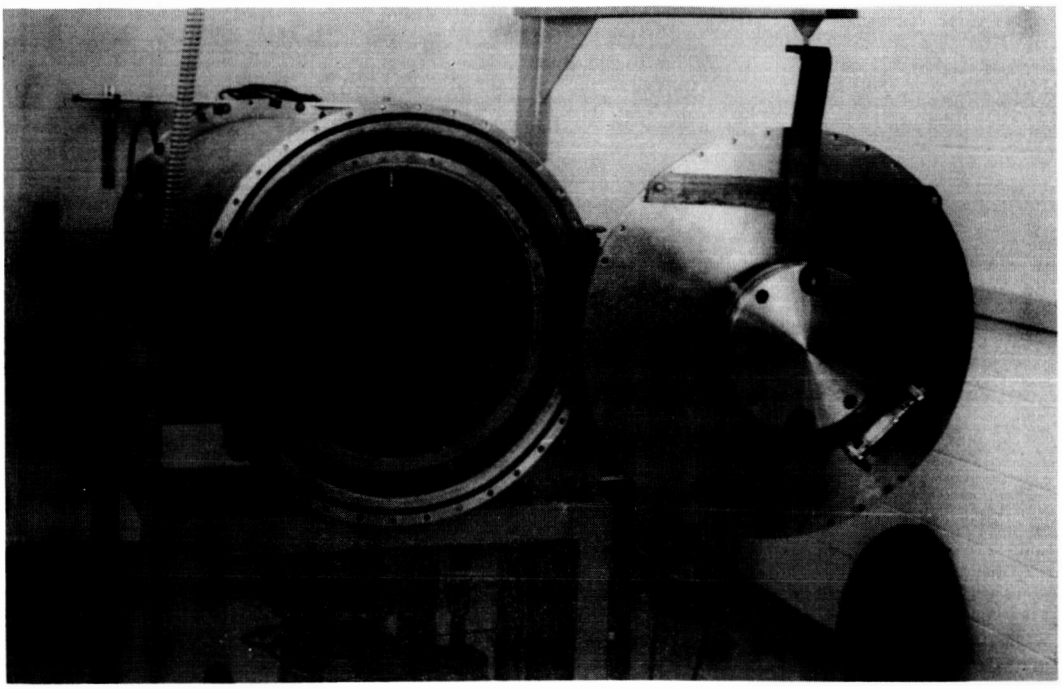

Figure 2. View I of Small Space Simulator

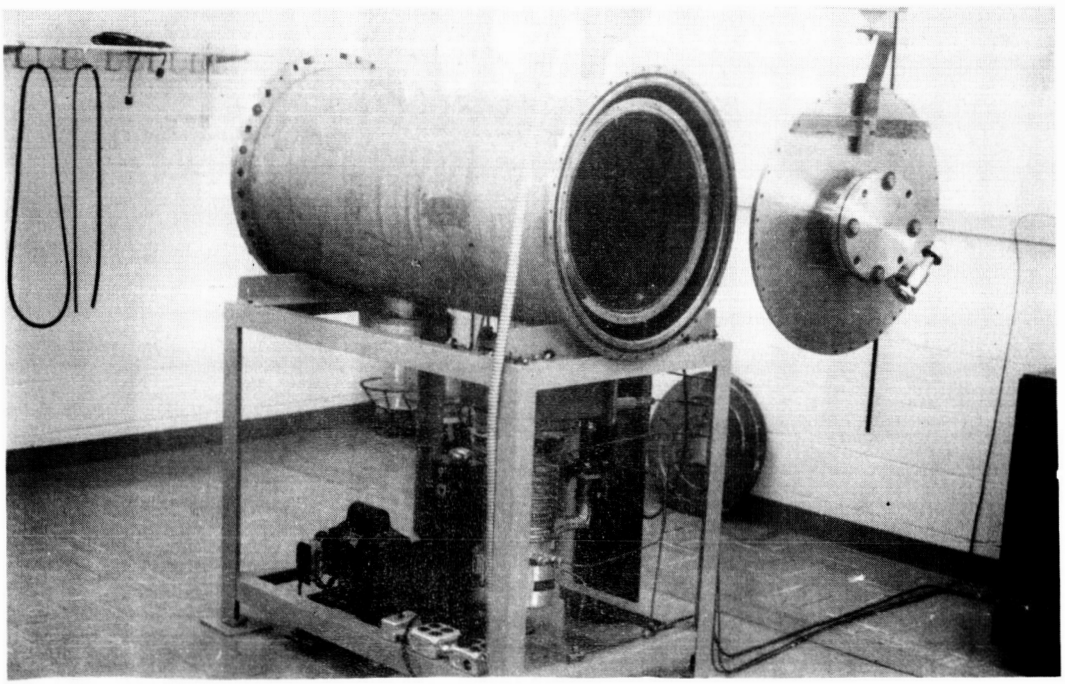

Figure 3. View II of Small Space Simulator

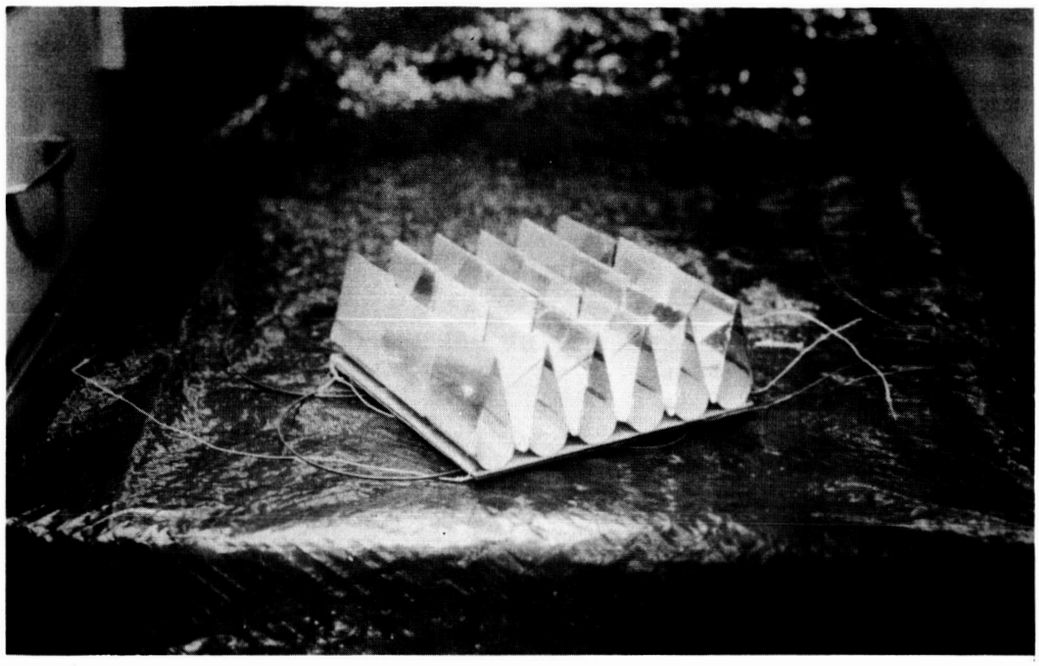

Figure 4. Modified Fin System (Photograph)

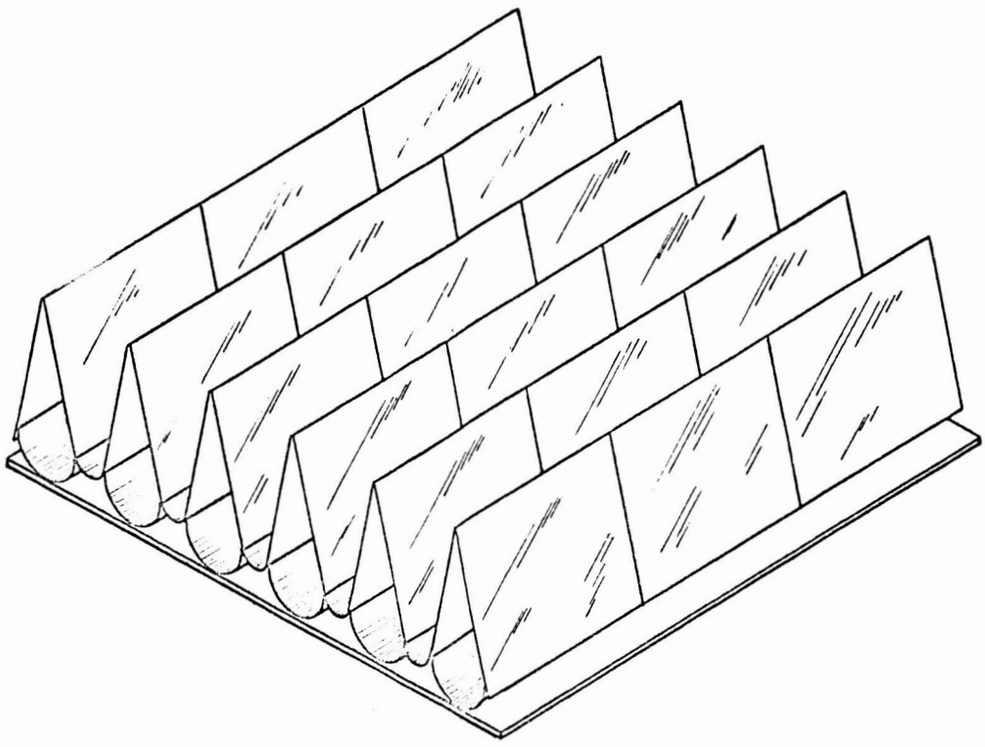

Figure 5. Modified Fin System (Pictorial)

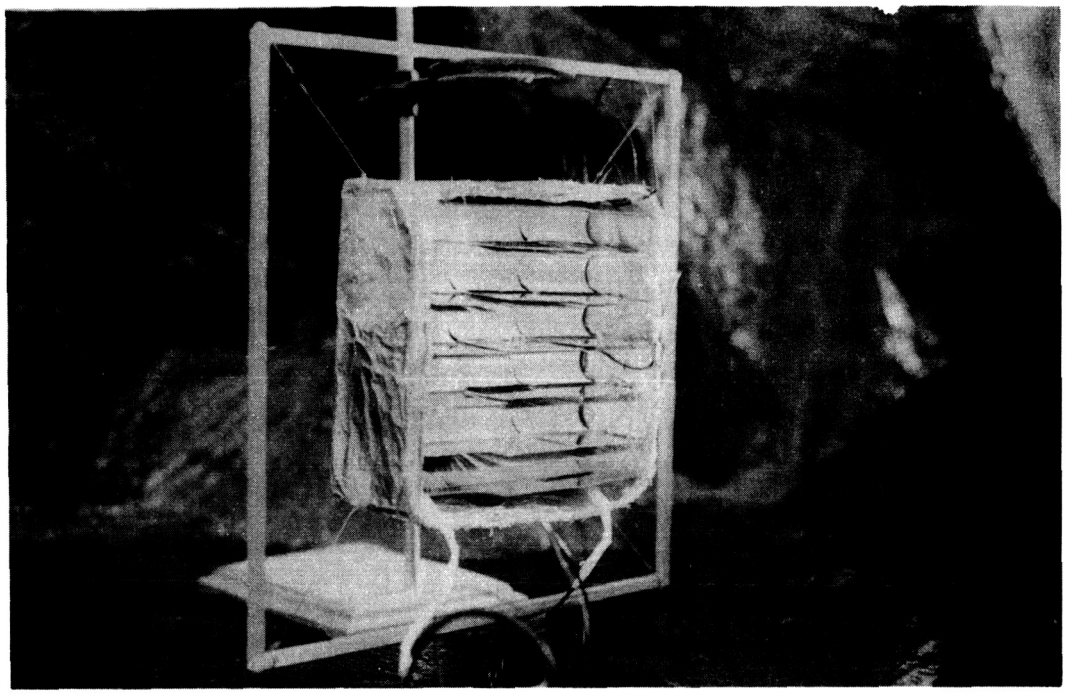

Figure 6. Fins in Test Fixture

run with very unreliable results. After the completion of the test, examination of the test system showed a complete covering of the system with oil. This oil was determined to have come from a Glyptal painted heater element.

A secondary result of this test was the observation that energy loss from the insulation could not be predicted. While other models were being prepared, a test insulation system was devised. This consisted of nine layers of aluminum foil with a porous cloth spacer between each layer. Two separate identical halves were built with inner dimensions of 3 inches by 6 inches by 6 inches. These two halves were sandwiched over an improved heater and suitably instrumented with thermocouples. A schematic of the system used along with thermocouple locations is shown in Figure 7.

Since the measured properties were not expected to be a function of the temperature, tests were made with the cold wall liner at room temperature. The data obtained from these runs is shown in Table I. This data was analyzed on the basis that the heater element was isolated by the insulation box from the cold wall enclosure. In a simplified manner, this would result in energy loss from the heater as shown in the sketch of Figure 8.

For analysis purposes, the energy leaving the heater could be considered as being transported by radiation. This energy would be transported from the heater surfaces at T_1 to the inner wall at T_2, then through the multilayer shield to T_3, and finally from the outer shield surface to the cold walls at T_4. Considering

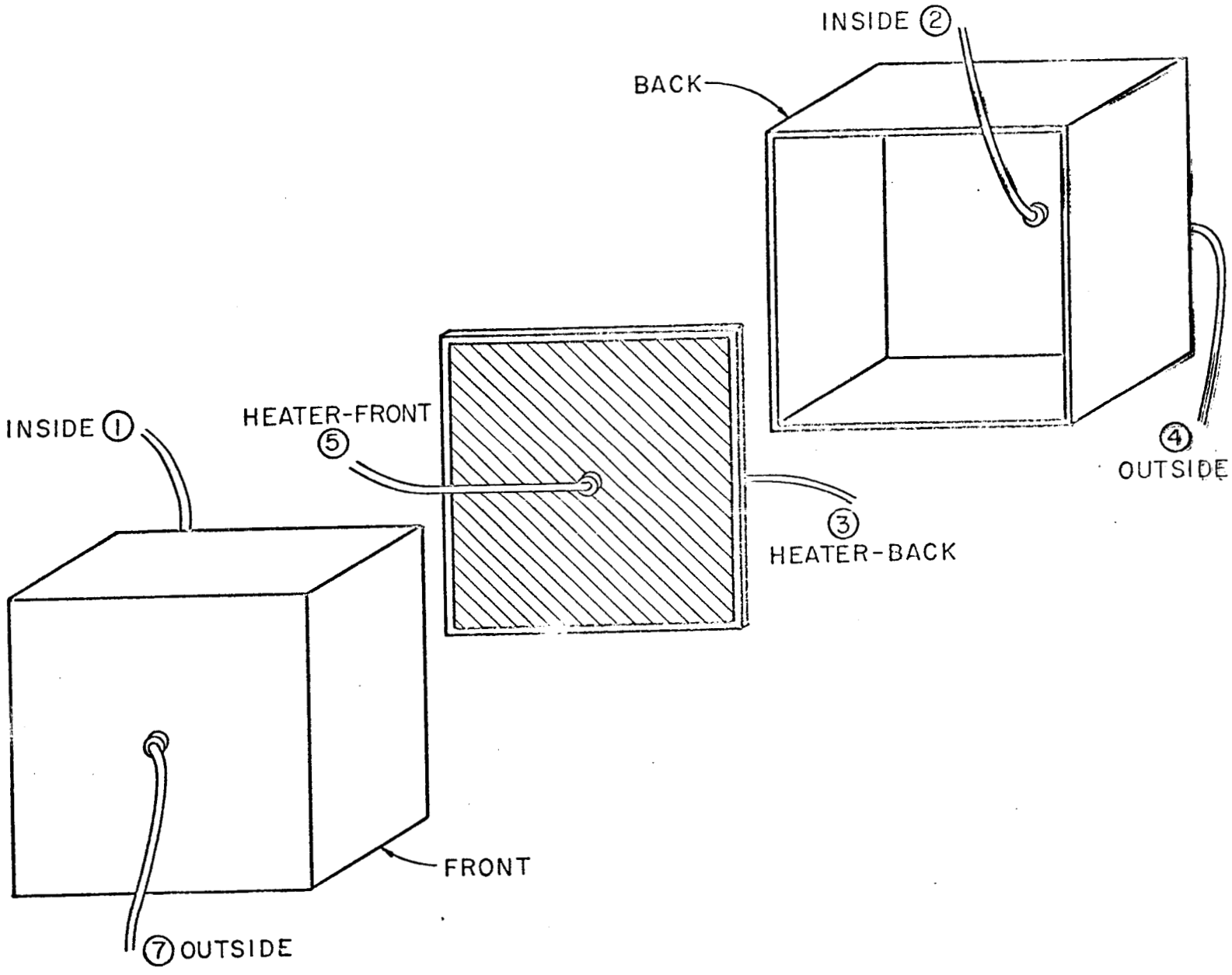

Figure 7. Insulation Test System

TABLE I

INSULATION BOX TEST DATA

Run No.	Pressure Torr	Power Input Watts	Temperatures in °F 1	2	3	4	5	6	7	8	9
1	4×10^{-3}	0.765	150	153	163	88	162.5	148	87	87	78
2	95×10^{-3}	1.12	98	100	117	89	117	98.5	88.5	87.5	79
3	80×10^{-3}	2.55	168	177	230	123	229	170	121	115	79
4	82×10^{-3}	1.10	94	96	113	84	112	94	84	83	74
5	4.4×10^{-5}	1.10	202	205	215	101	215	200	96	95	79
6	3.2×10^{-5}	0.777	184	186	194	98	193	182	94	93	80
7	2.5×10^{-5}	0.578	158	159	166	92	166	156	88	88	79

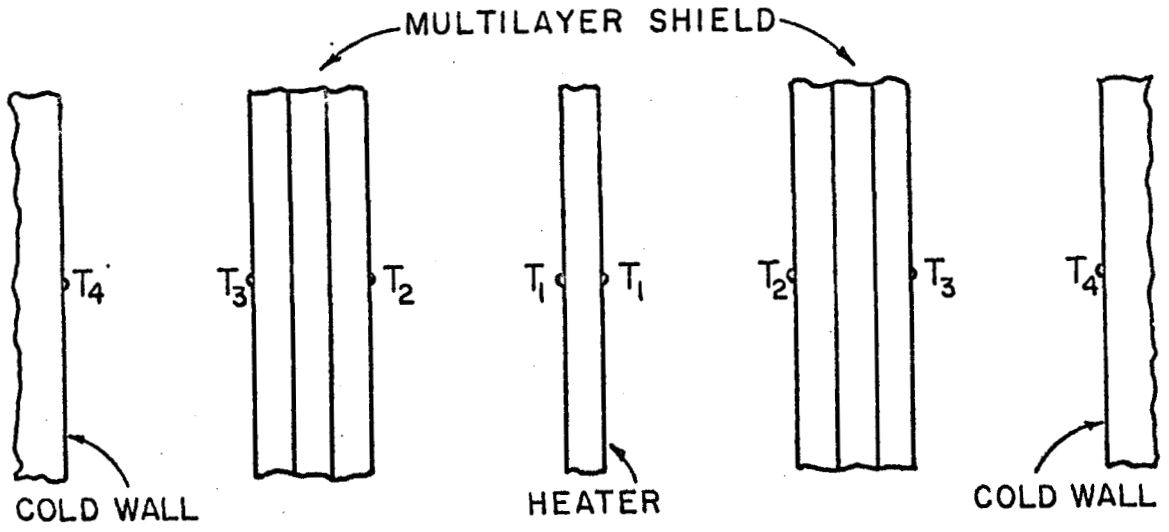

Figure 8. Sketch of Insulation Box for Analysis

these energy flows by radiation the following equations can be written.

$$q = K_{12}\,\sigma\,(T_1^{\,4} - T_2^{\,4}) = K_{23}\,\sigma\,(T_2^{\,4} - T_3^{\,4}) = K_{34}\,(T_3^{\,4} - T_4^{\,4})$$

In this expression K_{12}, K_{23}, and K_{34} should not be strong functions of the temperatures. Using only data from runs 5, 6, and 7 these values were calculated. (Runs 1 through 4 were not used because of excessive pressure in the vacuum chamber). The results of the calculations are tabulated in Table II.

TABLE II

INSULATION BOX TEST RESULTS

Run No.	K_{12}	K_{23}	K_{34}	Max % Deviation From Mean Value
5	0.128	0.02305	0.1954	8%
6	0.138	0.02015	0.1682	7%
7	0.1322	0.0212	0.180	1%

As can be seen the insulation test was very successful and resulted in a test fixture for which the energy flows could be calculated with errors less than 10%. This accuracy is satisfactory since a majority of the energy input to test models will go through the control surface rather than through the insulation.

Cold Wall Test of Thermostatic Fin System

After the insulation box was prepared and tested, a fin system with two-inch fins on two-inch spacing with "as received" fin surfaces was prepared. This model was six-inches square as compared to a previous one foot square model tested at Goddard Spaceflight Center. At the present time this model is mounted in the vacuum chamber and will be tested for effective emittance with cold walls. It is anticipated that these tests will indicate the advisability of continuing any two-inch thermostatic fin system tests. It is conceivable that such a system might be of value for temperature control on spacecraft which are oriented in space relative to the sun. This type control is similar to the present louver systems in use on the Mariner spacecraft.

A second thermostatic fin model with one-inch fins and one-inch spacing is being prepared. This model will have aluminized fins with a Dow Corning white paint base. A six-inch square model will be prepared and will be tested for effective emittance as a function of base temperature and solar absorptance. This will be carried out in separate tests, first with no solar irradiation and then with solar irradiation. These tests should result in curves of effective solar absorptance and effective emittance as a function of base temperature.

Proposed Future Work

Since most of the tests which have been run with the fin system constructed of bimetallic material have been unsatisfactory, it is proposed that a set of models be constructed with immovable fins. These models would have fins of one-inch height on one-inch spacing over a six-inch square model. With plane fins in known positions, the effective emittance and effective absorptance can be measured without the unknown action of the bimetallic fin elements. If these fins show characteristics which are desirable for a temperature control system, the method of moving the fins could be redesigned. That is, it is proposed that the experimental model be constructed to agree with the analytical model.

Several of the rigid fin models will be constructed and tested for the important parameters. These models will have fin positions varying from completely closed to completely open positions. In order to approximate the analytical model, the fins will be aluminized polished material, probably plastics. A good white paint will be used on the base material. These models are presently being designed.

Another item to be attempted during the next six-month period will be coating of thermostatic fin material with white paint. A methly-silicate base Dow Corning paint will be used as the test paint. This is being considered because of the possibility of decoupling the fins from the solar irradiation in this manner.

These tests plus the installation and calibration of the solar simulator will be the goals of the research effort.

References

1. Wiebelt, J. A., and J. F. Parmer, "Spacecraft Temperature Control by Thermostatic Fins-Analysis", NASA CR-91, August, 1964.

2. Wiebelt, J A., J. F. Parmer and G. J. Kneissl, "Spacecraft Temperature Control by Thermostatic Fins-Analysis Part II," NASA CR-155, January, 1965.