NASA CONTRACTOR REPORT

NASA CR-409

NASA CR-4
c. 1

TECH LIBRARY KAFB, NM
0099618

LOAN COPY: RETURN TO
AFWL (WLIL-2)
KIRTLAND AFB, N MEX

BROAD APPLICATIONS OF DIFFUSION BONDING

by B. R. Garrett, G. F. Blank, and A. J. Ranadive

Prepared under Contract No. NAS 7-273 *by*
HEXCEL PRODUCTS, INC.
Berkeley, Calif.

for Western Operations Office

RECEIVED
25 MAR 1966
Technical Library
AF Weapons Laboratory

NATIONAL AERONAUTICS AND SPACE ADMINISTRATION • WASHINGTON, D.C. • MARCH 1966

TECH LIBRARY KAFB, NM

0099618

NASA CR-409

BROAD APPLICATIONS OF DIFFUSION BONDING

By B. R. Garrett, G. F. Blank,
and A. J. Ranadive

Distribution of this report is provided in the interest of information exchange. Responsibility for the contents resides in the author or organization that prepared it.

Prepared under Contract No. NAS 7-273 by
HEXCEL PRODUCTS, INC.
Berkeley, Calif.

for Western Operations Office

NATIONAL AERONAUTICS AND SPACE ADMINISTRATION

For sale by the Clearinghouse for Federal Scientific and Technical Information
Springfield, Virginia 22151 – Price $2.25

FOREWORD

This report describes the work done under Contract NAS7-273, "The Study of the Broad Application of Diffusion Bonding," for National Aeronautics and Space Administration, Western Operations Office, Santa Monica, California. The contract was initiated with an overall objective to establish the important parameters in diffusion bonding, the range of material characteristics which allows the process to be performed, and a definition of the problem areas involved in the process. This report covers the results of the study.

The project and technical manager for this contract is Norman J. Mayer, Chief, Advanced Structures and Material Application, NASA, Washington, D. C.

ABSTRACT

Results are presented of a study of the broad application of diffusion bonding. A comprehensive literature survey of the present status of diffusion bonding has been conducted and the information incorporated in the report. The relevant aspects of "Diffusion Theory" have been outlined, followed by a detailed discussion of the fundamental factors governing the diffusion bonding process. The status of the process has been delineated through a presentation of the practical applications and the experimental data on diffusion bonding. Consideration has been given to the development of a logical framework for the selection of a diffusion bonding technique for new joining applications. Areas in which further work is needed for developing the reliability of the process and broadening its applications have been described. Finally, the future potential of diffusion bonding has been reviewed by outlining the material characteristics and structures which appear to be amenable to joining by diffusion bonding. This study will provide assistance in the selection or rejection of a diffusion bonding technique for specific joining applications.

POTENTIAL

A. INTRODUCTION

The potential of diffusion bonding lies in specialized joining applications where retention of the solid state is important. For economic reasons, this process will probably not see broad application in the same sense that ordinary fusion welding techniques are now utilized. It will be employed to an increasing degree in making high strength joints where optimum properties at temperature are required. In the past, diffusion bonding has produced reliable metal bonding needed in modern nuclear reactor fuel elements. Aerospace structural requirements of the future will demand fullest utilization of the properties of available materials. To meet this requirement, it will be mandatory to use joining techniques that do not degrade material properties.

It is emphasized that many of the future applications of diffusion bonding will result from the ability to retain material properties during the diffusion bonding process. When this consideration is of consequence, diffusion bonding must be considered as a joining technique.

In general, some research will be required before reliable joining of new materials can be accomplished. The level of such an effort will depend upon the material properties, the structural configuration and prior investigative work.

Here, the potential of diffusion bonding is discussed. The material and joint configuration characteristics which make the process attractive for joining applications are described, along with attendant limiting factors. Finally, some of the specific applications are described. These illustrations are intended only to be representative of future needs and are not indicative of process limitations.

B. MATERIALS

Theoretically, all solids can be joined by diffusion bonding. The technical feasibility of the process has been demonstrated for joining many metals and alloys, as well as various dissimilar metal and ceramic metal combinations (see Tables 3-1, 3-2 and 3-3).

The potential applications for diffusion bonding will be primarily with materials having high temperature service capability. The generally higher cost of diffusion bonding becomes justifiable when fabricating components for high temperature service. For lower temperature operation (e.g. below 1000 - 1500° F), proper selection of materials and a fusion welding technique will generally suffice.

The advantages of diffusion bonding which distinguish it from standard fusion welding processes and on which its future potential is based are:

(a) Solid state is maintained.

(b) Dissimilar metals can be joined.

The following discussion will cover the material characteristics which make diffusion bonding attractive.

1. Material Characteristics that Favor Diffusion Bonding

(a) Strain Hardening Metals and Alloys

Diffusion bonding, performed at temperatures below the melting point, minimizes the changes in base metal properties. Strain hardened metals derive strength and toughness through plastic deformation during fabrication operations. To heat such metals above their annealing and recrystallization temperature can result in undesirable and sometimes drastic loss of these properties. Examples include wrought steels, superalloys, beryllium, molybdenum and tungsten.

(b) Heat Treatable Alloys

Precipitation and solid solution hardening are the strengthening mechanisms in heat treatable alloys. Fusion disturbs the heat treated condition of these alloys and allows grain growth and segregation. Solid state joining is attractive because it avoids the changes of the heat treated condition which would ensue if the material were to be taken to fusion temperature.

(c) Composite Materials (Metallic)

With regard to fiber and particle strengthened composites, the special properties of these materials depend upon the distribution

and orientation of the "structural" constituent in the "matrix". Fusion welding methods generally cause agglomeration of the "structural" constituent in the weld zone and brazing results in a joint with properties of the brazing alloy. Solid state diffusion bonding produces fabricated structures retaining the properties of the constituent materials.

It is possible that electron beam welding, with its very small molten region, may be satisfactory for joining some composite materials. A decision for the use of electron beam welding or solid state diffusion bonding will depend on the joint configuration, joint accessibility, component size, economic considerations and other factors. Examples of materials in this class include TD nickel, APM (Aluminum Powdered Metal), Lockalloy (Be-Al), tungsten wire-reinforced copper composites and cermets.

(d) Highly Reactive Metals and Alloys

Diffusion bonding can be utilized to join these materials with reduced chances of contamination when compared with fusion welding. Brazing the reactive metals is frequently satisfactory, but consideration must be given to erosion and corrosion problems. Examples of metals in this group include zirconium, titanium and refractory metal alloys.

(e) Low Ductility Metals

Diffusion bonding techniques have been used for joining low ductility materials. Solid state bonds over large contact areas are formed between brittle materials and between ductile and brittle materials. For example, bonding of ceramic to metallic materials has become routine in the nuclear industry.

Another example is the diffusion bonding of beryllium accomplished at temperatures below 1400° F. Normally beryllium is joined by brazing at 800° F. Solid state joining provides encouragement for fabricating beryllium structures for use at temperatures as high as 1000° F and more.

(f) Incompatible Dissimilar Metals

Diffusion bonding of some metallurgically incompatible dissimilar metals has been achieved (Table 3-3). Application of diffusion bonding to the joining of dissimilar metals permits the engineer to employ wide design flexibility. A barrier metal is necessary, however, to prevent the formation of brittle phases and intermetallic compounds. Examples include cladding of uranium with aluminum using columbium or nickel as a barrier and the joining of nickel to molybdenum with a chromium barrier. Table 2-1 is a tabulation of metals employed as diffusion barriers.

Diffusion bonding of dissimilar metals holds great promise in the fabrication of components wherein optimization of physical

and mechanical properties is important. It is pointed out that such joints are generally more difficult to make than similar metal joints. It is necessary to produce a bond interface by diffusion that consists of one or more alloys having satisfactory mechanical properties.

C. JOINT CONFIGURATION

Diffusion bonding requires intimate contact between bonding surfaces. For this reason, the lap or overlap type of bond has been and will continue to be the principal joint configuration. By using special tooling, joints have been made in the T- and butt configuration, but the procedure is much more difficult.

Although diffusion bonding is limited in the type of joints that can be made, relatively large structures are fabricated by utilizing overlap joining. Fabrication will be expensive but high strength-to-weight ratio structures for elevated temperature service can be realized.

In summary, the desirable characteristics and the process requirements are listed below.

1. Desirable Characteristics

(a) Diffusion bonds are continuous and gas-tight.

(b) Multiplicity of joints may be made simultaneously. Continuous overlap joints over a large area are possible.

(c) Joints have been made in material as thin as .0001 inch.

(d) Complex structures may be fabricated with minimal dimensional change during fabrication. Post bond finishing may be avoided.

(e) Joint corrosion resistance will be similar to that of the individual metals because of the minimized change in base metal microstructure and composition.

2. Process Requirements

(a) Flat, smooth and clean mating surfaces are required. Special surface cleaning prior to bonding is generally necessary.

(b) Complex support tooling is required to fabricate sheet structures with hollow configurations.

(c) Joining large areas with high bonding pressures requires equipment capable of high force application at high temperatures. For example, to bond an area of 10" x 10" at a bonding pressure of 10,000 psi requires a force of 1,000,000 pounds if the pressure is applied through a die. The 10,000 psi could easily be attained with gas pressure equipment but, in this particular instance, the equipment size will determine the component size.

(d) Diffusion bonding is normally conducted in a protective atmosphere.

(e) Equipment costs can be expected to rise with increased bonding pressures and temperatures.

D. APPLICATIONS

The use of diffusion bonding techniques will certainly continue in the nuclear industry because of the continued need to join metallic and ceramic materials for applications which require high joint reliability and close dimensional tolerances.

In the aerospace industry, applications are seen for joining of the high temperature metals and for making dissimilar metal joints. The full utilization of base metal properties in a fabricated structure is an aim sought in critical, high temperature applications. Diffusion bonding is the joining technique offering the greatest potential to meet this goal.

Considering previously described material and joint characteristics, the following applications are envisioned.

1. Flat Materials with Overlap Joints

The number of joints formed at any one time can vary from one to thousands. A good example is honeycomb manufactured from foil by die pressure bonding. In this case, hundreds of sheets are bonded at one time and the HOBE* is expanded to honeycomb. With the anticipated need

---

* Trademark of Hexcel Products Inc.

for high temperature, high strength-to-weight ratio structures, future applications of this type of structure are expected.

The joining of electronic components with reliable control of the interface (i.e. crystal structure, dislocation density, impurity dispersion, etc.) will undoubtedly continue to be achieved through diffusion bonding.

2. Composite Structures

Composite structures are fabricated assemblies of similar and/or dissimilar materials in various geometrical configurations. The structures for which diffusion bonding has potential are discussed below.

(a) Filled Composites

These structures are composed of a skeletal network of a three dimensional array that forms the reinforcement for a filler material. The reinforcement could be a cellular honeycomb material or a sponge-like network of open pores. The filler is either a metallic, ceramic or an organic material.

The potential applications of diffusion bonding with respect to this kind of composite are evident in three areas:

(1) Fabrication of reinforcing material.

(2) Joining the reinforcing material to the support structure.

(3) Bonding the filler material to the reinforcing and support structure.

(b) Laminates

Laminates are structures made up of layers of two or more different materials. There are innumerable applications for laminates stemming from their individual and combined properties. Laminates are engineered materials wherein the physical and mechanical properties are carefully considered to produce a set of resultant properties which may be physical, chemical, mechanical or a combination. Diffusion bonding is well suited to joining of such materials. An interesting example is a three-layer laminate that was designed for repeated exposure to high velocity gases at 3600° F for periods of up to 1-1/2 minutes. The laminate consisted of a thick layer of copper diffusion bonded to thin layers of molybdenum and Type 316L stainless steel.[50]

(c) Sandwich Structures

Sandwich structures consist of two relatively thin face sheets bonded to a thick, low density core. This basic unit is used singly or in multiple units, or it can consist of a sandwich with a single facing sheet. The sandwich structure provides a very high section modulus per unit weight and has many uses in high strength-to-weight ratio applications such as airframe and missile construction.

There are numerous variations of cellular cores (Figure 3-3). Recent developments include patterns of nesting mushroom shapes

and cells with maltese cross configurations for added formability. Other variations include small tubes attached to the facings.

Joining of sheet and foil materials to make these high strength-to-weight ratio structures is logically a solid state joining process. Certainly, brazing should also be considered, but diffusion bonding holds the greater promise for maintaining base metal properties in the fabricated structure.

Recently diffusion bonded titanium honeycomb panels were made from titanium 75A core and titanium 8 Al-1V-1 Mo facings.[77]

3. Other High-Strength, Light-Weight Structures

This group includes the conventional structures with hollow configurations. Examples include sheet and stringer construction, I-beams, rib- and truss-supported wing structures, multiple channel constructions, etc. Such structures are widely used in airframe and missile construction.

The use of diffusion bonding for fabricating these structures is considered when:

(a) The desired joint cannot be satisfactorily made by standard fusion techniques.

(b) The function to be performed by the resultant structure demands the highest order of joint efficiency.

4. Other Structures from Thin and Medium Gauge Materials

Fabrication of foil and sheet structures by diffusion bonding must be considered when erosion and burn-through associated with brazing and welding are problems. Certainly, diffusion bonding is needed when a continuous bond area is required. Examples of some potential applications include fabrication of tubular shapes from superalloy and refractory metal sheet materials; fabrication of space radiators and heat transfer assemblies; and joining of dissimilar metals in tubular and flat sections.

E. SUMMATION

Diffusion bonding is an attractive joining process for the following types of materials:

Reactive Metals

Wrought Metals

Heat Treatable Alloys

Composites

Dissimilar Metals

Brittle Materials

Current limitations of diffusion bonding may be overcome through experimental work directed at understanding the phenomena of interdiffusion and thereby increasing joint reliability.

Increases in bonding temperatures and pressures must be accompanied by appropriate improvements in the equipment and tooling.

Lap joint configurations are most readily handled while T- and butt joints are possible but more difficult.

Composite and high strength-to-weight sheet structures provide a promising area for application of diffusion bonding. The developmental effort may be large, but the rewards of optimized high strength-to-weight ratio structures are substantial.

The need for diffusion bonding will continue to grow in the aerospace and nuclear fields. As the use of elevated temperature materials grows, the need for solid state diffusion bonding will increase.

TABLE OF CONTENTS

	Page
FOREWORD	iii
ABSTRACT	v
POTENTIAL	vii
Introduction	vii
Materials	viii
Joint Configuration	xii
Applications	xiv
TABLE OF CONTENTS	xxi
LIST OF FIGURES	xxv
LIST OF TABLES	xxvii
CHAPTER:	
1 DIFFUSION THEORY	1
A. Introduction	1
B. Macroscopic Considerations of Diffusion	1
C. Atomistic Considerations of Diffusion	3
D. Diffusion Mechanisms	3
E. Diffusion Paths	9
F. Diffusivity	12
G. Activation Energy for Diffusion	12
H. Diffusion in Binary Systems	14
I. Summary	17

TABLE OF CONTENTS (Continued)

CHAPTER:		Page
2	DIFFUSION BONDING FUNDAMENTALS	19
	A. Introduction	19
	B. Process Parameters	20
	C. Diffusion Bonding Practice	23
	Base Metal System	23
	Advantages	24
	Requirements	24
	Intermediate Metal System	25
	Advantages	25
	Requirements	31
	D. Practical Considerations	32
	Achievement of Intimate Contact	33
	Problems	33
	Methods of Achieving Intimate Contact	36
	Diffusion Across the Interface	39
	Problems	39
	Methods of Controlling Diffusion	42
	Dissimilar Metal Bonding	45
	Release Materials	50
	E. Summary	53
	Advantages	53
	Limitations	55

TABLE OF CONTENTS (Continued)

CHAPTER:		Page
3	STATUS OF DIFFUSION BONDING	57
	A. Introduction	57
	B. Diffusion Bonding Techniques	57
	1. Yield-Stress Controlled Bonding	58
	2. Diffusion-Controlled Bonding	67
	3. Creep-Controlled Bonding	80
	4. Transient Melt Diffusion Bonding	84
	C. Data on Practical Applications of Diffusion Bonding	89
	D. Experimental Work in Diffusion Bonding	100
	E. Summary	131
4	APPLICATION OF DIFFUSION BONDING	135
	A. Introduction	135
	B. Presentation	135
	C. Bonding Requirements	136
	D. Diffusion Bonding Format	137
	E. Proposed Developmental Work	141
	1. Intimate Contact	142
	2. Interdiffusion	143
	3. Tooling and Release Materials	145
	4. Thermal Stability	148

TABLE OF CONTENTS (Continued)

CHAPTER:		Page
4	APPLICATION OF DIFFUSION BONDING (Continued)	
	5. Diffusion Acceleration Aids	149
	6. Joint Evaluation	153
	F. Summary	156
CONCLUSIONS AND RECOMMENDATIONS		157
CITED REFERENCES		159
BIBLIOGRAPHY OF GENERAL REFERENCES		167

LIST OF FIGURES

Figure	Title	Page
1-1	Interstitial Diffusion	4
1-2	Vacancy Diffusion	6
1-3	Interstitialcy and Crowdion Mechanism	8
1-4	Direct Interchange of Neighboring Atoms	10
1-5	Ring Mechanism	10
1-6	Phase Diagrams and the Variation of $\overline{D}$ with Composition for the Isomorphous Systems Iron-Nickel, Copper-Palladium and Copper-Gold	16
2-1	Interdiffusion of Components of a Molybdenum Bar Plated with Nickel and Chromium After 600 Hours at 1100° C	27
2-2	Sketch Showing Contact between Surfaces of Varying RMS Roughnesses	35
2-3	Sketch Representation of Deformation Process	38
2-4	Sketch of a 100X Photomicrograph showing Interfacial Voids	41
2-5	Void Formation due to Kirkendall Effect	43
3-1	Pressure Welding of Girth Joints in Steel Pipe	60
3-2	Exploded View of Roll-Welded Pack Ready for Hot Rolling	64
3-3	Some Examples of Roll-Welded Titanium Alloy Sandwich Structures	65
3-4	Sectional View of Cold-Wall, High-Pressure Autoclave	69
3-5	Gas-Pressure Bonded Flat-Plate Assembly with Coolant Channels	71

LIST OF FIGURES
(Continued)

Figure	Title	Page
3-6	Gas-Pressure Bonded Sheet Structures	72
3-7	Hydraulic Press Used for Die Pressure Bonding Honeycomb Core	75
3-8	Diffusion Bonded Elbow Bend Junctions and End Caps	77
3-9	Schematic of High-Temperature Vise for Exerting Bonding Pressure through Thermal Expansion	78
3-10	Cross-Section of Diffusion Bonding Retort	82
3-11	Cross-Section of Electric Blanket Assembly for Diffusion Bonding of Sandwich Panels	83
3-12	Formation of Transient Liquid Phase in Diffusion Brazing and Eutectic Bonding	86
3-13	Experimental Bell-Jar Apparatus Used for Diffusion Bonding Investigations	102
4-1	Time-Pressure Relation for Diffusion Bonding	140

LIST OF TABLES

Table	Title	Page
1-1	Comparison of Experimental and Calculated Values of Activation Energy (Q)	15
2-1	Diffusion Barrier Data	28
2-2	Thermal Expansion Coefficients	47
2-3	Relative Corrodability of Metals and Alloys	51
3-1	Summary of Practical Applications of Diffusion Bonding Techniques	90
3-2	Summary of Experimental Data on Diffusion Bonding of Similar Materials	104
3-3	Summary of Experimental Data on Diffusion Bonding of Dissimilar Materials	125
4-1	Format of Diffusion Bonding Techniques	138
4-2	Summary of Bonding Combinations, Thickness and Hardness Increase of Intermetallic Zones	146

CHAPTER 1. DIFFUSION THEORY

A. INTRODUCTION

Diffusion is the process by which matter is transported from one part of a system to another by movement of atoms. In a macroscopic sense, diffusion is enhanced by the influence of a compositional gradient, resulting in the directionalization of the transport of matter. From an atomistic viewpoint, the random motion of atoms is understood to be directionalized by application of energy or an energy gradient. This may come about due to a chemical, electrical and/or thermal energy gradient in a system, causing mass transport along the gradient. The mechanisms by which atomic motion occurs are discussed in the sections of this chapter.[1,2] These considerations are basic to solid state joining of materials by diffusion.

B. MACROSCOPIC CONSIDERATION OF DIFFUSION

Diffusion may be described in a macroscopic sense by Fick's first and second laws. These laws were formulated in 1855 for an isothermal, isobaric binary system consisting of a single phase region of well-defined state in which diffusion occurs in only one direction.

Fick's first law states that the quantity of diffusing substance which passes per unit time through unit area of a plane at right angles to the direction of diffusion is known as the flux J and is proportional to the concentration gradient of the diffusing substance. Representing

the concentration or amount per unit volume as C, and taking the X direction to be the diffusion direction, Fick's first law may be written:

$$J = -D \frac{\delta C}{\delta X} \qquad \text{I.}$$

The factor D, known as the diffusivity or coefficient of diffusion, is introduced as a proportionality factor and is dependent on the atomic species.

Fick's second law, derived from the first, can be stated as follows:

$$\frac{\delta C}{\delta t} = D \frac{\delta^2 C}{\delta X^2} \qquad \text{II.}$$

where t = time. This relation recognizes that the concentration (C) varies with time (t).

Equation II holds only for the case where the diffusivity is constant, that is, concentration independent. Actually, this will happen only if the difference in concentration between two regions under consideration is small and if the original concentration of the diffusing substance is small. If these restrictions are not met, the general form of Equation II can be stated as:

$$\frac{\delta C}{\delta t} = \frac{\delta}{\delta X} \left(D \frac{\delta C}{\delta X}\right) \qquad \text{III.}$$

Used to describe solid state diffusion, these equations tell us that <u>distance</u> traveled by a diffusing substance is proportional to $\sqrt{Dt}$, where D is the diffusivity and t is time.[9]

C. ATOMISTIC CONSIDERATION OF DIFFUSION[2,3]

From an atomistic viewpoint, several mechanisms are proposed for atom movement in solids to describe the phenomenon of diffusion. Basically, diffusion in solids takes place by jumps of atoms from one lattice site to another. An energy gradient directs the jumps of atoms and results in a net migration of matter. The several ways that atomic migration can occur in crystalline solids are described below.

D. DIFFUSION MECHANISMS

The primary mechanisms of diffusion are considered to be: interstitial; vacancy; interstitialcy and crowdion; and interchange of adjoining atoms. The following discussion of these mechanisms pertains to diffusion in continuous crystal lattices which are perfect aside from vacancies. In reality, crystalline materials possess imperfections such as dislocations and small and large angle grain boundaries which markedly influence diffusion. These imperfections will be considered later.

(1) Interstitial Atom Movement:

An atom is said to diffuse by an interstitial mechanism when it passes from one interstitial site to one of its nearest neighbor interstitial sites without permanently displacing any of the matrix atoms. This is schematically shown in Figure 1-1. This mechanism is proposed for solute atoms which normally occupy interstitial positions, e.g. oxygen, nitrogen, carbon and hydrogen, and perhaps boron, helium and silicon. The carbon-iron

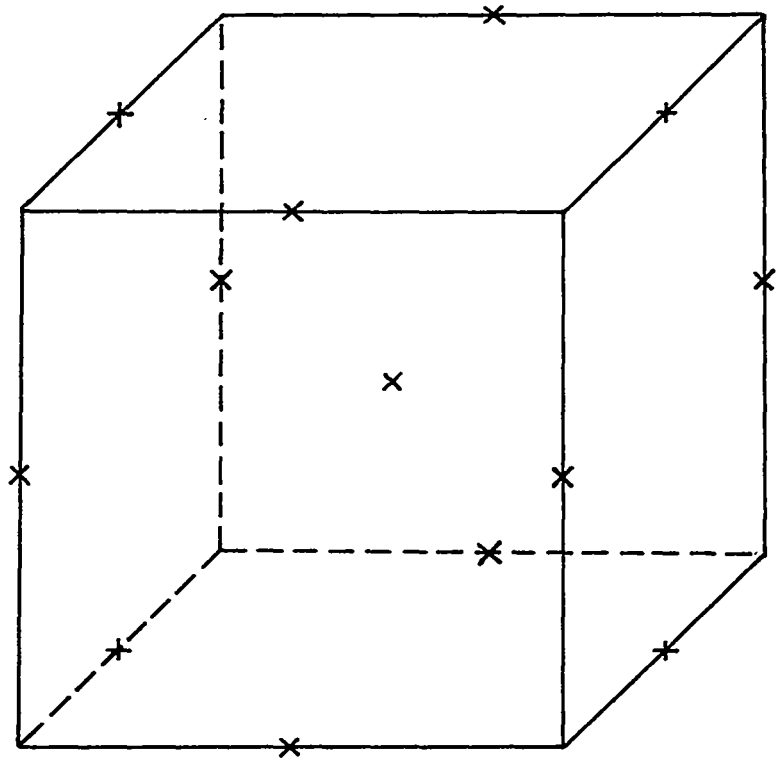

(a)

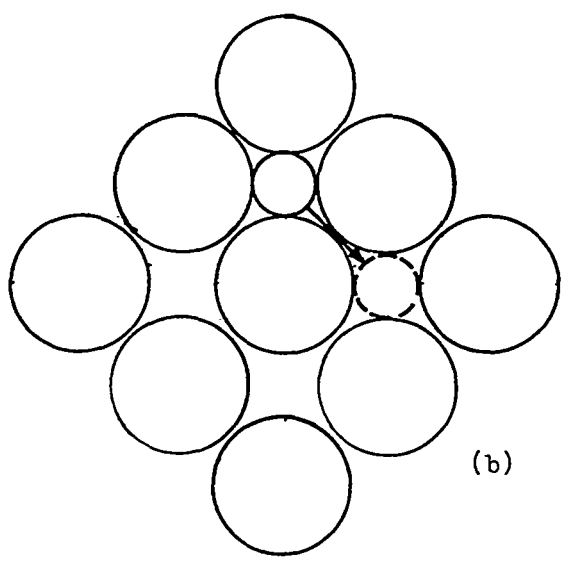

(b)

Figure 1-1. Interstitial Diffusion

(a) X indicates the interstitial sites in an FCC unit cell.

(b) (100) plane in FCC lattice showing path of interstitial diffusing by interstitial mechanism.

system has been extensively studied and carbon is found to diffuse by this mechanism.[4] This mechanism should be dominant when small lattice distortions are sufficient to allow movement of the diffusing element. However, when the size of the interstitial atom approaches the size of the atoms in the lattice, the necessary distortion of the lattice is too great and interstitial diffusion is not favored.

(2) Vacancy Mechanism:

All crystals have unoccupied lattice sites known as vacancies. If one of the atoms from an adjacent site jumps into the vacancy, the atom is said to have moved by a vacancy mechanism. Schematically, it can be described as in Figure 1-2. Although diffusion by a vacancy mechanism has been generally accepted for most metals, the migrating atom must have sufficient energy to overcome the energy barrier in order to exchange positions with a vacancy in the lattice. When occupied by a diffusing atom, the vacancy has effectively moved in a direction opposite to that of the occupying atom. In the next jump, the atom may exchange positions with another adjacent vacancy if available or with the one it has replaced. If it exchanges position with the one it has replaced, there is no net migration; while in the other case, atomic movement has taken place.

It is logical that the diffusivity should be sensitive to the vacancy concentration if this is a valid mechanism. Experimental work[5] has demonstrated a reduction in D by a factor of 1,000 when a pressure of

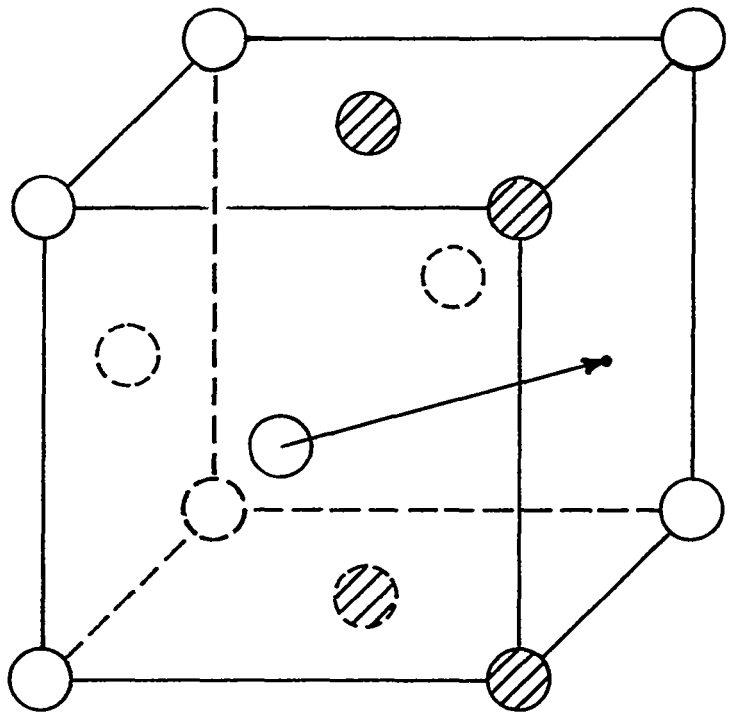

(a)

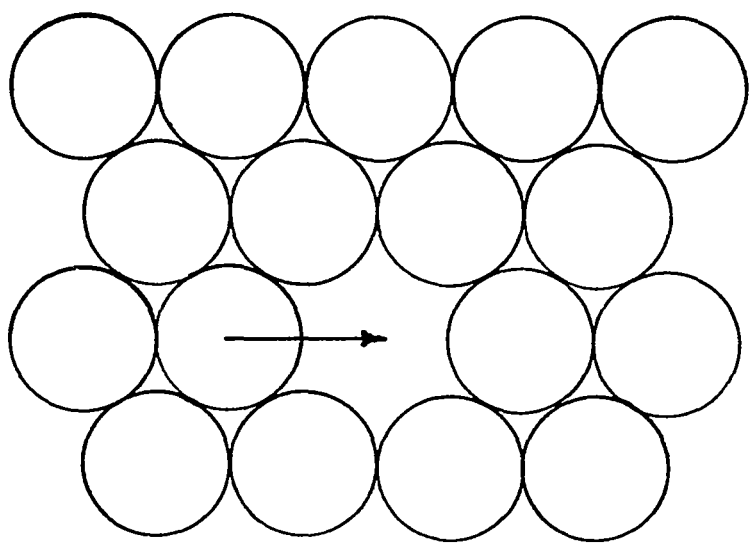

(b)

Figure 1-2. Vacancy Diffusion

(a) A unit cell showing the four atoms (shaded) which must move before the indicated jump can occur.

(b) A close packed plane of spheres.

570,000 psi is applied (vacancy concentration can be reduced by accommodation to the high pressure).

(3) Interstitialcy and Crowdion Mechanisms:[9]

These mechanisms are proposed to explain the movement of atoms, in a lattice of similar size atoms, between adjacent interstitial positions. The large interstitial atom is said to diffuse by an interstitialcy mechanism if it pushes one of its nearest-neighbor atoms into an interstitial position and occupies the lattice site previously occupied by the displaced atom (Figure 1-3b). Such a movement involves small lattice distortion and has been proven to be the dominant diffusion mechanism for silver in AgBr.[6]

Another possible mechanism, especially for face centered cubic pure metals, involves the sharing of one lattice site by two atoms (Figure 1-3a). Diffusion can then occur by the rotation of this pair into another cubic direction or by the displacement of one of the atoms so that there are two atoms on one of the nearest-neighbor sites.

The Crowdion mechanism involves the placement of an extra atom in a close-packed direction, thus displacing several atoms from their equilibrium position as shown in Figure 1-3c. The similarity to an edge dislocation is evident. The energy required for glide in the close-packed direction is small.

(4) Interchange of Atoms:

In the 1930's it was conceived that diffusion could occur by a simple exchange of two nearest-neighbor atoms as seen in Figure 1-4. However, this

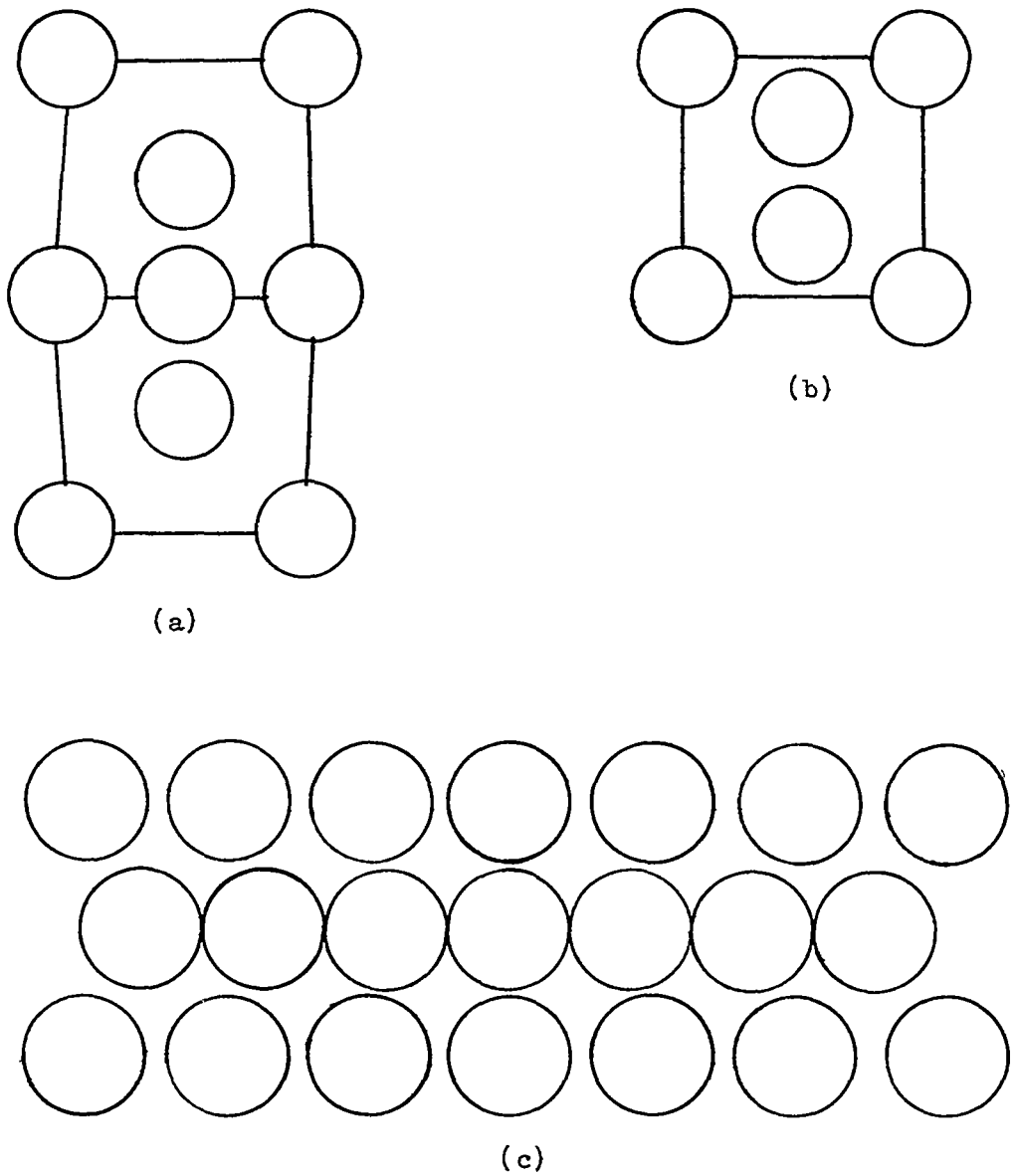

Figure 1-3. Interstitialcy and Crowdion Mechanism

(a) (100) plane of FCC atom with interstitial atom on interstitial site.

(b) (100) plane of FCC lattice with two atoms sharing one site. This is possible interstitial configuration in addition to that in part (a).

(c) (111) plane of FCC lattice showing a Crowdion (note extra atom in middle row).

(Shewmon, P. G., Diffusion in Solids, McGraw-Hill, 1963)

mechanism requires distortions comparable to an interstitial mechanism for a solvent size atom. By the late 1940's, the high energy requirements had convinced most workers that this was not a likely mechanism. However, in 1950 Zener[7] introduced the ring mechanism which describes atomic movement when three or four atoms rotate as a group (Figure 1-5). Such a mechanism requires considerably less distortion than that required for a direct interchange of two neighboring atoms. The ring mechanism is not known to operate in any metal or alloy, but has been suggested as a mechanism which would explain some apparent anomalies in the diffusivity (D) for body centered cubic metals.

Diffusion in crystalline solids is characterized by one or more of the diffusion mechanisms discussed above.

E. DIFFUSION PATHS[2,3]

In a polycrystalline solid, there are three primary paths along which diffusion may take place, viz. the crystal lattice, grain boundaries and free surfaces. The diffusion taking place along these paths is referred to, respectively, as volume, grain boundary and surface diffusion.

(1) Volume Diffusion:

Volume diffusion is the movement of atoms through the crystal lattice within the grains of the metal. Atom movement in metal grains is the controlling factor for diffusion in the solid state.

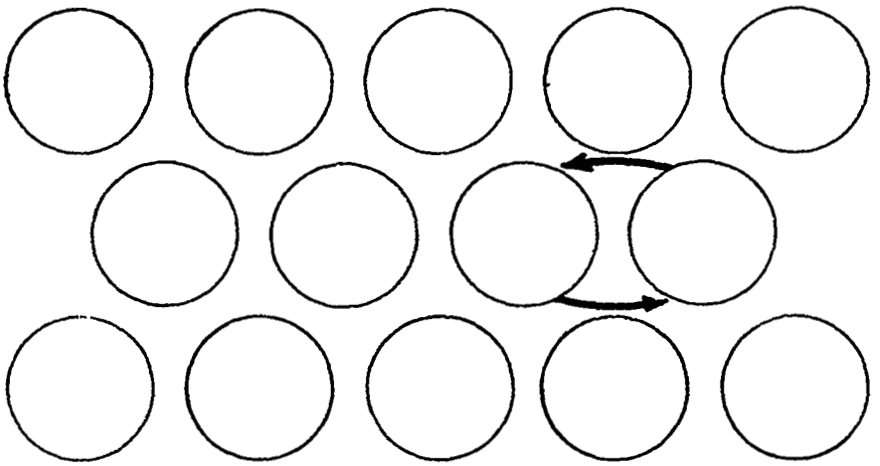

Figure 1-4. Direct Interchange of Neighboring Atoms

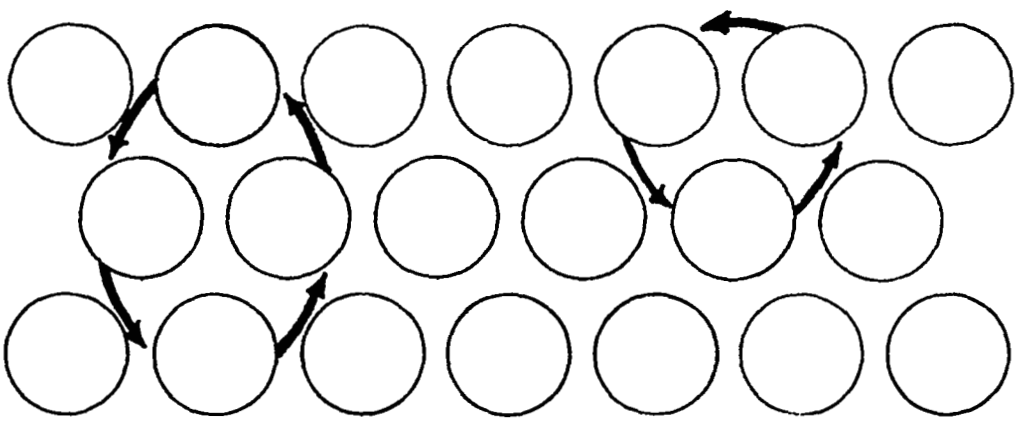

Figure 1-5. Ring Mechanism showing three or four atoms rotating as a group.

(2) Grain Boundary Diffusion:

Grain boundaries are regions of crystalline mismatch between adjacent grains in a solid. These relatively "open", high dislocation density regions provide far less resistance to atom movement than the crystal lattices. Hence, the diffusivity is higher along the grain boundaries. However, the contribution of grain boundary diffusion to the overall diffusivity of a system is generally not large because of the small volume percent of grain boundary in a solid. Fine grained materials with a higher percent grain boundary can be expected to demonstrate increased diffusivity.

(3) Surface Diffusion:

Diffusion along free surfaces or phase boundaries is categorized as surface diffusion. There is ample qualitative evidence indicating that the mobility of atoms in free surfaces is exceptionally high, viz. several orders of magnitude greater than within a solid. This observation applies both to self-diffusion and diffusion of foreign atoms at free surfaces. The surface tension or surface free energy enhances atomic mobility. For example, in the sintering of metal powders, the primary driving force is the decrease in free energy which accompanies the reduction in the vapor solid interfacial area. The coarsening of precipitate particles in age hardening alloys is a similar example involving two solid phases.

Crystal imperfections such as vacancies, small angle (i.e. 1° - 10°) boundaries, grain boundaries and dislocations enhance diffusion. The mean jump frequency of an atom in these regions of imperfection is greater,

giving rise to higher local diffusivities. These are the geometrical, rather than the energetic, factors influencing diffusion in solids.

F. DIFFUSIVITY

The diffusivity is a measure of the mass transport across a plane per unit time. Quantitatively, the diffusivity "D" in a system can be expressed by the equation:

$$D = Ae^{-(Q/RT)} \qquad \text{IV.}$$

where:

T = temperature in degrees Kelvin

R = gas constant

A = constant dependent on atomic vibration frequency, the entropy state, correlation of jumps and other factors

Q = activation energy for diffusion

Diffusivity is a property of the atomic specie and its crystallographic arrangement. With this relationship, it is possible to describe and predict diffusion behavior in both single- and multi-component systems.

G. ACTIVATION ENERGY FOR DIFFUSION (Q)

The activation energy for diffusion is an important parameter for describing diffusion in solids. It has been determined, to varying degrees of accuracy, for most elements of interest.

Since Q is a property of the atomic specie and crystallographic arrangement in a solid, prediction of activation energy values should theoretically be possible. Toth and Searcy[8] have presented a model for the prediction of the activation energy for self-diffusion. The summation of the energy to form and move a vacancy is shown to be equal to the activation energy for self-diffusion, as indicated below:

Crystal Structure	Activation Energy (Q)	
FCC (HCP)	$16.0\ T_m + .27\ L_s$	V.
	$22.6\ B_s V_o + .27\ L_s$	VI.
BCC	$14.7\ T_m + .27\ L_s$	VII.
	$23.8\ B_s V_o + .27\ L_s$	VIII.

where:

T_m = melting temperature in degrees Kelvin

L_s = heat of sublimation

B_s = bulk modulus

V_o = atomic volume

The energy to form a vacancy is represented by $.27\ L_s$. Movement of vacancies is characterized by: (1) 16 or 14.7 T_m or (2) 22.6 or 23.8 $B_s V_o$.

This treatment achieves overall good agreement with experimental data and all of the parameters can be measured. Closest agreement with

experimental activation energies is obtained using the compressibility (B_s) for BCC metals and the melting point (T_m) for FCC (HCP) metal. Table 1-1 presents a comparison of experimental activation energies with values predicted from the above relations. Close agreement is seen with the exception of zirconium.

It is noted that Q is proportional to T_m. Therefore, from Equation IV it is evident that as the melting point increases, the temperature that produces the same diffusivity (D) also increases; or in other words, the diffusivity (D) at a constant temperature decreases.

H. DIFFUSION IN BINARY SYSTEMS

The diffusivity in a binary system of metals A and B is intermediate between their self-diffusivities. Toth[9] and others have developed techniques to describe the diffusivity in alloy solid solutions. The mole fraction of A in B, or vice versa, is the governing factor. Three examples of the variance of diffusivity in solid solution binary systems are presented in Figure 1-6. The dependence of D on the melting temperature (actually the solidus temperature) is evident.

When intermediate compounds and phases of A and B exist (i.e. incomplete solid solubility), the variance of D will be more complicated. There will be an effect due to the presence of a different crystal structure and the surface energy of the interface between phases. These considerations, however, do not alter the prime dependence of diffusivity on the melting point.

TABLE 1-1[8]
COMPARISON OF EXPERIMENTAL AND CALCULATED VALUES
OF ACTIVATION ENERGY FOR DIFFUSION - Q
(all values in kcal)

Element	Experimental	Equations VI and VIII (Bulk Modulus)	Equations V and VII (Melting Temperature)
Li	13.2	14.0	17.0
Na	10.5	10.6	12.4
K	9.1	8.8	10.7
Cr	53.0	54.3	57.5
αFe	59.2	55.5	53.4
Nb	105.0	93.1	88.3
Ta	110.0	104.7	98.1
W	120.5	122.5	105.3
βTl	20.0	23.5	20.1
βZr	27.0	70.6	70.7
Mg (FCC) (HCP)	32.0	20.3	24.0
Al	32.3	37.7	35.8
γFe	64.5	54.0	55.9
βCo	62.0	55.0	55.7
Ni	66.8	56.3	54.9
Cu	48.1	44.0	43.6
Zn	22.7	20.7	19.5
Ag	44.1	42.0	38.2
Cd	18.6	20.3	16.7
In	17.9	19.6	22.3
Pt	68.0	93.3	69.1
Au	41.7	62.7	44.3
αTl	22.8	22.9	20.9
Pb	24.2	30.0	22.2
αZr	22.0	68.8	73.4

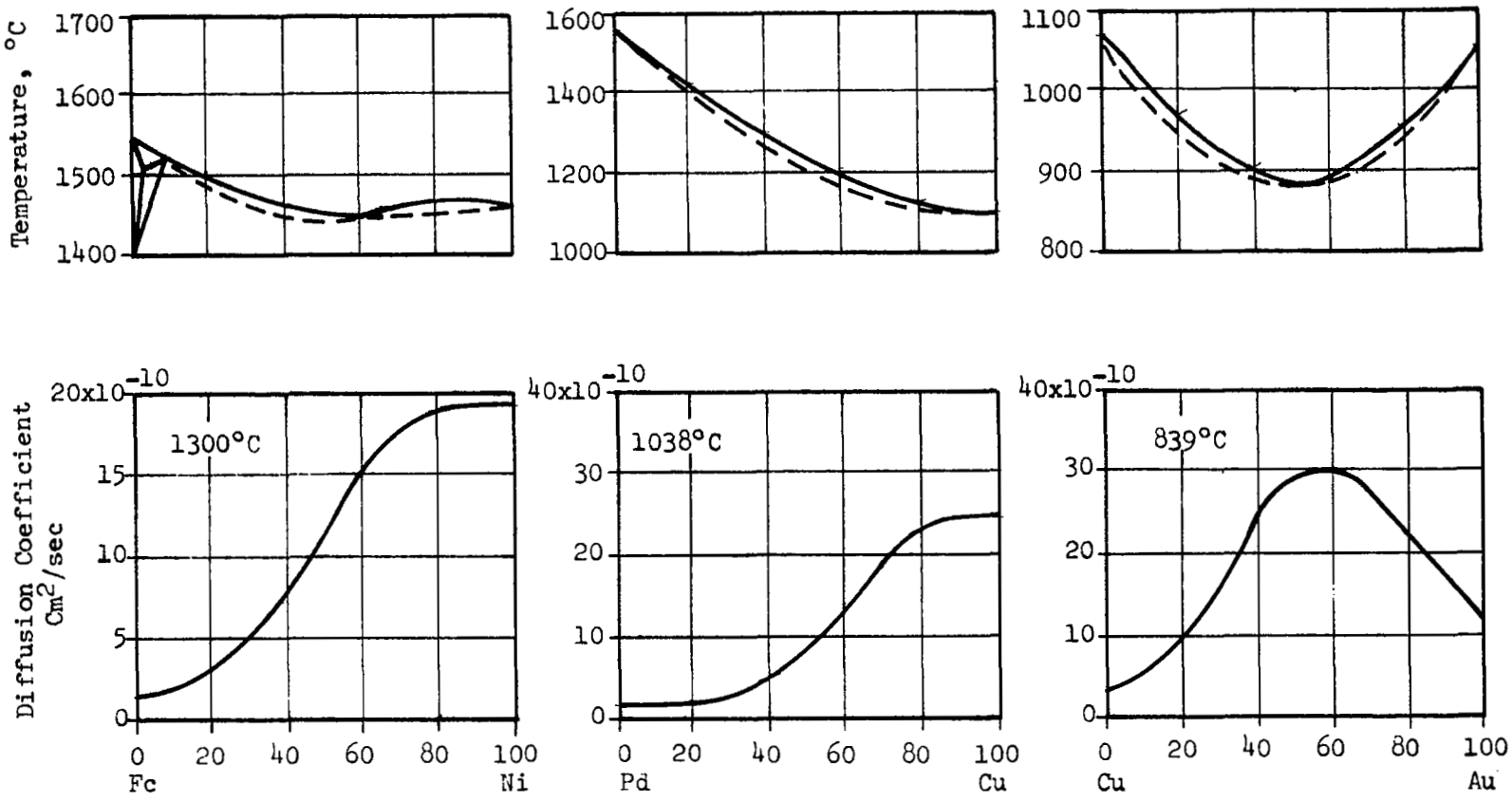

Figure 1-6. Phase Diagrams and the variation of $\overline{D}$ with composition for the isomorphous systems iron-nickel, copper-palladium and copper-gold.

(Birchenal, C. E., "Volume Diffusion - An Empirical Study," in Atom Movements, ASM Publication, 1951)

The interdiffusion of A and B is an equilibrium reaction whose completion is the lowest energy state of the binary system. The variance from the lowest energy stems from the distinct properties of A and B. The governing properties are:

- Physical
- Chemical
- Electronic
- Crystalline Structure
  - Lattice Dimensions
  - Defect Structure

Large differences in diffusivity of the components in a binary system can cause the formation of voids (Kirkendall effect). Diffusion of the element with the higher diffusivity will be faster and, thus, voids may form in this metal. This effect was first observed in the Cu-Zn system.

The above considerations are applicable to multicomponent systems also, but analytical treatment is necessarily more difficult.

I. SUMMARY

Diffusion has been defined as the process by which matter is transported from one part of a system to another by movement of atoms. It has been described in a macroscopic sense of Fick's first and second laws. From an atomistic viewpoint, movement of vacancies is considered to be the predominant mechanism for atomic motion. In addition, other possible

mechanisms that were discussed are: interstitial atom movement, interstitialcy and Crowdion mechanisms, interchange of atoms and the ring mechanism. The three primary paths along which diffusion may take place in polycrystalline solids, viz. the crystal lattice, grain boundaries and free surfaces have been considered. The relation between the diffusivity "D", the activation energy "Q" and the temperature "T" is described. Empirical studies on the determination of the activation energy for self-diffusion and for diffusion in binary systems have been reviewed. Finally, the diffusion in binary systems is examined and the variation in "D" with composition is described.

CHAPTER 2. DIFFUSION BONDING FUNDAMENTALS

A. INTRODUCTION

Diffusion bonding is a joining technique by which coalescence of clean, close-fitting parts is obtained through a combination of pressure and heat. Theoretically, when atomically clean and smooth surfaces are placed in contact, a solid bond is formed. However, in general, surfaces cannot be prepared to exhibit cleanliness and flatness on an atomic scale. To obtain a solid state bond between two parts, it is necessary to overcome the problems presented by inherent surface impurities and roughness. It is the purpose of this chapter to discuss the practical means by which solid state bonding is accomplished.

For purposes of discussion, solid state bonding can be divided into two stages: (1) development of intimate contact between metal surfaces through localized plastic flow, and (2) formation of a homogeneous bond through diffusion across the interface. Deformation of the interface is dependent upon the plastic flow properties of the metals to be joined, while the diffusion of any joining operation is controlled by the fundamental parameters which are presented in Chapter 1.

The controlling mechanisms in the diffusion bonding process are complex and interrelated. Discussed in this section are the means by which solids are brought together and subsequently diffused to make a joint. For clarity, the sections of this chapter are outlined below:

Process Parameters

The process parameters that control the bonding operation are pressure, temperature, time and atmosphere.

Diffusion Bonding Practice

Solids are joined by diffusion with and without the use of intermediate metals. The discussion of the relevant factors is presented in this section.

Practical Considerations

This section discusses the important factors to be considered for the attainment of intimate contact and diffusion of similar and dissimilar metals.

B. PROCESS PARAMETERS

Pressure

The primary purpose of pressure in diffusion bonding is to obtain intimate contact of the surfaces to be bonded. It is recognized that surface roughness on the order of 10 to 1,000 microinches will be encountered. To attain intimate contact of two solids, the pressure must be sufficient to cause plastic deformation of the surface irregularities in order to fill void areas.[10] If the pressure is not sufficient, there will be voids at the interface and the contact area will be less than 100 percent.

Temperature

Heat is applied to facilitate the achievement of intimate contact and the migration of atoms across the interface. The yield strength of a metal drops as the temperature increases and, therefore, the necessary plastic deformation in the interface region can be attained through temperature control.

The migration of atoms across the interface has an exponential dependence on temperature ($D = Ae^{-Q/RT}$). Therefore, other things being equal, high bonding temperatures relative to the melting point should be used. Practically, however, the actual bonding temperature is limited by the following factors:

1. The solidus temperature and the lowest melting constituent in the system must not be exceeded unless transient liquid phase bonding is intended.

2. The recrystallization temperature must not be exceeded if the recrystallization and grain growth of the metal are unacceptable. This comment refers to the components being joined and not local interface recrystallization.

3. When retention of wrought or heat treated properties is desired, the annealing temperature must not be exceeded.

4. At high temperatures (2,000 - 3,000° F), the tendency to bond to fixtures is greater.

5. High temperatures incur higher process costs.

The diffusion bonding temperature is affected by some or all of these factors depending upon the material and surface requirements.

Time

The time must be sufficient to assure: (1) intimate contact, and (2) adequate diffusion across the interface.

The time needed to attain intimate contact is dependent upon the relationship of the bonding stress to the yield stress at the bonding temperature. The bonding stress is defined as the load per unit area of joint.

When the bonding stress exceeds the yield stress, the components being joined deform plastically and intimate contact is accomplished in seconds or minutes.

On the other hand, bonding stresses lower than the yield stress require creep and diffusion to attain 100 per cent contact area and, therefore, longer times of the order of hours may be necessary.

The diffusion time is strongly dependent upon temperature with higher temperatures favoring shorter times. A controlling factor will be the impurity level of the interface region. Again, the times can range from minutes to hours.

Atmosphere

Severe oxidation results at the high bonding temperatures normally employed and, therefore, diffusion bonding is usually done in a vacuum or an atmosphere of inert or noncontaminating gas.

Interface diffusion and the mechanical properties of the metals joined are adversely affected by oxygen, nitrogen and hydrogen contamination. If the time, temperature and pressure can be adjusted to eliminate or reduce this contamination to an acceptable level, bonding in air is permissible.

C. DIFFUSION BONDING PRACTICE

There are two general methods of joining metals by diffusion bonding. They are base-metal to base-metal and use of an intermediate material between the base metals. Each of these methods is described in this section.

Base-Metal to Base-Metal System

This is the joint system used in diffusion bonding process such as forge welding and pressure welding. The two clean metal surfaces are brought into contact for the required period of time at elevated temperatures. In the absence of lower strength intermediate metals, generally higher pressures are required to achieve localized plastic flow on the interface. Subsequent diffusion in the joint is controlled by the temperature and the diffusivity of the metals being bonded.

Advantages

The considerations that make base-metal to base-metal joining attractive are listed below:

1. The properties of the joint should be the same as the base metal since no foreign elements have been introduced.

2. By not using an intermediate metal, a process step is eliminated.

3. In high strength-to-weight ratio structures (e.g. honeycomb sandwich panels), there can be a weight saving because no intermediate metal is used.

This joint system is used to join components with minimal loss in the mechanical and physical properties. Dissimilar material components can be joined by this technique when they are metallurgically compatible. This is true when no phases or intermetallic compounds that are unacceptable in service (i.e. detrimental to corrosion resistance, mechanical properties, etc.) are formed. Examples of dissimilar metal combinations are presented in a later section.

Requirements

The requirements of base-metal to base-metal joining are listed below:

1. Surface contamination must be low enough so that the mechanical properties of the resulting joint are not impaired.

2. The roughness and fitup of mating surfaces must be controlled so as to achieve intimate contact with minimal component deformation.

Intermediate Metal System

Diffusion bonding aided by an added metallic material in the joint area is used advantageously. The system is characterized by bonding at lower pressures and temperatures than base-metal to base-metal joining as a result of the generally higher diffusivity and lower yield strength of the intermediate metals.

Advantages

The advantages gained through the use of intermediate metals are:

1. Intimate contact can be attained at lower temperatures and pressures.

2. Presence of an intermediate in the joint provides a concentration gradient across the interface, thereby enhancing diffusion.

3. Diffusivity is increased by the use of intermediates which: (1) have a lower melting point, or (2) form a low melting eutectic or depressed solidus temperature when combined with the base metal.

4. An intermediate material with a high solubility for oxygen, nitrogen and carbon can perform a cleaning function on the base

metal and the achievement of a bond is thus facilitated by interface cleaning "in situ". For example, silver may be used to deplete the oxide on titanium and aluminum surfaces.

5. Joining of metallurgically incompatible dissimilar metals is possible through a diffusion barrier. The purpose of the barrier is to prevent the formation of mechanically unacceptable microconstituents by interdiffusion of the materials to be joined.

Diffusion theory and experimental work[15] suggest that the principle factor controlling interdiffusion is the lowest barrier base metal solidus temperature. Figure 2-1 illustrates this point. Chromium is used as a diffusion barrier between molybdenum and nickel. The solidus temperature for Ni-Cr and Ni-Mo, respectively, is 2450° F and 3380° F. Therefore, with the three metals at the same temperature, the diffusivity of the Cr-Mo interface is many orders of magnitude less than the Ni-Cr interface. Thus, the Cr-Mo interface acts as a barrier between the Ni and Mo.[16] Additional data on diffusion barriers is presented in Table 2-1.

6. The lower bonding temperatures decrease the chance of microstructural changes in the base metal (i.e. recrystallization, annealing, etc.).

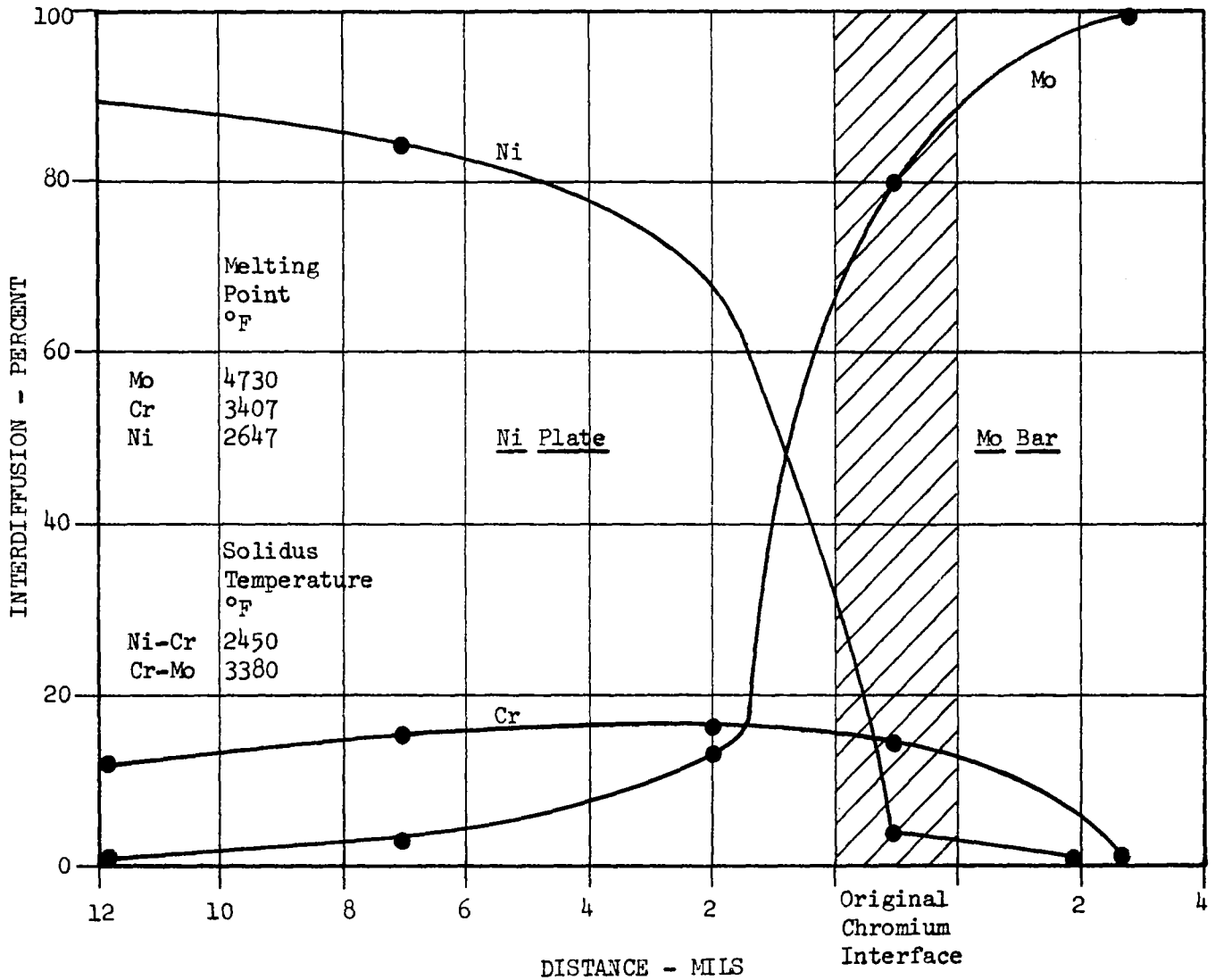

Figure 2-1. Interdiffusion of Components of a Molybdenum Bar Plated with Nickel and Chromium after 600 hours at 1100° C. (DMIC No. 162, p. 35)

TABLE 2-1. DIFFUSION BARRIER DATA

Base Metal(s)	Melting Point (F)	Barrier	Melting Point or Lowest Solidus Temp (F)	Interdiffusion Temp (F)	Interdiffusion Time (Hrs)	Diffusion Zone: Micro-Inches	Remarks	Source No.
W	6170	Ir	4450	3090	1	1600-2000	Intermediate phases	12
W	6170	Hf	4030	3090	1	1000	Intermediate phases	12
W	6170	Rh	3570	3090	1	2400-3600	Intermediate phases	12
W	6170	V	3452	3090	1	2400	No intermediate phases	12
W	6170	Zr	3020	3090	1	4800	Intermediate phases	12
W	6170	Pt	3220	3090	1	4400-8000	Intermediate phases	12
Ta	5425	Ir	4450	3090	1	1600-2400	Intermediate phases	12
Ta	5425	Rh	3570	3090	1	2000-5200	Intermediate phases	12
Ta	5425	Cr	3092	3090	1	14,400	Intermediate phases	12
Ta	5425	Zr	3362	3090	1	800	No intermediate phases	12
Ta	5425	Pt	3220	3090	1	1600-4000	Intermediate phases	12
Mo	4730	Ir	4450	3090	1	2200	Intermediate phases	12
Mo	4730	Hf	3362	3090	1	2000	Intermediate phases	12
Mo	4730	Rh	3524	3090	1	4800	No intermediate phases	12
Mo	4730	Cr	3380	3090	1	7200	No intermediate phases	12
Mo	4730	Fe	2642	1830	72	--	Brittle intermetallics	13
Mo	4730	Ni	2400	1830	48	356	Good bonds, best barrier with SS-Mo	13
Mo	4730	Ti	3128	1830	72	2069	Unbonded	13
Mo	4730	Cu	1980	1830	48	159	Weak resistance to thermal shocking	13

TABLE 2-1. DIFFUSION BARRIER DATA (Continued)

Base Metal(s)	Melting Point (F)	Barrier	Melting Point or Lowest Solidus Temp (F)	Interdiffusion Temp (F)	Interdiffusion Time (Hrs)	Diffusion Zone: Micro-Inches	Remarks	Source No.
Mo	4730	Monel	2300	1830	72	649	Brittle intermetallics	13
Mo	4730	Pd	2810	1830	72	2502	Bond broken on thermal shocking	13
310 SS	2550	Fe	2550	1830	72	2670	Best barrier with SS-Cb	13
310 SS	2550	Ni	2600	1830	72	3892	Best barrier with SS-Mo	13
310 SS	2550	Ti	1985	1830	48	6853	Brittle intermetallics	13
310 SS	2550	Cu	1980	1830	72	606	Bond broke with thermal shock	13
310 SS	2550	Monel	2300	1830	72	4888	Excessive diffusion	13
310 SS	2550	Pd	2390	1830	72	1469	Brittle intermetallics	13
310 SS	2550	Ta	2370	1830	48	648	Poor mechanical bond	13
Cb	4380	Fe	2480	1830	72	1131	Best barrier for Cb-SS	13
Cb	4380	Ni	2147	1830	72	2230	Brittle intermetallics	13
Cb	4380	Ti	3128	1830	24	2268	No bonding	13
Cb	4380	Cu	1980	1830	72	10	Bond broke with thermal shock	13
Cb	4380	Monel	2300	1830	72	--	No bonding	13
Cb	4380	Pd	2810	1830	72	1301	Brittle intermetallics	13
Ni-Mo	--	Cr	[Cr-Mo (3380) [Cr-Ni (2450)				Good diffusion barrier	11

TABLE 2-1. DIFFUSION BARRIER DATA (Continued)

Base Metal(s)	Melting Point (F)	Barrier	Melting Point or Lowest Solidus Temp (F)	Interdiffusion Temp (F)	Interdiffusion Time (Hrs)	Diffusion Zone: Micro-Inches	Remarks	Source No.
Al-U-10Mo	--	Cb	--	--	--	--	Good diffusion barrier.	14
Mo-.5Ti-Rene'41	--	Cr	Cr-Mo (3380)	1800	4	--	Effective diffusion barrier.	76
Mo-.5Ti-Haynes 25	--	Cr	Cr-Mo (3380)	1800	4	--	Questionable barrier. Joint fracture at Cr/Haynes 25 interface.	76
Be-316 Stainless	--	Cu	Be-Cu (2750)	1500	4	--	Ineffective barrier.	76

Requirements

To achieve the advantages that intermediate metals offer to diffusion bonding, careful selection is required. These requirements are described below.

1. The alloy formed by interdiffusion of the base and intermediate metal must have usable engineering properties (i.e. strength, ductility, corrosion resistance, thermal stability, etc.). Therefore, some solid solubility is required and brittle intermetallic compounds or phases must be minimized or eliminated. Complete solid solubility is the most desirable relationship. Combinations with solubility as low as several percent can be used if extended time diffusion treatments are acceptable.

2. Combinations having low remelt temperatures must be eliminated from the interface by diffusion treatments. It should be noted that "low" is relative to joint service temperature.

3. Voids must not form as a result of interdiffusion. When the diffusivity (i.e. melting point) of two metals differs greatly, it is possible for the metal with the higher diffusivity to diffuse into the other metal faster than the reverse can happen, thus voids can form in the lower melting metal.[15,17] This phenomenon is called the Kirkendall Effect. Current understanding

does not allow reliable predictions of the dissimilar metal combinations which will not develop voids by this mechanism.

4. The intermediate material must be currently or potentially available in a usable form and be applied by standard techniques (i.e. foil, powder, plated, metal sprayed or fiber deposited layer, etc.).

5. The general requirements of a diffusion barrier are described here. Performance of B as a diffusion barrier between A and C requires that:

(a) Mechanically satisfactory A-B and B-C bonds can be made.

(b) Sufficient B is present so that A and C cannot interdiffuse during bonding or in service.

(c) Presence of B in the joint is acceptable.

D. PRACTICAL CONSIDERATIONS

It is appropriate now to discuss the practical factors relevant to diffusion bonding. These considerations naturally evolve in application of diffusion theory to solid state joining. The diffusion bonding process is divided into two basic stages for purposes of discussion: (1) development of intimate contact between metal surfaces through localized plastic flow, and (2) formation of a homogeneous bond through diffusion across the interface. The practical

considerations involved in carrying out these stages will be discussed individually.

This section is completed with a discussion of dissimilar metal bonding and release materials.

Achievement of Intimate Contact

Two surfaces are in intimate contact when the proximity of the surfaces is such that the interatomic forces act across the interface. In effect, the grains of the two pieces of metal are brought together so that the interface is no more than a normal grain boundary. The areas over which such contact is established between atomically clean surfaces will exhibit the mechanical properties of the joined metals. Evidence of this adhesion is seen in metals that come in contact with each other when in ultra-high vacuum.[18]

Intimate contact in diffusion bonding with a transient liquid interface is readily accomplished when there is sufficient intermediate metal to fill the voids associated with surface roughness. Establishment of this contact over the entire interface in solid state bonding requires plastic deformation to eliminate the surface roughness voids.

Problems

The specific problems involved in achieving surface contact and forming strong bonds are discussed here.

1. Surface Impurities

The surface of a metal generally consists of one or more oxide layers of varying thickness. In addition, the presence of surface impurities such as adsorbed gas layers and contamination of the surface metal with carbon, nitrogen, oxygen and hydrogen are obstacles to the formation of intimate metal-to-metal contact and strong bonds.[18,19] These surface impurities can increase the required bonding pressure necessary to produce plastic flow at the interface.[18]

2. Surface Roughness

In practice, it is found that even the smoothest surfaces produced by available techniques have irregularities in the form of asperities and depressions in the order of 1000A (4 microinches). Because of this, the contact at the interface is localized and voids are present. Generally the area of contact is larger and the void volume smaller when the surfaces are smoother as seen in Figure 2-2.

This simple description is qualified by some recent work.[10] Comparison of the diffusion bonding of copper between a 250 to an 8 microinch surface and a 125 to an 8 microinch surface showed a larger contact area for the 250 to 8 microinch combination. The rougher surface (250 microinch) will have fewer contact points and thereby higher local bonding stresses if the same overall bonding stress is used in

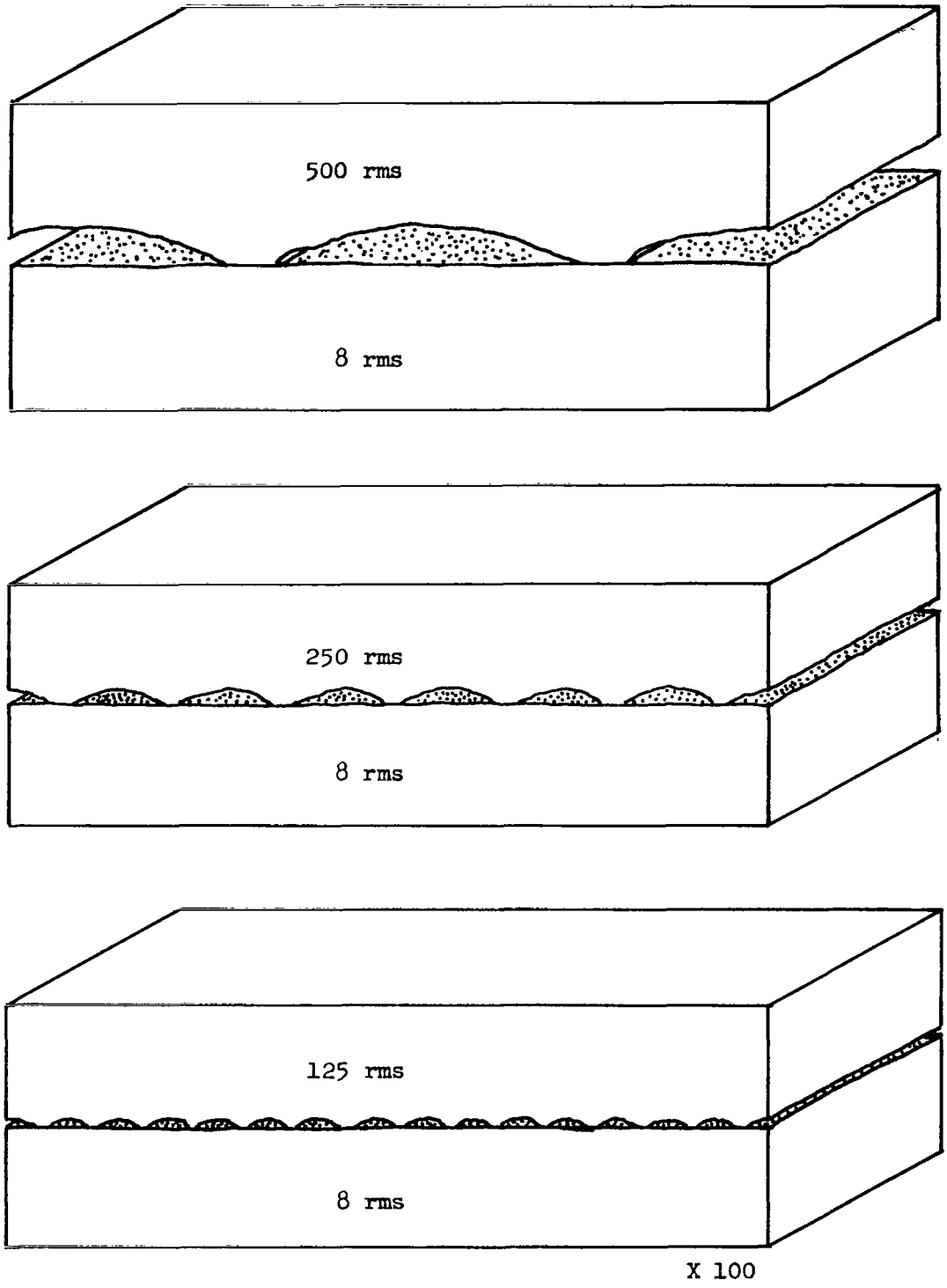

Figure 2-2. Sketch showing contact between surfaces of varying rms roughnesses. The dotted region represents the void volume. (BMI No. 1512, p.33)

each case. Possibly the higher local interface stresses cause more severe plastic deformation achieving a greater contact area.

We see then that the smoothest surface is not necessarily the most desirable surface for diffusion bonding. It is expected that the optimum surface roughness will depend on the deformation properties of the materials being bonded.[10]

Methods of Achieving Intimate Contact

In practice, there are a number of methods that are used to promote intimate contact of surfaces to be bonded. A discussion of these is presented below.

1. Chemical and Electrolytic Cleaning

Chemical and electrolytic cleaning are used to remove the contaminated surface layers, thereby reducing the impediments to plastic flow at the surface and minimizing the nucleation sites for vacancies and voids. This type of cleaning also results in a generally desirable decrease in surface roughness.

2. Mechanical Surface Treatments - Surface Abrading, Etc.

Mechanical surface treatments may be used in addition to or instead of chemical treatments to remove the contaminated surface layers. Abrasion strips off the contaminated surface layers and presents clean surface for metal-to-metal contact.[19]

3. Plastic Deformation

As mentioned before, plastic deformation of the interface region during bonding produces intimate contact.

The voids associated with surface roughness have to be eliminated to provide diffusion paths across the interface. Consider the case of a surface with a finish of 500 microinches being bonded to a surface with a finish of 8 microinches. Figure 2-3 shows the increase in area of contact with increase in bonding pressure for copper.[10] The dark areas have been plastically deformed.

As seen in the illustration, complete contact can be achieved with the elimination of the voids. The bonding pressure required to produce sufficient flow to achieve intimate contact depends on the surface roughness and bonding temperature. Mutual plastic deformation of the mating surfaces serves to break through surface films and promote contact.

4. Use of Low Yield Strength Intermediate Materials

Low yield stress intermediate materials allow intimate contact at reduced bonding temperature and pressure. Thus, a surface roughness that is undesirable in terms of (3) above can be acceptable by providing an intermediate material more amenable to plastic deformation.

5. Transient Liquid Phase

The use of a transient liquid phase which can subsequently be diffused away is a means of attaining intimate contact of two metal surfaces at

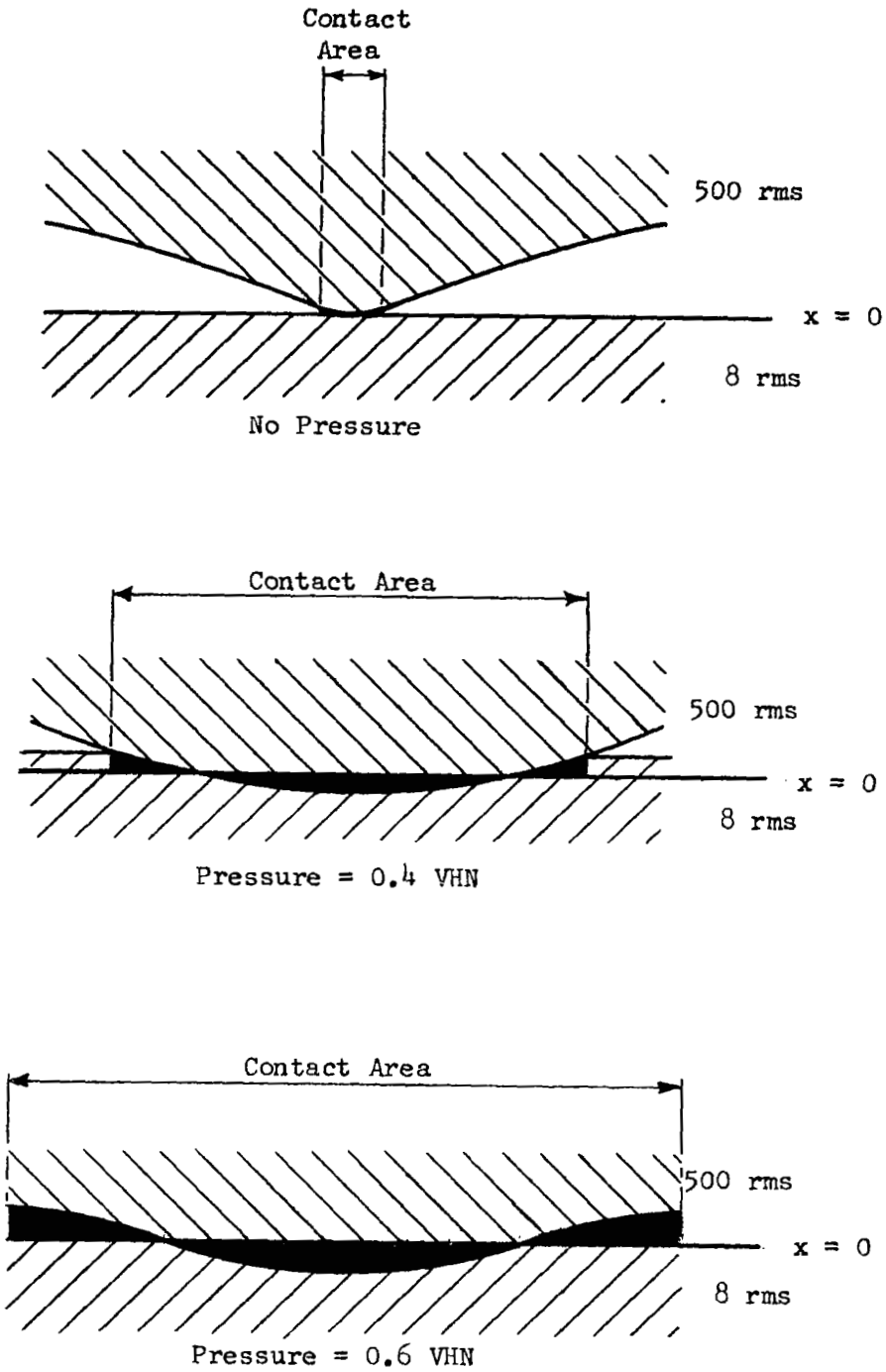

Figure 2-3. Sketch Representation of Deformation Process (BMI No. 1512)

low pressures (i.e. 1 - 10 psi). The liquid phase allows the large surface movement that is normally accomplished with high bonding pressures. It is noted that there must be sufficient intermediate metal to fill the voids from the surface roughness. Qualitatively, one would expect that the intermediate thickness must exceed the average roughness of the surfaces being joined.

Diffusion Across the Bond Interface

The goal is a bond which allows the fabricated part to behave like a solid homogeneous body having the properties of the joined metals. The degree of mass transport required is governed by the nature of the bond after the first stage, i.e. the extent of intimate contact achieved, presence of foreign elements at the interface, and the service requirements of the fabricated part. The larger the area of true intimate contact, the easier it is to achieve the desired diffusion across the interface. When low melting intermediates are used, the service requirements may or may not require complete diffusion of the intermediate material away from the joint.

Problems

It is logical to proceed by discussing the factors that inhibit diffusion across the bond interface. The obstacles to atom movement are presented first and the following section covers the factors influencing the interface diffusion.

1. Interface Voids

When the plastic flow at the interface during the first stage of bonding is insufficient to achieve complete conformance of the mating surfaces, there are voids. No diffusion will take place through these voids. Furthermore, they will tend to combine and grow in an attempt to reach a minimum surface energy condition. These voids can produce a pinning effect on the interface and retard local recrystallization, as seen in Figure 2-4.

2. Interface Impurities

Surface impurities in the bond interface act as diffusion barriers and, therefore, must be minimized. In addition, they are undesirable from a mechanical point of view. These impurities are present in the form of metal oxides, adsorbed gases, organic materials and dissolved interstials. Movement of the interface can be retarded when impurities act as sites for vacancy formation, thereby pinning the interface.

3. Void Formation

When one element diffuses into another faster than the reverse happens, it is possible for voids to develop in the first element. This phenomena is called the Kirkendall Effect and is observed with elements of greatly differing diffusivities (i.e. copper and zinc).[3]

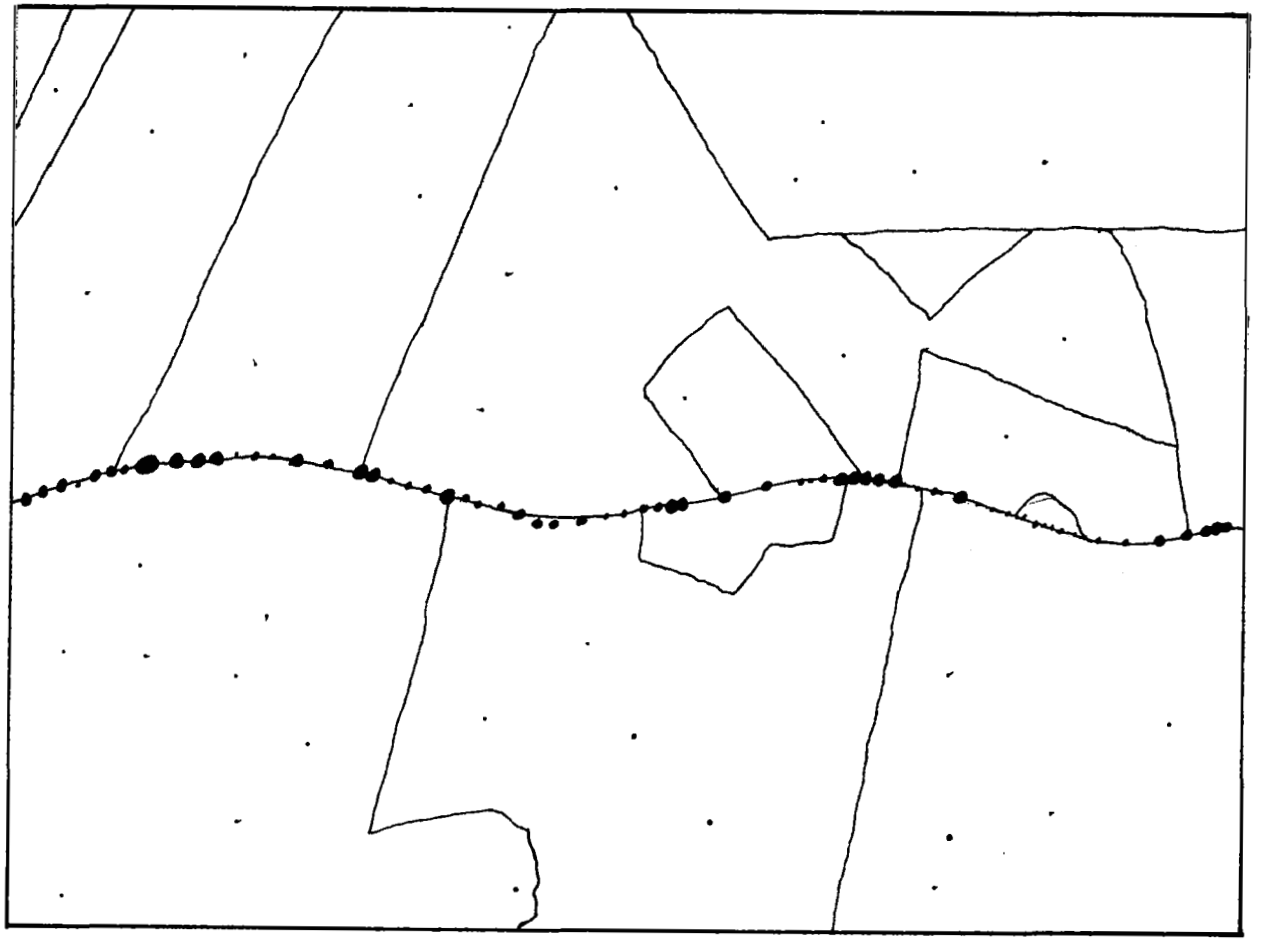

Figure 2-4. Sketch of a 100X photomicrograph showing interfacial voids. Copper specimen bonded at 1125° F for 1.5 hours at a pressure of 24,000 psi. Sketch shows specimen annealed 4 hours at 1900° F etched with 30 Lactic - $9HNO_3$. (BMI No. 1512, p. 50)

The void formation occurs in the element having the lower melting point and higher diffusivity (Figure 2-5).

It is not always possible to predict what combinations of elements will produce this phenomena. When metals having large differences in melting point are allowed to interdiffuse, void formation by the Kirkendall mechanism must be considered.

Methods of Controlling Diffusion

Diffusion treatments are conducted at elevated temperatures for times varying from minutes to hours. The grains at the interface undergo recrystallization and growth with eventual elimination of the interface. The means by which the bond interface is modified are discussed under the separate headings below.

1. High Temperature Diffusion

The principle requirement for the gross macro diffusion is a high temperature. The following will illustrate the effect of increasing temperature. Take a metal with an activation energy of 50,000 cal/mole at a temperature of 1300° F. Using the equation, $D = Ae^{-Q/RT}$, it is shown that a 180° F temperature rise will increase the diffusivity, D, by a factor of 10. Then, applying $d = \sqrt{4Dt}$, where d = distance an atom travels,

D = diffusivity and

t = time,

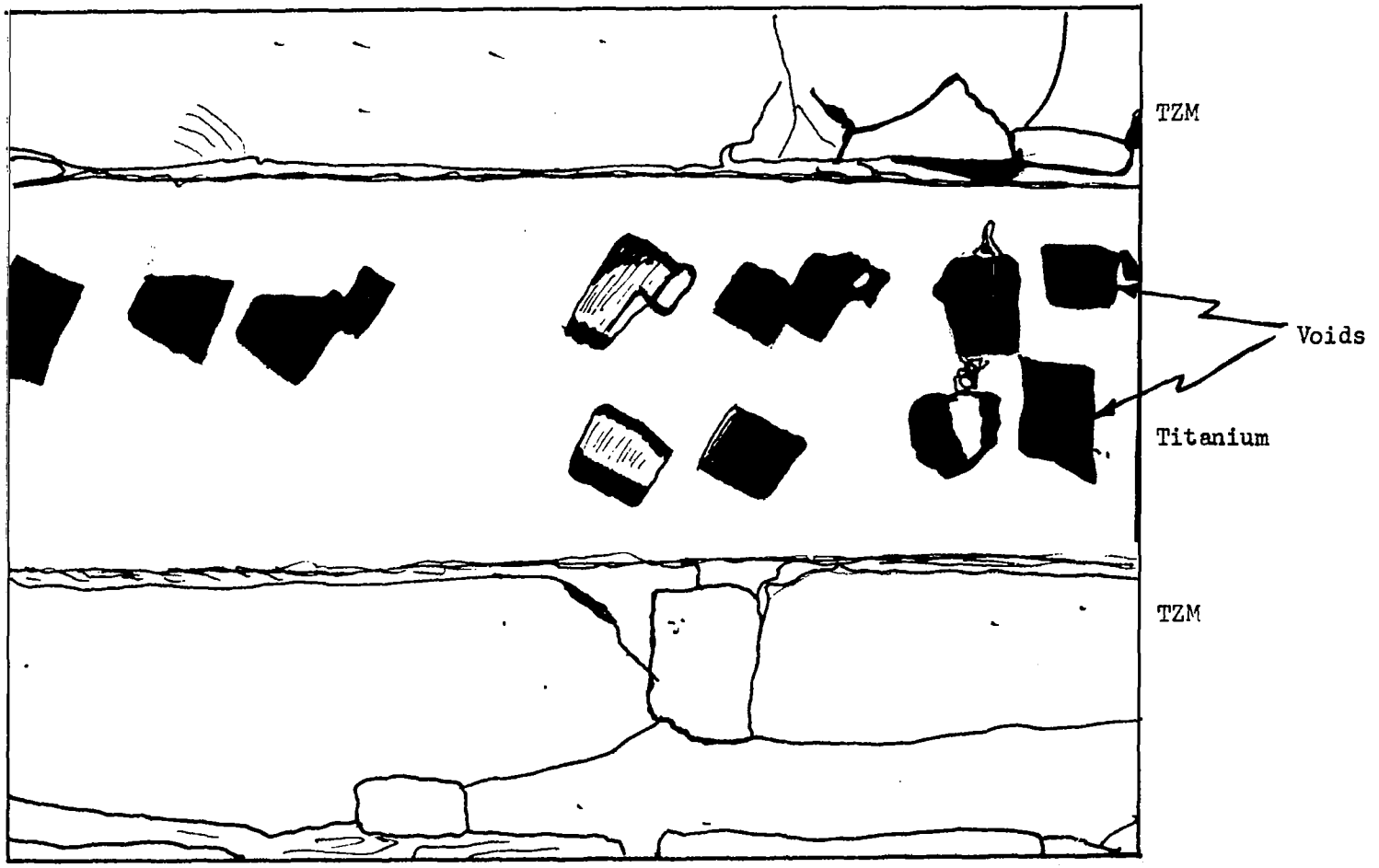

Figure 2-5. Void Formation due to Kirkendall Effect. Sketch of photomicrograph showing TZM alloy bonded with titanium intermediate. Etched for titanium. (Reference "Basic Metallurgy of Diffusion Bonding", Interim Technical Documentary Progress Report 1, August 24, 1964, prepared by Solar.)

it is seen that increasing D by a factor of 10 will triple the distance an atom can travel in a given time.

2. Intermediate Metal

The intermediate metal is used for two reasons: (1) to enhance the diffusivity, and (2) to make intimate contact more readily attainable. Generally an intermediate metal will have a lower melting point and, therefore, lower yield strength at the bonding temperatures used for the base metal. These characteristics enhance both the diffusivity and the achievement of intimate contact.

3. Transient Liquid Phase[1]

In eutectic bonding and diffusion brazing, a transient liquid phase is utilized because it: (1) increases diffusivity, and (2) makes intimate contact readily attainable. The term "transient liquid phase" signifies a phase that can be eliminated through diffusion.

The bonding temperature will be in excess of the eutectic temperature for the two metals concerned or above the melting point of the brazing filler. It is recognized that the amount of the intermediate metal must exceed the void volume due to surface roughness. By diffusing the low melting constituents or compositions from the joint region, the remelt temperature can be raised above the bonding temperature.

4. Surface Deformation

It is recognized that deformation of the surface prior to joining will produce strains and a high dislocation density. Upon subsequent heating, this surface will tend to recrystallize at a lower temperature than the remainder of the material. Thus, the atomic mobility has been enhanced at the surface. This effect has been observed to have an advantageous effect on the diffusion bonding. This surface deformation can be brought about by abrasion, shot peening,[20] grit blasting and similar techniques.

5. Surface Cleaning

The surfaces to be joined are cleaned by abrasive, chemical and/or electrical methods depending on the materials. The removal of the surface oxides and other contaminating particles and films is required to eliminate the diffusion barriers in the joint region. In addition, the mechanical properties of a joint are adversely affected by the presence of oxides and other contaminating particles.[21]

Dissimilar Metal Bonding

Solid state joining is often the best and perhaps the only method for joining dissimilar metals. The physical and mechanical properties, notably thermal expansion, ductility, strength and modulus of elasticity, will vary and merit careful consideration for each dissimilar metal combination.

Thermal Stresses

The different thermal expansions of metals joined together result in non-uniform mechanical response to temperature change. Thermal stresses of sufficient magnitude to fracture a joint can develop during cool down from the bonding temperature or during service.

An estimation of the thermal stresses that the bond and the component can experience during joining and in service is necessary. The values of these stresses depend upon the component dimensions, properties mentioned above and the magnitude of the temperature change. Table 2-2 presents a list of thermal expansion coefficients. The coefficient of thermal expansion is the major factor to consider, with larger differences producing high thermal stresses.

The direct approach to this problem is to design the joint in such a manner that the thermal stresses are acceptable. A proposed solution is to use an intermediate metal with a coefficient of expansion intermediate between that of the two dissimilar base metals.[22] Another possible solution is the use of a transitional material between the two dissimilar metals.[23] The transitional material is composed of powders of the two base metals. The composition varies so that the expansion coefficient gap between the dissimilar metals is bridged.

Galvanic Corrosion

The principle of galvanic corrosion states that, "When two unlike metals are connected in good contact and exposed to a solution capable

TABLE 2-2. THERMAL EXPANSION COEFFICIENTS[22]

Material	Coefficient of Thermal Expansion[a] 10^{-6} in/in/°F High	Low
Zinc and its alloys[c]	19.3	10.8
Lead and its alloys[c]	16.3	14.4
Magnesium alloys[b]	16.0	14.0
Tin-lead-antimony alloys[c]	14.6	10.9
Aluminum and its alloys[c]	13.7	11.7
Tin and its alloys[c]	13.0	--
Uranium[c]	12.1	--
Tin and aluminum brasses[c]	11.8	10.3
Plain and leaded brasses[c]	11.6	10.0
Silver[c]	10.9	--
Cr-Ni-Fe Superalloys[d]	10.5	9.2
Heat resistant alloys (cast)[d]	10.5	6.4
Nodular or ductile irons (cast)[c]	10.4	6.6
Stainless steels (cast)[d]	10.4	6.4
Tin bronzes (cast)[c]	10.3	10.0
Austenitic stainless steels[c]	10.2	9.0
Phosphor bronzes[c]	10.2	9.6
Silicon bronzes[c]	10.0	9.8
Coppers[c]	9.8	--
Nickel-base superalloys[d]	9.8	7.7
Aluminum bronzes (cast)[c]	9.5	9.0
Cobalt-base superalloys[d]	9.4	6.8
Beryllium copper[c]	9.3	--
Cupro-nickels and nickel silvers[c]	9.3	9.0

[a] Values represent high and low sides of a range of typical values. Metals and alloys are listed in order of descending values in "high" column.

[b] Value at room temperature only.

[c] Value for a temperature range between room temperature and 212-750°F.

[d] Value for a temperature range between room temperature and 1000-1800°F.

TABLE 2-2. THERMAL EXPANSION COEFFICIENTS[22]
(Continued)

Material	Coefficient of Thermal Expansion[a] 10^{-6} in/in/°F High	Low
Nickel and its alloys[d]	9.2	6.8
Cr-Ni-Co-Fe superalloys[d]	9.1	8.0
Low alloy steels[d]	8.6	6.3
Carbon free-cutting steels[d]	8.4	8.1
Low alloy steels (cast)[d]	8.3	8.0
Age hardenable stainless steels[c]	8.2	5.5
Gold[c]	7.9	-
High temperature steels[d]	7.9	6.3
Ultra high strength steels[d]	7.61	5.68
Malleable irons[c]	7.5	5.9
Wrought irons[c]	7.4	-
Titanium and its alloys[d]	7.1	4.9
Cobalt[d]	6.8	-
Martensitic stainless steels[c]	6.5	5.5
Nitriding steels[d]	6.5	-
Palladium[c]	6.5	-
Beryllium[b]	6.4	-
Thorium[b]	6.2	-
Ferritic stainless steels[c]	6.0	5.8
Gray irons (cast)[c]	6.0	-
Low-expansion nickel alloys[c]	5.5	1.5
Ruthenium[b]	5.1	-
Platinum[c]	4.9	-
Vanadium[b]	4.8	-

[a] Values represent high and low sides of a range of typical values. Metals and alloys are listed in order of descending values in "high" column.

[b] Value at room temperature only.

[c] Value for a temperature range between room temperature and 212-750°F.

[d] Value for a temperature range between room temperature and 1000-1800°F.

TABLE 2-2. THERMAL EXPANSION COEFFICIENTS[22]
(Continued)

Material	Coefficient of Thermal Expansion[a] 10^{-6} in/in/°F	
	High	Low
Rhodium[b]	4.6	-
Columbium[d]	3.82	-
Iridium[b]	3.8	-
Osmium and tantalum[b]	3.6	-
Zirconium and its alloys[b]	3.6	3.1
Hafnium[b]	3.4	-
Molybdenum[b]	3.0	-
Tungsten[b]	2.2	-

[a] Values represent high and low sides of a range of typical values. Metals and alloys are listed in order of descending values in "high" column.

[b] Value at room temperature only.

[c] Value for a temperature range between room temperature and 212-750°F.

[d] Value for a temperature range between room temperature and 1000-1800°F.

of carrying an electric current, the more noble metal will corrode less rapidly, whereas the less noble metal will corrode more rapidly than normal as a result of the development of an electric current."[24] Therefore, depending upon service atmosphere and the separation in the electromotive series (Table 2-3), galvanic corrosion can be a problem in a dissimilar metal joint.

The factors governing corrosion are conductivity of the circuit, potential difference, polarization, relative cathode and anode areas, geometrical relationship between dissimilar metal surfaces, and contact between metals. The conductivity of the circuit depends upon the service environment and the potential depends upon the relative positions of the dissimilar metals in the galvanic series of the following table.

Release Materials

Finally, release materials which are an important practical consideration in joining similar as well as dissimilar materials will be reviewed briefly here.

It is necessary to use release or stopweld materials between the components being joined and associated bonding fixtures. Metallic or ceramic materials are used. To function as a release material, the following general requirements must be met:

1. No bond should form between the components being joined and the bonding fixture. A possible exception to this rule would be the case wherein a weak bond is used to perform the release task.

TABLE 2-3. RELATIVE CORRODABILITY OF METALS AND ALLOYS[a](22)

	Magnesium
	Magnesium alloys
	Aluminum (pure and Alclad)
	Zinc
	Cadmium
	Aluminum alloys
	Chromium
	Carbon steel
	Copper bearing steel
	Cast iron gray
ANODIC END	Chromium steel (4-6% Cr)
	Chromium steel (12-14% Cr)*[b]
	Chromium steel (16-18% Cr)*
	Chromium steel (23-30% Cr)*
	Nickel-chromium-copper cast iron
	Nickel-chromium steel (7% Ni, 17% Cr)*
	Nickel-chromium steel (8% Ni, 18% Cr)*
	Nickel-chromium steel (14% Ni, 23% Cr)*
	Nickel-chromium steel (20% Ni, 25% Cr)*
	Nickel-chromium-molybdenum steel (12% Ni, 18% Cr, 3% Mo)*
	Lead-tin solder
	Lead
	Tin nickel*
	Nickel-chromium-iron alloy (62% Ni, 15% Cr, 23% Fe)*
	Nickel-chromium-iron alloy (79% Ni, 14% Cr, 7% Fe)*
	Nickel-chromium alloy (80% Ni, 20% Cr)*
	HYDROGEN
	Brasses
	Copper
CATHODIC END	Bronzes
	Copper-nickel-zinc alloys (nickel silver)
	Nickel-copper alloy
	Nickel**
	Nickel-chromium-iron alloy (62% Ni, 15% Cr, 23% Fe)**

[a] Based on electromotive series.

* Indicates active state.

** Passive state.

TABLE 2-3. RELATIVE CORRODABILITY OF METALS AND ALLOYS[a] (22)

(Continued)

	Nickel-chromium-iron alloy (79% Ni, 14% Cr, 7% Fe)**
	Nickel-chromium alloy (80% Ni, 20% Cr)**
	Chromium steel (12-14% Cr)**
	Chromium steel (16-18% Cr)**
	Nickel-chromium steel (7% Ni, 17% Cr)**
CATHODIC END	Nickel-chromium steel (8% Ni, 18% Cr)**
	Nickel-chromium steel (14% Ni, 23% Cr)**
	Chromium steel (23-30% Cr)**
	Nickel-chromium steel (20% Ni, 25% Cr)**
	Nickel-chromium-molybdenum steel (12% Ni, 18% Cr, 3% Mo)**
	Silver
	Graphite
	Gold
	Platinum

[a] Based on electromotive series.

* Indicates active state.

** Passive state.

2. The release material should not contaminate the parts being joined.

3. The release material must be available in a usable form, readily applied and removed after the bonding operation.

As would be expected, release materials generally have high melting points with respect to the melting points of the metals to be joined.

E. SUMMARY

The basic process parameters of pressure, temperature, time and atmosphere have been delineated and their influence on the operation of the process discussed. The diffusion bonding practice has been reviewed and the general procedures have been described. These include bonding similar and dissimilar metals, with and without intermediate metals. The practical considerations involved in achieving intimate contact and modification of the interface by diffusion have been described for bonding of similar and dissimilar materials. To highlight the process features, the following overall advantages and limitations of diffusion bonding are presented.

Advantages:

1. Metal can be bonded to itself and to many other metals with little or no change in the physical or metallurgical properties.

2. Diffusion bonding is the preferred and possibly the only way that certain combinations of materials can be joined. Examples of this type are heterogeneous composites of different metals, metal-ceramic compounds and cermets.

3. Diffusion bonding can be performed in a solid state eliminating cast structure in the bond area.

4. With an intermediate material, the bonding temperature may be low enough to eliminate any micro structural changes in the base metal; namely, annealing, recrystallization, and grain growth.

5. The diffusion bonded component behaves like a solid homogenous body.

6. The diffusion bonding cycle may be a portion of the heat treatment of a material.

7. A diffusion bond is continuous and gas-tight throughout the joint area. Therefore, there are no protective coating requirements in the joint area, unlike resistance welded or riveted joints.

8. Diffusion bonded joints are less prone to corrosion attack than brazed joints. The smooth joint surfaces facilitate application of protective coatings.

9. Multiplicity of joints can be made simultaneously.

10. Close dimensional control can be achieved in diffusion bonded joints with little or no finishing required after bonding.

11. Weight reductions are possible due to elimination of rivets, fillers and double coating.

Limitations:

1. Matching and smooth bonding surfaces are required.

2. Normally abrasive or chemical cleaning is necessary prior to diffusion bonding. The extent of this cleaning is dependent upon the materials and deformation during the bonding operation.

3. The elevated temperatures normally require that the bonding be done in a vacuum or inert atmosphere.

4. The cost of the bonding equipment varies considerably. It can be expensive and will depend upon the temperatures, pressures, purity of the atmosphere during bonding, and the size of the components to be joined.

5. Although the use of an intermediate metal enhances the joining operation, more extended diffusion annealing is necessary to obtain a joint having base metal properties. The acceptability

of low melting constituents must be considered. The selection of the intermediate must consider formation of mechanically undesirable constituents, such as brittle phases and intermediate compounds.

6. Normally there is no fillet adjacent to a diffusion bonded joint. Therefore, a stress concentration similar to a small radius crack can exist. This factor and its possible removal should be considered in the joint design.

CHAPTER 3. STATUS OF DIFFUSION BONDING

A. INTRODUCTION

This chapter will describe the manner in which the "Diffusion Bonding Fundamentals" have been utilized for actual applications in practice. The governing parameters of the process are pressure, temperature, time and atmosphere. Different diffusion bonding techniques based on the different combinations of these parameters have been developed and will be described in this chapter. All of these techniques can be adapted to the use of either of the two basic types of joint systems described previously, viz. base-metal to base-metal and diffusion bonding using intermediate metals. The techniques also include means for overcoming the practical limitations in achievement of intimate contact and modification of interface through mass transport.

The chapter will present first the different diffusion bonding techniques and a tabulated list of prior applications of these techniques. Next, the experimental work on joining various materials, based on the current understanding of the fundamentals, will be presented. The chapter will then be concluded with a summary of the status of utilization of diffusion bonding in practice and in the laboratory.

B. DIFFUSION BONDING TECHNIQUES

Variations of the parameters pressure, time, temperature and atmosphere, and the nature of the interface during bonding, give rise

to different diffusion bonding techniques. On this basis, the currently used techniques can be divided into four general classes,[25] viz.

1. Yield stress controlled bonding
2. Diffusion controlled bonding
3. Creep controlled bonding
4. Transient melt diffusion bonding

Processes such as ultrasonic welding, explosive welding and friction welding are related solid state joining processes. However, they will not be discussed here due to the specialized forms of energy employed.

Each of the classes listed under diffusion bonding above will be considered separately for its special characteristics. The techniques utilizing these characteristics will be described under the corresponding class.

1. YIELD STRESS CONTROLLED BONDING

Description

This procedure utilizes bonding pressures well above the yield stress at the bonding temperature, to produce intimate contact. Subsequent diffusion treatments may be used to assure a strong bond. The first stage of diffusion bonding is accomplished in a few seconds or minutes by this process. The diffusion time is controlled by the

perfection of the joint that is necessary to meet the service requirements.

The major techniques which conform to these characteristics are: (a) pressure welding, and (b) roll bonding. They will be briefly described here.

(a) Pressure Welding

The high bonding pressures are generally provided by hydraulic or other mechanical means. The elevated temperature is provided through resistance heating, induction heating, radiant heating, oxyacetylene torch heating or any other method that can be easily used. The requirements for the high bonding pressures and temperatures may be reduced somewhat through the use of suitable intermediate materials in the joint.

This technique has been used for a variety of applications with conventional materials. Some of these applications are: girth joints in steel pipe, production of aluminum-copper composites for electronic components, etc. Some of these applications may be conducted in air without any protective atmosphere and with available conventional equipment. The use of this technique for sophisticated applications involving exotic and other uncommon materials has been limited. A typical example of the use of pressure welding is seen in Figure 3-1.

The characteristic advantages and limitations of this technique are the following:

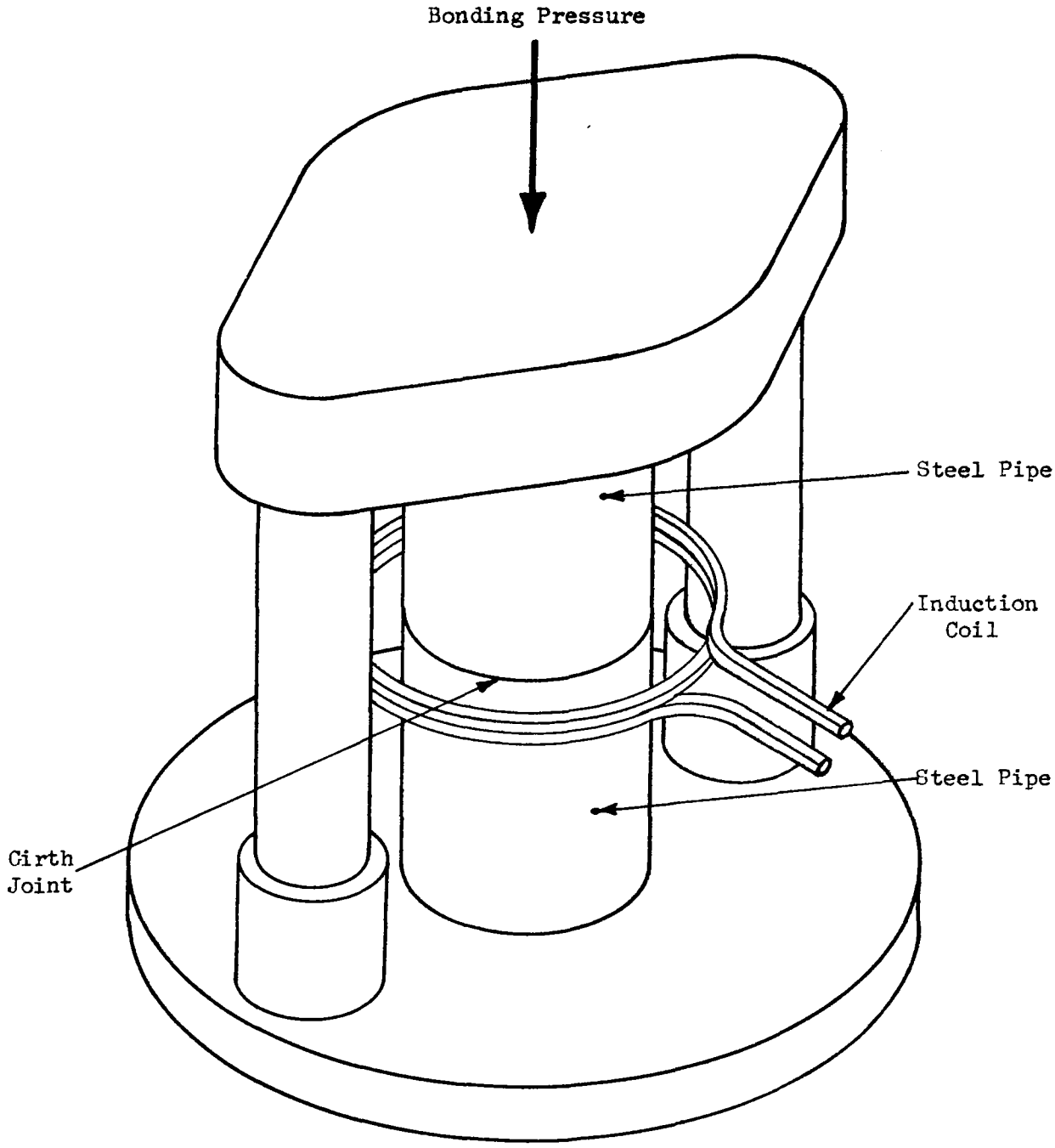

Figure 3-1. Pressure Welding of Girth Joints in Steel Pipe. (From: "Induction Pressure Welding of Girth Joints in Steel Pipe" by R. L. Koppenhofer, et al. Welding Journal, July, 1960, p. 685, Reference 26).

Advantages:

1. The bonding may be conducted with inexpensive, conventional hydraulic presses.

2. The bonding time can be very short, on the order of seconds or minutes. This is obviously desirable for large volume production.

3. Compared to diffusion controlled bonding, a rougher surface and a higher level of surface contamination may be acceptable.

4. This technique is particularly desirable for joining dissimilar materials because of the large interfacial deformation.

Limitations:

1. The large deformations required by this technique limit the possible joint configurations that can be fabricated. The material adjacent to the joint must be able to withstand the bonding pressure without unacceptable deformation.

2. The cost of finish machining subsequent to bonding may add to the fabrication costs.

3. The bonding pressure is usually exerted in only one direction, thus limiting the joints generally to one plane, viz. at right angles to the direction of bond pressure.

4. The bonding pressure and temperature requirements for joining high-temperature, high-strength materials by this technique may be too high for use with available equipment. This might necessitate modification of conventional equipment resulting in increased costs.

(b) Roll Bonding

This technique utilizes conventional rolling mills to produce large reductions in thickness of the order of 60% and above. Such reduction of metals in contact with each other produces excellent solid state bonds.

The procedure usually consists of the following steps. The components to be bonded are stacked up in the desired fashion with additional tooling as required. This assembly is then placed in an appropriate air-tight envelope, evacuated and sealed. The sealed envelope is then hot rolled, in the same manner as a single metal plate, to the desired reduction in thickness. Bonding of the components is accomplished in this operation. The bonded component may then be contoured, if required, by appropriate hot or cold rolling or other forming processes. Finally, the envelope is stripped off and the support tooling is removed by appropriate mechanical or chemical methods.

This technique is used to join flat structures and composites. Metallic cladding and lamination can be accomplished by this technique.[27] The procedure is used for producing flat plate nuclear reactor fuel elements and subassemblies which involve metal-ceramic joints.

A highly interesting and important application concerns the specially developed roll bonding technique for fabricating corrugated core sandwich panels for high strength/weight ratio structures.[28] This technique has been successfully applied to fabrication of large (3' x 6') titanium alloy sandwich structures and is reported[28] to be feasible for aluminum, stainless steel, columbium and molybdenum. The core in these sandwich structures is corrugated and may be of the standard truss core type with 45° ribs, or special types such as X truss, vertical ribs, multi-layers, etc. The panels may include inserts such as stiffeners, supports, edge members, joining attachments, etc. incorporated during roll bonding. The corrugated core and facing are supported by filler bars or spacers of steel or copper during the rolling operation and forming. These spacers are subsequently removed by acid leaching. Some examples of these structures are seen in Figures 3-2 and 3-3.

The characteristic advantages and limitations of this technique are as follows:

Advantages:

1. Complex contoured composite structures such as laminates and cellular sandwich structures can be fabricated by this technique.

2. The maximum size of these structures is controlled only be the rolling mill capacity.

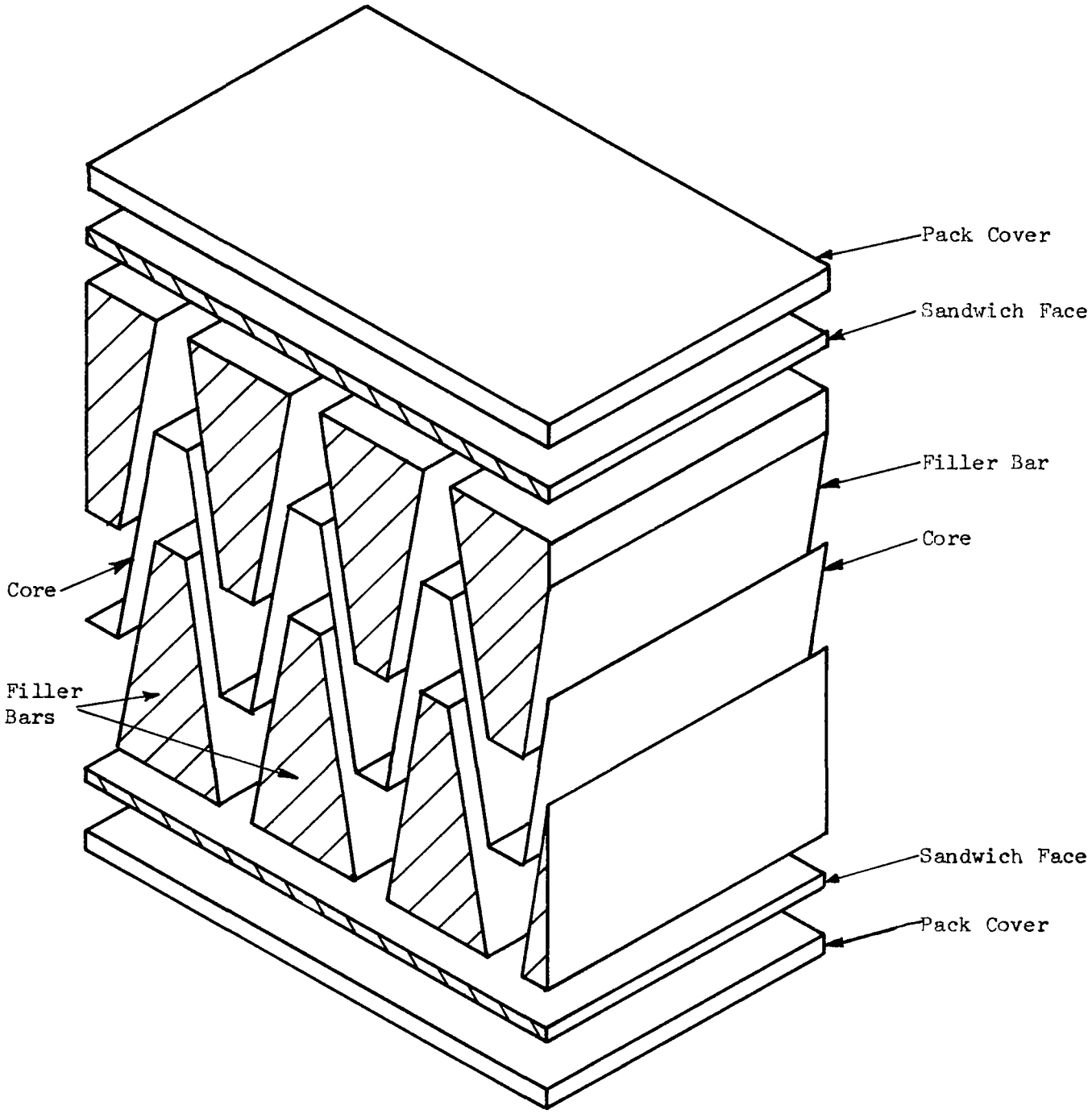

Figure 3-2. Exploded view of roll-welded pack ready for hot rolling (envelope not shown). (From: "Roll-Welded Sandwich Structures", Douglas Aircraft Co., Inc. Publication, Reference 28).

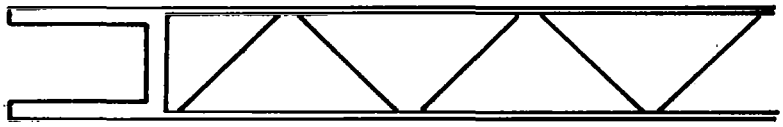

(a) Titanium Alloy Ti-6Al-4V Sandwich with Edge Channel Insert

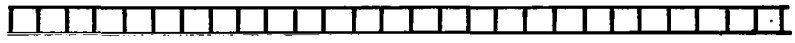

(b) Titanium Foil Sandwich with 2 mil Vertical-Rib Core

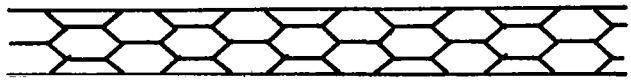

(c) Titanium Alloy A-55 Sandwich with 6 mil Multi-layer Rib Core

Figure 3-3. Some examples of Roll-Welded Titanium Alloy Sandwich Structures. (From: "Roll-Welded Sandwich Structures", Douglas Aircraft Co., Inc., Publication, Reference 28).

3. Conventional hot rolling facilities may be used.

4. Reduction in thickness--inherent in the process--is accompanied by a proportional increase in length. This allows starting with thicker sheet materials and handling of smaller original sizes of components to end up with longer finished products and lighter gauge sheet materials. The result is a reduction in fabrication costs per unit area of the finished product.

5. The technique has been demonstrated to be applicable to fabrication of aerospace structures and its overall cost may be less than other fabrication methods for producing similar structures.

6. The technique is useful for production of continuous bonds over large areas with little or no need for subsequent diffusion treatments.

Limitations:

1. Support tooling such as removable spacers and filler bars is needed for configurations other than laminates.

2. The use of roll bonding for the elevated-temperature, high-strength materials may require modification of conventional rolling facilities.

2. DIFFUSION CONTROLLED BONDING

Description

The pressure in diffusion controlled bonding is below the yield stresses of the components, but is still high enough so that large areas of intimate contact are established when the pressure is applied. The bonding pressure causes plastic deformation at the local points of contact between the mating surfaces. Diffusion proceeds across the interface at the localized areas of contact to produce a solid state union. The perfection of the bond depends upon modification of the interface through subsequent diffusion treatments. Depending on the amount of diffusion required, these treatments may range from a few minutes to many hours. The amount of diffusion required would depend on the initial area of localized contact and the service requirements. Intermediate materials may be used in the joint with the usual advantages discussed previously.

The most commonly used processes which can be grouped under this technique are die pressure bonding and isostatic gas pressure bonding. It has to be recognized, however, that these processes can be changed to yield-stress controlled bonding by increasing the applied stress or creep-controlled bonding by lowering the applied stress. The most common examples of the use of these techniques, however, follow the diffusion controlled bonding characteristics.

(a) Isostatic Gas Pressure Bonding[20]

This is the most advanced and most commonly employed diffusion bonding technique. The procedure is as follows:

The components to be joined are fabricated or machined to final size, cleaned and assembled into an expendable container that is sealed by welding to produce a pressure-tight evacuated envelope. The assembled components are heated to an elevated temperature in an autoclave containing an inert gas at high pressure. The pressure is uniformly transmitted and forces all of the mating surfaces into localized intimate contact at their interfaces. The mating surfaces are held under pressure at temperature for a sufficient length of time to allow diffusion across the interface and the formation of a solid state bond. The gas pressures used are generally between 3,000 psi and 15,000 psi with bonding temperatures up to 3000° F and bonding times of the order of 2 to 6 hours.

The gas pressure bonding equipment is essentially an autoclave. Early gas pressure bonding was conducted in hot-wall autoclaves similar to standard corrosion test autoclaves. This equipment is usually limited to 1500° F and 5,000 psi, while it may withstand up to 30,000 psi at 1000° F. Recently, cold-wall autoclaves have been developed which allow very high specimen temperatures, while maintaining the autoclave wall at no more than 300° F. Such autoclaves generally consist of a resistance heated furnace which is placed inside a larger autoclave which is well insulated from the furnace. A sectional view of such equipment is shown in Figure 3-4. Using this approach, Battelle Memorial

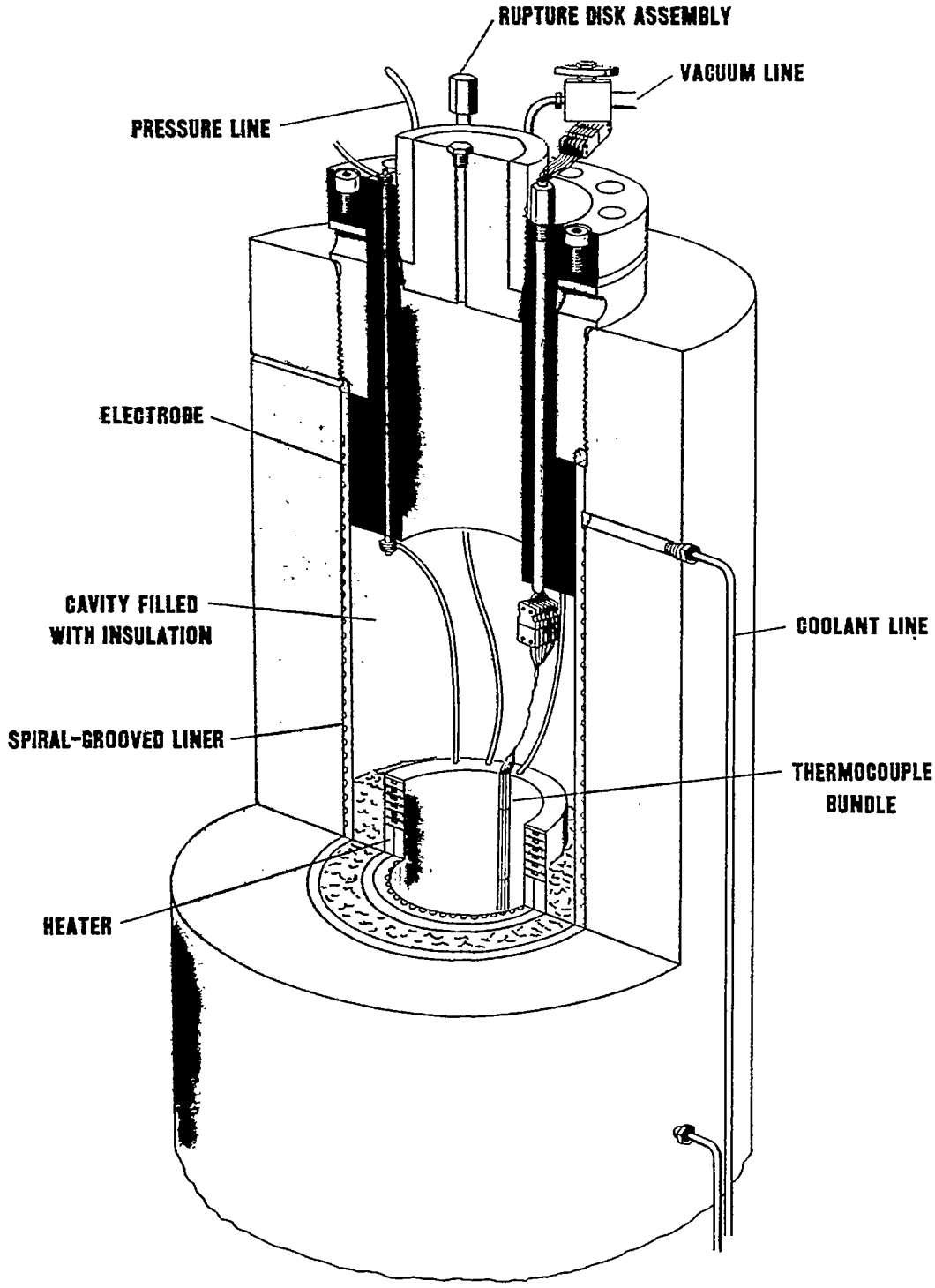

Figure 3-4. Sectional View of Cold-Wall High-Pressure Autoclave. (From: "Gas-Pressure Bonding," DMIC Report 159, September 25, 1961, p. 7, Reference 20).

Institute has developed a cold-wall autoclave in which gas pressures up to 50,000 psi can be used at temperatures up to 3000° F.

Gas pressure bonding has been routinely used for fabricating nuclear reactor fuel elements and subassemblies. Its capability for producing other types of complex structures and components has also been reported, as seen in Figures 3-5 and 3-6.

The characteristic advantages and limitations of this technique are as follows:

Advantages:

1. Complex shapes involving joint areas in different planes may be fabricated by this technique since the bonding pressure is isostatic.

2. Due to the uniform pressure application, brittle materials may be bonded or clad.

3. Close dimensional control is possible by limiting the amount of deformation.

4. A multiplicity of joints can be made in one operation and complex multi-component structures fabricated in one bonding cycle. For such components, the fabricating costs may be lower than for alternative methods of production.

5. The process utilizes an inert gas atmosphere which minimizes surface contamination. This factor is important when no protective envelope is used.

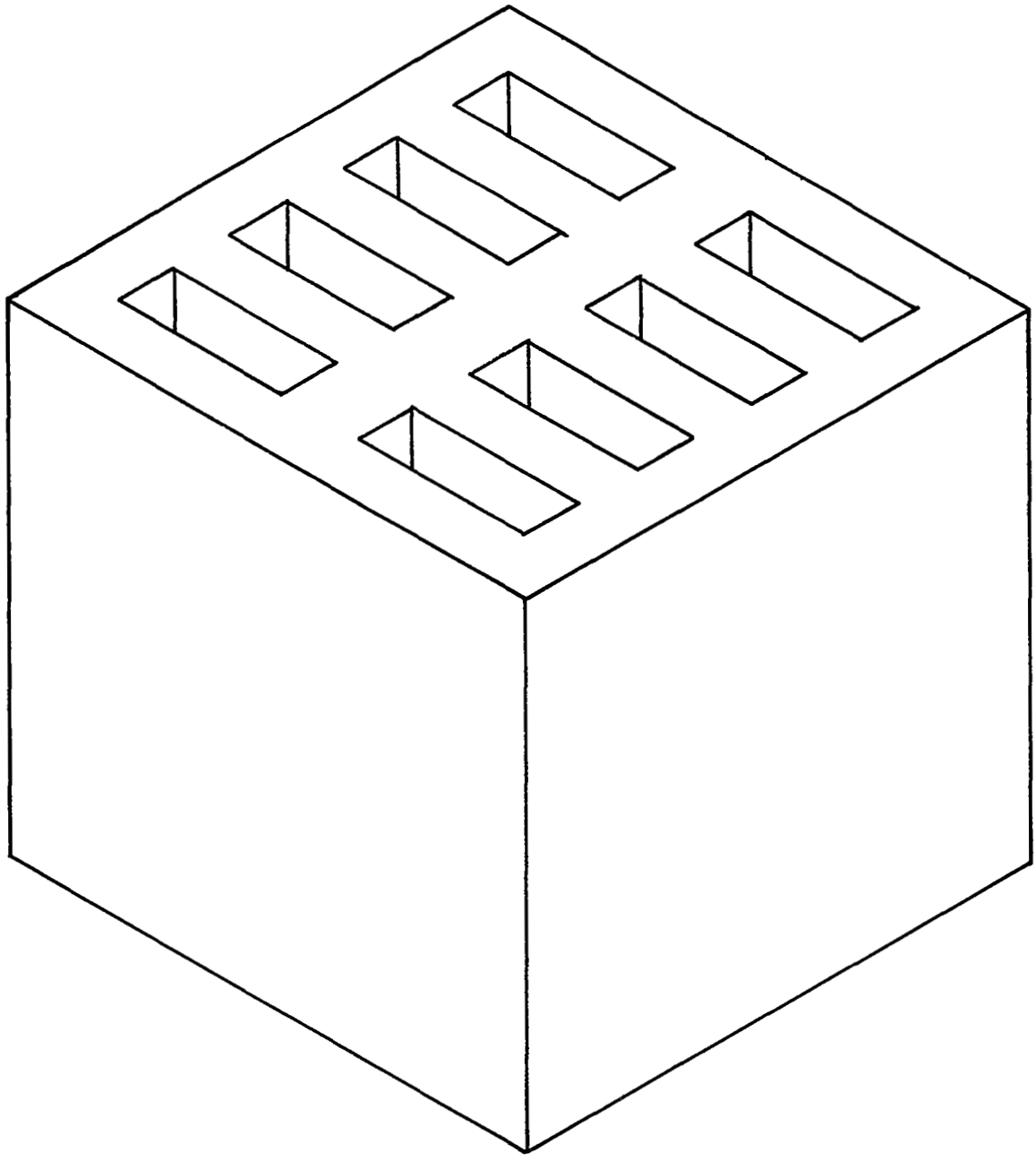

Figure 3-5. Gas-Pressure-Bonded Flat-Plate Assembly with Coolant Channels. (From: "Gas-Pressure Bonding", DMIC Report 159, September, 1961, p. 34, Reference 20).

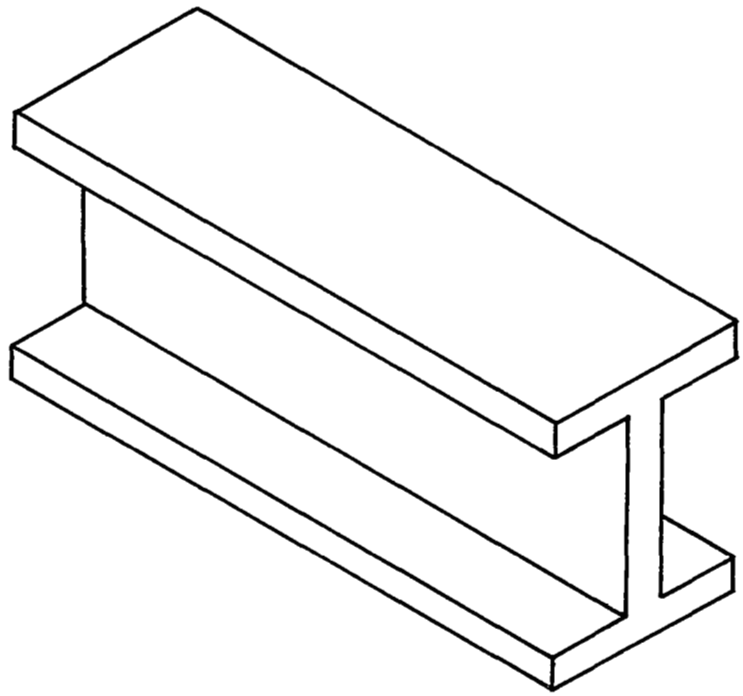

(a) I-Beam Structural Member Produced from Beryllium Sheet.

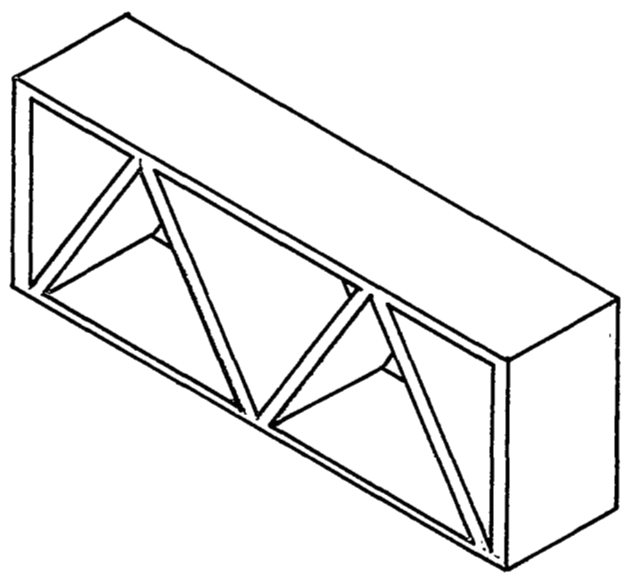

(b) Truss-Supported Airframe Structure made from Columbium Sheet.

Figure 3-6. Gas-Pressure Bonded Sheet Structures (From: "Gas-Pressure Bonding," DMIC Report 159, September, 1961, p. 36, Reference 20).

6. Ceramic, metallic, cermet and dispersion powders can be compacted to very high densities by this technique.

Limitations:

1. Costly equipment is needed for this method of bonding and, for this reason, straight forward joints may be more expensive by this process than alternative methods.

2. The equipment enforces a size limitation on the components that can be bonded. As an example, one of the autoclaves at Battelle Memorial Institute can handle 60" long, 9" diameter work pieces.

3. Bonding cycle time of the order of 3 hours or more is required due to the relatively slow heat up characteristics of an autoclave.

(b) Press Bonding or Die Pressure Bonding

This technique differs from isostatic gas pressure bonding in that it uses some form of die pressure which is exerted in only one direction. However, for applications wherein the joints lie in one direction, die pressure bonding demonstrates several advantages of its own over gas pressure bonding. These advantages will be discussed later.

In employing this method, various types of equipment can be used. The most common form of providing the bond pressure is a hydraulic press with suitable fixtures. Hydraulic presses with platens up to 6 feet in

length and 6 inches in width have been used for diffusion bonding honeycomb core (Figure 3-7).

Russian literature[29] describes some specially designed die pressure bonding equipment for joining small steel, Kovar (low thermal expansion alloy) and other parts on a regular production basis. A fixture and a bonding chamber for making 8 cathode units in one bonding cycle is described. The bonds produced are between the cathode base (NVK alloy*) and the sleeve (Kovar alloy), and also between the base and the disc (LNM alloy*). The pressure is provided by a hydraulic system and bonding is conducted in a vacuum or hydrogen atmosphere. The bonding conditions are 900° C, 0.75 kg/mm^2 and 10 minutes. The parts have been found to be highly reliable in service. The equipment has also been used to develop bonding conditions for various other materials.

Another Russian example[30] consists of an apparatus for producing components made of 2Kh13*, 30KhGSA* and Grade 20* steels. The equipment is used for bonding rotatable elbow bend junctions, end caps and splines in these materials. The equipment consists of a vacuum chamber made of stainless steel measuring 300 x 400 x 400 mm. Pressure is transmitted by a hydraulic system. A special stopweld GK2h-94* hydrophobic silico organic liquid is used to prevent welding of fixtures to the components to be bonded. This stopweld decomposes to a high-melting film at 300° C which remains stable even at over 1000° C and hinders

---

* Information on the meaning of these Russian material designations was not available.

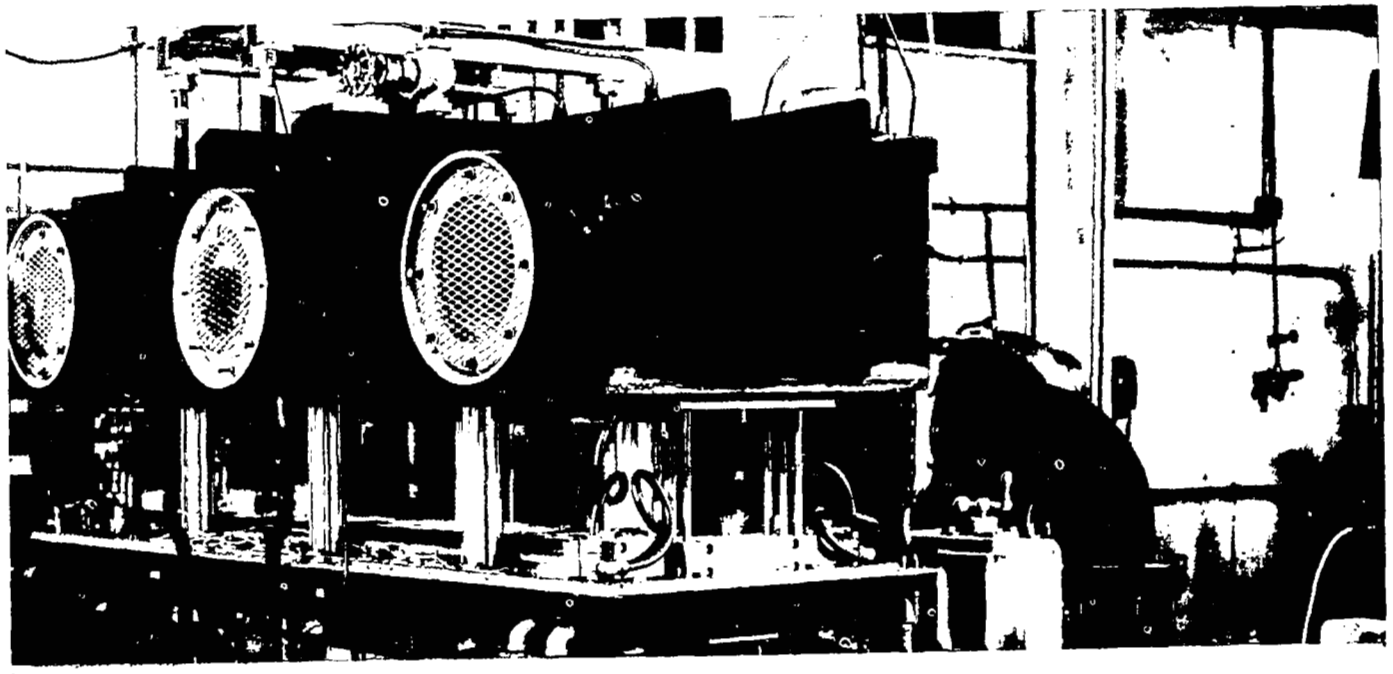

Figure 3-7. Hydraulic Press Used for Diffusion Bonding Honeycomb Core (courtesy Hexcel Products Inc.).

diffusion. Some of the fixtures for holding the components were made of cadmium copper. The bonding conditions for the various joints are presented in the tabulated data at the end of this section. It is significant that the elbow bends (Figure 3-8) fabricated in this manner were extensively tested by pressure cycling and vibration testing and revealed no leaks or defects in the joint microstructure. Another Russian example[31] describes a die pressure welding setup used for the bonding of hard-metal tips to cutting tools. The diffusion bonded tips were compared with tips joined by other methods and were found to be highly superior.

Another means of providing pressure for die pressure bonding is through thermal expansion. The materials to be joined may be placed in a die made from suitable heat resistant material with a lower thermal expansion coefficient. On heating this assemblage, the differential expansion between the die and the materials to be joined provides the pressure to cause bonding (Figure 3-9).

The heat in these cases may be supplied through resistance heating or induction heating depending on the joint configuration. The Russians seem to favor induction heating in most of their work. Both of the Russian examples mentioned above utilize induction heating.

The heat-up times can range from a minute to a half hour depending primarily on the mass and thermal properties of fixtures and materials to be joined. The bonding cycle time can be reduced as much as two hours or more below that of gas pressure bonding.

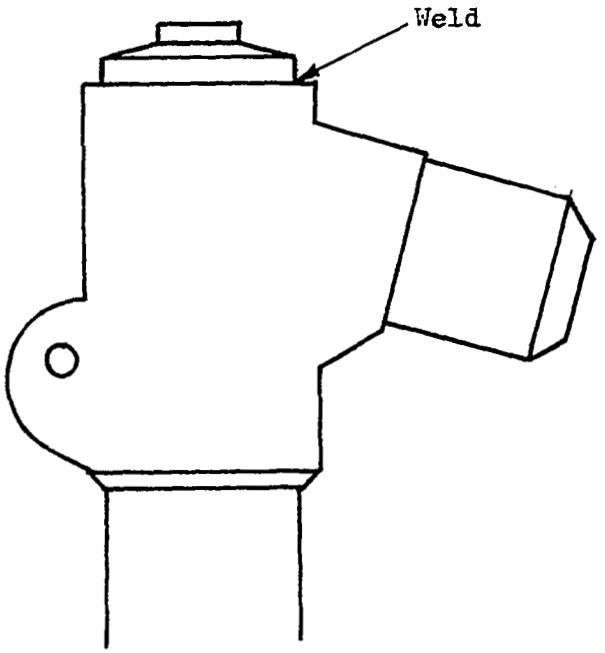

(a) Rotatable Elbow Bend Junction

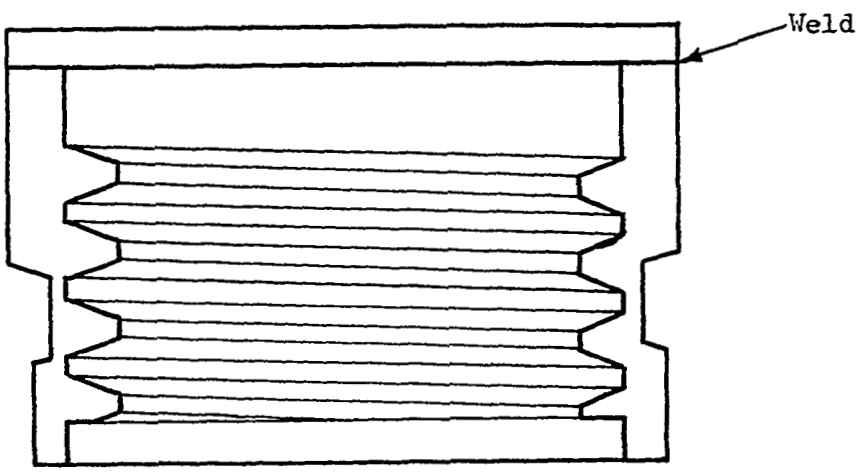

(b) End Cap

Figure 3-8. Diffusion Bonded Elbow Bend Junctions and End Caps. (From: "Diffusion Welding Used in Production of Certain Types of Component," by S. Ushakova, Welding Production, May, 1963, p. 35).

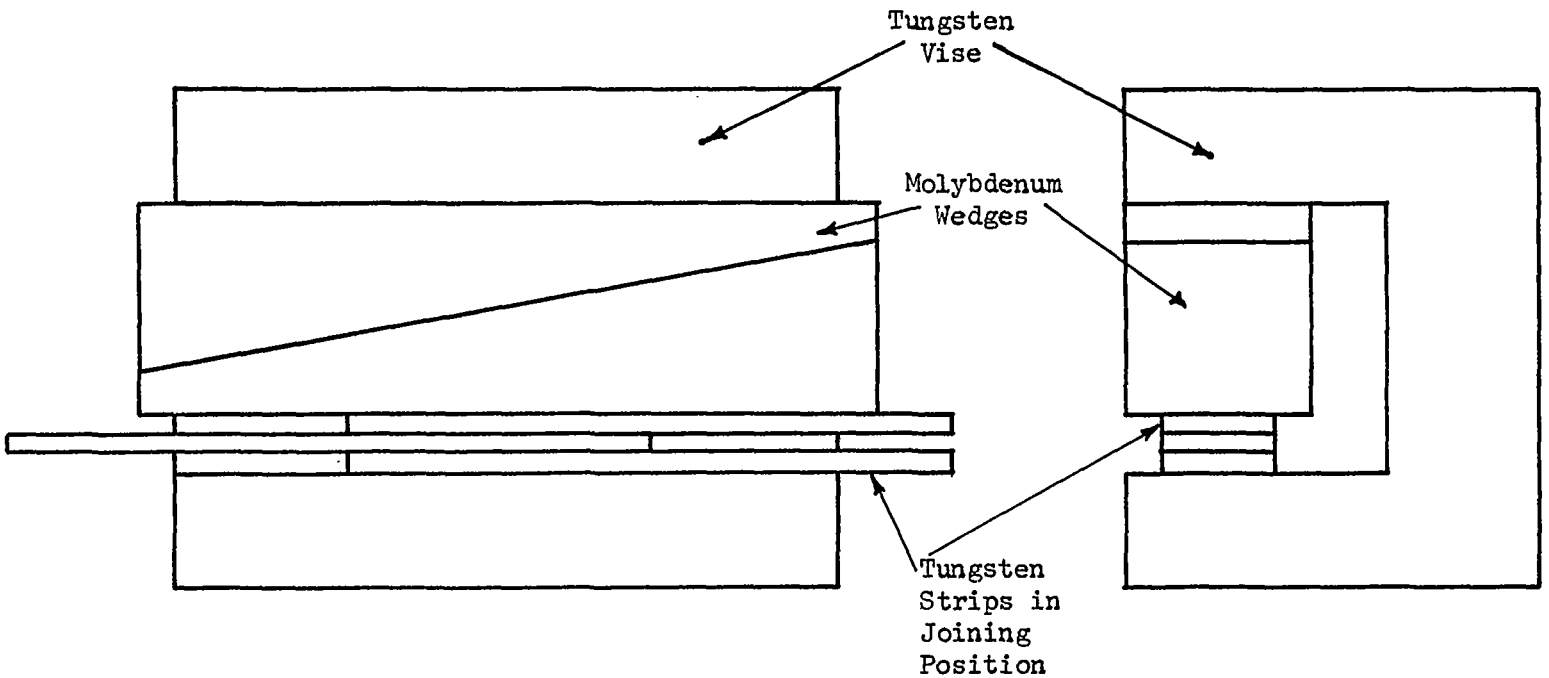

Figure 3-9. Schematic of High-Temperature Vise for Exerting Bonding Pressure through Thermal Expansion. (From: "The Activated Joining of Tungsten", by J. H. Brophy, et al. Welding Journal (September, 1963), p. 406-S, Reference 32).

Notable applications of die pressure bonding in the United States are production of honeycomb core from various materials and fabrication of multi-layer composites.

The characteristic advantages and limitations of this process are as follows:

Advantages:

1. Comparatively inexpensive equipment is used. The maximum size of the component is controlled by the platen size. Hydraulic presses with platen sizes of 6' x 6" have been used for press bonding applications.

2. The use of resistance or induction heating makes the bonding cycles shorter when compared with gas pressure bonding.

3. This technique is particularly suitable for joining expandable structures with all the joints in one direction. Production of honeycomb core is the major example of such structures.

Limitations:

1. The method is not as flexible as gas pressure bonding since it is generally limited to fabricating components with all the joints in one plane.

2. Care is needed to insure the application of uniform and even bond pressure at the joint interface.

3. CREEP CONTROLLED BONDING

Description

This technique markedly differs from the others in that considerably lower bonding pressures are used. The low pressures are combined with high bonding temperatures and long times (up to 24 hours and more) so that creep at the interface allows the surfaces to move together establishing a bond.

It should be recognized that the boundaries between creep controlled bonding and diffusion controlled or yield stress controlled bonding are not precise. The temperature may be increased so that the process is said to be diffusion controlled. On the other hand, the temperature may be so high that the base metal yield strength will be less than the bonding pressure. The process is then yield strength controlled.

The most commonly used process based on the principles of creep controlled bonding is low pressure bonding or vacuum diffusion bonding.

Low Pressure Bonding or Vacuum Diffusion Bonding

The equipment needed for this process is comparatively simple and inexpensive. The bonding pressure can be applied by a dead weight or through a differential vacuum pressure. The heat can be provided by resistance heating, induction heating, radiant gas heating (if an inert

gas atmosphere is used), or any other means that is convenient. An inert gas atmosphere or vacuum is normally used.

In practice, the parts to be bonded are placed in a chamber and the proper atmosphere is provided. The bonding temperature and pressure are held for a sufficient length of time to achieve intimate contact and desired diffusion and grain growth across the interface.

The process is particularly attractive for joining structures containing foil and sheet material in hollow configurations which cannot withstand high bonding pressures. It has been used for producing flat and curved prototype honeycomb sandwich panels from refractory metal alloys and superalloys (Figures 3-10 and 3-11).

The characteristic advantages and limitations of this process are described next.

Advantages:

1. Available brazing equipment can be used and/or other existing equipment modified to suit the purpose. The major saving in cost is due to the low required bonding pressures.

2. This is a possible technique for bonding facings to cellular cores and fabricating other similar structures which cannot withstand high bonding pressures.

3. Because of the low bonding pressures involved, this process has the potential of being used on large bond area structures. With

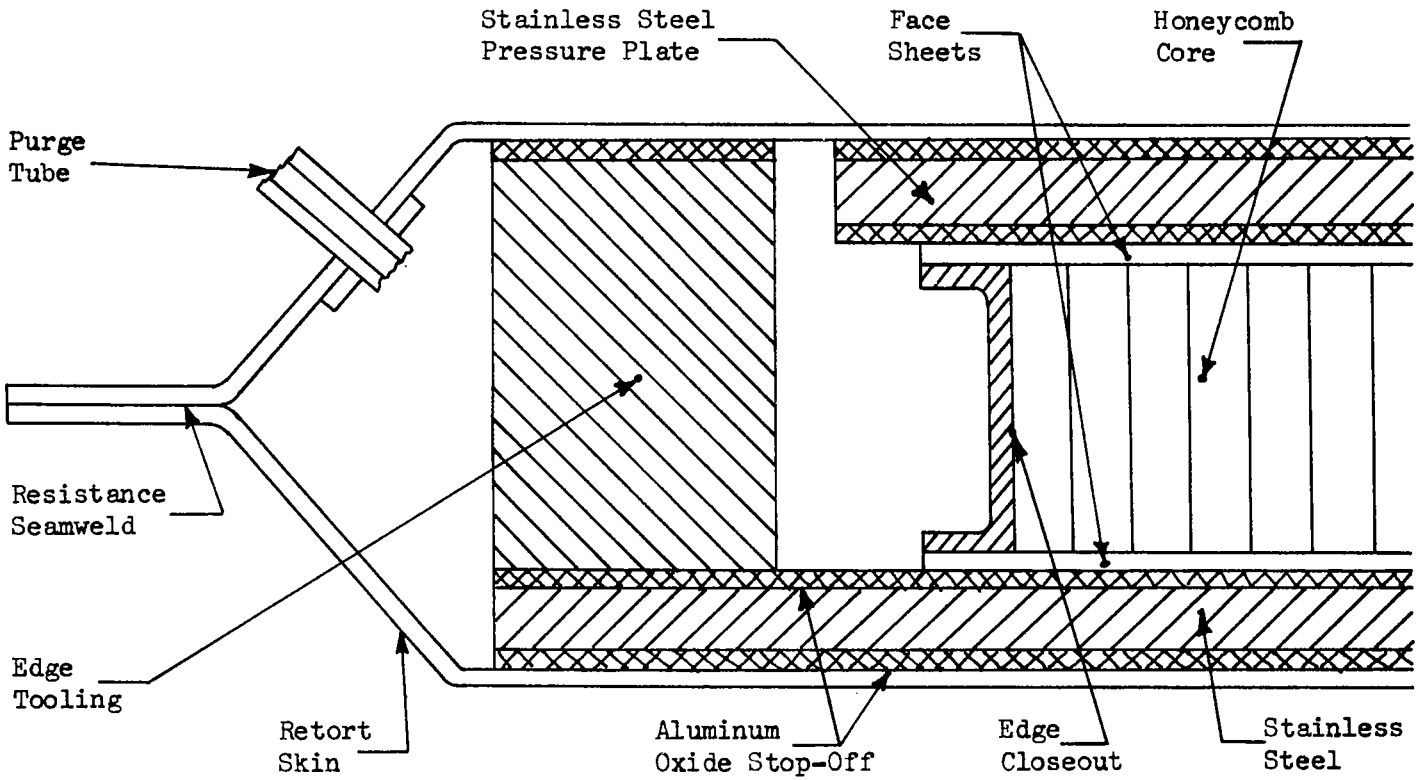

Figure 3-10. Cross-Section of Diffusion Bonding Retort (From: "Diffusion Bonded Honeycomb Sandwich Panels", NAA Report IR-7-980-(II), p. 57, Reference 33)

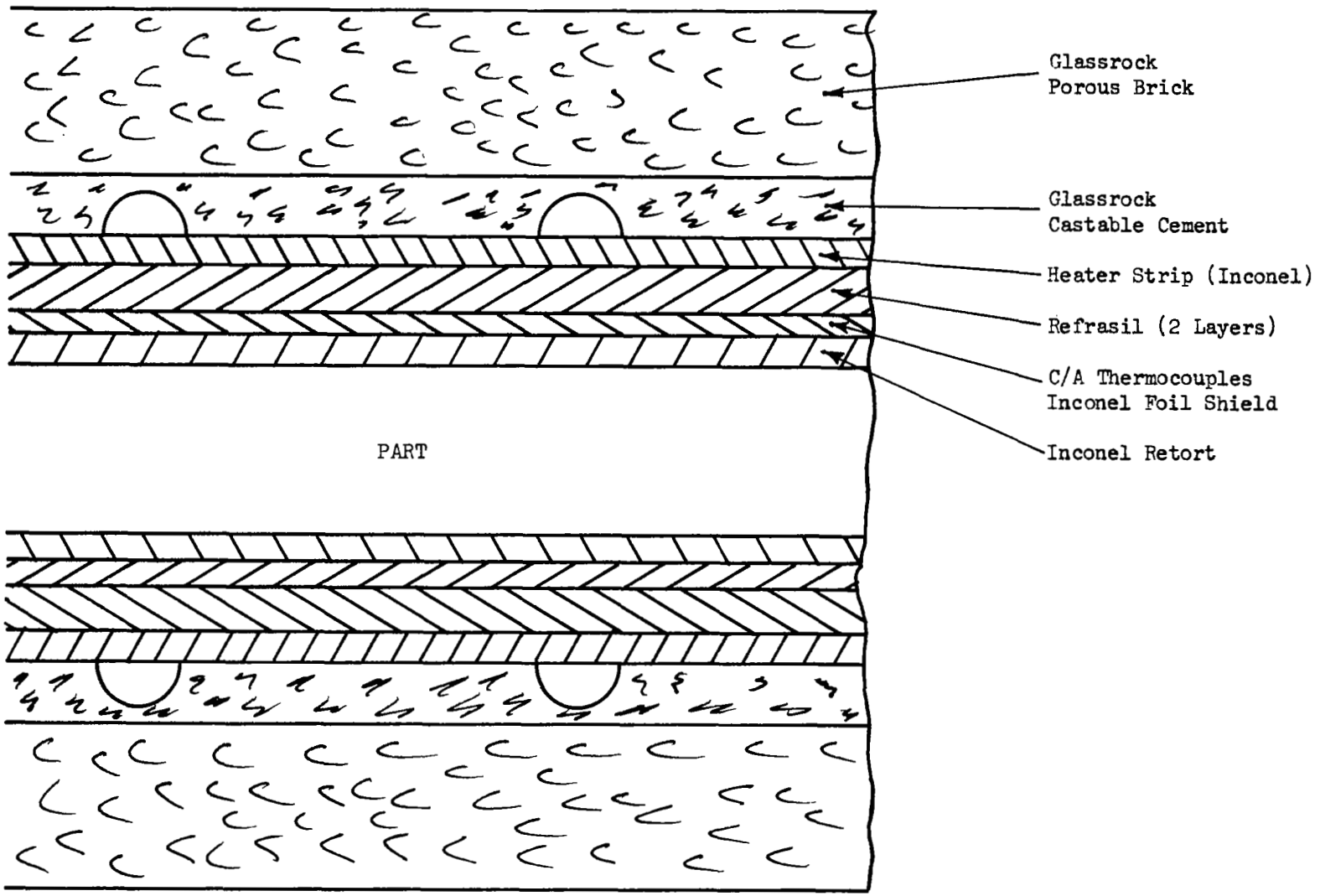

Figure 3-11. Cross-Section of Electric Blanket Assembly for Diffusion Bonding of Sandwich Panels. (From: "Diffusion Bonded Honeycomb Sandwich Panels", NAA Report IR-7-980-(II), p. 58, Reference 33)

suitable tooling, the process can be utilized both for flat and curved structures.

Limitations:

1. The bonding cycles may be as long as 24 hours or more.

2. The cost of maintaining high temperatures for extended times should be considered.

3. Very good surface preparation and joint fit-up are essential for obtaining good bonds.

4. TRANSIENT MELT DIFFUSION BONDING

Description

This class of diffusion bonding utilizes a thin liquid phase at the interface to effect a bond at contact pressures. The transient liquid phase is provided by using a low melting point alloy or a metal that forms a low melting eutectic with the base metal. The word "transient" is used to indicate that the liquid phase can be eliminated by subsequent diffusion treatments.

The liquid phase wets the base metals and a diffusion bridge is established across the interface and atoms with high mobility result in rapid mass transport. The thickness of the liquid layer has to be

sufficient to fill all the asperities on the mating surfaces and so the minimum desired thickness of the layer will depend on surface roughness.

When desired, the liquid phase is diffused into the base metal(s) to obtain a higher joint remelt temperature. The diffusion time will depend on the need to remove the transient melt phase from the joint. This technique can produce strong bonds continuous over large areas at low bonding pressures. The joining temperatures depend upon the eutectic or melting temperature of the intermediate alloy. In practice, this process is generally called diffusion brazing and eutectic bonding.

Diffusion Brazing or Braze Bonding and Eutectic Bonding

There are two different methods by which the desired transient melt phase is produced at the joint. One is the use of conventional braze filler alloys with the bonding temperature dependent on the melting point of the braze alloy. This method is the so-called diffusion brazing or braze bonding. The other method called eutectic bonding involves the use of an intermediate metal in the joint which either forms a low melting eutectic or has a depressed solidus when combined with the base metal(s). The bonding temperature is raised above the eutectic temperature or the depressed solidus temperature, and this produces a transient liquid phase at the interface between the base metal(s) and the intermediate metal. Subsequently, the liquid phases in both of these processes are diffused away from the joint. The initial location of the liquid phase in each of these methods is illustrated in Figure 3-12.

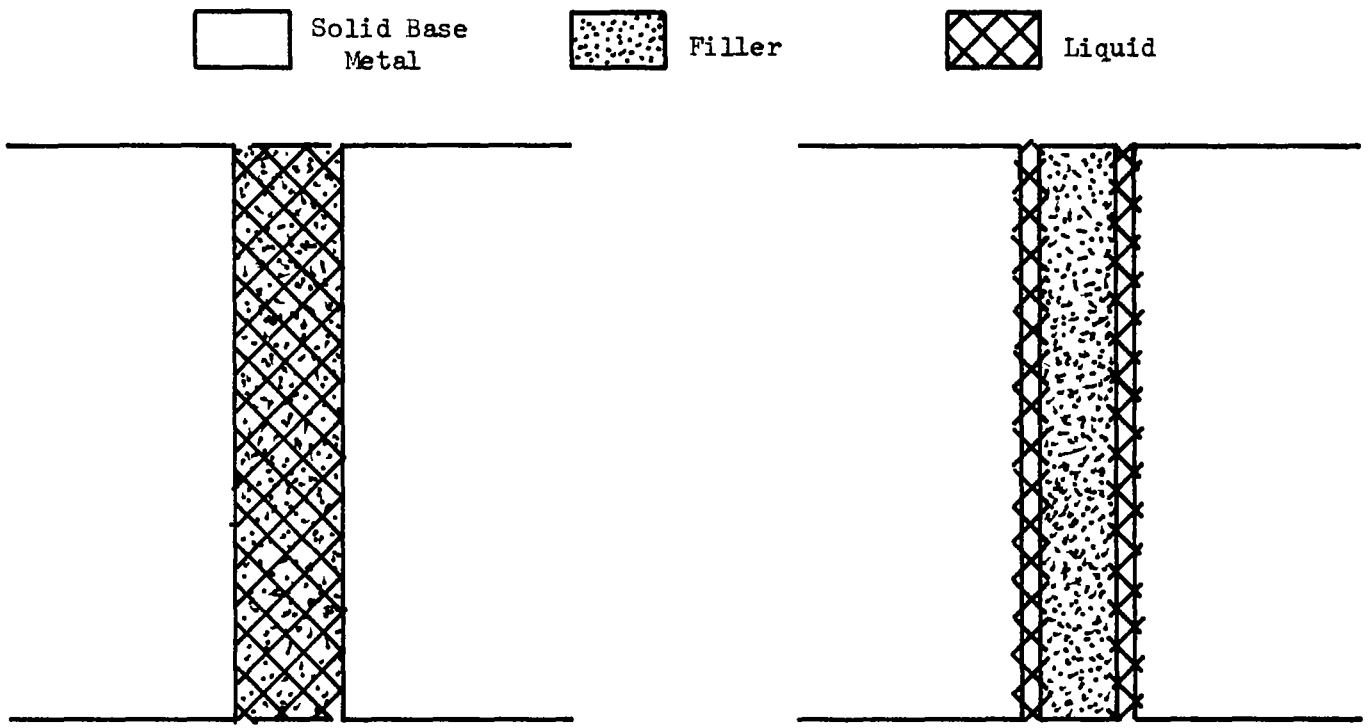

(a) Diffusion Brazing

(b) Eutectic Bonding

Figure 3-12. Formation of Transient Liquid Phase in Diffusion Brazing and Eutectic Bonding.

With the exception of the difference in producing the liquid phase, both the processes operate identically.

Usually the joining can be performed with available brazing equipment. The growing applications of high temperature brazing have led to significant developments in equipment and tooling for sophisticated brazing applications. Brazing in vacuum or in inert atmospheres is routinely done, and this experience is applicable to braze bonding and eutectic bonding. The methods of heating that are used include radiant, induction, resistance and others. The pressures used for braze and eutectic bonding are usually very low (of the order of 1 - 15 psi). They may be provided by dead weight, mechanically or through differential vacuum. There are certain applications where significantly higher bonding pressures may be utilized so as to squeeze the transient melt phase out of the joint, thereby minimizing the amount in the bond.

These processes have been used to fabricate components such as tungsten rocket nozzles with a high remelt temperature, clad composites for specialized applications and sandwich structures, etc. The eutectic bonding technique in particular has been utilized widely for fabricating parts from zircalloy and aluminum for nuclear reactor applications.[34-36]

The characteristic advantages and limitations are described below.

Advantages:

1. Bonding pressure is approximately 1 - 15 psi.

2. Frequently the bonding operation can be conducted at temperatures that are low with respect to the melting point of the base metal. This advantage is significant for tungsten and molybdenum where the processes permit operation below the recrystallization temperature of the base metals by using fillers such as 50Cr:50Ni alloy, etc. The resulting joint, however, can possess high remelt properties by employing subsequent diffusion of the liquid phase.[37]

3. Conventional brazing equipment is usually satisfactory.

4. Cost of fabrication should be similar to conventional brazing.

5. Because of the low bonding pressures, it may be possible to fabricate large flat or curved panel structures using an "evacuated bag" method to provide the protective atmosphere and bonding pressure.

6. The metallurgical and mechanical properties of the joint can approach the base metal properties.

Limitations:

1. Elimination of low joint remelt temperature requires prolonged diffusion treatments.

2. The high diffusivity of the liquid phase accelerates any tendencies for void formation that can result from the interdiffusion of dissimilar metals in the bond area.

C. DATA ON PRACTICAL APPLICATIONS OF DIFFUSION BONDING

Following the description of the major diffusion bonding techniques used in practice, a presentation is made of the production applications for which these techniques have been employed. Table 3-1 lists these applications by the techniques utilized and briefly describes the nature of the applications. The sources of information for this table are listed at the end of this report and should be referred to for further details.

TABLE 3-1. SUMMARY OF PRACTICAL APPLICATIONS OF DIFFUSION BONDING TECHNIQUES

Technique	Application	Base Metal(s)	Intermediate Metal(s)	Reference No.
1. YIELD STRESS CONTROLLED BONDING				
a. Pressure Welding	1. Fabrication of aluminum-copper composites and joints from foil and wire for electronic industry applications.	Cu to Al	None	38
	2. Pressure welding of sintered molybdenum sheet to itself.	Mo to Mo Mo to Mo	None Cb, Ta, Cr	39 39
	3. Production of girth joints in steel pipe.	Steel to steel	None	26
b. Roll Bonding	1. Production of corrugated core sandwich structures from titanium, aluminum, columbium, molybdenum, stainless steel, etc.	Ti to Ti Al to Al Cb to Cb Mo to Mo Stainless to stainless	None " " " "	28 " " " "
	2. Production of dissimilar metal laminates by roll cladding.	Ti to steel Ta to steel	None "	27 "
	3. Production of 1/32" thick fuel plates with compacted powdered cermet core and stainless steel cladding.	406 stainless cladding -UO_2 core	None	40

TABLE 3-1. SUMMARY OF PRACTICAL APPLICATIONS OF DIFFUSION BONDING TECHNIQUES (Continued)

Technique	Application	Base Metal(s)	Intermediate Metal(s)	Reference No.
2. DIFFUSION CONTROLLED BONDING				
a. Gas Pressure Bonding	1. Molybdenum cladding of fuel elements for nuclear reactors.	Mo to Mo	None	20, 21
	2. Fabrication of columbium clad flat-plate and rod-type fuel elements and flat-plate sub-assemblies for nuclear reactors.	Cb to Cb	None	20, 21
		Cb to UO_2	"	"
		Cb to UC	"	"
	3. Fabrication of zircaloy clad fuel elements for nuclear reactors such as the PWR Core 2 Reactor	Zircaloy 2, 3, 4 to Zircaloy 2, 3, 4	None	20, 41
		Zircaloy 2 to Zircaloy 2	Cu, Ni, Fe (eutectic)	35, 36
		Zircaloy to UO_2	None	20
		Zircaloy to UO_2	Carbon (barrier)	20
		Zircaloy to U-Zr core	None	20
	4. Cladding uranium bearing alloys with zirconium for nuclear fuel elements.	Zr to U	None	20
		Zr to U-10Mo	"	"

TABLE 3-1. SUMMARY OF PRACTICAL APPLICATIONS OF DIFFUSION BONDING TECHNIQUES (Continued)

Technique	Application	Base Metal(s)	Intermediate Metal(s)	Reference No.
2. a. Gas Pressure Bonding (Continued)	5. Fabrication of stainless steel clad fuel elements.	Stainless to stainless	None	20
		Stainless to Zr hydride	None	20
		Stainless to UO_2	None	20
	6. Cladding of stainless 310 sheet on molybdenum and columbium sheets.	Stainless 310 to Mo	Ni (barrier)	13
		Stainless 310 to Cb	Fe (barrier)	13
	7. Cladding of tantalum with alumina for oxidation protection.	Alumina to Ta	None	20
	8. Densification of ceramic materials for fabrication of nuclear reactor fuel cores.	UO_2 to UO_2	None	20
		Al, Be, Mg oxides	None	20
		UN to UN	None	20
		UC to UC	None	20
	9. Densification of cermets.	UO_2, UN, UC, etc. in Cb, Cr, Mo, W, Re, etc.	None	20
	10. Densification of powder metallurgy products.	Be, Cr, Cb, W, Ta, Mo, Re, etc.	None	20
	11. Fabrication of prototype beryllium sheet structures with typical aerospace configurations.	Be to Be	None	20

TABLE 3-1. SUMMARY OF PRACTICAL APPLICATIONS OF DIFFUSION BONDING TECHNIQUES (Continued)

Technique	Application	Base Metal(s)	Intermediate Metal(s)	Reference No.
2. a. Gas Pressure Bonding (Cont'd)	12. Fabrication of a hypersonic wind-tunnel throat block with a beryllium-copper cover sheet and a monel block.	Be copper to monel	Au - Cu	42
		Be copper to monel	Au - Ag	42
	13. Fabrication of finned aluminum clad uranium alloy core elements for the Picqua Nuclear Power Reactor and Organic Moderated Reactor Experiment - 3 fuel reactor core loadings including more than 3,000 sq. ft. of metallurgically bonded area were produced.	Al to U-3.5Mo-.1Al	Nickel (barrier)	40
b. Die Pressure Bonding	1. Fabrication of solid state diffusion bonded honeycomb core from refractory materials.	Mo Base - TZM (Mo-.5Ti-.08Zr)	Ti	43
		Cb Base - D-36	Ti	43
		" " Cb-752	"	"
		" " B-66	"	"
		" " FS-85	"	"
		" " D-43	"	"
		Ta Base - Ta	Ti	43
		" " Ta-10W	"	"
		" " T111	"	"
	2. Fabrication of solid state diffusion bonded honeycomb core from nickel base, cobalt base and iron base high temperature alloys.	Ni Base		
		TD nickel	None	43
		Rene' 41	Cu	"
		Inconel	None	"
		Delta-Max	"	"

TABLE 3-1. SUMMARY OF PRACTICAL APPLICATIONS OF DIFFUSION BONDING TECHNIQUES (Continued)

Technique	Application	Base Metal(s)	Intermediate Metal(s)	Reference No.
2. b. Die Pressure Bonding (Cont'd)	2. Continued	Co Base		
		Haynes 25	None	43
		Iron Base		
		PH 15-7 Mo	None	43
		Stainless 300 series	"	"
		AM 350 & 355	"	"
		A 286	"	"
		Mild steel	"	"
	3. Fabrication of solid state diffusion bonded honeycomb core from titanium base and other alloys.	Ti Base		
		Ti-75A	None	43
		Ti-75A	Al	"
		RS-140	Al	"
		Copper	None	"
		U-80Pd	"	"
	4. Joining Zircaloy-2 tubing to 304 Stainless tubing for irradiation experiments.	Zircaloy-2 to 304 stainless	None	44
	5. Joining tungsten strip composites.	Tungsten to tungsten	Ni, Pd	32
	6. Joining beryllium strip components.	Beryllium to beryllium	None	45

TABLE 3-1. SUMMARY OF PRACTICAL APPLICATIONS OF DIFFUSION BONDING TECHNIQUES (Continued)

Technique		Application	Base Metal(s)	Intermediate Metal(s)	Reference No.
2. b. Die Pressure Bonding (Cont'd)	7.	Joining Nimonic 90 (Ni-Cr-Co alloy) alloy components for fabrication of turbines and turbine blades - butt joints and tapered joints.	Nimonic 90 (Ni-Cr-Co) to Nimonic 90	Ni	46
			Nimonic 90 (Ni-Cr-Co) to Nimonic 90	Cu	46
	8.	Fabrication of small cathode assemblies - overlap joints.	NVK alloy to kovar	None	29
			NVK alloy to LNM alloy	"	"
	9.	Production of rotatable elbow bend junctions, end caps and splines from steels.	2Kh13 Steel to 2Kh13 steel	None	30
			30KhGSA Steel to 30KhGSA steel	"	"
	10.	Joining of hard-metal tips to cutting tools.	Hard metals to steels	None	31
3. CREEP CONTROLLED BONDING					
Low Pressure Bonding	1.	Fabrication of solid state diffusion bonded honeycomb sandwich panels - joining of facings to honeycomb core in flat and curved panels	Cb-752 core to Cb-752 face sheets	Ti	33

TABLE 3-1. SUMMARY OF PRACTICAL APPLICATIONS OF DIFFUSION BONDING TECHNIQUES (Continued)

Technique		Application	Base Metal(s)	Intermediate Metal(s)	Reference No.
3. Low Pressure Bonding (Cont'd)	1.	Continued	Haynes 25 to Haynes 25	None	33
			Ti alloys	--	25
	2.	Fabrication of multiple heat reflection screen of TD-nickel.	TD-nickel	None	25
	3.	Joining of A-110-AT titanium components - butt joints in cylindrical bars.	A-110-AT Ti	None	47
4. TRANSIENT MELT DIFFUSION BONDING					
a. Braze Bonding or Diffusion Brazing	1.	Fabrication of fuel element sub-assemblies of stainless steel fuel tubes.	Stainless to stainless steel	Ni-P	48
	2.	Production of composite turbine blades and fastening blades to roots.	Nimonic 90	Ni	46
			Nimonic 90	Ni-Mn-Pd	"
	3.	Fabrication of thin segmented tungsten rocket nozzle liners.	W	50Cr-50Ni	37
			W	Re	49
	4.	Joining of Inconel-X plates for a heat exchanger for a nuclear application.	Inconel-X	Filler unknown	50

TABLE 3-1. SUMMARY OF PRACTICAL APPLICATIONS OF DIFFUSION BONDING TECHNIQUES (Continued)

Technique		Application	Base Metal(s)	Intermediate Metal(s)	Reference No.
4. a. Braze Bonding or Diffusion Brazing (Continued)	5.	Fabrication of a triple clad composite of molybdenum-OFHC copper-316L stainless for a missile application.	Mo to OFHC Cu to 316L stainless	Fillers unknown	50
	6.	Fabrication of a tantalum-OFHC copper composite for a heat-sink application in missile cones.	Ta to OFHC Cu	Filler unknown	50
	7.	Fabrication of various other metal composites.	Pt on stainless Ag on stainless Mo on Cu TZM on Cu Hastelloy on steel	Filler unknown " " " "	50 " " " "
	8.	Fabrication of dissimilar bi-metal channeled clad plates for applications such as hypersonic wind tunnels, etc.	A285 steel on 405S stainless Austenitic stainless on OFHC Cu	Filler unknown "	50 "
	9.	Continuous cladding of columbium on nickel for use in transportation of liquid metals at elevated temperature.	Cb on Ni	Precious metal filler	50
	10.	Production of bi-metal clad plates of titanium, zirconium and inconel on steel for chemical and nuclear applications.	Ti on steel Zr on steel Inconel on steel	Filler unknown " "	50 " "

TABLE 3-1. SUMMARY OF PRACTICAL APPLICATIONS OF DIFFUSION BONDING TECHNIQUES (Continued)

Technique		Application	Base Metal(s)	Intermediate Metal(s)	Reference No.
4. a. Braze Bonding or Diffusion Brazing (Continued)	11.	Fabrication of thermoelectric converter elements made from Pb/Te compacts with surface areas of 3" x 1" bonded to a transition stack-up of other metals - for use in SNAP 10A System.	Stack-up: Stainless steel on Cu on 62Ag-24Cu-14In on Fe on lead Telluride on Fe on 62Ag-24Cu-14In on Cu on Al	Braze fillers and diffusion barriers	40
b. Eutectic Bonding	1.	Capping the ends of aluminum cladding tubes for an organic cooled atomic reactor.	Al to Al	Ag	51
	2.	Joining of beryllium to 304L stainless steel for producing a light weight, high structural strength part.	Be to 304L stainless	Ag - .2 Li	50
	3.	Bonding of cermet valve components to metals for high temperature fluid service.	Nickel bonded carbide to Ni	None	52
	4.	Joining of zircaloy components for nuclear reactors.	Zircaloy-2	Cu, Fe, Ni, Ni-P, Mn, Si	34, 36 & 35

TABLE 3-1. SUMMARY OF PRACTICAL APPLICATIONS OF DIFFUSION BONDING TECHNIQUES (Continued)

Technique	Application	Base Metal(s)	Intermediate Metal(s)	Reference No.
4. b. Eutectic Bonding (Continued)	5. Fabrication of electronic chill panels for use in the Apollo Command Module - joining of 0.4" thick aluminum 6061 cores with narrow 1/32" wide coolant channels to 0.020" thick aluminum 5052 cover plates - surface areas of 4 ft^2.	Al 5052 to Al 6061	None	40

D. EXPERIMENTAL WORK IN DIFFUSION BONDING

The bulk of the initial experimental work (1954 to 1960) on diffusion bonding was sponsored by the Atomic Energy Commission for nuclear reactor materials. The technique utilized for these investigations was isostatic gas pressure bonding which was developed for this purpose at Battelle. The interest centered mostly on compaction and fabrication of ceramic fuel cores and cladding of these cores with metals such as molybdenum, columbium, stainless steels, zircalloys, etc. These experimental efforts led to the development of bonding conditions for fabricating flat-plate and rod-type nuclear reactor fuel elements and subassemblies. Such components are now fabricated routinely by gas pressure bonding (References 13, 20, 21, 34-36, 41, 44, 48, 52, 53).

Currently, even though work on nuclear-oriented materials continues, much of the investigative work is sponsored by the aerospace industry. As a result, refractory metal alloys, superalloys, beryllium, thoria-dispersed nickel, titanium alloys, aluminum alloys and other materials of interest for airframe and missile construction are receiving attention. The experimental investigations generally deal with joining foil or sheet gauge materials and the types of joints investigated are usually single-lap or multiple-lap. A number of intermediate materials which appear suitable on the basis of theoretical considerations are selected and evaluated by attempting to bond test specimens. The bonding equipment used for these studies varies from one investigation

to another in its details. However, it frequently consists of an evacuated bell-jar type of apparatus (Figure 3-13) where the bond pressures are provided by hydraulic cylinders and the high temperature is provided by resistance or induction heating. Variations on the above described arrangement are many. The testing and evaluation are generally based on lap shear and tensile testing of bonded specimens and metallographic examination. In some cases, peel tests are also employed. The testing may be conducted both at room temperature and some suitable elevated temperature. In a few investigations, the bonds have also been tested under thermal cycling. Evaluation of the effects of thermal cycling is carried out by mechanical testing of the bond and studying the interdiffusion through hardness measurements and other techniques such as electron micro-probe (References 17, 54-56).

A limited effort has also been conducted on the fabrication of T-joints and on production of specimens with special configurations such as honeycomb core and honeycomb sandwich specimens and rocket nozzle liners, etc. (References 32, 33, 37, 46, 49, 43).

The experimental effort has concentrated on developing bonding conditions for joining similar metals with or without the use of intermediate metals. However, several investigations have also been conducted on joining dissimilar metals to each other with or without the use of intermediate metals or barriers in the joint (References 20, 21, 13, 42, 44, 29, 30).

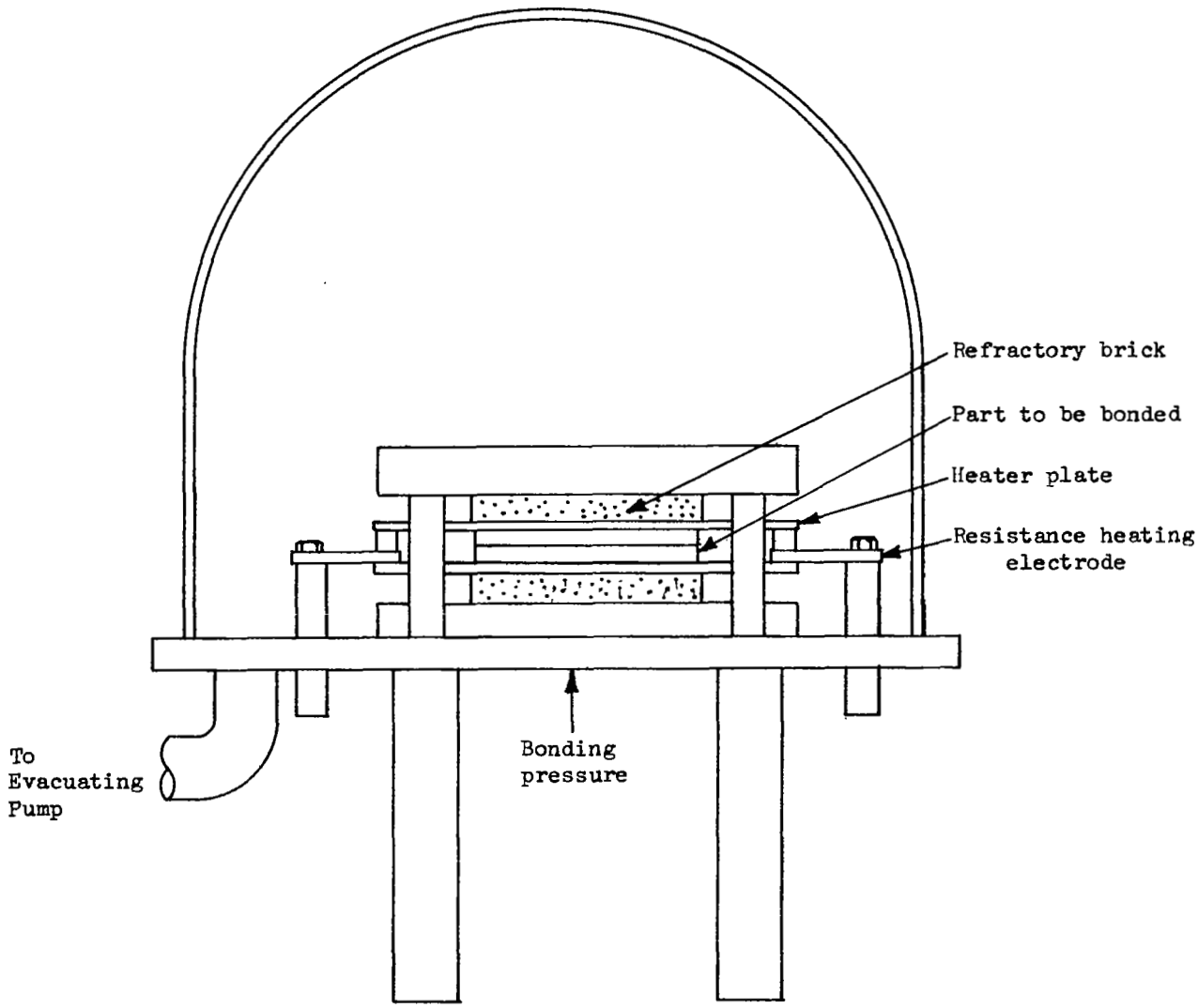

Figure 3-13. Experimental Bell-Jar Apparatus used for diffusion bonding investigations.

The available significant experimental data has been tabulated and is presented in Tables 3-2 and 3-3. Table 3-2 covers the joining of similar materials and Table 3-3 the joining of dissimilar materials. Some of the data on joining dissimilar materials has already been presented in a previous chapter under the investigation of diffusion barriers. The tables include the listing of bonding conditions wherever available and brief remarks. The sources of information for the data are listed at the end of the report and can be referred to for further details. A word of caution must be mentioned regarding the comparison of experimental data from one investigation with that of another. It has been observed that the details of testing method and evaluation of bonds vary; hence, it is difficult to make a direct comparison of different investigations. It is pointed out that much of the data of Tables 3-2 and 3-3 is preliminary.

The tabulated data serves as a guide to the experimental history and a starting point in selecting bonding conditions for a particular materials system. The specific bonding conditions will in general have to be determined by experimentation.

TABLE 3-2
SUMMARY OF EXPERIMENTAL DATA
ON DIFFUSION BONDING OF SIMILAR MATERIALS
(INDEX TO TABLE 3-2)

No.	Materials	Page No.
I	Mo-Base	104
II	Cb-Base	107
III	Ta-Base	110
IV	W-Base	112
V	Ni-Base	113
VI	Ti-Base	116
VII	Be-Base	117
VIII	Cu-Base	117
IX	Co-Base	118
X	Al-Base	119
XI	Fe-Base	120
XII	U-Pd Alloy	122
XIII	Zr-Base	122

Materials Joined	Intermediate Material	Bonding Conditions: Pressure (ksi)	Temp. (°Fx10²)	Time (Min.)	Atmos.	Remarks	Reference No.
I. Mo-Base							
Mo	None	10 (Isostatic)	23-26	180	Inert gas	Intimate contact and 5% grain growth at 2300°F to 95% grain growth at 2600°F.	21
Mo-.5Ti	None	"	23-26	180	Inert gas	Intimate contact and 5% grain growth at 2300°F to 95% grain growth at 2600°F.	21
Mo	Ti foil	10	17	120	Argon	Satisfactory bonds.	20
Mo	Ti foil & film	12.5	16	10	Vacuum	Satisfactory bonds.	43
Mo	Ta (.002" thick)	--	18.5	--	Argon	Satisfactory bonds.	39
Mo	Ni foil	10	16	10	Vacuum	Satisfactory bonds.	43
TZM	None	12	25	1	Argon	Preliminary bonding conditions.	25
TZM	.001" Ti	10	19-22	.3-.7	Argon	Poor bond strengths due to delamination in TZM.	54
TZM	Ti foil & film	5-16	14-20	1-60	Vacuum	Bond strength highly dependent on TZM quality. Delaminating tendency of TZM is detrimental.	43
TZM	Ti	.7	20	180	Vacuum	Preliminary results. Good bond.	33

Materials Joined	Intermediate Material	Bonding Conditions Pressure (ksi)	Temp. ($°F x 10^2$)	Time (Min.)	Atmos.	Remarks	Reference No.
I. Mo-Base							
TZM	Ti (.001" thick)	10	18	.5	Argon	Bonding feasible.	17
TZM	Ti	12	14.25	1	Argon	Preliminary results.	25
TZM	Ta (.001" thick)	12	24-28	.3	Argon	Bonding feasible.	56
TZM	Ta	12	21.8	1	Argon	Preliminary results.	25
TZM	Ni foil	.7	20	180	Vacuum	Preliminary results.	33
TZM	Ni film	20	20	1	Argon	Loss in bond strength on diffusion annealing.	55
TZM	Zr foil	5-10	16-18	10-60	Vacuum	No bonding observed.	43
TZM	Zr	.7	20	180	Vacuum	No bonding observed.	33
TZM	Pt, Pt-Rh	5-10	18	10-60	Vacuum	Strong bonds.	43
TZM	Pt film	20	20	1	Argon	Pt film not too effective an aid to diffusion.	55
TZM	V foil	5-10	16-20	10-60	Vacuum	No bonding observed.	43
TZM	V	12	17	.3	Argon	Great loss of bond strength on subsequent diffusion anneal.	17
TZM	V	12	16	1	Argon	Preliminary results.	25

Materials Joined	Intermediate Material	Bonding Conditions: Pressure (ksi)	Temp. ($°F x 10^2$)	Time (Min.)	Atmos.	Remarks	Reference No.
I. Mo-Base							
TZM	Pd	.7	20	180	Vacuum	Preliminary results. Good bonding.	33
TZM	Pd film	20	20	1	Argon	Very good bonds. High strength increase on diffusion annealing.	55
TZM	Cr	.7	20	180	Vacuum	No bonding.	33
TZM	Cr	20	20	1	Argon	No bonding.	55
TZM	Fe	.7	20	180	Vacuum	Fair bond. Preliminary results.	33
TZM	Monel	.7	20	180	Vacuum	Void free bond.	33
TZM	Rh film	20	20	1	Argon	Loss of bond strength on annealing.	55
TZM	Ru film	20	20	1	Argon	Drastic loss of bond strength on annealing.	55
TZM	Re film	20	20	1	Argon	No bonding.	55
TZM	Cb foil	10	26	.5	Argon	Good bonds even after annealing. However, Cb promotes recrystallization of TZM.	17
TZM	Cb	12	19	1	Argon	Preliminary results.	25
TZM	Cb (.0005" - .002" thick)	10	26	.33	Argon	Variations in bond strengths due to delaminations in TZM.	54

Materials Joined	Intermediate Material	Bonding Conditions Pressure (ksi)	Temp. (°Fx10²)	Time (Min.)	Atmos.	Remarks	Reference No.
I. Mo-Base							
TZM	Mo	10	26	.5	Argon	Inconsistent results.	17
II. Cb-Base							
Cb	None	10 (Isostatic)	21-24	180	Inert Gas	Intimate contact. Complete grain growth.	21
Cb	Zr	"	15.4	240	Argon	Satisfactory bonds.	20
Cb	Mg plating	.1-.2	20-22.3	60-240	Vacuum	No appreciable bonding. Mechanically weak.	57
Cb	Cu plating	"	"	"	"	"	"
Cb	Ag plating	"	"	"	"	"	"
Cb	Zn plating	"	"	"	"	"	"
Cb	Mo plating	"	"	"	"	"	"
Cb	Co plating	"	"	"	"	"	"
Cb	Ti plating	"	"	"	"	"	"
Cb	In plating	.130	20	60	Vacuum	Very good. Mechanically strong bond.	"

Materials Joined	Intermediate Material	Bonding Conditions: Pressure (ksi)	Temp. ($^{o}F x 10^2$)	Time (Min.)	Atmos.	Remarks	Reference No.
II. Cb-Base							
Cb	In plating on Ni plating	.130	20	60	Vacuum	Very good. Mechanically strong bond.	57
B-66	None	10-20	22-26	.3-1	Argon	Satisfactory bonds. Better bonds above 2500°F.	56
B-66	Ti foil	10	14	10	Vacuum	Highly satisfactory bonds.	43
B-66	V foil	10	26	.3	Argon	Good bonds but not as strong as self-bonds.	56
B-66	Ta	12	26	.3	Argon	Good bonds. No ill effects of diffusion anneal.	56
B-66	Ta (.0003" thick)	10	26	.3-.7	Argon	Good bonds. Parent metal failures in peel testing.	54
D-43	None	30	25	1	Argon	Good peel strengths with the high bonding pressures.	56
D-43	None	40	24	1	Argon	"	56
D-43	Ti foil	10	14	10	Vacuum	Highly satisfactory bonds.	43
D-43	V (.001" thick)	12	24.5	.3	Argon	" " "	56
D-43	Ta foil	10	25-26	.3	Argon	Fair bonds.	55
D-36	None	12	24-26	.3	Argon	Best results at 2450°F, 12,000 psi and 18 seconds.	56

Materials Joined	Intermediate Material	Bonding Conditions: Pressure (ksi)	Temp. (°Fx10²)	Time (Min.)	Atmos.	Remarks	Reference No.
II. Cb-Base							
D-36	Ti foil	5	14	10	Vacuum	Strong bonds.	43
D-36	Ti film	10	14	10	"	" "	43
D-36	Ti foil	10	22	.3	Argon	" "	55
D-36	Ti foil & film	.7	17-20	180	Vacuum	" "	33
D-36	Zr foil	5	14	10	"	Fair bonds.	43
D-36	Zr foil	.7	20	180	"	Good bonding, but voids in Zr interleaf.	33
D-36	Zr-4.5 Cr	1-5	20-22	1	Argon	Very strong bonds. Solidus temperature of Zr-4.5 Cr with Cb is 2370°F.	56
D-36	Ni	.7	20	180	Vacuum	Nearly void free bond. Some eutectic melting.	33
D-36	V foil	.7	20	180	Vacuum	Cracks between interleaf & D-36.	33
D-36	Cr	.7	20	180	"	No bonding.	33
D-36	Ta (.001" thick)	10	24	.33	Argon	Good T-joints made, but not as good as with Ti.	55
B-33	None	10	22-24	.30	"	Good bonds. Best results at 2400°F.	55

Materials Joined	Intermediate Material	Bonding Conditions: Pressure (ksi)	Temp. ($^{o}F x 10^{2}$)	Time (min.)	Atmos.	Remarks	Reference No.
II. Cb-Base							
B-33	Cb (.001" thick)	5	20	1	Argon	Fair bond. Preliminary result.	56
Cb-752	Ti foil	5	14.5	10	Vacuum	Strong bonds.	43
Cb-752	Ti film	12.5	14.5	10	Vacuum	" "	"
Cb-752	Ti (.0005" thick)	.7	22	360	Vacuum	Fair core-to-facing bonds in honeycomb sandwich panels.	33
FS-85	Ti foil	10	14	10	Vacuum	Very good bonds.	43
III. Ta-Base							
Ta	None	10 (Isostatic)	24-26	180	Inert Gas	Satisfactory bonds.	20
Ta	None	20	20.5	.16	Argon	Yield-stress controlled bonding.	25
Ta	None	10	23.5	180	Argon	Diffusion controlled bonding.	25
Ta	None	10	18-24	10	Vacuum	Preliminary results.	43
Ta	Ti foil	10	16	10	Vacuum	Good bonds.	43
Ta	Zr	--	16	-	--	Preliminary results.	20

Materials Joined	Intermediate Material	Bonding Conditions: Pressure (ksi)	Temp. ($^{\circ}F \times 10^2$)	Time (Min.)	Atmos.	Remarks	Reference No.
III. Ta-Base							
T111	None	10	24-28	.3	Argon	Unsatisfactory bonds.	55
T111	Ti-Ta-Ti film composite	25	15-16	1	Argon	Good as bonded strength, but weakening on diffusion anneal.	56
T111	Ti foil	10	16	10	Vacuum	Good bonding.	43
T111	Ta foil	10-40	22-26	1	Argon	Very good bonds. No weakening on anneal.	55
T111	V (.001" thick)	12	26	.33	Argon	Very good bond strengths.	56
T111	Cb (.001" thick)	20	22	1	Argon	Very good as bonded strengths. Strength increase on diffusion annealing.	55
T111	W (.001" thick)	20	22	1	Argon	Very weak bonds.	55
Ta-10W	Ti film	10	17-18	10	Vacuum	Marginal bonding.	43
Ta-10W	Ta foil	10-20	26	.3	Argon	Good bond strengths. Strength increase on annealing.	17
Ta-10W	(.0003"-.002") Ta	20	26	.33	Argon	Very strong bonds obtained.	54
Ta-10W	V	10-20	26	.3	Argon	Poor bonds. No improvement on annealing.	17
Ta-10W	Cb (.0005" thick)	10	26	.3	Argon	Very good bond strength. Significant strength increase on annealing.	17

Materials Joined	Intermediate Material	Bonding Conditions: Pressure (ksi)	Temp. ($^{\circ}F \times 10^2$)	Time (Min.)	Atmos.	Remarks	Reference No.
IV. W-Base							
W	None	10 (Isostatic)	28	180	Inert Gas	Preliminary results.	20, 25
W	Ni, Pd films	≈10	18	90	Purified Hydrogen	High remelt temperature joints. No base metal cracking.	32
W	" " "	≈10	20	15	"	" " "	"
W	Ni, Re, Cr, Pt, electroplates	20	18.5	30	--	Good bonds judged by testing at 4150°F under a 540 psi load on a fail-no fail basis.	49
W	Re-Ta, Re-Cb plated composites	20	18.5	30	--	Good high remelt bonds.	49
W	Ta, Mo, Cb, V, Zr, Ti	20	18.5	30	--	Poor bonds.	49
W	Ni filler	.004-.016	27	1	Vacuum	Brazing followed by six hour diffusion treatment at 2200°F gave low remelt bonds.	37
W	50Cr-50Ni filler	"	25	30	Vacuum	Diffusion brazing at 2500°F gave consistent bonds with remelts above 5000°F.	37

Materials Joined	Intermediate Material	Bonding Conditions: Pressure (ksi)	Temp. (°Fx10²)	Time (Min.)	Atmos.	Remarks	Reference No.
IV. W-Base							
W	Ni: Ta: Ni foil	.004-.016	27	1	Vacuum	.002" thick Ta and .001" Ni foils used for diffusion brazing followed by diffusion treatment of 6 hours at 2400°F gave inconsistent results and low remelts.	37
W	62Pd-38Cr filler	.004-.016	26	1	Vacuum	Brazing followed by 6 hours diffusion at 1800-2200°F gave remelt temperatures around 4000°F.	"
W	Pt-B filler	--	16	--	--	Reactive brazing at 1575°F gives remelt temperatures above 4400°F due to chemical reaction: $Pt\text{-}B + W \rightarrow Pt(W) + W_2B$ Melting Points: 1575°F; 4460°F at 60% W solid solution; 5020°F	58
V. Ni Base							
TD Ni	None	3	10	10	Vacuum	Partial bonding.	43
TD Ni	None	.0132	22	60	Vacuum	Fair bond.	75
TD Ni	None	9	20	90	Vacuum	Very strong bond.	75
TD Ni	None	24	16	.3	Argon	Excellent bonds.	56

Materials Joined	Intermediate Material	Bonding Conditions: Pressure (ksi)	Temp. (°Fx10²)	Time (Min.)	Atmos.	Remarks	Reference No.
V. Ni Base							
TD Ni	None	12	20	.3	Argon	Excellent bonds.	56
TD Ni	Pt electroplate	10	20	.5	"	Good bonds, but slight strength loss on anneal.	17
TD Ni	Pt (.0015" thick)	10	20	.3	"	Good bonds, but slight strength loss on anneal.	17
TD Ni	Pd electroplate	10	20	.5	"	Good bonds, but drastic strength loss on anneal at 2350°F.	17
TD Ni	Pd (.0017" thick)	10	20	.3	"	Strength loss on anneal due to voids in TD Ni.	17
TD Ni	60Pd-40Ni foil	10	21	.3	"	Good bonds. High strength increase on anneal. No voids.	17&54
TD Ni	Au electroplate	10	20	.35	"	Good bonds but reduction to zero strength on 2350°F anneal.	17
TD Ni	Ni plate	.0132	23	60	Vacuum	Fair bond.	75
TD Ni	Ni electroplate	10	20	.35	Argon	Fair bond.	17
TD Ni	Ni (.00025" thick)	10	20	.35	"	Good bond but strength loss on 2350°F anneal.	17
TD Ni	Ni (.001" thick)	10	20	.35	"	Good bond. Strength increase on 2350°F anneal.	17

Materials Joined	Intermediate Material	Bonding Conditions: Pressure (ksi)	Temp. (°Fx10²)	Time (Min.)	Atmos.	Remarks	Reference No.
V. Ni Base							
TD Ni	Ni (.001" thick)	.0132	23	600	Vacuum	Good bond. Base metal failure on testing.	75
TD Ni	Ni (.001" thick)	9	20	45	"	Very strong bond. Base metal failure on testing.	75
TD Ni	ZrB_2	.0132	23	60	"	Good bond.	75
TD Ni	Mo (.001" thick)	.0132	23	60	"	Good bond.	75
TD Ni	Ti vapor deposit	.0132	23	60	"	No bond.	75
TD Ni	Al vapor deposit	.0132	23	60	"	No bond.	75
TD Ni	Cu	3-5	9-13	10	"	No bond.	43
Rene' 41	None	.5-1	21-23	10	"	No bonding.	43
Rene' 41	Cu foil	5	16	10	"	Excellent bonds.	43
Inconel	None	.5	20-21	10	"	Strong bonds.	43
Delta max (50Ni-50Fe)	None	4.4	11	10	"	Satisfactory bonds.	43
Nimonic 90	Ni foil & film	--	20	1200	--	Hot pressing followed by diffusion at 2000°F for 20 hours. Strong bonds.	46

Materials Joined	Intermediate Material	Bonding Conditions: Pressure (ksi)	Temp. (°Fx10²)	Time (Min.)	Atmos.	Remarks	Reference No.
V. Ni-Base							
Nimonic 90	Ni-Mn-Pd filler	4.5	21.5	2	--	Pressure brazed at 2150°F followed by diffusion at 2000°F for 20 hours. Strong bonds.	46
Ni*	None	2.1	18.3	10	Vacuum $5x10^{-5}$ mm Hg	Satisfactory bonds with machined surfaces. [* Russian data]	29
VI. Ti-Base							
Ti (75A)	None	4-10	13	10	Vacuum	Satisfactory bonds.	43
Ti (75A)	None	10 (Isostatic)	16	240	Inert gas	Preliminary results.	20
Ti (75A)	Ag foil	2-10	10-14	10	Vacuum	Strong bonds but too high bonding temperature.	43
Ti (75A)	Al foil	10	10.5	10	"	Strong bonds.	43
Ti (75A)	Ni	Slight	17.5-18	Long	"	Eutectic bonding giving good bond.	59
A-110AT	None	Slight	18.5	60	"	Excellent bonds with base metal strengths.	47
A-110AT	Ag filler	Slight	18.5	60	"	Excellent diffusion brazed joints.	47
B-120VCA	None	Low	16-17	600-720	"	Creep controlled bonding. Preliminary results.	25
RS 140	Al foil	10	11	10	"	Very strong bonds.	43

Materials Joined	Intermediate Material	Bonding Conditions: Pressure (ksi)	Temp. ($^{o}F x 10^{2}$)	Time (Min.)	Atmos.	Remarks	Reference No.
VI. Ti-Base							
VTI*	None	1	15.6	15	Vacuum $5x10^{-5}$mm Hg	Satisfactory bonds with machined surfaces. [* Russian material designations]	29
VII. Be-Base							
Be	None	--	17.5-19	60	Vacuum	Very good bonds. Pressure through differential expansion by heating in a Moly-vise.	45
Be	None	10 (Isostatic)	15-16.5	240	Inert Gas	Good bonds.	20
Be	Ag foil	10	13	10	Vacuum	Strong bonds.	43
Be	Ag	--	17	--	Vacuum	Eutectic bonding to give good bonds.	50
Be	Al foil	5	11	10	Vacuum	Strong bonds.	43
VIII. Cu-Base							
Cu	None	.5	16	10	Air	Highly satisfactory bonds.	43
Cu	None	5	10	10	Vacuum	Satisfactory bonds.	43
Cu	None	24	4	1	Hydrogen	Complete contact. Good bonds.	10

Materials Joined	Intermediate Material	Bonding Conditions Pressure (ksi)	Temp. (°Fx10²)	Time (Min.)	Atmos.	Remarks	Reference No.
VIII. Cu-Base							
Cu	None	20.3	6	1	Hydrogen	Complete contact. Good bonds.	10
Cu	None	17	7	1	"	Complete contact. Good bonds.	10
Cu	None	14	8	1	"	Complete contact. Good bonds.	10
Cu	None	12	10	1	"	Complete contact. Good bonds.	10
Cu	Zr	2-10	5-7	10	Vacuum	No bonding.	43
Beryllium Cu	63Ag-27Cu-10In alloy	.006	14.75	30	Vacuum, Hydrogen	Strong diffusion brazed joints.	60
Be-Cu	Au filler	.006	14.75-15.5	30	"	Good diffusion brazed joints but not as strong as with Ag-Cu-In filler.	60
MB Copper*	None	1	15.6	20	Vacuum 5x10-5 mm Hg	Satisfactory bonds with machined surfaces. [*Russian material designations]	29
IX. Co-Base							
Haynes 25	None	.5	21	10	Vacuum	Good bonds.	43
Haynes 25	None	.7	20	180	"	Satisfactory bonds. Diffusion across interface complete.	33

Materials Joined	Intermediate Material	Bonding Conditions Pressure (ksi)	Temp. (°Fx10²)	Time (Min.)	Atmos.	Remarks	Reference No.
IX. Co-Base							
Haynes 25	None	.08	22	180	Vacuum	Bonds with some interfacial voids.	33
Haynes 25	Be transport alloys with Ni, Mn, Cr, Fe	Low	19.5-21	1/2-5	"	Strong bonds. Beryllium is a good "primary" diffuser for Co-base alloys.	61
Haynes 25	Ni (.0015" thick)	.7	20	180	"	Void free bonds.	33
Haynes 25	"	.46	20	600	"	Voids in bond.	33
Haynes 25	Pd (.0008" thick)	.46	20	600	"	Void free strong bonds.	33
Haynes 25	Pd (.0018" thick)	.7	20	180	"	Void free strong bonds.	33
Haynes 25	Pd (.002" thick)	.08	22	180	"	Void free bonds.	33
X. Al-Base							
Al 5052	Ag	.01-.03	10.5	5	"	Strong eutectic bond. Preliminary results.	43
Al	Ni, Cu, Fe films	--	--	--	--	Bonding feasible.	62

Materials Joined	Intermediate Material	Bonding Conditions: Pressure (ksi)	Temp. ($°F x 10^2$)	Time (Min.)	Atmos.	Remarks	Reference No.
X. Al-Base							
Al	Si	1-2	10.5-11.1	1	Vacuum	Eutectic bonding under pressure giving strong bonds with no residual low remelt area in joint.	53
AMtS*	None	0.7	11	20	Vacuum $5x10^{-5}$ mm Hg	Satisfactory bonding with machined surfaces. [*Russian material designations.]	29
XI. Fe-Base							
2Kh13 steel*	None	2.25	17.2-17.5	10	Vacuum 10^{-3} mm Hg	Excellent bonds in elbow bend specimens. No damage to bond microstructure even after extensive pressure cycling and vibration testing. [*Russian desig.]	30
30KhGSA steel*	None	2.25	17-17.2	10	"	Welding of end cap specimens. Excellent bonds without any distortions. [*Russian material designations.]	30
Grade 20 steel*	None	2.1	17	10	"	Welding of splines without distortion. [*Russian material designation.]	30
N29K18* (Kovar)	None	2.8	20	25	Vacuum $5x10^{-5}$ mm Hg	Satisfactory bonds with machined surfaces. [*Russian material designations]	29

Materials Joined	Intermediate Material	Bonding Conditions: Pressure (ksi)	Temp. (°F x10²)	Time (Min.)	Atmos.	Remarks	Reference No.
XI. Fe-Base							
Mild steel	None	.5	20	10	Vacuum	Satisfactory bonds.	43
300 stainless series	None	.5	20.5	10	"	Satisfactory bonds.	43
300 stainless series	None	10 (Isostatic)	21	180	Inert gas	Satisfactory bonds.	20
A286	None	.5	22	10	Vacuum	Satisfactory bonds.	43
AM-350	None	.5	20.5	10	Vacuum	Satisfactory bonds.	43
AM-355	None	.5	20.5	10	Vacuum	Satisfactory bonds.	43
PH15-7Mo	None	.5	20.5	10-30	Vacuum	Satisfactory bonds.	43
PH15-7Mo	Ni, Pd, HS-25	--	--	--	Vacuum	Bonding feasible.	43
Stainless	Ni-P plating	--	18.75	60	Dry hydrogen	Diffusion brazing to get good ductile bonds.	48
Steel EI69*	None	.51	18.3	10	Vacuum	Very strong bonds obtained. [*Russian material designation]	31
Steel 45*	None	.51	18.3	10	"	" "	31
Cast iron	None	.51	14.7	10	"	" "	31

Materials Joined	Intermediate Material	Bonding Conditions: Pressure (ksi)	Temp. (°Fx10²)	Time (Min.)	Atmos.	Remarks	Reference No.
XII. U-Pd Alloy							
U-80 Pd	None	4	11-12	10	Vacuum	Good bonds. Preliminary results.	43
XIII. Zr-Base							
Zr	None	10 (Isostatic)	15.5	180-240	Inert gas	Strong bonds. Best bonds with belt abraded surfaces.	20
Zircaloy-3	"	"	"	"	"	" "	"
Zircaloy-4	"	"	"	"	"	" "	"
Zircaloy-4	"	"	15.5-16.25	240	"	" "	41
Zircaloy-2	"	"	15.5	180-240	"	" "	20
Zircaloy-2	Cu powder	--	17.2	2	Vacuum	Good eutectic bonds.	34
Zircaloy-2	Cu plate (.0001" thick)	.03	19	30-120	Helium	" " "	35
Zircaloy-2	Cu (.00015"-.00025" thick)	.015-.03	18.3	Min. to Hrs.	Inert gas	Excellent eutectic bonds.	36
Zircaloy-2	Ni powder	--	18.5	2	Vacuum	Good eutectic bonds.	34

Materials Joined	Intermediate Material	Bonding Conditions: Pressure (ksi)	Temp. ($^{o}F x 10^{2}$)	Time (Min.)	Atmos.	Remarks	Reference No.
XIII. Zr-Base							
Zircaloy-2	Ni (.00015"-.00025" thick)	.015-.030	18.3	Min. to Hrs.	Inert gas	Excellent eutectic bonds.	36
Zircaloy-2	Ni-P powder	--	17.2	2	Vacuum	Good eutectic bonds.	34
Zircaloy-2	Si powder	--	25.6	2	"	" " "	34
Zircaloy-2	Mn powder	--	21.6	2	"	" " "	34
Zircaloy-2	Fe (.0001"-.0003" thick)	.03	16.5-18.5	30-180	Helium	Undependable bonds with voids.	35
Zircaloy-2	Fe (.00015" - .00025" thick)	.015-.030	18.3	Min. to Hrs.	Inert gas	Excellent eutectic bonds.	36

TABLE 3-3

SUMMARY OF EXPERIMENTAL DATA
ON DIFFUSION BONDING OF DISSIMILAR MATERIALS

(INDEX TO TABLE 3-3)

No.	Materials	Page No.
I	Fe-Base to Hard Metals	125
II	Cu-Base to Other Metals	125
III	Stainless Steels to Other Metals	126
IV	Al-Base to Other Metals	127
V	Ceramics to Metals	128
VI	U-Base to Zr	129
VII	Zircaloy to Stainless	129

Materials Joined	Intermediate Material	Bonding Conditions: Pressure (ksi)	Temp. ($^{o}F x 10^{2}$)	Time (Min.)	Atmos.	Remarks	Reference No.
I. Hard Metals to Fe-base							
79W15Ti6Co* -Steel 45*	None	.51	14.7	10	Vacuum	Satisfactory bonds obtained.	31
79W15Ti6Co* -Steel EI69*	"	.51	18.3	10	"	" " "	31
34W60Ti6Co* -Steel 45*	"	.51	14.7	10	"	" " "	31
II. Copper to Other Metals							
MB Copper-VTI* (Ti alloy)	None	.7	15.6	15	Vacuum $5x10^{-5}$ mm Hg	Satisfactory bonds with machined surfaces.	29
MB Copper-ATts alloy* (Al alloy)	"	1	9.5	15	"	Same as above.	29
MB Copper-N29K18* (Kovar)	"	1	17.4	10	"	Same as above.	29

*Russian material designations.

Materials Joined	Intermediate Material	Bonding Conditions: Pressure (ksi)	Temp. ($^{o}F x 10^{2}$)	Time (Min.)	Atmos.	Remarks	Reference No.
II. Copper to Other Metals							
Cu to Cb-1Zr	None	--	18	240	Vacuum	Good bond. Failure in copper during testing.	76
Cu to 316 Stainless	None	--	18	120	Vacuum	Same as above.	76
Be-Cu to Monel	Au-Cu, Au-Ag electro-plates	1.5-6 (Isostatic)	6.5	180	Helium or nitrogen	Good bond strengths and satisfactory diffusion.	42
Be-Cu to Monel	Au-Pb, Au-Al electro-plates	"	"	"	"	Brittle bonds.	42
III. Stainless to Others							
Stainless 310 to Moly	Ni (barrier)	--	--	--	--	Bonding feasible with good mechanical properties and minimum intermetallics.	13
Stainless 310 to Cb	Fe (barrier)	--	--	--	--	Same as above.	13

Materials Joined	Intermediate Material	Bonding Conditions: Pressure (ksi)	Temp. ($^{\circ}F \times 10^2$)	Time (Min.)	Atmos.	Remarks	Reference No.
III. Stainless to Others							
Stainless 316 to Cb-1Zr	None	--	18	240	Vacuum	Low strength, bond failure due to intermetallic formation.	76
IV. Al to Others							
Al to Cu	None	40	8.8	4	Vacuum	Good bonding.	63
Al to Cu	None	22	10	4	Vacuum	Good bonding.	63
Al to Zr	None	22-50	10	15	Vacuum	Bond strengths increased with increasing pressure but decreased with increasing temperature beyond 1000°F.	63
Al to Ni	None	22-52	9.3	4	Vacuum	Good bonds. Intermetallic formation decreased with increasing pressure and was completely eliminated at 52,000 psi.	64
Al to U	Ni plate	5	9	--	--	Uranium plated with Ni layer and bonded successfully to aluminum.	65

Materials Joined	Intermediate Material	Bonding Conditions Pressure (ksi)	Temp. (°Fx10²)	Time (Min.)	Atmos.	Remarks	Reference No.
V. Ceramics to Metals							
Nickel bonded Carbide to Ni	None	--	24.5	10	Inert gas	Good eutectic bonds.	52
Alumina to Ta	None	10 (Isostatic)	28	120	Inert gas	Satisfactory bonds obtained.	20
UO_2 to Zircaloy	None	"	15.5	240	Inert gas	" " "	20
UO_2 to Zircaloy	Carbon (Barrier)	"	15.5	240	Inert gas	Mechanically strong bond. No interaction between Zircaloy and UO_2.	20
UO_2 to Cb	None	"	21	180	Inert gas	Good bonds obtained.	20
UO_2 to Stainless	None	"	21	180	Inert gas	" " "	20
U-Zr to Zircaloy 2	None	"	15.5	300	Inert gas	" " "	20
UC to Cb	None	"	21-24	180	Inert gas	Good bonds obtained. A narrow diffusion zone at interface.	21

Materials Joined	Intermediate Material	Pressure (ksi)	Temp. ($^{\circ}F x 10^2$)	Time (Min.)	Atmos.	Remarks	Reference No.
VI. Zr to U base							
Zr to U	None	2.2 (Isostatic)	15.5	2160	Inert gas	Good bonds obtained.	20
Zr to U-10Mo	None	10 (Isostatic)	12	360	"	" " "	20
VII. Zircaloy to Stainless							
Zircaloy-2 to 302 Stainless	None	--	187	80	Vacuum	Pressure applied through differential expansion. Good bonds obtained.	44
Zircaloy-2 to 302 Stainless	None	--	187	3	Helium	Same as above.	44

E. SUMMARY

The current applications of diffusion bonding focus on the joining of materials and structures which are difficult to join by fusion welding. These materials include alloys whose properties depend on thermally metastable phases; dispersion hardened composite materials; brittle materials; and materials which suffer loss of properties on recrystallization. The process has been used for fabrication of nuclear fuel elements and small electronic components, and its feasibility for large expandable structures such as honeycomb sandwich panels has been demonstrated. Diffusion bonding is well suited for fabricating structures from sheet and foil materials, primarily in lap joint configurations. Fusion welding and brazing encounter difficulties in joining thin gauge materials.

The diffusion bonding techniques are broadly divided into four classes, viz. yield stress controlled bonding; diffusion controlled bonding; creep controlled bonding; and transient melt diffusion bonding. These definitions are based on the variations of the parameters--pressure, time and temperature. These classifications are flexible and changes of the bonding parameters can change the technique being used.

The gas pressure bonding method is used most extensively and is routinely employed in the nuclear reactor industry for producing flat-plate and rod-type fuel elements and subassemblies. The feasibility of employing gas pressure bonding for fabricating various other complex structures has also been reported.

Low pressure bonding has been utilized for fabrication of large (2' x 3') prototype refractory metal and superalloy honeycomb sandwich panels.

Transient melt diffusion bonding techniques are generally used to enable the joining to take place at low temperatures and pressures, with subsequent diffusion to provide higher remelt properties (e.g. tungsten rocket liners and clad composites).

Die pressure bonding has found application for joining small components. One of its major uses has been fabricating diffusion bonded honeycomb core which can be expanded into large panel sizes. The pressure welding technique has been employed for joining steel pipes and aluminum-to-copper bimetallic joints.

Considerable experimental work has been conducted on the diffusion bonding of various materials. The emphasis has shifted from the nuclear-reactor oriented materials to the materials of interest to the aerospace field. As a result, diffusion bonding investigations have been conducted and are continuing on the joining of refractory metals and their alloys, superalloys, titanium alloys, beryllium, thoria-dispersed nickel, etc. A limited amount of work is also being conducted on the joining of dissimilar materials. There is widespread use of intermediate materials for aiding the diffusion bonding process, and consideration of diffusion barrier materials for the joining of incompatible dissimilar materials has been made in some cases. These efforts have led to the recognition of certain favorable joint systems; however, clearer fundamental

guidelines are needed to select reliable material systems in all cases.

The experimental work has centered on the bonding of thin gauge materials in lap joint configuration. Limited attention has been directed toward fabrication of T-joints and other specialized joint configurations.

The evaluation of diffusion bonded joints is conducted by metallographic examination, shear peel and tensile tests. Comprehensive thermal shock testing, interdiffusional studies and standardized testing procedures seem to be lacking.

It is evident that the transition from laboratory feasibility to hardware application requires a careful consideration of the fundamentals of diffusion bonding for each application.

CHAPTER 4. APPLICATION OF DIFFUSION BONDING

A. INTRODUCTION

The purpose of this chapter is to suggest methods and direction of investigative work that are necessary for broadening applications of diffusion bonding.

This diffusion bonding study has covered many applications, most of which have been in the nuclear engineering field. The processes that have been used most are gas pressure bonding and roll bonding. To a more limited extent, we have seen some application of diffusion bonding in the aerospace industry. Examples are diffusion bonded honeycomb, electronic chill panels, cryogenic plumbing and specialized clad composites. We have, furthermore, seen that investigative work has covered a rather wide range of engineering materials.

It has become evident that a better understanding of certain requirements for diffusion bonding is needed before broader application will be realized. The relevant factors regarding the selection of diffusion bonding as a joining technique and the need for development will be discussed in this chapter.

B. PRESENTATION

It is felt that the proper utilization of diffusion bonding will be best served by a better appreciation of its advantages, limitations and basic requirements. The goal of this chapter is to present a logical

framework for the consideration of diffusion bonding as a joining technique. In prior chapters we have indicated the basic fundamentals and recorded a rather large amount of experimental work. When viewing the experimental work, it is evident that in terms of the overall diffusion bonding requirements, the work is oftentimes inconclusive. Therefore, specific areas for development have been delineated.

C. BONDING REQUIREMENTS

It must be emphasized that the bonding requirements for one combination of materials may not necessarily be applicable to another materials system even in cases where the materials involved have highly similar characteristics. Each materials system needs to be considered individually in regard to bonding requirements. The logic and reasoning follows the guidelines set in Chapter 2 on "Diffusion Bonding Fundamentals". However, the understanding of the mechanism of diffusion bonding is not such as to allow the specification of the bonding requirements directly from an observation of the material properties. The material characteristics can be relied upon to furnish a starting point in the selection of the bonding conditions, but generally some amount of investigative work is to be anticipated. Consideration of the joint configurations involved is necessary. The magnitude of an investigative effort will depend on the materials system, joint configuration and prior joining information.

D. DIFFUSION BONDING FORMAT

This is a guide to be used in considering the use of diffusion bonding for a particular joining application. The format is presented in tabular form (Table 4-1). The four classes of techniques previously defined are listed with relevant comments in regard to the bonding parameters.[25]

This table is intentionally brief to facilitate its use. It is based upon the fundamentals of diffusion bonding as discussed in Chapter 2.

It is recognized that the distinction between techniques is somewhat arbitrary. However, by using these definitions, there is a logical basis for discussion and interpretation of the investigative work.

A conceptual representation of the format is shown in Figure 4-1.[66] The pressures are based on the yield stress of the materials at the bonding temperature. It is evident that at a constant pressure, techniques I, II or III can be applied by varying the temperature. The lower curve in Figure 4-1 reflects the fact that the intermediate foils usually possess lower yield strengths than the base metals.

Transient melt bonding is a special case wherein the liquid phase in the interface eliminates the need for surface deformation. Normally only contact pressure is required to hold the parts together.

Using this format, one or more techniques that have potential for a given combination of materials and joint configuration can be selected. The available bonding equipment and the particular component geometry will influence the choice of the technique.

TABLE 4-1. FORMAT OF DIFFUSION BONDING TECHNIQUES

Factor	I. Yield-Stress Controlled Bonding	II. Diffusion Controlled Bonding	III. Creep Controlled Bonding	IV. Transient-Melt Diffusion Bonding
1. Pressure	Above yield-stress of one of the components at bonding temperature.	From approximately 0.7 to the yield stress at bonding temperature.	From a few psi to approximately 0.7 of the yield stress.	Normally 1 to 15 psi or higher if it is desired to minimize the amount of liquid by extrusion during joining.
2. Temperature	High enough to lower the yield-stress.	Usually above 0.5 times the melting temperature of one of the components.	Usually above 0.5 times the melting temperature of one of the components.	Above the lowest liquidus temperature.
3. Time	Short, of the order of seconds or minutes.	Generally several hours.	Long times on the order of 24 hours or more.	Minutes to form a bond through the liquid phase; perhaps many hours of diffusion to produce a higher remelt temperature.
4. Atmosphere	Vacuum or inert gas; if temperature is low enough, the protective atmosphere may not be necessary.	Vacuum or inert gas.	Vacuum or inert gas.	Vacuum or inert gas.

TABLE 4-1. FORMAT OF DIFFUSION BONDING TECHNIQUES (Continued)

Factor	I. Yield-Stress Controlled Bonding	II. Diffusion Controlled Bonding	III. Creep Controlled Bonding	IV. Transient-Melt Diffusion Bonding
5. Surface Cleanliness	Plastic deformation will break up the surface films, therefore the cleanliness required for diffusion and creep controlled bonding may be somewhat relaxed.	Impurities that inhibit diffusion and result in joints having poor mechanical properties must be eliminated.	Impurities that inhibit diffusion and result in joints having poor mechanical properties must be eliminated.	Impurities that inhibit diffusion and result in joints having poor mechanical properties must be eliminated.
6. Surface Roughness	No smoother than necessary to assure intimate contact, considering the amount of plastic deformation.	Further clarification is desirable but in general the roughness should be less than 100 microinches.	Further clarification is desirable but in general the roughness should be less than 100 microinches.	A rougher surface than techniques II and III is satisfactory; as the roughness increases, the amount of intermediate metal must increase to assure that interface voids do not develop.
7. Intermediate Metal	Desirable for lowering the bonding pressure and temperature; careful consideration of alloying characteristics is required.	Desirable for lowering the bonding pressure and temperature; careful consideration of alloying characteristics is required.	Desirable for lowering the bonding pressure and temperature; careful consideration of alloying characteristics is required.	Necessary when joining similar metals; dissimilar metal combinations may provide low melting eutectics; normal alloying considerations apply.

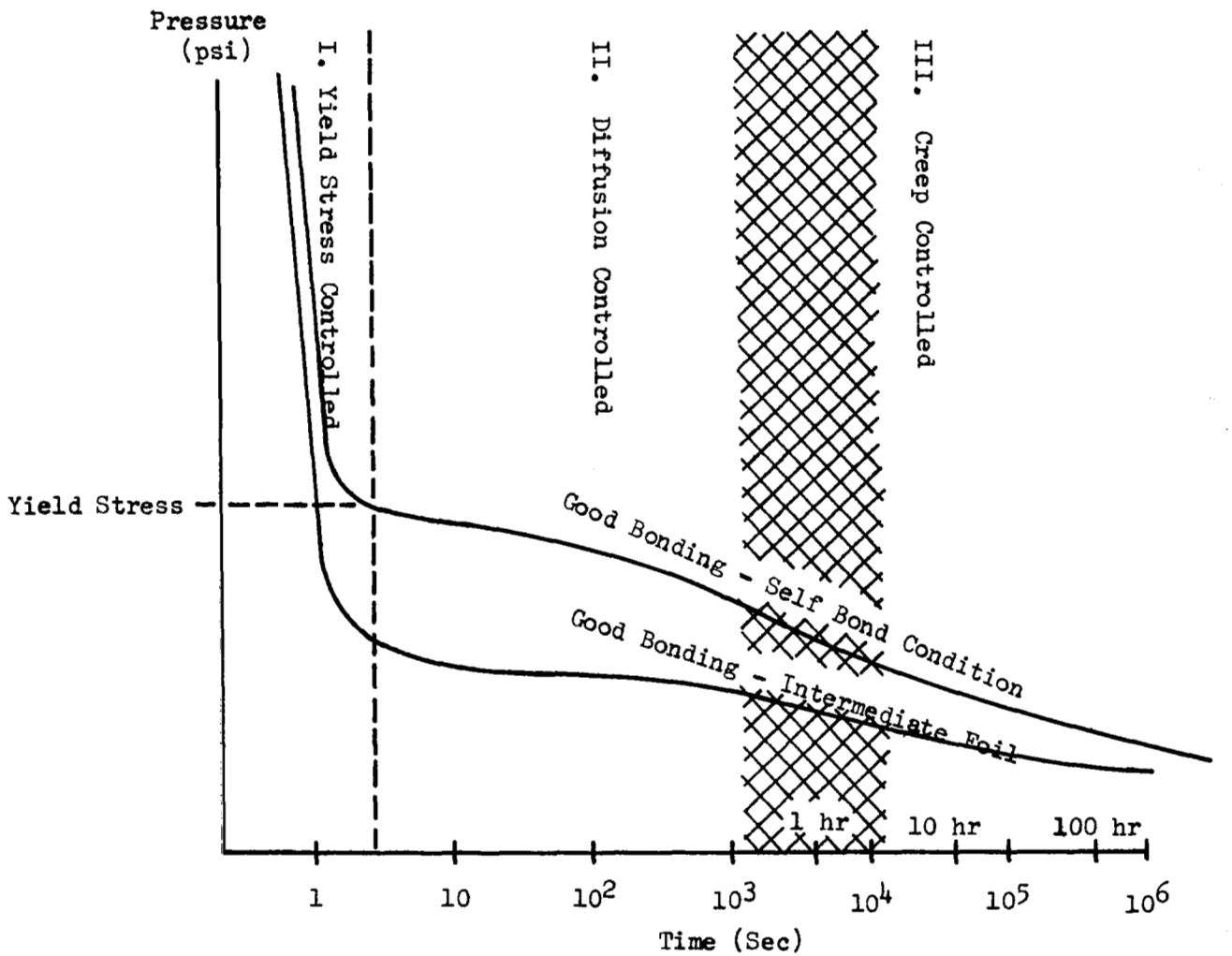

Figure 4-1. Time-Pressure Relation for Diffusion Bonding. (From: "The Application of Refractory Metal Foils to Re-entry Structures" by A. G. Metcalfe, et al, in Proceedings of Golden Gate Metals Conference ASM, February 13-15, 1964, Volume II, p. 667-735).

Each of the above classes of techniques may be examined for the particular application and the most suitable selected for experimental investigation. Knowing the material characteristics, the bonding pressure and temperature range can be selected from the bonding format. Then these conditions can be compared with the capacity of the available equipment and the joint geometry.

For example, initially yield-stress controlled bonding may be considered. This means that the necessary interface and component deformation must be acceptable. If the particular component geometry is such that no deformation is acceptable or if the available equipment cannot provide sufficiently high bonding pressures and temperatures, diffusion or creep controlled bonding can be considered.

When the size or geometry of the components to be joined precludes pressures greater than several psi, transient melt diffusion bonding is attractive. The acceptability or removal (by diffusion treatment) of the low melting phase is a major consideration.

Having made an analysis of diffusion bonding as described above, an appropriate investigative effort is planned based upon prior research. This work is directed toward determining specific bonding parameters from the general definitions of the format.

E. PROPOSED DEVELOPMENTAL WORK

The experimental work described in this section is directed at clarifying certain of the fundamental considerations of the diffusion

bonding process. The proposed work is viewed as forming a basis for a clearer understanding of the process and thereby its broader application. Specific materials are not discussed but, rather, the overriding considerations that are common to all materials.

1. Intimate Contact

Determination of the material factors that are most desirable for obtaining intimate contact of two solid surfaces is necessary to describe the minimum bonding temperature and pressure. The primary factors are surface roughness and cleanliness. In order to minimize the formation of interfacial voids and achieve metal-to-metal contact over the entire interfacial area, it is necessary to know the relationship of these factors. For this reason, it is proposed that research be conducted along the lines described below.

(a) Investigate several materials and develop a model relating the yield stress, modulus, ductility, strain hardening and the surface roughness that result in the minimum bonding pressure and temperature that yield maximum area of contact.

(b) Based upon the information developed in (a), investigate the influence of surface contamination (primarily oxides and interstitials such as nitrogen, carbon, etc.) on formation of intimate contact.

Initially such an investigation would be done with similar metals to obtain the basic information. Cunningham and Spretnak[10] have conducted an investigation of this nature on the self-bonding of copper. Continued work in this direction is warranted to develop a model that applies to widely varying mechanical properties. Eventually the work should be extended to cover the bonding of dissimilar metal combinations.

2. Interdiffusion

When dissimilar metals are in contact at elevated temperatures, interdiffusion will occur. This interdiffusion is a significant factor during diffusion bonding and subsequent elevated temperature service. Hence, in any joining operation involving dissimilar materials, there must be assurance that the properties of the resultant solid are satisfactory for the intended use.

The study of the literature on diffusion bonding indicates that the interdiffusion of dissimilar metals during joining or in service oftentimes results in void formation. Furthermore, mechanically unsatisfactory properties can develop in the joint as a result of the interdiffusion morphology.

The desire to fabricate components made of dissimilar materials is growing. The wider application of diffusion bonding will also require the use of dissimilar metals in contact. There are two characteristic requirements of diffusion bonding that make this association necessary:

(a) The use of a lower melting intermediate metal to enhance diffusion and the formation of intimate contact, and

(b) The use of barrier metals to eliminate or retard the interdiffusion of metallurgically incompatible metals.

When two metals having a large difference in their melting points are in contact, the diffusivity of the lower melting metal will be higher. It is often seen under these conditions that interdiffusion of these two metals will result in the formation of voids in the lower melting metal. This occurrence is not seen in all cases. Apparently void formation results from the more rapid movement of the atoms from the lower melting material into the higher melting material. More complete information is needed to understand which metal combinations will produce voids. Such information is prerequisite to proper selection of intermediate materials.

The mechanical properties of the solid (alloy) that results from the interdiffusion of two metals is of paramount importance. It is generally recognized that some degree of solid solubility of the metals is necessary and that brittle phases and intermetallic compounds are to be avoided.

The joining of two dissimilar metals is the formation of a new alloy or series of alloys. Frequently it is desirable to join metals that do not meet with the requirements noted above. One obvious solution is to use a diffusion barrier, if one is available, or to

select a third metal that can form an alloy having satisfactory mechanical properties. The work of Peters, et al[67] provides insight into the behavior of intermetallic compounds and some hope that they may be modified by alloying to be mechanically acceptable.

The properties of alloys that can form as a result of interdiffusion can be evaluated by the normal fabrication techniques. However, the need for fundamental research is indicated to clarify the microstructural behavior when dissimilar metals are allowed to interdiffuse. Some experimental work directed at identifying the formation of intermetallics in joints between various dissimilar metals has been conducted by Young and Jones.[76] Diffusion couples between various metals were bonded and allowed to interdiffuse at elevated temperatures for considerable lengths of time. The resulting joint microstructures and hardness values across the joint were recorded. Some of the pertinent data obtained in this investigation is presented in Table 4-2.

Having conducted research directed toward this end, there will be a better understanding of the metals that may be used as intermediate metals to enhance diffusion and barriers to retard diffusion.

3. Tooling and Release Materials

Practical application of diffusion bonding requires tooling and release materials appropriate for the joint configuration and materials to be joined. The tooling fixtures apply the bonding pressure and provide

TABLE 4-2

SUMMARY OF BONDING COMBINATIONS, THICKNESS AND HARDNESS INCREASE OF INTERMETALLIC ZONES[76]

No.	Base Metal Combination	Thickness of Intermetallic Zone In. x 10^4			% Increase in Hardness at Joint Over the Harder Base Metal		
		A. 1800°F 4 Hrs.	B. 2000°F 4 Hrs.	C. A+1600°F 100 Hrs.	A. 1800°F 4 Hrs.	B. 2000°F 4 Hrs.	C. A+1600°F 100 Hrs.
1	Cb-1Zr to Mo-.5Ti	Nil	Nil	---	0	---	---
2	Cb-1Zr to 316 SS	2.0	4.5	5.0	325	300	325
3	Cb-1Zr to L-605	1.6	5.9	---	140	---	---
4	F-48 to Mo-.5Ti	Nil	Nil	---	0	---	---
5	F-48 to 316 SS	2.2	3.7	---	108	---	---
6	F-48 to L-605	?	4.0	---	63	100	---
7	Mo-.5Ti to 316 SS	1.4	4.3	---	79	---	---
8	Mo-.5Ti to L-605	1.2	4.0	---	125	---	---
9	Mo-.5Ti to Rene 41	1.6	3.1	---	88	97	---
10	Cb-1Zr to Cn	Nil	---	Nil	0	---	0
11	Cu to 316 SS	*	---	*	0	---	0
12	Be to 316 SS	Not Measurable	---	---	570	---	---

* An extensive, soft diffusion zone was observed.

material support and protection from gaseous contamination during bonding. Tooling, as used here, refers to all materials having access to the components to be joined.

With respect to the materials to be joined, the release materials should:

(a) Form no bond

(b) Not contaminate

(c) Be easy to utilize and subsequently remove

No sticking between tooling and components is obviously the desirable condition. However, it is frequently not possible. In such cases, the removal of tooling or support fixtures depends upon formation of only a weak bond with the component, or the tooling is leached out by an acid treatment.

Contamination during bonding can be gaseous (i.e. oxygen, nitrogen, etc.) or solid. The solid contamination refers to formation of mechanically undesirable phases and compounds through interdiffusion with tooling fixtures.

The ease of handling of release materials is an important consideration. In the case of solid materials that also perform a support task, fabrication to the desired shapes should not require complicated techniques or cost of the joining operation increases rapidly. Liquid stop-weld materials, applied in the form of thin films or castable slurries, are frequently the easiest to use.

It is evident that the tooling and release materials are an integral part of any diffusion bonding application. Therefore, when this process is considered for joining new materials, the factors discussed here must be evaluated.

4. Thermal Stability

With the increasing desire to join dissimilar metal components, diffusion bonding is a logical consideration. It is recognized that when the coefficient of thermal expansion and the modulus of the materials involved are different, a temperature change can cause thermal stresses. In particular, there is concern for satisfactory performance of such a joint under conditions of thermal cycling. Conceivably, thermal stresses could cause dissimilar metal joint failure even under conditions of no external load.

There is increasing recognition in the literature of the problem of different thermal and mechanical properties, but analytical treatment of dissimilar metal joints appears to be lacking. Admittedly, it is a difficult task.

As previously reported in Chapter 3, one approach to this problem is to use a material having an intermediate coefficient of expansion between the dissimilar metals in the joint. Extending this concept, a transition piece with a continuously varying coefficient of thermal expansion has been used for bridging the gap between the two metals.[23]

The practical implications of these approaches are not clear, especially when one considers the larger structural configurations.

It appears desirable that the thermal stability of dissimilar metal joints be treated analytically and experimentally. The resulting information will allow the selection of dissimilar metal combinations and joint configurations that can perform as a satisfactory joint. This information should relate the coefficient of thermal expansion, modulus, yield stress, ductility and interdiffusion of the materials with the mechanical properties of the joint. The mechanical properties of interest are the static and fatigue (i.e. mechanical and thermal) strength.

5. Diffusion Acceleration Aids

A number of techniques to accelerate atomic diffusion have been investigated. The most obvious diffusion aid is, of course, the use of a lower melting metal in combination with a high melting metal. This approach has been discussed in length in other sections and will not be considered here. It is stressed again that the primary requirement for an intermediate metal is metallurgical compatibility with the metals to be joined. Some additional techniques, whose contribution to diffusion is not yet clarified, are listed below with appropriate discussion.

(a) Surface Conditioning

A high dislocation density on a surface will increase the tendency toward recrystallization. Surface conditioning by abrasion,

shot peening or other techniques is a direct attempt to create a more active surface. There is diffusion bonding experience that suggests that bond formation is assisted by this approach.[21] However, the broad implications of this technique are not clear. The magnitude of this effect should be determined, as indicated below:

(1) Evaluate the effects of surface conditioning of several materials on the minimum bonding temperature and pressure.

(2) Investigate the effect on the joint microstructure. The effect of this high dislocation density on the mobility of the interface and formation and growth of voids must be known.

(b) Induction Heating

Samuel[68] has demonstrated that induction heating enhanced diffusion in bonding experiments. The reasoning to support the enhanced diffusion effect is presented in the form of three possible phenomena:

(1) Diffusion at grain boundaries or subgrains takes place initially due to the sharp temperature gradient which is then followed by transverse volume diffusion, or

(2) The change in magnetic susceptibility at different concentrations of the diffused layer cause additional atomic mobility, or

(3) The high frequency field affects the electron distribution and lattice spacing of the material and increases the number of atoms capable of moving into vacant sites.

Other research[69] was conducted to confirm the results obtained by Samuel. This work could not duplicate the previous results and reported that the accelerated diffusion effect was not due to induction heating.

The real effect of induction heating on diffusion is not clearly understood. It appears evident that further investigation of possible enhanced diffusion due to induction heating is warranted. It is also reasonable that the effect of high frequency resistance heating be investigated for an enhanced diffusion effect.

(c) Allotropic Phase Transformations

There is fundamental reason and experimental evidence indicating that cyclical heating through a phase transformation temperature enhances diffusion. Research[69] has been conducted to evaluate this concept for aiding diffusion bonding. Titanium was used as an intermediate metal for joining TZM lap joints. Titanium undergoes a phase change at 1625° F and experimentation has shown that bonds produced at temperatures near this phase transformation temperature were stronger than bonds produced at both lower and higher temperatures.

The increase in bond strength was slight and so was not investigated further. A possible explanation was that the strength increase may be due to a superplasticity effect in titanium during the transformation.

It is recognized that this effect is probably of small magnitude and is limited in application by the requirement of a phase change at a temperature that is acceptable to the metals to be joined. However, it is a source of energy that may be beneficial in certain applications.

It is pointed out that the transformation under consideration is diffusionless and results in a volume change. Therefore, the possible enhanced diffusion related to this effect is dependent upon this volume change. There is an accompanying rearrangement of the surface atoms and thereby an activation on the surface that conceivably can enhance diffusion in the interface.

It is recommended that the relative contribution of this effect be evaluated with respect to the other diffusion accelerating methods.

(d) Small Diameter Atoms

The use of small diameter atoms as an intermediate metal to enhance diffusion is an attractive idea. Conceivably, these atoms can diffuse interstitially at higher than normal rates. Feduska[61] has developed beryllium transport alloys for diffusion bonding iron, nickel and cobalt-base high-temperature alloys. Beryllium with its

small atomic diameter is reported as a useful "primary" diffuser element for facilitating the bonding of these materials. Beryllium powder suspended in an organic binder has also been used to make strong ductile joints with stainless steel.[70]

It is readily appreciated that elements like beryllium, silicon and phosphorous should diffuse more rapidly because of their small size. However, unless intimate contact is attained prior to the diffusion treatment, the mechanism for the enhanced union of two solids is not evident. If intimate contact has already been attained, possibly by using very high bonding pressure, then the need for sophisticated diffusion aids is not clear.

Investigative work should be directed towards evaluating the real contribution of small diameter atoms to diffusion bonding. For instance, if the minimum bonding pressure and temperature (with controlled surface condition) are known for a metal, then the real effect of a small diameter atom on diffusion can be evaluated in comparison with this prior experience.

6. Joint Evaluation

Mechanical testing of diffusion bonded joints must be designed in consideration of anticipated stress conditions in service. A contribution in this direction has been made by the study conducted at Solar.[73,74] An analysis of stress distribution in single overlap joints has

described the tearing stresses created normal to the plane of the joint. It was found that:

(a) Tearing stresses increase rapidly with a decrease in the thickness of the intermediate foil in the joint. The maximum tearing stress increased by a factor of 9, when the intermediate foil thickness decreased from .002" to .0002". These computed values are for joints in columbium with a titanium interleaf.

(b) The tearing stress increases greatly with increase in the modulus of elasticity of the intermediate material. Joints of tantalum with different intermediate metals were used to illustrate this behavior. The computed tearing stress increased from 9 to 249 psi when the modulus of elasticity of the intermediate increased from 1 to 27 million psi.

(c) The tearing stress rises with increasing overlap length. In a tantalum to tantalum joint, the maximum tearing stress increased from 249 psi to 1,013 psi when the overlap length increased from 0.050" to 0.1".

(d) The tearing stress varies in magnitude and sign along the length of the overlap. These computed stresses are tensile at the center of the overlap, become compressive when going away from the center and become tensile as the end of the joining metal is

approached. The tearing stress has its maximum value at the end of the joint.

(e) In this work, it was found that an overlap length of 4 to 8 times the material thickness was adequate to assure 100 percent joint efficiency.

These findings highlight the complex stress state that exists in a simple lap joint.

Solar has selected the tensile shear test as the best single method to evaluate diffusion bonded joints based on their findings. However, it is pointed out that a satisfactory mechanical test must duplicate as nearly as possible the anticipated stress state in service. On foil or thin sheet, the peel test is also highly recommended. Additional mechanical tests such as thermal stability, stress rupture and fatigue are appropriate and frequently necessary. Representative test specimens for conducting these tests on diffusion bonded joints are shown in Reference 74.

An additional consideration to mechanical testing arises due to the absence of filleting adjacent to diffusion bonded joints. A stress concentration similar to a small radius crack can develop at the edge of the bond with a possible compromise of a test. Test procedures should be designed to circumvent this inherent problem. Machining to remove this region or to provide relief is one solution.

Finally, it is stressed that realistic testing requires that the joints be evaluated by tests reflecting the actual service conditions.

F. SUMMARY

The intention of this section has been to provide a basis for the selection or rejection of a diffusion bonding technique for a joining application. A format for the selection of diffusion bonding techniques has been presented. The utility of this format in planning and evaluating development efforts has been indicated. The need to evaluate each joining application for its special requirements prior to use of diffusion bonding has been stressed.

A large part of this chapter has been devoted to discussion of development work required to clarify the following fundamental considerations of the diffusion bonding process:

Intimate Contact

Interdiffusion

Tooling and Release Materials

Thermal Stability

Diffusion Acceleration Aids

Joint Evaluation

CONCLUSIONS AND RECOMMENDATIONS

Diffusion bonding is a specialized joining process that offers unusual advantages when compared to routine joining techniques. The inadequacy of standard techniques for fabricating structures from certain materials of interest in the aerospace and nuclear industries will result in increasing emphasis on diffusion bonding. This technique can produce joints which possess properties closely approaching those of the base metals. The process has been used to combine ductile and brittle materials and to produce joints of high reliability as demonstrated in fabrication of nuclear reactor fuel elements. These factors, plus a growing need for the joining of similar and dissimilar materials in the solid state, will result in increased utilization of diffusion bonding.

At present, the application of diffusion bonding to the joining of complex structures requires considerable development work. A diffusion bonding format such as the one presented in Table 4-1 should be used to plan and evaluate the required development effort. The reliability of the process will be increased through a better understanding of the fundamental areas affecting the process as indicated in Chapter 4. It is believed that further research should be conducted

to permit the broadest possible utilization of the process at the earliest practicable time. The areas of research are:

Achievement of Intimate Contact

Interdiffusion

Tooling and Release Materials

Dissimilar Joints under Thermal Fluctuation

Diffusion Acceleration Aids

Joint Evaluation

CITED REFERENCES

1. Feinstein, L. "Diffusion Bonding," paper presented at the Golden Gate ASM Conference (February, 1964).

2. "Atom Movements," ASM Publication (1951).

3. Shewmon, P. G. Diffusion in Solids. McGraw-Hill Book Company, Inc., New York (1963).

4. Birchenall, C. E. and Mehl, R. F. "Thermodynamic Activities and Diffusion in Metallic Solid Solutions," Transactions of AIME, Vol. 171 (1947), 143-165.

5. Hudson, J. and Hoffman, R. Transactions of AIME, Vol. 221 (1961), 761.

6. Friauf, R. J. Physics Review, Vol. 105 (1957), 843.

7. Zener, C. "Ring Diffusion in Metals," Acta Crystallographica, 3 (1950), 346.

8. Toth, L. E. and Searcy, A. W. "Prediction of Activation Energies for Self-Diffusion in Metals," University of California, Lawrence Radiation Laboratory, Report UCRL-10581 (March 15, 1963).

9. Toth, L. E. "Prediction of the Activation Energies for Diffusion of the Individual Components in Face-Centered Cubic Binary Alloys," University of California, Lawrence Radiation Laboratory, Report UCRL-10653 (March 15, 1963).

10. Cunningham, G. W. and Spretnak, J. W. "The Mechanism of Pressure Bonding," Battelle Memorial Institute, Report BMI-1512 (April 12, 1961).

11. Krier, C. A. "Coatings for the Protection of Refractory Metals from Oxidation," Battelle Memorial Institute, DMIC Report 162, (November 24, 1961).

12. Passmore, E. M., Boyd, J. E., Neal, L. P., Anderson, C. A. and Lement, B. S. "Investigation of Diffusion Barriers for Refractory Metals," Manufacturing Laboratories, Inc., WADD Technical Report 60-343 (August, 1960).

CITED REFERENCES (Continued)

13. Fugardi, J. and Zambrow, J. L. "The Cladding and Welding of Stainless Steel to Molybdenum and Niobium," Sylvania-Corning Nuclear Corporation, WADC Technical Report 58-674 (October, 1959).

14. Briggs, B. N. and Friske, W. H. "Development of Niobium Diffusion Barriers for Aluminum-Clad Uranium Alloy Fuel Elements," Atomics International, Report NAA-SR-7973.

15. Passmore, E. M., Boyd, J. E. and Lement, B. S. "Investigation of Diffusion Barriers for Refractory Metals," Manufacturing Laboratories, Inc., ASD-TDR-62-432 (July, 1962).

16. Conch, D. E., et al. "Protection of Molybdenum from Oxidation at Elevated Temperatures," Journal of Electrochem Society, 105 (8), (August, 1958), 450-456.

17. Dunning, J. S. "Basic Metallurgy of Diffusion Bonding," Solar Report 1, BPSN Nr: 64-6899-7351-735102, (August 24, 1964).

18. Keller, D. V. Jr. "Adhesion Between Atomically Clean Surfaces," NASA TN D-2228 (February, 1964).

19. Anderson, O. L. "The Role of Surface Shear Strains in the Adhesion of Metals," Part I, 3, Wear (1960), 253-273.

20. Paprocki, S. J., Hodge, E. S. and Gripshover, P. J. "Gas Pressure Bonding," Battelle Memorial Institute, DMIC Report 159 (September 25, 1961).

21. Paprocki, S. J., Hodge, E. S. and Gripshover, P. J. "The Bonding of Molybdenum- and Niobium-Clad Fuel Elements," Battelle Memorial Institute, Report BMI-1451 (July 12, 1960).

22. Peckner, D. "Joining Dissimilar Metals," Materials in Design Engineering (August, 1962), 115-122.

23. Zimmer, F. "New Ways to Bond Dissimilar Materials," Metal Progress (January, 1963), 101-104, 147-148.

24. "Corrosion of Metals," ASM Publication (1946).

25. Metcalfe, A. G. "Modern Diffusion Bonding Meets Space Age Needs," SAE Journal (April, 1964), 53-57.

CITED REFERENCES (Continued)

26. Koppenhofer, R. L., Lewis, W. T., Faulkner, C. E., Rieppel, P. J. and Cook, H. C. "Induction-Pressure Welding of Girth Joints in Steel Pipe," Welding Journal (July, 1960), 685-691.

27. "The Materials System," Steel (October 21, 1963), 89-112.

28. Roll Welded Sandwich Structures, Douglas Aircraft Company, Inc. Publication.

29. Afanasev', I. V., Kosichkin, N. V., Khudyshev, A. F. and Elbakidze, V. E. "Vacuum Diffusion Welding and Diffusion Welding in a Controlled Atmosphere," Welding Production (April, 1963), 49-52.

30. Ushakova, S. E. "Diffusion Welding Used in Producing Certain Types of Component," Welding Production (May, 1963), 34-36.

31. Kazakov, N. F. "Pressure Welding in Vacuum," Brutcher Translations No. 4516, translated from Avtomaticheskaya Svarka, Vol. 11, No. 8 (1958), 6-18.

32. Brophy, J. M., Heidklang, M. R. and Kovach, P. J. "The Activated Joining of Tungsten," Welding Journal (September, 1963), 404S-410S.

33. King, J. P. Jr., et al. "Diffusion Bonded Honeycomb Sandwich Panels," North American Aviation, Inc., ASD Project Nr 7-950 Interim Engineering Progress Reports IR-7-980(I) to IR-7-980(VI).

34. Feduska, W. "An Evaluation of the Diffusion-Bonding Characteristics of Zircaloy-2," Welding Journal (July, 1959), 289S-295S.

35. Lehrer, W. and Schwartzbart, H. "Diffusion Bonding of Zircaloy Plate Type Fuel Elements," Welding Journal (February, 1961), 66S-80S.

36. Lasco, E. F., Fischer, R. L., Saunders, N. T. and Wolfe, R. A. "Plate Type UO_2 Bearing Fuel Elements for the PWR Core 2 Blanket," TID-7559 (Part I), (August, 1959).

37. Hickox, G. L. "Diffusion Bonding of Tungsten Alloys," Aerojet General Corporation, Final Report No. 0433-01F, Technical Report No. WAL TR465.54/4 (November 15, 1962).

38. "New Twist Boosts Coldweld Quality, Reliability," Steel (May 11, 1964), 66-67.

CITED REFERENCES (Continued)

39. Moss, A. R. "The Pressure Welding of Molybdenum," Journal of the Institute of Metals, 82 (1954), 374-378.

40. "Diffusion Bonding," Atomics International Publication.

41. Bingham, F. O. and Woods, C. R. "Gas Pressure Bonding of Production Size PWR Core 2 Plate Type Fuel Elements Containing Ceramic Fuel," AEC Research and Development Report WAPD-245 (May, 1963).

42. Niemann, J. T., Sopher, R. P. and Rieppel, P. J. "Diffusion Bonding Below 1000°F," Welding Journal (August, 1958), 331S-342S.

43. Hexcel Products Inc. Unpublished data.

44. Gerken, J. M. "Diffusion Bonding Joins Zircaloy and Stainless," American Machinist (June 1, 1959), 118-119.

45. Passmore, E. M. "Beryllium Joining," WADD-TR-59-695, Part II (April, 1960).

46. Davies, R. J. and Stephenson, N. "Diffusion Bonding and Pressure Brazing of Nimonic 90 Ni-Cr-Co Alloy," British Welding Journal (March, 1962), 139-142.

47. Clark, E. J. "Vacuum Diffusion Joining of Titanium," Welding Journal (June, 1959), 251S-262S.

48. King, P. P. and McGeary, R. K. "Braze Bonding Stainless-Steel Fuel Elements for Nuclear Reactors," Welding Journal (June, 1959), 241S-246S.

49. "Lightweight Rocket Nozzle - Final Report," Solar Engineering Report 933-16 (August 1, 1961).

50. Bertossa, R. C. "Methods for Brazing Unusual Metal Combinations," ASM Metals Engineering Quarterly (February, 1964), 46-50.

51. "Joints Made Leaktight via Eutectic Bonding," Steel (February 3, 1964) 61-62.

52. Slaughter, G. M., Patriarca, P. and Manly, W. D. "Bonding of Cermet-Valve Components to Metals," Welding Journal (June, 1958), 249S-254S.

53. Noland, R. A. "Manufacture of Fuel Plates and Fuel Subassemblies for the Argonne Low Power Reactor, TID-7559.

CITED REFERENCES (Continued)

54. Dunning, J. S. "Basic Metallurgy of Diffusion Bonding," Solar Report 2, BPSN Nr: 64-6899-7351-735102 (December 11, 1964).

55. Metcalfe, A. G., Lindemer, T. B. and Rose, F. K. "Diffusion Bonding of Refractory Metals," Interim Technical Documentary Progress Report 4 on Contract AF33(657)-8789, Solar Report RDR 1322-4 (July 1, 1963).

55. Metcalfe, A. G., Rose, F. K. and Dunning, J. "Diffusion Bonding of Refractory Metals," Interim Technical Documentary Progress Report 6 on Contract AF33(657)-8789, Solar Report RDR 1322-6 (January 10, 1964).

57. "Solid State Diffusion Bonding of Columbium with Interfacial Materials at Temperatures of 1,050 to 1,375°C," USBM-U-1107 (January 1, 1964).

58. Metcalfe, A. G. "Reactive Brazing--a New Joining Method," Metal Progress (May, 1963), 83-86.

59. Lynch, J. F., Feinstein, L. and Huggins, R. A. "Brazing by the Diffusion-Controlled Formation of a Liquid Intermediate Phase," Welding Journal (February, 1959), 85S-89S.

60. Hoffman, J. A., Baxter, G. R., Bertossa, R. C. and Cottrell, B. R. "Diffusion Bonding Beryllium Copper for Ultra High-Strength Joints," Welding Journal (April, 1962), 160S-166S.

61. Feduska, W. and Horigan, W. L. "Diffusion Bonding High-Temperature Alloys with Beryllium," Welding Journal (January, 1962), 28S-35S.

62. Storcheim, S. "Hot Pressure Bonding," Metal Progress, 72 (1), (July, 1957), 97-101.

63. Storcheim, S. "Some Studies of Aluminum-Copper and Aluminum-Zirconium State Bonding," AIME Trans - Journal of Metals (August, 1955), 891-894.

64. Storcheim, S., Zambrow, J. L. and Hausner, H. M. "Solid State Bonding of Aluminum and Nickel," US AEC Report SEP-132 (July 8, 1953).

65. "The Tensile Strength of Solid State Bonded Aluminum to Nickel Plasted Uranium," BMI-956 (October, 1954).

66. Metcalfe, A. G., Welty, J. W. and Stetson, A. R. "The Application of Refractory Metal Foils to Re-Entry Structures," Proceedings of Golden Gate Metals Conference ASM, Vol. II (February 13-15, 1964), 667-735.

67. Peters, E. T., Ryan, J. J., Vilks, I. and Tanner, L. E. "Mechanical Behavior of Intermetallic Compounds," MANLABS, Inc., ASD-TDR-62-1087 (December 1, 1964).

68. Samuel, R. L. and Samuel, J. D. "The Effect of High Frequency Heating on the Diffusion Properties of One Metal into Another," Metallic Surfaces Research Laboratories, Ltd., England, ATR No. 1, ASTIA Document 239-866 (April 10, 1960).

69. Metcalfe, A. G. and Lindemer, T. B. "Diffusion Bonding of Refractory Metals," Interim Technical Documentary Progress Report 2 on Contract AF33(657)-8789, Solar Report RDR 1322-2 (January 2, 1963).

70. Feduska, W. "Diffusion Bonding of Metal Members," U. S. Patent No. 3,145,466 (August 25, 1964).

71. Weismantel, E. E. and Taber, K. C. "Practical Aspects of Brazing Beryllium Metal," Welding Journal (December, 1964).

72. "The Promise of Composites," Materials in Design Engineering, Special Report No. 210 (September, 1963), 79-126.

73. Metcalfe, A. G., Rose, F. K. and Dunning, J. S. "Final Report on Diffusion Bonding of Refractory Metals and TD Nickel, Volume I, Development of Diffusion Bonding Processes," Technical Report No. AF ML-TR-64-394, Volume I, on Contract AF33(657)-8789 by Solar (December, 1964).

74. Metcalfe, A. G., Rose, F. K. and Zumbrunnen, A. "Final Report on Diffusion Bonding of Refractory Metals and TD Nickel, Volume II, Evaluation of Bonding Processes," Technical Report No. AF ML-TR-64-394, Volume II, on Contract AF33(657)-8789 by Solar (December, 1964).

75. Redden, T. K., Kutchera, R. E. and Carlson, R. G. "Development of Joining Techniques for TD-Nickel," Interim Progress Report No. 1-8-211 on Contract AF33(615)-1403, General Electric (August 15, 1964).

76. Young, W. R. and Jones, E. S. "Joining of Refractory Metals by Brazing and Diffusion Bonding," Technical Documentary Report No. ASD-TDR-63-88 (January, 1963).

77. McGown, P. R., Williams, N. R. and Allyn, J. I. "Diffusion Bonded Titanium Alloy Honeycomb Panels," Interim Engineering Progress Report under Contract AF 33(615)-1399 by the Douglas Aircraft Company (July 13 - October 31, 1964).

BIBLIOGRAPHY OF GENERAL REFERENCES

1. Crank, J. Mathematics of Diffusion. Fair Lawn, New Jersey, Oxford University Press (1956).

2. Jost, W. Diffusion in Solids, Liquids and Gases. New York, Academic Press, Inc. (1952).

3. Baarer, R. M. Diffusion In and Through Solids. Cambridge, Massachusetts, Cambridge Press (1951).

4. Castleman, L. S. "An Analytical Approach to the Diffusion Bonding Problem," Nuclear Science and Engineering, 4 (1958), 209-226.

5. Kirklady, J. S. "Diffusion in Multi-Component Metallic Systems," Canadian Journal of Physics, 36 (1958), 899, 907, 917.

6. Kidson, G. V. "Some Aspects of the Growth of Diffusion Layers in Binary Systems," Journal of Nuclear Materials, Vol. 3, No. 1 (1961), 21.

7. Gruzin, P. L. "Certain Laws of Diffusion and Distribution of Elements in Alloys," Metal Science and Heat Treatment, Nos. 10-12 (1960).

8. Kinzel, A. B. "Adams Lecture-Solid Phase Welding," Welding Journal (December, 1944), 1124-1143.

9. Resnick, R. and Castleman, L. S. "The Self-Diffusion of Columbium," Transactions of AIME, 218 (4), 307-310.

10. Peterson, N. L. "Diffusion in Refractory Metals," WADD Technical Report TR 60-793 (March, 1961), 155.

11. Sherby, O. D. and Simnad, M. T. "Prediction of Atomic Mobility in Metallic Systems," ASM Transactions Quarterly, 54 (3), (September, 1961), 227-239.

12. Klopp, W. D. and Bath, V. D. "Diffusion Rates and Solubilities of Interstitials in Refractory Metals," DMIC Memo 50 (April 4, 1960).

13. "Diffusion Studies," Reactor Core Materials, 4 (1), (February, 1961), 52.

14. Yao, G. L. "A Note on the Diffusion in Metals," Canadian Journal of Physics, 40 (3), (March, 1962), 367-370.

15. Weeton, J. W. "Chromium Diffusivity in Alpha Cobalt-Chromium Solid Solutions," ASM Transactions, Vol. 44 (1952), 436-449.

16. Baird, J. D. "The Formation of Intermediate Alloy Layers in the Inter-Diffusion of Metals," Journal of Nuclear Energy, Part A (11), 81.

17. LeClaire, A. D. "Diffusion in Metals," Progress in Metal Physics, Vol. 4, Interscience Publishers (1953), 265-332.

18. Goold, D. "Diffusion of Aluminum, Tin, Vanadium, Molybdenum and Manganese in Titanium," Journal of the Institute of Metals, Vol. 88 (1959-1960), 444-448.

19. Birks, L. S. and Seebold, R. E. "Diffusion of Nb with Cr, Fe, Ni, Mo and Stainless Steel," Journal of Nuclear Materials, 3 (No. 3), (1961), 249-259.

20. Wood, V. E., Austin, A. E. and Milford, F. J. "Theoretical Solutions to Grain Boundary Diffusion Problem," Battelle Memorial Institute, ASTIA Document No. AD288776 (1962).

21. Whipple, R. T. P. Philosophical Magazine, 45 (1954), 1225.

22. "Diffusion in Titanium and Titanium Alloys," Armour Research Foundation, Report ASD-TDR-62-561 (October, 1962).

23. Fine, L., Maak, C. N. and Ozanich, A. R. "Metallurgical Aspects of High Quality Pressure Welded Joints for Landing Gear - Part I - Influence of Oxygen," Metal Progress (February, 1946), 350-355.

24. Metcalfe, A. G. and Lindener, T. B. "Diffusion Bonding of Refractory Metals," Interim Technical Documentary Progress Report 1 on Contract AF 33(657)8789, Solar Report RDR 1322-1 (October 1, 1962).

25. Metcalfe, A. G., Lindemer, T. D. and Rose, F. K. "Diffusion Bonding of Refractory Metals," Interim Technical Documentary Progress Report 3 on Contract AF 33(657)-8789, Solar Report RDR 1322-3 (April 2, 1963).

26. Metcalfe, A. G., Rose, F. K., Dunning, J. and Nedosik, L. "Diffusion Bonding of Refractory Metals," Interim Technical Documentary Progress Report 5 on Contract AF 33(657)-8789, Solar Report RDR 1322-5 (October 1, 1963).

BIBLIOGRAPHY OF GENERAL REFERENCES (Continued)

27. Metcalfe, A. G., Rose, F. K., Dunning, J. and Zumbrunnen, A. "Diffusion Bonding of Refractory Metals," Interim Technical Documentary Progress Report 7 on Contract AF 33(657)-8789, Solar Report RDR 1322-7 (April 10, 1964).

28. Metcalfe, A. G., Rose, F. K., Dunning, J. and Zumbrunnen, A. "Diffusion Bonding of Refractory Metals," Interim Technical Documentary Progress Report 8 on Contract AF 33(657)-8789, Solar Report RDR 1322-8 (September 4, 1964).

29. Evans, R. M. "Diffusion Bonding of Metals," Light Metal Age, (October, 1960), 14-16.

30. Schwartzbart, H. "What Is Diffusion Bonding?" Welding Engineer (November, 1956).

31. D'Annessa, "Solid State Bonding of Refractory Metals," Lockheed Aircraft Report LMSC3-26-62-3 (September, 1962).

32. Castleman, L. S., Froot, H. A. and Seigle, L. "Fundamentals of Diffusional Bonding - V," US AEC Report SEP-256 (June 30, 1960).

33. Castleman, L. S., Froot, H. A. and Seigle, L. "Fundamentals of Diffusional Bonding - VI," US AEC Report SEP-258 (July 26, 1961).

34. Pulsifier, V. "Cladding and Bonding of the Refractory Metals," Fansteel Metallurgy Publication (April, 1960), 2-3.

35. Castleman, L. S. "Effect of Pressure on Intermetallic Layer Growth," Acta Metallurgia, 8 (3), (March, 1960), 137-146.

36. Hodge, E. S. "Gas Pressure Bonding of Refractory Metals," ASM Metals Engineering Quarterly, 1 (4), (November, 1961), 3-20.

37. Evans, R. M. "Notes on the Diffusion Bonding of Metals," DMIC Memo No. 53 (April 20, 1960).

38. Paprocki, S. J., Hodge, E. S. and Boyer, C. B. "Gas Pressure Bonding of Fuel Assemblies," US AEC Report TID-2559, Part I (August, 1959), 213-232.

39. "Pressure Bonding," Reactor Core Materials, Vol. 3, No. 1 (February, 1960), 17-50.

BIBLIOGRAPHY OF GENERAL REFERENCES (Continued)

40. Frownfelter, C. R. "Ultrasonic Welding of Refractory Metals," ASTIA Document No. AD-266-249 (July 31, 1961).

41. Vaidynath, L. R., and Millner, D. R. "Factors in Pressure Welding," British Welding Journal (January, 1960), 1-6.

42. "Gas Pressure Bonding," Reactor Core Materials, 4 (3), (August, 1961), 55.

43. "Isostatic Modification - Gas Pressure Bonding," AEC R&D Report WADD-MPP-88, Section B14(1), (October 23, 1960), 51.

44. Brophy, J. R., Heidklang, M., Kovach, P. and Wulff, J. "Joining of Refractory Metals - Tungsten," WAL Final Report TR 460-54/1-2 (March 30, 1962).

45. DeCecoo, N. A. and Parks, J. M. "Brazing of Titanium," Welding Journal (1953), 1071-1081.

46. "Diffusion Bonding," Reactor Core Materials, 4 (1), (February, 1961), 65-66.

47. McQuilan, W. P. "Diffusion Bonding: A New Way to Join Critical Parts," Materials in Design Engineering (April, 1960), 14-16.

48. Fugardi, I., and Zambrow, J. L. "Bonding of Various Metals and Alloys by Isostatic Pressing at Elevated Temperatures," Sylvania Corning, AEC R&D Report on Contract No. AT-30-C-EN-866 (December, 1958).

49. Vicars, E. C. "Diffusion Bonded Honeycomb," Hexcel Products Inc. Technical Report (October, 1963).

50. Beck, S. D. and Gedwill, M. A. Jr. "The Role of Creep in the Gas-Pressure Bonding Process," Battelle Memorial Institute, Report BMI-1351.

51. Boley and Weiner, Theory of Thermal Stresses, Wiley Publication.

52. Albom, M. J. "Joining Tungsten to Tungsten," Materials in Design Engineering (June, 1962), 12-13.

BIBLIOGRAPHY OF GENERAL REFERENCES (Continued)

53. Alftan, E. A. "Ultrasonic Treatment of Solid Metals and Alloys for Accelerated Diffusional and Diffusionless Processes," Brutcher Translations No. 4715, translated from Nauchn. Doklady Vyssh. Shkoly - Metallurgiya, 1 (January/March, 1959), 19-24.

54. Barta, I. M. "Low Temperature Diffusion Bonding of Aluminum Alloys," Welding Journal (June, 1964), 241S-247S.

55. Batista, R. I., et al. "Elevated Temperature Diffusion Bonding of Tungsten to Tungsten under Pressure," US AEC TID-4500 (August, 1962).

56. Buginas, S. J. "Cold Welding in a Vacuum: An Annotated Bibliography," Lockheed Aircraft Corporation, ASTIA Document No. AD-403441 (March, 1963).

57. Carmichael, D. C. "Diffusion Bonding Sets Sights on Near-Perfect Joint," Iron Age, Vol. 192, No. 3 (July 18, 1963), 81-83.

58. Cohen, J. B. "Beryllium Joining," AVCO Corp., WADC-TR-59-695, Part I (January 18, 1960).

59. "Brazing and Bonding of Columbium, Molybdenum, Tantalum, Tungsten and Graphite," DMIC Memorandum 153.

60. Dijksterhuis, P. R. "Method of Bonding a Titanium Member to a Ceramic Surface," U. S. Patent No. 2859512 (November 11, 1958).

61. Esgar, J. B., et al. "Recommendations and Evaluations of Materials Research Areas of Importance to Missile and Space Vehicle Structures," NASA TND-2125 (October, 1963).

62. Feinstein, L. "Investigation of Electron Device Materials Technology Studies of Brazing and Metal-Joining Problems," Stanford Research Institute, Report AF CRL 596 (July, 1961).

63. Gelles, S. H. "Beryllium Research and Development Program," ASD-TDR-62-509, Vol. II (April, 1963).

64. Gerken, J. M. and Faulkner, J. M. "Investigation of Welding of Commercial Columbium Alloys," ASD-TDR-62-292 (May, 1962).

65. Gibeaut, W. A., et al. "Summary of the Seventh Meeting of the Refractory Composites Working Group," DMIC Report 184 (May 30, 1963).

66. Grisaffe, S. J. and Spitzig, W. A. "Observations on Metallurgical Bonding Between Plasma-Sprayed Tungsten and Hot Tungsten Substitues," Transactions of American Society of Metals, Vol. 56, No. 3 (September, 1963), 618-628.

67. Guy, A. G. and Smith, C. G. "Analysis of Diffusion Phenomena in Three-Component Metallic Systems," ASM Transactions Quarterly, (March, 1962), 1-9.

68. Guy, A. G. and Eiss, A. L. "Diffusion Phenomena in Pressure Welding," Transactions American Society for Metals (April 15, 1957).

69. Haynes, C. W. "Development of Low Temperature Brazing of Tungsten for High Temperature Service," N62-12073 (March 26, 1962).

70. Mitz, G. L. "Method of Joining Metal by High Pressure Controlled Temperature Diffusion Welding," U. S. Patent No. 2,998,696.

71. Jones, J. B. "Fundamentals of Ultrasonic Welding," Aeroprojects, Inc., ASTIA Document No. AD-235 508 (April 26, 1960).

72. Koval'skii, L. S. and Stupak, L. M. "Scientific-Technical Conference on Vacuum Diffusion Welding of Metals, Alloys and Nonmetallic Metals (No. 2)," Translation of Avtomaticheskaya Svarka (USSR), 15: 9 (1962), 92-94.

73. McCowley, F. X. "Bonding of Titanium to Steel," U. S. Patent No. 2,998,642 (September 5, 1961).

74. "Refractory Metal Structural Development Program," Vol. I, McDonnell Aircraft Corporation, Report ASD-TR-61-392 (June, 1962).

75. Welty, J. W. "Joining of Refractory Metal Foils," Quarterly Progress Report 6 on Contract No. AF 33(657)-9442, Solar Report RDR 1324-6 (January 25, 1964).

76. Moore, V. S. and Stetson, A. R. "Evaluation of Coated Refractory Metal Foils," Quarterly Progress Report 4 on Contract No. AF 33 (657)-9443, Solar Report RDR 1325-4 (August, 1963).

77. Paprocki, S. J., et al. "Cladding UO_2 with Beryllium by Gas Pressure Bonding," Battelle Memorial Institute, Report BMI-1602 (November 13, 1962).

BIBLIOGRAPHY OF GENERAL REFERENCES (Continued)

78. Parks, J. M. "Recrystallization Welding," Welding Journal, 32 (5), (May, 1953), 209S-217S.

79. Parks, J. M. "Recrystallization Welding of Aluminum Aircraft Alloys," Armour Research Foundation, WADC Proj-No. 90-8648.

80. Philipchuck, V. "Explosive Welding," U. S. Patent No. 3,024,526.

81. Philipchuck, V. "Explosive Welding," ASD-TDR-61-124 (August, 1961).

82. Pogodin, G. I., Alekseev. "Effect of Ultrasonic Vibrations on Diffusion in Steels and Alloys at Elevated Temperatures," Brutcher Translations No. 4247, translated from Metallovedenie i Obrabotha Metallov, No. 6 (June, 1958), 14-17.

83. Rosenthal, P. "Project Neos: A General Study of Processes for the Realization of Design Configurations in Materials," Fifth Interim Technical Report, N64-11370 (October, 1963).

84. Rosenthal, P. "Project Neos: A General Study of Processes for the Realization of Design Configurations in Materials," Second Interim Technical Report, N63-18026 (April, 1962).

85. Seebold, R. E. and Birks, L. S. "Elevated Temperature Diffusion in the Systems Nb-Fe, Nb-Se, Nb-Zn, Nb-Co, Ni-Ta, Fe-Mo," U. S. Naval Research Laboratory, Report NRL5520 (September 19, 1960).

86. Semerov, A. P. "Seizing of Metals," ASTIA Document No. AD-255367 (May 4, 1961).

87. Shewmon, P. G. and Bechtold, J. M. "Marker Movements in Titanium-Molybdenum Diffusion Couples and the Zener Theory of D_o," Acta Metallurgia, Vol. 3 (September, 1955), 452, 455.

88. Storcheim, S. "Method of Solid State Welding," U. S. Patent No. 2,837,818 (June 10, 1958).

89. "Report No. 2 of the Aerospace Manufacturing Techniques Panel," Materials Advisory Board, Report MAB-139-M(AMT-2), (October 15, 1963).

BIBLIOGRAPHY OF GENERAL REFERENCES (Continued)

90. "Report No. 1 of the Aerospace Manufacturing Techniques Panel," Material Advisory Board, Report MAB-139-M(AMT-1), (December 31, 1962).

91. "Report of the Subpanel on Coatings - Refractory Metals Sheet Rolling Panel," Materials Advisory Board, Report MAB-181-M (June 1, 1962).

92. "Summary Report of the Aircraft and Astronautics Applications Panel," Materials Advisory Board, Report MAB-139-M(AA5), (October 31, 1962).

93. Ainbinder, S. B. and Klokova, E. F. "Mechanism of Bonding in Cold Welding of Metals," translated from Latvivas Psr Zinatru Akodemijas Vestis, No. 101877 (1954), 113-128.

94. Astrov, E. I. "Microstructure and Strength of Pressure Welded Joints in Clad Steels," Welding Production (2), (February, 1960), 33-39.

95. Brophy, J. H., Shepherd, L. A. and Wulff, J. "Nickel Activated Sintering of Tungsten," Powder Metallurgy (1961), 113.

96. Cole, S. W. Sr. "National Research Grows Metals Together," Metal Treating, Vol. 14, No. 2 (April-May, 1963), 11.

97. Durst, G. "A Few Observations on Solid Phase Bonding," Metal Progress (January, 1947), 97-101.

98. Gardner, F. S. "Pressure Welding - Part III - Hot Pressure Welding," Welding Journal, Vol. 30 (November, 1951), 995-1002.

99. Graziano, E. E. "All-Metal Sandwiches Except Honeycomb Core: An Annotated Bibliography," N63 18123 (March, 1962).

100. Guy, A. G. "Interstitial Diffusion," ASM Transactions, Vol. 44 (1952), 382-400.

101. Hicks, L. C., et al. "An X-ray Study of the Diffusion of Chromium into Iron," Transactions of AIME, Vol. 113 (1934), 162-172.

102. Hirano, K. I., et al. "Diffusion of Iron, Nickel and Cobalt in Aluminum," Acta Metallurgia (10), 9 (September, 1962).

103. "How to Pressure Weld Hollow Parts," American Machinist, 90 (21) (October 10, 1946), 110-112.

BIBLIOGRAPHY OF GENERAL REFERENCES (Continued)

104. Johnston, J. M., Udin, H. and Wulff, J. "Joining of Molybdenum," Welding Journal, 33 (9), (1954), 449S.

105. Kleis, J. "Joining Dissimilar Metals - Try Percussion Welding," Welding Design and Fabrication, Vol. 35, No. 8 (August, 1962), 34-35.

106. Lowy, M. J. and Jaffee, R. I. "On the Development of Low-Cost Formable All-Metal Sandwich Panels with Corrugated Cores," Aerospace Engineering, Vol. 20, No. 11 (November, 1961).

107. McEwan, K. J. B. and Milner, D. R. "Pressure Welding of Dissimilar Metals," British Welding Journal, Vol. 9, No. 7 (July, 1962), 406-420.

108. "Joining Refractory Metals by Thermochemical Means," Metal Progress, 82 (1), (July, 1962), 10.

109. Mirkin, I. L. "Mechanism of Diffusion in Hard Metals," US AEC TR-3269 (May, 1962).

110. Muccino, A. "Welding, Diffusion Bonding and/or Cold Welding," ASTIA Document No. AD-411777 (July, 1963).

111. "Incompatible Metal Tubes Welded Explosively," Nucleonics, Vol. 21, No. 12 (December, 1963), 59.

112. Paprocki, S. J. "Progress on the Use of Gas-Pressure Bonding for Fabrication of Low-Cost Ceramic, Cermet and Dispersion Fuels," Battelle Memorial Institute, Report BMI-1372 (August, 1959).

113. Tylecote, R. F. "Pressure Welding of Light Alloys without Fusion," Welding Journal, Vol. 26 (1), (1947), 88S-103S.

114. VanHorn, D. D. "Solid State Diffusion and the Motion of Phase Boundaries," ASM Transactions, Vol. 51 (1959), 185-198.

115. Underwood, E. E. "A Review of Superplasticity and Related Phenomena," Journal of Metals (December, 1962), 915-919.

116. Cunningham, G. W. "The Mechanism of Pressure Bonding," presented at AIME Session of Western Metal Congress and Exposition (March 21, 1963).

117. Bales, T. T. and Manning, C. R. Jr. "A Preliminary Study of the Solid-State Bonding of Thoria Dispersion Strengthened Nickel," paper presented by NASA/Langley at Eighth Refractory Composites Working Group (January 14-16, 1964).