FACILITY FORM 602

N66-19691	
(ACCESSION NUMBER)	(THRU)
123	1
(PAGES)	(CODE)
	14
(NASA CR OR TMX OR AD NUMBER)	(CATEGORY)

GPO PRICE $ _____

CFSTI PRICE(S) $ _____

Hard copy (HC) 4.00

Microfiche (MF) 1.00

ff 653 July 65

GENERAL DYNAMICS

Convair Division

A2136-1 (REV. 5-65)

NASA CR#54878
GDC-BJB65-008

NASA

PRELIMINARY DESIGN STUDY, OXIDIZER TANK HELIUM PRESSURE REGULATOR, FLOX-ATLAS, AIRBORNE

BY

D. L. GRAY, D. E. HOWARD AND A. M. COLVIN

PREPARED FOR

NATIONAL AERONAUTICS AND SPACE ADMINISTRATION

CONTRACT NAS 3-3245

GENERAL DYNAMICS
Convair Division

"NOTICE

This report was prepared as an account of Government sponsored work. Neither the United States, nor the National Aeronautics and Space Administration (NASA), nor any person acting on behalf of NASA:

A.) Makes any warranty or representation, expressed or implied, with respect to the accuracy, completeness, or usefulness of the information contained in this report, or that the use of any information, apparatus, method, or process disclosed in this report may not infringe privately owned rights; or

B.) Assumes any liabilities with respect to the use of, or for damages resulting from the use of any information, apparatus, method or process disclosed in this report.

As used above, 'person acting on behalf of NASA' includes any employee or contractor of NASA, or employee of such contractor, to the extent that such employee or contractor of NASA, or employee of such contractor prepares, disseminates, or provides access to, any information pursuant to his employment or contract with NASA, or his employment with such contractor."

Requests for copies of this report should be referred to:

National Aeronautics and Space Administration
Office of Scientific and Technical Information
Attention: AFSS-A
Washington, D.C. 20546

CR 54878
Report No. : GD/C-BJB65-008
Date : 9/24/65
No of Pages:

PRELIMINARY DESIGN STUDY

OXIDIZER TANK HELIUM PRESSURE REGULATOR

FLOX-ATLAS, AIRBORNE

FINAL REPORT

GD/C-BJB65-008

24 SEPTEMBER 1965

CONTRACT NO. NAS 3-3245

TASK ORDER NUMBER 4

NASA/LeRC

Prepared by: D. E. Howard
D. E. Howard
Sr. Design Engineer

Prepared by: R. K. Johanson
R. K. Johanson
Sr. Design Engineer

Approved by: D. L. Gray
D. L. Gray
Sr. Design Engineer

Approved by: D. L. Hobart
D. L. Hobart
Design Group Engineer

Approved by: W. A. Roberts
W. A. Roberts
Ass't Project Engineer
FLOX

FOREWORD

This report has been prepared and published in accordance with the requirements of NASA Contract NAS 3-3245, Task Order Number 4. The report presents the results of the preliminary design study funded by this contract Task Order Number 4 and Change Order Number 1.

A state of the art survey was made at the beginning of the study. Reports of previous efforts to design and develop high temperature regulators were studied and, in most cases, personal contact was made with the engineers who worked on the project. Various companies were visited for pertinent reasons associated with pressure regulators.

ABSTRACT

19691

Four design approaches were successively pursued for the FLOX Atlas regulator. The first two designs contained unique features which lent themselves to a direct acting regulator. As it became increasingly apparent that some means of amplification would be required, these approaches were abandoned. The third approach contained more sophisticated features which provided the force amplification necessary to achieve the designed accuracy and still maintained the regulators physical size within reasonable parameters. The fourth approach incorporated further improvements over the third, and fulfilled the design requirements.

The most important features of the design are as follows:

1. Certain sections, such as the shutoff valve, were taken from existing designs which have been fully developed.

2. For stable operation, a device is incorporated to change the regulation gain when inlet pressure decreases to 2000 psi.

3. The gain change device also accomplishes a programmed pressure change in tank pressure.

4. No dynamic seals are used.

5. Leakage is reduced by assembling the high pressure components from the lower pressure side.

6. All shutoff functions and desired low leakage paths incorporate poppet-type devices.

author

INTRODUCTION

The preliminary design study described herein is an initial step toward providing a qualified oxidizer tank pressure regulator compatible with FLOX. Four different designs were considered and the approaches were deliberately centered around the proven principles of the present Atlas tank pressure regulators.

The selected design incorporates a controller and actuator to provide the metering valve actuation force. Metal to metal poppets and seats, bellows, and metal static seals are used to meet leakage requirements. The regulator is designed for installation in the interstage adapter within the Atlas/Centaur clearance envelope. No external sensing line is required and the overboard bleed from the sensing controller is assumed to be vented into the boil-off valve vent duct.

The design incorporates a feature to program tank pressure low during the first 20 seconds of flight by an inlet pressure operated controller. The main shut-off valve poppet remains closed until inlet pressure decreases to approximately 2000 PSIG. At higher inlet pressures, when the tank ullage is small, a small flow passage is provided for the gas flow to the tank.

Lubricants and cadmium plating are not used in the design.

The following personnel were contacted during the study effort and were particularly helpful.

R. L. Kenyon	Parker Aircraft Company	Los Angeles, Calif.
F. Orona	Fluidgenics	National City, Calif.
R. M. Hamilton	Robertshaw	Anaheim, Calif.
N. Woolgar	B. H. Hadley, Inc.	Pomona, Calif.
B. Hadley	Demcor, Inc.	Claremont, Calif.
R. Smith	STL	El Segundo, Calif.
G. Armstrong	Servonics	Costa Mesa, Calif.

CONTENTS

	Page
FOREWORD	i
ABSTRACT	ii
INTRODUCTION	iii
I. DESIGN REQUIREMENTS	1
1. Pressure History	1
2. Design Parameters	1
3. Flow Rate	1
4. Flow Area	5
5. Reference Pressure	5
6. Dynamic Considerations	5
II. CONCEPT EVOLUTION	12
1. Fixed Orifice	12
2. Design A	12
3. Design B	15
4. Design C	17
5. Design D	19
III. DESIGN CALCULATIONS	22
1. Shut Off Valve, Valve 'A' and Primary Valve	22
2. Metering Valve	28
3. Metering Valve Actuator	29
4. Actuator Orifice and Sensing Controller	32
5. Sequencing Valve and Spring	38
6. Flow Limiter	40
7. Reference Pressure Calculations	46
8. Fixed Orifice Calculations	47
9. Analysis of a Direct Acting Regulator	49
REFERENCES	50

CONTENTS (continued)

ATTACHMENTS

1. Design Review Report #696-2-3245-101, FLOX Regulator

2. Performance Specification Oxidizer Tank Helium Pressure Regulator for a FLOX-Atlas Vehicle

3. Test Requirements Oxidizer Tank Helium Pressure Regulator for a FLOX-Atlas Vehicle

I. DESIGN REQUIREMENTS

1. Pressure History

The upper and lower limit curves in Figure 1 consider all the factors affecting the LOX tank pressurization requirements of an Atlas-Centaur vehicle. The curves are subject to changes as noted, because of the influence of factors such as hoop stress, axial support, bending moment, propellant pump net positive suction head and, vehicle bulkhead differential pressure.

The upper limit pressure curve spike-down at lift-off is caused by differential pressure transients on the tank bulkhead. Programming LOX tank pressure during lift-off raises the differential pressure to a more advantageous value. The design pressure curve was arbitrarily chosen approximately mid-way between the upper and lower limits. Figure 1 curves are subject to change dependent on the final configuration of a FLOX-Atlas vehicle. The AGE (ground) pressurization system could be set to pressurize the oxidizer ullage at any pressure between 24 PSIG and 31 PSIG. 24 PSIG was selected. This pressure setting is subject to change dependent on the airborne regulator engine start pressure transients.

2. Design Parameters

The inlet temperature to the regulator, shown in Figure 2, is a representative profile of Atlas-Centaur data. It is, however, somewhat conservative in that the actual temperature is 50°F to 100°F lower during most of the flight.

The inlet pressure curve was obtained from the supply pressure data for missile 55D flight (Figure 12 of Ref. 2). Since the pressure at booster engine cut-off (BECO) for this flight was higher than the design requirement of 75 PSIG, the inlet pressure curve was extrapolated to correspond to 75 PSIG at 142 seconds of flight.

3. Flow Rate

Flow rate data was obtained from missile 55D flight data (Figure 16 of Ref. 2). The rate established for missile 55D was proportioned in accordance with the difference between the proposed design pressures and those of 55D, to obtain figure 3 from points "B" to "C" and "F" to BECO. The constant flow rate from "D" to "E" (tank pressure rising, figure 1) is accomplished by the flow limiting feature of the regulator.

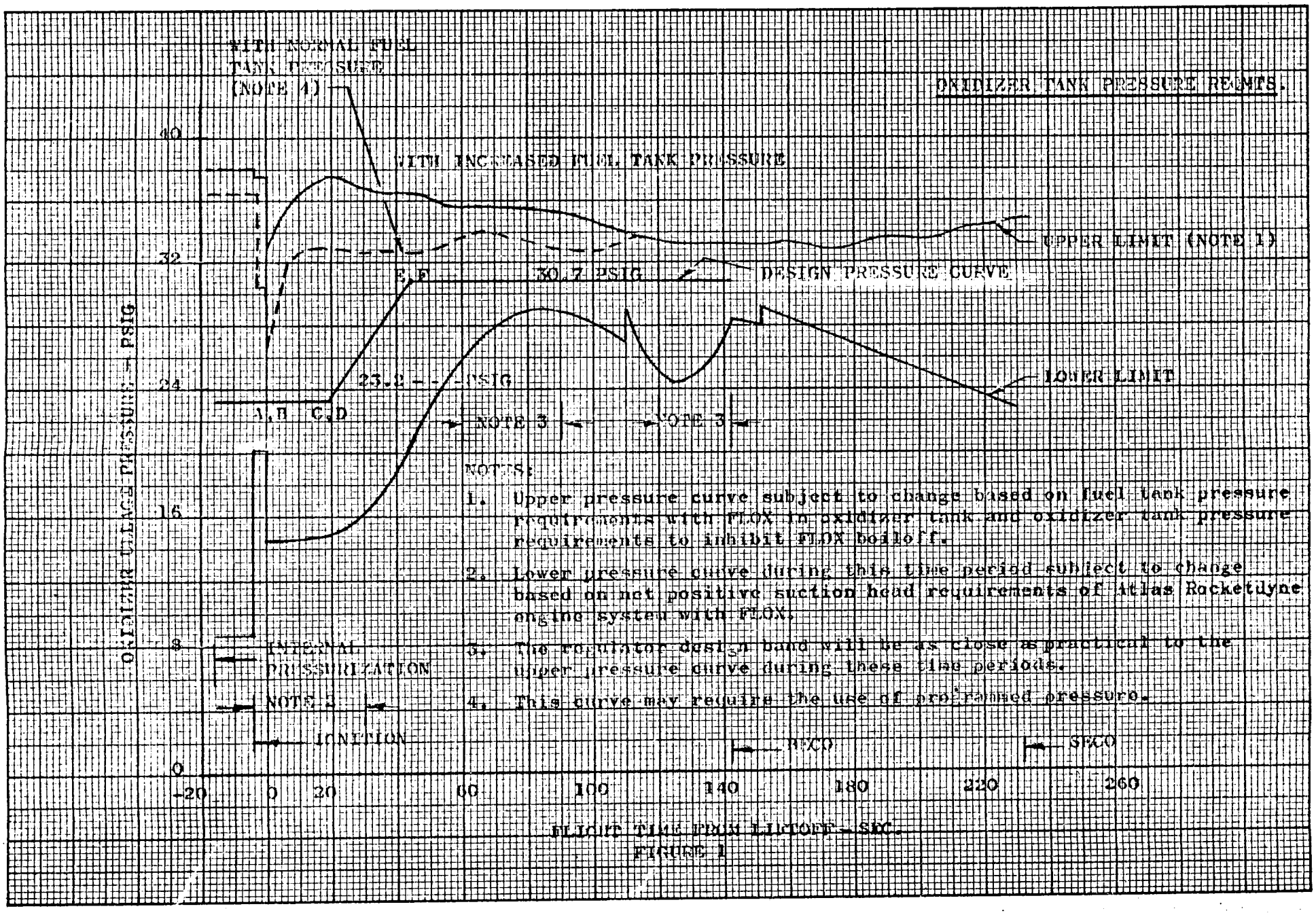

NOTES:

1. Upper pressure curve subject to change based on fuel tank pressure requirements with FLOX in oxidizer tank and oxidizer tank pressure requirements to inhibit FLOX boiloff.
2. Lower pressure curve during this time period subject to change based on net positive suction head requirements of Atlas Rocketdyne engine system with FLOX.
3. The regulator design band will be as close as practical to the upper pressure curve during these time periods.
4. This curve may require the use of programmed pressure.

FIGURE 1

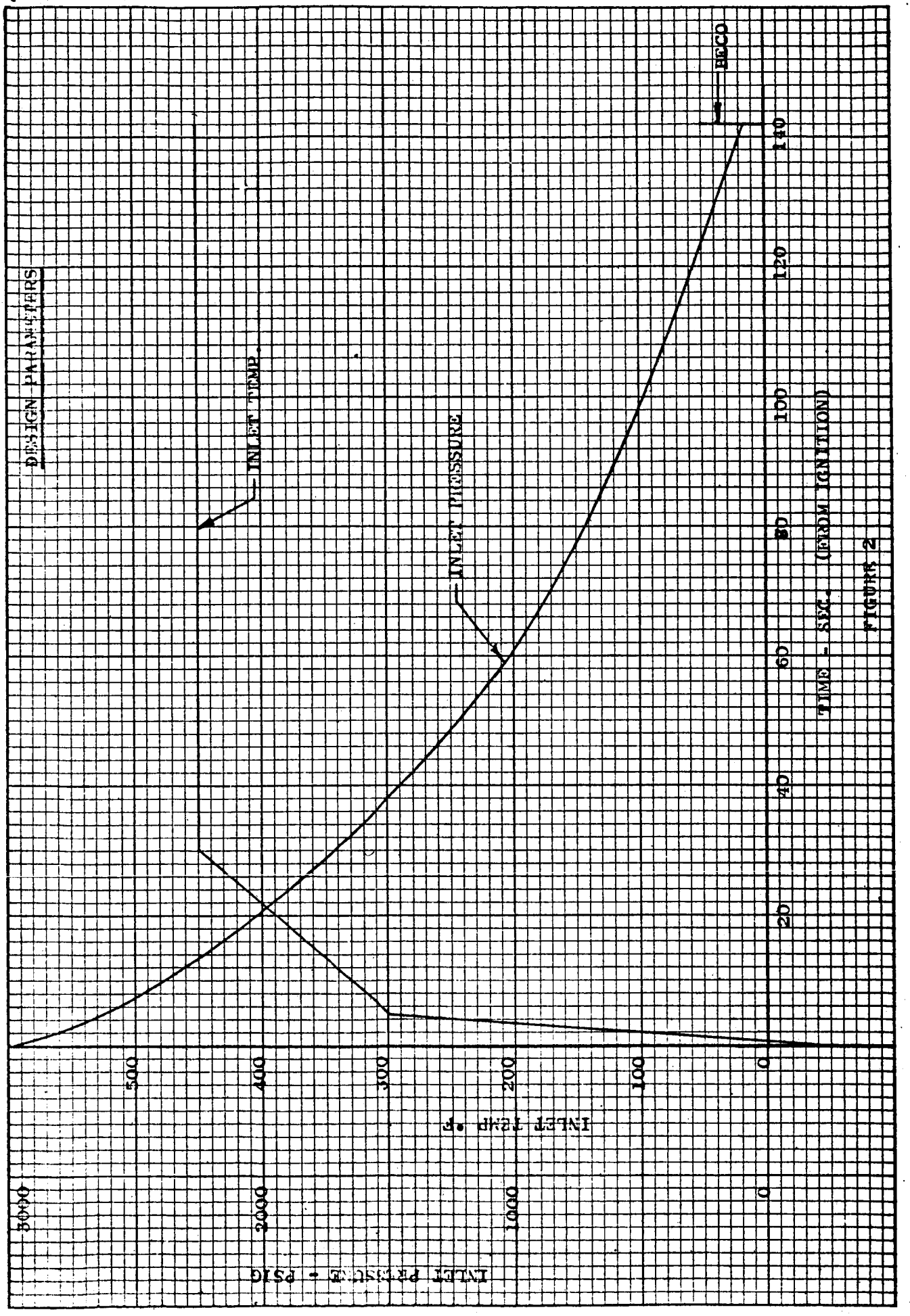

FIGURE 2

K+E 10 X 10 TO THE INCH 359T-5
KEUFFEL & ESSER CO. MADE IN U.S.A.
ALBANENE ®

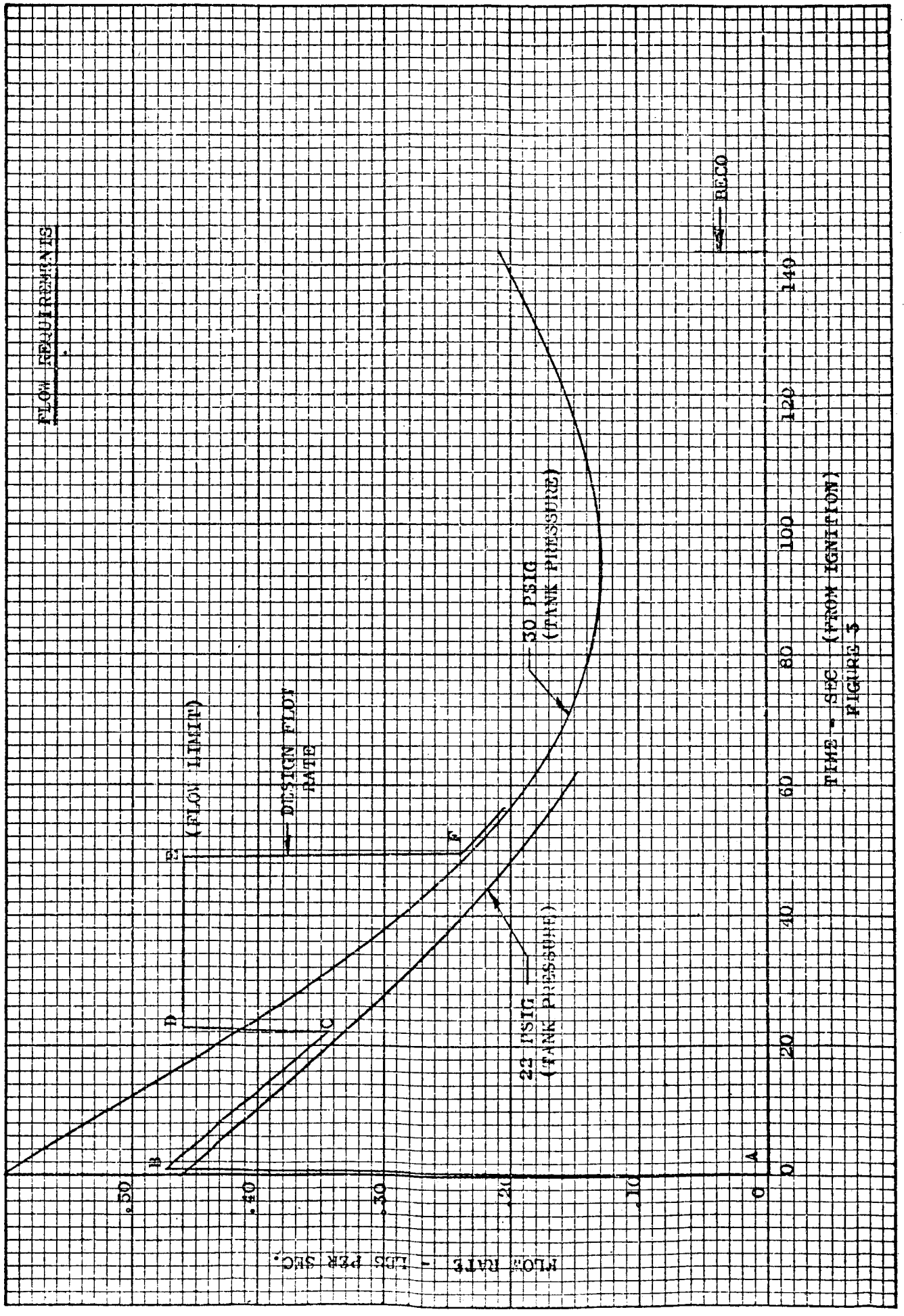

FIGURE 3

KEUFFEL & ESSER CO. ALBANENE ® MADE IN U.S.A.

I. DESIGN REQUIREMENTS (continued)

4. Flow Area

The required design flow area curve is shown in Figure 4. This curve demonstrates the need for flow limiting capability. The small area required at engine start is due to high helium inlet pressure and low temperature. The large area required at BECO is due to low helium inlet pressure and high temperature. Flow limiting is incorporated to prevent a failure, such as a ruptured sensing bellows when the tank ullage volume is small, from pressurizing the tank at a rate beyond the capacity of protective devices.

5. Reference Pressure

The oxidizer tank pressure regulator will be installed in the interstage adapter. The fuel tank pressure regulator will remain in the booster thrust section. This introduces a reference pressure variable affecting the intermediate bulkhead differential pressure. Figures 5 and 6 show the relationship of the two reference pressures. This relationship causes an increase in the bulkhead differential pressure.

Figures 7 and 8, show that the interstage adapter pressure is less than the free stream pressure. This difference in pressure will cause a decrease in the differential pressure across the oxidizer tank skin. This condition requires further study and must be considered in the design of the FLOX-Atlas tank skins.

6. Dynamic Considerations

On previous Atlas vehicle designs, the LO_2 tank pressurization system utilized a 65 foot sensing line to deliver ullage pressure intelligence to the regulator. In the FLOX-Atlas regulator design of this study, the regulator is located above the oxidizer tank, instead of in the thrust section. This reduces the delivery duct and sensing line lengths to essentially zero. The phase shift contribution from these elements to the control loop is thereby eliminated, representing a substantial improvement over previous designs.

To further improve pneumatic system stability, additional work was performed. A mathematical model was developed and analyzed dynamically (Ref. 5). It was determined that pneumatic system instability coupled with the vehicle structure, can be reduced by two dynamic control techniques as follows:

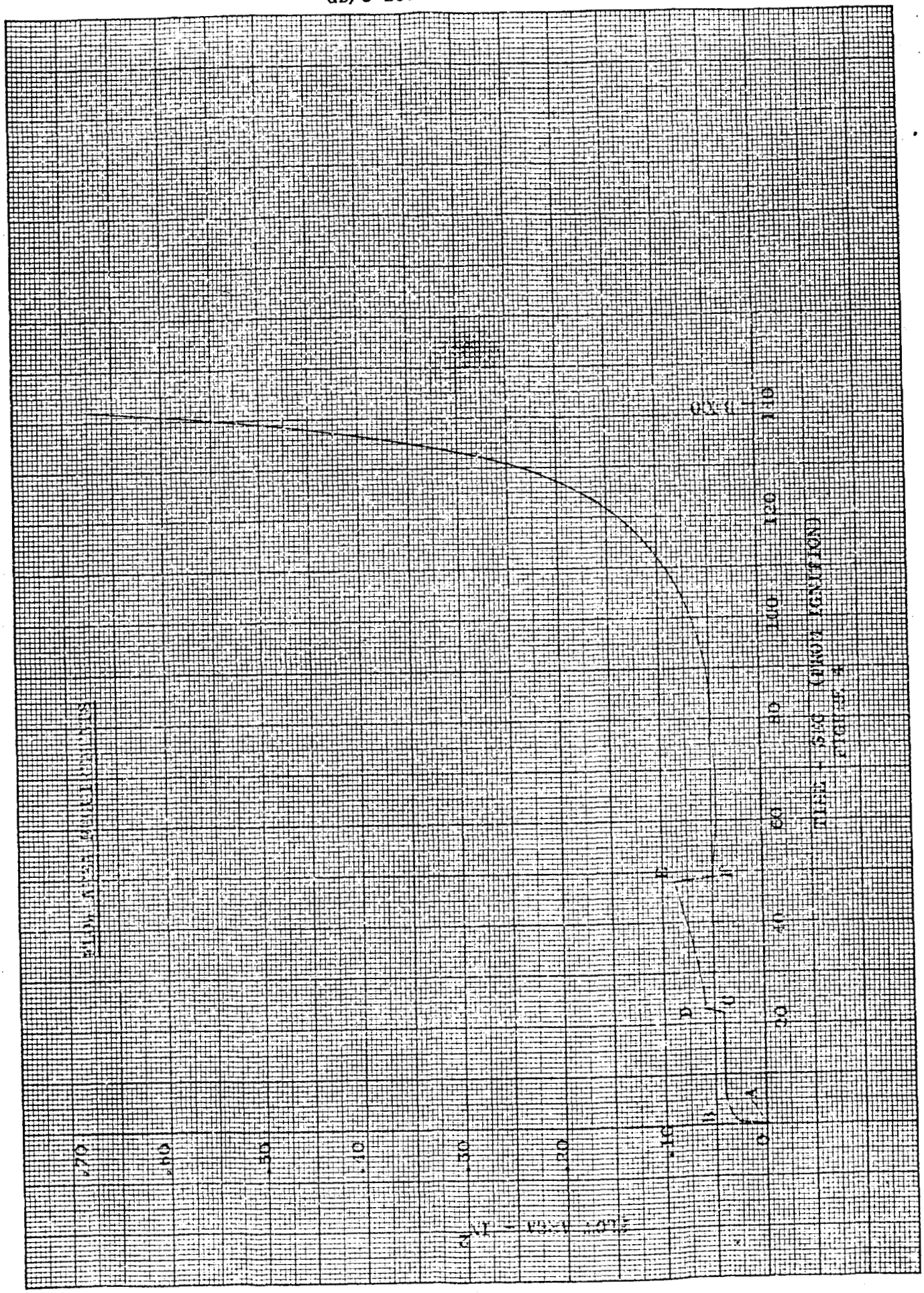
.70
.60
.50
.40
.30
.20
.10
.16
0
20
40
60
80
100
120
140
A
B
C
D
E

K+E 10 X 10 TO THE INCH 359T-5
KEUFFEL & ESSER CO. MADE IN U.S.A.
ALBANENE ®

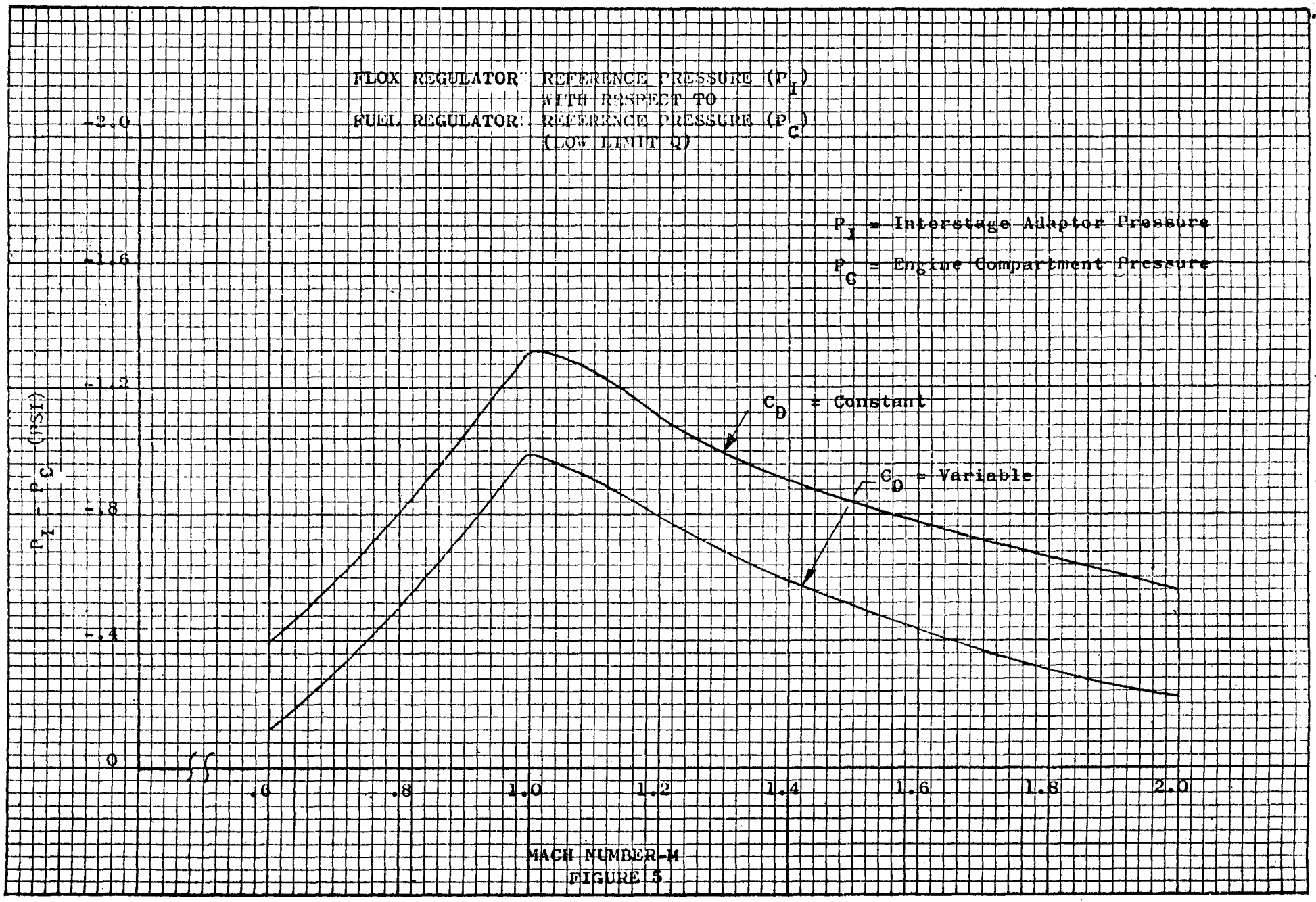

FIGURE 5

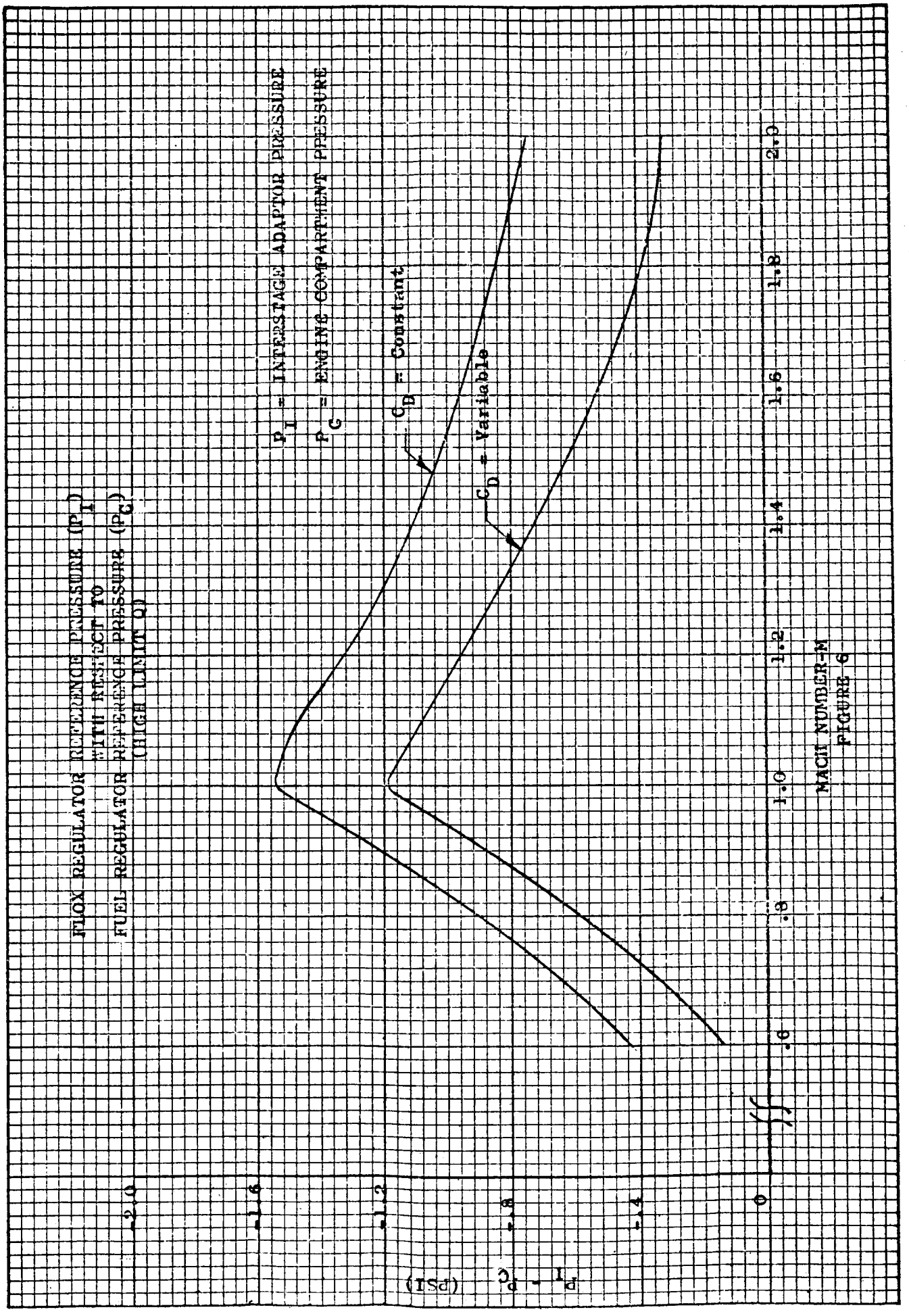
FLOX REGULATOR REFERENCE PRESSURE (P_I)
WITH RESPECT TO
FUEL REGULATOR REFERENCE PRESSURE (P_C)
(HIGH LIMIT Q)
P_I = INTERSTAGE ADAPTOR PRESSURE
P_C = ENGINE COMPARTMENT PRESSURE
C_D = Constant
C_D = Variable
-2.0
-1.6
-1.2
-.8
-.4
0
.6
.8
1.0
1.2
1.4
1.6
1.8
2.0
MACH NUMBER-M
$P_I - P_C$ (PSI)

FIGURE 6

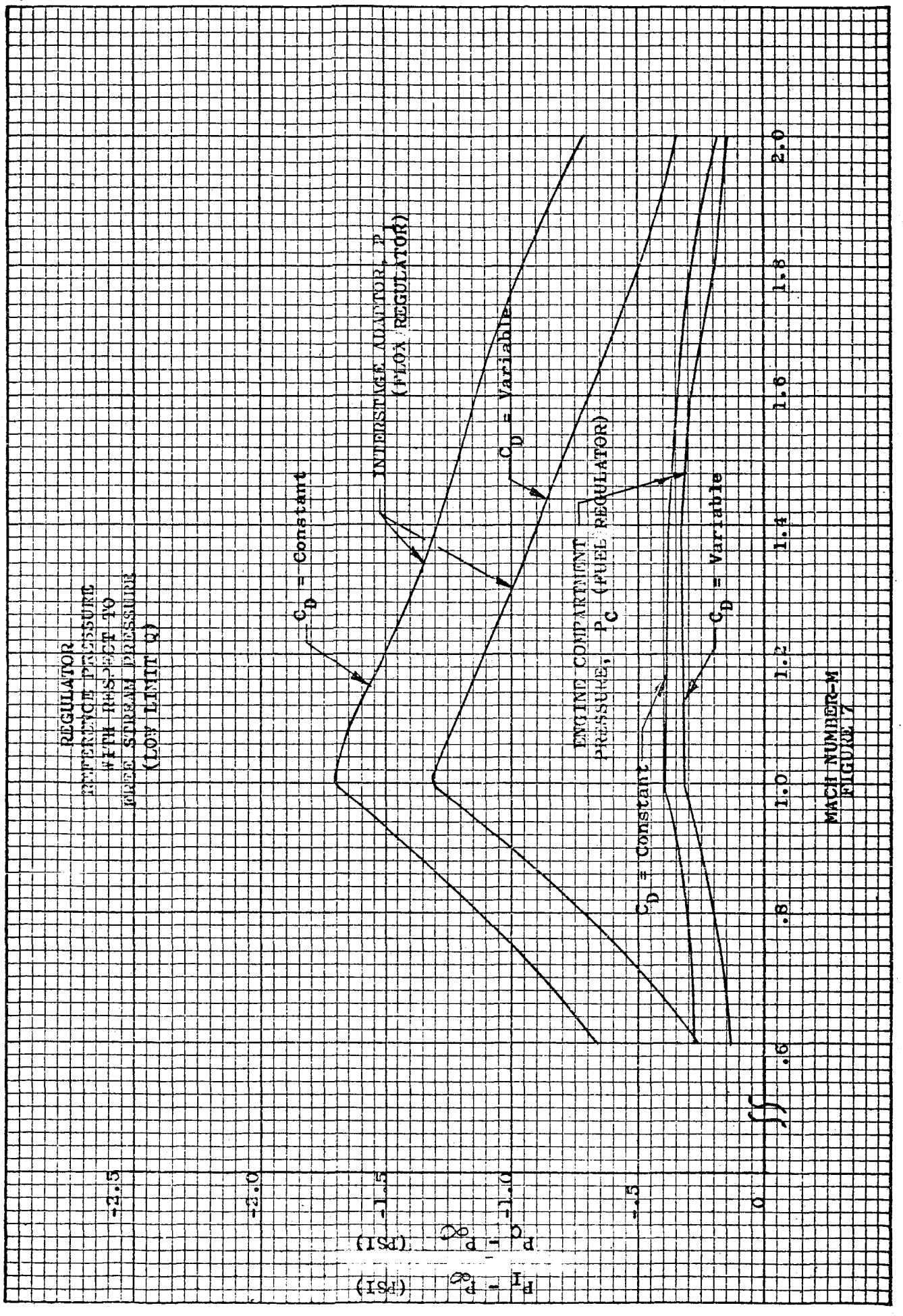

K+E 10 X 10 TO THE INCH 359T-5
KEUFFEL & ESSER CO. MADE IN U.S.A.
ALBANENE ®

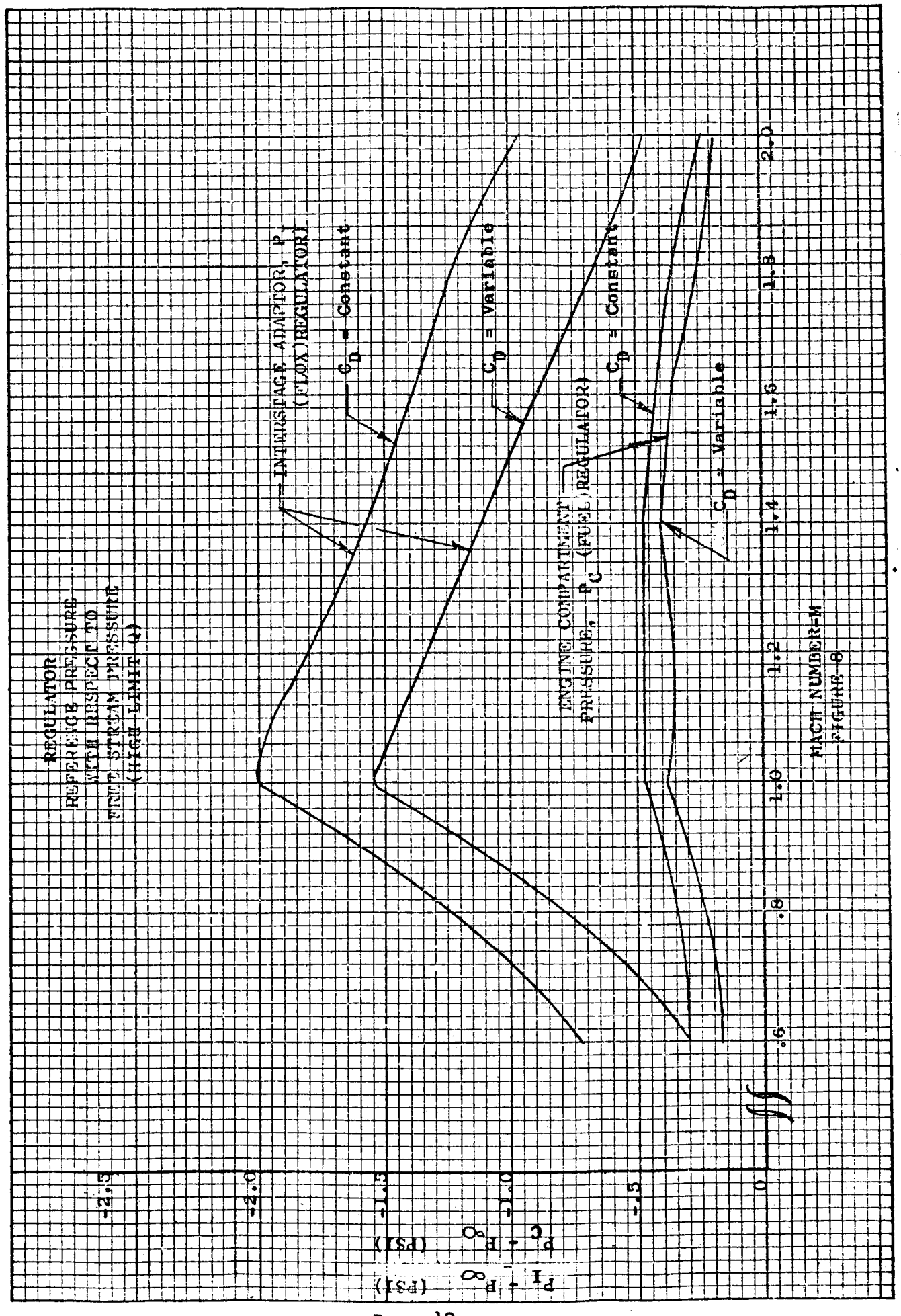
REGULATOR
REFERENCE PRESSURE
WITH RESPECT TO
FREE STREAM PRESSURE
(HIGH LIMIT R)
INTERSTAGE ADAPTOR, P_I
(LOX) REGULATOR)
C_D = Constant
C_D = Variable
ENGINE COMPARTMENT
PRESSURE, P_C (FUEL) REGULATOR)
C_D = Constant
C_D = Variable
$P_I - P_\infty$ (PSI)
$P_C - P_\infty$ (PSI)
-2.5
-2.0
-1.5
-1.0
-.5
0
.6
.8
1.0
1.2
1.4
1.6
1.8
2.0
MACH NUMBER-M

FIGURE 8

I. DESIGN REQUIREMENTS (continued)

6. Dynamic Considerations (continued)

(1) Induce a low regulator gain for the first part of flight, when the tank ullage is small, and then increase to the higher gain requirement.

(2) Use a pneumatic lead-lag network to add dynamic compensation and provide high steady-state accuracy and stability to the regulator.

The first of these items has been incorporated into the preliminary regulator design. The sequencing valve (Figure 13) maintains the flow area relatively small until the system can tolerate a higher gain. Then, the main flow passages are made available for flow as required.

The second item was considered in the design, however, if stability problems occur, additional compensation may be required.

II. CONCEPT EVOLUTION

1. Fixed Orifice

A fixed orifice was considered for both programming pressure and minimizing tank pressure oscillations immediately after lift-off. Figure 9 shows that this approach is not practical. A relatively small change in orifice area results in a large difference in tank pressure with time. A rapid decrease in tank pressure occurs with a .020 in^2 orifice and an increase at ignition occurs with a .035 in^2 orifice. Tolerances on internal parts and all other factors could decrease tank pressure below that required for adequate propellant pump net positive suction head (NPSH).

2. Design A

Design 'A' (Figure 10), was an attempt to refine the fixed orifice approach. The key element is a bourdon tube helically wound around a drum. The drum is free to turn and the tube is attached to the periphery of the drum near the end. The fixed end of the tube is attached to the regulator body and is pressurized from inlet pressure. High inlet pressure rotates the tube and drum in the direction to unwind the tube. As inlet pressure decreases, the tube rotates the drum toward the tube's unpressurized position. The metering valve shaft, attached to the metering valve piston, moves back and forth axially inside the drum during the metering operation. A pin through the shaft engages a slot in the drum in such a way, that; as the metering valve moves back and forth, the pin moves freely in the groove. Rotation of the drum and groove rotates the metering valve at the same time without interfering with the reciprocating motion of the piston. The metering valve in the high inlet pressure position, is rotated so that grooves in the piston partially align with slots in the cylinder. When the piston is moved back and forth, narrow slots are opened or closed. As inlet pressure decreases, the piston rotates and the grooves and slots become more closely aligned. The same reciprocating motion of the piston under these conditions, exposes more flow area and the mass flow rate can be maintained in spite of the decrease in inlet pressure.

Work on this system seemed promising; however, information regarding torque generated by a bourdon tube system conflicted and large inaccuracies in calculated empirical data were expected. Also, the force required for direct acting axial motion of the piston was later proved to be impractical, unless some means of force amplification was provided.

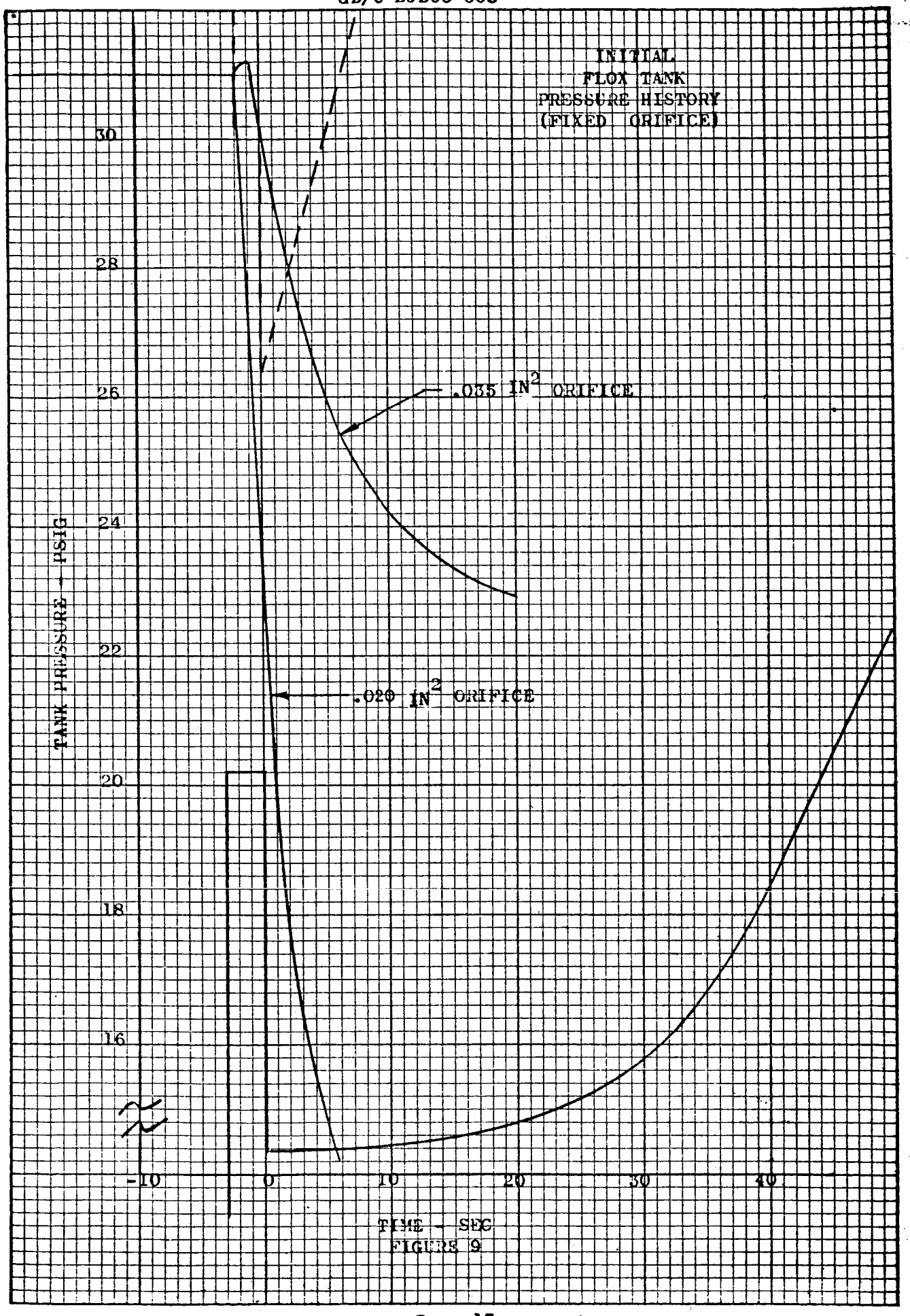
INITIAL
FLOX TANK
PRESSURE HISTORY
(FIXED ORIFICE)
.035 IN^2 ORIFICE
.020 IN^2 ORIFICE
TANK PRESSURE - PSIG
30
28
26
24
22
20
18
16
-10
0
10
20
30
40
TIME - SEC

FIGURE 9

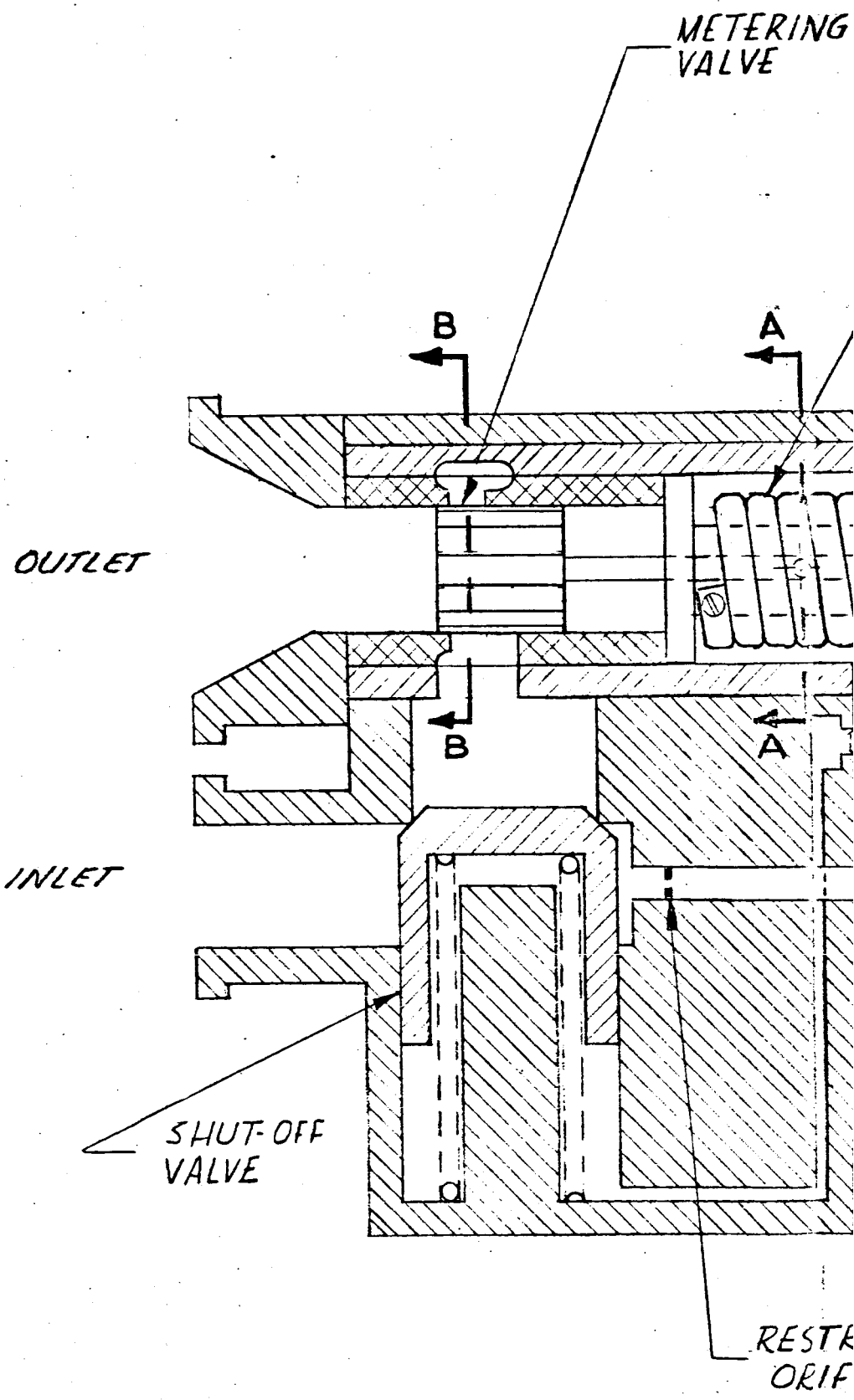
METERING VALVE
B
A
OUTLET
B
A
INLET
SHUT-OFF VALVE
RESTR
ORIF

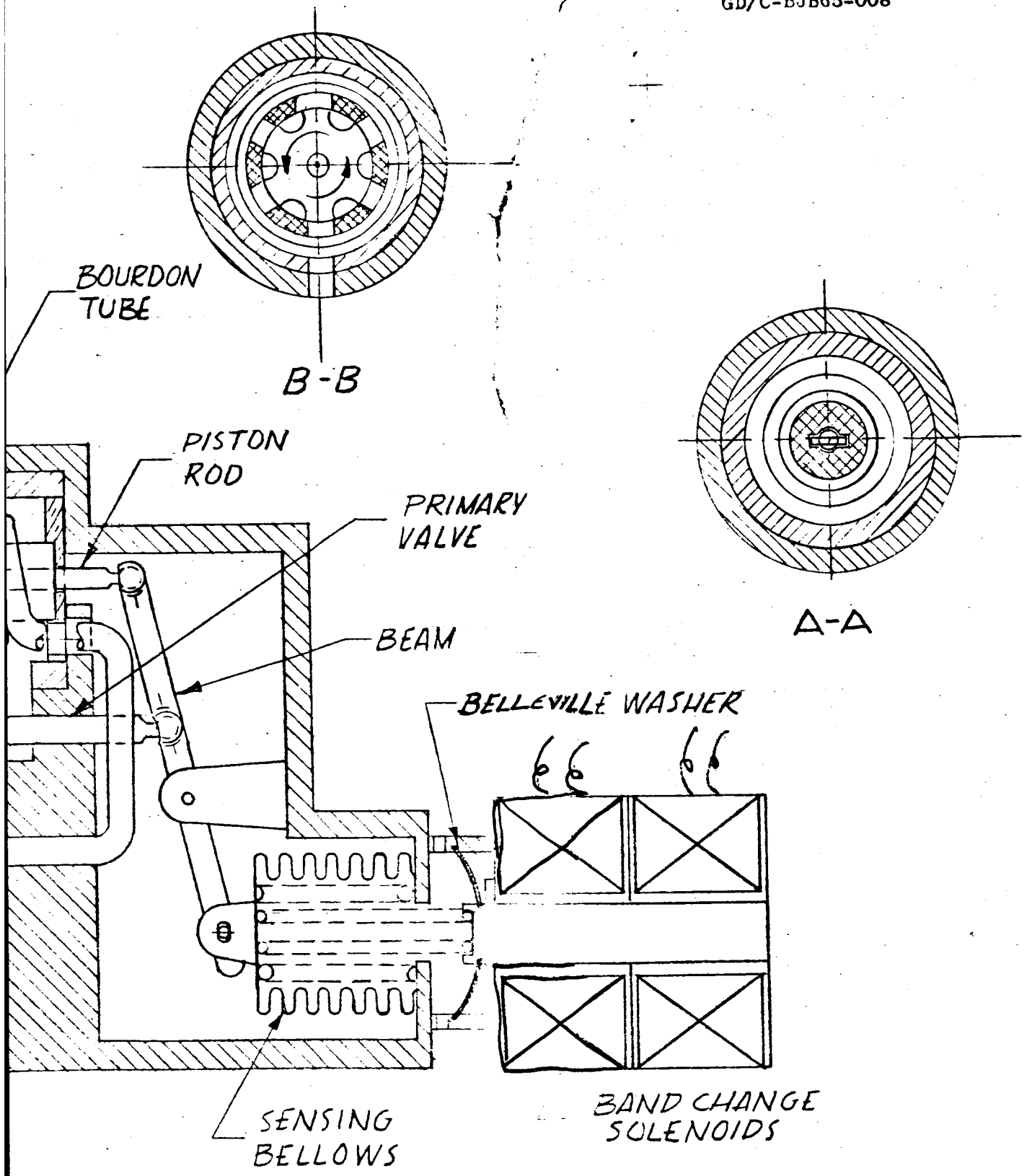

RICTING
ICE

SCHEMATIC "A"
PRESSURE REGULATOR
FLOX TANK

FIGURE 10

II. CONCEPT EVOLUTION (continued)

3. Design B

Design 'B' figure 11 is similar to design 'A' in that a small area slot is used for gas flow under high inlet pressure conditions and larger area slots are used for flow at lower inlet pressure. The 'B' design, instead of rotating the piston, uses one small slot exclusively for high pressure flow. After inlet pressure decreases to a predetermined value, the gas is then supplied to the large slots. The main shutoff valve is used to supply gas only to the large flow area. A valve, by-passing the main shut-off valve, supplies gas to the small slot and also prevents the main poppet from opening until inlet pressure decreases to 2000 psi. The main shut-off valve poppet is held closed by inlet pressure flowing to the backside of the valve. When the gas behind the poppet is vented, inlet pressure acting on the poppet face opens the valve. A by-pass valve, open above 2000 psi, supplies gas to the small slot and the main shut-off valve remains closed. At 2000 psi, the by-pass valve closes and the gas behind the main poppet is vented thru the small slot allowing the main valve to open.

Both designs 'A' and 'B' use a lever system to position the metering valve. A balanced beam is designed to cancel acceleration forces.

It was originally assumed that acceptable ratios of force and stroke could be obtained for the metering valve to maintain tank pressure within specified pressure bands. However, calculations reveal that a direct acting system is not practical. (See analysis of a Direct Acting Regulator Sect. III, para. 9.)

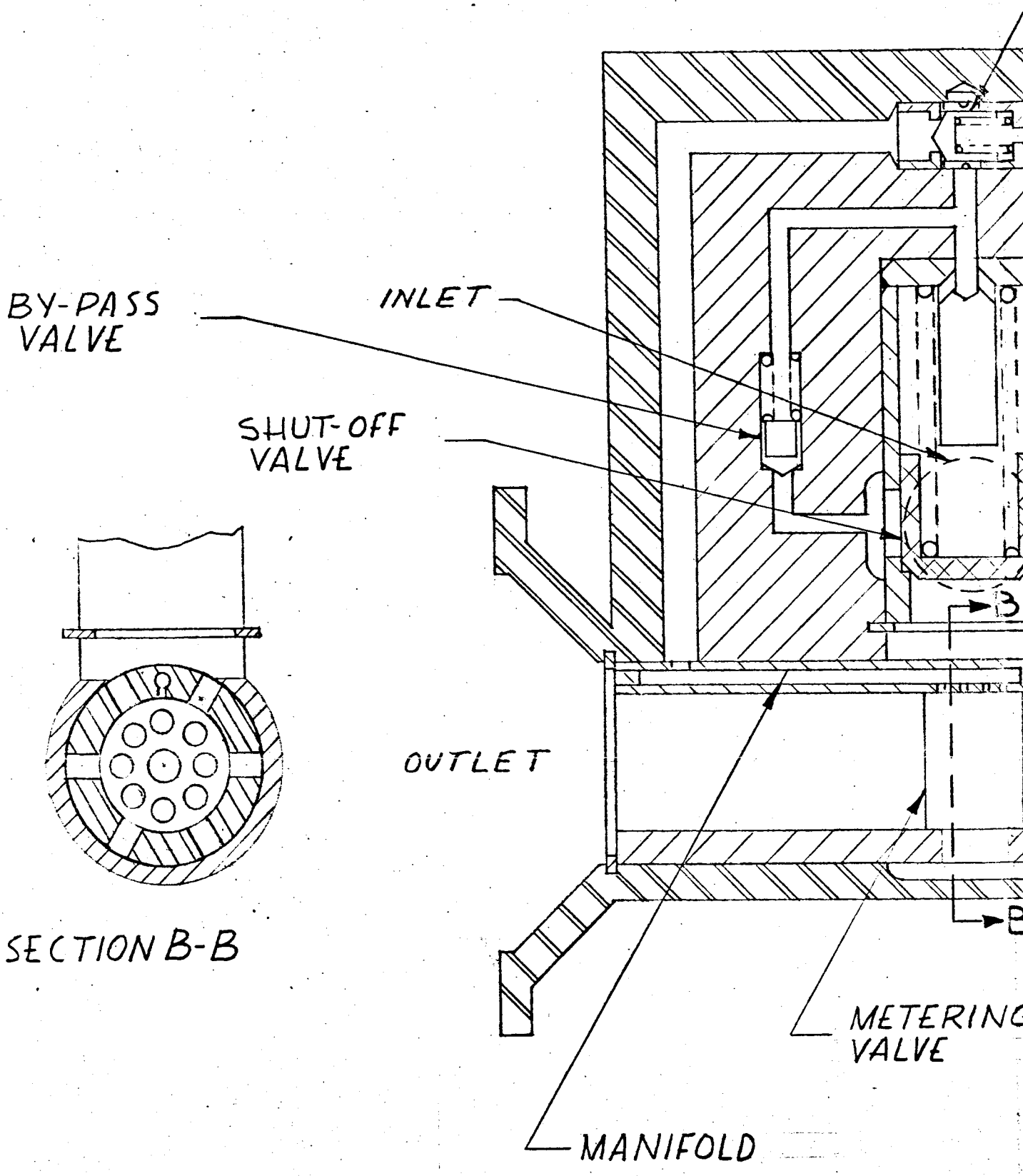
BY-PASS VALVE
INLET
SHUT-OFF VALVE
OUTLET
SECTION B-B
METERING VALVE
MANIFOLD

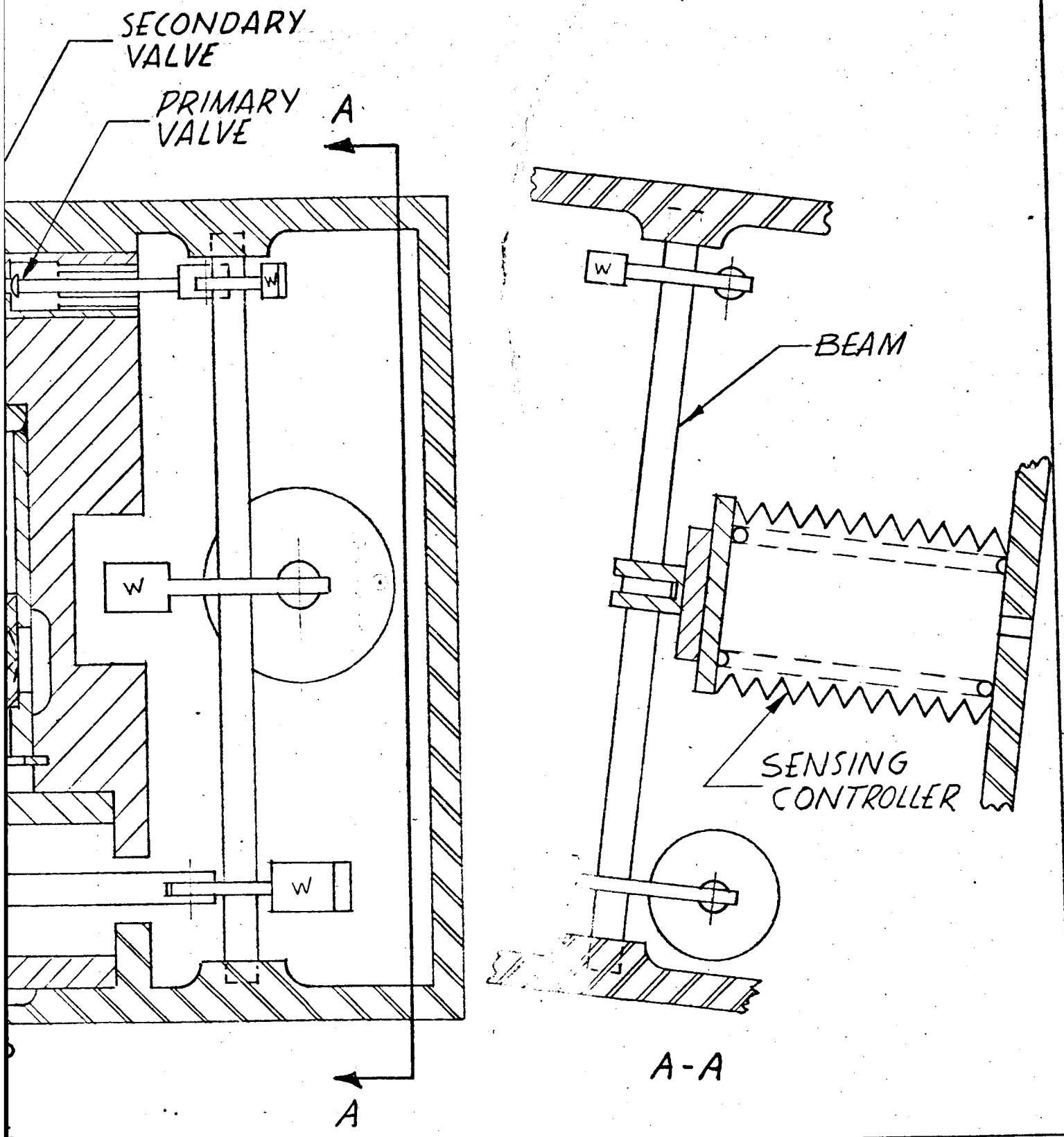

SCHEMATIC "B"
PRESSURE REGULATOR
FLOX TANK

FIGURE 11

2

II. CONCEPT EVOLUTION (continued)

4. Design C

Design 'C' (Figure 12), incorporates a tank pressure sensing element which varies the pressure inside an actuator bellows and positions a valve in proportion to that pressure. Small changes in sensed pressure result in large changes in the force generated to move the valve. Tank pressure flows to the inside of the actuator bellows thru an orifice and the sensing valve controls the pressure within the actuator by varying the amount of gas vented to atmosphere. The present Atlas regulator has a shut-off valve for low lock-up leakage and a pressure balanced valve (metering valve) for accurate pressure control. The decision was made to use this concept for this study because of excellent past performance and FLOX compatibility of metal to metal poppets and seats.

The shut-off valve is held closed by a spring and inlet pressure bleeding thru the poppet and cylinder diametrical clearance to the back side of the poppet. When the pressure behind the poppet is vented into the tank, the unbalanced inlet pressure force unseats the poppet.

The shutoff valve is held closed by a spring and inlet pressure bleeding through the diametral clearance to the backside of the poppet. When tank pressure decreases, the metering valve opens to increase the gas flow. The primary valve is opened as soon as the metering valve starts to open and the gas behind the shut-off valve is vented into the tank. The shutoff valve opens and the metering valve moves back and forth in response to tank pressure demands. The sequencing valve is actuated to the high pressure position when inlet pressure is applied. In the high pressure position, the sequencing valve energizes the bias spring in the controller and causes the controller to regulate tank pressure at a lower value. When inlet pressure decreases to 2000 psi, the sequencing spring forces the sequencer to move to the low pressure position and the bias force is removed from the controller. Without the bias force, the regulator will regulate at a higher value.

The flow-limiting valve is designed to be a secondary tank pressure sensing element. It senses the pressure upstream of a restricter plate, and becomes the regulation control element when the pressure drop across the restrictor plate becomes abnormally high. The pressure at which the flow-limiter actuates is predetermined and the associated high flow rate would normally indicate a failure of some part.

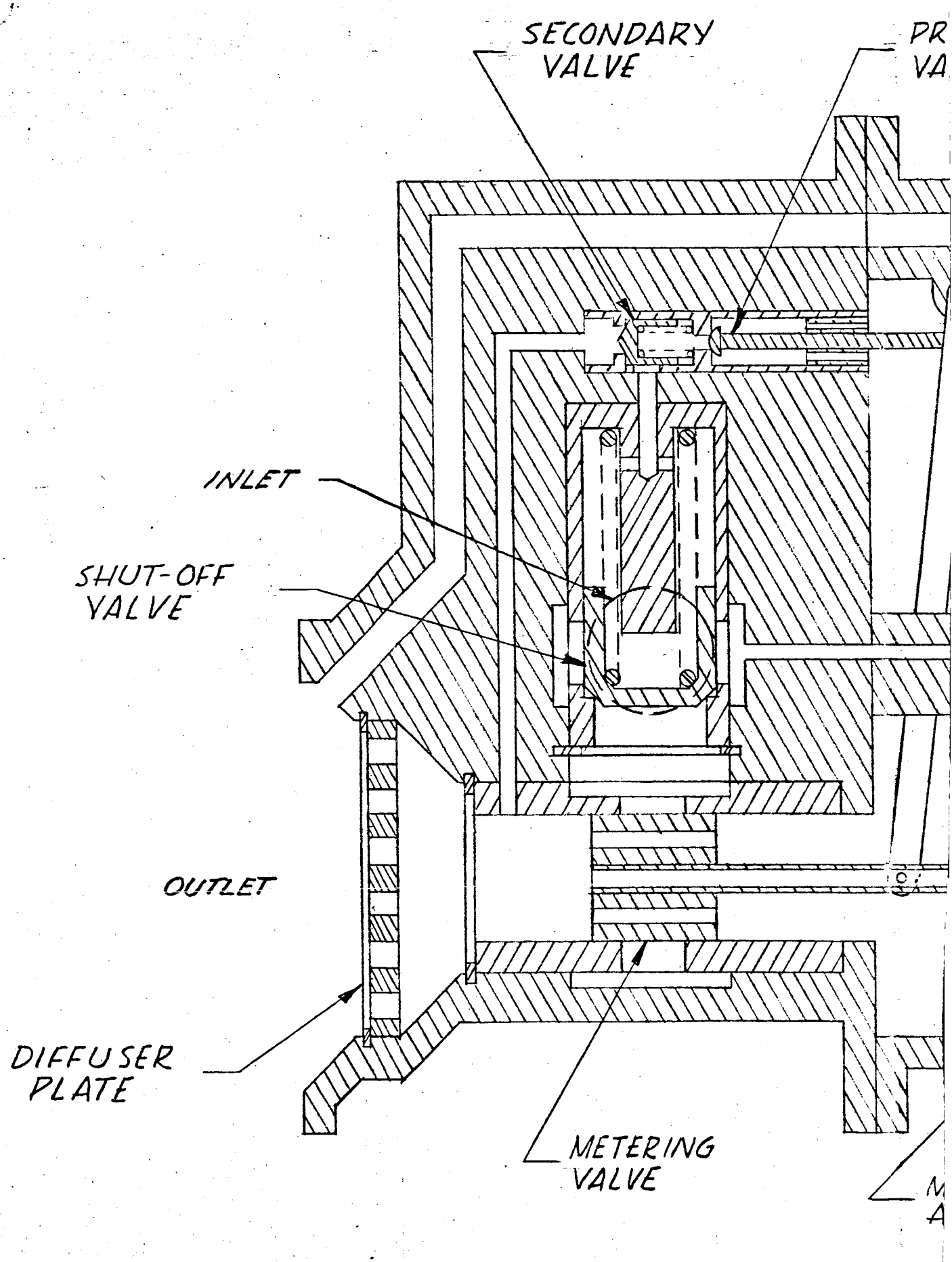
SECONDARY VALVE
PR VA
INLET
SHUT-OFF VALVE
OUTLET
DIFFUSER PLATE
METERING VALVE
M A

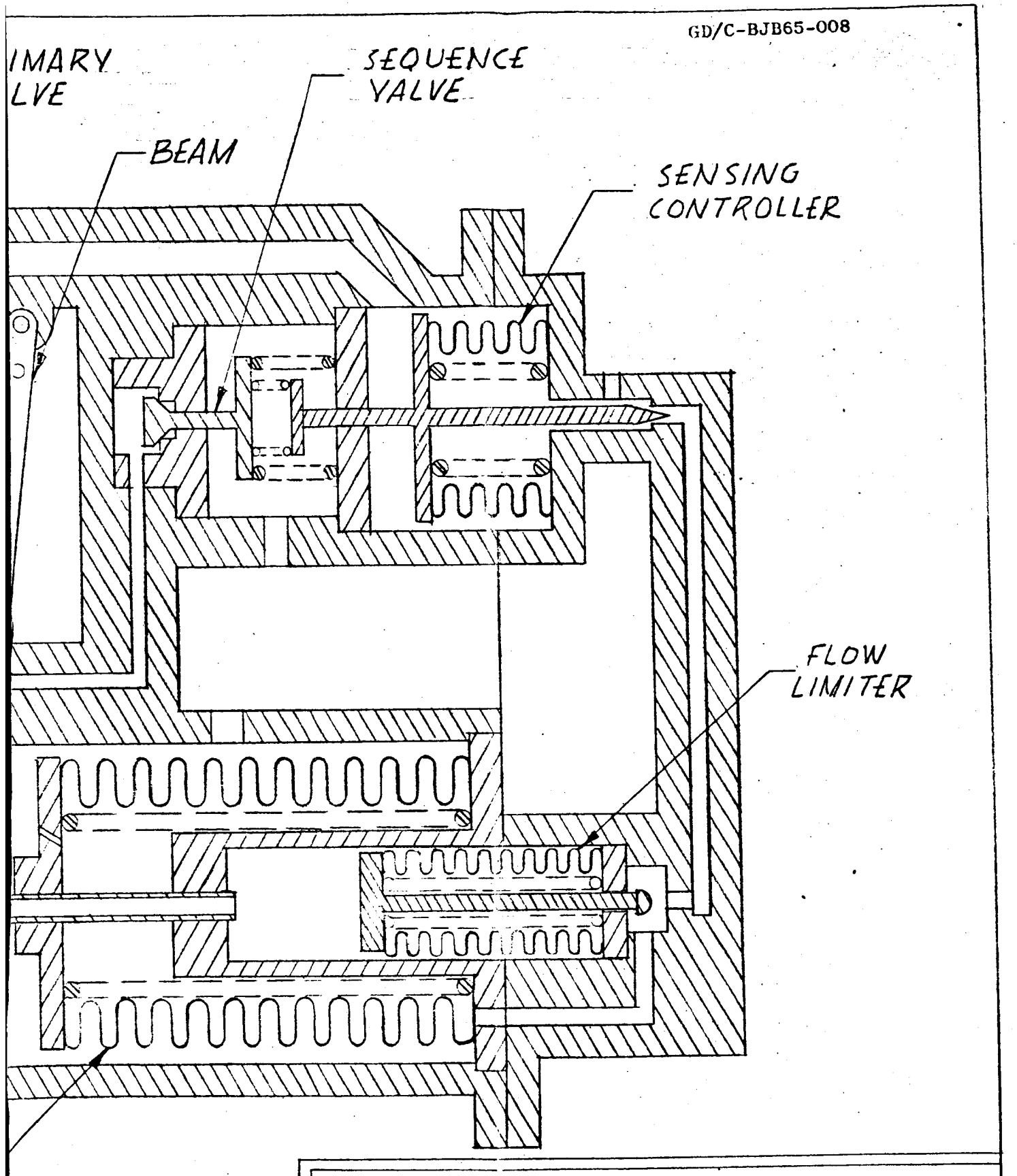

SCHEMATIC "C"
PRESSURE REGULATOR
FLOX TANK

FIGURE 12

II. CONCEPT EVOLUTION (continued)

5. Design D

The selected design (Figures 13 & 14) is, an improved version of design 'C'. The flow-limiter is modified from the 'C' design, into a double seating valve. It acts as part of the flow limiting system in one position and as a bleed shutoff valve in the other position. The latter is in operation only during the standby phase of the vehicle operations. Another change was in a redesign of the sequencing valve. A selector valve and a second valve (valve 'B'), bypassing the shut-off valve, was added. The first bypass valve is referred to as valve 'A'. The redesigned sequencing valve and valve 'B' form a priority system, which, with the proper metering valve slot design, incorporates one of the desirable features of design 'B'. That is, when inlet pressure is applied to the regulator, the shut-off valve is in the closed position. The high inlet pressure causes the sequencing valve to move to the high inlet pressure position, which generates a force on the program spring, resulting in the controller regulating tank pressure at a lower prescribed value. With the sequencing valve in the high inlet pressure position, a lowering of tank pressure opens by-pass valve 'B' by venting the gas behind the poppet. When by-pass valve 'B' opens, inlet pressure is applied to one slot. The actuator moves the metering valve piston back and forth opening and closing the slot to meet tank pressure demands. When inlet pressure reaches 2000 psi, the selector spring forces the sequencing valve to the low inlet pressure position. The primary valve then vents the rear side of both valve 'A' and 'B'. The valve 'A' poppet, when open, vents the main shutoff valve cavity and the shut-off valve opens applying inlet pressure to all the slots. The metering valve then opens and closes the larger slots to meet the demand.

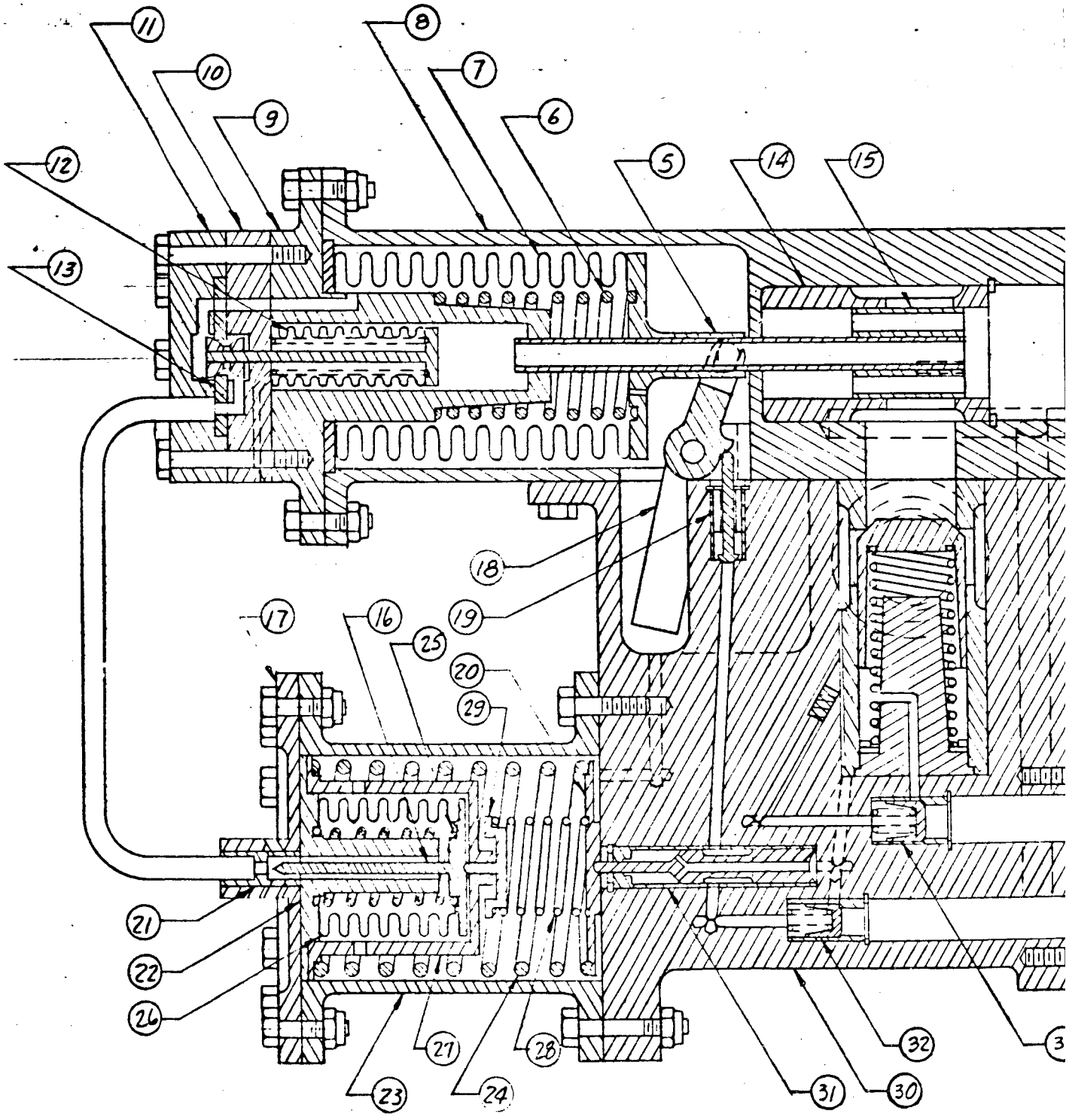
11
10
9
12
13
8
7
6
5
14
15
18
19
17
16
25
20
29
21
22
26
23
24
27
28
31
30
32
3

SECTION A – A

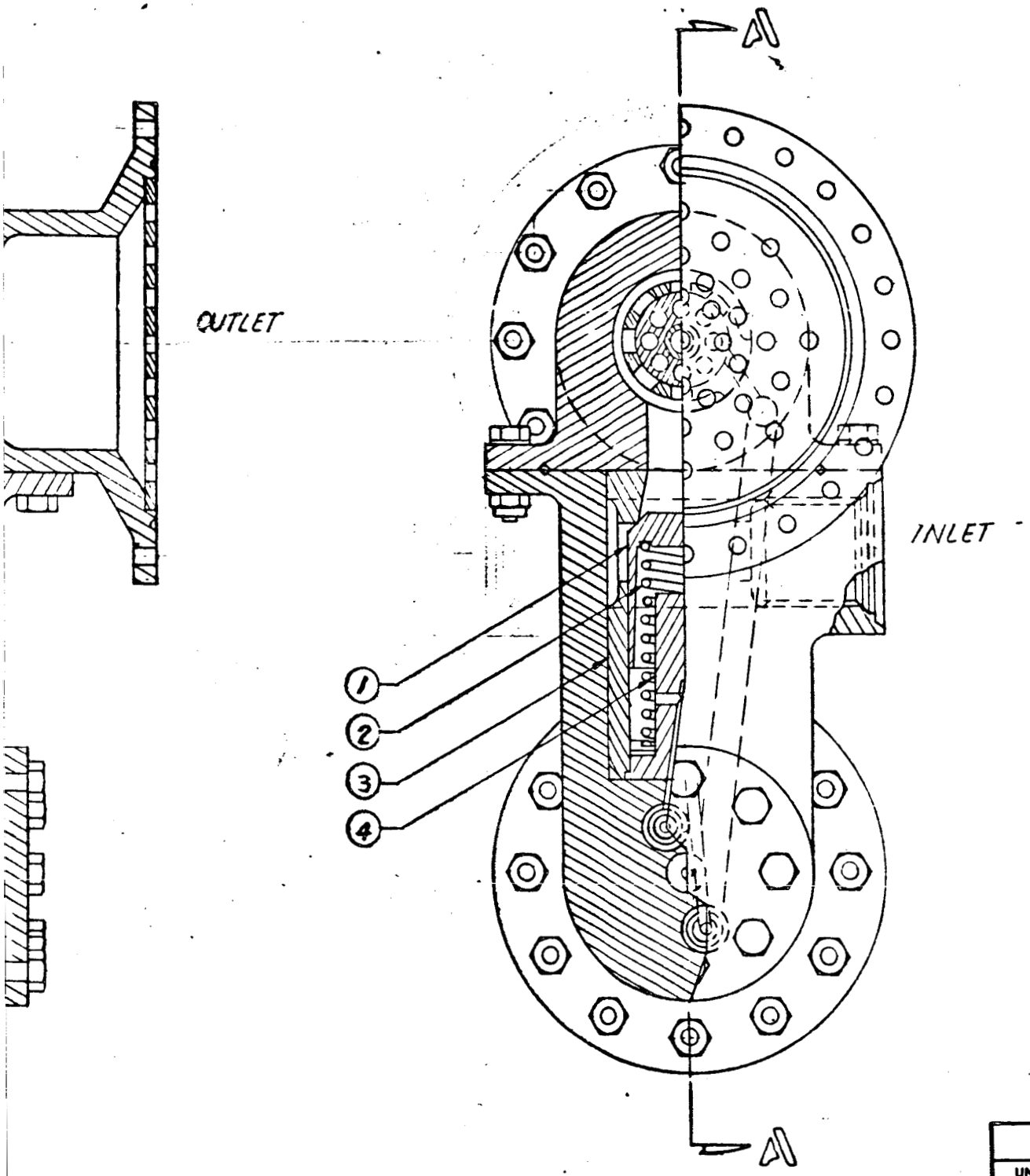

FOR INTERPRETATIO DRAWING SEE 0-7	
UNLESS OTHERWISE S	
DIMENSIONS ARE IN	
TOLERANCES X .XX .XXX ± .1 ± .03 ± .010 ANGULAR PER 0-70902	ALL SU

* CHROME PLATED

NOTE NO.	FIND NO.	OPP DASH NO.	SHN DASH NO.	DESCRIPTION	STOCK SIZE	MATERIAL SPECIFICATION	INITIAL COND OR HT TR KSI	FINAL COND OR HT TR KSI	ZONE
	33			VALVE - "B"		—			
	32			VALVE - "A"		—			
	31			VALVE - SEQUENCE		—			
	30			BODY - SHUTOFF VALVE		AL ALY			
	29			SUPPORT		AL ALY			
	28			SPRING - BIAS		NI-SPAN C			
	27			GUIDE - BIAS SPRING		AL ALY			
	26			BELLOWS - CONTROLLER		CRES			
	25			SPRING - CONTROLLER		NI-SPAN C			
	24			SPRING - SEQUENCE VALVE		NI-SPAN C			
	23			BODY - CONTROLLER		AL ALY			
	22			GUIDE - CONTROLLER		AL ALY			
	21			SEAT - CONTROLLER		CRES			
	20			PLATE - SEQUENCE VALVE		AL ALY			
	19			VALVE - PRIMARY		—			
	18			BEAM - BALANCE		AL ALY			
	17			CAP - CONTROLLER		AL ALY			
	16			POPPET - CONTROLLER		CRES			
	15			PISTON - METERING VALVE		17-4 CRES. *	COND. H900		
	14			CYLINDER - METERING VALVE		AL BRONZE			
	13			SEAT - FLOW LIMITER		CRES			
	12			FLOW LIMITER - ASSY		—			
	11			CAP - ACTUATOR		AL ALY			
	10			SPACER - ACTUATOR		AL ALY			
	9			GUIDE - ACTUATOR		AL ALY			
	8			BODY - ACTUATOR		AL ALY			
	7			BELLOWS - ACTUATOR		CRES			
	6			SPRING - ACTUATOR		NI-SPAN C			
	5			ROD - METERING		AL ALY			
	4			BUMPER - SHUT-OFF VALVE		AL ALY			
	3			CYLINDER - SHUT-OFF VALVE		CRES			
	2			SPRING - SHUT-OFF VALVE		NI-SPAN C			
	1			POPPET - SHUT-OFF VALVE		AL ALY			

LIST OF MATERIALS

FOR PARTS LIST AND USAGE DATA SEE DOCUMENT SAME NUMBER PREFIXED PL

INTERCHANGEABILITY REQD

REPLACEABILITY REQD

BY

MATL

TOOLING

CHECK

STRESS

GR ENGR

DESIGN D.E. Howard

DRAWN

CONTRACT NO.

ASTRONAUTICS APPROVAL

GENERAL DYNAMICS | ASTRONAUTICS
SAN DIEGO, CALIFORNIA

REGULATOR, FLOX-ATLAS

CODE IDENT NO. 05342 | SIZE J | DRAWING NO. DRAWING "D"

SCALE | RELEASED | SHEET

A2632 (3-63) | DISTR CODE

FIGURE 13

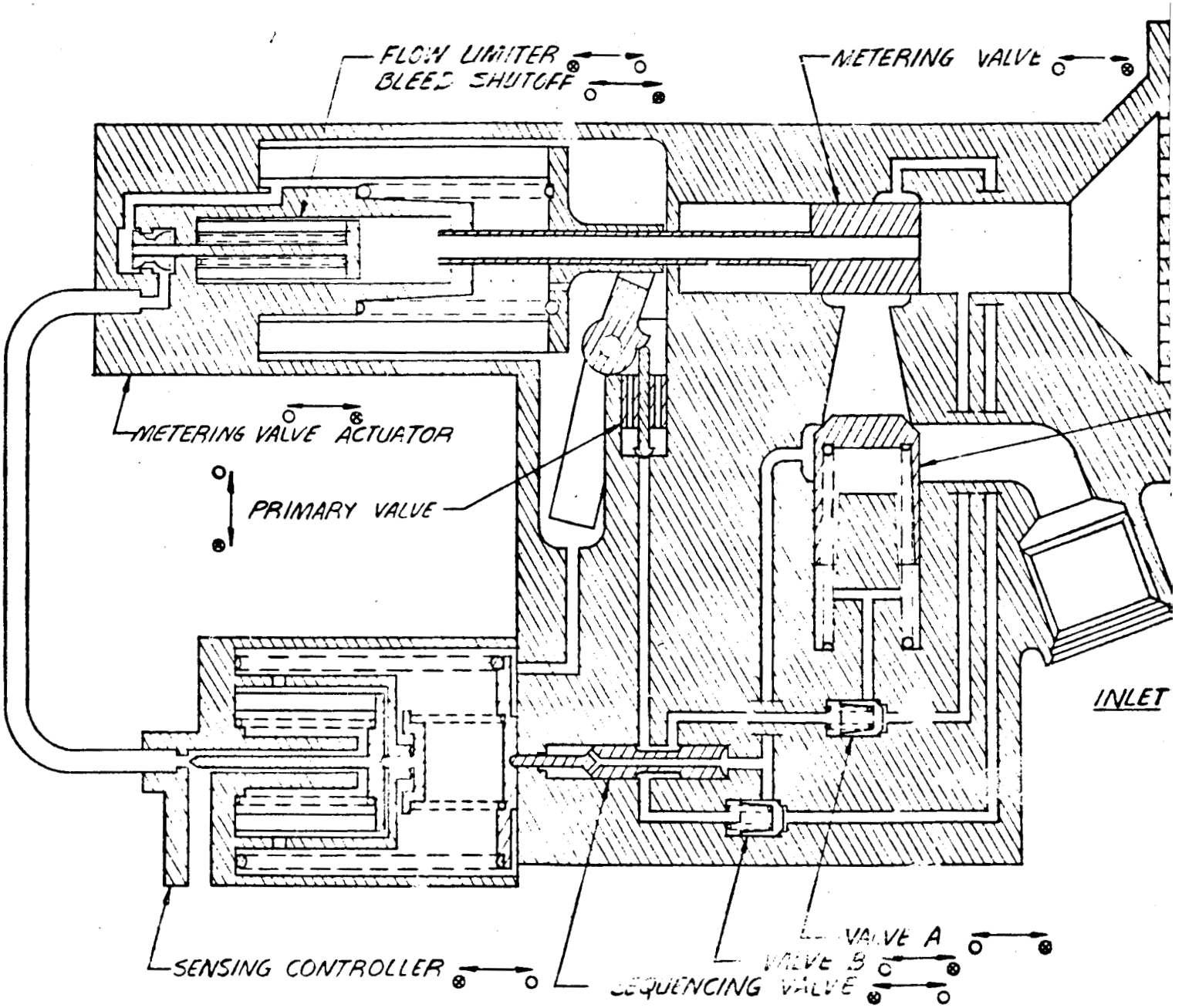
FLOW LIMITER
BLEED SHUTOFF
METERING VALVE
METERING VALVE ACTUATOR
PRIMARY VALVE
INLET
VALVE A
VALVE B
SEQUENCING VALVE
SENSING CONTROLLER

OUTLET

SHUTOFF VALVE

FOR INTERPRETATION OF DRAWING SEE 0-70900	
UNLESS OTHERWISE SPECIFIED	
DIMENSIONS ARE IN INCHES	
TOLERANCES X XX XXX ± .1 ± .03 ± .010 ANGULAR PER 0-70902	ALL MACHINED SURFACES

SEQUENCE	TANK PRESS	INLET PRESS	FLOW LIMITER	PRIMARY VALVE	PRESSURE CONTROLLER	SEQUENCING VALVE A	VALVE B	SHUTOFF VALVE	INTERRUPTER VALVE	BLEED SHUTOFF
STANDBY	6 PSIG	0	O	↕	O	O	↕	↕	↕	↕
REGULATOR LOCKUP	32 PSIG	0	O	↕	↕	O	↕	↕	↕	O
IGNITION -"0" TIME	32 PSIG	30[illegible] PSIG	↕	↕	↕	↕	↕	O	↕	↕	O
LIFTOFF	23.2 PSIG	28[illegible] PSIG	O	O	O	↕	↕	O	↕	O	O
LIFTOFF + 20 SECONDS	23.2 PSIG	20[illegible] PSIG	O	O	O	O	O	O	O	O	O
LIFTOFF + 101 SECONDS	30.7 PSIG	47[illegible] PSIG	O	O	O	O	O	O	O	O	O
FLOW RATE > [illegible]	34.7 PSIG		↕	↕	↕	↕	↕	↕	↕	↕	O

NOTE NO.	FIND NO.	OPP DASH	SHN NO.	DESCRIPTION	STOCK SIZE	MATERIAL SPECIFICATION	INITIAL COND OR HT TR KSI	FINAL	ZONE

LIST OF MATERIALS

FOR PARTS LIST AND USAGE DATA SEE DOCUMENT SAME NUMBER PREFIXED PL

INTERCHANGEABILITY REQD

REPLACEABILITY REQD

BY

MATL

TOOLING

CHECK

STRESS

GR ENGR

DESIGN D.E. Howard

DRAWN

CONTRACT NO.

ASTRONAUTICS APPROVAL

GENERAL DYNAMICS | ASTRONAUTICS
SAN DIEGO, CALIFORNIA

REGULATOR, FLOX-ATLAS

CODE IDENT NO. 05342

SIZE E

DRAWING NO. SCHEMATIC 'D'

SCALE

RELEASED

SHEET

DWG NO. B

REV

SH

DWG NO. A

PACKAGE NO.

DISTR CODE

2 1

Figure 14

III. DESIGN CALCULATIONS:

The following design calculations demonstrate that the selected design concept is practical.

(1) Shutoff valve (Figure 15), valve 'A' (Figure 16) and primary valve (Figure 13):

(a) Maximum diametral clearance area around the shutoff (S/O) valve poppet:

$$A = \frac{\pi}{4}\left(\overline{1.3500}^2 - \overline{1.3460}^2\right) = \boxed{.0085\ in^2}$$

(b) Area behind the S/O valve poppet:

$$A = \frac{\pi}{4}\ \overline{1.3460}^2 = \boxed{1.42\ in^2}$$

(c) Area selected for the S/O valve seat:

$$A = \frac{\pi}{4}\ (1.0)^2 = \boxed{.785\ in^2}$$

(d) Frontal area of the S/O valve poppet exposed to inlet pressure:

$$A = 1.420 - .785 = \boxed{.635\ in^2}$$

(e) Spring force (S/O valve closed):

$$\boxed{F = 10\#}$$

(f) Pressure behind the S/O valve poppet must drop to:

$$1.42\ P + 10 = .635\ (3000)$$

$$\boxed{P = 1330\ PSI}$$

before the S/O valve will open.

(g) Flow across diametral clearance of the S/O valve:

$$w = \frac{.2095\ (.6)\ .0085\ (3015)}{\sqrt{460}} = \boxed{.146\ \#/sec}$$

(See Para. III-8 for description of this equation).

III. DESIGN CALCULATIONS (continued)

(1) (h) Area of valve 'A' seat required:

$$A = \frac{.146\sqrt{460}}{.2095\ (.6)\ 1355} = \boxed{.0183\ in^2}$$

(i) Area selected for valve 'A' seat:

$$A = \frac{\pi}{4}\ \overline{.345}^2 = \boxed{.0935\ in^2}$$

(j) Pressure behind the S/O valve will drop to:

$$P = \frac{.146\ \sqrt{460}}{.2095\ (.6)(.0935)} = \boxed{260\ PSI}$$

when valve 'A' is open.

(k) Maximum diametral clearance area around valve 'A':

$$A = \frac{\pi}{4}\left(\overline{.3755}^2 - \overline{.3733}^2\right) = \boxed{.00129\ in^2}$$

(l) Area behind valve 'A':

$$A = \frac{\pi}{4}\ \overline{.3733}^2 = \boxed{.109\ in^2}$$

(m) Frontal area of valve 'A' exposed to inlet pressure:

$$A = .109 - .0935 = \boxed{.0155\ in^2}$$

(n) Spring force, valve 'A' closed:

$$\boxed{F = .5\#}$$

(o) Pressure behind valve 'A' must drop to:

$$.109\ P + .5 = .0155\ (3000)$$

$$\boxed{P = 422\ PSI}$$

before valve 'A' will open.

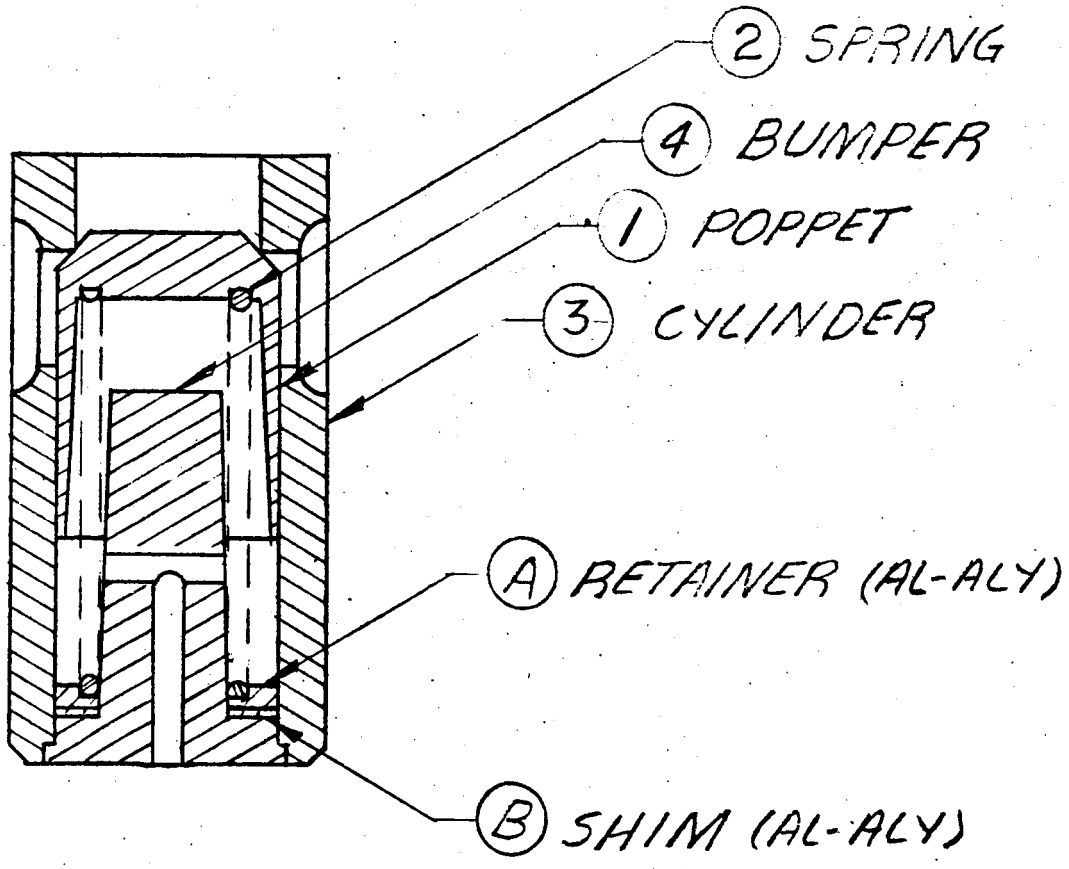

SHUTOFF VALVE

Figure 15

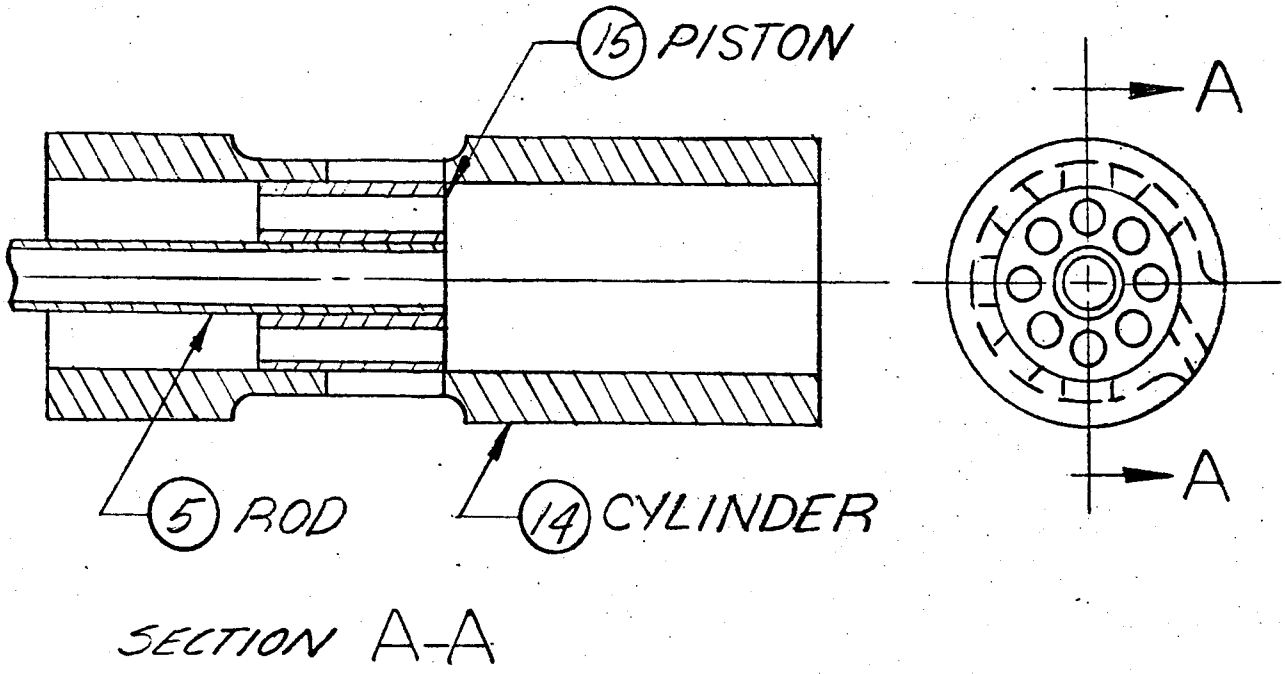

METERING VALVE

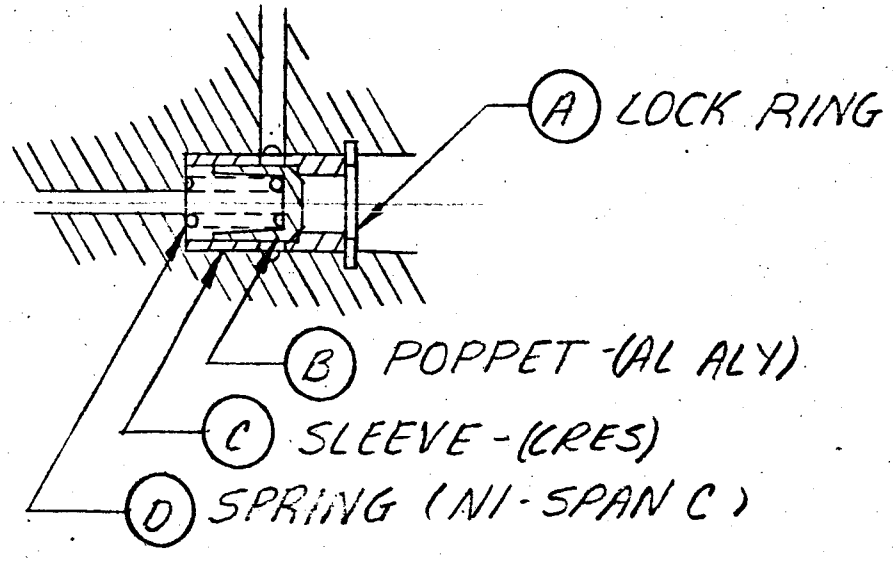

VALVE (TYPICAL) "A" & "B"

Figure 16

III. DESIGN CALCULATIONS (continued)

(1) (p) Flow across diametral clearance of valve 'A':

$$w = \frac{.2095\ (.6)\ \ .00129\ (3015)}{\sqrt{460}} = \boxed{.023\ \#/sec}$$

(q) Area of primary valve seat required:

$$A = \frac{.023\ \sqrt{460}}{.2095\ (.6)\ 437} = \boxed{.009\ in^2}$$

(r) Area selected for the primary valve seat:

$$A = \frac{\pi}{4}\ (.107)^2 = \boxed{.009\ in^2}$$

(s) Force required to hold the primary valve closed:

$$A = .009\ (3000) = \boxed{27\#}$$

(t) Required lift of the primary valve to expose seat area of .009 in^2:

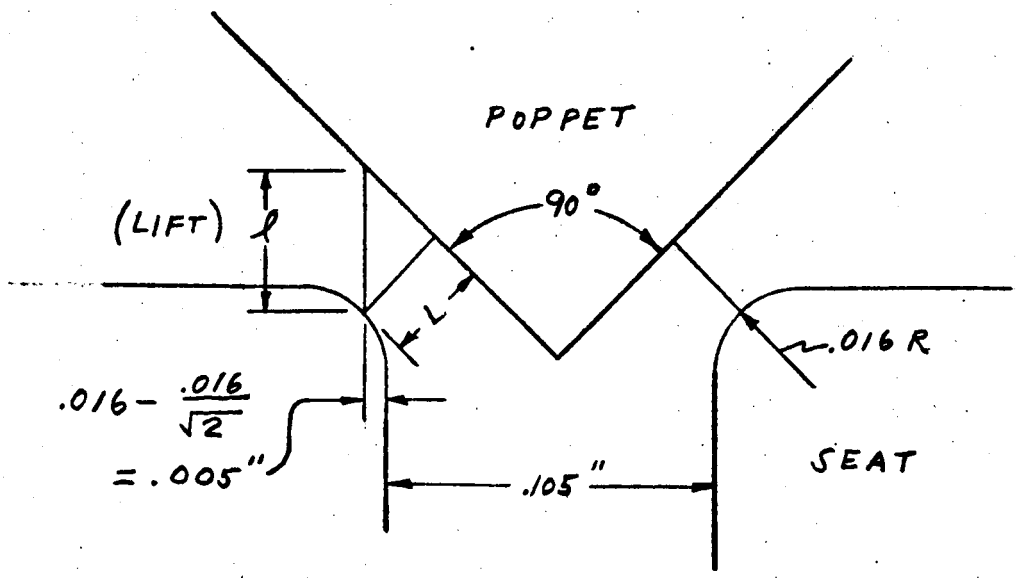

III. DESIGN CALCULATIONS (continued)

(1) (t) (continued)

Flow area is frustrum of cone

$$A = \frac{1}{2} L \ (P_b + P_t)$$

where

A = area in^2

L = slant ht. - In.

P_b = perimeter of base - In.

P_t = perimeter of top - In.

d_b = .105 + .005 + .005 = .115"

$$d_t = .115 - 2 \frac{L}{\sqrt{2}} = .115 - 2 \frac{\ell}{2} = .115 - \ell$$

$$L = \frac{\ell}{\sqrt{2}}$$

$$A = \frac{\pi}{2} \frac{\ell}{\sqrt{2}} (.115 + .115 - \ell) = .009$$

Solving this quadratic for ℓ gives ℓ = **.044"**

(u) Selected pre load of metering valve actuator spring:

F = 10#

(v) Selected lever ratio from metering valve actuator rod to primary valve:

L.R. = 3:1

(w) Required motion of metering valve before primary valve becomes effective:

.044 x 3 = **.132"**

III. DESIGN CALCULATIONS (continued)

(2) Metering Valve (Figure 16)

(a) Maximum required flow area:

$$A = \frac{w\sqrt{T}}{.2095\ CP}$$

where

A =	Flow area at BECO		in^2
w =	Flow rate at BECO	(fig. 3)	#/sec
T =	Temp. at BECO	(fig. 2)	°R
P =	Inlet pressure at BECO	(fig. 2)	PSI
C =	Valve coefficient (assumed to be 0.6)		
.2095 =	Constant for helium for sonic flow		

$$A = \frac{.21\sqrt{910}}{.2095\ (.6)\ 75} = \boxed{.67\ in^2}$$

(b) Selected diameter of metering valve:

dia = $\boxed{1\ in.}$

(c) Selected stroke of metering valve:

Stroke = $\boxed{3/4\ in.}$

(d) Usable stroke of metering valve (ref. III-2-w):

= .750 - .132 = $\boxed{.618\ in.}$

(e) Selected flow area:

A = $\boxed{.925\ in^2}$

(f) Required slot size (6 slots):

$\frac{.925}{6}$ = $\boxed{.618\ in.\ x\ .25\ in.}$

(g) Required flow area before programming (from fig. 4):

A = $\boxed{.04\ in^2}$

III. DESIGN CALCULATIONS (continued)

(2) (h) Selected flow area before programming:

$A = \boxed{.05 \text{ in}^2}$

(i) Required slot size (one slot):

$.05 = \boxed{.618 \text{ in.} \times .081 \text{ in.}}$

(3) Metering valve actuator (Figure 17)

(a) Selected bellows catalog data:

Mfg. - Standard Thompson Cat #3045 CRES

OD = 2.25 in.

ID = 1.475 in.

Max. Pressure = 98 PSI

Rate = 211 #/in. per convolution

Area = 2.67 in^2

Free length per convolution = .190 in.

Max. travel per convolution = .084 in.

Max. number of convolutions = 17

Wall thickness = .0065 in.

(b) Bellows free length:

$17 \quad (.190) = \boxed{3.23 \text{ in.}}$

(c) Bellows Rate:

$\frac{211}{17} = \boxed{12.4 \text{ \#/in.}}$

(d) Max. stroke:

$17 \ (.184) = \boxed{1.43 \text{ in.}}$

(e) Part of max. stroke used:

$\frac{.75}{1.43} = \boxed{52.5\%}$

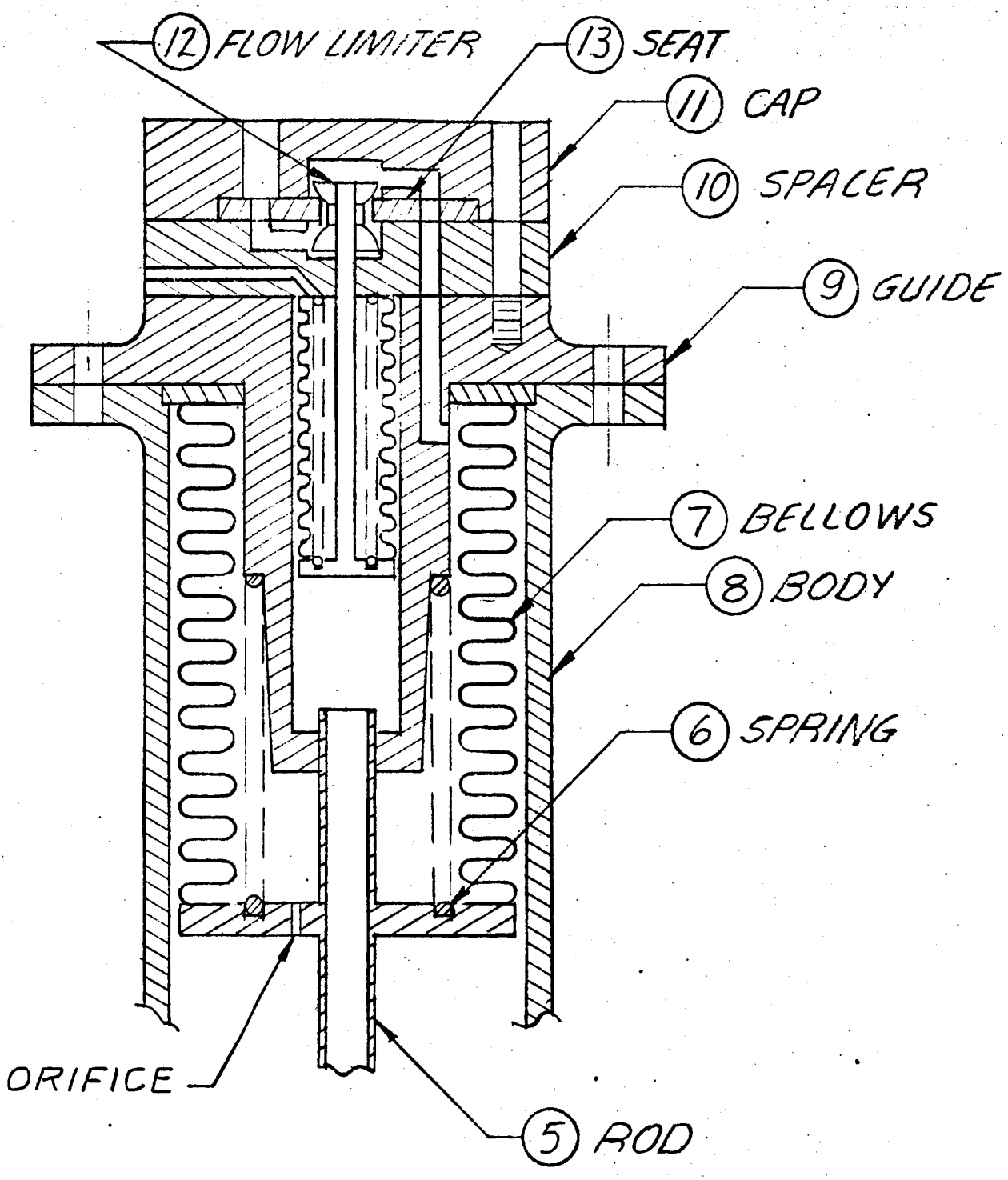

ACTUATOR - METERING VALVE

Figure 17

III. DESIGN CALCULATIONS (continued)

(3) (f) Selected max. pressure differential:

$\Delta P = \boxed{15.0 \text{ PSI}}$

(g) Part of max. pressure used:

$\frac{15}{98} = \boxed{15.3\%}$

(h) Bellows life:

From Convair Design Manual Section V Fig. 5-5 for conditions established by (e) and (g) above,

$\boxed{\text{Life} = 200{,}000 \text{ cycles}}$

(i) Selected spring preload:

$F = \boxed{10\#}$

(j) Selected bellows preload:

$F = \boxed{0\#}$

(k) Required maximum spring and bellows load:

$F = 15\ (2.67) = \boxed{40\#}$

(l) Required maximum spring load:

$F = 40 - .75\ (12.4) = \boxed{30.7\#}$

(m) Rate of spring:

$R = \frac{30.7 - 10.0}{.75} = \boxed{27.6\ \#/\text{in.}}$

(n) Combined rate:

$R = 27.6 + 12.4 = \boxed{40\ \#/\text{in.}}$

(o) Spring design data:

Load @ 60,000 PSI stress = 30.7#

Load @ 90,000 PSI stress = 46.0# (solid height)

Max. OD = 1-3/8 in. (to fit inside bellows)

Rate = 27.6 #/in.

III. DESIGN CALCULATIONS (continued)

(3) (o) (continued)

Mean dia. = 1.25 in. approx.

Wire dia. = .117 in.

Active coils = 5

Total coils = 7

Free length = 7 (.117) + $\frac{46}{27.6}$ = **2.49 in.**

Working lengths:

Metering valve closed = 2.49 - $\frac{10}{27.6}$ = **2.13 in.**

Metering valve open = 2.49 - $\frac{30.7}{27.6}$ = **1.38 in.**

(4) Actuator Orifice and Sensing Controller (Figure 18)

(a) Design accuracy -- **1.0 PSI max.**

(b) Design Response rate:

Metering valve to move from full closed to full open in 1.0 second with a step change of 1.0 PSI.

(c) Required gas volume to be removed internally from actuator bellows to move metering valve from full closed to full open:

(1) Bellows volume = 2.67 x 3.23 = 8.6 in^3

(2) Subtraction volumes:

a. 1-1/8 in. dia. x 1-5/16 in. long = 1.3 in^3

b. 1-3/8 in. dia. x 1-1/8 in. long = 1.7 in^3

c. 3/8 in. dia. x 7/8 in. long = .1 in^3

d. .117 in. dia. x 7 (π) 1.25 long = .3 in^3

3.4 in^3

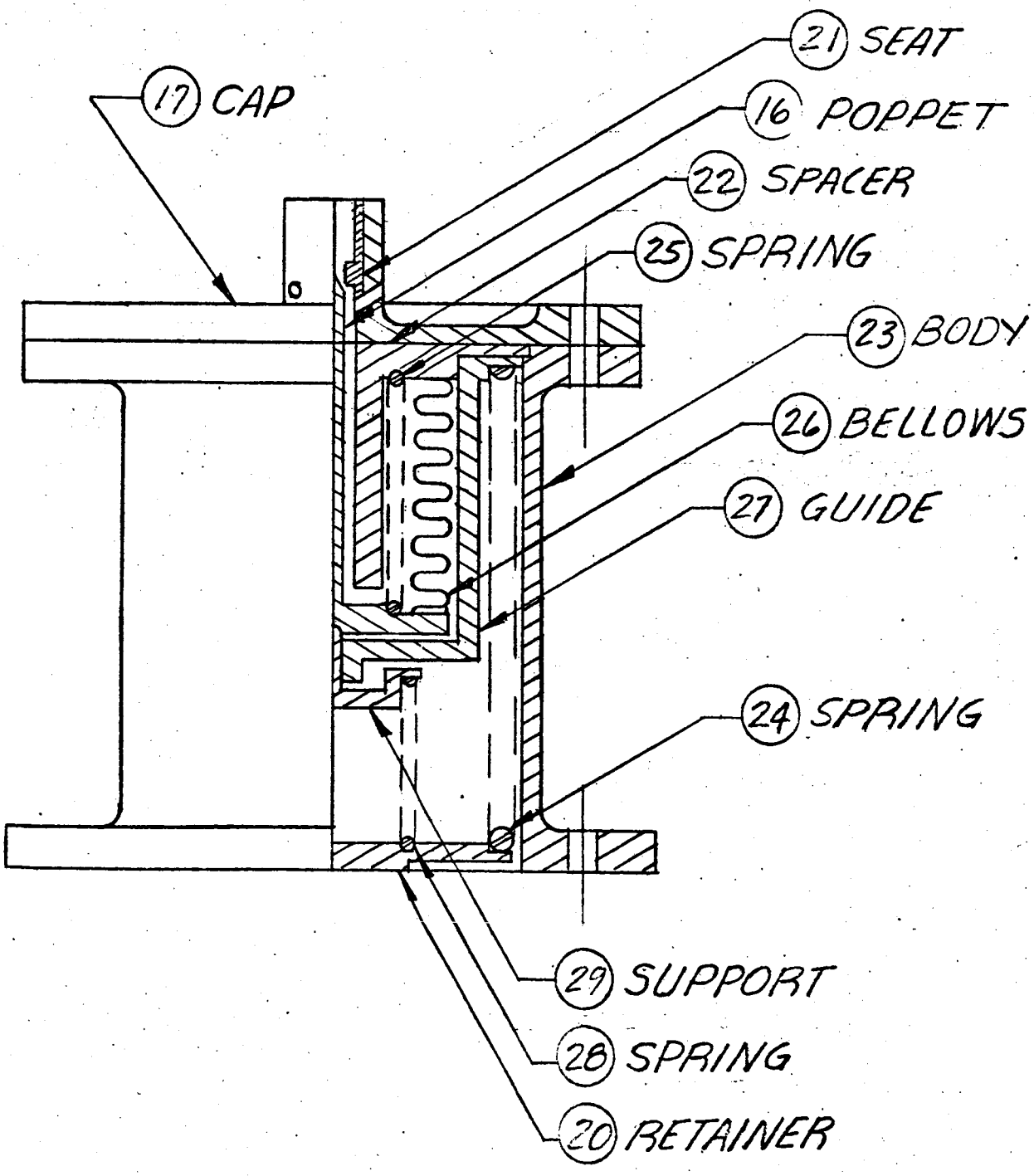

SENSING CONTROLLER

Figure 18

III. DESIGN CALCULATIONS (continued)

(4) (c) (3) Initial internal volume = 8.6 - 3.4 = 5.2 in^3

(4) Stroke volume = 2.67 (.75) = $\underline{2.0\ in^3}$ (a)

(5) Final internal volume = 3.2 in^3 (b)

(6) Initial pressure = 30.7 PSI (a)

(7) Final pressure = 30.7 - 15.0 = 15.7 PSI (b)

(Ref. III - 3 - (f)

(8) Volume to be removed in one second:

a.	2.0 in^3 @ 30.7 PSI
b.	3.2 in^3 @ 15.0 PSI

(d) Selected actuator orifice area:

$$A = \frac{\pi}{4} \frac{}{.047}^2 = \boxed{.00174\ in^2}$$

(e) Required flow rate to atmosphere through the sensing section:

(1) Due to removal of gas from actuator bellows to meet design response

$$w_a = \frac{PV}{RT} = \frac{144\ (30.7)\ 2}{386\ (910)\ 1728} = .000015\ \#/sec$$

$$w_b = \frac{PV}{RT} = \frac{144\ (15)\ 3.2}{386\ (910)\ 1728} = .000011\ \#/sec$$

$$W_a + W_b = .000026\ \#/sec$$

(2) Due to flow entering through the actuator orifice:

$$w = \frac{.2095\ (.6)(.00174)\ 30.7}{\sqrt{910}} = .000222\ \#/sec$$

Total $\boxed{= .000248\ \#/sec}$

III. DESIGN CALCULATIONS (continued)

(4) (f) Required area of sensing valve:

$$A = \frac{.000248 \sqrt{910}}{0.2095\ (.6)\ 15.7} = \boxed{.0038\ in^2}$$

(g) Selected sensing valve configuration:

Seat dia. = $\boxed{.250\ in.}$

Poppet angle = $\boxed{45°}$

(h) Required lift of sensing poppet to expose area of .0038 in^2:

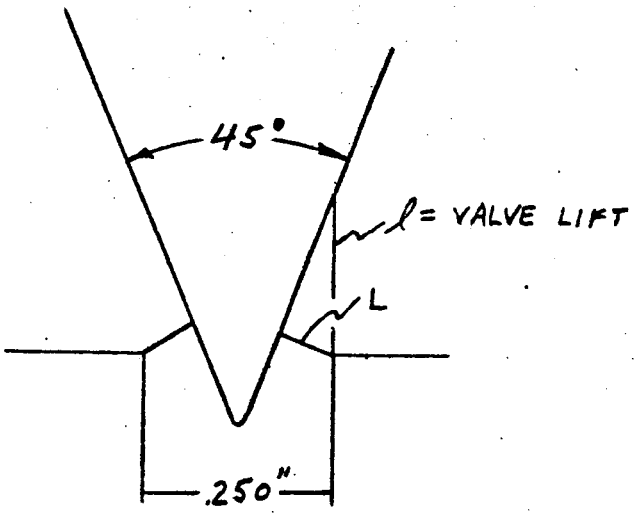

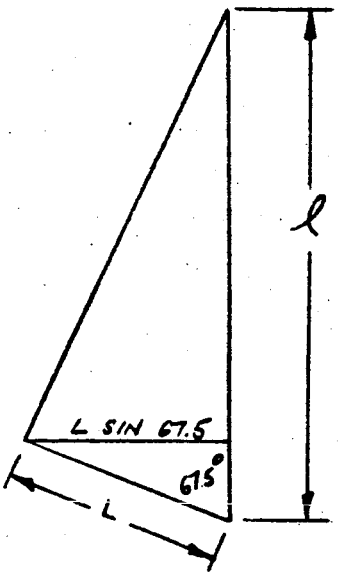

Flow area is frustrum of cone

$$A = \frac{1}{2} L (P_b + P_t)$$

$$P_b = \pi (.250)$$

$$P_t = \pi (.250 - 2L \sin 67.5) = \pi [.250 - 2\ (.383\ell)\ .925]$$

$$A = \frac{1}{2} (.383\ell)\ \pi [.250 - 2(.383\ell)\ \ .925] = .0038$$

$$L = \cos 67.5 = .383$$

Solving this quadratic for ℓ gives $\boxed{\ell = .013\ in.}$

III. DESIGN CALCULATIONS (continued)

(4) (i) Selected sensing bellows catalog data:

Mfg - Standard Thompson Cat #3036 CRES

OD = 1.563 in.

ID = 1.0 in.

Max. Pressure = 70 PSI

Rate = 275 #/in. per convolution

Area = 1.264-IN^2

Free length per convolution = .138 in.

Max. travel per convolution = .046 in.

Max. number of convolutions = 16 (use 12)

Wall thickness = .0055 in.

(j) Bellows free length:

12 (.138) = **1.65 in.**

(k) Bellows rate:

$\frac{275}{12}$ = **23.0 #/in.**

(l) Selected force of program spring at 30.7 PSI:

F = **1.0#**

(m) Required [redacted] force @ 23.2 PSI:

F = 1.0 + (30.7 - 23.2) 1.264 = **10.5#**

(n) Selected stroke of program spring

S = **.5 in.**

(o) Rate of program spring:

$\frac{10.5 - 1.0}{.50}$ = **19 #/in.**

III. DESIGN CALCULATIONS (continued)

(4) (p) Program spring design data:

Load @ 60,000 PSI stress = 10.5#

Load @ 90,000 PSI stress = 15.5# (solid height)

Rate = 19 #/in.

Mean dia. = 1.0 in.

Wire dia. = .076-IN.

Active coils = 2.5

Total coils = 4.5

Free length = 4.5 (.076) + $\frac{15.5}{19}$ = $\boxed{1.16 \text{ in.}}$

Working lengths:

@ 23.2 PSI; W.L. = 1.16 - $\frac{10.5}{19}$ = $\boxed{.61 \text{ in.}}$

@ 30.7 PSI; W.L. = .61 + .50 = $\boxed{1.11 \text{ in.}}$

(q) Required force of sensing spring:

F = 23.2 (1.264) + 10.5 = $\boxed{39.8\#}$

(r) Sensing spring design data:

Load @ 60,000 PSI stress = 39.8#

Load @ 74,000 PSI stress = 49.0# (solid height)

OD = .875 max (to fit inside bellows)

Mean dia. = .77 in. approx.

Wire dia. = .108 in.

Rate = 39.0#/in.

Active coils = 11

Total coils = 13

Free length = 13 (.108) + $\frac{49}{39}$ = $\boxed{2.67 \text{ in.}}$

III. DESIGN CALCULATIONS (continued)

(4) (r) continued

Working length $= 2.67 - \frac{39.8}{39} = \boxed{1.65 \text{ in}}$

(s) Total rate of sensing controller:

Sensing bellows	23.0
Program spring	19.0
Sensing spring	39.0
	$\boxed{81.0 \text{ \#/in.}}$

(t) Accuracy:

$$\frac{\text{Rate of sensing controller X sensing poppet stroke for full regulator flow}}{\text{Sensing Bellows Area}}$$

$$= \frac{81 \times .013}{1.264} = \boxed{.83 \text{ PSI}}$$

Note: Regulator stability and accuracy are directly related. Some development testing may be required to arrive at the best compromise.

(5) Sequencing Valve and Spring

The sequencing valve actuates because of a differential area between the guide and seat in accordance with the following relations:

(1) $3000\ A_g = F_1 + F_2$

(2) $2000\ A_s = F_1 + F_2$

where

A_g = area of guide in^2

A_s = area of seat in^2

F_1 = sequencing spring force #

F_2 = Program spring force = 10.5#

III. DESIGN CALCULATIONS (continued)

(5) (a) Selected guide area:

$$A_g = \frac{\pi}{4} \overline{.125}^2 = \boxed{.0123 \text{ in}^2}$$

(b) Required seat area:

$$A_s = \frac{3000}{2000} A_g = \boxed{.01845 \text{ in}^2}$$

(d = .153 in.)

(c) Required force of sequencing spring:

From (1) $F_1 = 3000\ (.0123) - 10.5 = \boxed{26.4\#}$

(d) Required rate of sequencing spring:

$$2000\ A_g = F_1 + F_2 - (R_1 + R_2)\ S$$

where

R_1 = rate of sequencing spring #/in.

R_2 = rate of program spring = 19 #/in.

S = Stroke of sequencing valve = .50 in. (Ref. III - 4 - m)

$$2000\ (.0123) = 26.4 + 10.5 - (R_1 + 19)\ .50$$

$$R_1 = \boxed{5.6\ \#/\text{in.}}$$

(e) Sequencing spring design data:

Load @ 60,000 PSI stress = 26.4 #

Load @ 80,000 PSI stress = 34 # (solid height)

Mean dia. = 2.16 in.

Wire dia. = .134 in.

Rate = 5.6 #/in.

Active coils = 8

Total coils = 10

Free length $= 10\ (.134) + \frac{34}{5.6} = \boxed{7.42 \text{ in.}}$

III. DESIGN CALCULATIONS (continued)

(5) (e) continued
Working lengths:

@ 3000 PSI inlet $7.42 - \frac{26.4}{5.6} = \boxed{2.72 \text{ in.}}$

@ 2000 PSI inlet $2.72 + .50 = \boxed{3.22 \text{ in.}}$

(6) Flow Limiter: (Figure 19)

(a) Selected flow limit:

$\boxed{.46 \text{ \#/sec}}$ (D-E Fig 3)

(b) Selected pressure drop across restrictor plate:

$\Delta P = \boxed{20 \text{ PSI}}$

(c) Selected stroke of flow limiting valve:

$\boxed{1/8''}$

(d) Selected pressure range for full stroke:

15 to 50.7 PSIG

(e) Selected flow-limiting bellows catalog data:

Mfg - Standard Thompson Catalog #3017

OD = .710"

ID = .50"

Maximum Pressure = 300 PSI

Rate = 875 #/in per convolution

Area = .282 in^2

Free length per convolution = .058"

Maximum travel per convolution = .011"

Maximum number of convolutions = 30

Wall thickness = .0045"

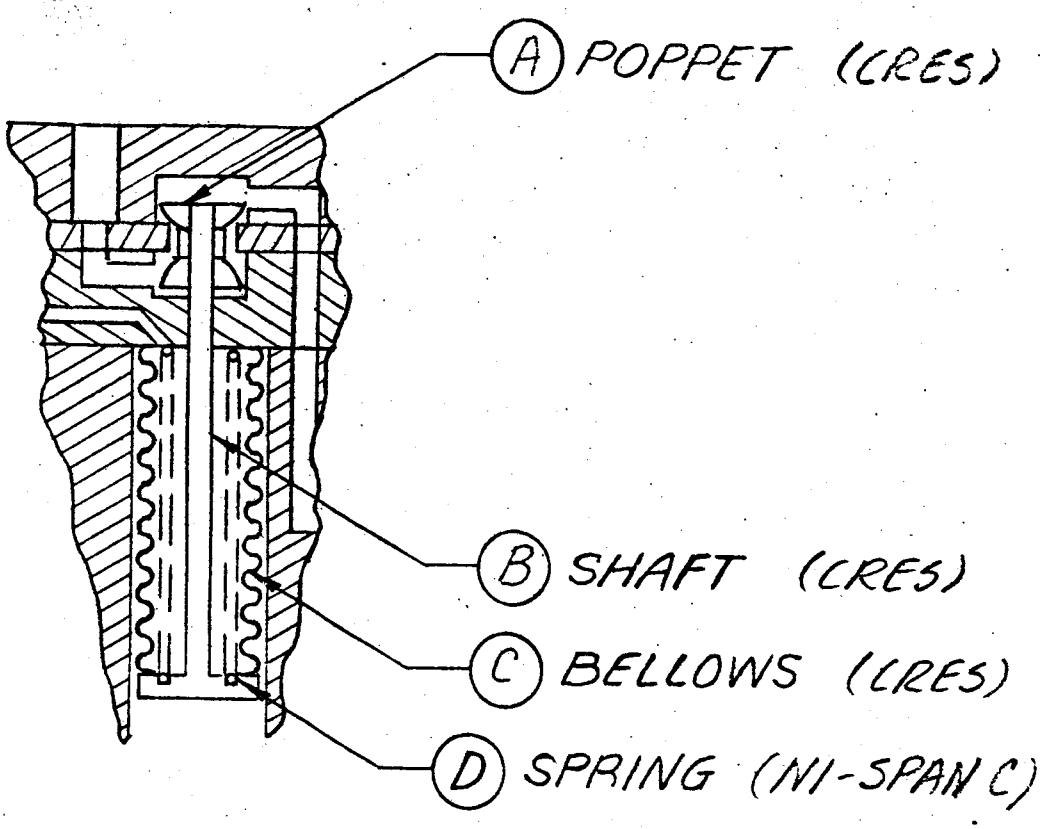

(12) FLOW LIMITER

Figure 19

III. DESIGN CALCULATIONS (continued)

(6) (f) Bellows free length:

30 (.058) = $\boxed{1.74''}$

(g) Bellows rate:

$\frac{875}{30}$ = $\boxed{29.2\ \#/in}$

(h) Maximum stroke:

30 (.011) = $\boxed{.33''}$

(i) Part of maximum stroke used:

$\frac{.125}{.33}$ = $\boxed{38\%}$

(j) Selected maximum pressure differential:

ΔP = $\boxed{50.7\ PSIG}$

(k) Part of maximum pressure used:

$\frac{50.7}{300}$ = $\boxed{17\%}$

(l) Bellows life:

From Convair Design Manual:
Section V Fig 5-5 for conditions established by (i) and (k) above.

life = $\boxed{\text{in excess of 1,000,000 cycles}}$

(m) Selected bellows preload:

F = $\boxed{0\#}$

(n) Required spring preload:

15 (.282) = $\boxed{4.20\#}$

(o) Required maximum spring & bellows load:

50.7 (.282) = $\boxed{14.3\#}$

(p) Maximum bellows load:

29.2 (.125) = $\boxed{3.65\#}$

III. DESIGN CALCULATIONS (continued)

(6) (q) Required maximum spring load:

$14.3 - 3.6 = \boxed{10.7\#}$

(r) Rate of spring:

$$\frac{10.7 - 4.2}{.125} = \boxed{52\ \#/in}$$

(s) Spring design data:

Load @ 60,000 psi stress = 10.7#

Load @ 90,000 psi stress = 16.0# (solid height)

Max OD = .42" (to fit inside bellows)

Rate = 52 #/in

Mean dia = .35" approx.

Wire dia = .054"

Active coils = 5.5

Total coils = 7.5

$$\text{Free length} = 7.5\ (.054) + \frac{16}{52} = \boxed{.72"}$$

Working lengths:

$$\text{Standby pressure} \quad .72 - \frac{4.2}{52} = \boxed{.64"}$$

$$\text{Flow limiting} \quad .64 - .12 = \boxed{.52"}$$

(t) Required flow area of restrictor plate:

$$A = \frac{w}{.67\ CY\sqrt{\rho \Delta P}}$$

where:

A = area - in^2

w = flow - #/sec

ρ = density - $\#/ft^3$ (at upstream condition)

III. DESIGN CALCULATIONS (continued)

(6) (t) (continued)

ΔP = Pressure drop - #/in^2

Y = Expansion factor = .92

C = Orifice coefficient = .68

.67 = Units conversion = $\sqrt{\frac{2g}{144}}$

Pressure ratio for determination of C:

Ambient pressure at 20 sec = 13 PSIA

Ambient pressure at 47 sec = 9 PSIA

Average ambient pressure during pressure recovery from 23.2 to 30.7 = 11 PSIA

$$\frac{P\ (\text{downstream})}{P\ (\text{upstream})} = \frac{30.7 + 11}{50.7 + 11} = .67$$

Upstream density:

$$\rho = \frac{P}{RT} = \frac{144\ (30.7 + 20 + 11)}{386\ (910)} = .0253\ \#/ft^3$$

$$A = \frac{.46}{(.67)(.68)(.92)\ \sqrt{.0253(20)}} = \boxed{1.54\ in^2}$$

Number of 1/4" dia holes required in restrictor plate:

$$\frac{1.54}{\frac{\pi}{4}(.25)^2} = \boxed{31}$$

(u) Required stroke for non-interference with sensing valve:

Maximum sensing valve area = .0038 in^2 (ref. Para. III,4.f)

Diameter of flow-limiting valve = .375"

III. DESIGN CALCULATIONS (continued)

(6) (u) (continued)

Assume (1) Flow is thru a cylindrical section of .375" dia.

(2) Area will not interfere if it is double that of sensing valve.

$\pi d l = A$

$$l = \frac{2\ (.0038)}{\pi\ .375} = \boxed{.0065"}$$

(v) Interference zone pressure range:

$$(50.7 - 15)\ \frac{.0065}{.125} = \boxed{1.85\ \text{PSI}}$$

(w) Maximum flow limit:

Maximum flow limit occurs at start because of lower temperature and higher ambient pressure.

$$W_1 = W_2 \sqrt{\frac{P_2}{P_1}\ \frac{T_2}{T_1}}$$

where subscript 1 refers to initial conditions and subscript 2 refers to average pressure recovery conditions.

$$W_1 = .46 \sqrt{\frac{15}{11}\ \frac{910}{460}} = \boxed{.75\ \#/\text{sec}}$$

(x) Flow limit under specification conditions:

Condition: .75 #/sec maximum @ 150°F

$$W = .75 \sqrt{\frac{460}{460 + 150}} = \boxed{.65\ \#/\text{sec}}$$

III. DESIGN CALCULATIONS (continued)

(7) Reference Pressure Calculations:

Figure 9 of Ref. 6, displays pressure coefficient data as follows:

$$\Delta C_P = \frac{P_C - P_B}{q_\infty}$$

and

$$C_{P_B} = \frac{P_B - P_\infty}{q_\infty}$$

where

ΔC_P = Heat shield diff pressure coeff (dimensionless)

C_{P_B} = Base pressure coeff (dimensionless)

P_C = Atlas engine compartment pressure (PSI)

P_B = Base pressure (downstream of heat shield) (PSI)

P_∞ = Free stream static pressure (PSI)

q_∞ = Free stream dynamic pressure (PSI)

An algebraic addition of these two coefficients yields the engine compartment coefficient:

$$C_{P_C} = \frac{P_C - P_\infty}{q_\infty}$$

From Ref. 8, the interstage adaptor pressure coefficient is obtained:

$$C_{P_I} = \frac{P_I - P_\infty}{q_\infty}$$

P_I = Interstage adapter compartment pressure (PSI)

C_{P_I} = Pressure coefficient, interstage adapter (dimensionless)

C_{P_C} = Pressure coefficient, engine compartment (dimensionless)

III. DESIGN CALCULATIONS (continued)

(7) continued

Subtracting these two and multiplying by q_∞ (Ref. 7) gives the difference in reference pressures as follows:

$$q_\infty (C_{P_C} - C_{P_I}) = \left[\frac{P_C - P_\infty}{q_\infty} - \frac{P_I - P_\infty}{q_\infty} \right] q_\infty$$

$$= P_C - P_I$$

$$\text{or} \quad = -(P_I - P_C)$$

This data is displayed in Fig. 5 and 6.

Also, multiplying C_{P_C} and C_{P_I} by q_∞ gives the value of the reference pressure with respect to the free stream static pressure P_∞:

$$q_\infty C_{P_C} = P_C - P_\infty$$

$$q_\infty C_{P_I} = P_I - P_\infty$$

This data is displayed in figure 7 and 8.

(8) Fixed Orifice Calculations (Figure 9):

The flow for orifice areas of .020 in^2 and .035 in^2 was calculated using the sonic flow formula for helium as follows:

$$w = \frac{.2095\ C\ A\ P}{\sqrt{T}}$$

where

A = flow area (orifice area) in^2

w = flow rate - #/sec

T = Inlet temp. of helium - °R

P = Inlet pressure of helium - PSIA

III. DESIGN CALCULATIONS (continued)

(8) continued

C = flow coefficient (assumed to be 0.6)

.2095 = Constant for helium for sonic flow.

The inlet temperature (T) and pressure (P) were taken from Figure 2.

The helium flow rate to the tank from this calculation is compared with the flow rate for missile 55D flight (Ref. 4).

The difference is used to establish tank pressure:

$$\Delta P = \frac{\Delta w \ RT}{144 \ V}$$

where

ΔP = pressure difference at time t (orifice vs. missile 55D)PSI

Δw = weight difference at time t (orifice vs. missile 55D)#/sec

R = gas constant for helium = 386 BTU/#/°R

T = temperature of ullage volume (from 55D data, Ref.4, Fig. 4) = 430°R constant

V = ullage volume = 43 ft^3 + 15 ft^3/sec x t

(43 ft^3 = initial ullage volume)

This pressure difference is applied to missile 55D data to obtain tank pressure history for a fixed orifice supply.

DESIGN CALCULATIONS (continued)

(9) Analysis of a Direct Acting Regulator: The following analysis was accomplished to determine the feasibility of the design concept of designs #A and #B.

A direct acting regulator uses the output error signal to power the pressure control valve without amplifying the error signal. Tank pressure works against a reference spring to open or close the metering valve piston to provide the required flow.

Required stroke of metering valve = 3/4 in.

Required regulation accuracy = 1.0 psi
(Max. error signal)

Available Force = allowable pressure change (1.0 PSI) times the area over which it acts (A)

$$\text{Spring Rate} = \frac{\text{Force}}{\text{Stroke}} = \frac{(1)\ (A)}{3/4} = \frac{4}{3}\ A$$

Initial deflection required (for a pressure of 30 PSI)

$$= \frac{\text{Force}}{\text{Rate}} = \frac{30A}{4/3\ A} = 22.5 \text{ in}$$

This is not a practical design because the initial deflection is independent of the area. Increasing spring rate to reduce initial deflection to a practical limit of 1 in., would require a lever ratio of 22.5 to 1 for a 3/4 in. stroke of the metering valve. A large bellows with an effective area for example of 112.5 in^2 (O.D. greater than 1 foot) would provide a marginal operating force of

$$F = \frac{(1)\ 112.5}{22.5} = 5\# \text{ at beginning of stroke}$$

The above analysis demonstrates that a direct acting metering piston type regulator is impractical.

REFERENCES

1. Report No. AFBMD-TR-60-74, Design, Development, and Testing of Advanced Helium Pressure Regulator Part No. 551302. Contract AF04(647)-160. Prepared by Rocketdyne - July 1960.

2. Report No. AFBMD-TR-60-72, Analysis, Design, and Development of High Flow Helium Pressure Regulator. Contract AF04(647)-161. Prepared by Robertshaw Fulton Controls Co. - July 1960.

3. Report No. RPL-TDR-64-68, Rocket Engine Valve Poppet and Seat Design. Prepared by Rocketdyne - May 1964.

4. Report No. AE61-0596, Thermal Analysis of Missile 55D Ullage. Contract No. AF04(647)-507. Prepared by GD/C - June 1961.

5. Control Dynamics Memo, Pneumatic Control System for FLOX Vehicles. CD-65-157-SLV, dated 30 August 1965.

6. GD/A 63-1142, Effectiveness of Nitrogen Gas Purge in Reducing Atlas SLV-3 Engine Compartment Fire Hazard. 11 November 1963.

7. Vehicle Design Trajectory Data Atlas/Centaur/Surveyor, GD/A 63-1096A, 15 April 1964.

8. AC-6 and On Interstage Adaptor Venting Requirements CTM 184, 12 June 1964

GENERAL DYNAMICS
Convair Division

Attachment #1

DESIGN REVIEW REPORT

DESIGN REVIEW REPORT NO. 696-2-3245-101 | Page 1 of 5

TITLE: FLOX Regulator | DATE OF REVIEW: 31 August 65

RESPONSIBLE GROUP: Pneumatics | REF. DOCUMENTS/DRAWINGS Report GD/C-BJB65-008

SYSTEM: FLOX Pneumatics | ECP 8401

Conclusion:

With the incorporation of the Action Item and Direction identified by this Review, the preliminary design of the FLOX regulator satisfactorily meets the ground rules and requirements of Sales Order (S.O.) 458-1-18 (Task Order #4 to the -3245 Contract). The preliminary design presented is documented by Convair Report GD/C-BJB65-008 of which this report is a part.

Design Review Chairman D R Thomas (2.0) Date 14 SEPT '65

Responsible Group [illegible] Date 15 SEPT. '65

Design Review Group [illegible] J. W. Standley Date 15 Sept 65

NO.	ACTION ITEM	ACTION BY	SCHEDULE
1.	Include an operational matrix to demonstrate the separate functionings of the regulator as it fullfilled its mission of regulating FLOX tank pressure.	Hobart/ Howard 664-0	
	Resolution: Incorporated in Final Report.		CLOSED
1.	Direction: The regulator concept is approved, and the requirement for venting will be reserved for future resolution.		

DESIGN REVIEW REPORT

PURPOSE:

In compliance with the S.O. and Division Policy, this Design Review was held. The objective of the Review was to evaluate the technical adequacy and accuracy of the preliminary design. The further objective was to demonstrate to the Customer this technical adequacy as well as Convair's compliance to the technical requirements of the contract.

PRESENTATION:

Messrs. Gray and Howard of Pneumatics Design gave the main presentation. The presentation summarized the material found in the presentation handout which is a significant portion of the Final Report (GD/C-BJB65-008) (A copy of this handout is on file with the master of this Design Review Report). Flip charts illustrating pressure requirements, design parameters, and flow rate vs. time were used. These are Figure 1, 2 & 3 of GD/C-BJB65-008 respectively.

Four regulator concepts were described, of which "Design D" was preferred. Figure 1 is the Flip Chart used to illustrate this concept.

DISCUSSION HIGHLIGHTS:

1. Because of the requirement to avoid threaded parts, the fine adjustment and calibration of springs and bellows will be accomplished with shims. Each of the major portions of the regulator (shut off section, controller section, metering section) can also be set separately before assembly and final setting.

   Regulators are currently replaced as complete units and it is so recommended for this proposal.

   No particular trouble is expected in the adjustment and calibration of the unit.

2. The controller section of the regulator vents to atmosphere. The vent was to dump into the boil off valve (BOV) exhaust line. With the decision to seal off this line at lift off with the airborne half of the BOV umbilical disconnect (See Design Review Report 696-2-3245-98), another bleed off concept must be arranged. The same problem is faced by the FLOX Relief Valve (See Design Review Report 696-2-3245-97) and, as with the Relief valve, the problem will be held open for future resolution since it does not affect the Design program for the regulator (Direction #1).

DISCUSSION HIGHLIGHTS: (Continued)

3. Mr. Howard described the regulators function in two ways. First, he described the separate portions of the regulator and what they did. He then described how the regulator functions in the performing its regulation task.

   To enhance further understanding Convair will include in the Final Report an operational matrix that will demonstrate the separate functionings of the regulator as it fullfills its mission of regulating FLOX tank pressure.

4. In addition to the above, Convair pointed out that the following considerations have been incorporated into the design concept.

   1. The materials selected for the regulator are compatible with a fluid medium of liquid oxygen and fluorine combined in any mixture ratio.

   2. Only metallic seals, gaskets and "O" rings are employed for separable closures exposed to FLOX.

   3. Carbon and rubber materials are not used in the design.

   4. The design minimizes external and internal leakage.

   5. Ease of cleaning, purging, inspection and contamination control is a prime consideration in this design.

   6. The design is in conformance with the Atlas/Centaur system and Atlas/Centaur environmental specifications (GD/C Report No. 69-00202, Amendment B, dated January 21, 1964).

   7. No lubricants are used.

   8. No cadmium plating is used in the design of any part of the regulator.

   9. Regulator design is considered to be as simple as possible, and still perform the necessary functions. Threaded parts are held to a minimum.

   10. Low weight was a guide line.

GENERAL DYNAMICS
Convair Division

DESIGN REVIEW REPORT

DISCUSSION HIGHLIGHTS: (Continued)

11. The regulator is designed to step program the regulated pressure band from one pressure level to a predetermined higher pressure level. Remote control of this action was considered, but was shelved in favor of a simpler, more reliable, condept. This concept utilizes the repeatable decay in inlet pressure to initiate the change in regulated pressure.

ATTENDEES:

NAME	GROUP	DEPT. NO.
H. W. Groth	NASA-LeRC	
F. DiPiazza	GD-C Sycamore	976-1
D. Huber	Dynamics	585-2
J. Bard	GD-C Parts Engineering	562-2
S. Kaye	Space Science	596-0
L. W. Standley	Design Review	672-0
C. W. Aulgur	Pneumatics Design	664-0
M. J. Braun	NASA-LeRC	
G. R. Smolak	NASA-LeRC	
D. E. Howard	Pneumatics Design	664-0
D. L. Gray	Pneumatics Design	664-0
D. R. Thomas	Design Review	672-0
H. W. Schmidt	NASA-LeRC	
H. Douglass	NASA-LeRC	
M. Hurley	Dynamics	585-2
R. Johansen	Pneumatics Design	664-0

DISTRIBUTION:

J. H. Winters	145-0	T. J. O'Malley	571-0 ETR
W. A. Pickens	562-2	D. Williams	571-1 ETR
G. G. Congdon	674-1	C. Hanna	688-0
J. A. Mendoza	674-3	D. Suggs	683-1
W. G. Lux	141-3	Major J. M. Mickelson	AF-71
D. Munizza	576-15 WTR	Major G. L. Claypool	SSD-SSVZE(5)
C. A. Johnston	576-1 WTR	L. Weikum	671-0
T. Hemphill	561-0	E. Hujsak	962-1
F. Heid	NASA	A. E. Buggele	NASA

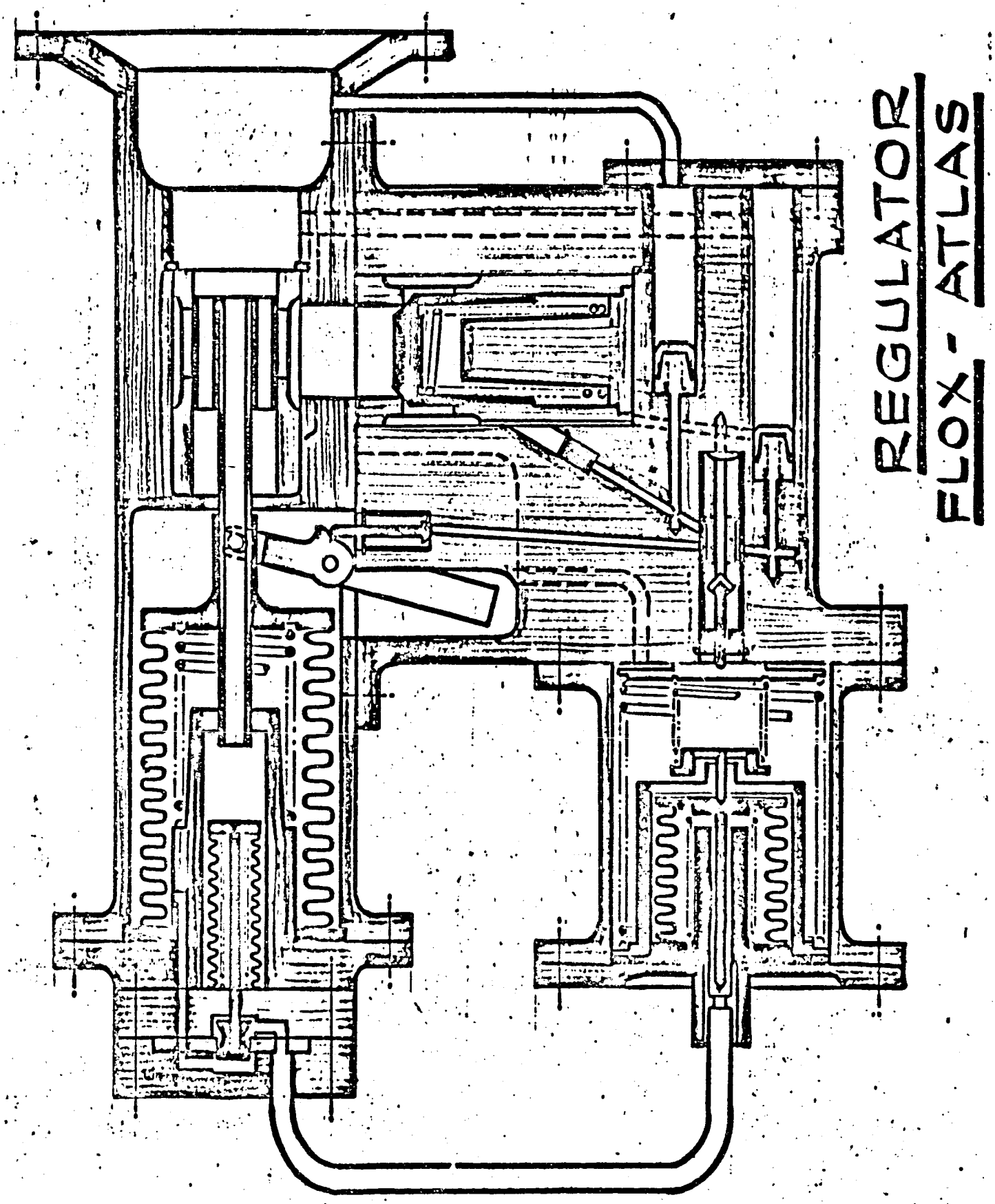

FIGURE 1.

PERFORMANCE SPECIFICATION

OXIDIZER TANK HELIUM PRESSURE REGULATOR

FOR A FLOX-ATLAS VEHICLE

PRELIMINARY DESIGN

SPECIFICATION

25 JUNE 1965

CONTRACT NUMBER NAS 3-3245

TCP 8401 NASA/LeRC

TASK ORDER #4

PREPARED BY A. M. Colvin
A. M. COLVIN
DESIGN SPECIALIST

APPROVED BY H. E. Wright
H. E. WRIGHT
ASS'T CHIEF DESIGN
ENGINEER - FLUIDS

APPROVED BY W. A. Roberts
W. A. ROBERTS
ASS'T PROJECT ENGINEER
FLOX - ATLAS

APPROVED BY for M. E. STONE
M. E. STONE
CHIEF OF SYSTEMS
REQUIREMENTS

REVISIONS

NO.	DATE	BY	CHANGE	PAGES
A	7/22/5	D. L. Gray D. L. Gray a.m.h. D. Gibson W. Bolt	Delete TFE Spray Add 2.1.1.8 Add 2.1.2 Revise 3.1.2 Change Page Nos.	3 4 4 5 5 & on
B	10/21/65	D. Howard	Revise Para. 3.3.6.1, Extern. leakage	7

ABSTRACT

This document describes the performance specifications for a vehicle-borne FLOX-Atlas oxidizer tank pressure regulator to be located on top of the Atlas oxidizer tank within the Atlas/Centaur clearance envelope. The regulator shall regulate the flow of helium into an increasing tank ullage to maintain the pressure specified in the design requirements from initiation of vehicle-borne pneumatic control (internal pneumatics) to booster engine cut-off (BECO). The helium supply source is jettisoned at BECO.

PERFORMANCE SPECIFICATION
OXIDIZER TANK HELIUM PRESSURE REGULATOR
FOR A FLOX-ATLAS VEHICLE

1.0 INTRODUCTION

1.1 Scope

This document specifies the design criteria for the FLOX oxidizer tank pressure regulator and establishes the basic capability of the component to perform the necessary functions. It shall serve as the internal control for design in order to maintain compatibility with requirements of the pneumatic system.

1.2 Applicable Documents

In addition to the requirements stated herein, the regulator shall also be designed to conform to the general requirements specified in the documents listed below:

A. Military Specifications

Mil-E-5272A 16 September 1952	Environmental Testing, Aeronautical and Associated Equipment
Mil-P-27401B 19 September 1962	Propellant-Nitrogen Pressurizing
U.S. Bureau of Mines Grade-A	Helium Gas

B. Publications

Air Force-Navy-Aeronautical Bulletins

143d 19 August 1954	Specifications and Standards, Use of

Contractor

0-75002	Cleaning Procedures - Liquid Oxygen System Components
0-75019	Packaging of Missile System Components

1.0 INTRODUCTION (continued)

1.2 B. (continued)

FLOX-00909 18 March 1965	Coating Polytetrafluoroethylene Primer and Clear Finish Application of
7-00209B 1 March 1958	Environmental Design Conditions and Environmental Test Procedures for WS-107A-1 Equipments, Specification for
69-00202B 21 January 1964	Environmental Design and Test Criteria Specification for Space Launch Vehicles Vehicleborne and Aerospace Ground Equipment

2.0 REQUIREMENTS

2.1 Design Requirements - General

2.1.1 Materials - Materials in contact with FLOX vapor or liquid shall be compatible with liquid or gaseous oxygen and liquid and gaseous fluorine in any mixture ratio.

2.1.1.1 Metals - Only metallic bellows or diaphrams and metallic static seals shall be specified.

2.1.1.2 Lubrication - The regulator shall be designed to function properly without lubrication of any parts and/or assembly,

2.1.1.3 Screw Threads - Threaded detail parts shall be specified only as required to substantially simplify the design.

2.1.1.4 Decontamination Requirements - Prime consideration in design shall be given to providing for ease of cleaning, purging, inspection, and contamination control.

2.0 REQUIREMENTS (continued)

2.1 2.1.1 2.1.1.5 Environmental Requirements - The design shall conform to environmental requirements per GD/C Report 69-00202B, 21 January 1964.

2.1.1.6 Joining - The design shall provide for welding in preference to brazing, however, brazing is not prohibited.

2.1.1.7 FLOX Entrapment - Prime consideration shall be given to minimizing FLOX entrapment within the regulator, for personnel safety purposes during disassembly, after being exposed to a fluorine environment.

2.1.1.8 Passivation - Prime consideration shall be given to provide for ease of passivation, by allowing flow to all cavities which require exposure.

2.1.1.9 Limitations - The following materials shall not be used in the design:

a. Carbon and rubber.
b. Cadmium plating.
c. Titanium.

2.1.2 Electrical Requirements

2.1.2.1 Voltage - Minimum voltage requirement shall be 24 volts (DC).

2.1.2.2 Electrical Bonding - Electrical bonding shall be provided in accordance with specification MIL-B-5087.

2.1.2.3 Receptacles and External Connections - Receptacles shall be in accordance with specification MIL-C-5015, except that contacts shall be gold plated to a minimum thickness of .0001 inches.

2.1.2.4 Dielectric Strength - Electrical components shall be capable of withstanding 100 volts, rms, 60 cycles, between each lead and all other leads when grounded to the case and are not internally connected to the test lead.

2.1.2.5 Insulation Resistance - The insulation resistance shall be not less than 200 megohms when measured between each lead and all other leads when they are grounded to the case and are not internally connected to the test lead.

2.0 REQUIREMENTS (continued)

2.1 2.1.2 2.1.2.6 Grounding - The design and construction of the regulator shall be such that all external parts shall be at ground potential.

2.1.2.7 Sealing - The electrical system shall be isolated from the fluid medium in all respects.

3.0 PERFORMANCE REQUIREMENTS

3.1 Working Fluid

3.1.1 Nonoperating - The regulator shall be designed to function within the requirements of this document after being exposed to the following fluid media.

a. Liquid oxygen and liquid fluorine in any mixture ratio.

b. Gaseous oxygen and gaseous fluorine in any mixture ratio.

c. Dry gaseous nitrogen-the AGE oxidizer tank pressurization fluid media during transportation, standby on launcher, and countdown.

3.1.2 Operating - The regulator shall be designed to function within the requirements of this document with gaseous helium as the oxidizer tank pressurization fluid media during flight.

Quantities of FLOX gas which have bled through the regulator to the inlet system, and are subsequently forced out of the regulator when inlet pressure is applied, shall not cause a regulator malfunction.

3.0 PERFORMANCE REQUIREMENTS (continued)

3.2 Design Pressures

3.2.1 Inlet - The regulator shall be capable of withstanding the following internal inlet pressures at a temperature of +450°F.

a. Operating	3250 psig
b. Proof	4350 psig
c. Burst	5400 psig

3.2.2 Outlet - The regulator shall be capable of withstanding the following internal outlet pressures at a temperature of 450°F.

a. Operating	35 psig
b. Proof	53 psig
c. Burst	70 psig

3.2.3 Regulation - The regulator shall be capable of maintaining the oxidizer tank ullage pressure between the upper and lower limits specified as a function of time in Figure I. These curves define the oxidizer tank pressure functional requirements for satisfactory launch vehicle operation. (The functional analysis took into account intermediate bulkhead ΔP, tank load carrying capability and engine system NPSH.) It is additionally required to maintain this pressure close to the limit with as tight a tolerance as is permitted by design practice during the maximum dynamic pressure (60 to 80 sec.) and maximum acceleration (130 seconds to BECO) regions. This will fully utilize the load carrying capability of the structure with a high degree of predictability. Following BECO, there is sufficient FLOX boiloff to sustain tank pressure requirements so that pressure regulation is not required.

3.2.4 Inlet Supply - The regulator shall be capable of maintaining oxidizer tank ullage pressure with the inlet helium pressure decaying from 3000 psig at engine start to 75 psig at BECO.

3.2.4.1 Helium Gas Temperature - The design temperature of the gaseous helium at the regulator inlet shall be -50°F at engine start increasing to +450°F at 30 seconds of flight and remaining at this temperature until BECO.

3.3 Flow Requirements

3.3.1 Flow Rate - The regulator shall adequately maintain ullage pressure from no flow before engine start to a maximum ullage increase rate of 15 cubic feet per second from engine start to BECO.

3.3.2 Flow Limitation - The regulator shall incorporate a separate controller capable of limiting the gaseous helium flow to the oxidizer ullage to 0.75 pounds per second maximum with the helium inlet temperature at +150°F and the inlet pressure per Paragraph 3.2.4.

This page double imaged

ok

3.0 PERFORMANCE REQUIREMENTS (continued)

3.3 3.3.3 Response - The regulator response rate shall be sufficient to maintain the oxidizer tank ullage pressure per Figure 1 during the start sequence of the Atlas Rocketdyne engine system with an initial tank ullage of 25 cubic feet.

3.3.4 Lock-Up Flow - The combined internal leakage and bleed from the inlet to outlet side of the regulator shall not exceed 1000 SCIM of helium gas when the ullage tank pressure is above the regulation band (lock-up).

3.3.5 Back Flow - The leakage from the outlet to the inlet side of the regulator shall not exceed 1000 SCIM at any outlet pressure up to proof pressure and zero inlet pressure.

3.3.6 Leakage

3.3.6.1 External - The external leakage shall not exceed 35,000 SCIMS with outlet pressure above 20 psig. (B) The external bleed shall be collected at one part on the regulator for transfer to the boiloff valve vent duct.

3.3.6.2 Internal - The internal leakage is specified in Paragraphs 3.3.4 and 3.3.5.

4.0 ENVIRONMENTAL REQUIREMENTS

4.1 General

The requirements of GD/C Report 69-00202B shall apply to the design of the regulator except as noted in Paragraphs 4.2 and 4.3.

4.2 Storage and Transportation Environments

The regulator shall be capable of safe storage and transportation without impairment of capabilities from the effects of non-operating environments specified in GD/A Report 7-00209B, Paragraph 3.1

4.3 Vibration

The regulator shall be designed to conform to the Atlas/Centaur adapter area (airframe mounted equipment) simultaneously combined sinusoidal/random vibration as shown in Figures II, III, and IV.

5.0 LIMITATION

5.1 Weight and Size - The weight and size of the regulator shall be held to a minimum consistent with good design practices. Ten pounds maximum shall be the design weight guide line.

5.2 Installation - The regulator shall be designed to be located on top of the Atlas oxidizer tank within the existing Atlas/Centaur clearance envelope.

5.3 Dynamic Stability - The dynamic characteristics of the regulator shall be compatible with other elements in the control loop and shall not produce an instability. The block diagram of Figure V shows the relationship of the regulator to the other elements of the control loop. The magnitude ratio and phase plots of 1/A(S) defines the dynamic characteristics of the balance of the elements in the control loop for t=0, (approximately 2½ seconds after engine start). For example, the dynamics of a typical regulator which meets the dynamic requirement at t=0 is plotted. The gain of this regulator crosses the system characteristics at 2.9 rad/sec which shows a phase margin of 47 degrees. The phase cross-over of 13½ rad/sec shows a gain margin of .91 or 21 db. Both requirements of phase and gain margin must be simultaneously satisfied. The gain level of 1/A(S) changes with flight time which adjusts the system requirements gain curve to t=10 and t≥20 sec as shown on Figure V. The regulator dynamics shall exhibit the indicated gain and phase margin for all flight times as shown in Figure V.

K+E 10 X 10 TO THE ½ INCH KEUFFEL & ESSER CO. ALBANENE ® 359T-11 MADE IN U.S.A.

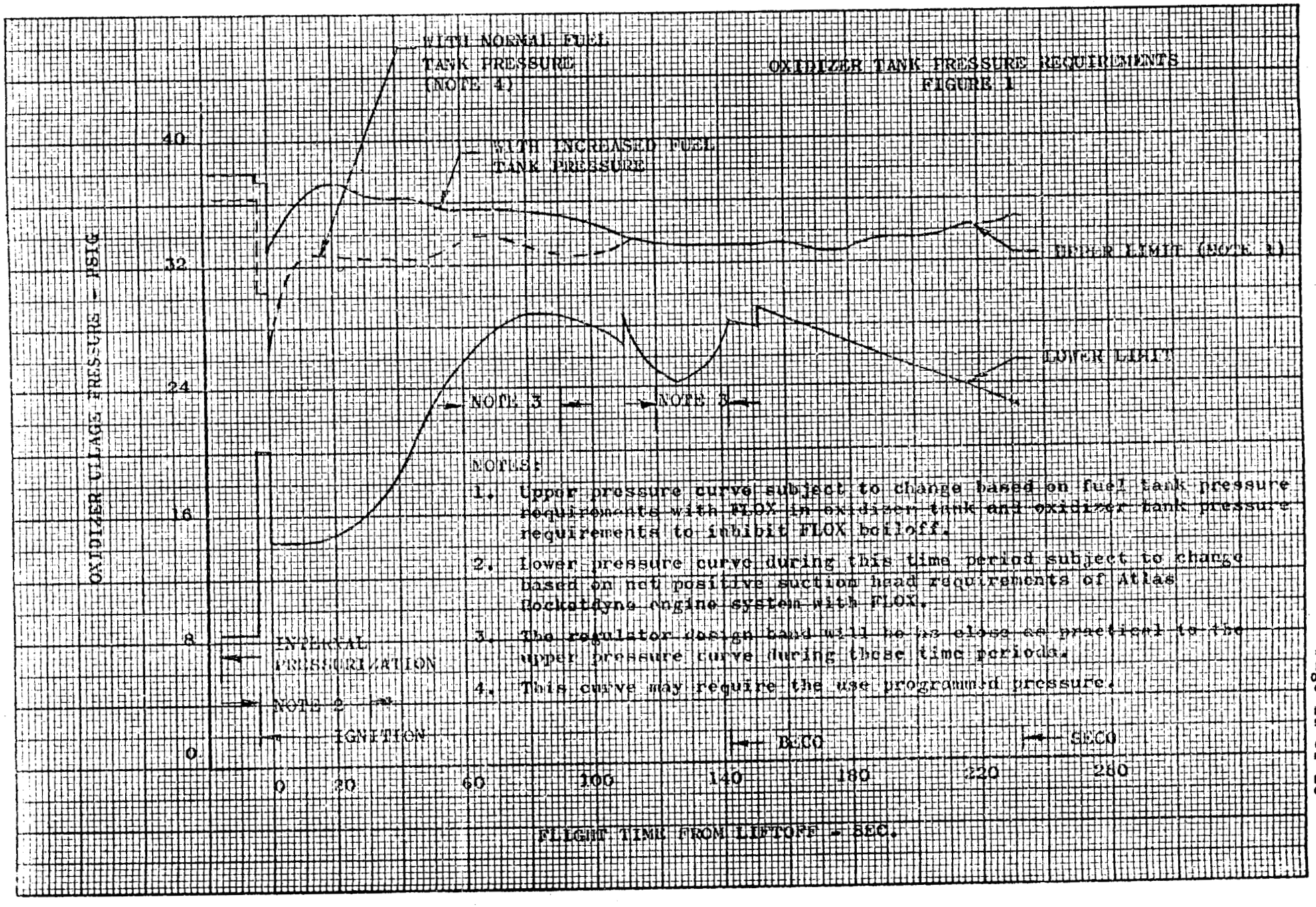

OXIDIZER TANK PRESSURE REQUIREMENTS
FIGURE 1

NOTES:

1. Upper pressure curve subject to change based on fuel tank pressure requirements with FLOX in oxidizer tank and oxidizer tank pressure requirements to inhibit FLOX boiloff.
2. Lower pressure curve during this time period subject to change based on net positive suction head requirements of Atlas Rocketdyne engine system with FLOX.
3. The regulator design band will be as close as practical to the upper pressure curve during these time periods.
4. This curve may require the use programmed pressure.

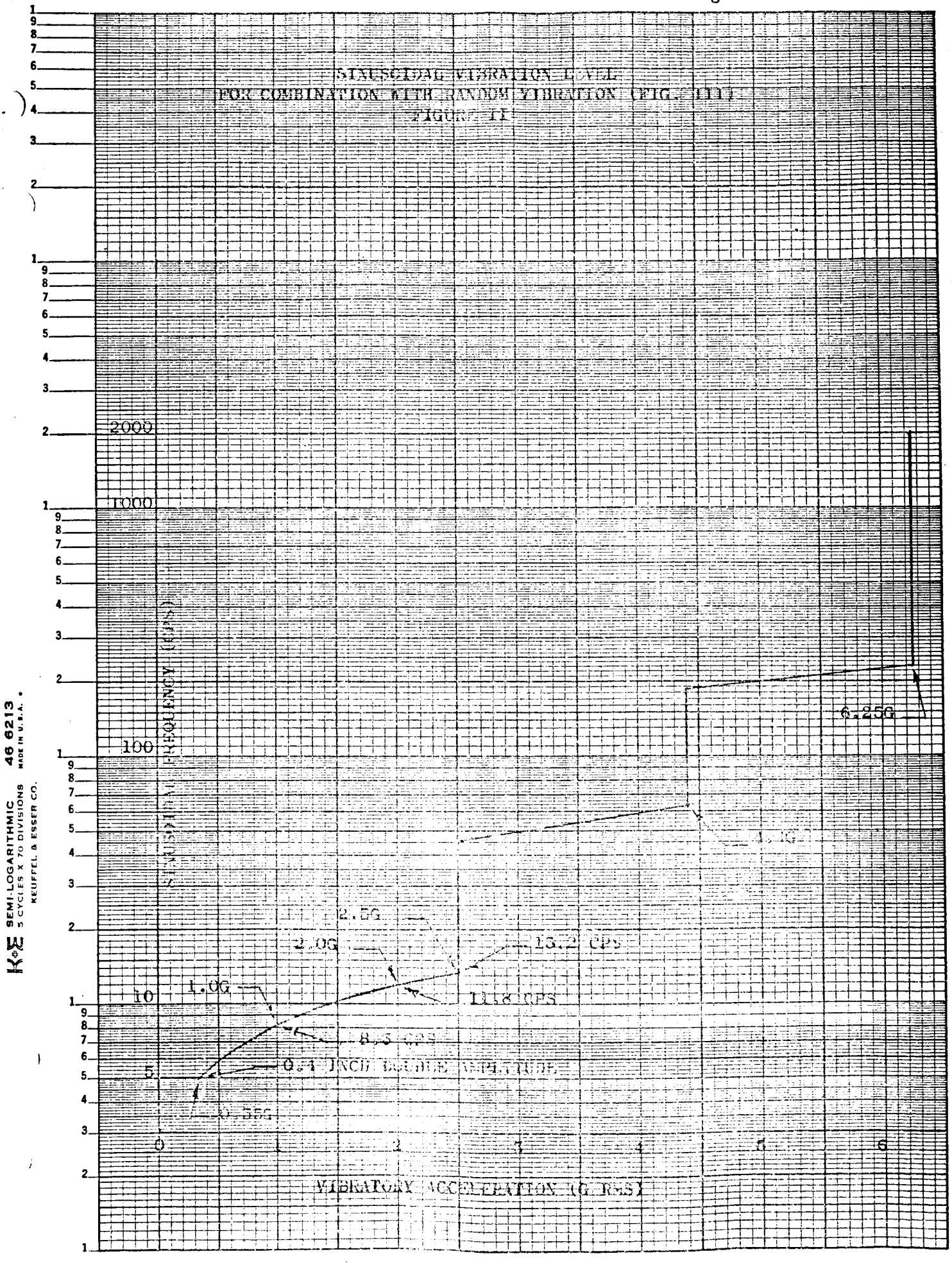
SINUSOIDAL VIBRATION LEVEL
FOR COMBINATION WITH RANDOM VIBRATION (FIG. III)
FIGURE II
FREQUENCY (CPS)
2000
1000
100
10
5
0
1
2
3
4
5
6
VIBRATORY ACCELERATION (G, RMS)
6.25G
1.0G
2.5G
2.0G
13.2 CPS
1.0G
11.8 CPS
8.5 CPS
0.4 INCH DOUBLE AMPLITUDE
0.55G
SEMI-LOGARITHMIC
5 CYCLES X 70 DIVISIONS
KEUFFEL & ESSER CO.
46 6213
MADE IN U.S.A.

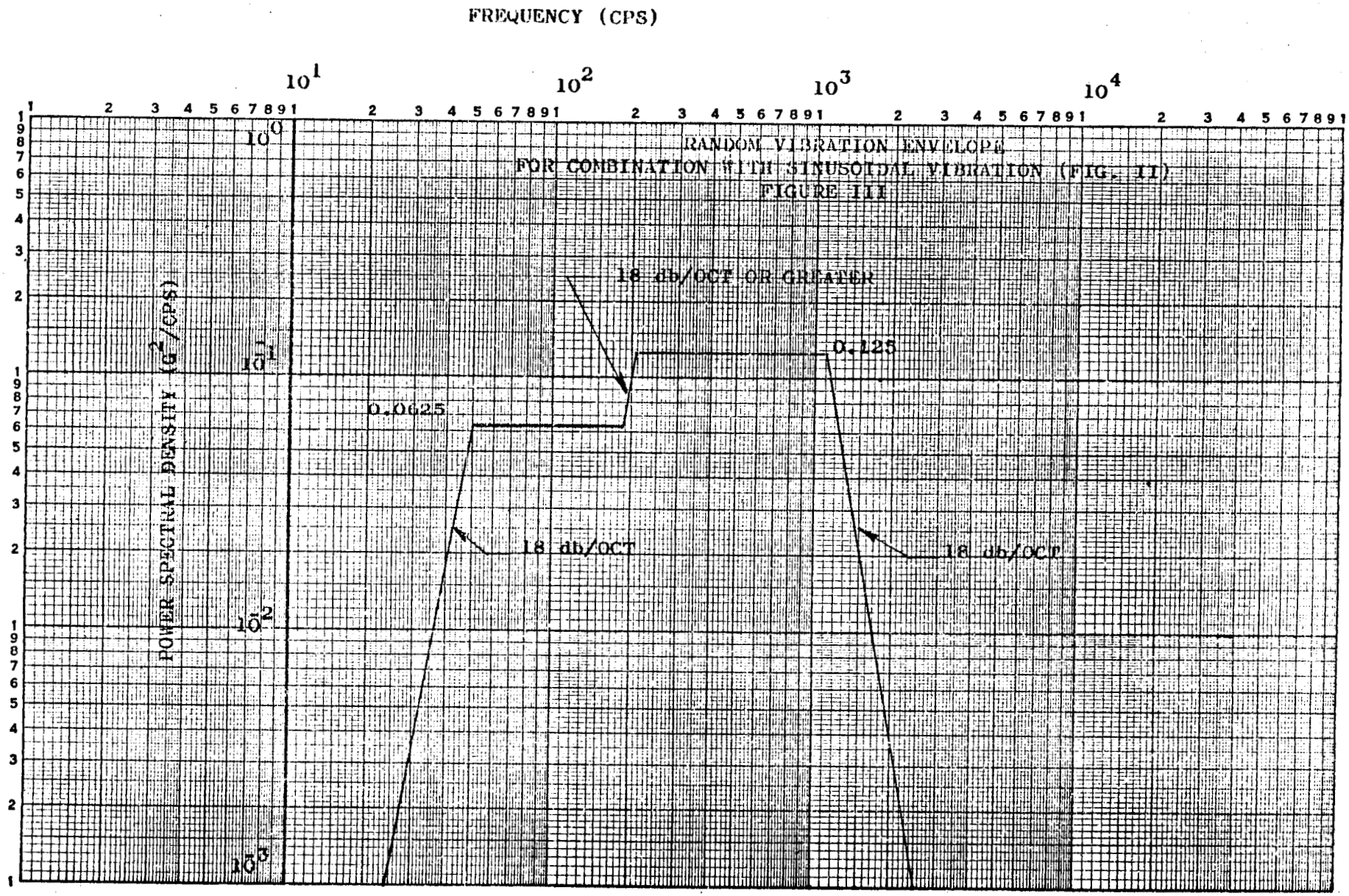
K+E LOGARITHMIC 359-125G
KEUFFEL & ESSER CO. MADE IN U.S.A.
3 X 8 CYCLES
FREQUENCY (CPS)
10^1
10^2
10^3
10^4
10^0
10^{-1}
10^{-2}
10^{-3}
POWER SPECTRAL DENSITY (G^2/CPS)
RANDOM VIBRATION ENVELOPE
FOR COMBINATION WITH SINUSOIDAL VIBRATION (FIG. 11)
FIGURE 111
18 db/OCT OR GREATER
0.125
0.0625
18 db/OCT
18 db/OCT

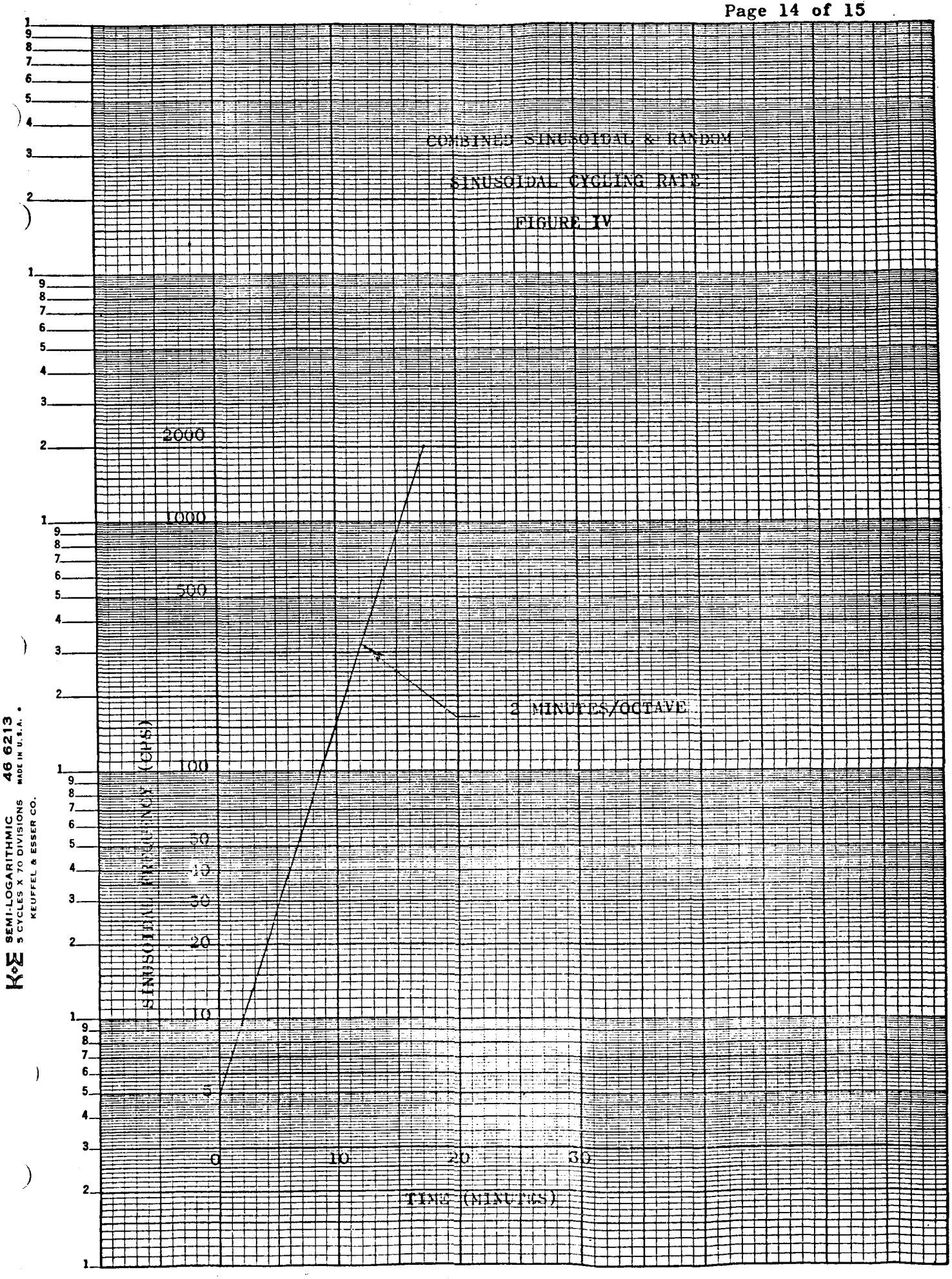
COMBINED SINUSOIDAL & RANDOM
SINUSOIDAL CYCLING RATE
FIGURE IV
2000
1000
500
100
50
40
30
20
10
5
0
10
20
30
2 MINUTES/OCTAVE
SINUSOIDAL FREQUENCY (CPS)
TIME (MINUTES)
K+E SEMI-LOGARITHMIC 46 6213
5 CYCLES X 70 DIVISIONS MADE IN U.S.A.
KEUFFEL & ESSER CO.

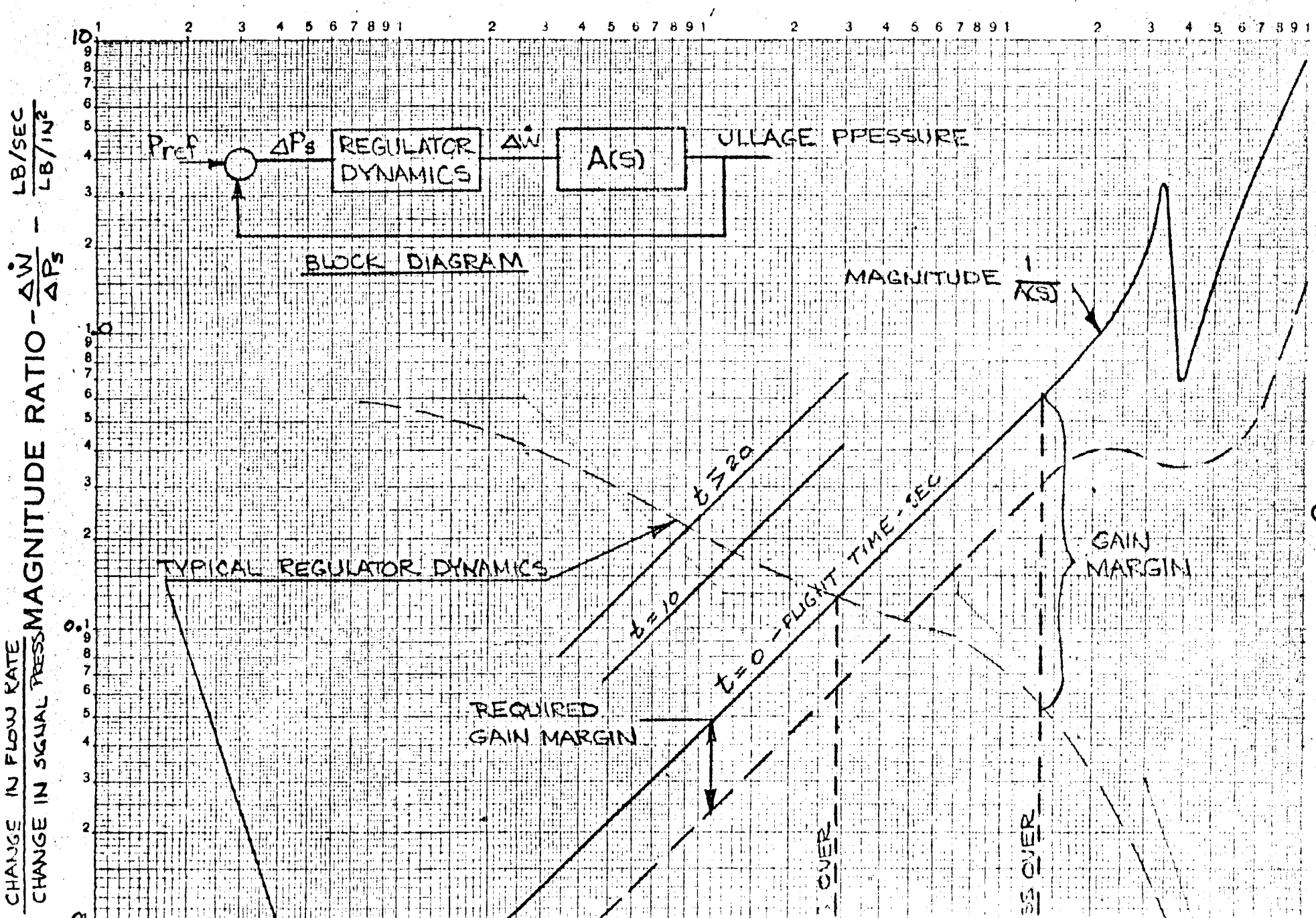
MAGNITUDE RATIO - $\frac{\Delta \dot{W}}{\Delta P_s}$ - $\frac{\text{LB/SEC}}{\text{LB/IN}^2}$
$\frac{\text{CHANGE IN FLOW RATE}}{\text{CHANGE IN SIGNAL PRESS}}$
P_{ref}
ΔP_s
REGULATOR DYNAMICS
$\Delta \dot{W}$
A(S)
ULLAGE PPESSURE
BLOCK DIAGRAM
MAGNITUDE $\frac{1}{A(S)}$
$t \geq 20$
$t = 10$
$t = 0$ - FLIGHT TIME - SEC
TYPICAL REGULATOR DYNAMICS
REQUIRED GAIN MARGIN
GAIN MARGIN
OVER
OVER

Q-51

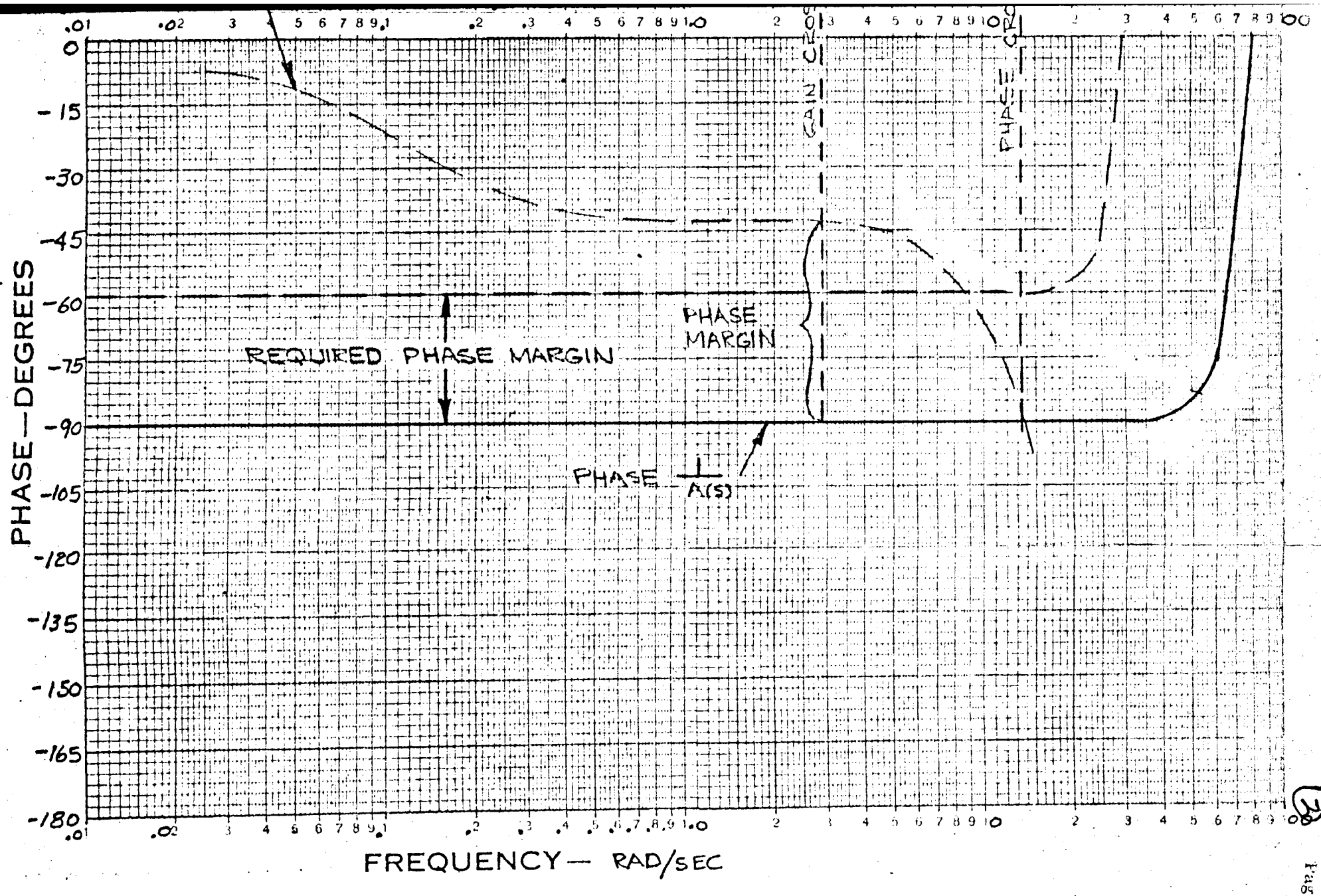

FIGURE V- FREQUENCY RESPONSE DIAGRAM

TEST REQUIREMENTS

OXIDIZER TANK HELIUM PRESSURE REGULATOR

FOR A

FLOX-ATLAS VEHICLE

Prepared by DON HOWARD
D. E. Howard
Sr. Design Engineer

Approved by A. M. Colvin
A. M. Colvin
Design Specialist

Approved by D. L. Gray
D. L. Gray
Sr. Design Engineer

Approved by D. L. Hobart
D. L. Hobart
Design Group Engineer

Approved by W. A. Roberts
W. A. Roberts
Ass't Project Engineer
FLOX-Atlas Project

TABLE OF CONTENTS

		PAGE
1.0	INTRODUCTION	1
1.1	Scope	1
2.0	TEST CONDITIONS	1
2.1	Atmospheric Conditions	1
2.2	Tolerances	1
2.3	Measurements	1
2.4	Adjustments and Repairs During Tests	2
2.5	Temperature Stabilization	2
3.0	CLASSIFICATION OF TESTS	2
3.1	Individual Acceptance Tests	2
3.2	Preproduction Tests	2
3.2.1	FLOX Compatibility	3
3.2.2	Operational	3
4.0	TEST PROCEDURES	4
4.1	Exam of Product	4
4.2	Proof Pressure	4
4.3	Standby Leakage	4
4.4	Operating Leakage	5
4.5	Altitude Flow Regulation	5
4.6	Operating Vibration	6
4.7	Fluorine Compatibility	8
4.8	Extreme Temperature	9
4.9	Operating Acceleration	10
4.10	Temperature Flow	11
4.11	Flow Limitation	12
4.12	Life	12
4.13	Burst	13

1.0 INTRODUCTION

1.1 Scope

This document specifies the testing required on the FLOX-Atlas regulator to demonstrate conformance to the performance specification. (Ref. General Dynamics Convair Report No. BJB 65-008).

2.0 TEST CONDITIONS

2.1 Atmospheric Conditions

Unless otherwise specified herein, all tests shall be performed at an atmospheric pressure between 28 inches and 32 inches of mercury, a temperature between +60°F and 95°F, and a relative humidity of not more than 90%. Data from tests performed at other than the atmospheric conditions specified shall include corrections for instrument compensation.

2.2 Tolerances

The maximum allowable tolerances on test conditions shall be as follows:

a)	Temperature	±4°F, or 6% of temp. span whichever is greater.
b)	Barometric Pressure	±5%
c)	Relative Humidity	±10%
d)	Vibration Amplitude	±10%
e)	Vibration Frequency	±2%
f)	Acceleration	±10%
g)	Shock	±10%
h)	Volume	±3%
i)	Pressure	±3%*
j)	Flow	±3%

* Ullage pressure measurement shall be certified to a readout tolerance of ±0.32 psi (±1% of 32 PSIG).

2.3 Measurements

All measurements shall be made with instruments whose accuracies have been currently certified.

2.4 Adjustments and Repairs During Tests

No adjustments, maintenance, or repairs of the test specimen shall be allowed during the test program. Exceptions shall be made when in the opinion of designated personnel, adjustments, repairs, or maintenance are not due to faults in design, workmanship, materials, or to the test conditions imposed.

2.5 Temperature Stabilization

Temperature stabilization has been reached when the temperature of the largest centrally located mass of the test specimen does not vary more than 5°F from the temperature ambient to the equipment.

3.0 CLASSIFICATION OF TESTS

3.1 Individual Acceptance Tests

Each unit shall be subjected to the Individual Acceptance Tests in the following sequence:

a) Examination of Product

b) Proof Pressure

c) Standby Leakage

d) Operating Leakage

e) Altitude Flow Regulation

f) Operating Vibration - Only the axis determined to be the most critical by the manufacturer.

g) Altitude Flow Regulation

h) Standby Leakage

i) Operating Leakage

3.2 Preproduction Tests

One unit will be subjected to the FLOX Compatibility tests outlined in Paragraph 3.2.1 and one unit will be subjected to the Operational tests outlined in Paragraph 3.2.2. The test units must have successfully passed the Individual Acceptance Tests outlined in Paragraph 3.1 before being subjected to the Preproduction Tests.

3.2.1 FLOX Compatibility - Unit Number 1

a) Examination of Product

b) Passivation

c) Flow Cycles

d) Altitude Flow Regulation

e) Standby Leakage

f) Operating Leakage

3.2.2 Operational - Unit Number 2

a) Examination of Product

b) Altitude Flow Regulation

c) Extreme Temperature

d) Standby Leakage

e) Operating Leakage

f) Operating Vibration

g) Operating Leakage

h) Acceleration

i) Operating Leakage

j) Temperature Flow

k) Operating Leakage

l) Flow Limitation

m) Life

n) Standby Leakage

o) Operating Leakage

p) Burst

4.0 TEST PROCEDURES

4.1 Examination of Product

Examine the test unit visually and manually in order to determine that the specimen meets the requirements of workmanship, identification markings, external dimensions, finish, cleanliness, and proper inspection approval. This examination shall include the following:

a) Workmanship - The specimen shall be free of tool marks and any damage resulting from testing and handling. The lockwiring shall be in accordance with Mil-S-33540.

b) Identification - The name plate shall be firmly affixed to the specimen at a location where it can be readily seen and shall include the following:

Name of Unit: Helium Pressure Regulator - FLOX-Atlas
Part Number:
Inlet pressure rating: 3000 psig
Contract number:
Manufacturer's name or trademark:

c) Finish - The finish of the test specimen shall indicate that it has been properly processed and handled.

d) Cleanliness - Test specimen cleanliness shall be maintained in accordance with the FLOX clean requirements. When not in test, each test specimen shall be protected with port closures and placed in a clean polyethylene bag to prevent contamination.

4.2 Proof Pressure

With the test specimen installed in the test setup of Figure XV, pressurize the outlet port to 53.0 psig and then the inlet port to 4350 psig with ambient temperature dry nitrogen gas and hold for one minute. No damage or deformation allowed.

CAUTION: Depressurize inlet before outlet.

4.3 Standby Leakage

a) With the test specimen installed in the test setup of Figure I or V, cap the specimen inlet port. The specimen leakage chamber shall be sealed for leakage determination.

CAUTION: If Figure I system is used, start helium purge before installing test specimen to prevent moisture contamination of test specimen.

4.3 Standby Leakage (continued)

b) Pressurize the ullage tank with ambient temperature helium gas to a pressure of 30.0 psig with the facility pressurization control unit. Upon obtaining this pressure, secure the pressurization control unit.

c) Allow the tank pressure to decay from 30.0 psig to 2.5 $^{+1.5}_{-0}$ psig.

d) Upon obtaining a tank pressure of 2.5 $^{+1.5}_{-0}$ psig, increase the tank pressure to 9 ± 1 psig with the facility pressurization control unit.

e) Maintain tank pressure at 9 ± 1 psig for a period of five (5) minutes. During this period, measure specimen external leakage by water displacement method and record this leakage as specimen standby leakage. Standby leakage shall not exceed 5 SCC/hour.

4.4 Operating Leakage

a) The test setup for the external leakage test is illustrated in Figure I or V.

CAUTION: If Figure I system is used, start helium purge before installing test specimen to prevent moisture contamination of test specimen.

b) Pressurize the ullage tank by means of the facility pressurization control unit to a pressure between 33.0 and 34.0 psig with ambient temperature helium gas.

c) With the specimen "locked-up" between 33.0 and 34.0 psig, apply a regulated inlet pressure of 3100 ± 100 psig ambient temperature helium gas to the test specimen. Adjust and maintain tank pressure between 32.0 and 33.0 psig by means of the pressurization control unit.

d) Allow the test specimen to operate under no flow conditions for a period of two (2) minutes during which time the external leakage shall be measured on a rotometer and recorded. The leakage shall not exceed 35000 SCIM.

4.5 Altitude Flow Regulation

a) The test setup for the Altitude Flow Regulation Test is illustrated in Figure I.

CAUTION: Start helium purge before installing test specimen to prevent moisture contamination of test specimen.

4.5 Altitude Flow Regulation (continued)

b) Instrumentation - Recorder channel identification and scale ranges shall be as follows: (Paper speed 2.5 mm/sec).

CHANNEL NO.	CHANNEL IDENTIFICATION	SCALE RANGE
1	Ullage pressure to altitude chamber differential pressure	20.0 - 35.0 psig
2	Altitude chamber pressure	14.7 - 0 psig
3	Specimen inlet pressure	0 - 3000 psig
4	Water flow	0 - 10,000 GPM
6	Specimen inlet gas temp.	100°F to 0°F

c) Verify helium purge valves are open.

d) Fill the facility simulated 2500 FT^3 missile tank with water until an ullage volume of 25 $\pm$ 5 cubic feet is obtained.

e) Pressurize the tank by means of the facility pressurization control unit to a pressure between 33.0 and 34.0 psig.

f) With the specimen "locked-up" between 33.0 and 34.0 psig, secure the pressurization control unit and apply inlet pressure of 3000 psig ambient temperature helium to the test specimen.

g) Program inlet pressure per Figure VII, altitude per Figure VIII, and water flow per Figure IX.

h) The test specimen shall maintain tank pressure per Figure VI.

CAUTION: Helium purge must be on whenever test unit is exposed to the simulated FLOX tank to prevent moisture contamination of the test unit.

4.6 Operating Vibration

a) The test setup for the Operating Vibration Test is illustrated in Figure X. The specimen outlet line shall be 4 inch O.D. tubing or hose. The specimen shall be mounted to the fixture through the outlet port mounting flange.

4.6 Operating Vibration (continued)

b) Instrumentation - Instrumentation on recorder channels as required to record ullage tank pressure, test specimen inlet pressure, and vibration input and output.

c) Mount the specimen in the test setup with its "X" axis aligned along the axis of input vibration.

d) Pressurize the 580 cubic foot ullage tank with ambient temperature helium gas to a pressure of 33.0 to 35.0 psig.

e) With the specimen locked-up between 33.0 and 34.0, apply 125 ± 25 psig ambient temperature helium gas to the inlet port of the test specimen and secure the manual pressurization control unit.

f) Adjust the ullage tank bleed valve to obtain a specimen helium flow rate of between 0.015 to 0.025 lbs. per second.

g) While maintaining the above stated conditions, commence the slow speed vibration scanning sweep, at frequencies and amplitudes of combined sinusoidal random vibration as shown in Figure II and III and a sweep period as shown in Figure IV.

h) During this vibration sweep, the test specimen shall maintain the tank pressure between 28.5 and 32.5 psig after initial tank pressure decay into this band.

i) If at any time during the vibration sweep the test specimen fails to function within the band specified, the frequency of vibration at which the malfunction occurs shall be held constant and the acceleration magnitude shall be decreased until the malfunction is no longer evident. These vibration frequencies and acceleration magnitudes shall be recorded on the test data summary sheet and the scanning sweep continued in accordance with part (e).

j) Perform an Altitude Flow Regulation Test.

k) Mount the specimen in the test setup with its "Y" axis aligned along the axis of input vibration.

l) Repeat parts (d) through (j).

m) Mount the specimen in the test setup with its "Z" axis aligned along the axis of input vibration.

n) Repeat parts (d) through (j).

4.7 Fluorine Compatibility

a) The test setup for the compatibility tests is illustrated in Figure XI.

b) Instrumentation - Recorder channel identification and scale ranges for all phases of life testing shall be as follows: (Paper speed 0.5 mm/sec)

CHANNEL NO.	CHANNEL IDENTIFICATION	SCALE RANGE
1	Ullage tank pressure	20.0 - 35.0 psig
2	Specimen inlet pressure	0 - 5000 psig

c) Mount the test specimen in the FLOX clean test setup, and leak check the system while pressurized at 31 psig.

d) Passivate the system in the following manner. Open the shutoff valve to vent the system to the burner. Open the shutoff valves to allow gaseous fluorine to flow through the system. When nitrogen is purged from the system. Close the vent valve.

e) Increase the system pressure according to the following schedule.

1. 5 PSIG, Hold 20 minutes
2. 10 PSIG, Hold 20 minutes
3. 15 PSIG, Hold 20 minutes
4. 20 PSIG, Hold 20 minutes
5. 25 PSIG, Hold 20 minutes
6. 31 PSIG, Hold 20 minutes

Hold pressure at 31 psig for three hours.

4.7 Fluorine Compatibility (continued)

f) Vent system to zero psig through the burner. This completes the passivation of the system and the test specimen.

g) Pressurize the ullage tank to 32 psig, using nitrogen gas.

h) Pressurize the accumulator to 3000 psig with nitrogen gas and close the fill valve.

i) Flow gas from the accumulator through the regulator, through the ullage tank and through the overboard vent at a flow rate of $0.17 \begin{smallmatrix}+0.03\\-0.00\end{smallmatrix}$ pounds per second. Maintain flow until the inlet pressure decreases to 500 psi.

j) Repeat steps (h) and (i) for 100 cycles.

k) Thoroughly purge test specimen and system in preparation for Altitude Flow Regulation.

4.8 Extreme Temperature

The following test sequence shall be conducted in a Temperature Test Chamber in the order specified. A thermocouple shall be placed in good thermal contact on the largest centrally located internal mass within the test specimen, or in any other location necessary to check temperature stabilization.

a) Place the test specimen in the Temperature Altitude Chamber as shown in Figure I and perform an Altitude Flow Regulation test.

CAUTION: Start helium purge before installing test specimen to prevent moisture contamination of test specimen.

b) Reduce chamber temperature to minus 65°F at a rate of 0.75 to 1.25°F per minute.

Maintain the above temperature for a period of not less than 8 hours, or until the test specimen stabilizes, whichever is longer.

Raise chamber temperature to minus 30°F and maintain at this temperature until test specimen temperature stabilizes and perform an Altitude Flow Regulation Test.

c) With the test specimen non-operating increase chamber temperature at the rate of 0.75 to 1.25°F per minute to plus 160°F, and maintain at this temperature for 4 hours or until test specimen temperature stabilizes, whichever is longer and perform an Altitude Flow Regulation Test.

4.8 Extreme Temperature (continued)

d) Return chamber temperature to plus 40°F at a rate of 0.75 to 1.25°F per minute and maintain for a period of 4 hours or until test specimen temperature stabilizes, whichever is greater and perform Altitude Flow Regulation Test.

e) Return chamber temperature to initial ambient condition and maintain these conditions until test specimen temperature stabilizes and perform an Altitude Flow Regulation Test.

4.9 Operating Acceleration

a) The test setup for the operating acceleration test is illustrated in Figure X. The test specimen shall be mounted to a suitable fixture through the outlet port mounting flange.

b) Instrumentation - Recorder channel identification and scale ranges shall be as follows: (Paper speed 1 mm/sec)

CHANNEL NO.	CHANNEL IDENTIFICATION	SCALE RANGE
1	Ullage tank pressure	20.0 - 35.0 psig
2	Specimen acceleration	5 - 15 G's

c) Mount the test specimen in the test setup with its "X" axis outboard of the centrifuge in order to perform the "X" axis acceleration test.

d) Pressurize the 25 cubic foot ullage tank with ambient temperature helium gas to a pressure between 33.0 and 34.0 psig.

e) With the specimen "locked-up" between 33.0 and 34.0 psig, apply an inlet pressure of 300 to 500 psig ambient temperature helium gas to the inlet port of the test specimen. Secure the manual ullage tank pressurization control unit.

f) Adjust the ullage tank bleed valve to obtain a specimen helium flow rate of 0.02 to 0.05 pounds per second.

g) While maintaining the above stated conditions, the centrifuge shall be operated to obtain an acceleration of 10.0 ± 1 G for a period of thirty (30) seconds. The test specimen shall maintain tank pressure between 28.5 and 32.5 psig after initial tank pressure decay into this band.

h) Repeat parts (c) through (g) with the specimen mounted in order to perform acceleration in turn along the X', Y, Y', Z, and Z' axes.

i) Perform Altitude Flow Regulation Test.

4.10 **Temperature Flow**

a) The test setup for the Temperature Flow Test is illustrated in Figure I.

CAUTION: Start helium purge before installing test specimen to prevent moisture contamination of test specimen.

b) Instrumentation - Channel identification and scale ranges shall be as follows: (Paper speed 2.5 mm/sec)

CHANNEL NO.	CHANNEL IDENTIFICATION	SCALE RANGE
1	Ullage pressure	20.0 - 35.0 psig
2	Test specimen inlet pressure	0 - 5000 psig
3	Water flow	0 - 10,000 GPM
4	Test specimen inlet pressure	0 - 500 psig
5	Specimen inlet temperature	-100°F to +600°F
6	Specimen body temperature	-100°F to +500°F

c) Fill the facility simulated liquid oxygen missile tank with water until an ullage of 25 ± 5 cubic feet is obtained.

d) Pressurize the tank by means of the facility pressurization control unit to a pressure between 33.0 and 34.0 psig with ambient temperature helium gas.

e) With the specimen "locked-up" between 33.0 and 34.0 psig, secure the pressurization control unit and apply 3100 ± 100 psig helium gas to the inlet port of the test specimen. Pressure shall increase from zero to 3100 psig within 0.5 seconds.

f) At the end of this period, program inlet pressure per Figure VII, altitude per Figure VIII and water flow per Figure IX. The specimen inlet gas temperature shall reach -50°F during the first five (5) seconds of program. During the second five (5) seconds of program, the specimen inlet temperature shall be maintained between -100°F and 0°F.

g) At the conclusion of this five (5) second period (program time = 10 seconds), increase the specimen inlet gas temperature to 200°F within a ninety (90) second period.

h) Maintain specimen inlet gas temperature at 200°F throughout the remainder of the program.

4.10 Temperature Flow (continued)

i) Repeat parts (c) through (h) using 450°F inlet gas temperature in steps (g) and (h).

j) Perform Altitude Flow Regulation Test.

4.11 Flow Limitation

a) The test setup for the flow limitation test is illustrated in Figure XII or XIII.

b) Instrumentation - Channel identification and scale ranges shall be as follows: (Paper speed 2.5 mm/sec)

CHANNEL NO.	CHANNEL IDENTIFICATION	SCALE RANGE
1	Ullage pressure	20.0 - 35.0 psig
2	Specimen inlet pressure	0 - 5000 psig
3	Nozzle inlet temperature	0 - 100°F
4	Nozzle inlet pressure	0 - 50 psig

c) Fill the facility simulated liquid oxygen missile tank with water until an ullage of 580 cubic feet is obtained if Figure XII system is the test system.

d) Pressurize the ullage by means of the facility pressurization control unit to a pressure between 33.0 and 34.0 psig with ambient temperature helium.

e) With the specimen "locked-up" between 33.0 and 34.0 psig, secure the pressurization control unit and apply 3100 ± 100 psig of ambient temperature helium gas to the inlet port of the test specimen. Minimum pressure source volume shall be twenty-five cubic feet.

f) Initiate an ambient temperature helium gas flow from the ullage tank equivalent to a helium flow of 0.75 pounds per second at 150°F. This helium flow-rate will be measured by an ASME designed flow nozzle.

g) Two seconds after commencing this flow, initiate flow limiting per manufacturer's instructions.

h) Stop the flow when specimen inlet pressure reaches 100 psig.

4.12 Life

a) The test setup for all phases of life testing is illustrated in Figure XIV.

① 14

GENERAL DYNAMICS | ASTRONAUTICS

SCHEMATIC O
ALTITUDE FL
EXTREME TE
TEMPERATURE
EXTERNAL AND

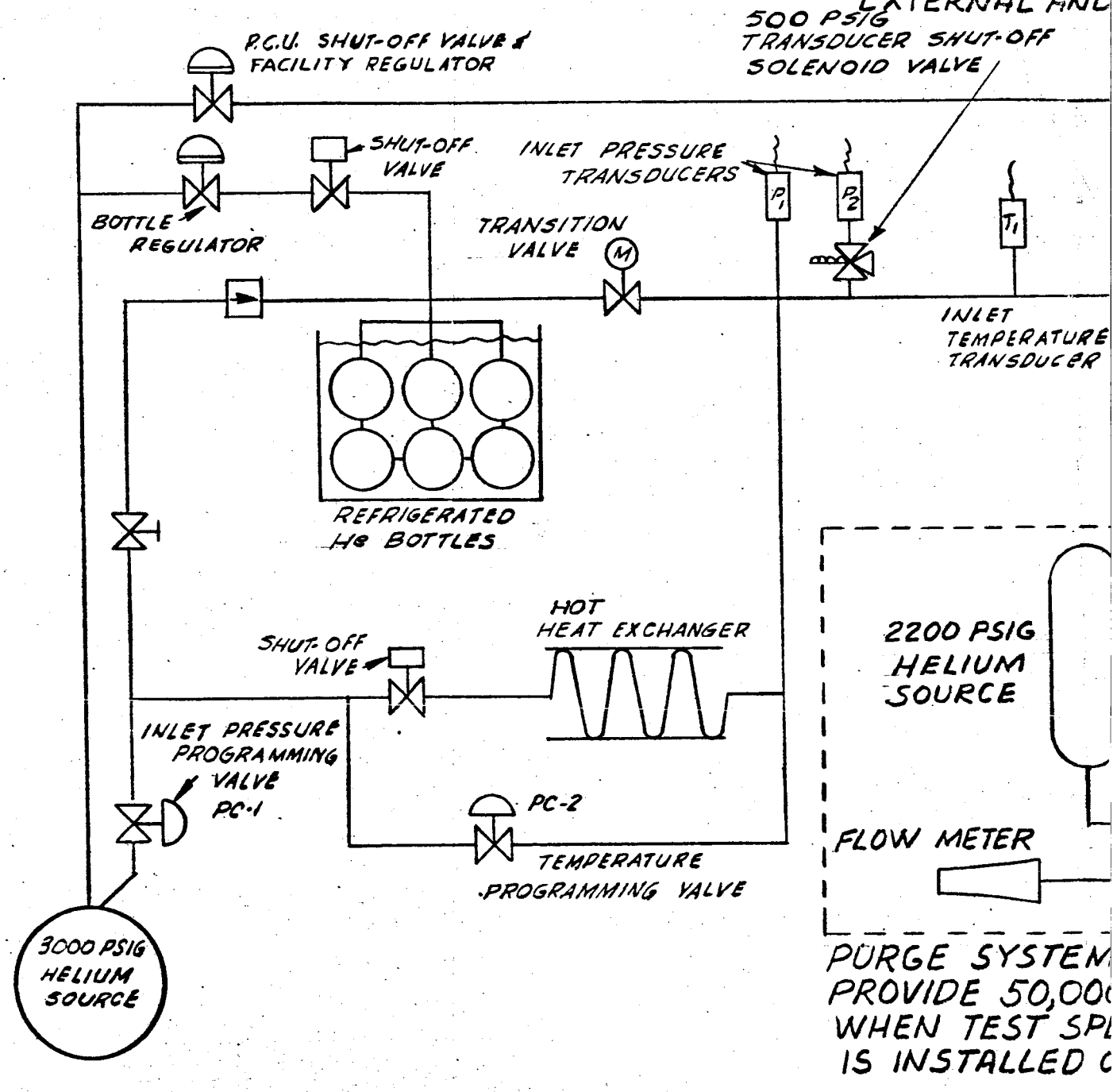

PURGE SYSTEM
PROVIDE 50,000
WHEN TEST SP
IS INSTALLED

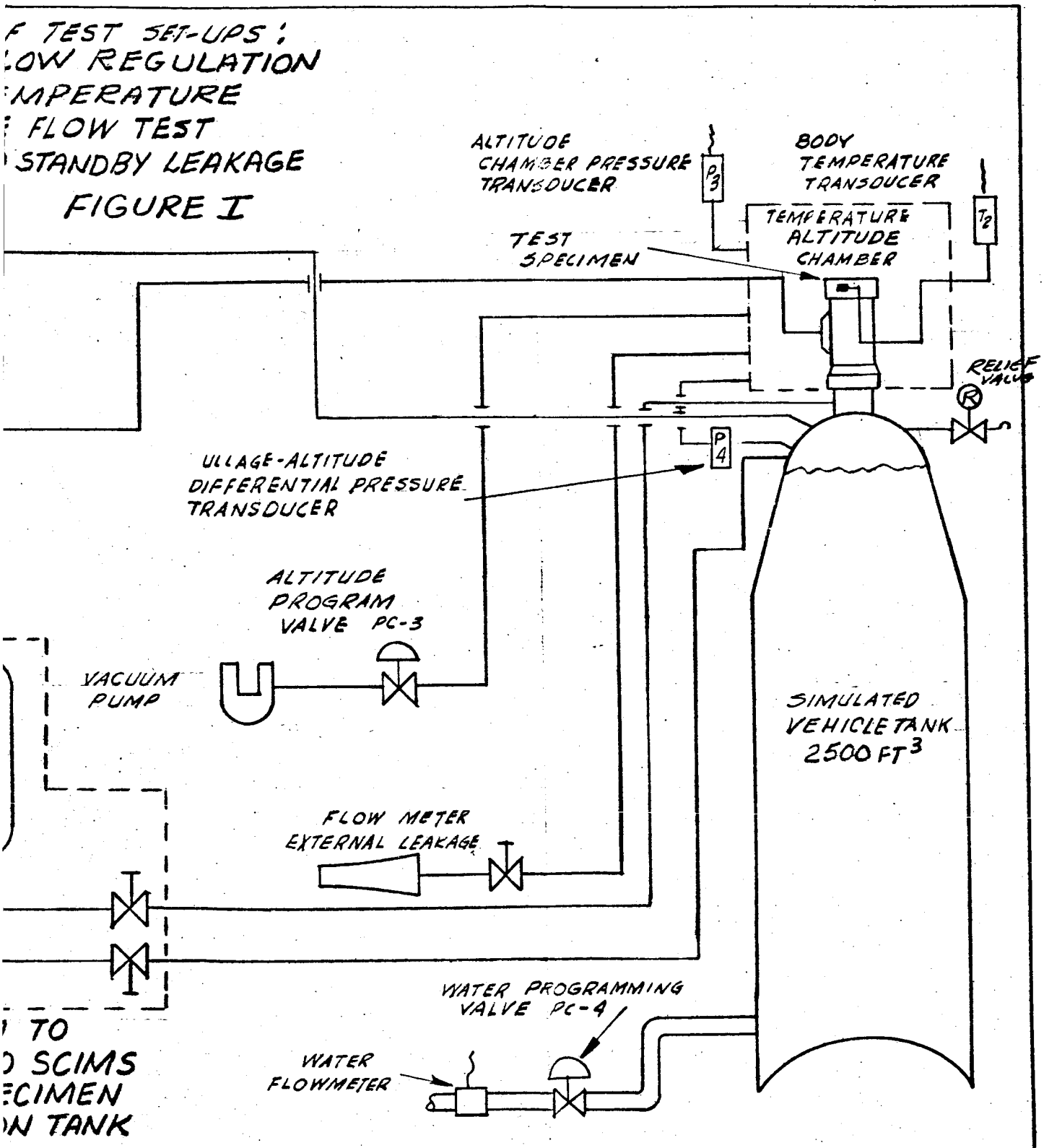

PREPARED BY	DATE	CHECKED BY	DATE	REVISED BY	DATE
R. S. M.	10-15-65				

4.12 Life (continued)

b) Instrumentation - Recorder channel identification and scale ranges for all phases of life testing shall be as follows: (Paper speed 0.5 mm/sec)

CHANNEL NO.	CHANNEL IDENTIFICATION	SCALE RANGE
1	Ullage tank pressure	20.0 - 35.0 psig
2	Specimen inlet pressure	0 - 5000 psig

c) With the specimen installed in the test setup, pressurize the 25 cubic foot ullage tank to 33.0 to 34.0 psig with ambient temperature nitrogen gas or dry air.

d) With the motor valve closed, open the shutoff valve and fill the 5.38 ft^3 reservoir with nitrogen gas or dry air. When the pressure reaches 3000 psi, close the shutoff valve.

e) Secure the pressurization control unit and within 0.5 sec. apply 3100 $\pm$ 100 psig gaseous nitrogen or dry air to the specimen inlet port. Gas temperature shall be 100° $\pm$ 5°F.

f) Open the bleed solenoid valve to obtain an equivalent helium flow of 0.17 $^{+0.03}_{-0.00}$ pounds per second. Flow shall increase from zero to 0.17 pounds per second (equivalent helium flow) within 0.5 seconds. Flow shall be maintained until the regulator shuttle valve operates at approximately 2000 psi inlet.

g) Five seconds after the shuttle valve operates, close the bleed solenoid valve to stop flow.

h) Repeat parts (c) through (g) for a total of 200 cycles performing an Altitude Flow Regulation Test after each fifty (50) cycles.

4.13 Burst

a) The test setup for the burst test is illustrated in Figure XVI.

b) Cap the inlet port and pressurize the outlet port to 70 psig with ambient temperature dry nitrogen gas and hold for 3 minutes.

c) Examine the unit for distortion or damage.

d) Reduce the outlet pressure to 40 psig and maintain this pressure while increasing the inlet pressure to 5400 psig hydrostatically.

e) Hold this pressure for 3 minutes and examine the unit for distortion or damage.

f) Hold the outlet pressure at 40 psig and increase inlet pressure until rupture. Record rupture pressure.

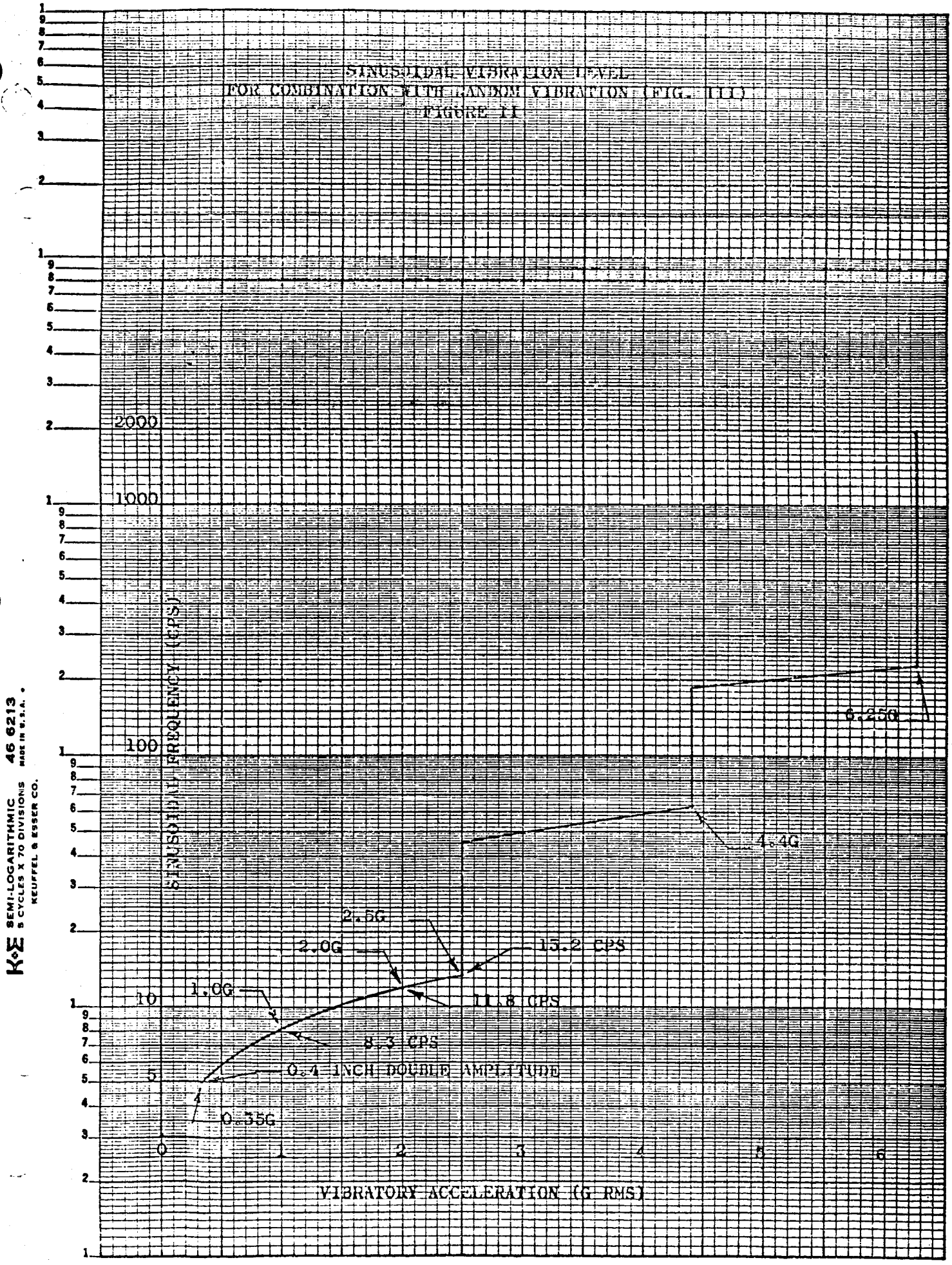
SINUSOIDAL VIBRATION LEVEL
FOR COMBINATION WITH RANDOM VIBRATION (FIG. III)
FIGURE II
SINUSOIDAL FREQUENCY (CPS)
2000
1000
100
10
5
0
1
2
3
4
5
6
6.25G
4.4G
2.5G
2.0G
1.0G
0.35G
15.2 CPS
11.8 CPS
8.3 CPS
0.4 INCH DOUBLE AMPLITUDE
VIBRATORY ACCELERATION (G RMS)
K+E SEMI-LOGARITHMIC 46 6213
5 CYCLES X 70 DIVISIONS MADE IN U.S.A.
KEUFFEL & ESSER CO.

K+E LOGARITHMIC 359-125G
KEUFFEL & ESSER CO. MADE IN U.S.A.
3 X 5 CYCLES

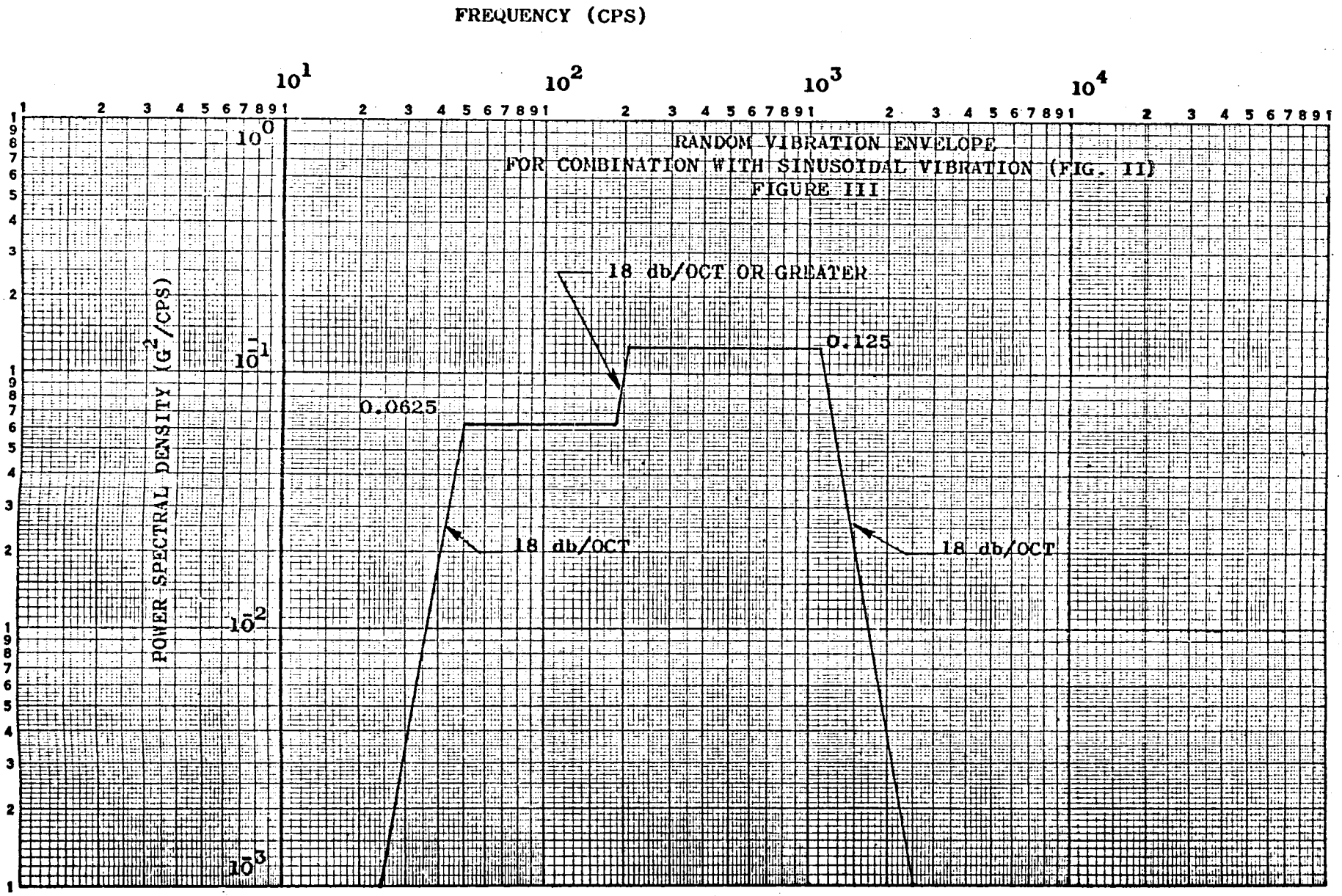

RANDOM VIBRATION ENVELOPE
FOR COMBINATION WITH SINUSOIDAL VIBRATION (FIG. 11)
FIGURE III

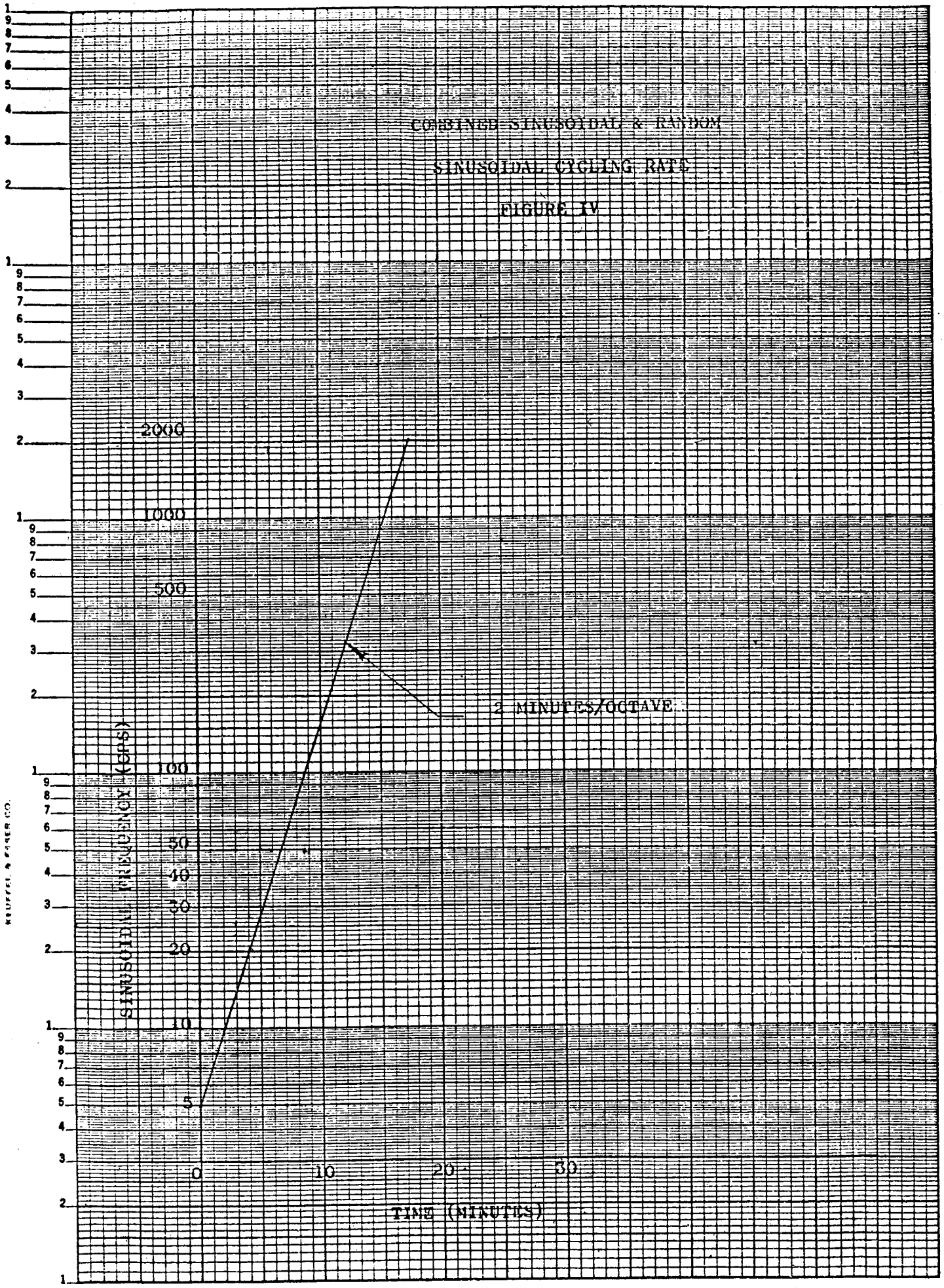
COMBINED SINUSOIDAL & RANDOM
SINUSOIDAL CYCLING RATE
FIGURE IV
2000
1000
500
100
50
40
30
20
10
5
0
10
20
30
2 MINUTES/OCTAVE
SINUSOIDAL FREQUENCY (CPS)
TIME (MINUTES)
SEMI-LOGARITHMIC
46 6213

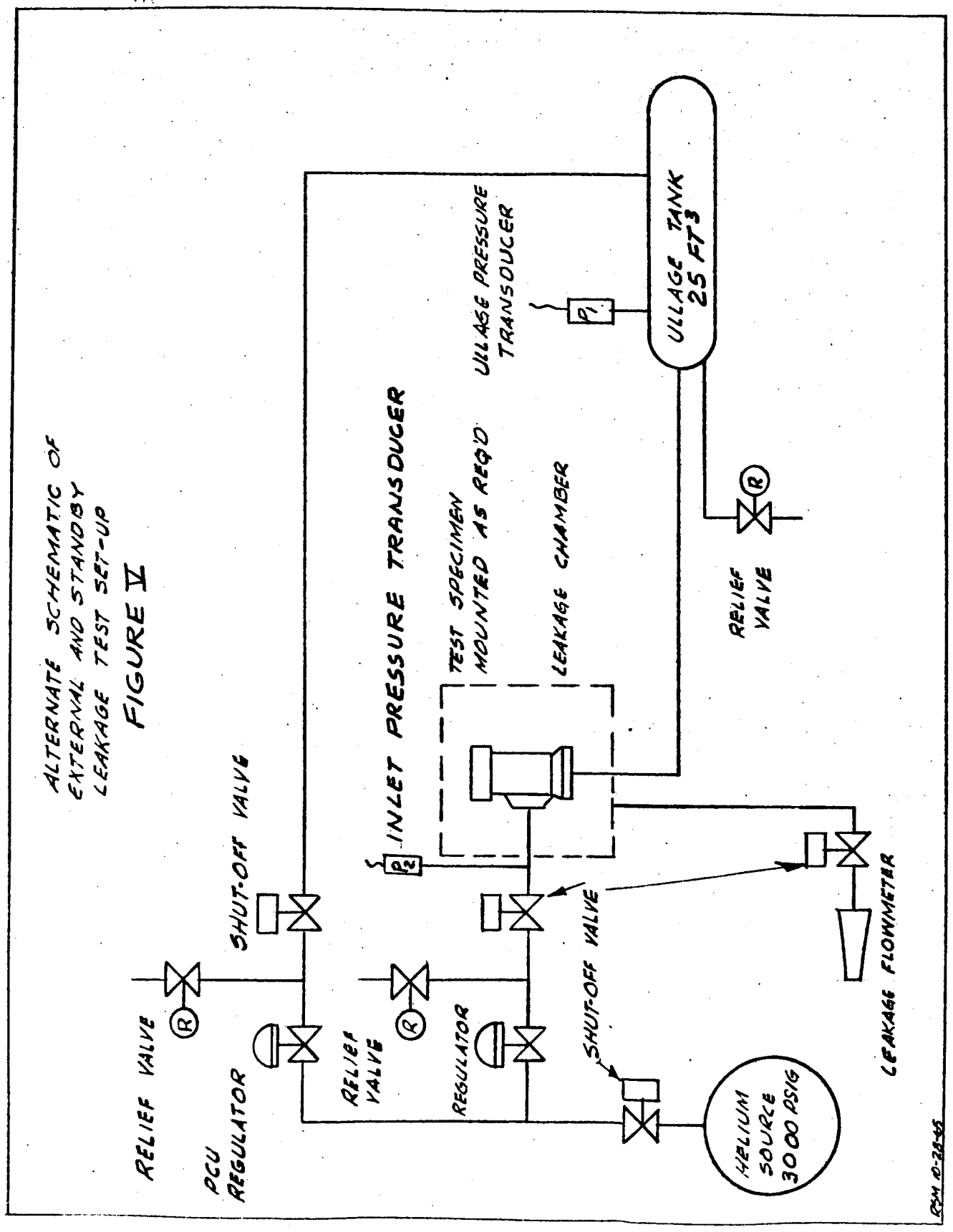

ALTERNATE SCHEMATIC OF EXTERNAL AND STANDBY LEAKAGE TEST SET-UP

FIGURE V

K+E 10 X 10 TO ½ INCH 46 1327
7 X 10 IN. • ALBANENE® MADE IN U.S.A.
KEUFFEL & ESSER CO.

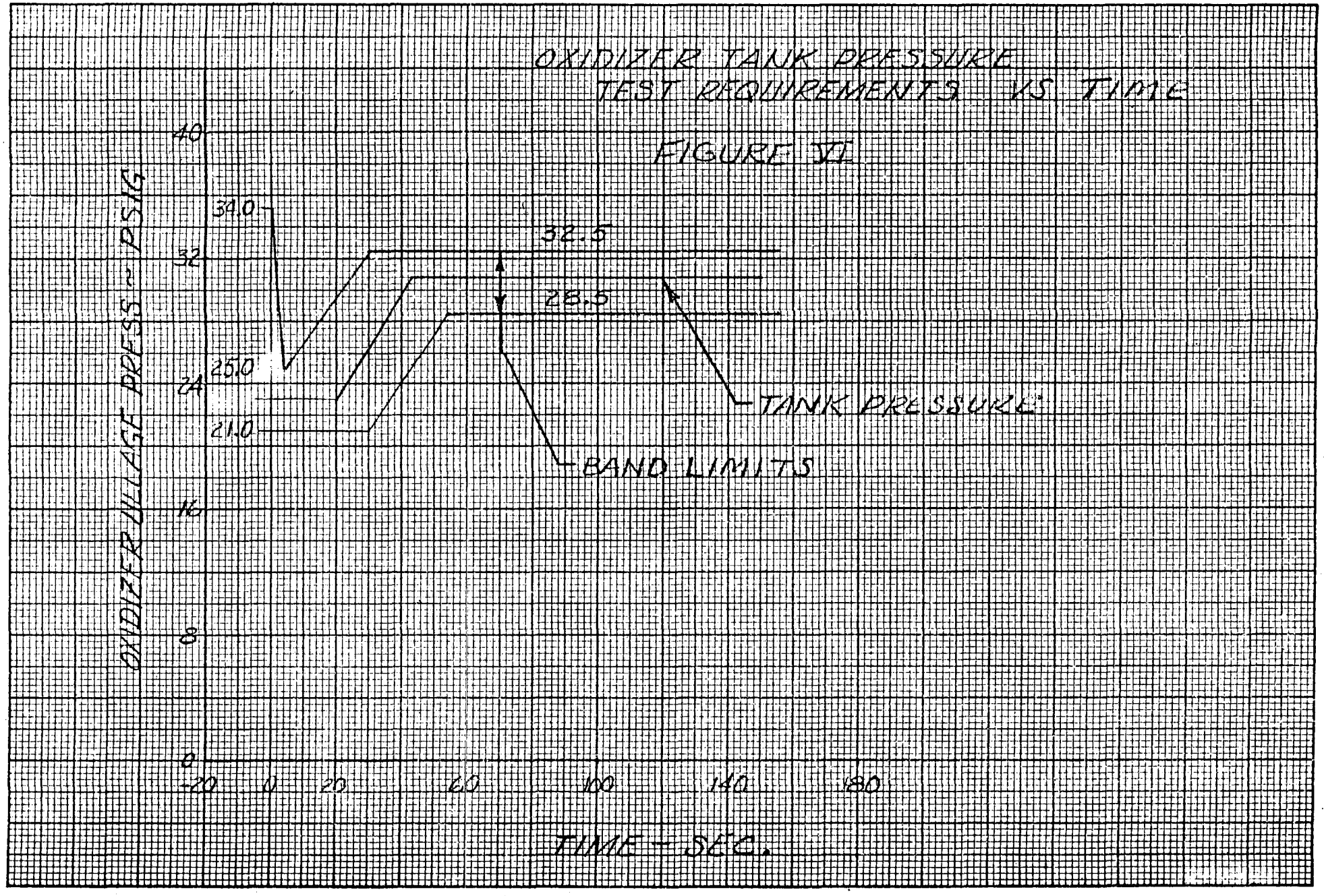

KEUFFEL & ESSER CO. MADE IN U.S.A.
ALBANENE ®

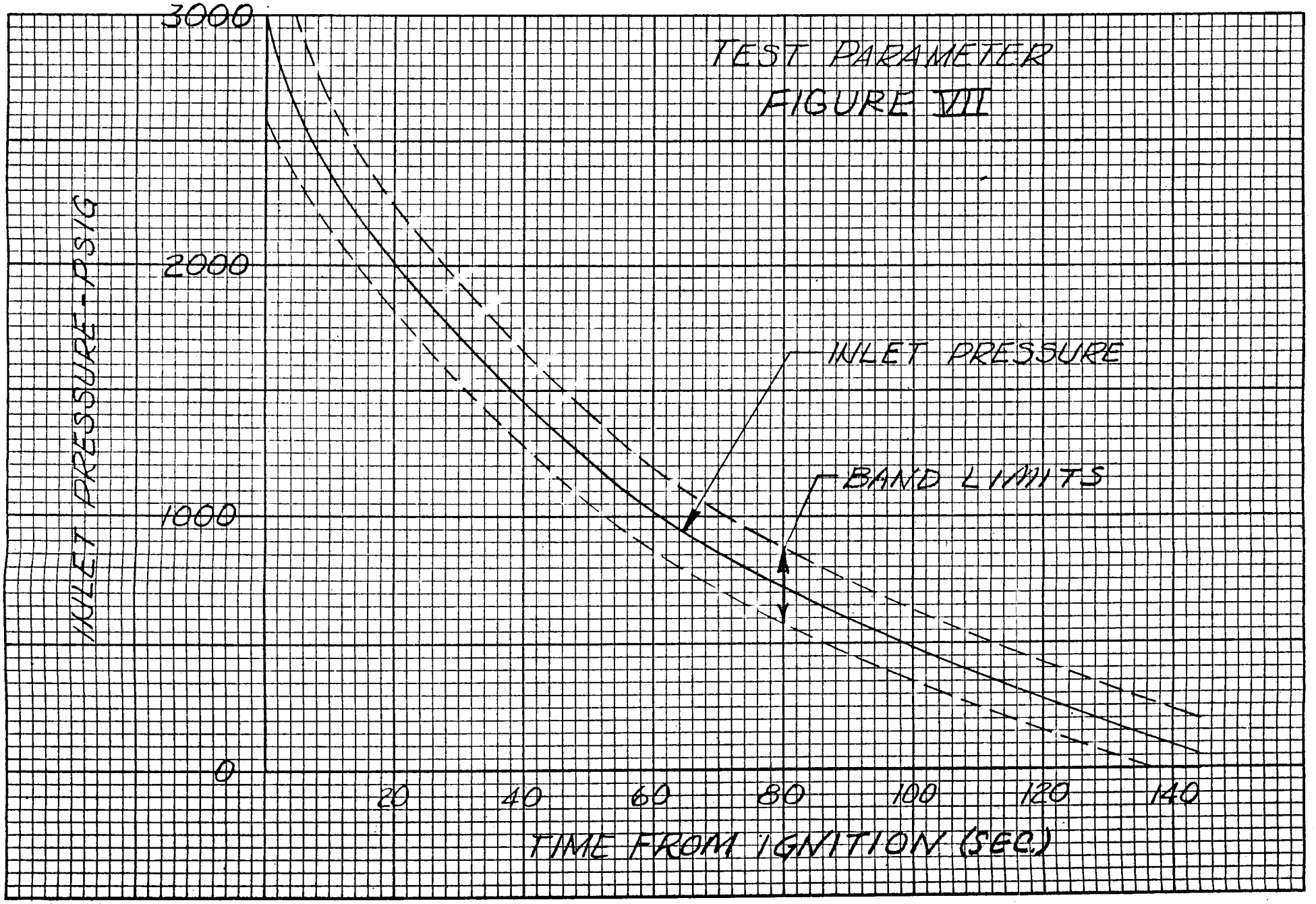

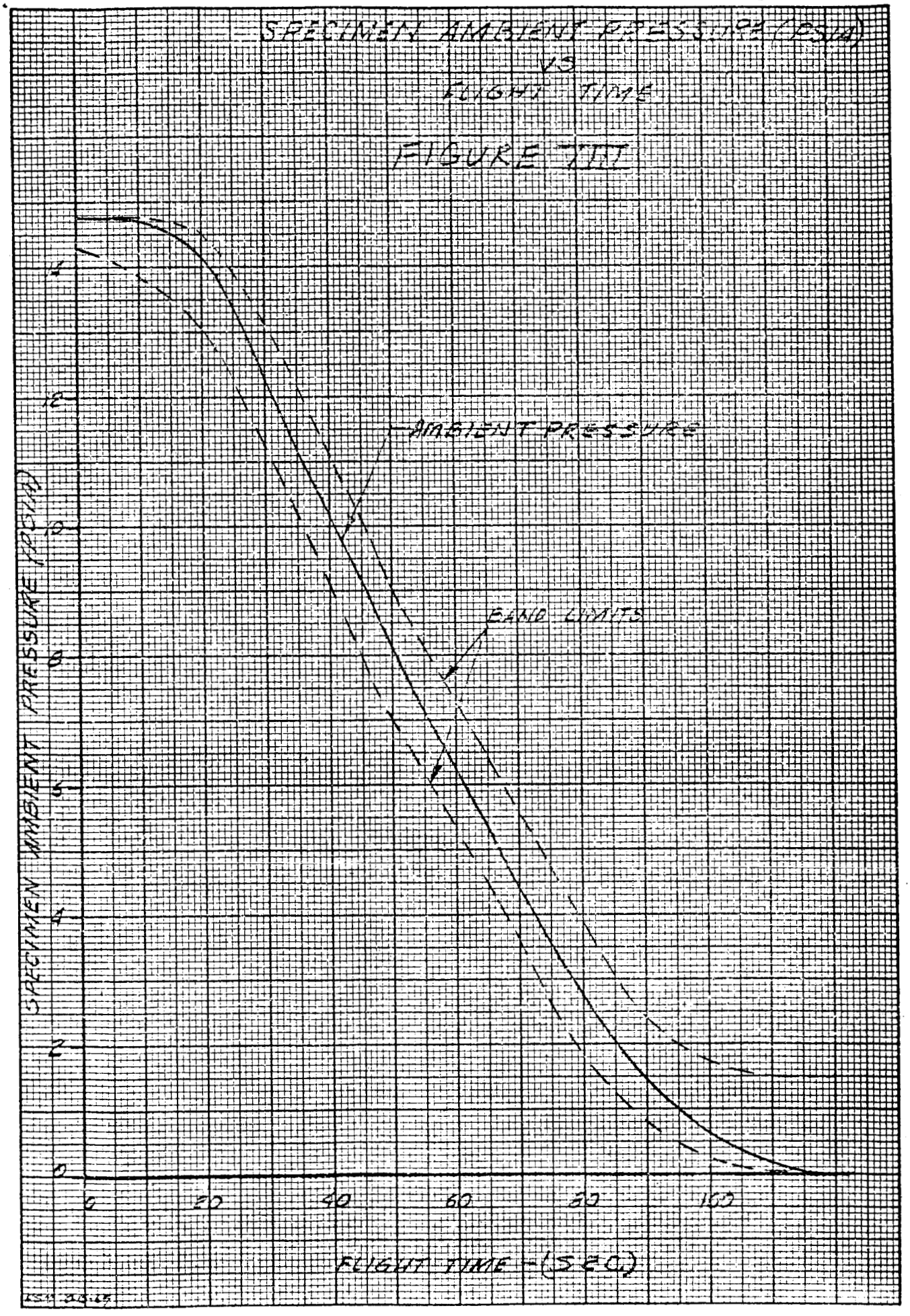

10 X 10 TO ½ INCH 46 1327
7 X 10 IN. • ALBANENE
KEUFFEL & ESSER CO.

K+E 10 X 10 TO ½ INCH 46 1327
7 X 10 IN. • ALBANENE® MADE IN U.S.A.
KEUFFEL & ESSER CO.

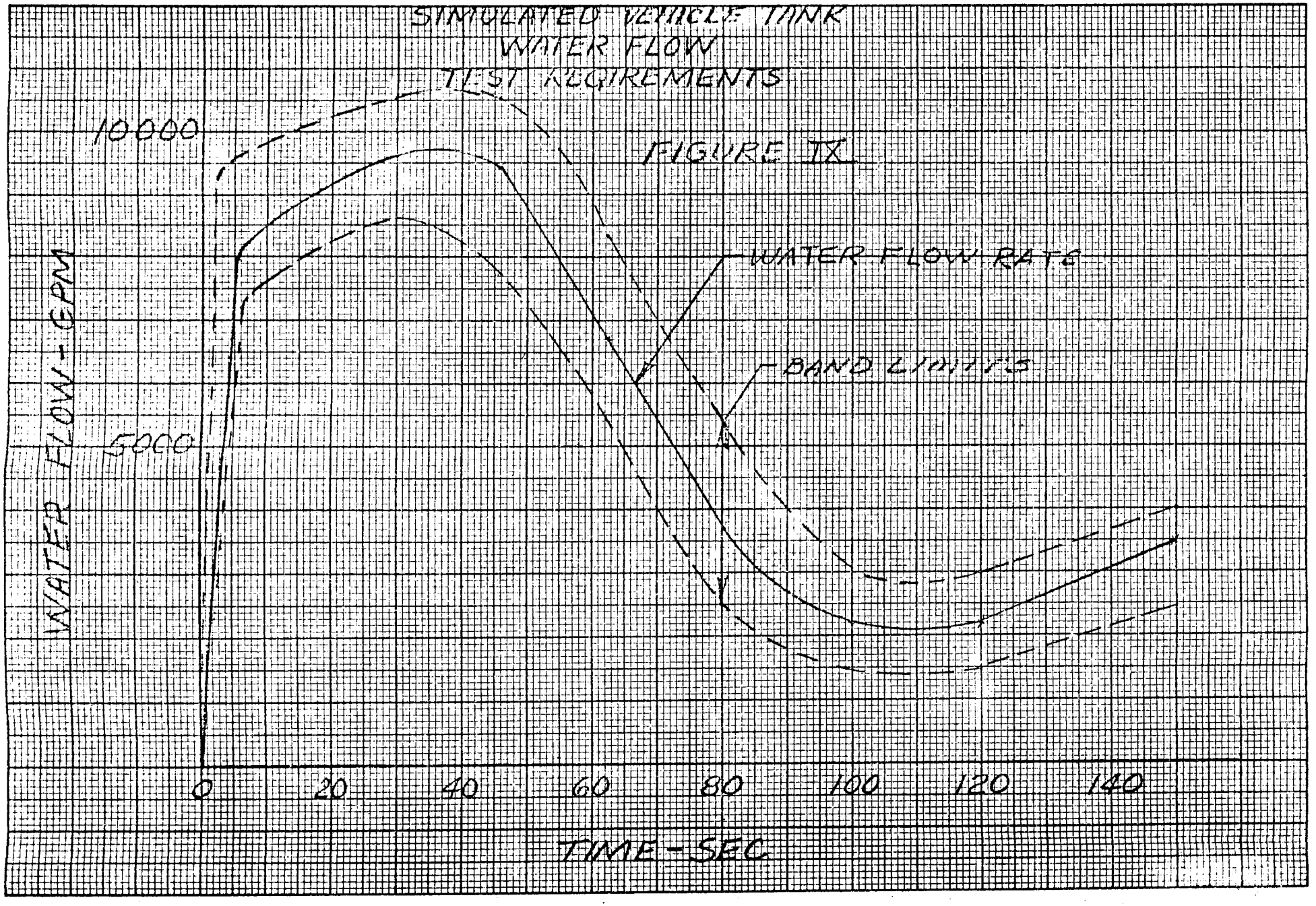

CONVAIR ASTRONAUTICS

REPORT
PAGE

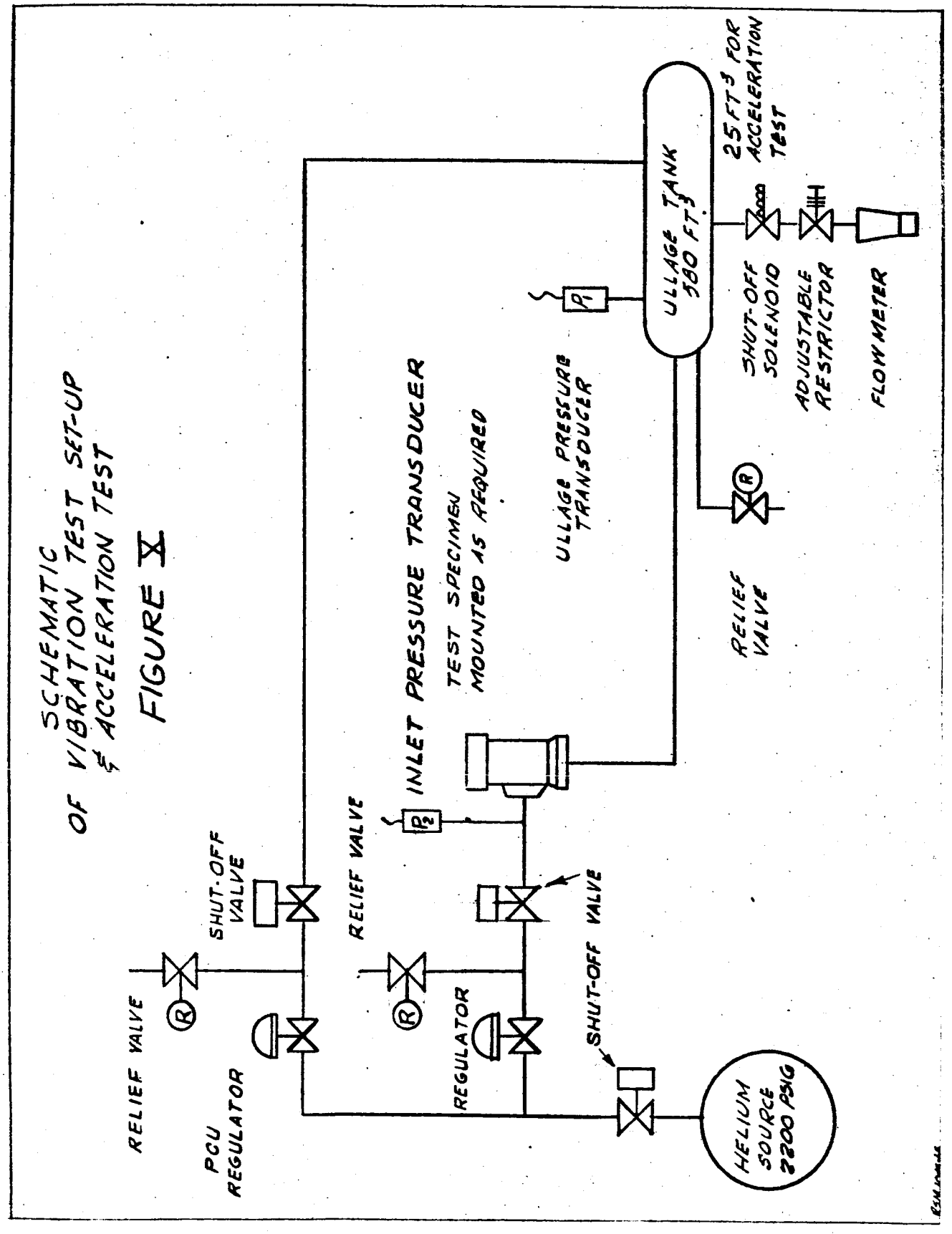

SCHEMATIC OF VIBRATION TEST SET-UP & ACCELERATION TEST

FIGURE X

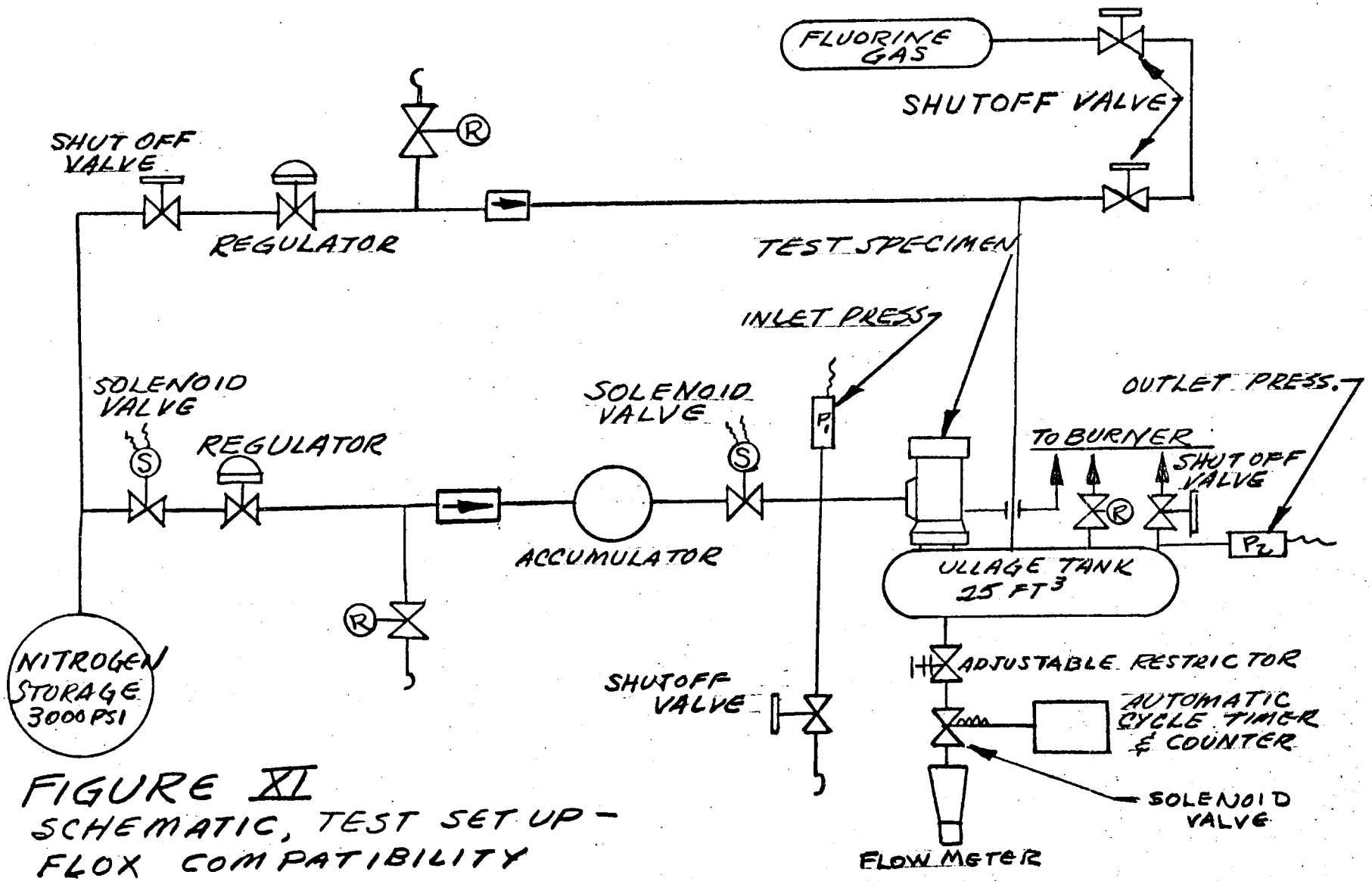

FIGURE XI
SCHEMATIC, TEST SET UP - FLOX COMPATIBILITY

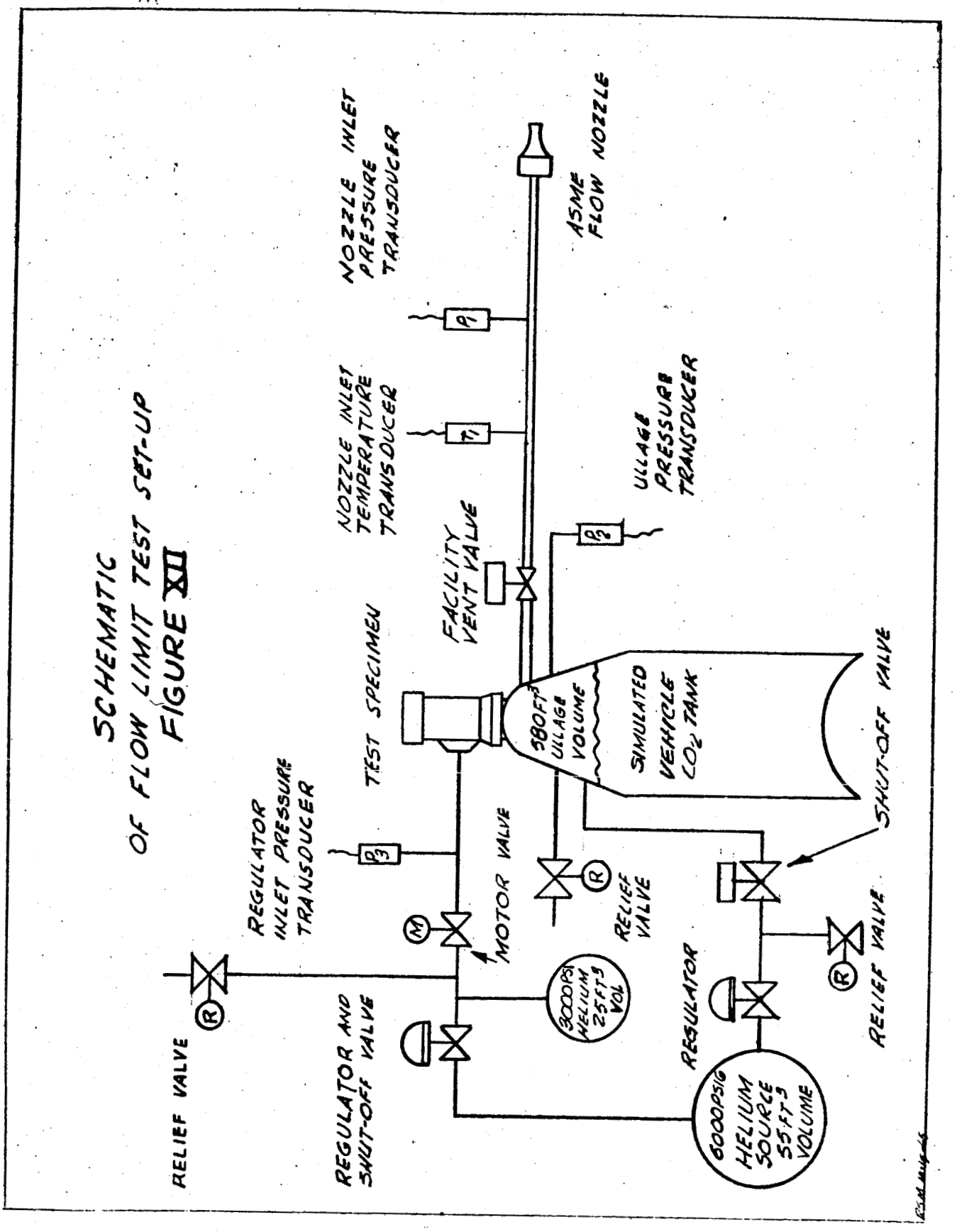

SCHEMATIC
OF FLOW LIMIT TEST SET-UP
FIGURE XII

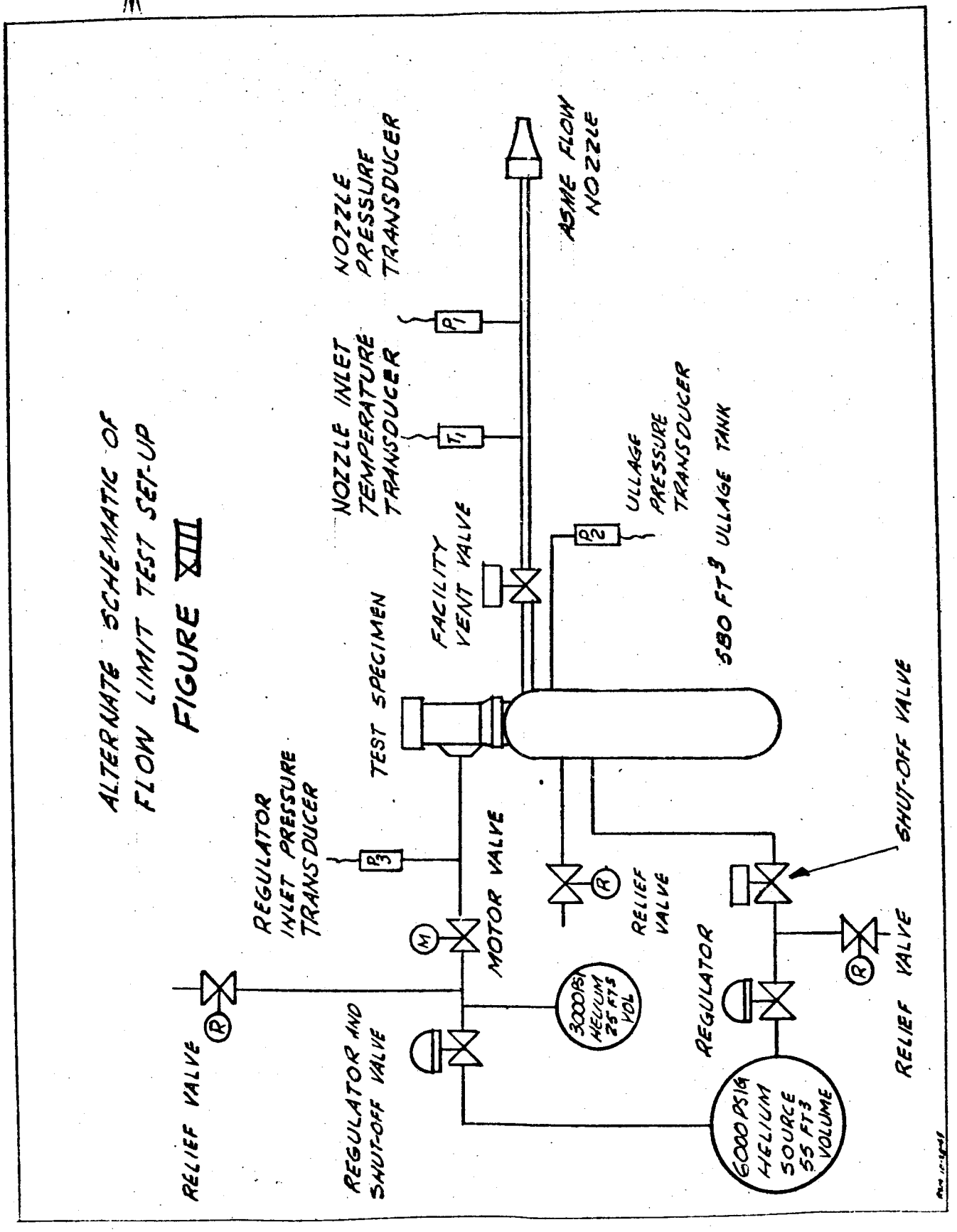

ALTERNATE SCHEMATIC OF FLOW LIMIT TEST SET-UP

FIGURE XIII

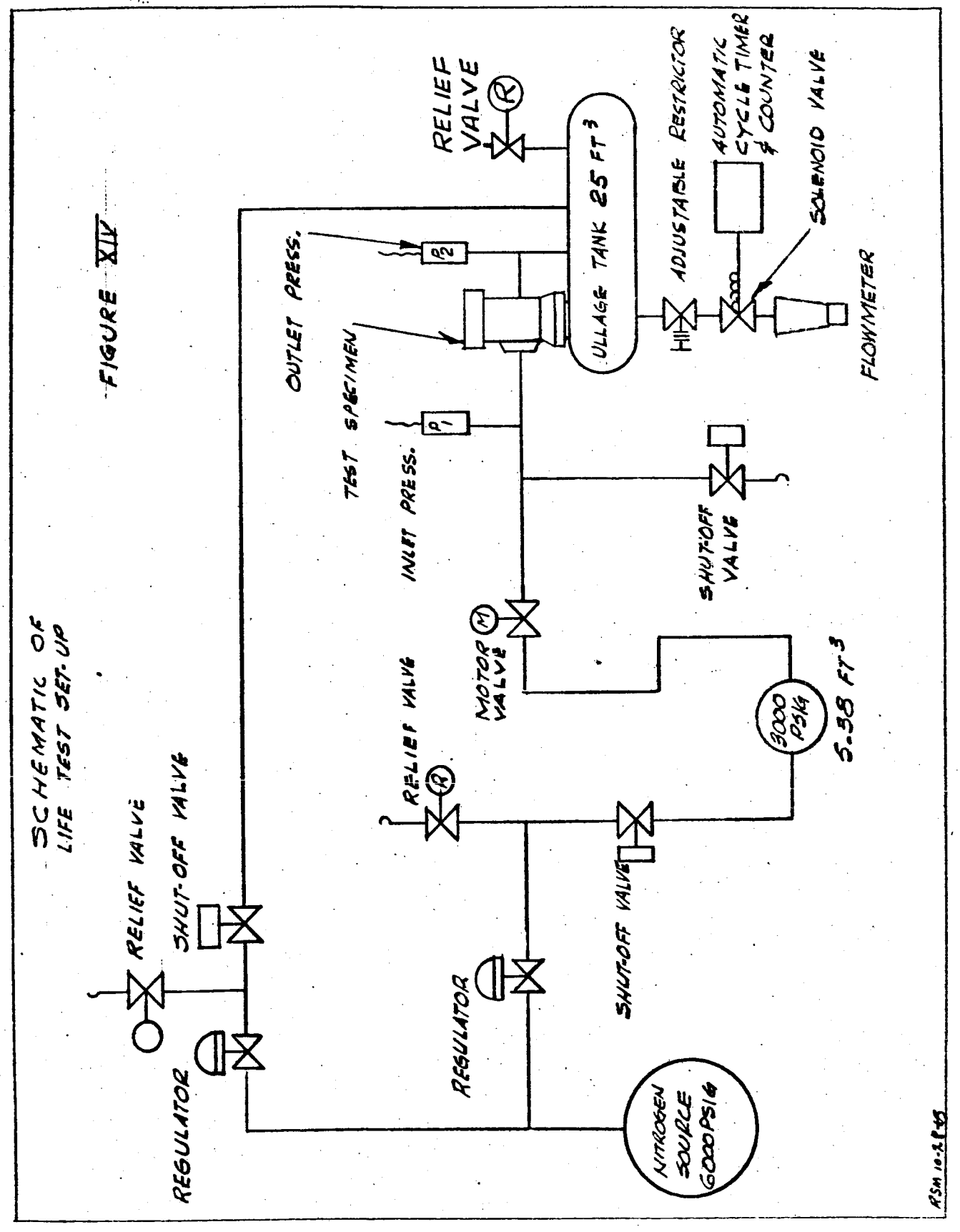

FIGURE XIV

SCHEMATIC OF LIFE TEST SET-UP

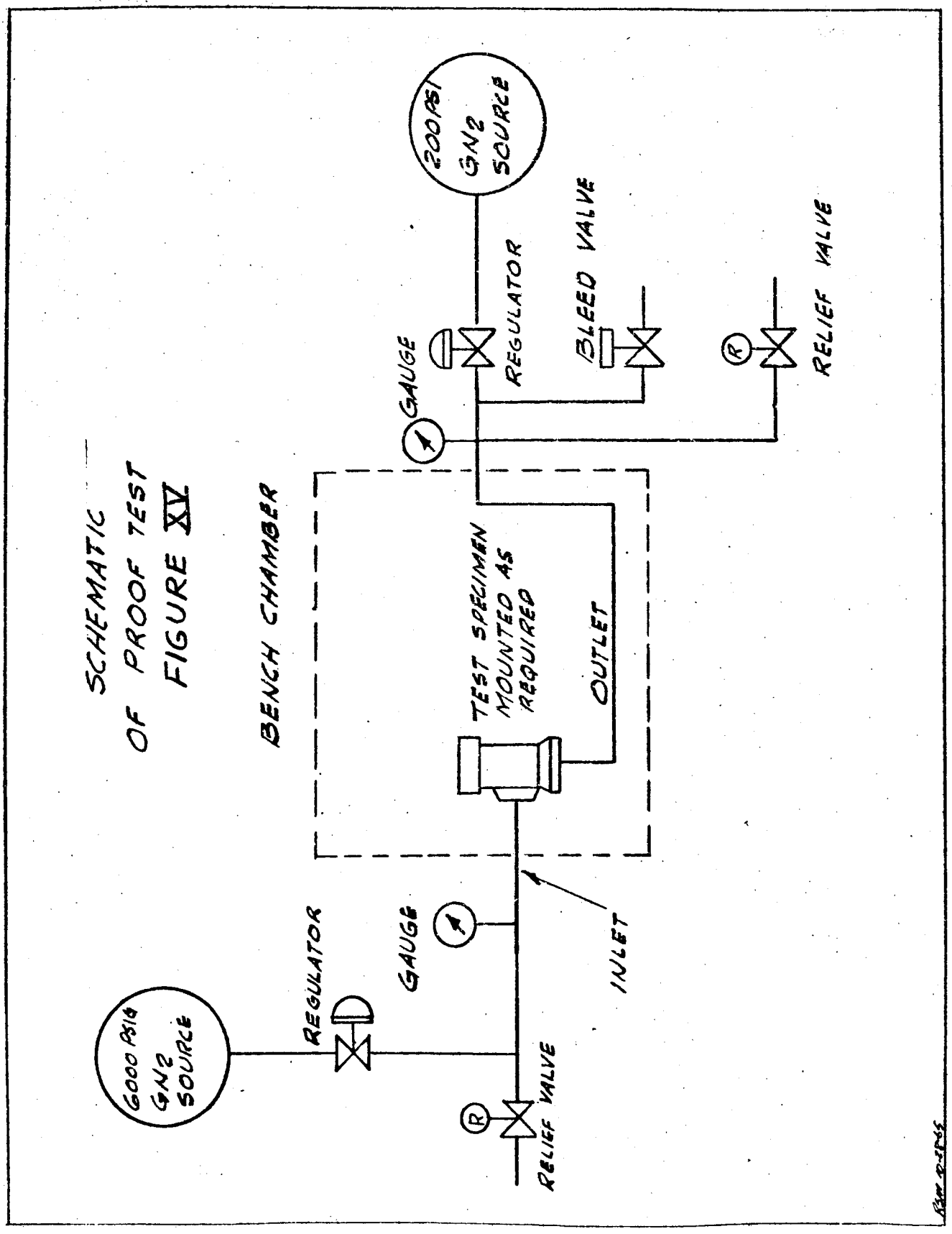

SCHEMATIC
OF PROOF TEST
FIGURE XV

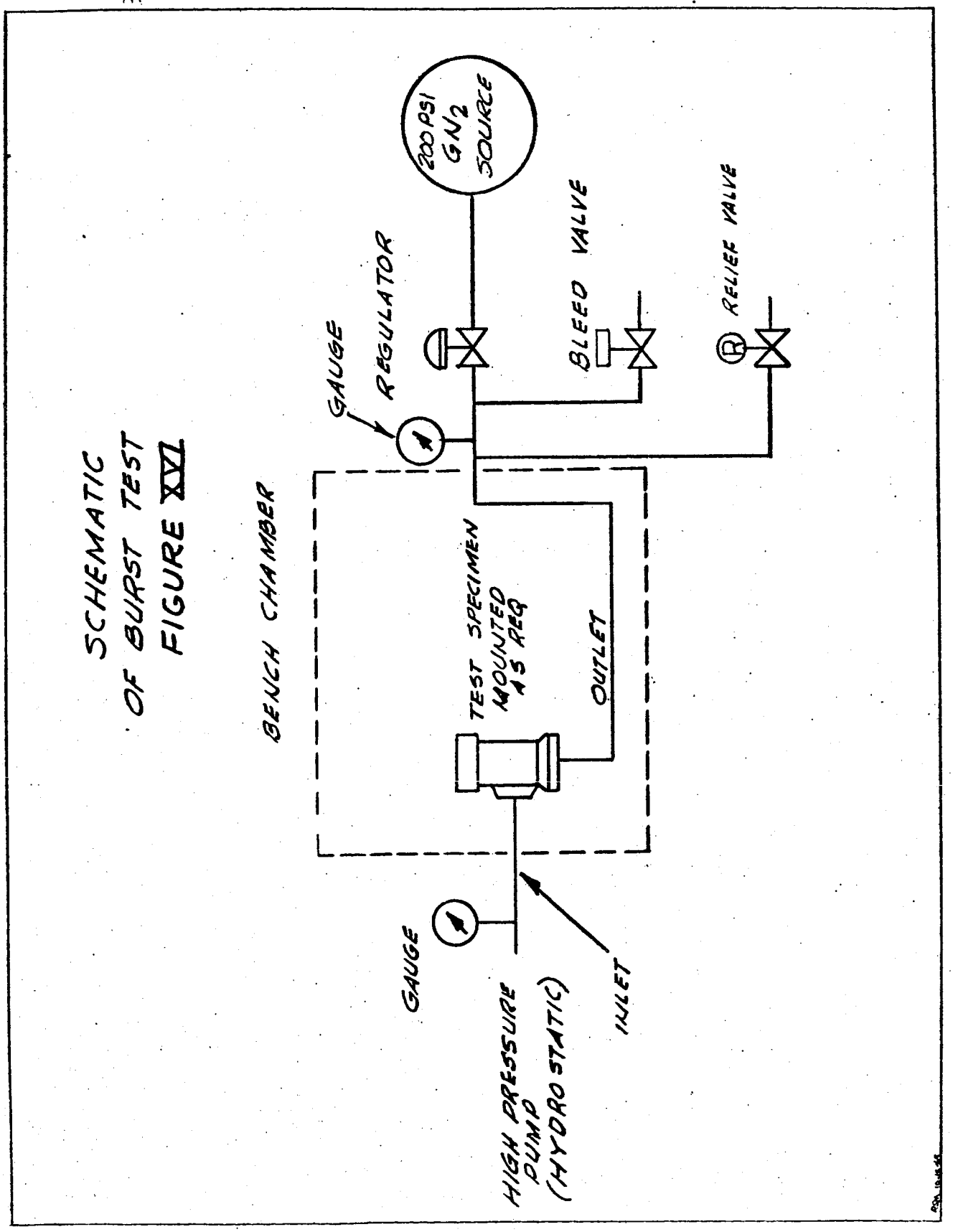

SCHEMATIC
OF BURST TEST
FIGURE XVI

GENERAL DYNAMICS

Convair Division