REPORT #637-66

RE-ORDER NO. 66-43

DRS

Addendum to

NASA CR 70936

Final Report
For
Design of Sealed Secondary
Silver Zinc Battery

Customer: JET PROPULSION LABORATORY
Contract No. 950 959

N66-20079 (ACCESSION NUMBER)
30 (PAGES)
CR 70936 (NASA CR OR TMX OR AD NUMBER)
(THRU)
1 (CODE)
03 (CATEGORY)
FACILITY FORM 602

GPO PRICE $ _____

CFSTI PRICE(S) $ _____

Hard copy (HC) 2.00

Microfiche (MF) .50

ff 653 July 65

Yardney Electric Corporation
"Pioneers In Compact Power"
New York, New York 10013

This work was performed for the Jet Propulsion Laboratory, California Institute of Technology, sponsored by the National Aeronautics and Space Administration under Contract NAS7-100.

JANUARY 1966

REPORT NO. 637-66
ADDENDUM TO
FINAL REPORT
JET PROPULSION LABORATORY

JAN
1966

1. INTRODUCTION

1.1 This addendum to the final report is in accordance with JPL's request dated 1 October 1965 (-) for additional information concerning the description of cells and testing of the batteries.

1.2 This report is divided into the following Sections:

A - Description of test cell designs.
B - Test cell data.
C - Battery test data for SN 2 and 3.
D - Overcharge test dates.

SECTION A - Test cell designs.

A.1 As indicated in YEC report NO. 570-65 three cell designs were evaluated for use in the final battery design. The description of these cells is as follows:

Parameter		Design #1	Design #2	Design #3
Cell Size		3-1/8wx6-3/8hx 1-3/16d	3-1/8wx6-3/8hx1-3/16d	2-5/16wx6-7/8h x 1-3/6 d
Number of Electrodes		6 (+) 7 (-)	4 (+) 5 (-)	4 (+) 5 (-)
Electrode Size		2 3/4" x 5"	2 3/4" x 4 3/16	1 15/16" x 5 3/4"
Active Material	Silver	162 gm	166 gm	149 gm
	Zinc Oxide	147 gm	136 gm	125 gm
Electrolyte (40% KOH + 80mg ZnO/ml)		100 cc	80 cc	65 cc
Separator		1 T Pellon (P-5) 4 T C-19	1 T Pellon (P-5) 4 T C-19	1 T Pellon (P-5) 4 T C-19

A.2 Design #1 with a modification was chosen for the final cell design. The modification consisted of decreasing the electrode height by 1/4" and the required amount of electrolyte by 11 cc's. This in turn descreased the mass of the active materials by 5%. This modification was required in order to meet the 610 gm max. cell weight requirement with a reasonable margin of safety. The parameters for the final cell design are as follows:

JAN
1966

Cell Size		3-1/8w x 6-3/8h x 1-3/16d
Number of electrodes		6(+) 7(-)
Electrode Size		2-3/4 x 4-3/4
Active Material	Silver	159 gm
	Zinc Oxide	140 gm
Electrolyte (40% KOH + 80mg ZnO/ml)		89 cc
Weight		575 gm

The detail drawings for the cell case and cover of the Final Report are attached to this report.

SECTION B - Test cell data.

B.1 Representative test data for above cell designs is attached to this report as Appendix #I.

SECTION C - Battery test data for SN 2 and SN 3.

C.1 Three batteries were tested during this program. The first two batteries SN 2 and 3 developed fissures in the potting during the 140°F portion of the test. The test was stopped at this point. The test data for these two batteries is attached as appendix No. II.

(The third battery, SN #1C fully met the requirements of the JPL specification. The data for that battery is presented in YEC report #570-65).

SECTION D - Test date for 15 day overcharge.

D.1 The 15 day battery overcharge (SN 1C) at 0.020 amperes was started on 8/2/65 and completed 8/21/65. Following are specific dates:

Room Temperature overcharge	8/2/65 to 8/7/65
+30°F overcharge	8/9/65 to 8/14/65
+140°F overcharge	8/16/65 to 8/21/65

During the period of 8/7 to 8/9, and 8/14 to 8/16 (weekends) the battery was on open circuit with no external circuitry

connected to battery

D.2 YEC report 570-65 lists the dates of 8/23/65 and 8/24/65 on the chart for the 15 day overcharge. These are the dates when the data was transcribed onto the chart and checked.

D.3 The battery was discharged on cycle #4 during the same day on which the 15 day overcharge terminated.

(1) JPL letter to YEC Att: R. Freeman - 10/1/65.

NO. 340R-L310 DIETZGEN GRAPH PAPER
SEMI-LOGARITHMIC
3 CYCLES X 10 DIVISIONS PER INCH

EUGENE DIETZGEN CO.
MADE IN U.S.A.

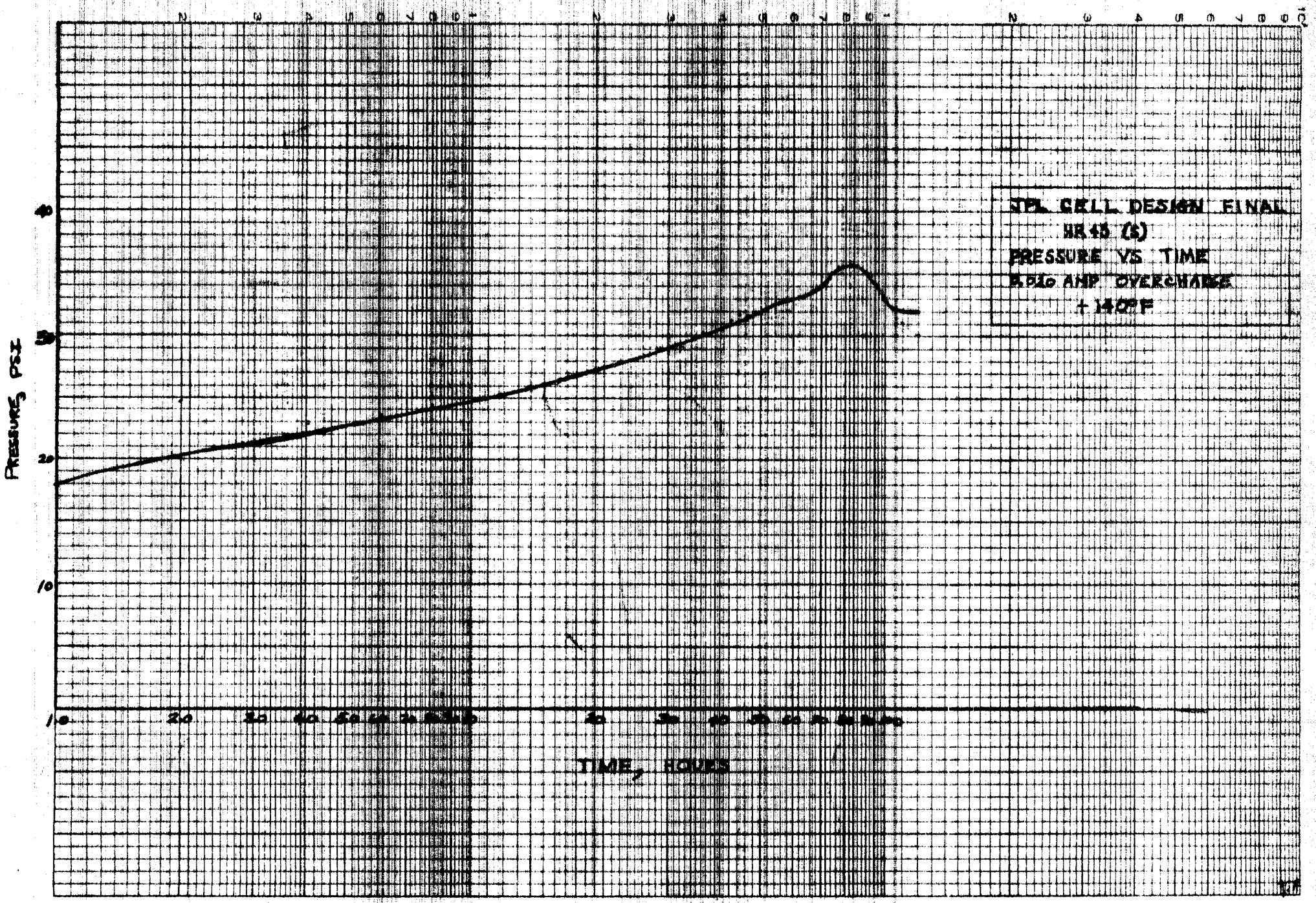

NO. 340R-L310 DIETZGEN GRAPH PAPER
SEMI-LOGARITHMIC
3 CYCLES X 10 DIVISIONS PER INCH

EUGENE DIETZGEN CO.
MADE IN U. S. A.

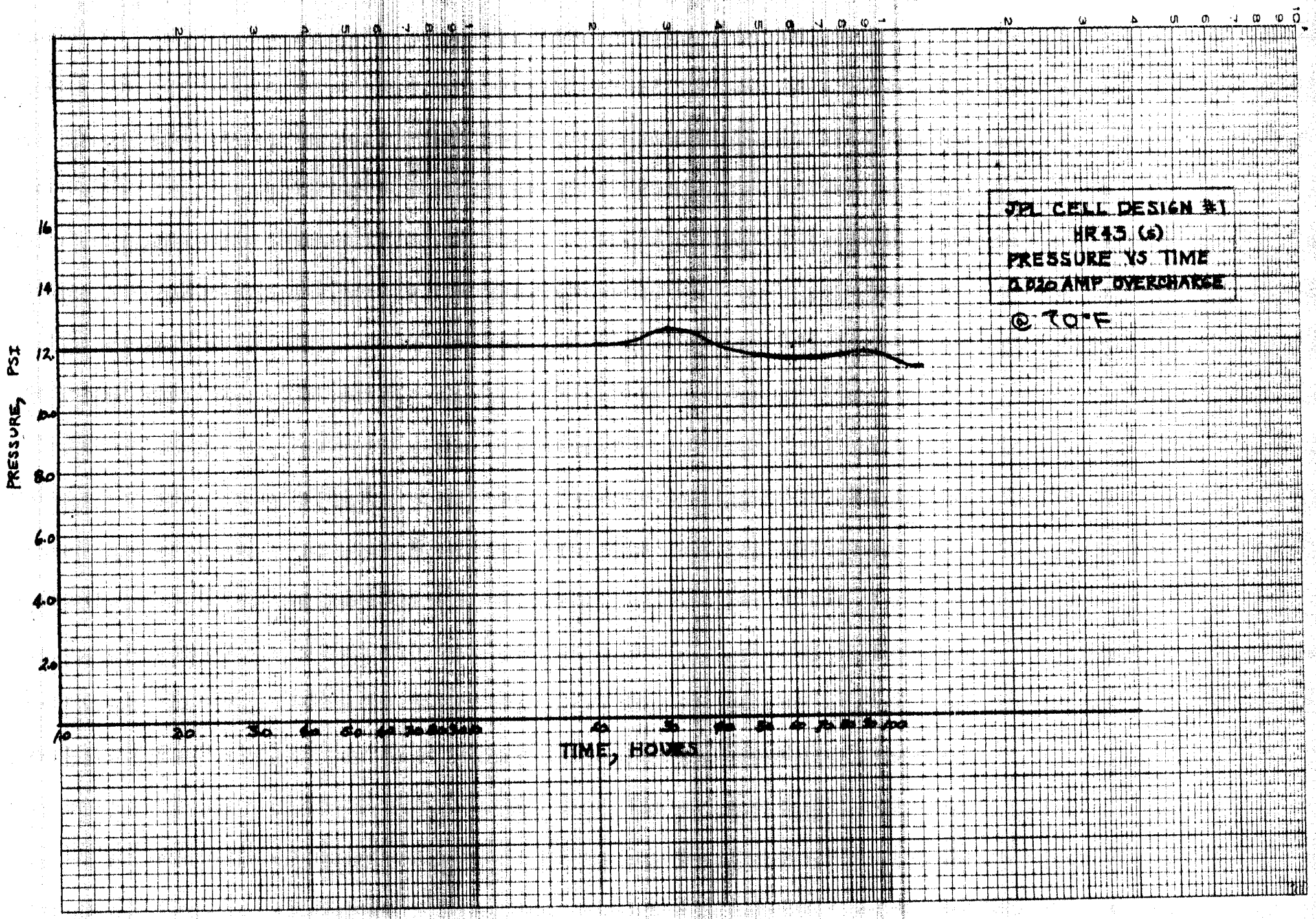

APPENDIX 11

YARDNEY ELECTRIC CORPORATION TEST DATA SHEET

Test Classification _____

Test Title JPL Qualification Test

Test Unit Type 18 x HR 43 (s) Test Unit No SN 2

Cycle Portion Charge Cycle No 1

Tester AF Witness AW Date 1-26-65

Test Conditions. Room Temperature

I (Amp.)	Time Clock	Time Test	Battery Voltage No	No	No	Cell no. No	No	Cell Voltage -End of Charge No	No	No	No	No
2.0	1200	0	29.0			1		1.96				
	1300	1	29.3			2		1.95				
	1400	2	29.4			3		1.96				
	1500	3	29.6			4		1.95				
	1600	4	29.6			5		1.95				
	1700	5	29.8			6		1.95				
	1800	6	33.71			7		1.95				
	1900	7	34.28			8		2.06				
	2000	8	34.29			9		1.95				
	2100	9	34.33			10		1.95				
	2300	11	34.5			11		1.95				
	0100	13	34.6			12		1.95				
	0300	15	34.6			13		1.95				
	0500	17	34.68			14		1.95				
	0600	18	34.75			15		1.95				
	0700	19	34.8			16		1.95				
	0800	20	34.8			17		1.95				
	0900	21	34.8			18		1.97				
	1000	22	34.8									
	1100	23	34.9									
	1200	24	34.9									
	1300	25	34.9									
	1400	26	34.9									
	1500	27	34.9									
	1600	28	35.0									
	1624	28.40	35.21									
Capacity (Ampere-Hours)			56.8	Ampere-hours								
Time to V4 (Volts)												

Notes:

YARDNEY ELECTRIC CORPORATION TEST DATA SHEET

Test Classification _____

Test Title JPL Qualification Test

Test Unit Type 18x HR43 (S) Test Unit No SN 2

Cycle Portion Discharge Cycle No 1

Tester L.F.V. Witness AW Date 1-27-65

Test Conditions: Room Temperature

I (Amp.)	Time Clock	Time Test	Battery Voltage No	No	No	Cell no.	Cell Voltage - End of discharge No	No	No	No	No	No	No
10.0	1815	0	31.12			1	1.41						
	1845	0.5	28.14			2	1.39						
	1915	1.0	27.46			3	1.36						
	1945	1.5	27.52			4	1.40						
	2015	2.0	27.54			5	1.35						
	2045	2.5	27.55			6	1.35						
	2115	3.0	27.52			7	1.38						
	2145	3.5	27.48			8	1.36						
	2215	4.0	27.42			9	1.41						
	2245	4.5	27.33			10	1.40						
	2315	5.0	27.14			11	1.30						
	2345	5.5	25.97			12	1.44						
	2356	5.68	24.61			13	1.43						
						14	1.41						
						15	1.40						
						16	1.41						
						17	1.44						
						18	1.00						
Capacity (Ampere-Hours)			56.8	Ampere-hrs									
Time to V_f (Volts)													

Notes:

YARDNEY ELECTRIC CORPORATION TEST DATA SHEET

Test Classification _____

Test Title JPL Qualification Test

Test Unit Type 18 x HR 43 (s) Test Unit No SN 2

Cycle Portion Charge Cycle No 2

Tester L. F. Jr. Witness AW Date 1-28-65

Test Conditions: Room Temperature

I (Amp.)	Time Clock	Time Test	Battery Voltage			Cell No.	Cell Voltage - End of Charge					
			Voltage									
			No	No	No	No	No	No	No	No	No	No
2.0	1045	0	29.1			1	1.97					
	1145	1	29.1			2	1.97					
	1245	2	29.1			3	1.98					
	1345	3	29.3			4	1.95					
	1445	4	29.4			5	1.95					
	1545	5	29.4			6	1.95					
	1645	6	30.5			7	1.95					
	1745	7	34.25			8	1.96					
	1845	8	34.20			9	1.96					
	1945	9	34.23			10	1.98					
	2045	10	34.32			11	1.96					
	2145	11	34.41			12	1.95					
	2245	12	34.47			13	2.04					
	0145	15	34.63			14	1.95					
	0345	17	34.62			15	1.95					
	0545	19	34.70			16	1.96					
	0745	21	34.81			17	1.95					
	0945	23	34.82			18	1.99					
	1045	24	34.84									
	1145	25	34.85									
	1245	26	34.87									
	1345	27	34.88									
	1445	28	34.9									
	1545	29	34.96									
	1600	29.25	35.09									
	1616	29.51	35.33									
Capacity (Ampere-Hours)			59.02 Ampere-hours									
Time to V4 (Volts)												

Notes:

YARDNEY ELECTRIC CORPORATION TEST DATA SHEET

Test Classification _____

Test Title JPL Qualification Test

Test Unit Type 18 x HR 43 (S) Test Unit No SN 2

Cycle Portion Discharge Cycle No 2

Tester L.F. Witness AW Date 1-30-65

Test Conditions. + 40°F

I (Amp.)	Time Clock	Time Test	Battery Voltage No	No	No	Cell No.	Cell Voltage - End of Discharge No	No	No	No	No	No	No
10.0	0930	0	33.48			1	1.44						
	1000	0.5	27.08			2	1.46						
	1030	1.0	27.11			3	1.46						
	1100	1.5	27.19			4	1.46						
	1130	2.0	27.2			5	1.46						
	1200	2.5	27.18			6	1.46						
	1230	3.0	27.15			7	1.46						
	1300	3.5	27.10			8	1.44						
	1330	4.0	26.99			9	1.00						
	1400	4.5	26.81			10	1.34						
	1430	5.0	26.41			11	1.44						
	1500*	5.46	25.8			12	1.46						
	*(1458)					13	1.46						
						14	1.46						
						15	1.46						
						16	1.46						
						17	1.46						
						18	1.42						
Capacity (Ampere-Hours)			54.6 Ampere-hrs										
Time to V4 (Volts)													

Notes:

YARDNEY ELECTRIC CORPORATION TEST DATA SHEET

Test Classification _____

Test Title JPL Qualification Test

Test Unit Type 18 x HR43 (S) Test Unit No SN 2

Cycle Portion Charge Cycle No 3

Tester L.F.J. Witness AW Date 1-31-65

Test Conditions: Room Temperature

I (Amp.)	Time Clock	Time Test	Battery Voltage No	No	No	Cell no.	Cell Voltage - End of charge No	No	No	No	No	No
2.0	0900	0	29.41			1	1.97					
	1000	1	29.39			2	1.97					
	1100	2	29.39			3	1.96					
	1200	3	29.4			4	1.95					
	1300	4	29.42			5	1.94					
	1400	5	29.75			6	1.95					
	1500	6	33.1			7	1.95					
	1600	7	34.2			8	1.96					
	1700	8	34.14			9	1.97					
	1800	9	34.15			10	2.06					
	1900	10	34.24			11	1.95					
	2100	12	34.4			12	1.94					
	2300	14	34.61			13	2.01					
	0100	16	34.68			14	1.94					
	0300	18	34.77			15	1.95					
	0500	20	34.83			16	1.98					
	0700	22	34.89			17	1.94					
	0800	23	34.87			18	2.07					
	0900	24	34.9									
	1000	25	34.89									
	1100	26	34.96									
	1200	27	35.0									
	1235	27.58	35.46									
Capacity (Ampere-Hours)			55.16 Ampere-hrs									
Time to V4 (Volts)												

Notes:

YARDNEY ELECTRIC CORPORATION TEST DATA SHEET

Test Classification _____

Test Title JPL Qualification Test

Test Unit Type 18x HR 43(s) Test Unit No SN2

Cycle Portion Discharge Cycle No 3

Tester L.F. Witness AW Date 2-1-65

Test Conditions: + 140°F

I (Amp.)	Time Clock	Time Test	Battery Voltage			Cell No.	Cell Voltage - End of discharge					
			Voltage									
			No	No	No	No	No	No	No	No	No	No
10.0A	1530	0	33.49			1	1.43					
	1600	0.5	28.63			2	1.44					
	1630	1.0	27.69			3	-1.20					
	1700	1.5	27.75			4	1.44					
	1730	2.0	27.76			5	1.44					
	1800	2.5	27.75			6	1.41					
	1830	3.0	27.73			7	1.42					
	1900	3.5	27.69			8	1.41					
	1930	4.0	27.63			9	1.45					
	2000	4.5	27.56			10	1.45					
	2030	5.0	27.47			11	1.42					
	2100	5.5	27.24			12	1.39					
	2129	5.98	24.1			13	1.45					
						14	1.42					
						15	1.45					
						16	1.44					
						17	1.43					
						18	1.43					
Capacity (Ampere-Hours)			59.8 Ampere-hrs									
Time to V_f (Volts)												

Notes: 1- Cell no. 1 is Battery Positive
2- Cell no. 3 was found to have a negative voltage at 2129 hrs

YARDNEY ELECTRIC CORPORATION TEST DATA SHEET

Test Classification _____

Test Title JPL Qualification Test

Test Unit Type 18 × HR 43(s) Test Unit No SN 3

Cycle Portion Charge Cycle No 1

Tester LFJ Witness AW Date 4-13-65

Test Conditions: Room Temperature

I (Amp.)	Time Clock	Time Test	Battery Voltage			Cell No.	Cell Voltage - End of Charge					
			Voltage									
			No	No	No	No	No	No	No	No	No	No
2.0A	1000	0	28.8			1	1.95					
	1100	1	29.0			2	1.95					
	1200	2	29.35			3	1.95					
	1300	3	29.41			4	1.95					
	1400	4	29.46			5	1.95					
	1500	5	29.46			6	1.95					
	1600	6	29.53			7	1.95					
	1700	7	31.30			8	1.95					
	1800	8	34.29			9	1.95					
	1900	9	34.27			10	1.95					
	2000	10	34.32			11	1.95					
	2100	11	34.39			12	2.00					
	2300	13	34.58			13	1.95					
	0100	15	34.68			14	1.95					
	0300	17	34.60			15	1.95					
	0500	19	34.70			16	1.95					
	0600	20	34.80			17	1.95					
	0800	22	34.80			18	1.95					
	0900	23	34.90									
	1000	24	34.90									
	1100	25	34.94									
	1200	26	34.96									
	1300	27	35.0									
	1400	28	35.04									
	1458	28.966	35.12									
	1500	29.0	35.14									
Capacity (Ampere-Hours)			58.0 Ampere-hrs									
Time to ¼ (Volts)												

Notes:

YARDNEY ELECTRIC CORPORATION TEST DATA SHEET

Test Classification _____

Test Title JPL Qualification Test

Test Unit Type 18x HR43(s) Test Unit No SN 3

Cycle Portion Discharge Cycle No 1

Tester L.F. Witness AW Date 4-14-65

Test Conditions: Room Temperature

I (Amp.)	Time Clock	Time Test	Battery Voltage No	No	No	Cell No.	Cell Voltage - End of Discharge No	No	No	No	No	No	No
10.0A	1645	0	31.84			1	1.40						
	1715	0.5	27.82			2	1.45						
	1745	1.0	27.49			3	1.45						
	1815	1.5	27.52			4	1.44						
	1845	2.0	27.54			5	1.45						
	1915	2.5	27.52			6	1.44						
	1945	3.0	27.51			7	1.44						
	2015	3.5	27.48			8	1.44						
	2045	4.0	27.43			9	1.44						
	2115	4.5	27.33			10	1.43						
	2145	5.0	27.15			11	1.44						
	2215	5.5	26.14			12	1.44						
	2220	5.63	25.80			13	1.44						
						14	1.44						
						15	1.44						
						16	1.45						
						17	1.45						
						18	1.40						
Capacity (Ampere-Hours)			56.3	Ampere-hrs									
Time to V (Volts)													

Notes:

YARDNEY ELECTRIC CORPORATION TEST DATA SHEET

Test Classification _____

Test Title JPL Qualification Test

Test Unit Type 18 x HR43 (S) Test Unit No SN 3

Cycle Portion Charge Cycle No 2

Tester L.F.G. Witness AW Date 4-14-65

Test Conditions: Room Temperature

I (Amp.)	Time Clock	Time Test	Battery Voltage No	No	No	Cell no. No	Cell Voltage - End of Charge No	No	No	No	No	No
2.0A	2400	0	28.95			1	1.94					
	0100	1	29.06			2	1.94					
	0200	2	29.18			3	1.95					
	0300	3	29.34			4	1.95					
	0400	4	29.39			5	1.94					
	0500	5	29.43			6	1.94					
	0600	6	29.66			7	1.94					
	0700	7	34.24			8	1.94					
	0900	9	34.28			9	2.00					
	1100	11	34.52			10	1.94					
	1300	13	34.62			11	1.94					
	1500	15	34.65			12	1.98					
	1600	16	34.67			13	1.95					
	1700	17	34.74			14	1.94					
	1800	18	34.79			15	1.98					
	1900	19	34.80			16	1.95					
	2000	20	34.84			17	1.94					
	2100	21	34.86			18	1.98					
	2200	22	34.89									
	2300	23	34.96									
	2400	24	34.93									
	0100	25	34.92									
	0200	26	34.94									
	0300	27	34.97									
	0400	28	35.0									
	0500	29	35.16									
	0512	29.20	35.20									
Capacity (Ampere-Hours)			58.4 Ampere-hrs									
Time to V4 (. Volts)												

Notes:

YARDNEY ELECTRIC CORPORATION TEST DATA SHEET

Test Classification _____

Test Title JPL Qualification Test

Test Unit Type 18 x HR43 (s) Test Unit No SN 3

Cycle Portion Discharge Cycle No 2

Tester L.F.J. Witness AW Date 4-16-65

Test Conditions: + 40° F

I (Amp.)	Time Clock	Time Test	Battery Voltage No	No	No	Cell No.	Cell Voltage End of discharge No	No	No	No	No	No
10.0A	1115	0	30.05			1	1.43					
	1145	0.5	27.29			2	1.46					
	1215	1.0	27.03			3	1.46					
	1245	1.5	27.12			4	1.46					
	1315	2.0	27.12			5	1.46					
	1345	2.5	27.10			6	1.46					
	1415	3.0	27.06			7	1.46					
	1445	3.5	26.97			8	1.44					
	1515	4.0	26.84			9	1.38					
	1545	4.5	26.60			10	1.35					
	1615	5.0	26.18			11	1.44					
	1625	5.16	25.96			12	1.46					
						13	1.46					
						14	1.46					
						15	1.46					
						16	1.45					
						17	1.45					
						18	1.42					
Capacity (Ampere-Hours)			51.6 Ampere-hrs.									
Time to V4 (Volts)												

Notes:

YARDNEY ELECTRIC CORPORATION TEST DATA SHEET

Test Classification _____

Test Title JPL Qualification Test

Test Unit Type 18 x HR 43 (S) Test Unit No SN 3

Cycle Portion Charge Cycle No 3

Tester A.F. Witness AW Date 4-16-65

Test Conditions: Room Temperature

I (Amp.)	Time Clock	Time Test	Battery Voltage No	No	No	Cell No. No	Cell Voltage End of Charge No	No	No	No	No	No
2.0A	2400	0	29.17			1	1.93					
	0100	1	29.14			2	1.93					
	0200	2	29.20			3	1.93					
	0300	3	29.30			4	1.92					
	0400	4	29.36			5	1.92					
	0500	5	29.40			6	1.93					
	0600	6	29.47			7	1.93					
	0700	7	32.88			8	1.92					
	0800	8	34.26			9	2.00					
	0900	9	34.30			10	1.93					
	1000	10	34.40			11	1.95					
	1100	11	34.50			12	1.95					
	1200	12	34.64			13	1.92					
	1300	13	34.73			14	1.92					
	1500	15	34.71			15	1.94					
	1700	17	34.84			16	1.93					
	1900	19	34.90			17	1.94					
	2000	20	34.92			18	1.95					
	2100	21	34.92									
	2200	22	34.93									
	2300	23	34.96									
	2400	24	34.98									
	0100	25	35.00									
	0200	26	34.91									
	0215	26.25	34.92									
Capacity (Ampere-Hours)			52.5	Ampere-hrs								
Time to V_f (Volts)												

Notes:

YARDNEY ELECTRIC CORPORATION TEST DATA SHEET

Test Classification _____

Test Title JPL Qualification Test

Test Unit Type 18x HR43 (S) Test Unit No SN 3

Cycle Portion Discharge Cycle No 3

Tester L. F. Gr. Witness AW Date 4-19-65

Test Conditions: + 140°F

I (Amp.)	Time Clock	Time Test	Battery Voltage No	No	No	Cell No	Cell Voltage - End of discharge No	No	No	No	No	No	No
10.0A	0915	0	31.38			1	1.49						
	0945	0.5	28.40			2	1.52						
	1015	1.0	27.69			3	1.52						
	1045	1.5	27.70			4	1.52						
	1115	2.0	27.69			5	1.52						
	1145	2.5	27.66			6	1.52						
	1215	3.0	27.66			7	1.52						
	1245	3.5	27.61			8	1.52						
	1315	4.0	27.54			9	1.51						
	1345	4.5	27.42			10	1.52						
	1415	5.0	27.04			11	1.52						
	1428	5.21	26.96			12	1.45						
						13	1.47						
						14	1.52						
						15	1.52						
						16	1.52						
						17	1.35						
						18	1.44						
Capacity (Ampere-Hours)			52.1 Ampere-hrs										
Time to V_f (Volts)													

Notes:

YARDNEY ELECTRIC CORPORATION TEST DATA SHEET

Test Classification _____

Test Title JPL Qualification Test

Test Unit Type 18 x HR 43 (s) Test Unit No SN 3

Cycle Portion Charge Cycle No 4

Tester L.F. Witness AW Date 4-21-65

Test Conditions: Room Temperature

I (Amp.)	Time Clock	Time Test	Battery Voltage			Cell No.	Cell Voltage @ 0448 hr	Break in Charge	Cell No.	Cell Voltage @ 1030		
			Voltage									
			No	No	No	No	No	No	No	No	No	No
2.0A	1600	0	29.37			1	1.93		1	1.93		
	1700	1	29.46			2	1.93		2	1.93		
	1800	2	29.84			3	1.93		3	1.92		
	1900	3	33.88			4	1.93		4	1.92		
	2000	4	34.29			5	1.92		5	1.93		
	2100	5	34.36			6	1.92		6	1.93		
	2200	6	34.46			7	1.92		7	1.92		
	2300	7	34.60			8	1.93		8	1.92		
	2400	8	34.68			9	1.93		9	1.92		
	0100	9	34.68			10	1.93		10	1.92		
	0200	10	34.68			11	1.93		11	1.92		
	0300	11	34.69			12	1.93		12	1.92		
	0400	12	34.74			13	1.93		13	2.00		
	0448	12.80	34.85			14	2.00		14	1.93		
	Break in	Charge				15	1.92		15	1.92		
	Cell #14 to 2.00 V.					16	1.93		16	1.92		
	0930	0				17	1.93		17	1.94		
	0945	0.15				18	1.96		18	1.97		
	1000	0.30										
	1015	0.45										
	1030	1.00										
		~										
Capacity - 1st Charge			25.60	Ampere-hrs								
Capacity - 2nd Charge			2.00									
Capacity (Ampere-Hours)			27.60	Ampere-hrs								
Time to V (Volts)												

Notes: 1. - Cell no. 1 is Battery positive.

2. - Charge stopped at 0448 hrs as cell no. 14 rose to 2.00 Volts

These drawings and specifications are the property of Yardney Electric Corp. and shall not be reproduced, copied, used, or disclosed to any third party without prior written consent of Yardney Electric Corp.

APPLICATION		REVISIONS			
NEXT ASSY	USED ON	SYM	DESCRIPTION	DATE	APPROVAL

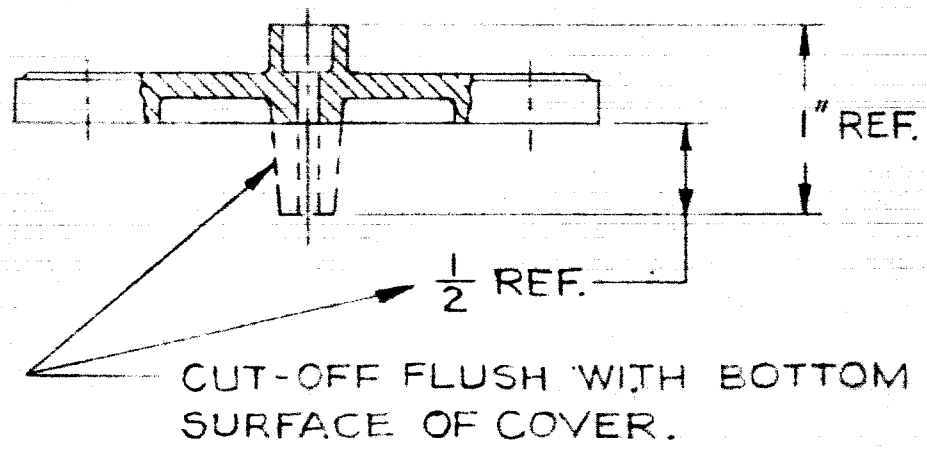

NOTES:

1. USE PART NO. 7302 AND MODIFY AS SHOWN.
2. MFG. STDS. PER YP-197.

UNLESS OTHERWISE SPECIFIED DIMENSIONS ARE IN INCHES TOLERANCES ON: FRACTIONS ± DECIMALS X ± XX ± XXX ± ANGLES ±	DRAWN BY E. ZIEDINS	DATE 11-11-64	TITLE COVER – 23 AH MODIFIED	YARDNEY ELECTRIC CORP. NEW YORK 13, N.Y.
	CHECKED BY	DATE 11-12-64		
	PROJ ENGR	DATE 11/13/64		
MATL	APPROVED BY QA	DATE 11/18/64		
FINISH		11/12/64	SCALE 1/1	DWG. No. 8981 REV.
			WT CALC ACT	

These drawings and specifications are the property of Yardney Electric Corp. and shall not be reproduced, copied, used, or disclosed to any third party without prior authorization of Yardney Electric Corp.

FOLD OUT A
CUTOUT 1

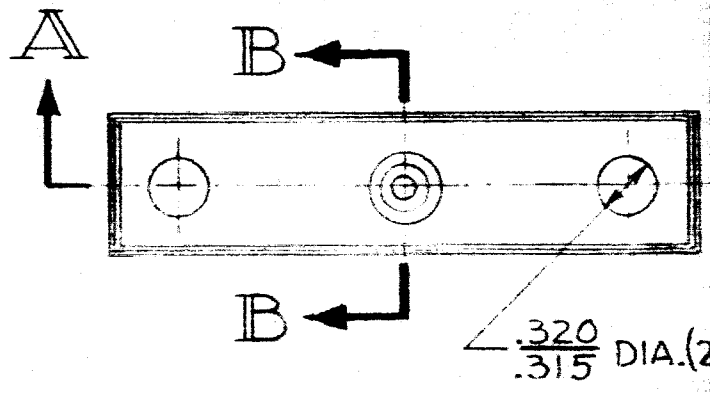

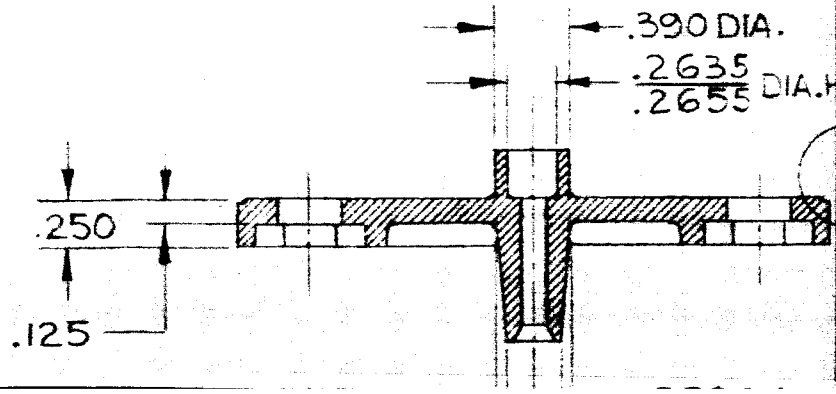

A 2

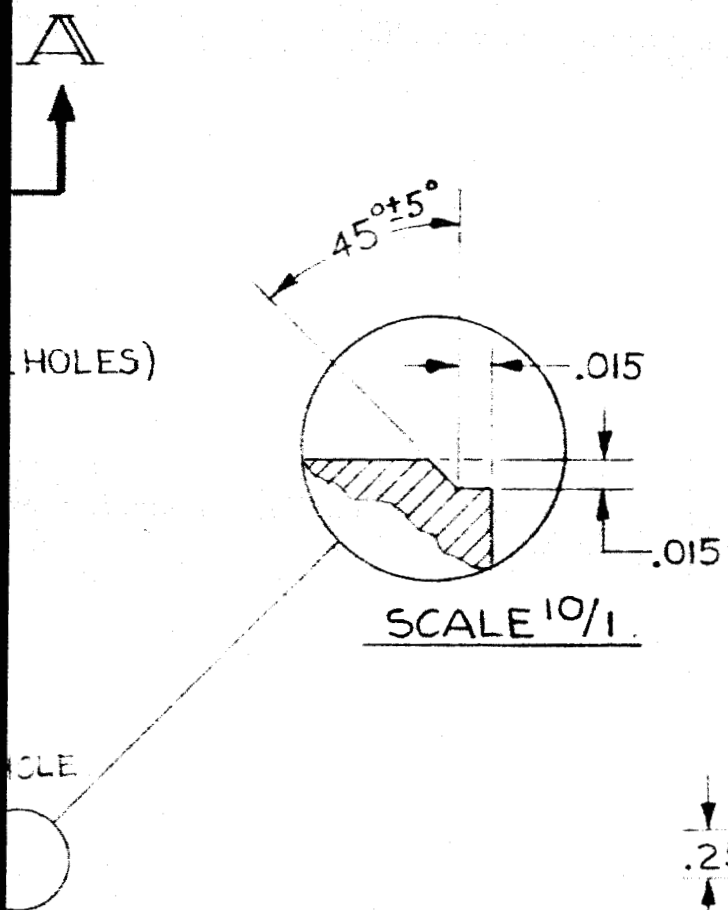
A
45°±5°
HOLES)
.015
.015
SCALE 10/1
OLE

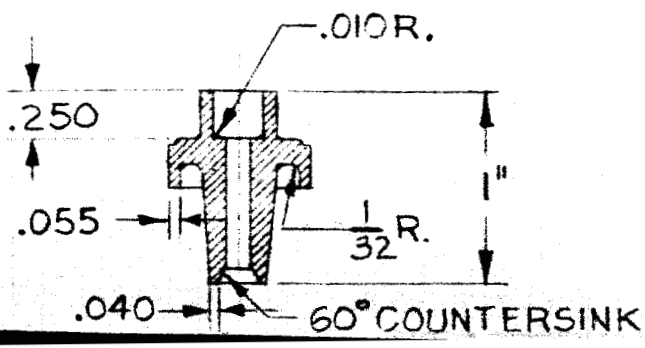
.010 R.
.250
1"
.055
1/32 R.
.040
60° COUNTERSINK

REVISIONS			
SYM	DESCRIPTION	DATE	APPROVAL

A3

NOTES:

1. MATERIAL: RMD-4511 (C-11)
2. COVER SHALL FIT CELL CASE DWG.#7301 WITH .005 OVERALL CLEARANCE.

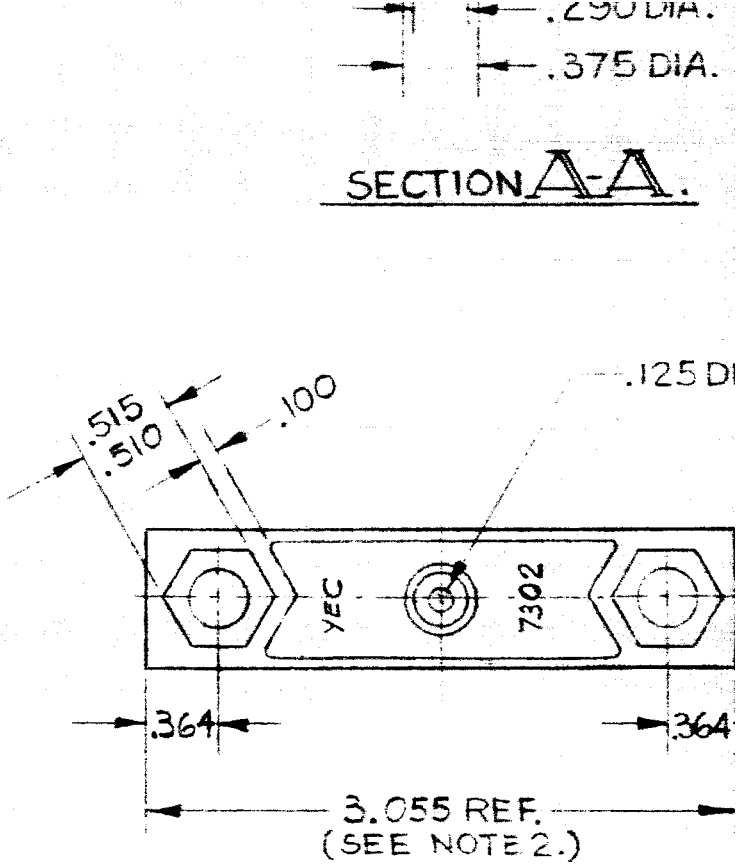
.290 DIA.
.375 DIA.
SECTION A-A.
.125 DI
.515
.510
.100
YEC
7302
.364
.364
3.055 REF.
(SEE NOTE 2.)

A-4

SECTION B-B.

A.

.363

.727 REF. SEE NOTE 2.

REQD

UNLESS OTHERWISE SPECIFIED		
DIMENSIONS ARE IN INCHES		
TOLERANCES ON FRACTIONS	DECIMALS	ANGLES
$\pm \frac{1}{64}$	.X ± .XX ± .XXX ± .005	$\pm \frac{1}{2}^{\circ}$
MATL NOTED		
FINISH		

DRAWN BY EZIEDI

CHECKED BY G. C.

PROJECT ENGR

APPROVED BY LK EP.

A5

NEXT ASSY	USED ON	NEXT ASSY	FINAL ASSY
APPLICATION		QTY REQD	

A 6

PART NO.	DESCRIPTION	MATL	MATL SPEC	UNIT WT

LIST OF MATERIAL

NS	DATE 5.12.60
	DATE 5-13-60
	DATE 5-17-60
	DATE
	5. 18. 60
MC	5-19-60

COVER, CELL
23 AH.

YARDNEY ELECTRIC CORP.
NEW YORK 13, N.Y.

DWG NO. 7302

REV.

SCALE 1/1

WT CALC ACT

SHEET OF

These drawings and specifications are the property of Yardney Electric Corp. and shall not be reproduced, copied, used, or disclosed to any third party without prior authorization of Yardney Electric Corp.

FOLDOUT B
CUTOUT 1

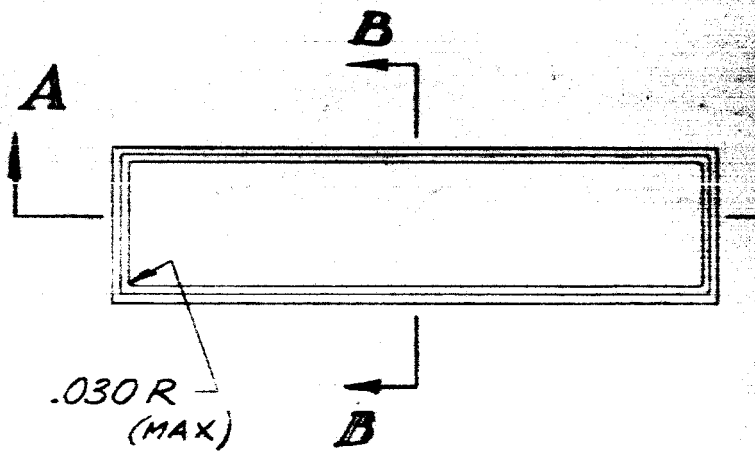

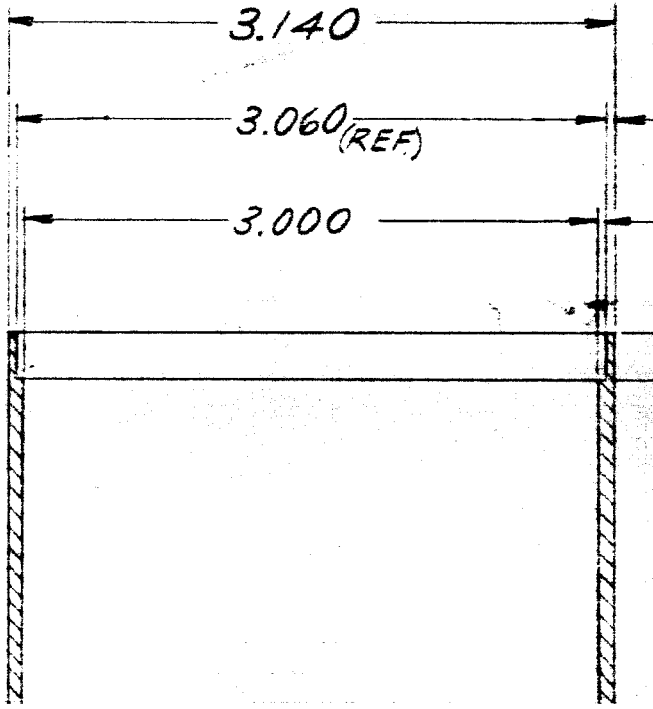

B2

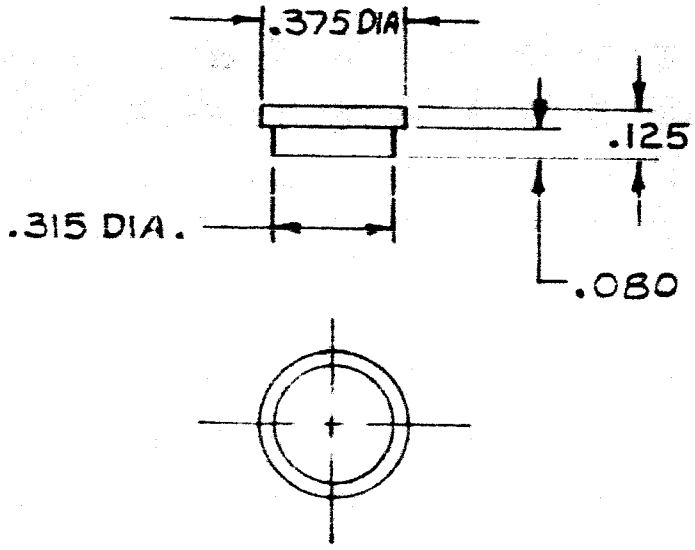

A1

PLUG
(PRESS FITTED TO BOTTOM HOLE)
SCALE: 2:1

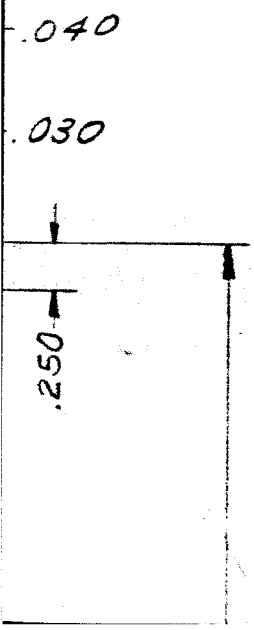

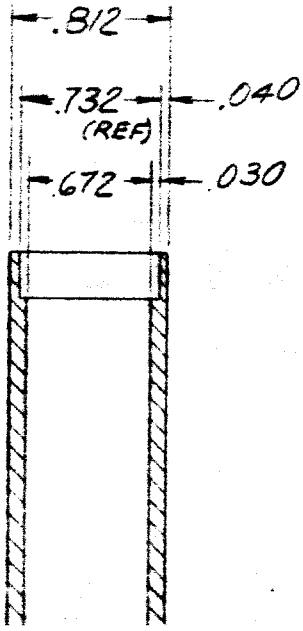

REVISIONS				
SYM	DESCRIPTION		DATE	APPROVAL
A	(1-2) SEE ECN - 2211	AK	11-30-64	

B3

NOTES:

1. FOR CELL COVER SEE DWG. NO. 7302.
2. MFG. STDS. PER YP-197.
3. CEMENTING OF THE BOTTOM PLUG:
   THE CEMENTING SURFACES OF THE BOTTOM HOLE SHALL BE THOROUGHLY WETTED WITH C-11 CEMENT AND BOTTOM PLUG MUST BE INSERTED INTO POSITION THROUGH THE INTERIOR OF THE CELL CASE.

A_2

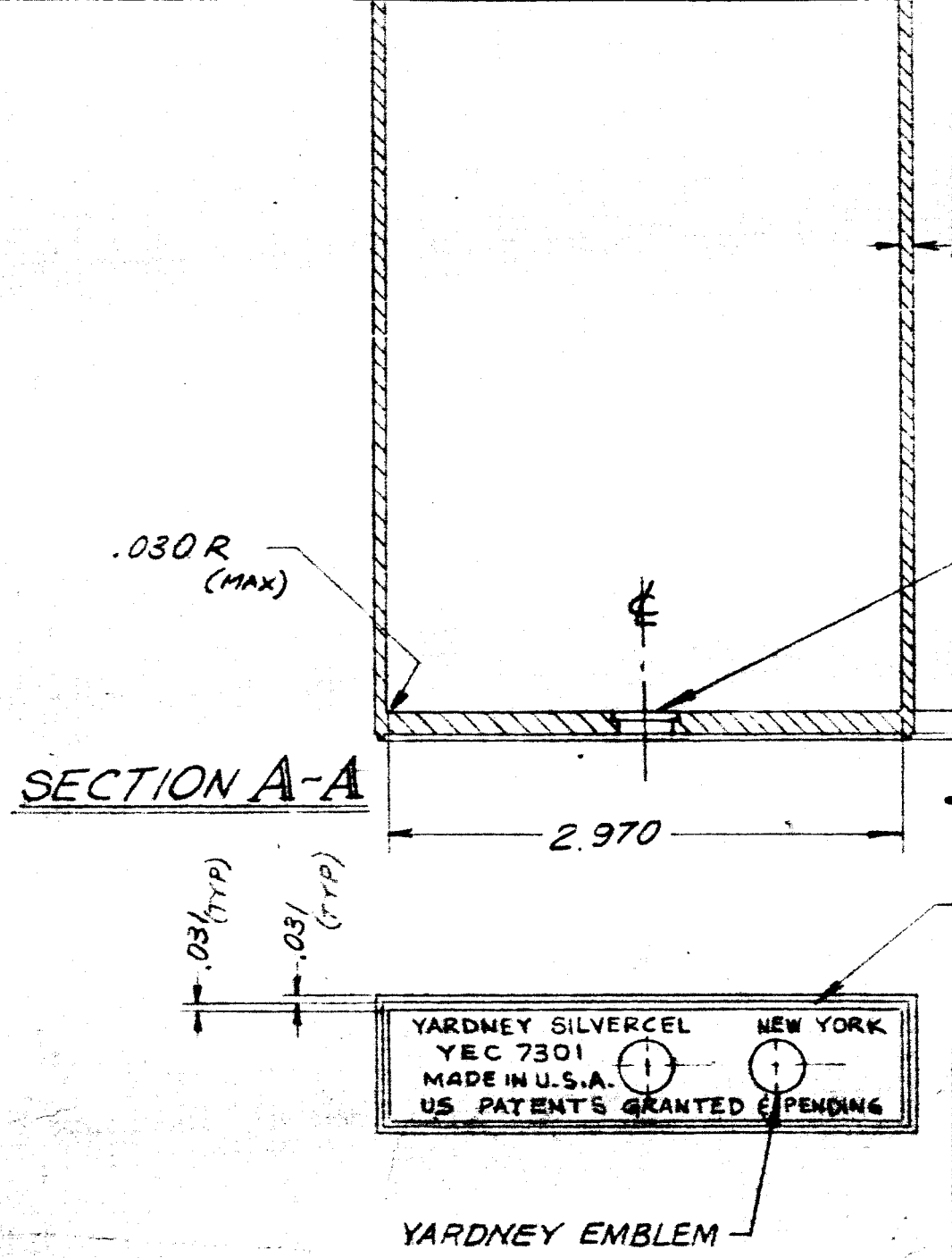
.030 R
(MAX)
SECTION A-A
2.970
.031 (TYP)
.031 (TYP)
YARDNEY SILVERCEL
YEC 7301
MADE IN U.S.A.
US PATENTS GRANTED & PENDING
NEW YORK
YARDNEY EMBLEM

B4

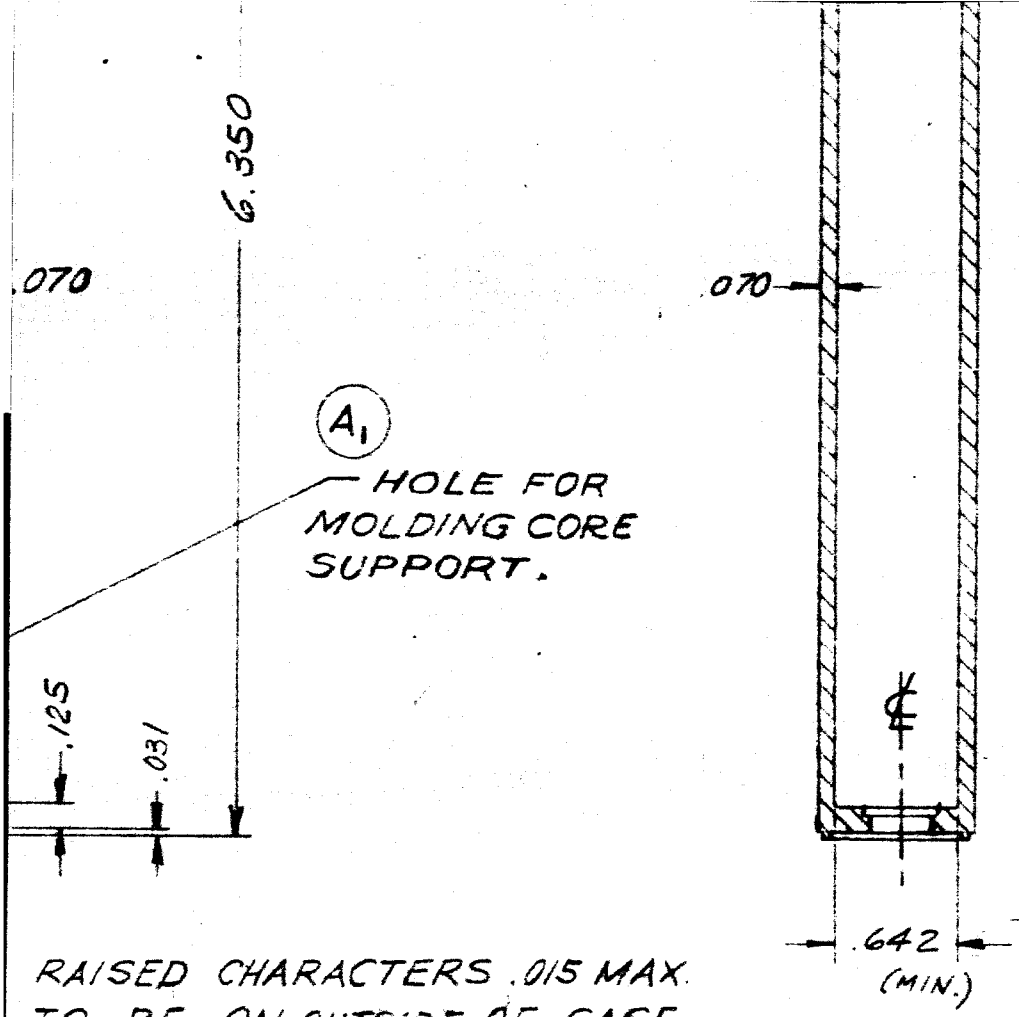

RAISED CHARACTERS .015 MAX. TO BE ON OUTSIDE OF CASE. LAYOUT CHARACTERS TO SUIT.

B5

NEXT ASSY	USED ON	NEXT ASSY	FINAL ASSY
APPLICATION		QTY REQD	

UNLESS OTHERWISE SPECIFIED
DIMENSIONS ARE IN INCHES
TOLERANCES ON

FRACTIONS	DECIMALS	ANGLES
± 1/64	.X ± .XX ± .XXX ± .006	± 1/2°

MATL RMD-4511 (C-11)

FINISH

DRAWN BY A. LOSTA
CHECKED BY C. C
PROJECT EN
APPROVED B
LK E.P

-B

B6

QD	PART NO.	DESCRIPTION	MATL	MATL SPEC	UNIT WT

LIST OF MATERIAL

GLIO	DATE 5-12-60
	DATE 5-13-60
GR	DATE 5-17-60
Y	DATE
	5.18.60
HC	5-19-60

CASE,
CELL
23 AH

YARDNEY ELECTRIC CORP.
NEW YORK 13, N.Y.

DWG NO. 7301

REV. A

SCALE 1/1 | WT | CALC | SCT

SHEET OF

BY _____ DATE _____ SUBJECT D E A

CHKD. BY C.G. DATE _____ Data

JPL Pro

Design Variation	Cell #	Formation #1 Capacity To 1.0 Volt	For Capac 1.45 V
Group 1	1	60.5	60.5
	2	61.0	60.6
	3	63.7	62.0
	4	63.0	62.0
	5	64.0	
Group 2	6	63.7	46.3
	7	67.3	52.0
	8	64.5	50.[illegible]
	9	60.3	54.0
	10	62.0	41.8
Group 3	11	36.2	43.3
	12	35.5	48.7
	13	36.1	45.0
	14	34.2	45.7
	15	36.0	41.2

	Cell #	Cycle #6 Capacity to 1.43 V	1.1 V	Max. Volts
Group 1	1	500	54.0	1.50
	2	48.8	53.5	1.50

/

Syn Cell Test

SHEET NO ____ OF ____

JOB NO. ____

HR43(S)

mation #2		Cycle #1 (1)			
Capacity to 10 V	Plate Voltage	Capacity to 1.43 V	Capacity to 10 V	Plate Voltage	Capacity to 1.43
618	1.51	607	[illegible]	[illegible]	59.
623	1.51	607	[illegible]	[illegible]	53.
660	1.51	605	662	[illegible]	57
667	1.51	592	[illegible]	1.50	57
55.8	1.47	340	38.2	1.46	[illegible]
57.3	1.49	41.7	[illegible]	1.48	[illegible]
57.[illegible]	1.46	41.7	[illegible]	1.48	3[illegible]
[illegible]	1.47	[illegible]	42.0	1.48	[illegible]
47.5	1.47	48.7	55.3	1.48	[illegible]
53.7	1.43	19.2	27.4	1.46	
57.2	1.43	34.7	46.7	1.47	
54.2	1.42	30.7	47.2	1.43	
55.8	1.42	34.5	[illegible]	[illegible]	
56.2	1.42	41.7	47.3	1.42	

Cycle #7		
Capacity to 1.43 V	11 V	Voltage
575 (2)	60.0	1.51
510 (2)	60.0	1.51

#2

APPENDIX I

Cycle #2			Cycle #3			
Cycle to	Plate Voltage	C	Cycle to	Plate Voltage	C
1.0V		1.3V	1.0V		1
2	602	151	658	673	150	6
3	603	151	680	710	150	6
4	604	151	687	703	150	7
5	513	151	693	710	150	1
			650	662	150	5
[illegible]	[illegible]	1.46	350	[illegible]	1.46	[illegible]
[illegible]	[illegible]	1.48	[illegible]	[illegible]	[illegible]	
[illegible]		[illegible]	[illegible]	[illegible]	1.4[illegible]	
[illegible]		150	[illegible]	[illegible]	[illegible]	
[illegible]		[illegible]	470	[illegible]	1.4[illegible]	

Test discontinued for group #3

Notes

A. All capacities are on sample

(1) Discharge for cycle #1 was conducted
(2) Discharge was conducted at 140
(3) Discharge was conducted after [illegible]
(4) Discharge was conducted at 130°F

Report # 637-66

Cycle #1			Cycle #5		
Charge to Plate			Charge to Plate		
[illegible] V	1.0 V	1 Hrs	14.5 V	1.0 V	1 Hrs
0.5 (3)	62.3	1.50	12.5 (4)	51.0	1.50
2.0 (2)	63.3	1.50	27.5 (4)	35.0	1.50
3.3 (2)	57.0	1.51	Test discontinued for cells #3, 4, 5		
[illegible]	51.5	1.51			
[illegible]	60.0	[illegible]			
3.0	34.5	[illegible]	[illegible] (2)	[illegible]	[illegible]
[illegible]	[illegible]	[illegible]	[illegible] (2)	[illegible]	[illegible]

Test discontinued for cells #8, 9, 10.

at 40 F after stabilization
F after stabilization
20 hr charging at 0.050 Amps
after 120 hr charging at 0.050 Amps

4