Nasa CR 65257

SID 65 - 1043 - 2

A GENERAL COMPUTER PROGRAM FOR THE DETERMINATION OF RADIANT-INTERCHANGE CONFIGURATION AND FORM FACTORS

CONFAC II

OCTOBER 1965

GPO PRICE $ _____

CFSTI PRICE(S) $ _____

Hard copy (HC) 7.00

Microfiche (MF) 2.00

ff 653 July 65

FACILITY FORM 602

N66-20999	
(ACCESSION NUMBER)	(THRU)
364	1
(PAGES)	(CODE)
CR 65257	08
(NASA CR OR TMX OR AD NUMBER)	(CATEGORY)

LIBRARY

OCT 19 1965

MANNED SPACECRAFT CENTER
HOUSTON, TEXAS

38

NORTH AMERICAN AVIATION, INC.
SPACE and INFORMATION SYSTEMS DIVISION

Accession No. 09755-65

SID 65-1043-2

A GENERAL COMPUTER PROGRAM FOR THE DETERMINATION OF RADIANT-INTERCHANGE CONFIGURATION AND FORM FACTORS - CONFAC II

October 1965

Prepared by

K. A. Toups
Research Specialist
Power and Environmental Systems

NORTH AMERICAN AVIATION, INC.
SPACE and INFORMATION SYSTEMS DIVISION

FOREWORD

This report documents significant modifications to CONFAC I and CONFAC II, which are digital computer programs used to determine geometric configuration and form factors. These factors are essential to thermal and luminous radiant interchange analyses. This effort, sponsored by the NASA Houston Manned Spacecraft Center under Contract NAS9-4133, was directed by R. Brown and R. Durkee of the Thermal Systems Branch and represents the completion of the second stage in the development of a general form factor computer program.

The original Air Force documentation of CONFAC I and CONFAC II has been revised accordingly; this report is issued in two volumes, identified as SID 65-1043-1 and SID 65-1043-2.

TECHNICAL REPORT INDEX/ABSTRACT

ACCESSION NUMBER	DOCUMENT SECURITY CLASSIFICATION
09755-65	UNCLASSIFIED

TITLE OF DOCUMENT

A GENERAL COMPUTER PROGRAM FOR THE DETERMINATION OF RADIANT-INTERCHANGE CONFIGURATION AND FORM FACTORS—CONFAC II

LIBRARY USE ONLY

AUTHOR(S)

K.A. TOUPS

CODE	ORIGINATING AGENCY AND OTHER SOURCES	DOCUMENT NUMBER
	NAA-S&ID	SID 65-1043-2

PUBLICATION DATE	CONTRACT NUMBER
OCTOBER 1965	NAS9-4133

DESCRIPTIVE TERMS

THERMAL ANALYSIS, RADIATION, CONFIGURATION, FORM FACTORS, CONFAC II

N66-20999

ABSTRACT

A simple numerical method is derived for the determination of the geometric radiant-interchange factors used in radiant heat transfer and illumination. A FORTRAN IV digital computer program utilizing this method is developed which provides a rapid and accurate means of computation of configuration and form factors. The source of flux may be any general plane polygon, and the receiver may be any general plane or nonplanar polygon, the surface of an arbitrary polyhedron, or an arbitrary combination of such surfaces.

It is therefore possible to accurately determine configuration and form factors from a plane surface to another surface occluded by complex intervening surfaces. Form factors are computed rapidly—averaging less than two seconds on the IBM 7094 for simple, unobstructed plane surfaces, and less than 30 seconds for simple polyhedra. Also, means are provided to internally generate a variety of regular polygons or polyhedra and to transform surface spatial coordinates for convenience of data entry and/or motion simulation. Simplicity of data entry, flexibility of application, and economy of operation are principal features of this program. Sample problems illustrating these important aspects are provided.

Author

FORM 131-V REV 11-64
PUBLICATIONS USE ONLY

PREFACE

The FORTRAN IV Computer Program described herein is a modified version of the first CONFAC II program developed in house by North American Aviation, Inc. (Reference 6). CONFAC II evolved from CONFAC I, the original configuration factor program. Because of the increased scope of application, CONFAC II has less computer memory storage available for surface data than CONFAC I. CONFAC I has been actively retained for this reason and must be used when a large number of simple surfaces (see Volume 1 for limitations and restrictions) are to be entered together. The original CONFAC I program has been modified so that no differences appear in data entry from CONFAC II, except that it will accept only simple plane (class 1) or nonplane (class 2) surfaces, and transformation data (class 9).

The range of data handled by CONFAC II has not been changed from the original version. The data classifications remain as follows:

Class 1: plane polygon (silhouette developed directly from input surface coordinate data)

Class 2: nonplane polygon (silhouette developed directly from input surface coordinate data)

Class 3: internally generated polygon (silhouette developed directly from internally generated data)

Class 4: plane polygon (silhouette internally computed from input coordinate and connections data)

Class 5: nonplane surface or solid (silhouette internally computed from input coordinate and connections data)

Class 6: internally generated polygon or solid (silhouette internally computed from internally generated coordinate and connections data)

Class 7: sphere (closed-form factor solution)

Class 8: multisurface (silhouette developed from input or internal coordinate and connections data of a group of surfaces taken together)

Class 9: transformation data.

CONFAC II MODIFICATIONS

The modifications to CONFAC II are as follows:

1. The program source language has been converted from IBM FORTRAN II to FORTRAN IV. Where feasible and desirable, the powerful logical operations of FORTRAN IV have been utilized.

2. Those arithmetic operations in subroutine Silfac that are vital to silhouette computation have been converted to double precision. This change has generally improved silhouette computation, but has not completely eliminated arithmetic imprecision, especially in the case of nearly parallel vectors. More powerful logic must be developed to eliminate difficulty in such cases.

3. The necessary changes have been made to completely remove the restrictions formerly imposed on data entry of "multisurface" class 8 data. The format for a class 8 surface entry has been altered to allow a primary transformation of each surface entered, if desired. Also, any data from class 1 through 6 may now be included in the class 8 entry. Furthermore, a primary transformation of the multisurface may be specified in the factor request. Moreover, it is no longer necessary that surface 1 be in the xy plane of the coordinate system; if it is not, the program will perform the necessary auxiliary transformation to ensure that it is carried out prior to factor computation.

4. Modifications to the silhouette generator have been made which substantially accelerate silhouette computation when a large number of silhouettes along a mapping line are computed.

5. An automatic factor request generator has been incorporated which generates a combinational sequence of factor requests between all the surfaces entered in data. The pseudo-request "GROUPRUN" is specified instead of surface data on a single card, thus eliminating the large amount of data entry previously required in such cases.

6. When a plane polygon is created by the internal surface generator, the specifications can now be used to control the direction of the orientation vector. A primary transformation is no longer required to direct the vector toward the - z axis.

7. Modifications in data entry have been incorporated to permit compression of numerical data by use of FORTRAN IV NAMELIST and to allow printout of card images prior to processing to facilitate rapid scanning for errors or data modifications.

   Because of conversion to FORTRAN IV, usable computer memory has diminished considerably, requiring use of the OVERLAY feature of FORTRAN IV. Modifications to data dimensioning and restrictions are discussed in Section III of this report.

CONTENTS

Section		Page
	INTRODUCTION	1
I	ANALYTICAL PROCEDURES	3
	Configuration and Form Factor	3
	Coordinate Transformation	12
	Silhouette Generator	15
	Surface Generator	19
II	COMPUTER PROGRAM CONTENTS	23
	Program Description	23
	General Rules and Restrictions	31
III	INPUT DATA	33
	Data Specifications and Specific Restrictions	33
	Data Dimension Restrictions	37
	Program Control	37
	Format	38
IV	PROGRAM OUTPUT	51
V	REFERENCES	53
	APPENDIXES	
	A. Sample Problems	55
	B. Program Listings and MAPS	221
	C. Coordinate Transformation	311
	D. Computation of Surface Area of Internally Generated Surfaces	319
	E. Derivation of Configuration Factor to a Sphere	323

ILLUSTRATIONS

Figure		Page
1	Nusselt Geometrical Relationships	4
2	Geometry of New Method of Configuration Factor Computation	10
3	Surface Coordinate Transformation	14
4	Simple Silhouette Geometry	16
5	Complex (Multisurface) Silhouette Geometry	18
6	CONFAC II Surface Generator	22
7	DOICU Surface Generator	25
8	Mapping Procedure	27
9	"T" and "C" Control Card Format	42
10	Class 1 and 2 Surface Input Data Format	43
11	Class 3 Surface Specifications Input Data Format	44
12	Class 4 and 5 Surface Input Data Format	45
13	Class 6 Surface Specifications Input Data Format	46
14	Class 7 Sphere Specification Input Data Format	47
15	Class 8 Multisurface Specifications Input Data Format	48
16	Class 9 Transformation Data Input Data Format	49
17	Run Instructions Input Data Format	50
18	Group A Sample Problems Geometry	56
19	Group A Sample Problems Input Data Code Sheets	59
20	Group A Sample Problems Program Results	64
21	Group B Sample Problems Geometry	102
22	Group B Sample Problems Input Data Code Sheets	104
23	Group B Sample Problems Program Results	107
24	Group C Sample Problems Geometry	135
25	Group C Sample Problems Input Data Code Sheets	136
26	Group C Sample Problems Program Results	139
27	Group D Sample Problems Geometry	147
28	Group D Sample Problems Input Data Code Sheets	148
29	Group D Sample Problems Program Results	151
30	Group E Sample Problems Geometry	165
31	Group E Sample Problems Input Data Code Sheets	166
32	Group E Sample Problems Program Results	172
33	Group F Sample Problems Geometry	186
34	Group F Sample Problems Input Data Code Sheets	188
35	Group F Sample Problems Program Results	196
36	Program Deck Setup	222
37	MAIN Program Listing	223

Figure		Page
38	MAIN Program Core Storage Map	235
39	Subprogram DCODZ	239
40	DCODZ Storage Map	240
41	Subroutine UNIVEC Listing	241
42	Subroutine UNIVEC Core Storage Map	243
43	Subroutine DATA Listing	245
44	Subroutine DATA Core Storage Map	258
45	Subroutine TXFRM Listing	262
46	Subroutine TXFRM Core Storage Map	267
47	Subroutine DOICU Listing	269
48	Subroutine DOICU Core Storage Map	275
49	Subroutine MAP Listing	277
50	Subroutine MAP Core Storage Map	281
51	Subroutine FACTOR Listing	283
52	Subroutine FACTOR Core Storage Map	287
53	Subroutine SILFAC Listing	289
54	Subroutine SILFAC Core Storage Map	304
55	Variable Format	309
56	Coordinate Transformation	313
57	Surface Area Geometry of Internally Generated Polyhedra	320
58	Areas Involved in Configuration Factor to Spheres	324
59	Case IIIb Detail Geometry	325

TABLES

Table		Page
1	Comparison of Configuration and Form Factor Computed by CONFAC II to Those Given in Reference 1	2

NOMENCLATURE

A	Area
e	Exchange coefficient
c	Configuration factor (italicized)
f	Form factor (italicized)
h, k, l	Translation components
i, j, k	Unit vectors along the X-, Y-, Z-axis, respectively
0	Center of unit sphere, origin of coordinate system
R	Radius of sphere
S	Distance between two areas
X, Y, Z or x, y, z	Spatial coordinates of a point relative to X, Y, Z axis
α, β, γ	Direction angles of a line relative to X, Y, Z axis respectively
γ	Angle between Z axis and vector normal to plane
θ	Angle between two vectors
π	Numerical constant = 3.14159 +
ω	Solid angle

Subscripts

A, B, C	Points on an area
s	Sector
ΔA	Finite incremental area

dA	Differential area
dA-A	From a differential area to an area
1, 2,	Areas 1, 2,
12	Area 1 to area 2
ϵ	Elliptical

INTRODUCTION

The geometric form factor, f_{12}, is defined as the fraction of radiant energy emanating from finite surface A_1 and intercepted by another surface A_2.

$$f_{12} = \frac{\text{Flux received by finite surface } A_2}{\text{Flux emitted by finite surface } A_1} \tag{1}$$

The geometric configuration factor, c_{12}, is defined in a similar manner, except that the emitting surface is infinitesimal (sometimes designated as the plane point configuration factor),

$$c_{12} = \frac{\text{Flux received by finite surface } A_2}{\text{Flux emitted by infinitesimal surface } dA_1} \tag{2}$$

The subscripts denote the direction of flow of net flux; c_{12} and f_{12} pertain respectively to the configuration and form factor from surface A_1 to surface A_2. It is assumed that each surface is isothermal and radiates diffusely, i.e., follows Lambert's cosine distribution law.

The "closed-form" determination of the configuration or form factor by classical integration techniques is impossible or impractical in most situations. Experimental techniques and devices have been reported in the literature (Reference 1), and probably the most useful is Pleijel's globoscope (Reference 4). Experimental techniques produce only the configuration factor, however. Nonetheless, they are useful for many applications where only one or a few configuration factors are required and nominal accuracy is sufficient.

However, if a large number of form factors are required in a short period of time, experimental techniques are not practical. This report presents a numerical method and a computer program which permits rapid and accurate computation of configuration and form factors between plane surfaces, and plane or solid surfaces. The source (surface 1) may be any general plane polygon; the receiver (surface 2) may be any arbitrarily oriented general plane or nonplanar polygon, the surface of an arbitrary solid, or an arbitrary combination of planes, nonplanes, or solids. Form factors (which nominally are derived from 625 configuration factors) are computed rapidly, averaging less than 2 seconds by IBM 7094 time for simple plane surfaces,

and less than 30 seconds from simple plane surfaces to simple solids. Table 1 compares solutions obtained by CONFAC II to those given in Reference 1.

Table 1. Comparison of Configuration and Form Factors Computed by CONFAC II to Those Given in Reference 1

Configuration	Reference 1	Computer (Trapezodial Rule)	
		24 x 24 Grid	60 x 60 Grid
P-1, X = 1, Y = 1	0.13853	0.138532	0.138532
X = 0.1, Y = 0.1	0.00314	0.003141	0.003141
X = 1, Y = 4	0.17525	0.175270	0.175270
X = 0.1, Y = 0.4	0.01147	0.011471	0.011471
X = 1, Y = ∞*	0.17678	0.176777	0.176777
X = 0.1, Y = ∞*	0.02488	0.024876	0.024876
P-2, Ø = 30°, L = 0, N = 1	0.4665	0.466506	0.466506
Ø = 30°, L = 1, N = 1	0.1759	0.175923	0.175923
Ø = 30°, L = 0, N = 4	0.4665	0.466506	0.466506
Ø = 30°, L = 4, N = 4	0.0964	0.096447	0.096447
Ø = 120°, L = 0, N = 1	0.125	0.125000	0.125000
Ø = 120°, L = 1, N = 1	0.0236	0.023554	0.023554
Ø = 120°, L = 0, N = 4	0.125	0.125000	0.125000
Ø = 120°, L = 4, N = 4	0.0077	0.007683	0.007683
**P-6, E = 1, D = 1	0.276	0.275	
E = 1, D = 2	0.438	0.436	
E = 1, D = ∞	0.500	0.498	
E = 2, D = 1	0.724	0.722	
E = 2, D = ∞	0.800	0.799	
**P-8, D = 4, L = 2	0.08074	0.08055	
D = 2, L = 4	0.24774	0.2472	
A-1, X = 1, Y = 1	0.19982	0.19972	0.19981
X = 0.1, Y = 0.1	0.00316	0.00316	0.00316
X = 1, Y = 4	0.34596	0.34559	0.34590
X = 0.1, Y = 0.4	0.01207	0.01207	0.01207
X = 1, Y = ∞*	0.41421	0.40549	0.41075
X = 0.1, Y = ∞*	0.04988	0.04884	0.04946
A-2, Ø = 30°, L = 1, N = 1	0.6202+	0.61769	0.61878
Ø = 30°, L = 4, N = 4	0.3961+	0.39431	0.39450
Ø = 120°, L = 1, N = 1	0.0870+	0.08665	0.08662
Ø = 120°, L = 4, N = 4	0.0433+	0.04272	0.04235

*10^8 was assumed to approximate ∞ for computer run
**32-sided regular polygon used to simulate circular cross-section
+These values were obtained by numerical integration across surface A_1, according to Reference 1

SECTION I. ANALYTICAL PROCEDURES

CONFIGURATION AND FORM FACTOR

The general equation that must be solved in the determination of the radiant-interchange form factor is (see Figure 1)

$$f_{12} = \frac{1}{A_1} \iint_{A_1} \iint_{A_2} \frac{\cos\theta_1 \cos\theta_2 \, dA_2 dA_1}{\pi S^2} \tag{1}$$

The following part of the integrand is the factor from the elemental surface dA_1 to the total surface A_2, referred to as the configuration factor or plane point factor, c_{12}:

$$c_{12} = \iint_{A_2} \frac{\cos\theta_1 \cos\theta_2}{\pi S^2} \, dA_2 \tag{2}$$

Therefore,

$$f_{12} = \frac{1}{A_1} \iint_{A_1} c_{12} \, dA_1 \tag{3}$$

A very simple geometric interpretation of Equation 2 is given by Nusselt. The principal value of the Nusselt concept is that the computational procedure is simplified and made more accurate by the fact that no mathematical or numerical integration is required to compute the configuration factor. However, the Nusselt method yields only the configuration factor from the elemental area dA_1; one must still integrate all such factors over surface A_1 to yield the form factor f_{12} as given in Equation 3.

The Nusselt concept utilizes a hemisphere of radius R constructed over the incremental plane area dA_1, as shown in Figure 1. Every point defining the boundary of surface A_2 is projected radially to the hemisphere surface and then vertically downward to the plane of dA_1, the equatorial plane of the hemisphere. The locus of all points thus projected encloses an area, A''_2, on the hemisphere base. This area A''_2, divided by the area of the base, is the configuration factor from dA_1 to A_2.

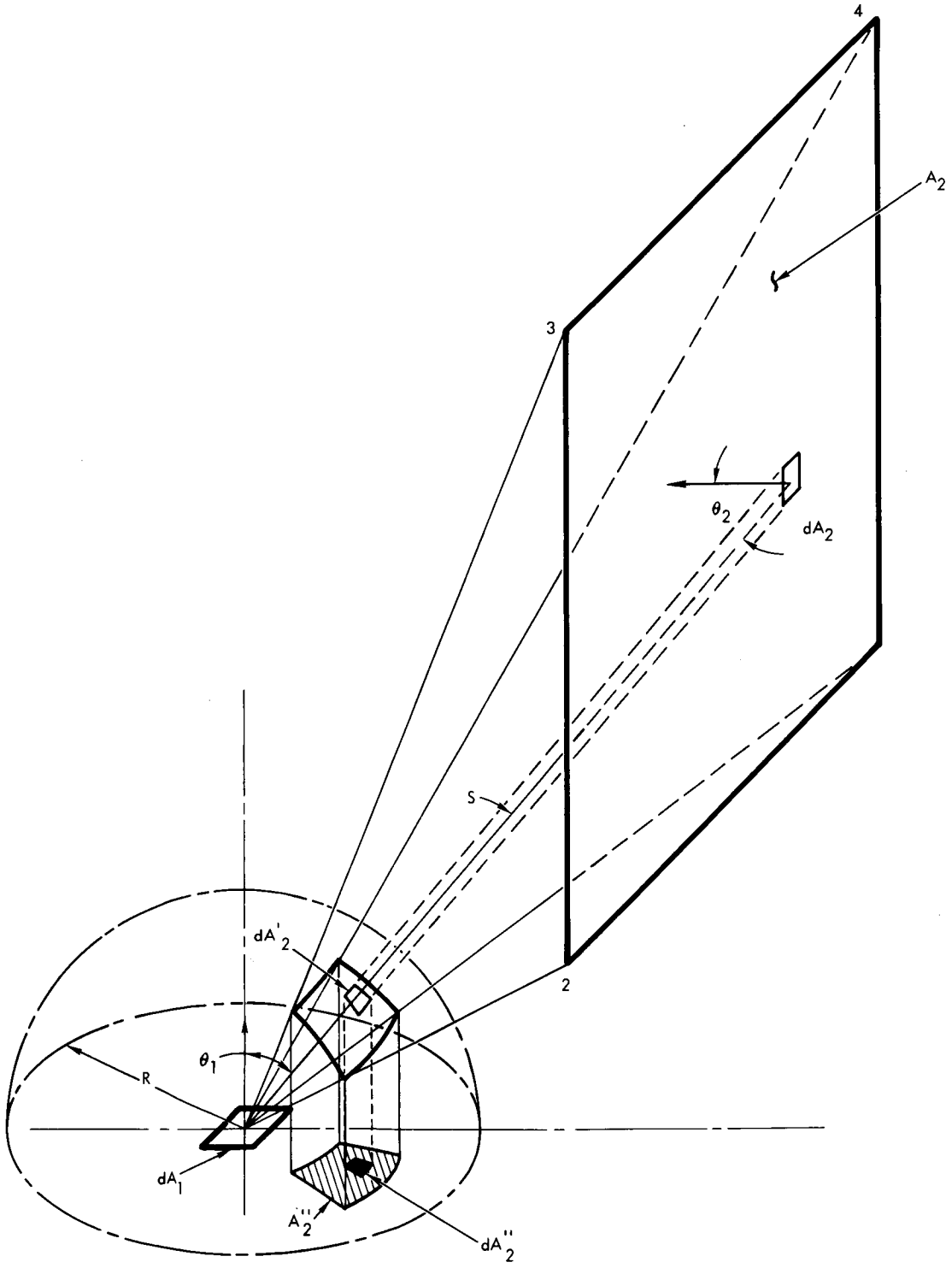

Figure 1. Nusselt Geometrical Relationships

The validity of this conclusion can be demonstrated as follows. Note that the elemental area dA_2 is described in surface A_2 by the elemental solid angle $d\omega_1$, or

$$d\omega_1 = \frac{\cos\theta_2 \, dA_2}{S^2} \tag{4}$$

Similarly, on the sphere having radius R,

$$d\omega_1 = \frac{dA_2'}{R^2} \tag{5}$$

Because dA_2'' is the projection of dA_2 on the hemisphere base,

$$dA_2' = \frac{dA_2''}{\cos\theta_1} \tag{6}$$

Inserting Equation 6 in Equation 5,

$$d\omega_1 = \frac{dA_2''}{R^2 \cos\theta_1} \tag{7}$$

The right side of Equation 4 appears explicitly in Equation 1 and, because Equation 7 is identical to Equation 4, Equation 2 becomes

$$c_{12} = \iint_{A_2} \frac{\cos\theta_1}{\pi} \left(\frac{dA_2''}{R^2 \cos\theta_1} \right) = \frac{\iint_{A_2} dA_2''}{\pi R^2} = \frac{A_2''}{\pi R^2}$$

For a sphere of unit radius (unit sphere),

$$c_{12} = \frac{A_2''}{\pi} \tag{8}$$

which completes the proof of Nusselt's method. By inserting Equation 8 in Equation 3, the original equation becomes greatly simplified; only one area integration is now required.

$$f_{12} = \frac{1}{A_1} \iint_{A_1} \frac{A_2''}{\pi} \, dA_1 \tag{9}$$

The computer program described herein solves Equation 9 numerically by successive algebraic evaluation of A_2'' at preselected points on surface A_1, with subsequent numerical integration to yield f_{12}, or

$$f_{12} = \frac{1}{A_1} \sum \sum_{A_1} \frac{A_2''}{\pi} \Delta A_1 \tag{10}$$

It should be emphasized that area A_2'' is, in fact, formed by the doubly projected silhouette of surface A_2 as it appears from dA_1.

The element dA_1 is assumed to be oriented in the xy plane and at the origin of the coordinate system of surface A_2. The area A_2'' can be found from the line integral where $y_1 = F(x_1)$ is the locus of the boundary of A_2'',

$$A_2'' = \frac{1}{2} \int_C (x_1 \, dy_1 - y_1 \, dx_1) \tag{11}$$

Let $z = F(x, y)$ be the locus of the silhouette of A_2, and S the distance from dA_1 to the point (x, y, z) on the silhouette of A_2.

$$S = \sqrt{x^2 + y^2 + z^2}$$

From similar triangles,

$$x_1 = \frac{x}{S}, \quad dx_1 = \frac{1}{S} dx + x \, d\left(\frac{1}{S}\right)$$

$$y_1 = \frac{y}{S}, \quad dy_1 = \frac{1}{S} dy + y \, d\left(\frac{1}{S}\right)$$

Inserting in Equation 11

$$A_2'' = \frac{1}{2} \int_C \frac{xdy - ydx}{S^2} \tag{12}$$

Equation 12 can be transposed to finite difference form by replacing the differentials with increments for numerical evaluation. Because of the problems of increment size control, it appears desirable to solve Equation 12 for a finite line segment in space and to allow the analyst to control accuracy of configuration factor computation by suitable selection of line segments describing surface 2. If the surface is actually a polygon or polyhedra, the

simulation is perfect; if the surface boundary is curved, like a disk, for example, the validity of the result is a function of the number of line segments used.

However, a much simpler and more easily understood geometric derivation, using the unit sphere, yields the result in superior computational form. Referring to Figure 2, note that the radial projection of line segment AB on the hemisphere surface forms the circular arc A'B'. Projection of A'B' to the base plane produces the elliptical arc A''B'', forming the elliptical section A''OB'' with the origin.

If all line segments describing surface 2 are similarly projected, the area A_2'' will be formed by a closed series of elliptical arcs. Surface A_2 does not have to be a plane. Actually, the area A_2'' results from the geometry of a silhouette; any surface or object projecting an identical silhouette in the same spatial position on the hemisphere surface will produce the same area A_2'' and the same point factor.

Inspection reveals that the magnitude of area A_2'' can be determined by computing the area of each elliptical sector, properly signed, followed by an algebraic summation.

In Figure 2, the area of elliptical sector A_ϵ is the projected area of circular sector A_s. If the angle between the plane of the circular sector A'OB' and the xy plane is γ, then

$$\cos \gamma = \frac{A_\epsilon}{A_s} \tag{13}$$

The area A_s is computed from the usual polar equation, with θ in radians,

$$A_s = \frac{1}{2} R^2 \theta$$

For the unit radius sphere,

$$A_s = \frac{\theta}{2} \tag{14}$$

Substituting Equation 14 in Equation 13, and solving for A_ϵ,

$$A_\epsilon = \frac{\theta}{2} \cos \gamma \tag{15}$$

For a polygon of N sides, the net area A_2'' is found by algebraic summation of all computed A_ϵ.

$$A_2'' = \frac{1}{2}\left|\sum_{n=1}^{N} \theta_n \cos \gamma_n\right| \tag{16}$$

Substituting in Equation 8, we have

$$c_{12} = \frac{1}{2\pi}\left|\sum_{n=1}^{N} \theta_n \cos \gamma_n\right| \tag{17}$$

A general analytical derivation of this equation is given in Reference 3, and is reported to have been originally developed by Omoto in 1924.

The absolute value notation will be explained later. The use of vector algebra greatly facilitates the computation of θ and $\cos \gamma$. Taking, for example, directed line segments of $\vec{OA}$ and $\vec{OB}$, the vector dot product is

$$\vec{OA}\cdot\vec{OB} = x_A x_B + y_A y_B + z_A z_B \tag{18}$$

The cross product $\vec{OA} \times \vec{OB}$ in determinant form is

$$\vec{OA} \times \vec{OB} = \begin{vmatrix} i & j & k \\ x_A & y_A & z_A \\ x_B & y_B & z_B \end{vmatrix}$$

which, upon expansion, becomes the normal vector $\vec{V}_N$,

$$\vec{V}_N = \vec{OA} \times \vec{OB} = (y_A z_B - z_A y_B)i + (x_B z_A - z_B x_A)j + (z_A y_B - x_B y_A)k \tag{19}$$

where i, j, and k are mutually orthogonal unit base vectors directed along the principal axes.

$\vec{V}_N$ is equal in magnitude to twice the area of the triangle AOB and is oriented normal to the plane of AOB so that the three vectors form a right-handed system. The magnitude is computed by the Pythagorean theorem,

$$\left|\vec{V}_N\right| = \sqrt{(y_A z_B - z_A y_B)^2 + (x_B z_A - x_A z_B)^2 + (x_A y_B - x_B y_A)^2} \tag{20}$$

The angle θ may be evaluated from either the dot or the cross product by use of inverse functions, specifically

$$\theta = \cos^{-1}\left[\frac{\vec{OA}\cdot\vec{OB}}{\vec{OA}\,|\,|\vec{OB}}\right] \quad \text{or} \quad \sin^{-1}\left[\frac{|\vec{V_N}|}{|\vec{OA}|\;|\vec{OB}}\right]$$

However, an overall economy of computation results from the use of the arctan function,

$$\theta = \tan^{-1}\left[\frac{|\vec{V_N}|}{\vec{OA}\cdot\vec{OB}}\right] \tag{21}$$

As noted earlier, the angle γ is defined as the angle between the plane of AOB and the xy plane. It is also the angle between the vector $\vec{V}_N$ and the z axis; $\cos\gamma$ is therefore the direction cosine of $\vec{V}_N$ with respect to the z axis. Using the z component in Equation 19,

$$\cos\gamma = \frac{x_A y_B - x_B y_A}{|\vec{V_N}|} \tag{22}$$

If the numerator and denominator are both divided by 2,

$$\cos\gamma = \frac{\dfrac{x_A y_B - x_B y_A}{2}}{\left|\dfrac{\vec{V_N}}{2}\right|}$$

This shows that $\cos\gamma$ is also equal to the ratio of the signed projected area of triangle AOB on the xy plane and the plane area of triangle AOB.

In the right-handed system shown, $\cos\gamma$ is positive when the order of computation of the vectors in the cross product causes the normal vector $\vec{V}_N$ to point in the direction of the +z axis ($0 < \gamma < 90$). The order in which one proceeds from point to point on the boundary of surface 2 will sign each elliptical sector accordingly; however, because the sectors are summed algebraically, the same absolute magnitude will result regardless of order. Because the point factor is always a positive number, the order is computationally unimportant. Nevertheless, the program requires that data be entered in counterclockwise order for other reasons. This will be discussed in more detail later.

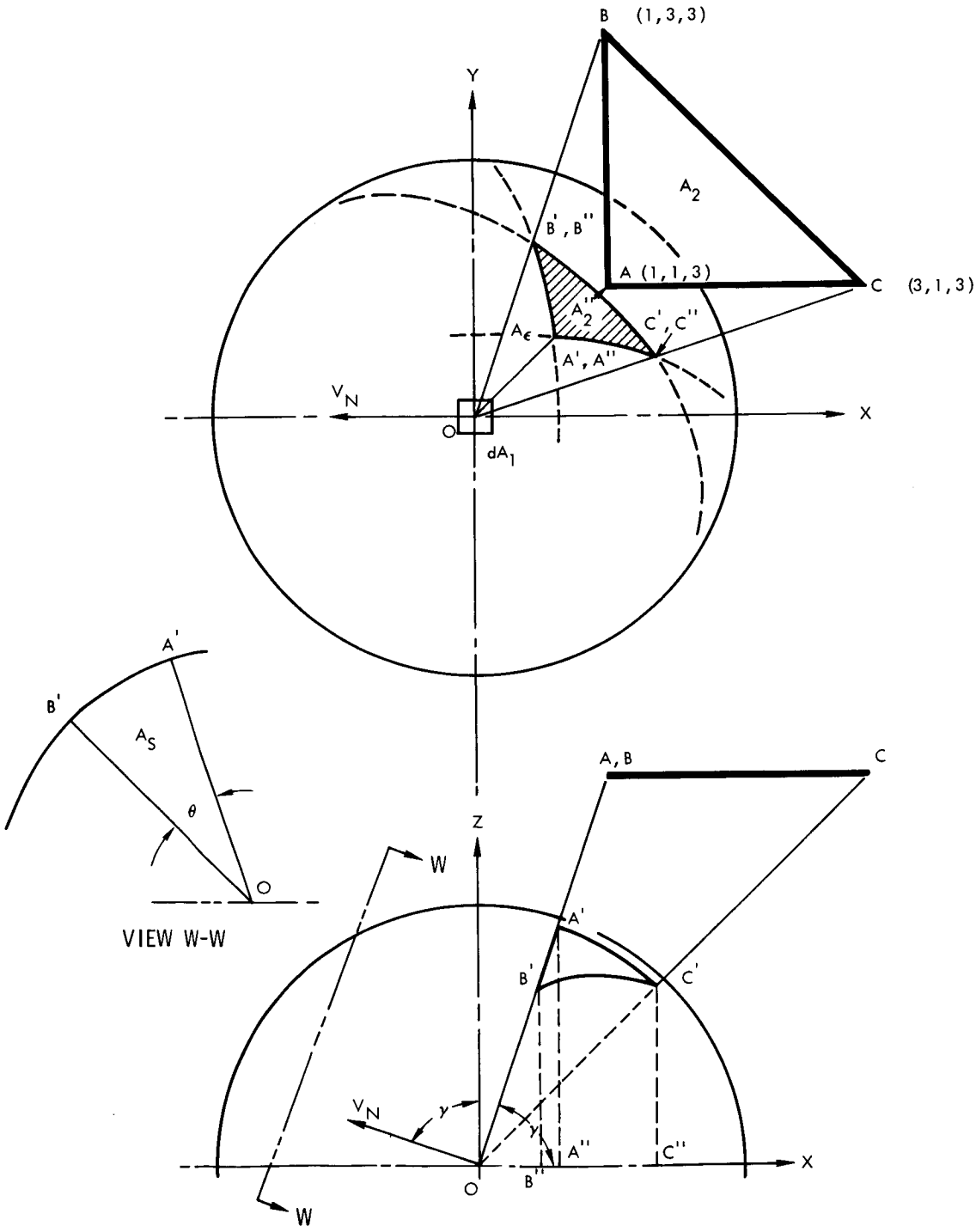

Figure 2. Geometry of New Method of Configuration Factor Computation

The relative ease with which the point factor can be computed is best illustrated by an example. Using the triangle shown in Figure 2, and starting with line segment AB, from Equation 18.

$$\vec{OA} \cdot \vec{OB} = 1 + 3 + 9 = 13$$

From Equation 20

$$\left|\vec{V}_{AB}\right| = \left|\vec{OA} \times \vec{OB}\right| = \sqrt{(-6)^2 + 0 + (2)^2} = \sqrt{40}$$

From Equation 21

$$\theta_{AB} = \tan^{-1}\left[\frac{\sqrt{40}}{13}\right] \cong 0.453$$

From Equation 22

$$\cos \gamma_{AB} = \frac{2}{\sqrt{40}} = 0.316$$

Moving to BC,

$$\vec{OB} \quad \vec{OC} = 3 + 3 + 9 = 15$$

$$|\vec{V}_{BC}| = \sqrt{6^2 + 6^2 + (-8)^2} = \sqrt{136}$$

$$\theta_{BC} = \tan^{-1}\left[\frac{\sqrt{136}}{15}\right] \cong 0.661$$

$$\cos \gamma_{BC} = \frac{-8}{\sqrt{136}} = -0.686$$

Finally, line segment $\vec{CA}$,

$$\vec{OC} \quad \vec{OA} = 3 + 1 + 9 = 13$$

$$\vec{V}_{VA} = \sqrt{0 + 6^2 + (-2)^2} = \sqrt{40}$$

$$\theta_{CA} = \tan^{-1}\left(\sqrt{\frac{40}{13}}\right) \cong 0.453$$

$$\cos \gamma_{CA} = \frac{2}{\sqrt{40}} = 0.316$$

The configuration factor is, therefore, from Equation 17,

$$c_{12} = \frac{1}{2\pi}\left| \; 2(0.453)\,(0.316) + (0.661)\,(-0.686) \; \right|$$

$$= \frac{1}{2\pi}\left| \; -0.167 \; \right|$$

$$c_{12} = 0.0266$$

Note the repetitive nature of the computation. Thus, all surfaces represented by straight line segments in space can be analyzed in the simple, direct manner shown.

COORDINATE TRANSFORMATION

The task of computing factors, even when simple "closed-form" solutions are available, is often laborious because the surfaces under consideration appear in difficult, skewed relative positions. A significant part of this effort has been eliminated by the program through the possibility of general coordinate transformation (translation and/or rotation). Surface data may be entered for each surface using an individually convenient local origin. The surfaces may then be linked together by transforming one or both surfaces to a convenient third origin which is common to both surfaces. The fact that internally generated surfaces may also be transformed makes this feature a very powerful tool.

Actually, two different types of coordinate transformation are used by the program. The transformation discussed in the prior paragraph is termed a "primary" transformation, and is under control of the user through transformation data entry. The second type of transformation is termed an "auxiliary" transformation, and is under internal program control only. An auxiliary transformation transforms the surface coordinates of <u>both</u> surfaces into a new coordinate system formed so that the xy plane of the coordinate system lies in the reference plane of one of the surfaces. The reference plane of a surface is the plane formed by the first, second and last point describing that surface. The origin of an auxiliary coordinate system is located at point 1 in the particular surface controlling the transformation.

The x-axis is directed along the line segment formed by points 1 and 2. The surface unit orientation vector becomes the z-axis; the y-axis is computed orthogonal to the x- and z-axes, thus locating the xy plane in the control surface reference plane.

The auxiliary transformation actually serves two purposes. First, it is utilized by Subroutine DOICU to facilitate reconstruction of the "seen" part of surfaces that are not entirely seen by the other surface. Second, the program requires that prior to computation of the configuration factors, surface 1 must appear in the xy plane of the final coordinate system along with surface 2 in its proper relative position. This is necessary to enable Subroutine MAP to select points on surface 1 from which factors to surface 2 may be directly computed, or from which silhouettes of surface 2 may be generated and factors computed.

For example, suppose Figure 3 represents the surfaces of various items of equipment appearing in a compartment. The unprimed coordinate system shown may be conveniently chosen at a corner or axis of symmetry, possibly as shown on a mechanical drawing. This system may not be convenient for data entry of the disk, however. The primed coordinate system with the origin at the center of the disk is the more logical choice in this case. The previously described surface generator will generate the disk about this origin. The disk data can then be transformed from the primed to the unprimed system by a primary transformation. The choice of generating the cube and transforming, or directly entering data from the unprimed system, is left to the user as it requires approximately the same effort either way. The plate coordinates can be easily entered from the unprimed system. Now, suppose we desire the form factor from the disk to the plate. If the data are entered as discussed above (including the transformation data), the program will generate the disk and then primary transform disk coordinates to the unprimed system. Since the disk is bisected by the plate, an auxiliary transformation of all coordinates, both disk and plate, will be made from the unprimed to the quad-primed system. Now, that portion of the disk appearing above the active side of the plate will be determined, and an auxiliary transformation of the plate and truncated disk will be made to the double primed coordinate system, i.e., the reference plane of the disk. The disk is now in a position for mapping, and the plate coordinates are proper for obtaining the configuration factors. A similar manipulation of surface data would be made to obtain the form factor to the cube with one exception — no truncation of the disk would occur and the auxiliary transformation to the double-primed system would occur immediately after primary transformation.

The transformation technique utilized for a primary transformation differs from the customary method whereby old coordinates plus translation data and direction cosines or Euler angles are supplied, from which a new set of coordinates are derived. The program requires the coordinates of

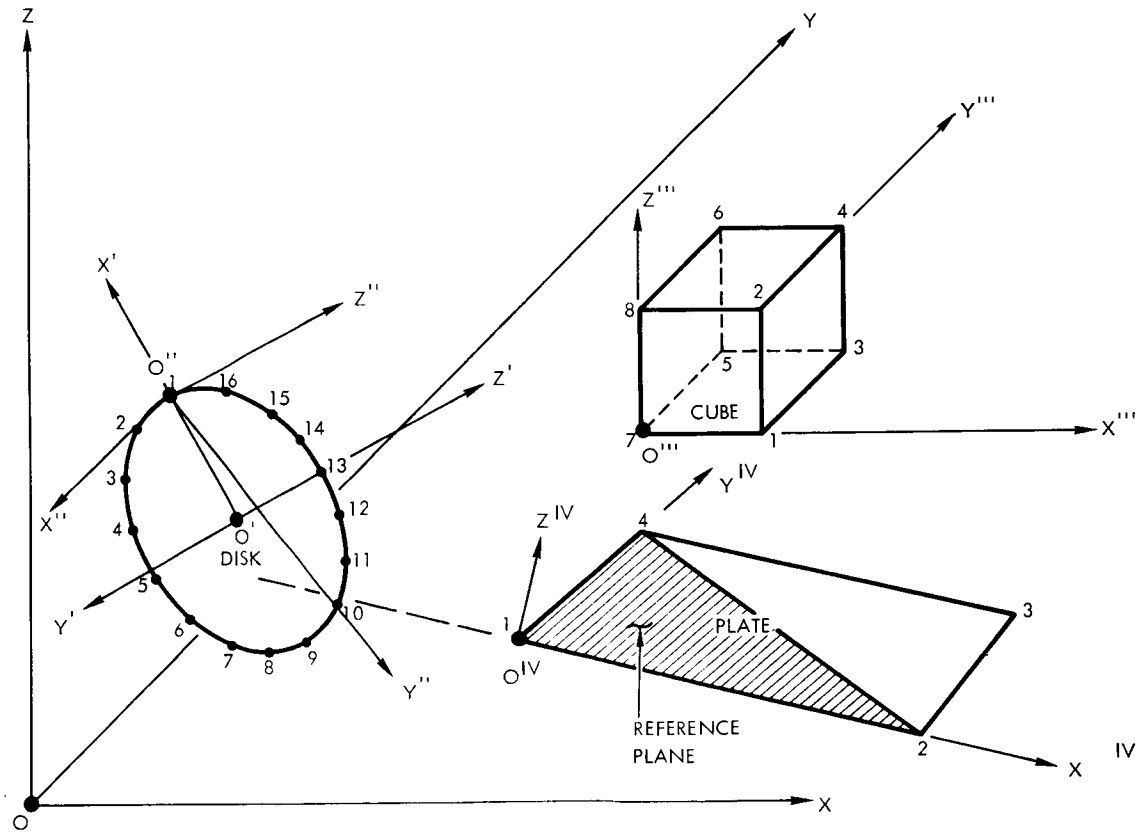

Figure 3. Surface Coordinate Transformation

any three points (not in a line) measured from the new origin. These data are then used to derive direction cosines and translation terms, by which the old coordinates are then transformed to the new origin.

The reader may find it easier to visualize transformation in terms of the movement of the surfaces instead of the origins. In the case of the disk, again referring to Figure 3, we may say we generated the disk with its center at the origin of the unprimed system and in its xy plane, and then moved the surface to the position indicated by the primed system. This viewpoint appears more realistic when motion is simulated by transforming a surface along a particular path.

The mathematical treatment of primary and auxiliary transformation is presented in Appendix C of this volume.

SILHOUETTE GENERATOR

Data representing a solid surface cannot be directly used as Surface 2 in a configuration factor computation. Subroutine FACTOR requires that a single array be made available containing the surface boundary points. and requires only those points, which, when taken in numerical sequence, form a valid silhouette of surface 2 from a particular point in surface 1. Generally, it is impossible to satisfy this requirement with a single input array if surface 1 is finite and surface 2 is arbitrarily nonplanar or solid. It is the function of the silhouette generator to determine which points in a given set of surface 2 data form the silhouette from preselected viewpoints on surface 1.

The silhouette generator computes the silhouette from the perspective of surface 2 developed on the z-unity ($Z = +1$) plane. The perspective on the z-unity plane is the locus formed in the plane by the boundary of the solid angle subtended by surface 2.

For example, the view of a cube from two positions on the xy plane is shown in Figure 4. The coordinates of each point in the z-unity plane are derived in the following manner from the coordinates of its corresponding point on the cube. Note the triangle formed by the origin, point 2 in the cube, and point Q, the vertical projection of point 2' on the xy plane. A similar triangle is constructed from point 2 to point N. From similar triangles,

$$\frac{ON}{OQ} = \frac{Z_2'}{Z_2} \tag{22}$$

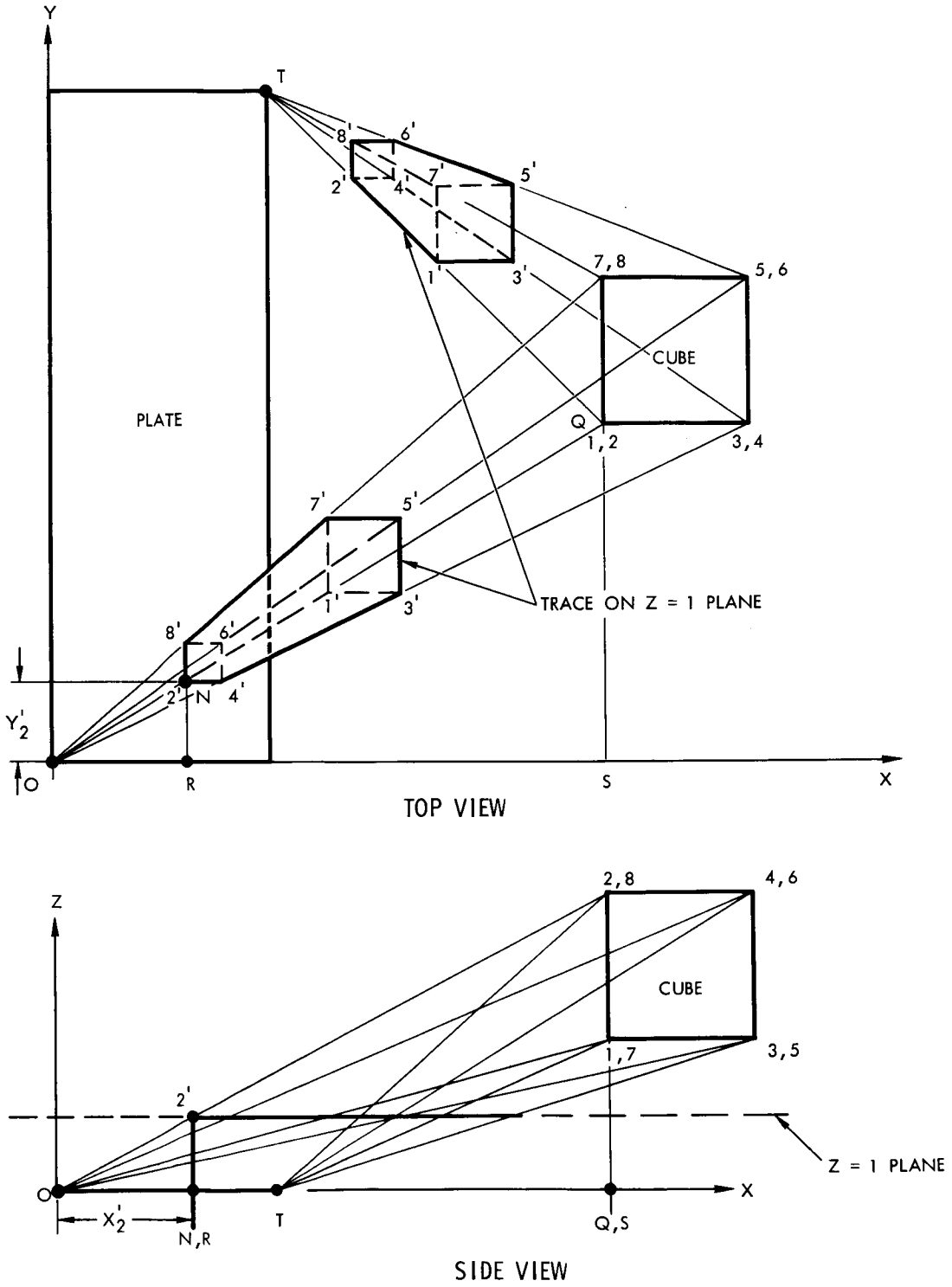

Figure 4. Simple Silhouette Geometry

In like manner, using triangles RON and SOQ in the top view,

$$\frac{ON}{OQ} = \frac{OR}{OS} = \frac{NR}{QS}$$

but $OR = X_2'$, $OS = X_2$, $NR = Y_2'$, $QS = Y_2$ and $Z_2' = 1$.

Therefore,

$$\frac{X_2'}{X_2} = \frac{Z_2'}{Z_2} = \frac{1}{Z_2}$$

$$X_2' = \frac{X_2}{Z_2} \tag{23}$$

and similarly,

$$Y_2' = \frac{Y_2}{Z_2} \tag{24}$$

This reduction to two dimensions results in considerable simplification. Given the coordinates (x, y) and point connections data, it is possible to determine the line segments forming the silhouette by application of a simple criterion. At each point on the silhouette, those line segments forming the largest included angle define the silhouette. For example, at point 2' in the lower silhouette in Figure 4, vectors 2' - 8', 2' - 1' and 2' - 4' emerge from the point. Vectors 2' - 8' and 2' - 4' obviously form the silhouette, and can be numerically selected by applying the criterion.

Figure 5 shows the development of the z-unity plane silhouette of a multisurface. In contrast to point D, surfaces S2 and S3 appear separated in the silhouette when viewed from C.

Note the line connecting 4 to 7. This device, a "bridge" line, is utilized to cause the silhouette generator to include both surfaces in the silhouette, otherwise surface S3 would be ignored. Because the line has no width, it has no effect on the factor computation, but the silhouette generator follows the line as if it were a boundary of the multisurface S2 plus S3.

The distinguishing difference between the silhouettes shown in Figure 4 and Figure 5 is the fact that "crossover" occurs in Figure 5. The silhouette at a crossover is formed by intersecting line segments at a point between line segment extremities. The detection of such intersections, and the

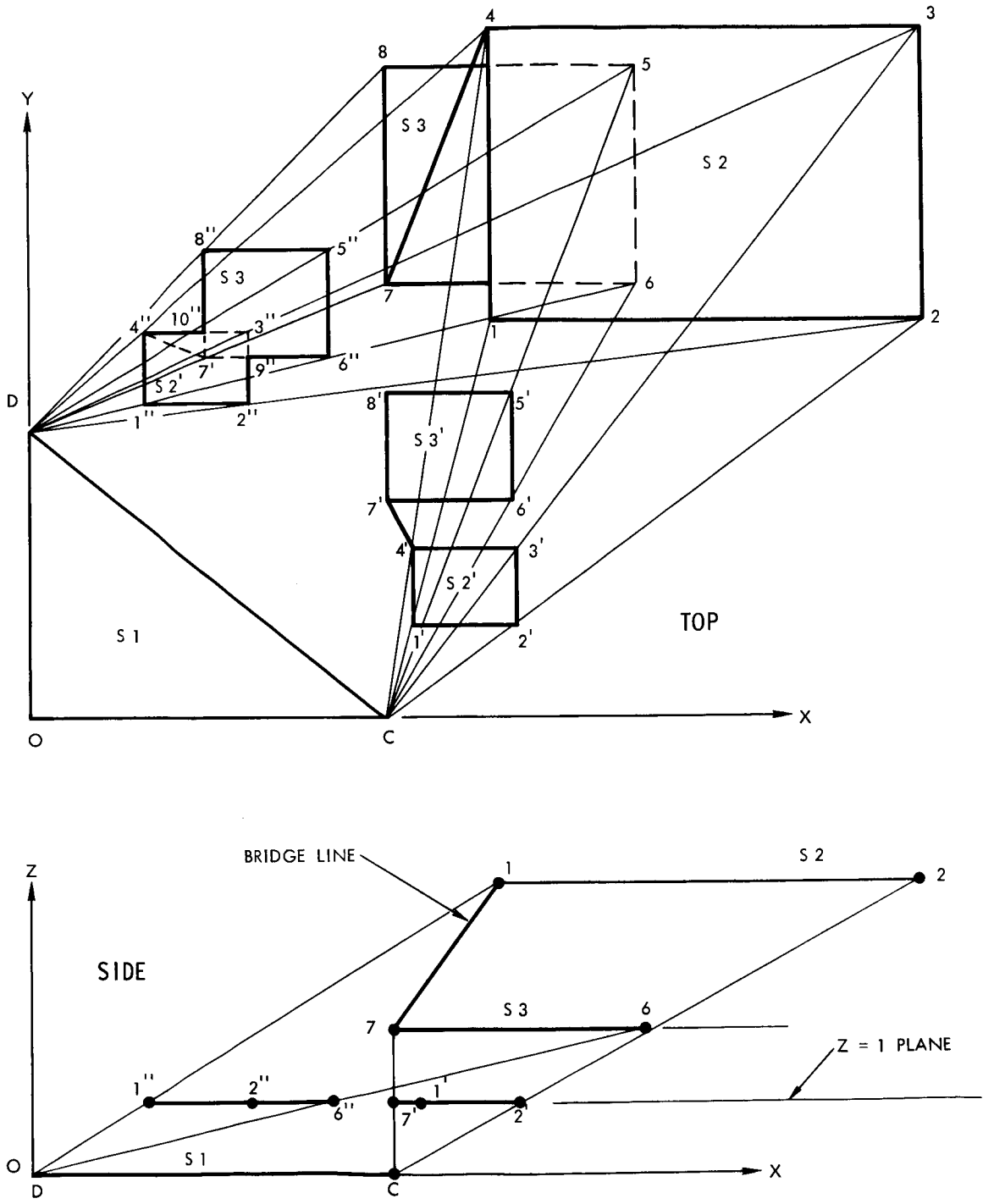

Figure 5. Complex (Multisurface) Silhouette Geometry

computation of the coordinates of the intersection, requires considerable analysis with resultant increased computer time. Because of this, silhouette analysis is termed "simple" if no investigation is made by the silhouette generator to detect crossovers, and "complex" when such is made. Only multisurface data (class 8) are run in the complex mode. All other surface data requiring the silhouette generator (classes 4, 5 and 6) are run in the simple mode.

SURFACE GENERATOR

The program cannot directly compute factors to curved surfaces or boundaries such as disks, cylinders, etc. A series of line segments must be substituted for a curved line. In general, the more line segments used, the more accurate the simulation. Because every surface point requires three coordinates (and connecting points data, when the silhouette must be computed), preparation and entry of data for even a modest simulation of a cylinder can involve a considerable amount of effort. The internal surface generator eliminates most of this effort.

The surface generator is used to create surfaces entered under data classes 3 or 6. Regular plane polygons are created under class 3, but no connections data are generated. A regular plane polygon or solid surface, including connections data, is created under a class 6 entry.

The surface generator "creates" a surface in accordance with cross section specifications. The following information is required to create a class 3 surface:

1. Number of cross section division (sides) ≥ 3
2. Coordinates (x, y, z) of center of polygon
3. X-axis radius
4. Y-axis radius.

Because of a class 6 surface may have one or more cross sections, the following data are required:

1. Number of cross section division (sides) ≥ 3
2. Number of cross sections
3. Coordinates (x, y, z) of first cross section

4. X-axis radius of first cross section

5. Y-axis radius of first cross section.

If more than one cross section is specified, the following data are required for each additional cross section: x-axis radius, y-axis radius and z-coordinate. All cross sections are created parallel to the xy plane of the generator coordinate system, and may be specified above or below the xy plane. Note that xy coordinates are required to locate the first cross section only. If more than one is specified, all are oriented along the same vertical centerline to the position specified by the respective z-coordinate.

The basic generating element is the ellipse. Because only complete polygons are generated, the total angle of 2π radians about the vertical centerline is divided by the number of sides specified to yield the unit parametric angle ϕ in the equations of the ellipse:

$$\phi = \frac{2\pi}{N}$$

$$X = (XR) \cos \phi$$

$$Y = (YR) \sin \phi$$

Instead of the conventional semi-major and semi-minor expressions, the terms "x-radius" and "y-radius" are utilized; the larger of the two becomes the semi-major axis as shown in Figures 6 (a), (b), and (c). When $|XR| = |YR|$, the generating figure is circular and a regular polygon of N sides results. Notice that the generating figure always circumscribes the generated polygon. If both XR and YR are positive, the program will generate point 1 to the right (toward the +x axis) of center as shown in Figure 6 (c), proceeding in a counterclockwise manner about the vertical centerline to complete the remaining point. The orientation vector computed for this surface will point toward the +z axis denoting that the active side of the surface is the "upper" side, i.e. the +z side. If one desires the opposite, or -z side, to be the active side, the value of YR is made negative. This will cause the points to be generated in a clockwise manner from point 1. However, the surface data, and therefore the orientation vector, can also be reversed by means of the pseudo-transformation entry "9R" discussed in more detail later.

Figure 6 (d) shows an eight-sided polygon elevated above the xy plane. Figure 6 (e) indicates the order in which point numbers are assigned to a solid surface. The first point is always assigned to the first coordinates in the first cross section. Numbers are assigned in numerical sequence vertically

until the last cross section is numbered, for a particular value of ϕ; the sequence is continued in similar manner with the first cross section and the next value of ϕ, until all points are defined.

Point connections data are also computed for each point for class 6 surfaces. For example, in Figure 6 (e), points 2, 3 and 15 are computed for point 1; points 1, 4 and 16 are computed for point 2, etc. This information is used by the silhouette generator.

An example of the variety of objects which may be created by a few cards of specifications are shown in Figure 6 (f). The cone vertex is generated merely by specifying zero x-radius and y-radius.

The internal surface generator also computes the surface area of the generated solid, if the cross sections are similar. Because the silhouette generator analyzes the solid figure, the total surface area is computed. For instance, the area of the prismatic cylinder shown in Figure 6 (e) would include the top and bottom polygons. The surface area computation analytical development is given in Appendix D.

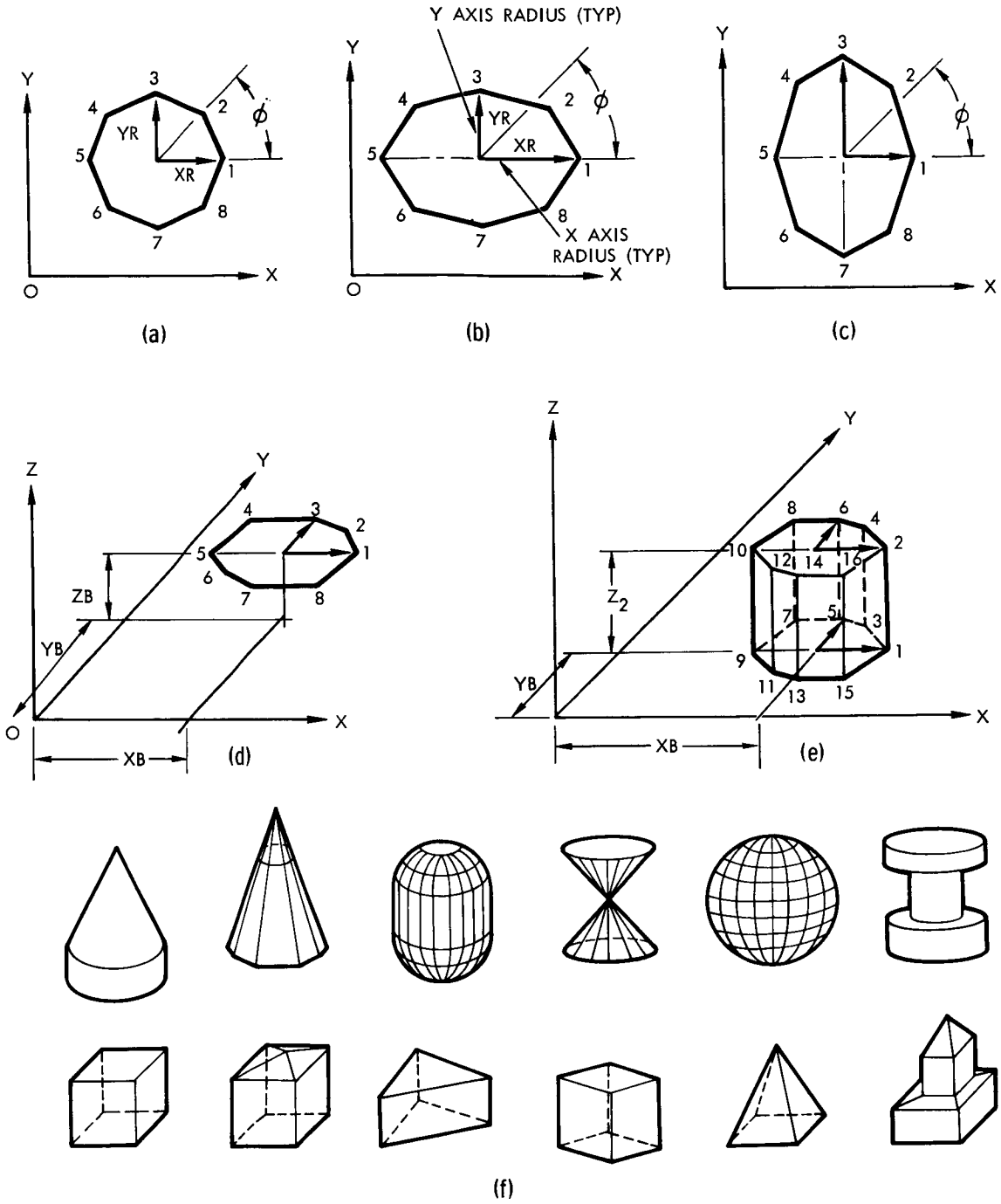

Figure 6. CONFAC II Surface Generator

SECTION II. COMPUTER PROGRAM CONTENTS

PROGRAM DESCRIPTION

The program is written in IBM 7094 FORTRAN IV source language. The source deck consists of the main program and subprograms UNIVEC, DCODZ, DATA, TXFRM, DOICU, MAP, SILFAC and FACTOR. Algebraic routines required from library tape are SQRT (square root), ARCTAN (inverse tangent trigonometric function), COS (cosine trigonometric function), and SIN (sine trigonometric function). FORTRAN logical tapes 5 and 6 are used in the NAA computing system "NAASYS" for input/output. Logical tape 3 is used by CONFAC when card image printout of data is desired. IBM-IBSYS facilities utilizing different input/output tape numbers may easily alter tape assignments by using a $NAME control card. The source programs are presently dimensioned so that a 32 K core size is required.

Main Program

The main program reads title cards, comments cards, surface data and transformation data name cards and run instructions (factor requests) from input tape 5. If a card image printout is desired, each card image is printed on output tape 6 and auxiliary tape 3. After reading is terminated by an END card, tape 3 is then used as the input tape. Upon detection of surface or transformation data name cards, control is transferred to subroutine DATA.

When a factor request card is detected, the main program directs flow as required to subroutines TXFRM, DOICU, MAP and FACTOR or SILFAC depending upon whether the silhouette generator is required or not. The complex procedure of assembling multisurfaces is accomplished in the main program to permit efficient execution of surface transformation requirements. Program results are output by the main program.

Subroutine UNIVEC

This subroutine computes the components of a unit orientation vector normal to the reference plane formed by the first, second and last point in surface data classes 1, 3, 4 and plane 6. The cross product of vectors 1-2 and 1-last is computed and normalized. The vector is formed normal to point 1, and is located on the active side of the surface, thus orienting the surface.

It also computes a new fourth point normal to the new three points submitted in transformation data and an old fourth point normal to the old three points in the surface data to be transformed.

Subroutine TXFRM

The first section performs the auxiliary transformation. This transformation is used to reconstruct a surface which is bisected by the second surface. It also tests surface 1 to determine if the reference plane is substantially in the xy plane of its coordinate system. If it is not, an auxiliary transformation is effected to move the surfaces to fulfill this requirement prior to computation of silhouettes or factors.

This subroutine also performs a primary transformation as indicated by run instructions and transformation data. This transformation, if indicated for a surface, is accomplished prior to entry to subroutine DOICU so that tests of the surface "view" of each other occur in their transformed position(s).

The pseudo-transformation "9R" is accomplished in this subroutine. This operation merely reverses the order of data entry and orientation vector of plane surfaces as indicated in the factor request. The original surface data is not disturbed by any transformation; temporary storage is utilized.

Subroutine DOICU

The function of this subroutine is conveyed literally by its name DO-I-C-U. Given surfaces A1 and A2 with the "active" side of each surface identified by the surface orientation unit vector, the question is asked: Is all, part, or none of surface A1 "seen" by A2? Conversely, does A2 see all, none, or part of A1? This is accomplished by computing the vector dot product formed by the unit vector in one surface with the vector formed by point 1 in the first surface and each point in the other surface (see Figure 7). The sign of the dot product indicates whether the angle between the vectors is less than or greater than 90°, which reveals the position of the point relative to the plane of the viewing surface. In Figure 7 (a) the dot products from surface A1 to A2 are all positive, and conversely, from A2 to A1 are also all positive: A1 sees all of A2; A2 sees all of A1. However, in Figure 7 (b) all dot products from A2 to A1 are positive, but from A1 to A2 all are negative. Hence, in general, if all dot products from one surface to another are negative, then the surfaces do not see each other, even though the converse products may be positive. There is also the trivial case where all products are zero, in which case the surfaces are in the same plane, and obviously cannot see each other.

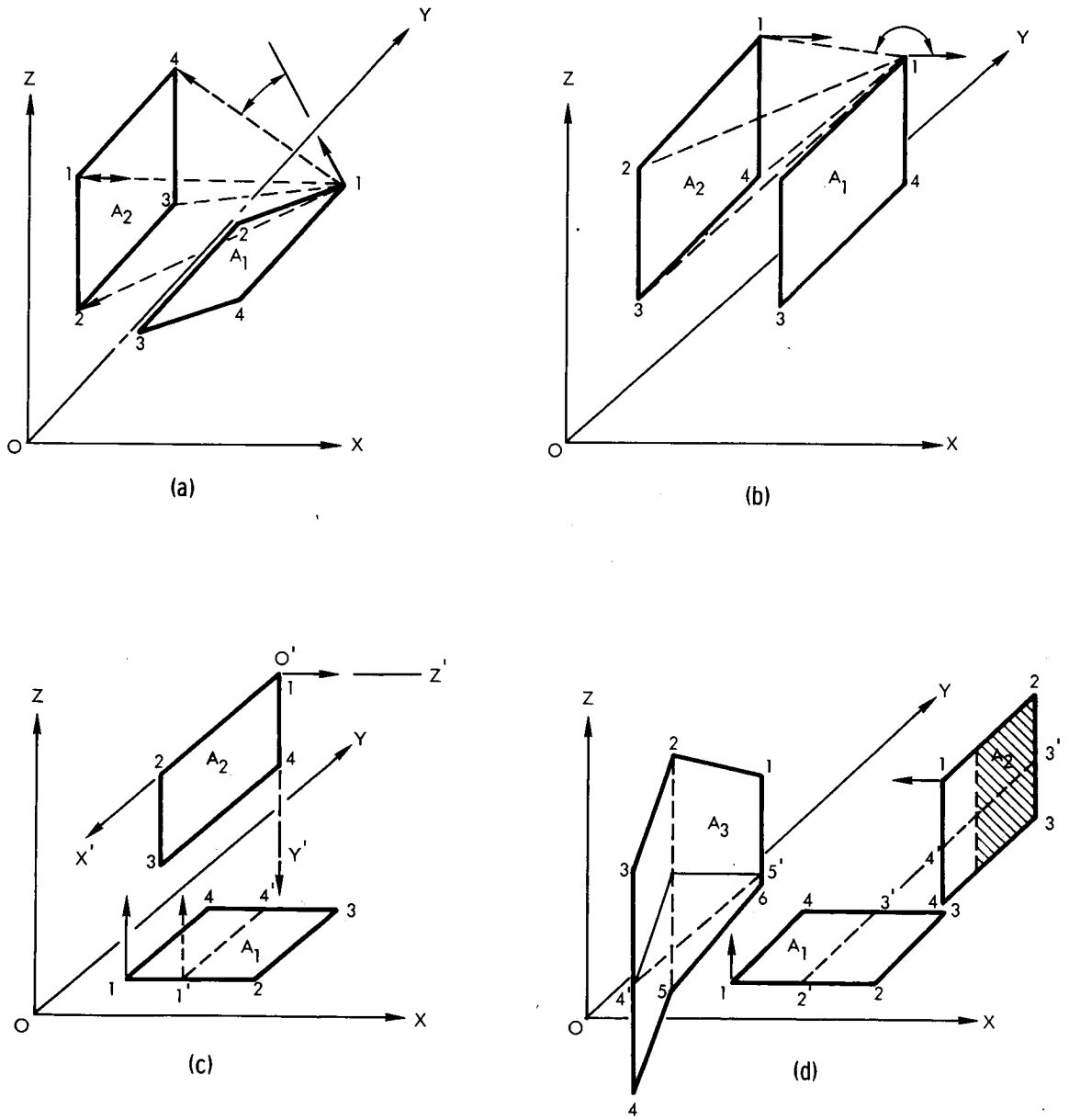

Figure 7. DOICU Surface Generator

Figure 7 (c) shows a surface A2 bisecting surface A1. In this case, some of the dot products from A2 and A1 are positive and some negative. In Figure 7 (d) both A1 and A2 are bisected. Nonplanar surface A3 was added to show how it would be bisected by A1. Surface A3 has no orientation vector and thus no test is made of the view from this surface. The vertical dashed line in A2 represents how the plane 1-2-5-6 in A3 might bisect A2. DOICU will not detect this condition. If the configuration factor c_{23} were required, DOICU would properly bisect A3. However, if the factor to the concave side only is desired, an error would result because part of A2 sees the convex side of A3. This represents one of the limitations of CONFAC I that is carried over to CONFAC II.

If a surface is bisected, DOICU reconstructs the surface data to exclude the area not seen by the other surface. If point 1 in the original surface is removed as a result, a new orientation vector is created over the new point 1 as shown in Figure 7 (c). Notice that in reconstructing A3 (Figure 7 (d)), DOICU created the new array 1, 2, 3, 4', 5'. This "surface" is identical to the actual surface seen by A1 insofar as factor computation from A1 is concerned.

The bisection of a surface is done in a simple manner, with the aid of the auxiliary transformation capability. For example, in Figure 7 (c), the coordinates of both surfaces are transformed so that A2 lies in the XY plane of the auxiliary (primed) coordinate system. Each point in A1 is tested, in numerical order, until a change in the sign of the z-coordinate occurs. The coordinates of the new points where the transition line segment crosses the x'y' plane (z' = 0) are obtained by computing x and y intercepts of traces projected on the x'z' and y'z' principal planes.

Subroutine MAP

The double integral in Equation (9) and its numerical counterpart in Equation (10) mathematically represent the volume under a surface defined by the configuration factor $c_{12} = f(X, Y)$. Subroutine MAP decides the location (x, y) from which each factor to surface 2 will be computed.

It is assumed that surface 1, being classed as a plane, is a plane surface throughout. The program insures only that the reference plane of surface 1 is in the xy plane of the final coordinate system. MAP will use the xy coordinates of all points, and assumes a value of 0 for all z coordinates. This procedure cannot properly map a nonplanar surface.

Subroutine MAP determines the maximum y coordinate and the minimum y coordinate from among the points defining surface 1 (Figure 8). The total

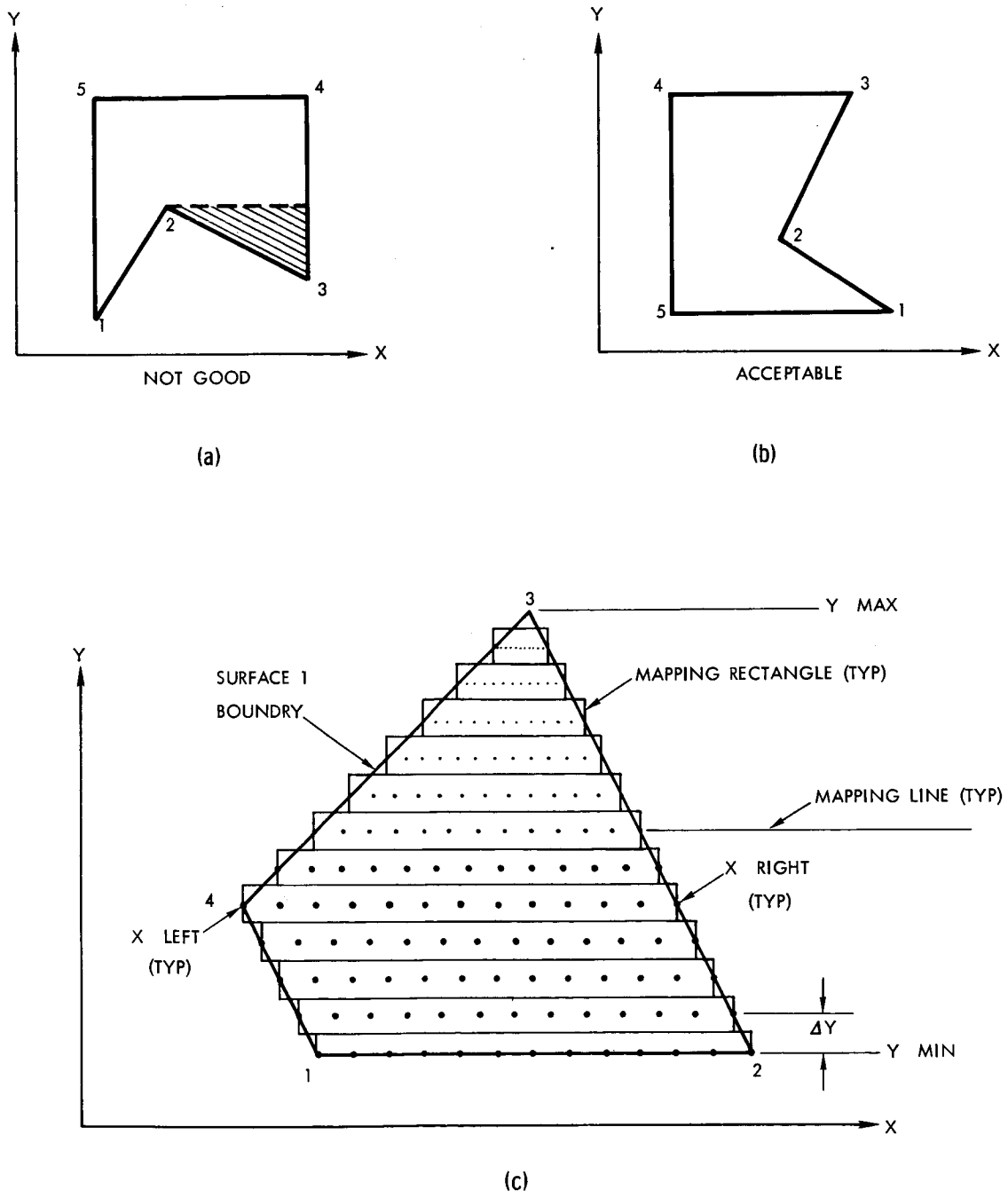

Figure 8. Mapping Procedure

vertical distance between y_{max} and y_{min} is divided into equal vertical increments, as specified by the run instructions. Then, horizontal lines are scribed across (parallel to the x-axis) the surface at each vertical increment position, including y_{max} and y_{min}. The point at which a horizontal line intersects the left (toward the negative x direction) boundary of surface 1 is termed "x-left" and the intersection on the right, "x-right". Each horizontal line segment thus created is termed a "mapping line". Each mapping line segment is also divided into an equal number of increments as specified by the run instructions. All mapping lines are divided into the same number of increments, not necessarily the same size of increment. Obviously, if surface 1 converges to a point instead of a line at y_{max} or y_{min} the horizontal increment is 0. A configuration factor is computed at each increment point along a mapping line, including x-left and x-right, which means the number of factors per line is one greater than the number of increments.

The number of increments is automatically set to 24 horizontal and 24 vertical by a title card, but can be separately specified by input data to 2, 6, 18, 24, 30, 36, 42, 48, 54, or 60. The details are discussed in Section IV.

A typical example of surface 1 mapping using a standard (24 x 24) increment is shown in Figure 8 (c). The mapping area is also computed by subroutine MAP; it is the sum of the rectangular areas formed by each mapping line. A measure of form factor accuracy is the degree with which the mapping area approximates the actual surface area.

Figure 8 (a) illustrates a surface 1 orientation that cannot be satisfactorily mapped because the crosshatched area is ignored. The program does not allow more than one left and one right intersection between a mapping line and the surface boundary; the program will detect this condition and print a diagnostic warning. This restriction may be avoided by rotating the surface sufficiently as shown in Figure 8 (b).

Subroutine SILFAC

This subroutine computes the silhouette of surface 2 which appears from the points selected on surface 1 by subroutine MAP, and then computes the configuration factor from this silhouette. After all configuration factors have been determined, the form factor is computed by numerical integration.

Surface data entered as class 4, 5, 6, 7 or 8 is processed by SILFAC. Class 7 data, a sphere, is processed in this routine, but the silhouette generator is not utilized; a closed form solution is used instead (see Appendix E of this volume).

Classes 4, 5 and 6 are processed by the silhouette generator in the simple mode; only those points given in connections data are analyzed to select the next point on the silhouette. Surfaces such as planes, cylinders, parallelepipeds, etc. may be processed in the simple mode.

Class 8, a multisurface, is the only class processed in the complex mode. One or more (limitations on data are given at the end of this section and in Section IV) surfaces may be processed as a multisurface. Processing in the complex mode is complicated because the computer must test all line segments in all surfaces (including the surface in which the segment appears) in order to select the next point forming the silhouette, or to compute the next point on the silhouette. This analysis is further complicated by ambiguities resulting from normal imprecision in input data and internal arithmetic round-off, necessitating the use of numerous time consuming tolerance tests. Consequently, a factor computation in the complex mode takes considerably longer than the simple mode.

If a surface is processed as simple when it should be complex, a wrong silhouette will be computed whenever a crossover (an intersection of two line segments) occurs. The configuration factor computed from that silhouette will be wrong.

It is possible to detect certain kinds of trouble in the silhouette generator from the detailed silhouette output which lists the points forming the silhouette. Normally, the silhouette will start at the lowest leftmost point in the z-unity plane perspective developed for the noted point in surface 1, and move progressively from point to point in a counterclockwise manner, keeping the perspective area to the left. When a crossover occurs, the point is computed and assigned the next highest number in the data array. For example, from point "D" in Figure 5, the silhouette derived in the complex mode would appear in the detailed silhouette output as "Line No., Point No., 1", 2", 9", 6", 5", 8", 10", 4", 1." However, if this problem were run as simple (both surfaces entered together as class 4) instead, surface S3 would be ignored because the crossover at point 9 would not be computed. The silhouette would appear normal, but actually be wrong, as follows:

Line No., Point., 1", 2", 3", 4", 1."

A bad silhouette can sometimes be detected by the presence of internal "looping." Normally, a silhouette is completed by a return to the starting point. However, if for some reason a wrong path is chosen, it may loop a polygon within the perspective. Looping is characterized by the repeated appearance of the same sequence of numbers. No internal pattern recognition is attempted; the only detection is visual examination of the detailed output.

If a silhouette does not converge, i.e., return to the starting point; a factor of 0 is assigned to that point and the program proceeds to the next point on surface 1. This 0 is integrated as usual with other computed factors; the resulting form factor will therefore be in error. The degree of error is determined by the number of zeros present and the incremental areas represented by each zero. If the error is deemed excessive, a reasonable adjustment may be made by estimating the factor from adjacent factors. The incremental FA product correction can then be made and the form factor adjusted as required.

The coordinates of the silhouette on the $z = 1$ plane are used directly for factor computation instead of the actual points on the surface in space. Because the z coordinate of each point is 1, the configuration factor equations for this special case can be simplified, and computing time reduced. SILFAC, therefore, contains its own equations for configuration factor computation and numerical integration across surface 1. The integration process is similar to the procedure given in subroutine FACTOR. Subroutine FACTOR has been retained from CONFAC I for factor computations not utilizing the silhouette generator.

Subroutine FACTOR

This subroutine computes configuration factors from each point on surface 1 selected by MAP to surface 2. The exchange coefficient is computed by numerical integration of configuration factors across surface 1, from which the form factor is finally derived as the area-weighted mean of all configuration factors.

Factors are computed for each point along each mapping line, moving from x-left to x-right, by translating the origin of the surface 2 coordinate system in x. The analysis and equations are organized for minimum computational time; constants at each loop level are computed once prior to loop entry. Because the usual output desired is only the form factor, configuration factors per se are not computed unless a detailed output is requested. A numerical integration of computed point function with respect to x is performed before proceeding to the next line. After all horizontal integrations are completed, these products are integrated with respect to y, and divided by the mapping area computed in subroutine MAP.

A standard 24 x 24 grid results in 625 configuration factors to be computed. The question naturally arises as to whether this many configuration factors are actually required. If the configuration factor changes very little across surface 1, then it is probably too many; but if there are sharp changes in the factor, and third place accuracy is desired, then it is probably sufficient. Contrary to expectations, a more sophisticated integration rule such as Simpson's or Weddle's is not as accurate as the

trapezoidal rule for standard increments if the factor function slope changes rapidly. Weddle's Rule was initially used, which explains why the program increment control is in groups of six (except the initial 2 which is not in CONFAC I). If the factor varies smoothly, a 6 x 6 Weddle Rule integration (49 factors) is probably as accurate as the standard 625 factors presently used by the trapezoidal rule. The time saved is appreciable when running many factors. If desired, Weddle's Rule may be inserted in the source deck and compiled with no other changes required.

The form factor computed by the above is from that part of surface 1 which "sees" surface 2. If surface 1 is bisected, then the computed factor must be reduced in proportion to the area reduction. This is required because the total active side of surface 1 entered in data is considered the radiant surface.

GENERAL RULES AND RESTRICTIONS

The following general rules and restrictions must be observed for normal program operation:

1. All data must be derived from right-handed rectangular coordinate systems.

2. Points 1, 2 and the last point in plane surface input data (class 1 and 4) must not form a straight line in space.

3. The active side of a plane or nonplanar surface is established by entering the boundary points in counterclockwise order, as they appear when facing the active side.

4. If the factor to a class 2 (nonplanar) surface is required, only the active surfaces should be seen from any point on surface 1, and they must also be seen from every point on surface 1.

5. All surfaces used as surface 2 which utilize the silhouette generator (classes 5, 6, 8, or 4 if included in class 8) should appear above the plane of surface 1, i.e., all z coordinates must be nonzero and positive, prior to factor computation. If they are zero or negative, a value of 0.05 will be assigned, and a diagnostic printed.

6. Detailed restrictions and limitations upon input data are given in Section III.

SECTION III. INPUT DATA

DATA SPECIFICATIONS AND SPECIFIC RESTRICTIONS

Input data consists of title cards, comments cards, externally (user) computed surface data, specification data used to create internally computed surface data, multisurface data, transformation data and factor request data. Title cards are discussed under Program Control.

Data type is classified by the use of an integer from 1 to 9 placed in column 1 of the data name card, followed by a 1 to 5 FORTRAN character name to provide data identity within each class. The classes of data are described below.

Surface and Transformation Data

Class 1 - Plane Polygon

The x, y, and z coordinates of each point defining the surface boundary are required. Only one side of a single plane surface can be made active i.e., may interchange radiant flux with another surface. The active side is established in the following manner: face or look at the desired active side, and select any point on the surface boundary as point number one. Proceeding in a counterclockwise direction about the boundary of the surface, select the remaining points in sequence. If this rule is followed, the surface will always be on the left when moving along the boundary. The active side may be reversed in run instructions by use of the "9R" pseudo-transformation.

The x, y, and z coordinates of each point are entered on the data cards in the above sequence, and each point is numbered internally according to its position in the data.

It is assumed that a class 1 surface is a plane surface. No internal check is made to verify this (in contrast to CONFAC I). If a substantially nonplanar surface is classed as a plane surface, serious errors in mapping could result if it is used as surface 1, or wrong factors could be computed if it is used as surface 2. See item 4, General Rules and Restrictions, Section II.

No point connections data are entered under class 1; the silhouette generator is not used except when entered under a class 8 entry. In this case, connections are generated by the program.

Class 2 - Nonplanar Surface

Two or more plane surfaces, not in the same plane, adjoining or connected, and entered as one package are termed a nonplanar surface.

A class 2 surface can be used as a surface 2 if the side of each facet selected as the active side, and only those sides, are seen from everywhere on the active side of surface 1. The counterclockwise order of data entry establishing the active side is also required as in class 1, but no orientation vector is generated.

Connections data comments are the same as given in the Class 1 discussion.

Class 3 - Internally Generated Plane Polygon, No Connections Data

The internal surface generator will compute the coordinates of each point defining a plane polygon, parallel to the xy plane, with an orientation vector erected over point 1 and directed along the +z axis. A detailed description of the internal surface generator is given in Section I.

The data required for a class 3 surface is:

No. of sides, $3 \leqq N \leqq 100$

x-axis radius

y-axis radius (if positive, the orientation vector is directed toward +z axis; if negative, toward -z axis)

x, y, and z coordinates to center of polygon

A class 3 surface is used in the same manner as a class 1 surface. The same rules and restrictions apply.

Class 4 - Plane Polygon with Connections Data and Class 5 - Nonplanar Polygon or Solid Surface with Connections Data

A class 4 surface is actually a class 1 surface with connections data added, making it possible for it to be processed with the silhouette generator. But, in general, no useful purpose is gained by the use of the silhouette generator to process a plane surface, unless it is combined with other surfaces. Therefore, a class 4 surface is processed as a class 1 surface, unless it is listed under a class 8 entry. However, the modifications currently incorporated allow entry of class 1 surfaces directly into class 8 multisurfaces.

A class 5 surface is always processed in the simple mode by SILFAC unless listed under a class 8 entry.

A maximum of 100 boundary points may be entered describing a class 4 or 5 surface. Up to four connecting points for each boundary point may be entered. If more than four connecting points are required, one may enter

more boundary data points having the same coordinates and connecting to each other, using the surplus (3) connections to satisfy the additional connections requirement.

Class 6 - Internally Generated Polygon or Polyhedron, Including Connections Data

A detailed description of the internal surface generator is given in Section I. A class 6 surface is always processed by SILFAC - in the simple mode if used directly, and complex mode if listed under class 8. The data required to create a class 6 surface are:

1. Number of cross sections

2. Number of cross sections divisions (sides)

3. Coordinates and generating radii of first cross section

4. Z-coordinate and generating radii of additional cross sections, if any.

Attention is directed to general restrictions 3, 4, and 5 in Section II.

Class 7 - Sphere

The radius and the x, y, and z coordinates of the sphere are required. A primary transformation of a sphere is pointless and therefore not permitted. Arbitrary orientation of both surface 1 and sphere is allowed. One peculiarity exists which differs from the usual treatment of bisected surfaces. If the plane of surface 1 bisects the sphere, the area of the spherical surface above the horizon of surface 1 will be computed. Now the sphere cannot bisect surface 1 in the usual sense, but it is possible that a bisected sphere may be partly or totally inside the boundaries of surface 1 - embedded in the surface. In this case, the program will merely assign a zero for the configuration factor when the viewpoint from surface 1 is inside the sphere. This zero will be integrated as usual with the other factors computed along each mapping line. No computation of the surface 1 area seeing the sphere is made, however, even though part of surface 1 is not seen by the sphere.

Class 8 - Multisurface

A multisurface is a group of individual surfaces which are effectively considered to be one continuous surface by the silhouette generator. This concept permits the computation of factors to surfaces which are "shadowed" by intervening surfaces. All surface data except spheres (class 7) may be entered into a multisurface.

If the coordinate data of a particular surface is to be transformed prior to assembly into the multisurface, the name of the transformation data is specified in the multisurface data entry. If the complete multisurface is to be transformed, the name of the transformation data is specified in the factor request. In this respect, class 8 data is processed in the same manner as other surface data.

Class 9 - Transformation Data

Transformation data consists of the coordinates of three points in a surface, not in a straight line, derived from the "new" position of a surface which has been moved in its coordinate system. One may, with equal validity, interpret the transformation to mean that the origin of the coordinate system is being moved to a different position, and the data are the coordinates of each point taken from the new origin. The three points selected need not be chosen or entered in any particular order, nor must the same points be used if more than one different primary transformation of the same surface is desired. The pseudo-transformation name "9R" is not entered in data, but only in factor requests.

Factor Requests

Factor requests specify, for each factor desired, the following:

1. The name of surface 1 data

2. The name of surface 2 data

3. The names of surface 1 and/or surface 2 transformation data

4. Whether a standard (minimum) or detailed printout mode is desired. The code "D" signifies that a detailed printout is desired. The code "N" signifies that a standard printout is desired. The code "blank" is a command to use the printout mode used for the prior factor request with the following exception. The program is initialized to the standard "N" mode before the first factor request is processed and by a title card.

5. The horizontal and/or vertical divisions to be used in mapping surface 1. The major divisions that can be used are 6, 12, 18, 24, 30, 36, 42, 48, 54 and 60, but these are specified in the factor request by the integers 1, 2, 3, 4, 5, 6, 7, 8, 9, and 10. The special division of 2 is specified by the integer 11. The presence of a blank field is interpreted in a similar manner as the output mode specification.

DATA DIMENSION RESTRICTIONS

1. A maximum of 100 boundary points (300 coordinates) for each surface entered as class 1, 2, 4, and 5, or assembled under a class 8 entry.

2. A maximum of 100 points, equivalent to 100 sides, generated by class 3 data.

3. For class 6 data, the number of sides plus one, times the number of cross sections, must not exceed 101 if planar, and 102 if nonplanar. The number of cross sections must not exceed 11.

4. The grand total of surfaces entered or generated by class 4, 5 and 6 must not exceed 10.

5. The grand total of surfaces entered or generated by classes 1, 2, 3, 4, 5 and 6 must not exceed 17.

6. The total number of class 7 data must not exceed 10.

7. The total number of class 8 data entries must not exceed 12. No more than 6 surfaces may be entered together as a multisurface.

8. The total number of class 9 data must not exceed 10.

PROGRAM CONTROL

The program deck setup is shown in Figure 36. Note the presence of the title card immediately following the $DATA and Variable Format. A title card must have a "T" or an "I" in column 1. The title card serves three purposes. Columns 2-72 may contain run identification data such as job title, user name, date, etc. Second, the presence of this card is a command to reinitialize data storage locations so that new data may be read into storage. This means, however that the old data is no longer available for factor computations unless reentered as new input data. Third, the "I" control character in column 1 signifies that a card image (columns 1-80) printout of all data up to and including the END card is desired, prior to data processing. If an "I" appears in column 1, the group of data for which a card image

printout is desired must be terminated by an END card. If an image printout is not desired, a "T" must appear in column 1, and an END card is not required (it will be ignored if present).

Actually, the program initializes all data locations for the first run whether a title card is present or not. However, the title card ("T" or "I" in column 1) is the only way to reinitialize data locations so that a new group of data and factor requests may be processed.

It appears desirable to have separate identification of the various factors computed, and a comments card has been provided for that purpose. The comments card has a "C" in column 1, and a comment may appear in columns 2 - 72. A comments card may be inserted between run instruction cards, and the line of comment given on the card will be printed below the title on all output thereafter, unless superseded by another comments card.

Comments output may be entirely suppressed by using another comments card containing blanks in columns 2 - 72.

FORMAT

All data may be entered on NAA FORTRAN Fixed 10 Decimal Data sheets. Each line represents 12 card columns with six lines per card, making a total of 72 card columns available for data entry. Columns 73 - 80 are used for card identification and/or numerical sequencing for sorting purposes.

Title Card

A title card is characterized by an alphabetical "T" or an "I" placed in column 1. Columns 2 - 72 available for job identification, as shown on Figure 9.

Comments Card

A comments card is characterized by an alphabetical "C" placed in column 1. Columns 2 - 72 are available for comments, as shown on Figure 9.

Surface and Transformation Data

All surface and transformation data is preceded by a name card uniquely identifying the data. A name consists of six FORTRAN characters (a computer "word") and always occupies the first six columns of the name card. The data class, an integer from 1 to 9 which is part of the name, must always be placed in column 1. The remainder of the name occupies

columns 2 - 6, and it is important to note that a blank space is considered a character and a part of the name. For example, the name 1S1 is not the same as 1_S1 or 1_ _ _S1.

The next word on the name card, columns 7 - 12 must be left blank. Decimal input data (all except class 8 and factor requests) may be entered in one of two modes. The first mode utilizes fixed input formating; data must be entered into specified fields on the card. This is the original and only mode used by FORTRAN II CONFAC II. However, FORTRAN IV features a powerful "free style" data entry technique called "NAMELIST." This mode of data entry permits consecutive entry of decimal data separated by commas. In most cases, the number of cards required to enter data using name is drastically reduced.

Because of present data management restrictions, the full flexibility of NAMELIST cannot be realized. One cannot, for example, modify surface data once entered by selective specification of the subscripts of the points to be changed in the array. Data once entered cannot be changed except by complete reentry after reinitialization with the title card. If reentry is attempted without reinitialization, the program will not process the data properly.

The use of the NAMELIST mode of data entry is commanded by the presence of any nonblank character in the third word (columns 13 - 18) of the name card. If the third word is blank, then the standard fixed-format mode described as follows will be used. The remaining words (columns 19 - 72) may be used for data identification.

The first column of each card used for a NAMELIST data entry must be left blank. The embedded blanks in the first word must appear identically as shown in the various formats illustrating data entry. No data or alphabetic characters may appear in the card sequence area (columns 73 - 80). Commas are used to separate items of data; there must be no embedded blanks in the item, but blanks may precede or follow each comma. Data may be continued on as many cards as required, but a data item cannot be entered partly on one card and partly on the next. A comma or a $ sign must follow the last item on a card; the comma is used if data to be continued, the $ sign if not.

The data identified by the name card must follow the name card. There are seven different formats which must be adhered to in entering data.

Class 1 and 2

The number of points to be entered describing the surface appears on the first line, Figure 10, followed by the x, y, and z coordinates of each point in sequence. The order in which the points are selected in the surface is explained in detail in Section III.

Class 3

The number of sides are entered on the first line, followed by the x, y, and z coordinates of the center of the internally generated polygon, the x-axis radius and the y-axis radius as shown in Figure 11.

Class 4 and 5

The total number of points describing the surface are entered on the first line as shown in Figure 12. The x, y, and z coordinates of the first point follow on the next three lines. The fourth line, representing 12 columns, is divided into four equal parts of 3 columns each. Each point in the surface connecting to point 1 is entered, up to a maximum of four. The pattern is repeated for the remaining points describing the surfaces.

If NAMELIST is used for data entry, four items must always be entered for connections to each point. Zeros are entered instead of blanks when less than four connections exist.

Class 6

The numbers of surface cross section boundary divisions (sides) is given on the first line as shown in Figure 13. The number of cross sections desired is specified on the second line, followed by the x, y, and z coordinates of the base (1st) cross section. The x-axis radius of the base cross section is given on the last line of the first card. The y-axis radius is entered on the first line of the second card, followed by, if more than one cross section is specified, the following, repeated for each cross section: The z coordinate of the cross section from the xy plane, the x-axis radius and the y axis.

Class 7

The sphere radius is entered on the first line, followed by the x, y, and z coordinates locating the center of the sphere as shown in Figure 14.

Class 8

The names of the surface(s) which are to be entered under this class (Figure 14) are entered in odd number words, i.e. first word on each line. The transformation data, if any, is entered to the right of the surface name. Six surface names and six transformation names may therefore be entered.

Class 9

The first point to be transformed is entered on the first line, followed by the x, y and z coordinates of the "new" position of the point as shown in

Figure 15. The second point to be transformed immediately follows on the fifth line followed by the x coordinate of the new position of the second point, thus completing the first card. The y and z coordinates of the new position of the second point are entered on the first two lines of the second card, followed by the number of the third point to be transformed and its new x, y, and z coordinates.

All of the numbers entered in the above data may be entered as fixed or floating point numbers except connections data, which must be entered as integers. If a decimal point is given (fractional numbers must have decimal points given), the floating number may be located anywhere in the field (line); if no decimal point is given, the number must be located to the extreme right of the field (no blanks to the right of the number). The foregoing applies as well to NAMELIST data entries, except that the field is defined as the space between two commas.

NAMELIST data entry may be used for all data classes except Class 8. The format shown in the upper part of Figure 16 is used for Classes 1, 2, 3, 6, 7, and 9; the format in the lower part of Figure 16 must be used for NAMELIST entry of Classes 4 and 5.

Factor Requests

Six FORTRAN words comprise a set of factor requests; two sets may be entered on one card as shown in Figure 17. The first set starts at column 1 and the second set starts at column 37. Two words (12 columns) comprise one line on the data sheet. The name of the surface 1 data is entered in the first word (columns 1 - 6) precisely as it appears in the first word of the surface data name card. The name of the surface 2 data is entered in the second word (columns 8 - 12) precisely as it appears in the first word of the surface data name card. If a primary transformation of surface 1 is desired, the desired transformation data name is entered in columns 13 - 18, otherwise, it is left blank. If a primary transformation of surface 2 is desired, the name of the transformation data is entered in the fourth word, columns 19 - 24. If a standard output is desired, the character "N" is entered instead of "D." If a blank is entered in both locations, the mode of output will be the same as the last factor request. The horizontal mapping division integer is entered in column 30 or 29 and 30. Similarly, the vertical mapping division integer is entered in column 36 or 35 and 36. If columns 29 and 30 are left blank, the horizontal mapping division used will be the same as the last factor request. If columns 35 and 36 are left blank, the vertical mapping division will be the same as the last factor request. The above format is repeated in the same manner, starting from column 37 on the fourth line, for the second set of factor requests on the card. There is no numerical limit to the number of factor requests which may be entered. The only requirement is, of course, that the data called for has been loaded in under the names used.

FORTRAN FIXED 10 DIGIT DECIMAL DATA

DECK NO. FORMAT PROGRAMMER TOUPS DATE 7/31/65 PAGE ____ of ____ JOB NO. ____

NUMBER	IDENTIFICATION	DESCRIPTION DO NOT KEY PUNCH
1 T		A TITLE CARD MUST HAVE A "T" OR
13		AN "I" IN COL. 1. COL. 2-72 ARE USED FOR
25		JOB IDENTIFICATION OR NAME, ETC.
37		
49	73 80	USE COLUMNS 73-80 FOR CARD ID
61		
I		
3		
25		
37		
49	73 80	
61		
1 C		A "C" IN COLUMN 1 FOR COMMENTS
13		IN ADDITION TO TITLE CARD
25		
37		
49	73 80	
61		
1		
13		
25		
37		
49	73 80	
61		

Figure 9. "T" and "C" Control Card Format

NORTH AMERICAN AVIATION, INC.

SPACE and INFORMATION SYSTEMS DIVISION

FORTRAN FIXED 10 DIGIT DECIMAL DATA

DECK NO. FORMAT PROGRAMMER K.A. TOUPS DATE 8/14/63 PAGE ____ of ____ JOB NO. ____

	NUMBER	IDENTIFICATION	DESCRIPTION DO NOT KEY PUNCH
1	N X X X X X		NAME OF CLASS 1 OR 2 SURFACE, COLS 1-6
13			CLASS 1 - PLAN POLYGON, USE "1" IN COL. 1
25			CLASS 2 - NONPLANAR POLYGON, USE "2" IN COL. 1
37			IMPORTANT: COLS. 7-18 MUST BE BLANK!
49		73 80	USE COLS. 19-72 FOR ADDITIONAL DESCRIPTION
61			USE COLS. 73-80 FOR CARD ID, ALL CARDS
1	N P		NO. OF POINTS DEFINING THE SURFACE
13	X 1		
25	Y 1		COORDINATES OF FIRST BOUNDARY POINT
37	Z 1		
49	X 2	73 80	
61	Y 2		COORDINATES OF SECOND BOUNDARY POINT
1	Z 2		
13	X 3		
25	Y 3		3RD
37	Z 3		
49		73 80	
61			ETC.
1			
13			NOTE: 1) ALL DATA MUST USE DECIMAL POINT,
25			EXCEPT INTEGERS WHICH MAY BE
37			ENTERED TO EXTREME RIGHT OF FIELD
49		73 80	2) DATA MUST BE DERIVED FROM RIGHT-
61			HANDED RECTANGULAR COORDINATE SYSTEM

Figure 10. Class 1 and Class 2 Surface Input Data Format

NORTH AMERICAN AVIATION, INC.
SPACE and INFORMATION SYSTEMS DIVISION

FORTRAN FIXED 10 DIGIT DECIMAL DATA

DECK NO. FORMAT PROGRAMMER K.A. TOUPS DATE 8/14/63 PAGE ____ of ____ JOB NO. ____

	NUMBER	IDENTIFICATION	DESCRIPTION DO NOT KEY PUNCH
1	3 X X X X X		NAME OF CLASS 3 SURFACE COLS 1-6
13			USE "3" IN COL. 1 TO CREATE AN
25			INTERNALLY GENERATED PLANE POLYGON
37			IMPORTANT: COLS. 7-18 MUST BE BLANK!
49		73 80	USE COLS. 19-72 FOR ADDITIONAL DESCRIPTION
61			USE COLS. 73-80 FOR CARD ID, ALL CARDS
1	N $		NO. OF POLYGON SIDES, ≧3
13	X		
25	Y		COORDINATES OF CENTER
37	Z		
49	X R	73 80	X - AXIS RADIUS
61	Y R		Y - AXIS RADIUS
1			
13			
25			
37			
49		73 80	
61			
1			NOTE: 1) ALL DATA MUST USE DECIMAL POINT,
13			EXCEPT INTEGERS WHICH MAY BE ENTERED
25			TO EXTREME RIGHT OF FIELD
37			2) SURFACE IS GENERATED IN A
49		73 80	RIGHT-HANDED RECTANGULAR COORDINATE
61			SYSTEM

Figure 11. Class 3 Surface Specifications Input Data Format

NORTH AMERICAN AVIATION, INC.

SPACE and INFORMATION SYSTEMS DIVISION

FORTRAN FIXED 10 DIGIT DECIMAL DATA

DECK NO. FORMAT PROGRAMMER TOUPS DATE 7/31/65 PAGE ____ of ____ JOB NO. ____

	NUMBER	IDENTIFICATION	DESCRIPTION DO NOT KEY PUNCH
1	N X X X X X		NAME OF CLASS 4 OR 5 SURFACE, COLS. 1-6
13			CLASS 4 - PLANE POLYGON, USE "4" IN COL. 1
25			CLASS 5 - NONPLANAR POLYGON OR SOLID, USE "5" IN COL 1
37			IMPORTANT: COLS. 7-18 MUST BE BLANK!
49		73 80	USE COLS 19-72 FOR ADDITIONAL DESCRIPTION
61			USE COLS 73-80 FOR CARD ID, ALL CARDS
1	N P		NO. OF POINTS DEFINING SURFACE
13	X 1		
25	Y 1		COORDINATES OF FIRST BOUNDARY POINT
37	Z 1		
49	N 1 N 2 N 3 N 4	73 80	POINTS CONNECTING TO FIRST POINT (≧4)
61	X 2		
1	Y 2		COORDINATES OF SECOND BOUNDARY POINT
13	Z 2		
25	N 1 N 2 N 3 N 4		POINTS CONNECTING TO SECOND POINT (≧4)
37			ETC IMPORTANT: ALL CONNECTING POINTS MUST BE
49		73 80	↓ ENTERED AS INTEGERS TO RIGHT
61			OF FIELD OF 4 COLS. AS SHOWN.
1			NOTE: 1) ALL DATA MUST USE DECIMAL POINT, EXCEPT
13			INTEGERS WHICH MAY BE ENTERED TO EXTREME
25			RIGHT OF FIELD (NOTE ABOVE EXCEPTION)
37			2) DATE MUST BE DERIVED FROM RIGHT-
49		73 80	HANDED RECTANGULAR COORDINATE SYSTEM
61			

Figure 12. Class 4 and Class 5 Surface Input Data Format

NORTH AMERICAN AVIATION, INC.
SPACE and INFORMATION SYSTEMS DIVISION

FORTRAN FIXED 10 DIGIT DECIMAL DATA

DECK NO. FORMAT PROGRAMMER K.A. TOUPS DATE 7/31/65 PAGE ____ of ____ JOB NO. ____

	NUMBER	IDENTIFICATION	DESCRIPTION DO NOT KEY PUNCH
1	6 X X X X X		NAME OF CLASS 6 SURFACE, COLS 1-6
13			USE "6" IN COL. 1 FOR AN INTERNALLY
25			GENERATED PLANE POLYGON OR SOLID, WITH CONNECTIONS DATA
37			IMPORTANT: COLS 7-18 MUST BE BLANK!
49		73 80	USE COLS 19-72 FOR ADDITIONAL DESCRIPTION
61			USE COLS 73-80 FOR CARD ID, ALL CARDS
1	N $		NO. OF POLYGON CROSS SECTION SIDES ≧3
13	M C		NO. OF CROSS SECTIONS DESIRED
25	X 1		
37	Y 1		COORDINATES OF FIRST CROSS SECTION CENTER
49	Z 1	73 80	
61	X R 1		X-AXIS RADIUS, FIRST CROSS SECTION
1	Y R 1		Y-AXIS RADIUS, FIRST CROSS SECTION
13	Z 2		HEIGHT (Z-COORD), SECOND CROSS SECTION (IF ANY)
25	X R 2		X-AXIS RADIUS, " " " " "
37	Y R 2		Y-AXIS RADIUS, " " " " "
49	↓	73 80	↓ THIRD " " " "
61	ETC		ETC " " " " "
1			" " " " "
13			NOTE: 1) ALL DATA MUST USE DECIMAL POINT, EXCEPT INTEGERS
25			WHICH MAY BE ENTERED TO EXTREME RIGHT OF FIELD
37			2) SURFACE IS GENERATED IN A RIGHT HANDED
49		73 80	RECTANGULAR COORDINATE SYSTEM
61			

Figure 13. Class 6 Surface Specifications Input Data Format

NORTH AMERICAN AVIATION, INC.
SPACE and INFORMATION SYSTEMS DIVISION

FORTRAN FIXED 10 DIGIT DECIMAL DATA

DECK NO. FORMAT PROGRAMMER K.A. TOUPS DATE 7/31/65 PAGE ____ of ____ JOB NO. ____

NUMBER	IDENTIFICATION	DESCRIPTION DO NOT KEY PUNCH
7 X X X X X		NAME OF CLASS 7 SURFACE, COLS 1-6
		USE "7" IN COL 1 FOR A SPHERE
		IMPORTANT: COLS. 7-18 MUST BE BLANK!
	73 80	USE COLS 19-72 FOR ADDITIONAL DESCRIPTION
		USE COLS 73-80 FOR CARD ID, ALL CARDS
R A		RADIUS OF SPHERE
X		
Y		COORDINATES OF CENTER
Z		
	73 80	
	73 80	
		NOTE: 1) ALL DATA MUST USE DECIMAL POINT EXCEPT
		INTEGERS WHICH MAY BE ENTERED TO
		EXTREME RIGHT OF FIELD
		2) DATA MUST BE DERIVED FROM RIGHT-
	73 80	HANDED RECTANGULAR COORDINATE SYSTEM

FORTRAN FIXED 10 DIGIT DECIMAL DATA

DECK NO. FORMAT PROGRAMMER K.A. TOUPS DATE 7/31/65 PAGE ____ of ____ JOB NO. ____

NUMBER	IDENTIFICATION	DESCRIPTION DO NOT KEY PUNCH
8 X X X X X		NAME OF MULTISURFACE, COLUMNS 1-6
		USE "8" IN COLUMN 1 FOR THIS CLASS.
		IMPORTANT: COLUMSN 7-18 MUST BE BLANK!
	73 80	USE COLUMNS 19-72 FOR ADDITIONAL DESCRIPTION.
		USE COLUMNS 72-80 FOR CARD ID
1 S T	1 S T	ENTER SURFACE NAMES IN THIS COLUMN OF WORDS
2 N D	2 N D	
		ENTER TRANSFORMATION DATA IN
		THIS COLUMN OF WORDS.
	73 80	
		NOTE: NO NAMELIST ENTRY ALLOWED
		FOR CLASS 8!
	73 80	
	73 80	

Figure 14. Class 7, Sphere and Class 8 Multisurface Specifications Input Data Format

FORTRAN FIXED 10 DIGIT DECIMAL DATA

DECK NO. FORMAT PROGRAMMER K.A. TOUPS DATE 7/31/65 PAGE ____ of ____ JOB NO. ____

	NUMBER	IDENTIFICATION	DESCRIPTION DO NOT KEY PUNCH
1	9 X X X X X		NAME OF CLASS 9 DATA, COLS 1-6
13			USE "9" IN COL. 1 FOR TRANSFORMATION
25			DATA
37			IMPORTANT: COLS 7-18 MUST BE BLANK!
49		73 80	USE COLS. 19-72 FOR ADDITIONAL DESCRIPTION
61			USE COLS. 73-80 FOR CARD ID, ALL CARDS.
1	N 1		FIRST POINT TO BE TRANSFORMED
13	X 1		
25	Y 1		COORDINATES OF FIRST POINT FROM
37	Z 1		"NEW" ORIGIN
49	N 2	73 80	SECOND POINT TO BE TRANSFORMED
61	X 2		
1	Y 2		COORDINATES OF SECOND POINT FROM "NEW" ORIGIN
13	Z 2		
25	N 3		THIRD POINT, ETC
37	X 3		
49	Y 3	73 80	COORDINATES, ETC
61	Z 3		
1			
13			NOTE: 1) ALL DATA MUST USE DECIMAL POINT EXCEPT
25			INTEGERS WHICH MAY BE ENTERED TO
37			EXTREME RIGHT OF FIELD
49		73 80	2) DATA MUST BE DERIVED FROM A RIGHT-HANDED
61			RECTANGULAR COORDINATE SYSTEM

Figure 15. Class 9 Transformation Date Input Data Format

NORTH AMERICAN AVIATION, INC.

SPACE and INFORMATION SYSTEMS DIVISION

FORTRAN FIXED 10 DIGIT DECIMAL DATA

DECK NO. FORMAT PROGRAMMER K.A. TOUPS DATE 7/31/65 PAGE ____ of ____ JOB NO. ____

	NUMBER	IDENTIFICATION	DESCRIPTION DO NOT KEY PUNCH
1	N X X X X X		NAME OF DATA
13	N A M E L I $ T		ANY NONBLANK CHARACTER IN
25			THE THIRD WORD (COLS. 13-18).
37			THEY DO NOT HAVE TO BE ALL
49		73 80	NONBLANK AS SHOWN
61			
1	$ D C = A , B , C ,		THIS FIRST WORD MUST APPEAR
13	D , E , F , G ,		IDENTICALLY AS SHOWN FOR ALL
25	H , T , J ,		NAMELIST ENTRIES.
37			
49		73 80	NO DATA AFTER COLUMN 72
61			NO ALPHABETICAL CHARACTERS IN COLUMNS 73-80
1	K , L , M $		COLUMN 1 IS LEFT BLANK ON FOLLOWING CARDS. THE LAST
13			ITEM ON THE PRIOR CARD IS
25			TERMINATED WITH A COMMA.
37			
49		73 80	
61			
1			
13			TYPICAL FOR CLASSES (1, 2, 3, 6, 7, 9)
25			DECIMAL DATA ENTRIES ONLY
37			
49		73 80	
61			

FORTRAN FIXED 10 DIGIT DECIMAL DATA

DECK NO. ____ PROGRAMMER ____ DATE ____ PAGE ____ of ____ JOB NO. ____

	NUMBER	IDENTIFICATION	DESCRIPTION DO NOT KEY PUNCH
1	N X X X X X		CLASS 4 OR 5 NAME
13	N A M E L I $ T		NAMELIST ENTRY
25			
37			
49		73 80	
61			
1	$ D C = N P , X 1 ,		NOTE: FOUR ITEMS MUST BE
13	Y 1 , Z 1 , C 1 1 , C 2		ENTERED AS CONNECTIONS DATA
25	1 , C 3 1 , C 4 1 , X 2		FOLLOWING THE COORDINATES OF
37	, Y 2 , Z 2 , C 1 2 , C		THE POINT. FOR EXAMPLE, IF
49	2 2 , C 3 2 , C 4 2 , X	73 80	ONLY 2 CONNECTORS TO A
61	3 , Y 3 , Z 3 , C 1 3 ,		POINT EXIST, 2 ZEROS MUST
1	C 2 3 , C 3 3 , C 4 3		BE ENTERED FOLLOWING THE
13	, ETC		TWO CONNECTIONS
25			
37	X N , Y N , Z N , C 1 N		
49	, C 2 N , C 3 N , C 4 N	73 80	
61	$		
1			
13			
25			
37			
49		73 80	
61			

Figure 16. Input Data Format, NAMELIST Mode

FORTRAN FIXED 10 DIGIT DECIMAL DATA

DECK NO. FORMAT PROGRAMMER K.A. TOUPS DATE 7/31/65 PAGE ____ of ____ JOB NO. ____

NUMBER	IDENTIFICATION	DESCRIPTION DO NOT KEY PUNCH
		NAME OF SURFACE 1
		NAME OF SURFACE 1 TRANSFORMATION DATA, IF ANY
		NAME OF SURFACE 2
		NAME OF SURFACE 2 TRANSFORMATION DATA, IF ANY
	73 80	
① ② ③ ④ ⑤ H H ⑥ V V		1ST FACTOR REQUEST ON CARD
	73 80	2ND FACTOR REQUEST ON CARD (FORMATING IDENTICAL WITH 1ST SET)
		INSERT CODE INTEGER FOR SURFACE 1 VERTICAL DIVISION
		" " " " " " HORIZONTAL "
		INSERT "D" IN EITHER SPOT FOR DETAILED OUTPUT
		INSERT "N" IN EITHER SPOT FOR STANDARD OUTPUT
	73 80	A BLANK CODE MEANS REPEAT SPECIFICATIONS GIVEN FOR LAST REQUEST
		NOTE: EITHER HALF OF THE CARD MAY BE LEFT BLANK, IF DESIRED
	73 80	

Figure 17. Factor Request Input Data Format

SECTION IV. PROGRAM OUTPUT

Input data is processed and printed out for programmer verification prior to its use in factor computations. The orientation vector head end is also printed out for all plane surfaces, so that the "active" side used by the program is clearly shown. Class 3 and 6 specifications as read in are printed, along with the surface data generated by the specifications. If an "I" was placed in column 1 of the title card, an image of each card will be printed.

A standard "minimum" output consists of the following:

1. Run number
2. Factor request data
3. The computed form factors from surface 1 to surface 2
4. The surface 1 mapping area
5. The exchange coefficient (fA product)
6. The total area of surface 1
7. If surface 1 is bisected, the area seen by surface 2
8. The total area of surface 2, if surface 2 area can be computed
9. If surface 2 is bisected, the area seen by surface 1, if that area can be computed.
10. The form factor from surface 2 to surface 1, if surface 2 area is known. One must be cautious in using this data when surface 1 area is large compared to surface 2 unless very fine mapping increments are used.

If a detailed output is requested, the minimum output plus the following is printed:

1. The final coordinates of surface 1 and surface 2 prior to computation of configuration factors.
2. The x-left and x-right coordinates for each y division of surface 1 mapping, including horizontal and vertical divisions used.

3. Each configuration factor computed. The output is given in groups of factors easily identified because the last factor in a group occupies a line by itself. Each group contains the configuration factors computed on a mapping line. The first factor in the group is that computed at x-left and the last factor in the group is that computed at x-right. The first group represents the first mapping line, the second group the second mapping line, etc.

4. If the silhouette generator was used, the silhouette computed for points selected on each mapping line is printed out. The first numeral given is the mapping line, the second is the point on the mapping line, moving from x-left to x-right. The numbers following represent the silhouette.

SECTION V. REFERENCES

1. Hamilton, D.C. and W.R. Morgan. Radiant-Interchange Configuration Factors. National Advisory Committee for Aeronautics. NACA TN-2836 (1952).

2. Sokolnikoff, I.D. and R.M. Redheffer. Mathematics of Physics and Modern Engineering. New York: McGraw-Hill Book Company, Inc. (1958).

3. Moon, Parry. The Scientific Basis of Illuminating Engineering. New York: Dover Publications, Inc. (1961), pp. 312-318.

4. O'Brien, P.F. "Pleijel's Globoscope for Lighting Design," Illuminating Engineering, Vol. LVIII, No. 3 (3 March 1963).

5. Toups, Kempton A. A General Computer Program for the Determination of Radiant-Interchange Configuration Factors. NAA S&ID, SID 62-393, ASD Technical Note ASD-TN-61-101 (DDC No. 403027) (March 1963).

6. Toups, Kempton A. "CONFAC II, A General Computer Program for the Determination of Radiant-Interchange Configuration and Form Factors" NAA, SID 63-1397, Air Force FDL-TDR-64-43 (DDC) January 1964.

APPENDIX A. SAMPLE PROBLEMS

A number of sample problems have been devised to illustrate the capabilities and limitations of CONFAC II. The examples are arranged roughly in order of complexity, beginning with simple plane surfaces and concluding with a complicated "intervening surface" problem involving plane and solid surfaces.

The surface configurations upon which the example problems are based are shown in accompanying illustrations. Each illustration is conveniently grouped separately with the problem description pertaining to the surfaces shown in the illustration, along with the input data sheets, factor request data program output, and a short discussion.

SAMPLE PROBLEM GROUP A

The geometry of this group is shown in Figure 18; the data sheets are shown in Figure 19 and the results are presented in Figure 20. The standard and namelist modes of data entry are demonstrated. Note the card image printout produced by the "I" card. The END card must be used in conjunction with an "I" card; the END card is not required if a "T" card is used for a title card.

Problem 1A

In Figure 18 (A1), the factor between the floor of a cubical room (1FLOOR) and an adjacent wall (1WALL) is computed, using standard horizontal and vertical mapping divisions (24 x 24) on surface 1. A detailed output is requested and standard data input mode is used.

Note that because no primary or auxiliary transformation occurred, the final coordinate system is the same as the input data (unprimed) coordinate system. The first mapping line starts at the origin and extends to point 1 in 1FLOOR.

Problem 2A

In Figure 18 (A1), any plane surface may be used as surface 1 providing it has been properly entered in data prior to the factor request. To demonstrate, the wall (1WALL) now acts as surface 1, and the factor to the floor (1FLOOR) is requested.

Note that surface 1WALL is not in the xy plane of its input (unprimed) coordinate system. The program, therefore, had to perform an auxiliary transformation to both surfaces to the primed system shown, prior to factor computation, to get surface 1 in the xy plane.

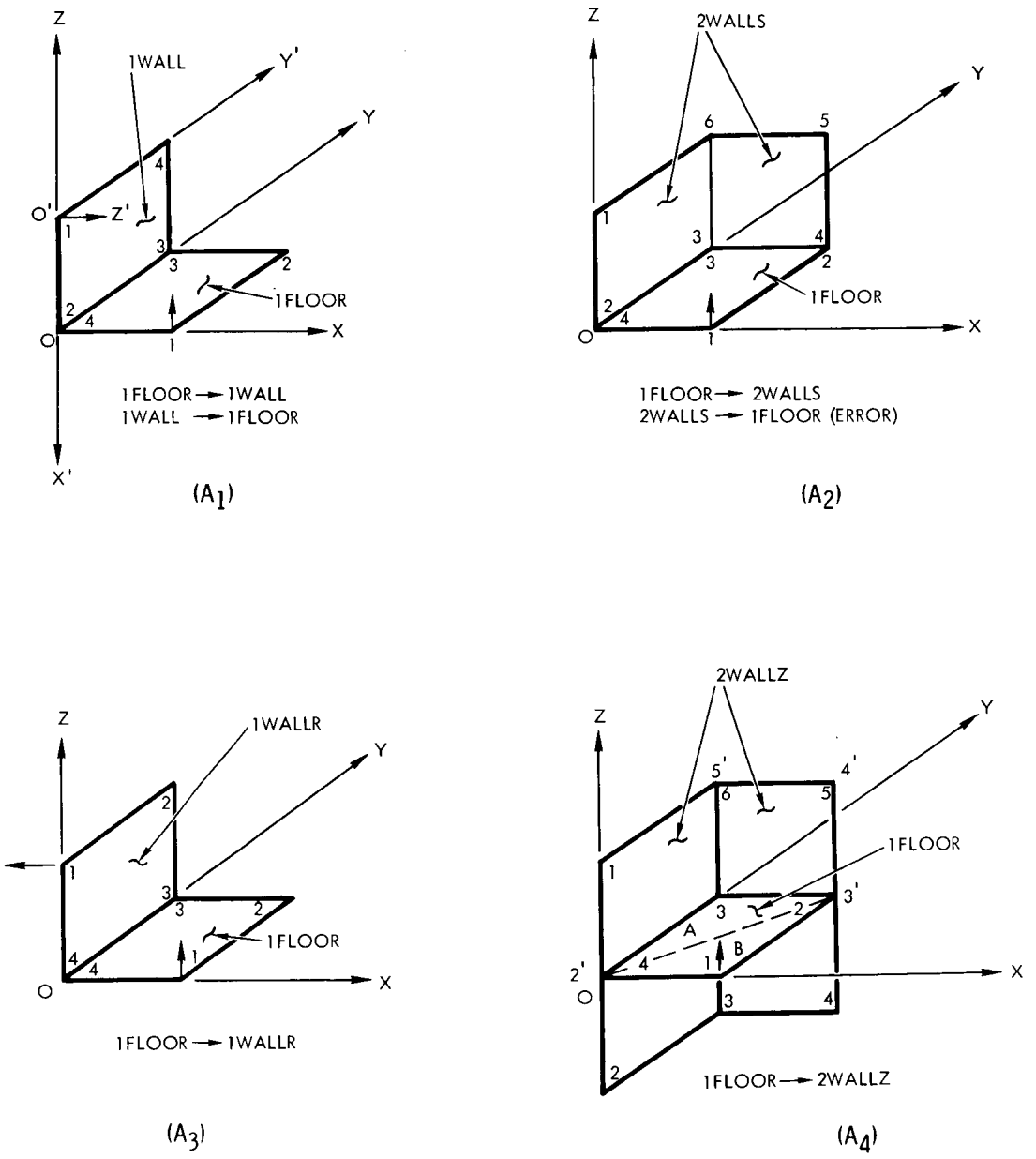

Figure 18. Group A Sample Problems Geometry

Problem 3A

In Figure 18 (A2), the factor from the floor (1FLOOR) to two adjacent walls taken together (2WALLS) is requested. This is a valid request because the boundary data describing 2WALLS form a valid silhouette of 2WALLS from any point on 1FLOOR. The factor should be twice that to one wall alone.

Problem 4A

The program connot validly compute the factor from a nonplanar surface. A class 2 surface is assumed nonplanar. The factor from 2WALLS to 1FLOOR is requested in order to elicit the diagnostic, warning the user of this error.

The program does not test the surface, as in CONFAC I. If a nonplanar surface is erroneously entered as a class 1 surface, it will not be rejected if used as surface 1; the responsibility lies with the user to ensure that surface 1 is planar.

Problem 5A

In Figure 18 (A3), the necessity for proper order in data entry is emphasized. The wall data are deliberately entered in a clockwise direction (1WALLR) looking at the active surface, instead of counterclockwise. Hence, the orientation vector points in the wrong direction. The factor from 1FLOOR to 1WALLR is requested in order to elicit the diagnostic which alerts the user to a possible error.

Problem 6A

In Figure 18 (A4), CONFAC II illustrates the capability of bisecting a nonplanar (class 2) surface. The factor from 1FLOOR to 2WALLZ is requested to demonstrate this capability.

Subroutine DOICU bisected 2WALLZ at the XY plane, and reconstructed the surface by eliminating points 2, 3, and 4, as shown, and creating new points 2', 3', 4' and 5'. The dashed line 2' 3' divides surface 1 (1FLOOR) into triangular parts, designated A and B. The view of the reconstructed 2WALLZ from anywhere in area B reflects a valid silhouette in the proper counterclockwise order. When reconstructed 2 WALLZ is viewed from area A, the points still form a valid silhouette, but the order is reversed. This means the computed configuration factor will be to the hemispherical space not occupied by 2WALLZ, and will be negative. So, subroutine FACTOR subtracts this factor from 1.0 to yield the correct factor to 2WALLZ.

Problem 7A

The use of the pseudo-transform "9R" is demonstrated by applying it to the 1WALLR data to cause the orientation of the surface to be reversed prior to factor computation. A standard output is requested.

Problem 8A

The "GROUPRUN" pseudo-factor request is entered to demonstrate this new capability.

FORTRAN FIXED 10 DIGIT DECIMAL DATA

DECK NO. GROUP A PROGRAMMER K.A. TOUPS DATE 7/31/65 PAGE 1 of 28 JOB NO. 2699-40

	NUMBER	IDENTIFICATION	DESCRIPTION DO NOT KEY PUNCH
1	1 NAA CΦNFAC		
13	1 1 REPΦRT $A		
25	MPLE PRΦBLEM		
37	S GRΦUP A		
49	K.A.TΦUP$,7/	73 80	
61	31/65	101	
1	1 FLΦΦR		
13			
25	1 X1 $QUARE		
37			
49		73 80	
61		102	
1	4.0		STANDARD DATA ENTRY MODE (SEE FIGURE 10)
13	1.0		
25	0.0		
37	0.0		
49	1.0	73 80	
61	1.0	103	
1	0.0		
13	0.0		
25	1.0		
37	0.0		
49	0.0	73 80	
61	0.0	104	

Figure 19. Group A Sample Problems Input Data Code Sheets (Sheet 1 of 5)

NORTH AMERICAN AVIATION, INC.

SPACE and INFORMATION SYSTEMS DIVISION

FORTRAN FIXED 10 DIGIT DECIMAL DATA

DECK NO. GROUP A PROGRAMMER K.A. TOUPS DATE 7/31/65 PAGE 2 of 28 JOB NO. 2699-40

	NUMBER	IDENTIFICATION	DESCRIPTION DO NOT KEY PUNCH
1	0 . 0		
13			
25			
37			
49		73 80	
61		1 0 5	
1	1 W A L L		
13	N A M E L I $ T		
25	1 X 1 $ Q U A R E T		
37	Φ U C H I N G 1 F L Φ		
49	Φ R	73 80	
61		1 0 6	
1	$ D C = 4 , 0 , 0 ,		NAMELIST DATA ENTRY MODE (SEE FIGURE 16)
13	1 , 0 , 0 , 0 , 0 , 1 ,		
25	0 , 0 , 1 , 1 $		
37			
49		73 80	
61		1 0 7	
1	1 W A L L R		
13	N		
25	$ A M E A $ 1 W A L		
37	L B U T Φ R D E R		
49	Φ F E N T R Y R E V	73 80	
61	E R $ E D	1 0 8	

Figure 19. Group A Sample Problems Input Data Code Sheets (Sheet 2 of 5)

NORTH AMERICAN AVIATION, INC.

SPACE and INFORMATION SYSTEMS DIVISION

FORTRAN FIXED 10 DIGIT DECIMAL DATA

DECK NO. GROUP A PROGRAMMER K.A. TOUPS DATE 7/31/65 PAGE 3 of 28 JOB NO. 2699-40

NUMBER	IDENTIFICATION	DESCRIPTION DO NOT KEY PUNCH
$DC=4,0,0,		
1,0,1,1,0,1,		
0,0,0,0$		
	73 80	
	109	
2WALL$		
N		
$IDE AND BAC		
K WALL ENTER		
ED A$ ONE $U	73 80	
RFACE	110	
$DC=6,0,0,		
1,0,0,0,0,1,		
0,1,1,0,1,1,		
1,0,1,1$		
	73 80	
	111	
2WALLZ		
N		
2WALLS EXTEN		
DED BELØW $U		
RFACE ØF 1FL	73 80	
ØØR	112	

Figure 19. Group A Sample Problems Input Data Code Sheets (Sheet 3 of 5)

NORTH AMERICAN AVIATION, INC.
SPACE and INFORMATION SYSTEMS DIVISION

FORTRAN FIXED 10 DIGIT DECIMAL DATA

DECK NO. GROUP A PROGRAMMER K.A. TOUPS DATE 7/31/65 PAGE 4 of 28 JOB NO. 2699-40

NUMBER	IDENTIFICATION	DESCRIPTION DO NOT KEY PUNCH
$D C=6,0,0,		
1,0,0,-1,0,1		
,-1,1,1,-1,1		
,1,1,0,1,1$		
	73 80	
	113	
1FLØØR1WALL		PROBLEM 1A
D		
1WALL 1FLØØR		PROBLEM 2A
	73 80	
	114	
1FLØØR2WALL$		PROBLEM 3A
2WALL$1FLØØR		PROBLEM 4A
	73 80	
	115	
1FLØØR1WALLR		PROBLEM 5A
1FLØØR2WALLZ		PROBLEM 6A
	73 80	
	116	

Figure 19. Group A Sample Problems Input Data Code Sheets (Sheet 4 of 5)

NORTH AMERICAN AVIATION, INC.
SPACE and INFORMATION SYSTEMS DIVISION

FORTRAN FIXED 10 DIGIT DECIMAL DATA

DECK NO. GROUP A PROGRAMMER K.A. TOUPS DATE 7/31/65 PAGE 5 of 28 JOB NO. 2699-40

	NUMBER	IDENTIFICATION	DESCRIPTION DO NOT KEY PUNCH
1	1 F L Φ Φ R 1 W A L L R		PROBLEM 7A
13	9 R		
25	N		
37			
49		73 80	
61		1 1 7	
1	G R Φ U P R U N		PROBLEM 8A
13			
25			
37			
49		73 80	
61		1 1 8	
1	E N D		END CARD IS REQUIRED ONLY
13			IF THE "1" TITLE CARD IS USED.
25			
37			
49		73 80	
61		1 1 9	
1			
13			
25			
37			
49		73 80	
61			

Figure 19. Group A Sample Problems Input Data Code Sheets (Sheet 5 of 5)

NORTH AMERICAN AVIATION, INC.

SPACE and INFORMATION SYSTEMS DIVISION

NAA SPACE AND INFØRMATIØN SYSTEMS DIVISIØN
RADIANT-INTERCHANGE CØNFIGURATIØN FACTØR PRØGRAM

C Ø N F A C I I

THE FØLLØWING ARE THE CARD IMAGES REQUESTED

```
INAA CØNFAC II REPØRT SAMPLE PRØBLEMS GRØUP A   K.A.TØUPS,7/31/65        C0000101
1FLØØR                  1X1 SQUARE                                        00000102
4.0         1.0         0.0         0.0         1.0         1.0          C0000103
0.0         0.0         1.0         0.0         0.0         0.0          00000104
0.0                                                                       00000105
1WALL       NAMELIST    1X1 SQUARE TØUCHING 1FLØØR                        C0000106
 $D C=4,0,0,1,0,0,0,0,1,0,0,1,1$                                          C0000107
1WALLR      N           SAME AS 1WALL BUT ØRDER ØF ENTRY REVERSED         00000108
 $D C=4,0,0,1,0,1,1,0,1,0,0,0,0$                                          C0000109
2WALLS      N           SIDE AND BACK WALL ENTERED AS ØNE SURFACE         C0000110
 $D C=6,0,0,1,0,0,0,0,1,0,1,1,0,1,1,1,0,1,1$                              00000111
2WALLZ      N           2WALLS EXTENDED BELØW SURFACE ØF 1FLØØR           C0000112
 $D C=6,0,0,1,0,0,-1,0,1,-1,1,1,-1,1,1,1,0,1,1$                           00000113
1FLØØR1WALL             D           1WALL 1FLØØR                          00000114
1FLØØR2WALLS                        2WALLS1FLØØR                          00000115
1FLØØR1WALLR                        1FLØØR2WALLZ                          C0000116
1FLØØR1WALLR      9R    N                                                 00000117
GRØUPRUN                                                                  00000118
END                                                                       C0000119
```

Figure 20. Group A Sample Problems Program Results (Sheet 1 of 37)

```
                    NAA SPACE AND INFORMATION SYSTEMS DIVISION
                RADIANT-INTERCHANGE CONFIGURATION FACTOR PROGRAM

                                C O N F A C   I I

          NAA CONFAC II REPORT SAMPLE PROBLEMS GROUP A   K.A.TOUPS,7/31/65

                                I N P U T   D A T A


***** DATA NAME- *1FLOOR      *              1X1 SQUARE

POINT       X              Y              Z            POINT       X              Y              Z
      0.1000000E 01 -0.0000000E-38  0.1000000E 01---(INTERNALLY GENERATED ORIENTATION VECTOR)
   1  0.1000000E 01  0.0000000E-38  0.0000000E-38       2   0.1000000E 01  0.1000000E 01  0.0000000E-38
   3  0.0000000E-38  0.1000000E 01  0.0000000E-38       4   0.0000000E-38  0.0000000E-38  0.0000000E-38


***** DATA NAME- *1WALL       * NAMELIST    1X1 SQUARE TOUCHING 1FLOOR

POINT       X              Y              Z            POINT       X              Y              Z
      0.1000000E 01 -0.0000000E-38  0.1000000E 01---(INTERNALLY GENERATED ORIENTATION VECTOR)
   1  0.0000000E-38  0.0000000E-38  0.1000000E 01       2   0.0000000E-38  0.0000000E-38  0.0000000E-38
   3  0.0000000E-38  0.1000000E 01  0.0000000E-38       4   0.0000000E-38  0.1000000E 01  0.1000000E 01


***** DATA NAME- *1WALLR      * N            SAME AS 1WALL BUT ORDER OF ENTRY REVERSED

POINT       X              Y              Z            POINT       X              Y              Z
     -0.1000000E 01  0.0000000E-38  0.1000000E 01---(INTERNALLY GENERATED ORIENTATION VECTOR)
   1  0.0000000E-38  0.0000000E-38  0.1000000E 01       2   0.0000000E-38  0.1000000E 01  0.1000000E 01
   3  0.0000000E-38  0.1000000E 01  0.0000000E-38       4   0.0000000E-38  0.0000000E-38  0.0000000E-38


***** DATA NAME- *2WALLS      * N            SIDE AND BACK WALL ENTERED AS ONE SURFACE

POINT       X              Y              Z            POINT       X              Y              Z
   1  0.0000000E-38  0.0000000E-38  0.1000000E 01       2   0.0000000E-38  0.0000000E-38  0.0000000E-38
```

Figure 20. Group A Sample Problems Program Results (Sheet 2 of 37)

```
   3   0.0000000E-38  0.1000000E 01  0.0000000E-38      4   0.1000000E 01  0.1000000E 01  0.0000000E-38
   5   0.1000000E 01  0.1000000E 01  0.1000000E 01      6   0.0000000E-38  0.1000000E 01  0.1000000E 01

***** DATA NAME- *2WALLZ      * N          2WALLS EXTENDED BELØW SURFACE ØF 1FLØØR

PØINT        X              Y              Z          PØINT        X              Y              Z
   1   0.0000000E-38  0.0000000E-38  0.1000000E 01      2   0.0000000E-38  0.0000000E-38 -0.1000000E 01
   3   0.0000000E-38  0.1000000E 01 -0.1000000E 01      4   0.1000000E 01  0.1000000E 01 -0.1000000E 01
   5   0.1000000E 01  0.1000000E 01  0.1000000E 01      6   0.0000000E-38  0.1000000E 01  0.1000000E 01
```

Figure 20. Group A Sample Problems Program Results (Sheet 3 of 37)

```
NAA CONFAC II REPORT SAMPLE PROBLEMS GROUP A   K.A.TAUPS,7/31/65

RUN NO.   1   DATA USED FOR THIS RUN- *1FLOOR*1WALL *
                                      *      *      *
                                      *D     *      *

THE FORM FACTOR FROM SURFACE *1FLOOR      * TO SURFACE *1WALL       * = 0.19996

THE EXCHANGE COEFFICIENT (FA)=   0.19996E 00 SQ UNITS

                THE MAPPING AREA = 0.1000000E 01 SQ UNITS

THE AREA OF SURFACE *1FLOOR      * = 0.1000000E 01 SQ UNITS.

THE AREA OF SURFACE *1WALL       * = 0.1000000E 01 SQ UNITS.

THE FORM FACTOR FROM SURFACE *1WALL       * TO SURFACE *1FLOOR      * = 0.19996

THE FOLLOWING ARE THE (FINAL) SURFACE COORDINATES USED FOR THE FACTOR COMPUTATION-


***** DATA NAME- *1FLOOR      *

POINT       X              Y              Z            POINT       X              Y              Z
      0.1000000E 01 -0.0000000E-38  0.1000000E 01---(INTERNALLY GENERATED ORIENTATION VECTOR)
   1  0.1000000E 01  0.0000000E-38  0.0000000E-38       2   0.1000000E 01  0.1000000E 01  0.0000000E-38
   3  0.0000000E-38  0.1000000E 01  0.0000000E-38       4   0.0000000E-38  0.0000000E-38  0.0000000E-38


***** DATA NAME- *1WALL       *

POINT       X              Y              Z            POINT       X              Y              Z
      0.1000000E 01 -0.0000000E-38  0.1000000E 01---(INTERNALLY GENERATED ORIENTATION VECTOR)
   1  0.0000000E-38  0.0000000E-38  0.1000000E 01       2   0.0000000E-38  0.0000000E-38  0.0000000E-38
   3  0.0000000E-38  0.1000000E 01  0.0000000E-38       4   0.0000000E-38  0.1000000E 01  0.1000000E 01

COORDINATES OF POINTS ON BOUNDARY OF SURF    *1FLOOR      * FOR EACH Y INTERVAL
```

Figure 20. Group A Sample Problems Program Results (Sheet 4 of 37)

X-LEFT	X-RIGHT	Y	X-LEFT	X-RIGHT	Y
0.0000000E-38	0.1000000E 01	0.0000000E-38	0.0000000E-38	0.1000000E 01	0.4166667E-01
0.0000000E-38	0.1000000E 01	0.8333333E-01	0.0000000E-38	0.1000000E 01	0.1250000E 00
0.0000000E-38	0.1000000E 01	0.1666667E 00	0.0000000E-38	0.1000000E 01	0.2083333E 00
0.0000000E-38	0.1000000E 01	0.2500000E 00	0.0000000E-38	0.1000000E 01	0.2916667E 00
0.0000000E-38	0.1000000E 01	0.3333333E 00	0.0000000E-38	0.1000000E 01	0.3750000E 00
0.0000000E-38	0.1000000E 01	0.4166667E 00	0.0000000E-38	0.1000000E 01	0.4583333E 00
0.0000000E-38	0.1000000E 01	0.5000000E 00	0.0000000E-38	0.1000000E 01	0.5416666E 00
0.0000000E-38	0.1000000E 01	0.5833333E 00	0.0000000E-38	0.1000000E 01	0.6250000E 00
0.0000000E-38	0.1000000E 01	0.6666666E 00	0.0000000E-38	0.1000000E 01	0.7083333E 00
0.0000000E-38	0.1000000E 01	0.7500000E 00	0.0000000E-38	0.1000000E 01	0.7916666E 00
0.0000000E-38	0.1000000E 01	0.8333333E 00	0.0000000E-38	0.1000000E 01	0.8750000E 00
0.0000000E-38	0.1000000E 01	0.9166666E 00	0.0000000E-38	0.1000000E 01	0.9583333E 00
0.0000000E-38	0.1000000E 01	0.1000000E 01			

NO. OF HORIZONTAL INCREMENTS= 24 NO. OF VERTICAL INCREMENTS= 24

THE FOLLOWING ARE PLANE POINT CONFIGURATION FACTORS COMPUTED FOR THIS RUN
LOWEST GRID LINE FIRST, FROM X-LEFT TO X-RIGHT.

0.2500000E 00	0.2381714E 00	0.2264098E 00	0.2147805E 00	0.2033451E 00	0.1921608E 00
0.1812784E 00	0.1707421E 00	0.1605884E 00	0.1508463E 00	0.1415374E 00	0.1326757E 00
0.1242689E 00	0.1163187E 00	0.1088213E 00	0.1017688E 00	0.9514960E-01	0.8894909E-01
0.8315061E-01	0.7773592E-01	0.7268577E-01	0.6798038E-01	0.6359979E-01	0.5952420E-01
0.5573420E-01					
0.5000000E 00	0.3627489E 00	0.2993618E 00	0.2647417E 00	0.2406955E 00	0.2215649E 00
0.2051995E 00	0.1906369E 00	0.1773929E 00	0.1652008E 00	0.1539019E 00	0.1433944E 00
0.1336074E 00	0.1244870E 00	0.1159894E 00	0.1080764E 00	0.1007129E 00	0.9386608E-01
0.8750442E-01	0.8159761E-01	0.7611643E-01	0.7103273E-01	0.6631951E-01	0.6195098E-01
0.5790261E-01					
0.5000000E 00	0.4135154E 00	0.3496923E 00	0.3058146E 00	0.2737868E 00	0.2486091E 00
0.2276612E 00	0.2095478E 00	0.1934858E 00	0.1790103E 00	0.1658296E 00	0.1537498E 00
0.1426349E 00	0.1323835E 00	0.1229162E 00	0.1141671E 00	0.1060798E 00	0.9860413E-01
0.9169456E-01	0.8530921E-01	0.7940921E-01	0.7395828E-01	0.6892256E-01	0.6427036E-01
0.5997213E-01					
0.5000000E 00	0.4356356E 00	0.3801883E 00	0.3358659E 00	0.3006194E 00	0.2718642E 00
0.2476720E 00	0.2267755E 00	0.2083611E 00	0.1918990E 00	0.1770340E 00	0.1635191E 00
0.1511751E 00	0.1398664E 00	0.1294859E 00	0.1199457E 00	0.1111711E 00	0.1030969E 00
0.9566517E-01	0.8882340E-01	0.8252385E-01	0.7672266E-01	0.7137946E-01	0.6645701E-01

Figure 20. Group A Sample Problems Program Results (Sheet 5 of 37)

```
0.6192094E-01
0.5000000E 00   0.4473657E 00   0.3990101E 00   0.3570122E 00   0.3213185E 00   0.2909358E 00
0.2647653E 00   0.2419023E 00   0.2216715E 00   0.2035842E 00   0.1872861E 00   0.1725157E 00
0.1590750E 00   0.1468093E 00   0.1355937E 00   0.1253244E 00   0.1159130E 00   0.1072821E 00
0.9936325E-01   0.9209504E-01   0.8542179E-01   0.7929282E-01   0.7366185E-01   0.6848651E-01
0.6372799E-01
0.5000000E 00   0.4544209E 00   0.4112148E 00   0.3718966E 00   0.3369377E 00   0.3061129E 00
0.2789097E 00   0.2547786E 00   0.2332360E 00   0.2138885E 00   0.1964244E 00   0.1805977E 00
0.1662118E 00   0.1531066E 00   0.1411489E 00   0.1302257E 00   0.1202389E 00   0.1111026E 00
0.1027400E 00   0.9508227E-01   0.8806704E-01   0.8163780E-01   0.7574306E-01   0.7033587E-01
0.6537341E-01
0.5000000E 00   0.4590002E 00   0.4194697E 00   0.3824940E 00   0.3486228E 00   0.3179568E 00
0.2903267E 00   0.2654469E 00   0.2430097E 00   0.2227285E 00   0.2043526E 00   0.1876684E 00
0.1724943E 00   0.1586752E 00   0.1460774E 00   0.1345840E 00   0.1240917E 00   0.1145086E 00
0.1057520E 00   0.9774738E-01   0.9042696E-01   0.8372935E-01   0.7759864E-01   0.7198393E-01
0.6683890E-01
0.5000000E 00   0.4621056E 00   0.4252060E 00   0.3901042E 00   0.3573098E 00   0.3270483E 00
0.2993339E 00   0.2740546E 00   0.2510376E 00   0.2300914E 00   0.2110276E 00   0.1936706E 00
0.1778607E 00   0.1634541E 00   0.1503215E 00   0.1383464E 00   0.1274235E 00   0.1174576E 00
0.1083618E 00   0.1000575E 00   0.9247279E-01   0.8554240E-01   0.7920679E-01   0.7341175E-01
0.6810303E-01
0.5000000E 00   0.4642507E 00   0.4292292E 00   0.3955579E 00   0.3636870E 00   0.3338817E 00
0.3062500E 00   0.2807856E 00   0.2574107E 00   0.2360083E 00   0.2164437E 00   0.1985776E 00
0.1822734E 00   0.1674011E 00   0.1538385E 00   0.1414719E 00   0.1301962E 00   0.1199146E 00
0.1105380E 00   0.1019848E 00   0.9418001E-01   0.8705545E-01   0.8054869E-01   0.7460294E-01
0.6916649E-01
0.5000000E 00   0.4657200E 00   0.4320121E 00   0.3993846E 00   0.3682363E 00   0.3388398E 00
0.3113485E 00   0.2858183E 00   0.2622336E 00   0.2405309E 00   0.2206169E 00   0.2023829E 00
0.1857127E 00   0.1704894E 00   0.1565984E 00   0.1439300E 00   0.1323804E 00   0.1218524E 00
0.1122557E 00   0.1035067E 00   0.9552856E-01   0.8825074E-01   0.8160876E-01   0.7554381E-01
0.7000237E-01
0.5000000E 00   0.4666782E 00   0.4338384E 00   0.4019193E 00   0.3712832E 00   0.3421993E 00
0.3148421E 00   0.2893024E 00   0.2656025E 00   0.2437138E 00   0.2235724E 00   0.2050913E 00
0.1881704E 00   0.1727031E 00   0.1585815E 00   0.1456994E 00   0.1339547E 00   0.1232505E 00
0.1134958E 00   0.1046060E 00   0.9650285E-01   0.8911442E-01   0.8237474E-01   0.7622362E-01
0.7060623E-01
0.5000000E 00   0.4672204E 00   0.4348755E 00   0.4033667E 00   0.3730350E 00   0.3441448E 00
0.3168800E 00   0.2913482E 00   0.2675923E 00   0.2456034E 00   0.2253343E 00   0.2067115E 00
0.1896446E 00   0.1740338E 00   0.1597756E 00   0.1467662E 00   0.1349048E 00   0.1240948E 00
0.1142451E 00   0.1052704E 00   0.9709184E-01   0.8963658E-01   0.8283786E-01   0.7663463E-01
0.7097129E-01
0.5000000E 00   0.4673959E 00   0.4352119E 00   0.4038375E 00   0.3736066E 00   0.3447819E 00
0.3175495E 00   0.2920227E 00   0.2682502E 00   0.2462298E 00   0.2259196E 00   0.2072507E 00
```

Figure 20. Group A Sample Problems Program Results (Sheet 6 of 37)

0.1901359E 00	0.1744778E 00	0.1601743E 00	0.1471226E 00	0.1352224E 00	0.1243771E 00
0.1144957E 00	0.1054927E 00	0.9728890E-01	0.8981130E-01	0.8299282E-01	0.7677215E-01
0.7109344E-01					
0.5000000E 00	0.4672204E 00	0.4348755E 00	0.4033667E 00	0.3730350E 00	0.3441448E 00
0.3168800E 00	0.2913487E 00	0.2675923E 00	0.2456034E 00	0.2253343E 00	0.2067115E 00
0.1896446E 00	0.1740338E 00	0.1597756E 00	0.1467662E 00	0.1349048E 00	0.1240948E 00
0.1142451E 00	0.1052704E 00	0.9709184E-01	0.8963658E-01	0.8283786E-01	0.7663463E-01
0.7097129E-01					
0.5000000E 00	0.4666782E 00	0.4338384E 00	0.4019193E 00	0.3712832E 00	0.3421993E 00
0.3148421E 00	0.2893024E 00	0.2656025E 00	0.2437138E 00	0.2235724E 00	0.2050913E 00
0.1881704E 00	0.1727031E 00	0.1585815E 00	0.1456994E 00	0.1339547E 00	0.1232505E 00
0.1134958E 00	0.1046060E 00	0.9650286E-01	0.8911442E-01	0.8237474E-01	0.7622363E-01
0.7060623E-01					
0.5000000E 00	0.4657200E 00	0.4320121E 00	0.3993846E 00	0.3682363E 00	0.3388398E 00
0.3113485E 00	0.2859183E 00	0.2622336E 00	0.2405309E 00	0.2206169E 00	0.2023829E 00
0.1857127E 00	0.1704894E 00	0.1565984E 00	0.1439300E 00	0.1323804E 00	0.1218524E 00
0.1122557E 00	0.1035067E 00	0.9552856E-01	0.8825074E-01	0.8160876E-01	0.7554381E-01
0.7000236E-01					
0.5000000E 00	0.4642507E 00	0.4292292E 00	0.3955579E 00	0.3636870E 00	0.3338817E 00
0.3062500E 00	0.2807856E 00	0.2574107E 00	0.2360083E 00	0.2164437E 00	0.1985776E 00
0.1822734E 00	0.1674011E 00	0.1538385E 00	0.1414719E 00	0.1301962E 00	0.1199146E 00
0.1105360E 00	0.1019848E 00	0.9418002E-01	0.8705545E-01	0.8054869E-01	0.7460294E-01
0.6916649E-01					
0.5000000E 00	0.4621056E 00	0.4252061E 00	0.3901042E 00	0.3573098E 00	0.3270483E 00
0.2993339E 00	0.2740546E 00	0.2510376E 00	0.2300914E 00	0.2110276E 00	0.1936706E 00
0.1778607E 00	0.1634541E 00	0.1503215E 00	0.1383464E 00	0.1274235E 00	0.1174576E 00
0.1083618E 00	0.1000575E 00	0.9247279E-01	0.8554241E-01	0.7920679E-01	0.7341175E-01
0.6810803E-01					
0.5000000E 00	0.4590002E 00	0.4194697E 00	0.3824940E 00	0.3486228E 00	0.3179568E 00
0.2903267E 00	0.2654470E 00	0.2430097E 00	0.2227285E 00	0.2043526E 00	0.1876684E 00
0.1724943E 00	0.1586752E 00	0.1460774E 00	0.1345840E 00	0.1240917E 00	0.1145086E 00
0.1057521E 00	0.9774738E-01	0.9042696E-01	0.8372935E-01	0.7759864E-01	0.7198393E-01
0.6683890E-01					
0.5000000E 00	0.4544209E 00	0.4112148E 00	0.3718967E 00	0.3369377E 00	0.3061129E 00
0.2789097E 00	0.2547786E 00	0.2332360E 00	0.2138885E 00	0.1964244E 00	0.1805977E 00
0.1662118E 00	0.1531066E 00	0.1411489E 00	0.1302257E 00	0.1202389E 00	0.1111026E 00
0.1027400E 00	0.9508227E-01	0.8806705E-01	0.8163781E-01	0.7574306E-01	0.7033587E-01
0.6537342E-01					
0.5000000E 00	0.4473657E 00	0.3990101E 00	0.3570122E 00	0.3213185E 00	0.2909358E 00
0.2647653E 00	0.2419023E 00	0.2216715E 00	0.2035842E 00	0.1872861E 00	0.1725157E 00
0.1590750E 00	0.1468093E 00	0.1355937E 00	0.1253244E 00	0.1159130E 00	0.1072821E 00
0.9936326E-01	0.9209505E-01	0.8542179E-01	0.7929283E-01	0.7366185E-01	0.6848651E-01
0.6372799E-01					

Figure 20. Group A Sample Problems Program Results (Sheet 7 of 37)

```
0.5000000E 00   0.4356356E 00   0.3801883E 00   0.3358659E 00   0.3006195E 00   0.2718643E 00
0.2476720E 00   0.2267756E 00   0.2083612E 00   0.1913990E 00   0.1770340E 00   0.1635191E 00
0.1511751E 00   0.1398664E 00   0.1294859E 00   0.1199457E 00   0.1111711E 00   0.1030970E 00
0.9566518E-01   0.8882341E-01   0.8252385E-01   0.7672266E-01   0.7137946E-01   0.6645701E-01
0.6192094E-01
0.5000000E 00   0.4135154E 00   0.3496924E 00   0.3058146E 00   0.2737868E 00   0.2486091E 00
0.2276612E 00   0.2095478E 00   0.1934858E 00   0.1790103E 00   0.1658296E 00   0.1537498E 00
0.1426349E 00   0.1323835E 00   0.1229162E 00   0.1141671E 00   0.1060798E 00   0.9860413E-01
0.9169456E-01   0.8530921E-01   0.7940921E-01   0.7395829E-01   0.6892256E-01   0.6427036E-01
0.5997213E-01
0.5000000E 00   0.3627490E 00   0.2993619E 00   0.2647418E 00   0.2406956E 00   0.2215649E 00
0.2051995E 00   0.1906369E 00   0.1773929E 00   0.1652008E 00   0.1539019E 00   0.1433945E 00
0.1336074E 00   0.1244870E 00   0.1159894E 00   0.1080764E 00   0.1007129E 00   0.9386609E-01
0.8750442E-01   0.8150762E-01   0.7611643E-01   0.7103273E-01   0.6631951E-01   0.6195098E-01
0.5790261E-01
0.2500000E 00   0.2381714E 00   0.2264098E 00   0.2147805E 00   0.2033451E 00   0.1921608E 00
0.1812784E 00   0.1707421E 00   0.1605884E 00   0.1508463E 00   0.1415374E 00   0.1326757E 00
0.1242689E 00   0.1163187E 00   0.1088213E 00   0.1017688E 00   0.9514960E-01   0.8894909E-01
0.8315061E-01   0.7773592E-01   0.7268577E-01   0.6798038E-01   0.6359979E-01   0.5952420E-01
0.5573420E-01
```

Figure 20. Group A Sample Problems Program Results (Sheet 8 of 37)

```
NAA CONFAC II REPORT SAMPLE PROBLEMS GROUP A   K.A.TOUPS,7/31/65

RUN NO.   2   DATA USED FOR THIS RUN- *1WALL *1FLOOR*
                                      *      *      *
                                      *      *      *

THE FORM FACTOR FROM SURFACE *1WALL        * TO SURFACE *1FLOOR       * = 0.19996

THE EXCHANGE COEFFICIENT (EA)=   0.19996E 00 SQ UNITS

                 THE MAPPING AREA = 0.1000000E 01 SQ UNITS

THE AREA OF SURFACE *1WALL        * = 0.1000000E 01 SQ UNITS.

THE AREA OF SURFACE *1FLOOR       * = 0.1000000E 01 SQ UNITS.

THE FORM FACTOR FROM SURFACE *1FLOOR       * TO SURFACE *1WALL        * = 0.19996

THE FOLLOWING ARE THE (FINAL) SURFACE COORDINATES USED FOR THE FACTOR COMPUTATION-


***** DATA NAME- *1WALL        *

POINT        X              Y              Z              POINT        X              Y              Z
      -0.0000000E-38  0.0000000E-38  0.1000000E 01---(INTERNALLY GENERATED ORIENTATION VECTOR)
   1  -0.0000000E-38  0.0000000E-38  0.0000000E-38        2   0.1000000E 01  0.0000000E-38  0.0000000E-38
   3   0.1000000E 01  0.1000000E 01  0.0000000E-38        4  -0.0000000E-38  0.1000000E 01  0.0000000E-38


***** DATA NAME- *1FLOOR       *

POINT        X              Y              Z              POINT        X              Y              Z
      -0.0000000E-38  0.0000000E-38  0.1000000E 01---(INTERNALLY GENERATED ORIENTATION VECTOR)
   1   0.1000000E 01  0.0000000E-38  0.1000000E 01        2   0.1000000E 01  0.1000000E 01  0.1000000E 01
   3   0.1000000E 01  0.1000000E 01  0.0000000E-38        4   0.1000000E 01  0.0000000E-38  0.0000000E-38

COORDINATES OF POINTS ON BOUNDARY OF SURF    *1WALL        * FOR EACH Y INTERVAL
```

Figure 20. Group A Sample Problems Program Results (Sheet 9 of 37)

X-LEFT	X-RIGHT	Y	X-LEFT	X-RIGHT	Y
-0.0000000E-38	0.1000000E 01	0.0000000E-38	-0.0000000E-38	0.1000000E 01	0.4166667E-01
-0.0000000E-38	0.1000000E 01	0.8333333E-01	-0.0000000E-38	0.1000000E 01	0.1250000E 00
-0.0000000E-38	0.1000000E 01	0.1666667E 00	-0.0000000E-38	0.1000000E 01	0.2083333E 00
-0.0000000E-38	0.1000000E 01	0.2500000E 00	-0.0000000E-38	0.1000000E 01	0.2916667E 00
-0.0000000E-38	0.1000000E 01	0.3333333E 00	-0.0000000E-38	0.1000000E 01	0.3750000E 00
-0.0000000E-38	0.1000000E 01	0.4166667E 00	-0.0000000E-38	0.1000000E 01	0.4583333E 00
-0.0000000E-38	0.1000000E 01	0.5000000E 00	-0.0000000E-38	0.1000000E 01	0.5416666E 00
-0.0000000E-38	0.1000000E 01	0.5833333E 00	-0.0000000E-38	0.1000000E 01	0.6250000E 00
-0.0000000E-38	0.1000000E 01	0.6666666E 00	-0.0000000E-38	0.1000000E 01	0.7083333E 00
-0.0000000E-38	0.1000000E 01	0.7500000E 00	-0.0000000E-38	0.1000000E 01	0.7916666E 00
-0.0000000E-38	0.1000000E 01	0.8333333E 00	-0.0000000E-38	0.1000000E 01	0.8750000E 00
-0.0000000E-38	0.1000000E 01	0.9166666E 00	-0.0000000E-38	0.1000000E 01	0.9583333E 00
-0.0000000E-38	0.1000000E 01	0.1000000E 01			

NO. OF HORIZONTAL INCREMENTS= 24 NO. OF VERTICAL INCREMENTS= 24

THE FOLLOWING ARE PLANE POINT CONFIGURATION FACTORS COMPUTED FOR THIS RUN
LOWEST GRID LINE FIRST, FROM X-LEFT TO X-RIGHT.

0.5573420E-01	0.5952419E-01	0.6359978E-01	0.6798038E-01	0.7268577E-01	0.7773592E-01
0.8315061E-01	0.8894909E-01	0.9514960E-01	0.1017688E 00	0.1088213E 00	0.1163187E 00
0.1242689E 00	0.1326757E 00	0.1415374E 00	0.1508464E 00	0.1605884E 00	0.1707421E 00
0.1812784E 00	0.1921608E 00	0.2033451E 00	0.2147805E 00	0.2264099E 00	0.2381714E 00
0.2500000E 00					
0.5790261E-01	0.6195098E-01	0.6631951E-01	0.7103273E-01	0.7611643E-01	0.8159761E-01
0.8750442E-01	0.9386608E-01	0.1007129E 00	0.1080764E 00	0.1159894E 00	0.1244870E 00
0.1336074E 00	0.1433945E 00	0.1539019E 00	0.1652008E 00	0.1773929E 00	0.1906369E 00
0.2051995E 00	0.2215649E 00	0.2406956E 00	0.2647418E 00	0.2993619E 00	0.3627491E 00
0.5000000E 00					
0.5997213E-01	0.6427035E-01	0.6892255E-01	0.7395828E-01	0.7940920E-01	0.8530920E-01
0.9169455E-01	0.9860413E-01	0.1060798E 00	0.1141671E 00	0.1229162E 00	0.1323835E 00
0.1426349E 00	0.1537498E 00	0.1658296E 00	0.1790103E 00	0.1934858E 00	0.2095478E 00
0.2276612E 00	0.2486091E 00	0.2737868E 00	0.3058146E 00	0.3496924E 00	0.4135155E 00
0.5000000E 00					
0.6192094E-01	0.6645700E-01	0.7137946E-01	0.7672266E-01	0.8252385E-01	0.8882340E-01
0.9566517E-01	0.1030969E 00	0.1111711E 00	0.1199457E 00	0.1294859E 00	0.1398664E 00
0.1511751E 00	0.1635191E 00	0.1770340E 00	0.1918990E 00	0.2083612E 00	0.2267756E 00
0.2476720E 00	0.2718643E 00	0.3006195E 00	0.3358659E 00	0.3801883E 00	0.4356357E 00

Figure 20. Group A Sample Problems Program Results (Sheet 10 of 37)

0.5000000E 00					
0.6372799E-01	0.6848651E-01	0.7366185E-01	0.7929282E-01	0.8542179E-01	0.9209504E-01
0.9936325E-01	0.1072821E 00	0.1159130E 00	0.1253244E 00	0.1355937E 00	0.1468093E 00
0.1590750E 00	0.1725157E 00	0.1872861E 00	0.2035842E 00	0.2216715E 00	0.2419023E 00
0.2647653E 00	0.2909358E 00	0.3213185E 00	0.3570122E 00	0.3990102E 00	0.4473658E 00
0.5000000E 00					
0.6537341E-01	0.7033587E-01	0.7574306E-01	0.8163760E-01	0.8806704E-01	0.9508226E-01
0.1027400E 00	0.1111026E 00	0.1202389E 00	0.1302257E 00	0.1411489E 00	0.1531066E 00
0.1662118E 00	0.1805977E 00	0.1964244E 00	0.2138885E 00	0.2332360E 00	0.2547786E 00
0.2789097E 00	0.3061129E 00	0.3369377E 00	0.3716967E 00	0.4112149E 00	0.4544210E 00
0.5000000E 00					
0.6683890E-01	0.7198393E-01	0.7759863E-01	0.8372935E-01	0.9042696E-01	0.9774737E-01
0.1057520E 00	0.1145086E 00	0.1240917E 00	0.1345840E 00	0.1460774E 00	0.1586752E 00
0.1724943E 00	0.1876684E 00	0.2043526E 00	0.2227285E 00	0.2430098E 00	0.2654470E 00
0.2903267E 00	0.3179569E 00	0.3486228E 00	0.3824940E 00	0.4194698E 00	0.4590003E 00
0.5000000E 00					
0.6810803E-01	0.7341175E-01	0.7920678E-01	0.8554240E-01	0.9247279E-01	0.1000575E 00
0.1083618E 00	0.1174576E 00	0.1274235E 00	0.1383464E 00	0.1503215E 00	0.1634541E 00
0.1778607E 00	0.1936706E 00	0.2110276E 00	0.2300914E 00	0.2510376E 00	0.2740546E 00
0.2993340E 00	0.3270483E 00	0.3573098E 00	0.3901042E 00	0.4252061E 00	0.4621057E 00
0.5000000E 00					
0.6916649E-01	0.7460293E-01	0.8054869E-01	0.8705544E-01	0.9418001E-01	0.1019848E 00
0.1105380E 00	0.1199146E 00	0.1301962E 00	0.1414719E 00	0.1538385E 00	0.1674011E 00
0.1822734E 00	0.1985776E 00	0.2164437E 00	0.2360083E 00	0.2574107E 00	0.2807856E 00
0.3062500E 00	0.3338818E 00	0.3636870E 00	0.3955580E 00	0.4292293E 00	0.4642507E 00
0.5000000E 00					
0.7000237E-01	0.7554381E-01	0.8160876E-01	0.8825073E-01	0.9552856E-01	0.1035067E 00
0.1122557E 00	0.1218524E 00	0.1323804E 00	0.1439300E 00	0.1565984E 00	0.1704894E 00
0.1857127E 00	0.2023829E 00	0.2206170E 00	0.2405309E 00	0.2622337E 00	0.2858183E 00
0.3113485E 00	0.3388399E 00	0.3682364E 00	0.3993847E 00	0.4320122E 00	0.4657200E 00
0.5000000E 00					
0.7060623E-01	0.7622362E-01	0.8237474E-01	0.8911441E-01	0.9650285E-01	0.1046060E 00
0.1134958E 00	0.1232505E 00	0.1339547E 00	0.1456994E 00	0.1585815E 00	0.1727031E 00
0.1881704E 00	0.2050914E 00	0.2235724E 00	0.2437139E 00	0.2656025E 00	0.2893024E 00
0.3148422E 00	0.3421993E 00	0.3712832E 00	0.4019193E 00	0.4338385E 00	0.4666783E 00
0.5000000E 00					
0.7097129E-01	0.7663462E-01	0.8283785E-01	0.8963658E-01	0.9709184E-01	0.1052704E 00
0.1142451E 00	0.1240949E 00	0.1349048E 00	0.1467662E 00	0.1597756E 00	0.1740339E 00
0.1896446E 00	0.2067116E 00	0.2253344E 00	0.2456034E 00	0.2675923E 00	0.2913482E 00
0.3168800E 00	0.3441449E 00	0.3730350E 00	0.4033668E 00	0.4348755E 00	0.4672204E 00
0.5000000E 00					
0.7109344E-01	0.7677214E-01	0.8299281E-01	0.8981129E-01	0.9728890E-01	0.1054927E 00
0.1144957E 00	0.1243771E 00	0.1352224E 00	0.1471226E 00	0.1601743E 00	0.1744778E 00

Figure 20. Group A Sample Problems Program Results (Sheet 11 of 37)

0.1901359E 00	0.2072507E 00	0.2259196E 00	0.2462298E 00	0.2682503E 00	0.2920227E 00
0.3175497E 00	0.3447820E 00	0.3736067E 00	0.4038376E 00	0.4352120E 00	0.4673960E 00
0.5000000E 00					
0.7097129E-01	0.7663462E-01	0.8283785E-01	0.8963658E-01	0.9709184E-01	0.1052704E 00
0.1142451E 00	0.1240948E 00	0.1349048E 00	0.1467662E 00	0.1597756E 00	0.1740339E 00
0.1896446E 00	0.2067116E 00	0.2253344E 00	0.2456034E 00	0.2675923E 00	0.2913483E 00
0.3168800E 00	0.3441449E 00	0.3730350E 00	0.4033668E 00	0.4348755E 00	0.4672204E 00
0.5000000E 00					
0.7060623E-01	0.7622362E-01	0.8237474E-01	0.8911441E-01	0.9650285E-01	0.1046060E 00
0.1134958E 00	0.1232505E 00	0.1339547E 00	0.1456994E 00	0.1585815E 00	0.1727031E 00
0.1881704E 00	0.2050914E 00	0.2235724E 00	0.2437139E 00	0.2656025E 00	0.2893024E 00
0.3148422E 00	0.3421993E 00	0.3712832E 00	0.4019193E 00	0.4338385E 00	0.4666783E 00
0.5000000E 00					
0.7000236E-01	0.7554381E-01	0.8160876E-01	0.8825073E-01	0.9552856E-01	0.1035067E 00
0.1122557E 00	0.1218524E 00	0.1323804E 00	0.1439300E 00	0.1565984E 00	0.1704894E 00
0.1857127E 00	0.2023829E 00	0.2206170E 00	0.2405309E 00	0.2622337E 00	0.2858183E 00
0.3113485E 00	0.3388399E 00	0.3682364E 00	0.3993847E 00	0.4320122E 00	0.4657200E 00
0.5000000E 00					
0.6916649E-01	0.7460293E-01	0.8054869E-01	0.8705545E-01	0.9418001E-01	0.1019848E 00
0.1105380E 00	0.1199146E 00	0.1301962E 00	0.1414719E 00	0.1538385E 00	0.1674011E 00
0.1822734E 00	0.1985776E 00	0.2164437E 00	0.2360083E 00	0.2574107E 00	0.2807856E 00
0.3062500E 00	0.3338818E 00	0.3636870E 00	0.3955580E 00	0.4292293E 00	0.4642507E 00
0.5000000E 00					
0.6810803E-01	0.7341175E-01	0.7920678E-01	0.8554240E-01	0.9247279E-01	0.1000575E 00
0.1083618E 00	0.1174576E 00	0.1274235E 00	0.1383464E 00	0.1503215E 00	0.1634541E 00
0.1778607E 00	0.1936706E 00	0.2110276E 00	0.2300914E 00	0.2510376E 00	0.2740546E 00
0.2993340E 00	0.3270483E 00	0.3573098E 00	0.3901042E 00	0.4252061E 00	0.4621057E 00
0.5000000E 00					
0.6683890E-01	0.7198393E-01	0.7759863E-01	0.8372935E-01	0.9042696E-01	0.9774738E-01
0.1057520E 00	0.1145086E 00	0.1240917E 00	0.1345840E 00	0.1460774E 00	0.1586752E 00
0.1724943E 00	0.1876684E 00	0.2043526E 00	0.2227285E 00	0.2430098E 00	0.2654470E 00
0.2903267E 00	0.3179569E 00	0.3486229E 00	0.3824940E 00	0.4194698E 00	0.4590003E 00
0.5000000E 00					
0.6537342E-01	0.7033587E-01	0.7574306E-01	0.8163780E-01	0.8806704E-01	0.9508227E-01
0.1027400E 00	0.1111026E 00	0.1202390E 00	0.1302257E 00	0.1411489E 00	0.1531066E 00
0.1662113E 00	0.1805977E 00	0.1964244E 00	0.2138885E 00	0.2332360E 00	0.2547786E 00
0.2789098E 00	0.3061129E 00	0.3369378E 00	0.3718967E 00	0.4112149E 00	0.4544210E 00
0.5000000E 00					
0.6372799E-01	0.6848651E-01	0.7366185E-01	0.7929282E-01	0.8542179E-01	0.9209504E-01
0.9936325E-01	0.1072821E 00	0.1159130E 00	0.1253244E 00	0.1355937E 00	0.1468093E 00
0.1590750E 00	0.1725157E 00	0.1872861E 00	0.2035843E 00	0.2216715E 00	0.2419023E 00
0.2647654E 00	0.2909358E 00	0.3213185E 00	0.3570123E 00	0.3990102E 00	0.4473658E 00
0.5000000E 00					

Figure 20. Group A Sample Problems Program Results (Sheet 12 of 37)

0.6192094E-01	0.6645700E-01	0.7137946E-01	0.7672266E-01	0.8252385E-01	0.8882341E-01
0.9566517E-01	0.1030970E 00	0.1111711E 00	0.1199457E 00	0.1294859E 00	0.1398664E 00
0.1511751E 00	0.1635191E 00	0.1770341E 00	0.1918991E 00	0.2083612E 00	0.2267756E 00
0.2476721E 00	0.2718643E 00	0.3006195E 00	0.3358659E 00	0.3801884E 00	0.4356357E 00
0.5000000E 00					
0.5997213E-01	0.6427035E-01	0.6892256E-01	0.7395828E-01	0.7940921E-01	0.8530921E-01
0.9169456E-01	0.9860413E-01	0.1060798E 00	0.1141671E 00	0.1229162E 00	0.1323835E 00
0.1426349E 00	0.1537498E 00	0.1658296E 00	0.1790103E 00	0.1934858E 00	0.2095478E 00
0.2276613E 00	0.2486091E 00	0.2737869E 00	0.3058147E 00	0.3496924E 00	0.4135156E 00
0.5000000E 00					
0.5790261E-01	0.6195098E-01	0.6631951E-01	0.7103273E-01	0.7611643E-01	0.8159761E-01
0.8750442E-01	0.9386609E-01	0.1007129E 00	0.1080764E 00	0.1159894E 00	0.1244870E 00
0.1336074E 00	0.1433945E 00	0.1539020E 00	0.1652008E 00	0.1773929E 00	0.1906369E 00
0.2051995E 00	0.2215649E 00	0.2406956E 00	0.2647418E 00	0.2993620E 00	0.3627492E 00
0.5000000E 00					
0.5573420E-01	0.5952419E-01	0.6359978E-01	0.6798038E-01	0.7268577E-01	0.7773592E-01
0.8315061E-01	0.8894909E-01	0.9514960E-01	0.1017688E 00	0.1088213E 00	0.1163187E 00
0.1242689E 00	0.1326757E 00	0.1415374E 00	0.1508464E 00	0.1605884E 00	0.1707421E 00
0.1812784E 00	0.1921608E 00	0.2033451E 00	0.2147805E 00	0.2264099E 00	0.2381714E 00
0.2500000E 00					

Figure 20. Group A Sample Problems Program Results (Sheet 13 of 37)

```
NAA CONFAC II REPORT SAMPLE PROBLEMS GROUP A   K.A.TOUPS,7/31/65

RUN NO.   3   DATA USED FOR THIS RUN- *1FLOOR*2WALLS*
                                      *      *      *
                                      *      *      *

THE FORM FACTOR FROM SURFACE *1FLOOR      * TO SURFACE *2WALLS      * = 0.39992

THE EXCHANGE COEFFICIENT (FA)=   0.39992E 00 SQ UNITS

                THE MAPPING AREA = 0.1000000E 01 SQ UNITS

THE AREA OF SURFACE *1FLOOR      * = 0.1000000E 01 SQ UNITS.

THE FOLLOWING ARE THE (FINAL) SURFACE COORDINATES USED FOR THE FACTOR COMPUTATION-


***** DATA NAME- *1FLOOR      *

POINT       X              Y              Z            POINT       X              Y              Z
        0.1000000E 01 -0.0000000E-38  0.1000000E 01---(INTERNALLY GENERATED ORIENTATION VECTOR)
   1    0.1000000E 01  0.0000000E-38  0.0000000E-38      2    0.1000000E 01  0.1000000E 01  0.0000000E-38
   3    0.0000000E-38  0.1000000E 01  0.0000000E-38      4    0.0000000E-38  0.0000000E-38  0.0000000E-38


***** DATA NAME- *2WALLS      *

POINT       X              Y              Z            POINT       X              Y              Z
   1    0.0000000E-38  0.0000000E-38  0.1000000E 01      2    0.0000000E-38  0.0000000E-38  0.0000000E-38
   3    0.0000000E-38  0.1000000E 01  0.0000000E-38      4    0.1000000E 01  0.1000000E 01  0.0000000E-38
   5    0.1000000E 01  0.1000000E 01  0.1000000E 01      6    0.0000000E-38  0.1000000E 01  0.1000000E 01

COORDINATES OF POINTS ON BOUNDARY OF SURF    *1FLOOR      * FOR EACH Y INTERVAL

      X-LEFT          X-RIGHT          Y                      X-LEFT          X-RIGHT          Y

  0.0000000E-38  0.1000000E 01  0.0000000E-38            0.0000000E-38  0.1000000E 01  0.4166667E-01
  0.0000000E-38  0.1000000E 01  0.8333333E-01            0.0000000E-38  0.1000000E 01  0.1250000E 00
```

Figure 20. Group A Sample Problems Program Results (Sheet 14 of 37)

0.0000000E-38	0.1000000E 01	0.1666667E 00	0.0000000E-38	0.1000000E 01	0.2083333E 00
0.0000000E-38	0.1000000E 01	0.2500000E 00	0.0000000E-38	0.1000000E 01	0.2916667E 00
0.0000000E-38	0.1000000E 01	0.3333333E 00	0.0000000E-38	0.1000000E 01	0.3750000E 00
0.0000000E-38	0.1000000E 01	0.4166667E 00	0.0000000E-38	0.1000000E 01	0.4583333E 00
0.0000000E-38	0.1000000E 01	0.5000000E 00	0.0000000E-38	0.1000000E 01	0.5416666E 00
0.0000000E-38	0.1000000E 01	0.5833333E 00	0.0000000E-38	0.1000000E 01	0.6250000E 00
0.0000000E-38	0.1000000E 01	0.6666666E 00	0.0000000E-38	0.1000000E 01	0.7083333E 00
0.0000000E-38	0.1000000E 01	0.7500000E 00	0.0000000E-38	0.1000000E 01	0.7916666E 00
0.0000000E-38	0.1000000E 01	0.8333333E 00	0.0000000E-38	0.1000000E 01	0.8750000E 00
0.0000000E-38	0.1000000E 01	0.9166666E 00	0.0000000E-38	0.1000000E 01	0.9583333E 00
0.0000000E-38	0.1000000E 01	0.1000000E 01			

NO. OF HORIZONTAL INCREMENTS= 24 NO. OF VERTICAL INCREMENTS= 24

THE FOLLOWING ARE PLANE POINT CONFIGURATION FACTORS COMPUTED FOR THIS RUN
LOWEST GRID LINE FIRST, FROM X-LEFT TO X-RIGHT.

0.3057342E 00	0.2960740E 00	0.2863820E 00	0.2767014E 00	0.2670731E 00	0.2575342E 00
0.2481173E 00	0.2388501E 00	0.2297549E 00	0.2208487E 00	0.2121436E 00	0.2036470E 00
0.1953623E 00	0.1872899E 00	0.1794275E 00	0.1717712E 00	0.1643161E 00	0.1570571E 00
0.1499895E 00	0.1431093E 00	0.1364138E 00	0.1299013E 00	0.1235719E 00	0.1174268E 00
0.1114684E 00					
0.5595242E 00	0.4246999E 00	0.3636322E 00	0.3311987E 00	0.3091820E 00	0.2919007E 00
0.2771834E 00	0.2640486E 00	0.2519958E 00	0.2407446E 00	0.2301255E 00	0.2200291E 00
0.2103795E 00	0.2011216E 00	0.1922130E 00	0.1836202E 00	0.1753158E 00	0.1672778E 00
0.1594383E 00	0.1519335E 00	0.1446029E 00	0.1374897E 00	0.1305899E 00	0.1239020E 00
0.1174268E 00					
0.5635998E 00	0.4798349E 00	0.4186149E 00	0.3771940E 00	0.3474486E 00	0.3243521E 00
0.3052598E 00	0.2887545E 00	0.2740344E 00	0.2606191E 00	0.2482043E 00	0.2365876E 00
0.2256277E 00	0.2152214E 00	0.2052909E 00	0.1957759E 00	0.1866285E 00	0.1778109E 00
0.1692932E 00	0.1610522E 00	0.1530710E 00	0.1453377E 00	0.1378451E 00	0.1305899E 00
0.1235719E 00					
0.5679804E 00	0.5066683E 00	0.4541465E 00	0.4125885E 00	0.3799123E 00	0.3535020E 00
0.3314013E 00	0.3123179E 00	0.2954166E 00	0.2801497E 00	0.2661484E 00	0.2531557E 00
0.2409864E 00	0.2295030E 00	0.2186003E 00	0.2081965E 00	0.1982266E 00	0.1886393E 00
0.1793945E 00	0.1704612E 00	0.1618167E 00	0.1534453E 00	0.1453377E 00	0.1374897E 00
0.1299013E 00					
0.5726858E 00	0.5234821E 00	0.4784193E 00	0.4395360E 00	0.4067403E 00	0.3790028E 00
0.3551923E 00	0.3343750E 00	0.3158515E 00	0.2991128E 00	0.2837889E 00	0.2696075E 00
0.2563639E 00	0.2439011E 00	0.2320965E 00	0.2208530E 00	0.2100930E 00	0.1997548E 00

Figure 20. Group A Sample Problems Program Results (Sheet 15 of 37)

0.1897902E 00	0.1801621E 00	0.1708436E 00	0.1618167E 00	0.1530710E 00	0.1446029E 00
0.1364138E 00					
0.5777359E 00	0.5360185E 00	0.4965240E 00	0.4607200E 00	0.4290327E 00	0.4011951E 00
0.3766571E 00	0.3548360E 00	0.3352207E 00	0.3173952E 00	0.3010304E 00	0.2858681E 00
0.2717044E 00	0.2583769E 00	0.2457549E 00	0.2337323E 00	0.2222237E 00	0.2111601E 00
0.2004874E 00	0.1901645E 00	0.1801621E 00	0.1704612E 00	0.1610523E 00	0.1519335E 00
0.1431093E 00					
0.5831506E 00	0.5465046E 00	0.5111643E 00	0.4781591E 00	0.4479860E 00	0.4206968E 00
0.3960787E 00	0.3738087E 00	0.3535477E 00	0.3349841E 00	0.3178484E 00	0.3019134E 00
0.2869899E 00	0.2729203E 00	0.2595732E 00	0.2468396E 00	0.2346297E 00	0.2228704E 00
0.2115041E 00	0.2004874E 00	0.1897902E 00	0.1793945E 00	0.1692932E 00	0.1594883E 00
0.1499895E 00					
0.5889491E 00	0.5559717E 00	0.5238102E 00	0.4932011E 00	0.4645918E 00	0.4381509E 00
0.4138425E 00	0.3915121E 00	0.3709522E 00	0.3519438E 00	0.3342781E 00	0.3177654E 00
0.3022378E 00	0.2875489E 00	0.2735720E 00	0.2601988E 00	0.2473381E 00	0.2349151E 00
0.2228704E 00	0.2111601E 00	0.1997548E 00	0.1886393E 00	0.1778109E 00	0.1672778E 00
0.1570571E 00					
0.5951496E 00	0.5649636E 00	0.5353090E 00	0.5067291E 00	0.4795999E 00	0.4541207E 00
0.4303417E 00	0.4082091E 00	0.3876069E 00	0.3683887E 00	0.3503984E 00	0.3334824E 00
0.3174958E 00	0.3023059E 00	0.2877932E 00	0.2738522E 00	0.2603924E 00	0.2473381E 00
0.2346297E 00	0.2222237E 00	0.2100930E 00	0.1982266E 00	0.1866285E 00	0.1753158E 00
0.1643161E 00					
0.6017683E 00	0.5737963E 00	0.5461792E 00	0.5193303E 00	0.4935607E 00	0.4690655E 00
0.4459324E 00	0.4241647E 00	0.4037055E 00	0.3844608E 00	0.3663163E 00	0.3491491E 00
0.3328353E 00	0.3172556E 00	0.3022978E 00	0.2878600E 00	0.2738522E 00	0.2601988E 00
0.2468396E 00	0.2337323E 00	0.2208530E 00	0.2081965E 00	0.1957758E 00	0.1836202E 00
0.1717712E 00					
0.6088213E 00	0.5826676E 00	0.5567546E 00	0.5314052E 00	0.5068769E 00	0.4833481E 00
0.4609195E 00	0.4396239E 00	0.4194409E 00	0.4003122E 00	0.3821539E 00	0.3648669E 00
0.3483446E 00	0.3324786E 00	0.3171629E 00	0.3022978E 00	0.2877932E 00	0.2735720E 00
0.2595732E 00	0.2457549E 00	0.2320965E 00	0.2186003E 00	0.2052909E 00	0.1922130E 00
0.1794275E 00					
0.6163187E 00	0.5917073E 00	0.5672590E 00	0.5432331E 00	0.5198442E 00	0.4972514E 00
0.4755552E 00	0.4548023E 00	0.4349934E 00	0.4160927E 00	0.3980374E 00	0.3807454E 00
0.3641224E 00	0.3480677E 00	0.3324786E 00	0.3172556E 00	0.3023059E 00	0.2875489E 00
0.2729202E 00	0.2583769E 00	0.2439011E 00	0.2295029E 00	0.2152213E 00	0.2011216E 00
0.1872899E 00					
0.6242689E 00	0.6010033E 00	0.5778468E 00	0.5550126E 00	0.5326816E 00	0.5109937E 00
0.4900439E 00	0.4698833E 00	0.4505236E 00	0.4319424E 00	0.4140900E 00	0.3968953E 00
0.3802718E 00	0.3641224E 00	0.3483447E 00	0.3328353E 00	0.3174958E 00	0.3022378E 00
0.2869899E 00	0.2717044E 00	0.2563639E 00	0.2409863E 00	0.2256277E 00	0.2103795E 00
0.1953623E 00					
0.6326757E 00	0.6106148E 00	0.5886253E 00	0.5668858E 00	0.5455506E 00	0.5247425E 00

Figure 20. Group A Sample Problems Program Results (Sheet 16 of 37)

0.5045483E 00	0.4850188E 00	0.4661699E 00	0.4479863E 00	0.4304256E 00	0.4134231E 00
0.3968953E 00	0.3807454E 00	0.3648669E 00	0.3491491E 00	0.3334823E 00	0.3177654E 00
0.3019134E 00	0.2859681E 00	0.2696075E 00	0.2531556E 00	0.2365876E 00	0.2200290E 00
0.2036470E 00					
0.6415373E 00	0.6205801E 00	0.5996680E 00	0.5789533E 00	0.5585693E 00	0.5386236E 00
0.5191947E 00	0.5003300E 00	0.4820461E 00	0.4643307E 00	0.4471448E 00	0.4304256E 00
0.4140900E 00	0.3980374E 00	0.3821539E 00	0.3663163E 00	0.3503984E 00	0.3342781E 00
0.3178484E 00	0.3010303E 00	0.2837889E 00	0.2661484E 00	0.2482043E 00	0.2301255E 00
0.2121436E 00					
0.6508463E 00	0.6309207E 00	0.6110224E 00	0.5912836E 00	0.5718205E 00	0.5527283E 00
0.5340769E 00	0.5159097E 00	0.4982419E 00	0.4810617E 00	0.4643307E 00	0.4479862E 00
0.4319424E 00	0.4160927E 00	0.4003122E 00	0.3844608E 00	0.3683887E 00	0.3519438E 00
0.3349841E 00	0.3173951E 00	0.2991127E 00	0.2801497E 00	0.2606190E 00	0.2407445E 00
0.2208487E 00					
0.6605884E 00	0.6416435E 00	0.6227150E 00	0.6039190E 00	0.5853584E 00	0.5671177E 00
0.5492597E 00	0.5318231E 00	0.5148214E 00	0.4982419E 00	0.4820461E 00	0.4661698E 00
0.4505236E 00	0.4349934E 00	0.4194409E 00	0.4037055E 00	0.3876069E 00	0.3709521E 00
0.3535477E 00	0.3352207E 00	0.3158515E 00	0.2954165E 00	0.2740344E 00	0.2519958E 00
0.2297549E 00					
0.6707421E 00	0.6527425E 00	0.6347538E 00	0.6168797E 00	0.5992120E 00	0.5818268E 00
0.5647808E 00	0.5481091E 00	0.5318231E 00	0.5159097E 00	0.5003300E 00	0.4850188E 00
0.4698833E 00	0.4548023E 00	0.4396239E 00	0.4241647E 00	0.4082091E 00	0.3915121E 00
0.3738087E 00	0.3548360E 00	0.3343750E 00	0.3123179E 00	0.2887545E 00	0.2640486E 00
0.2388501E 00					
0.6812784E 00	0.6641997E 00	0.6471309E 00	0.6301660E 00	0.6133881E 00	0.5968665E 00
0.5806533E 00	0.5647808E 00	0.5492597E 00	0.5340769E 00	0.5191947E 00	0.5045483E 00
0.4900438E 00	0.4755551E 00	0.4609195E 00	0.4459324E 00	0.4303416E 00	0.4138425E 00
0.3960787E 00	0.3766570E 00	0.3551922E 00	0.3314013E 00	0.3052598E 00	0.2771833E 00
0.2481173E 00					
0.6921608E 00	0.6759857E 00	0.6598238E 00	0.6437608E 00	0.6278734E 00	0.6122257E 00
0.5968665E 00	0.5818268E 00	0.5671177E 00	0.5527283E 00	0.5386236E 00	0.5247425E 00
0.5109937E 00	0.4972513E 00	0.4833481E 00	0.4690654E 00	0.4541206E 00	0.4381509E 00
0.4206963E 00	0.4011951E 00	0.3790027E 00	0.3535020E 00	0.3243520E 00	0.2919007E 00
0.2575342E 00					
0.7033451E 00	0.6880612E 00	0.6727369E 00	0.6576316E 00	0.6426369E 00	0.6278734E 00
0.6133881E 00	0.5992120E 00	0.5853584E 00	0.5718205E 00	0.5585693E 00	0.5455506E 00
0.5326816E 00	0.5198442E 00	0.5068768E 00	0.4935607E 00	0.4795999E 00	0.4645918E 00
0.4479860E 00	0.4290327E 00	0.4067402E 00	0.3799122E 00	0.3474485E 00	0.3091820E 00
0.2670731E 00					
0.7147804E 00	0.7003773E 00	0.6860028E 00	0.6717317E 00	0.6576316E 00	0.6437608E 00
0.6301660E 00	0.6168797E 00	0.6039190E 00	0.5912836E 00	0.5789533E 00	0.5668858E 00
0.5550126E 00	0.5432331E 00	0.5314052E 00	0.5193303E 00	0.5067290E 00	0.4932011E 00
0.4781591E 00	0.4607200E 00	0.4395360E 00	0.4125884E 00	0.3771939E 00	0.3311986E 00

Figure 20. Group A Sample Problems Program Results (Sheet 17 of 37)

```
0.2767014E 00
0.7264098E 00   0.7128772E 00   0.6993846E 00   0.6860028E 00   0.6727969E 00   0.6598238E 00
0.6471309E 00   0.6347538E 00   0.6227150E 00   0.6110224E 00   0.5996679E 00   0.5886253E 00
0.5778468E 00   0.5672590E 00   0.5567545E 00   0.5461792E 00   0.5353090E 00   0.5238101E 00
0.5111642E 00   0.4965239E 00   0.4784192E 00   0.4541465E 00   0.4186147E 00   0.3636320E 00
0.2863820E 00
0.7381714E 00   0.7254978E 00   0.7128772E 00   0.7003773E 00   0.6880612E 00   0.6759857E 00
0.6641996E 00   0.6527425E 00   0.6416435E 00   0.6309207E 00   0.6205801E 00   0.6106148E 00
0.6010033E 00   0.5917073E 00   0.5826676E 00   0.5737963E 00   0.5649635E 00   0.5559717E 00
0.5465046E 00   0.5360184E 00   0.5234821E 00   0.5066682E 00   0.4798348E 00   0.4246997E 00
0.2960740E 00
0.5000000E 00   0.7381714E 00   0.7264098E 00   0.7147805E 00   0.7033451E 00   0.6921608E 00
0.6812784E 00   0.6707421E 00   0.6605884E 00   0.6508463E 00   0.6415374E 00   0.6326757E 00
0.6242689E 00   0.6163187E 00   0.6088213E 00   0.6017688E 00   0.5951496E 00   0.5889491E 00
0.5831506E 00   0.5777359E 00   0.5726858E 00   0.5679804E 00   0.5635998E 00   0.5595242E 00
0.3057342E 00
```

Figure 20. Group A Sample Problems Program Results (Sheet 18 of 37)

```
NAA CONFAC II REPORT SAMPLE PROBLEMS GROUP A   K.A.TOUPS,7/31/65

RUN NO.   4   DATA USED FOR THIS RUN- *2WALLS*1FLOOR*
                                      *      *      *
                                      *      *      *

A NONPLANAR SURFACE CANNOT BE USED AS SURFACE 1-THIS RUN ABORTED.
```

Figure 20. Group A Sample Problems Program Results (Sheet 19 of 37)

```
NAA CONFAC II REPORT SAMPLE PROBLEMS GROUP A   K.A.TOUPS,7/31/65

RUN NO.   5   DATA USED FOR THIS RUN- *1FLOOR*1WALLR*
                                      *      *      *
                                      *      *      *

NONE OF SURFACE *1FLOOR      * IS SEEN BY SURFACE *1WALLR      *

IF THE ABOVE RESULT IS UNEXPECTED, DO NOT BECOME ALARMED- IT HAPPENS TO THE BEST OF EM. JUST CHECK YOUR
DATA-ESPECIALLY BE SURE THAT YOU ENTERED ALL POINTS IN COUNTERCLOCKWISE ORDER, AS THEY APPEAR WHEN
FACING THE ACTIVE SIDE OF THE SURFACE, AND DERIVED FROM A RIGHT-HANDED COORDINATE SYSTEM.
```

Figure 20. Group A Sample Problems Program Results (Sheet 20 of 37)

```
                    NAA CONFAC II REPORT SAMPLE PROBLEMS GROUP A   K.A.TOUPS,7/31/65

RUN NO.    6   DATA USED FOR THIS RUN- *1FLOOR*2WALLZ*
                                       *      *      *
                                       *      *      *

THE FORM FACTOR FROM SURFACE *1FLOOR      * TO SURFACE *2WALLZ      * = 0.39992

THE EXCHANGE COEFFICIENT (FA)=   0.39992E 00 SQ UNITS

                  THE MAPPING AREA = 0.1000000E 01 SQ UNITS

THE AREA OF SURFACE *1FLOOR      * = 0.1000000E 01 SQ UNITS.

ONLY A PART OF SURFACE *2WALLZ      * SEES SURFACE *1FLOOR      *

THE FOLLOWING ARE THE (FINAL) SURFACE COORDINATES USED FOR THE FACTOR COMPUTATION-


***** DATA NAME- *1FLOOR      *

POINT       X              Y              Z              POINT       X              Y              Z
       0.1000000E 01 -0.0000000E-38  0.1000000E 01---(INTERNALLY GENERATED ORIENTATION VECTOR)
   1   0.1000000E 01  0.0000000E-38  0.0000000E-38        2   0.1000000E 01  0.1000000E 01  0.0000000E-38
   3   0.0000000E-38  0.1000000E 01  0.0000000E-38        4   0.0000000E-38  0.0000000E-38  0.0000000E-38


***** DATA NAME- *2WALLZ      *

POINT       X              Y              Z              POINT       X              Y              Z
   1   0.0000000E-38  0.0000000E-38  0.1000000E 01        2   0.0000000E-38  0.0000000E-38  0.0000000E-38
   3   0.1000000E 01  0.1000000E 01  0.0000000E-38        4   0.1000000E 01  0.1000000E 01  0.1000000E 01
   5   0.0000000E-38  0.1000000E 01  0.1000000E 01

COORDINATES OF POINTS ON BOUNDARY OF SURF    *1FLOOR      * FOR EACH Y INTERVAL

      X-LEFT          X-RIGHT          Y                      X-LEFT          X-RIGHT          Y
```

Figure 20. Group A Sample Problems Program Results (Sheet 21 of 37)

```
0.0000000E-38  0.1000000E 01  0.0000000E-38        0.0000000E-38  0.1000000E 01  0.4166667E-01
0.0000000E-38  0.1000000E 01  0.8333333E-01        0.0000000E-38  0.1000000E 01  0.1250000E 00
0.0000000E-38  0.1000000E 01  0.1666667E 00        0.0000000E-38  0.1000000E 01  0.2083333E 00
0.0000000E-38  0.1000000E 01  0.2500000E 00        0.0000000E-38  0.1000000E 01  0.2916667E 00
0.0000000E-38  0.1000000E 01  0.3333333E 00        0.0000000E-38  0.1000000E 01  0.3750000E 00
0.0000000E-38  0.1000000E 01  0.4166667E 00        0.0000000E-38  0.1000000E 01  0.4583333E 00
0.0000000E-38  0.1000000E 01  0.5000000E 00        0.0000000E-38  0.1000000E 01  0.5416666E 00
0.0000000E-38  0.1000000E 01  0.5833333E 00        0.0000000E-38  0.1000000E 01  0.6250000E 00
0.0000000E-38  0.1000000E 01  0.6666666E 00        0.0000000E-38  0.1000000E 01  0.7083333E 00
0.0000000E-38  0.1000000E 01  0.7500000E 00        0.0000000E-38  0.1000000E 01  0.7916666E 00
0.0000000E-38  0.1000000E 01  0.8333333E 00        0.0000000E-38  0.1000000E 01  0.8750000E 00
0.0000000E-38  0.1000000E 01  0.9166666E 00        0.0000000E-38  0.1000000E 01  0.9583333E 00
0.0000000E-38  0.1000000E 01  0.1000000E 01

NO. OF HORIZONTAL INCREMENTS= 24  NO. OF VERTICAL INCREMENTS= 24

THE FOLLOWING ARE PLANE POINT CONFIGURATION FACTORS COMPUTED FOR THIS RUN
LOWEST GRID LINE FIRST, FROM X-LEFT TO X-RIGHT.

0.1807342E 00  0.2960740E 00  0.2863820E 00  0.2767014E 00  0.2670731E 00  0.2575342E 00
0.2481173E 00  0.2388501E 00  0.2297549E 00  0.2208487E 00  0.2121436E 00  0.2036470E 00
0.1953624E 00  0.1872900E 00  0.1794275E 00  0.1717712E 00  0.1643161E 00  0.1570571E 00
0.1499895E 00  0.1431093E 00  0.1364138E 00  0.1299013E 00  0.1235719E 00  0.1174268E 00
0.1114684E 00
0.5595242E 00  0.4246999E 00  0.3636322E 00  0.3311987E 00  0.3091820E 00  0.2919007E 00
0.2771834E 00  0.2640487E 00  0.2519958E 00  0.2407446E 00  0.2301256E 00  0.2200291E 00
0.2103795E 00  0.2011216E 00  0.1922131E 00  0.1836202E 00  0.1753159E 00  0.1672778E 00
0.1594884E 00  0.1519335E 00  0.1446029E 00  0.1374897E 00  0.1305899E 00  0.1239020E 00
0.1174268E 00
0.5635998E 00  0.4798349E 00  0.4186149E 00  0.3771940E 00  0.3474486E 00  0.3243521E 00
0.3052598E 00  0.2887546E 00  0.2740345E 00  0.2606191E 00  0.2482043E 00  0.2365877E 00
0.2256277E 00  0.2152214E 00  0.2052909E 00  0.1957759E 00  0.1866285E 00  0.1778109E 00
0.1692932E 00  0.1610523E 00  0.1530711E 00  0.1453377E 00  0.1378451E 00  0.1305899E 00
0.1235719E 00
0.5679804E 00  0.5066683E 00  0.4541465E 00  0.4125885E 00  0.3799123E 00  0.3535020E 00
0.3314013E 00  0.3123179E 00  0.2954166E 00  0.2801498E 00  0.2661484E 00  0.2531557E 00
0.2409864E 00  0.2295030E 00  0.2186003E 00  0.2081965E 00  0.1982266E 00  0.1886394E 00
0.1793945E 00  0.1704612E 00  0.1618167E 00  0.1534453E 00  0.1453377E 00  0.1374897E 00
0.1299013E 00
```

Figure 20. Group A Sample Problems Program Results (Sheet 22 of 37)

0.5726658E 00	0.5234821E 00	0.4784193E 00	0.4395360E 00	0.4067403E 00	0.3790028E 00
0.3551923E 00	0.3343750E 00	0.3158515E 00	0.2991128E 00	0.2837889E 00	0.2696075E 00
0.2563639E 00	0.2439011E 00	0.2320965E 00	0.2208530E 00	0.2100930E 00	0.1997549E 00
0.1897902E 00	0.1801621E 00	0.1708436E 00	0.1618167E 00	0.1530711E 00	0.1446029E 00
0.1364138E 00					
0.5777359E 00	0.5360185E 00	0.4965240E 00	0.4607200E 00	0.4290327E 00	0.4011951E 00
0.3766571E 00	0.3548360E 00	0.3352207E 00	0.3173952E 00	0.3010304E 00	0.2858681E 00
0.2717045E 00	0.2583770E 00	0.2457549E 00	0.2337324E 00	0.2222237E 00	0.2111601E 00
0.2004874E 00	0.1901645E 00	0.1801621E 00	0.1704612E 00	0.1610523E 00	0.1519335E 00
0.1431093E 00					
0.5831506E 00	0.5465046E 00	0.5111643E 00	0.4781591E 00	0.4479860E 00	0.4206968E 00
0.3960787E 00	0.3738087E 00	0.3535477E 00	0.3349841E 00	0.3178484E 00	0.3019134E 00
0.2869899E 00	0.2729203E 00	0.2595732E 00	0.2468397E 00	0.2346297E 00	0.2228704E 00
0.2115041E 00	0.2004874E 00	0.1897902E 00	0.1793945E 00	0.1692932E 00	0.1594883E 00
0.1499895E 00					
0.5889491E 00	0.5559717E 00	0.5238102E 00	0.4932011E 00	0.4645918E 00	0.4381509E 00
0.4138425E 00	0.3915121E 00	0.3709522E 00	0.3519438E 00	0.3342781E 00	0.3177654E 00
0.3022378E 00	0.2875489E 00	0.2735720E 00	0.2601988E 00	0.2473381E 00	0.2349151E 00
0.2228704E 00	0.2111601E 00	0.1997549E 00	0.1886393E 00	0.1778109E 00	0.1672778E 00
0.1570571E 00					
0.5951496E 00	0.5649635E 00	0.5353090E 00	0.5067290E 00	0.4795999E 00	0.4541207E 00
0.4303417E 00	0.4082091E 00	0.3876069E 00	0.3683887E 00	0.3503984E 00	0.3334824E 00
0.3174958E 00	0.3023059E 00	0.2877932E 00	0.2738522E 00	0.2603924E 00	0.2473381E 00
0.2346297E 00	0.2222237E 00	0.2100930E 00	0.1982266E 00	0.1866285E 00	0.1753159E 00
0.1643161E 00					
0.6017688E 00	0.5737963E 00	0.5461792E 00	0.5193303E 00	0.4935607E 00	0.4690655E 00
0.4459324E 00	0.4241647E 00	0.4037055E 00	0.3844608E 00	0.3663163E 00	0.3491491E 00
0.3328353E 00	0.3172556E 00	0.3022978E 00	0.2878600E 00	0.2738522E 00	0.2601988E 00
0.2468396E 00	0.2337324E 00	0.2208530E 00	0.2081965E 00	0.1957759E 00	0.1836202E 00
0.1717712E 00					
0.6088213E 00	0.5826676E 00	0.5567546E 00	0.5314052E 00	0.5068769E 00	0.4833481E 00
0.4609195E 00	0.4396239E 00	0.4194409E 00	0.4003122E 00	0.3821539E 00	0.3648669E 00
0.3483447E 00	0.3324787E 00	0.3171629E 00	0.3022978E 00	0.2877932E 00	0.2735720E 00
0.2595732E 00	0.2457549E 00	0.2320965E 00	0.2186003E 00	0.2052909E 00	0.1922130E 00
0.1794275E 00					
0.6163186E 00	0.5917073E 00	0.5672590E 00	0.5432331E 00	0.5198442E 00	0.4972514E 00
0.4755551E 00	0.4548023E 00	0.4349934E 00	0.4160927E 00	0.3980374E 00	0.3807454E 00
0.3641224E 00	0.3480677E 00	0.3324787E 00	0.3172556E 00	0.3023059E 00	0.2875489E 00
0.2729203E 00	0.2583769E 00	0.2439011E 00	0.2295030E 00	0.2152214E 00	0.2011216E 00
0.1872900E 00					
0.6242689E 00	0.6010033E 00	0.5778468E 00	0.5550126E 00	0.5326816E 00	0.5109937E 00
0.4900439E 00	0.4698833E 00	0.4505236E 00	0.4319424E 00	0.4140900E 00	0.3968953E 00
0.3802718E 00	0.3641224E 00	0.3483447E 00	0.3328353E 00	0.3174958E 00	0.3022378E 00

Figure 20. Group A Sample Problems Program Results (Sheet 23 of 37)

0.2869899E 00	0.2717044E 00	0.2563639E 00	0.2409864E 00	0.2256277E 00	0.2103795E 00
0.1953624E 00					
0.6326757E 00	0.6106148E 00	0.5886253E 00	0.5668858E 00	0.5455506E 00	0.5247425E 00
0.5045483E 00	0.4850188E 00	0.4661698E 00	0.4479862E 00	0.4304256E 00	0.4134230E 00
0.3968953E 00	0.3807454E 00	0.3648669E 00	0.3491491E 00	0.3334823E 00	0.3177654E 00
0.3019134E 00	0.2858681E 00	0.2696075E 00	0.2531557E 00	0.2365876E 00	0.2200291E 00
0.2036470E 00					
0.6415373E 00	0.6205801E 00	0.5996680E 00	0.5789533E 00	0.5585693E 00	0.5386236E 00
0.5191947E 00	0.5003300E 00	0.4820461E 00	0.4643307E 00	0.4471448E 00	0.4304256E 00
0.4140900E 00	0.3980374E 00	0.3821539E 00	0.3663163E 00	0.3503984E 00	0.3342781E 00
0.3178484E 00	0.3010303E 00	0.2837889E 00	0.2661484E 00	0.2482043E 00	0.2301255E 00
0.2121436E 00					
0.6508463E 00	0.6309207E 00	0.6110224E 00	0.5912836E 00	0.5718205E 00	0.5527282E 00
0.5340769E 00	0.5159097E 00	0.4982419E 00	0.4810617E 00	0.4643307E 00	0.4479862E 00
0.4319424E 00	0.4160927E 00	0.4003122E 00	0.3844608E 00	0.3683887E 00	0.3519438E 00
0.3349841E 00	0.3173951E 00	0.2991127E 00	0.2801497E 00	0.2606190E 00	0.2407446E 00
0.2208487E 00					
0.6605884E 00	0.6416435E 00	0.6227150E 00	0.6039190E 00	0.5853584E 00	0.5671177E 00
0.5492597E 00	0.5318231E 00	0.5148214E 00	0.4982419E 00	0.4820461E 00	0.4661698E 00
0.4505236E 00	0.4349934E 00	0.4194409E 00	0.4037055E 00	0.3876069E 00	0.3709521E 00
0.3535477E 00	0.3352207E 00	0.3158515E 00	0.2954166E 00	0.2740344E 00	0.2519958E 00
0.2297549E 00					
0.6707421E 00	0.6527425E 00	0.6347538E 00	0.6168797E 00	0.5992120E 00	0.5818268E 00
0.5647808E 00	0.5481091E 00	0.5318231E 00	0.5159097E 00	0.5003300E 00	0.4850188E 00
0.4698833E 00	0.4548023E 00	0.4396239E 00	0.4241647E 00	0.4082091E 00	0.3915121E 00
0.3738087E 00	0.3548360E 00	0.3343750E 00	0.3123179E 00	0.2887545E 00	0.2640486E 00
0.2388501E 00					
0.6812784E 00	0.6641996E 00	0.6471309E 00	0.6301659E 00	0.6133881E 00	0.5968665E 00
0.5806533E 00	0.5647808E 00	0.5492597E 00	0.5340769E 00	0.5191947E 00	0.5045483E 00
0.4900438E 00	0.4755551E 00	0.4609195E 00	0.4459324E 00	0.4303416E 00	0.4138425E 00
0.3960787E 00	0.3766570E 00	0.3551922E 00	0.3314013E 00	0.3052598E 00	0.2771833E 00
0.2481173E 00					
0.6921608E 00	0.6759857E 00	0.6598238E 00	0.6437608E 00	0.6278734E 00	0.6122257E 00
0.5968665E 00	0.5818268E 00	0.5671177E 00	0.5527282E 00	0.5386236E 00	0.5247425E 00
0.5109937E 00	0.4972513E 00	0.4833481E 00	0.4690654E 00	0.4541206E 00	0.4381509E 00
0.4206968E 00	0.4011951E 00	0.3790027E 00	0.3535020E 00	0.3243520E 00	0.2919007E 00
0.2575342E 00					
0.7033451E 00	0.6880612E 00	0.6727969E 00	0.6576316E 00	0.6426369E 00	0.6278734E 00
0.6133881E 00	0.5992120E 00	0.5853584E 00	0.5718205E 00	0.5585693E 00	0.5455506E 00
0.5326816E 00	0.5198442E 00	0.5068768E 00	0.4935607E 00	0.4795999E 00	0.4645918E 00
0.4479860E 00	0.4290327E 00	0.4067402E 00	0.3799122E 00	0.3474485E 00	0.3091820E 00
0.2670731E 00					
0.7147804E 00	0.7003773E 00	0.6860028E 00	0.6717317E 00	0.6576316E 00	0.6437608E 00

Figure 20. Group A Sample Problems Program Results (Sheet 24 of 37)

```
0.6301659E 00   0.6168797E 00   0.6039190E 00   0.5912836E 00   0.5789533E 00   0.5668858E 00
0.5550126E 00   0.5432331E 00   0.5314052E 00   0.5193303E 00   0.5067290E 00   0.4932011E 00
0.4781591E 00   0.4607200E 00   0.4395360E 00   0.4125884E 00   0.3771939E 00   0.3311986E 00
0.2767014E 00
0.7264098E 00   0.7128772E 00   0.6993846E 00   0.6860028E 00   0.6727969E 00   0.6598238E 00
0.6471309E 00   0.6347538E 00   0.6227150E 00   0.6110224E 00   0.5996679E 00   0.5886253E 00
0.5778468E 00   0.5672590E 00   0.5567545E 00   0.5461792E 00   0.5353090E 00   0.5238101E 00
0.5111642E 00   0.4965239E 00   0.4784192E 00   0.4541465E 00   0.4186147E 00   0.3636320E 00
0.2863820E 00
0.7381714E 00   0.7254978E 00   0.7128772E 00   0.7003773E 00   0.6880612E 00   0.6759857E 00
0.6641996E 00   0.6527425E 00   0.6416435E 00   0.6309207E 00   0.6205801E 00   0.6106148E 00
0.6010033E 00   0.5917073E 00   0.5826676E 00   0.5737963E 00   0.5649635E 00   0.5559717E 00
0.5465046E 00   0.5360184E 00   0.5234821E 00   0.5066682E 00   0.4798348E 00   0.4246997E 00
0.2960740E 00
0.7500000E 00   0.7381714E 00   0.7264098E 00   0.7147804E 00   0.7033451E 00   0.6921608E 00
0.6812784E 00   0.6707421E 00   0.6605884E 00   0.6508463E 00   0.6415373E 00   0.6326757E 00
0.6242689E 00   0.6163187E 00   0.6088213E 00   0.6017688E 00   0.5951496E 00   0.5889491E 00
0.5831506E 00   0.5777359E 00   0.5726858E 00   0.5679804E 00   0.5635998E 00   0.5595242E 00
0.1807342E 00
```

Figure 20. Group A Sample Problems Program Results (Sheet 25 of 37)

```
NAA CONFAC II REPORT SAMPLE PROBLEMS GROUP A   K.A.TOUPS,7/31/65

RUN NO.   7   DATA USED FOR THIS RUN- *1FLOOR*1WALLR*
                                      *      *9R    *
                                      *N     *      *

THE FORM FACTOR FROM SURFACE *1FLOOR      * TO SURFACE *1WALLR9R    * = 0.19996

THE EXCHANGE COEFFICIENT (FA)=   0.19996E 00 SQ UNITS

                THE MAPPING AREA = 0.1000000E 01 SQ UNITS

THE AREA OF SURFACE *1FLOOR      * = 0.1000000E 01 SQ UNITS.

THE AREA OF SURFACE *1WALLR9R    * = 0.1000000E 01 SQ UNITS.

THE FORM FACTOR FROM SURFACE *1WALLR9R    * TO SURFACE *1FLOOR      * = 0.19996
```

Figure 20. Group A Sample Problems Program Results (Sheet 26 of 37)

```
NAA CONFAC II REPORT SAMPLE PROBLEMS GROUP A   K.A.TOUPS,7/31/65

RUN NO.   7   DATA USED FOR THIS RUN- *GROUPR*UN     *
                                      *       *      *
                                      *       *      *
```

Figure 20. Group A Sample Problems Program Results (Sheet 27 of 37)

```
NAA CONFAC II REPORT SAMPLE PROBLEMS GROUP A   K.A.TOUPS,7/31/65

RUN NO.   8   DATA USED FOR THIS RUN- *1FLOOR*1WALL *
                                      *      *      *
                                      *      *      *

THE FORM FACTOR FROM SURFACE *1FLOOR      * TO SURFACE *1WALL       * = 0.19996

THE EXCHANGE COEFFICIENT (FA)=   0.19996E 00 SQ UNITS

                THE MAPPING AREA = 0.1000000E 01 SQ UNITS

THE AREA OF SURFACE *1FLOOR      * = 0.1000000E 01 SQ UNITS.

THE AREA OF SURFACE *1WALL       * = 0.1000000E 01 SQ UNITS.

THE FORM FACTOR FROM SURFACE *1WALL       * TO SURFACE *1FLOOR      * = 0.19996
```

Figure 20. Group A Sample Problems Program Results (Sheet 28 of 37)

```
NAA CONFAC II REPORT SAMPLE PROBLEMS GROUP A   K.A.TOUPS,7/31/65

RUN NO.   9   DATA USED FOR THIS RUN- *1FLOOR*1WALLR*
                                      *      *      *
                                      *      *      *

NONE OF SURFACE *1FLOOR      * IS SEEN BY SURFACE *1WALLR      *

IF THE ABOVE RESULT IS UNEXPECTED, DO NOT BECOME ALARMED- IT HAPPENS TO THE BEST OF EM. JUST CHECK YOUR
DATA-ESPECIALLY BE SURE THAT YOU ENTERED ALL POINTS IN COUNTERCLOCKWISE ORDER, AS THEY APPEAR WHEN
FACING THE ACTIVE SIDE OF THE SURFACE, AND DERIVED FROM A RIGHT-HANDED COORDINATE SYSTEM.
```

Figure 20. Group A Sample Problems Program Results (Sheet 29 of 37)

```
NAA CONFAC II REPORT SAMPLE PROBLEMS GROUP A   K.A.TOUPS,7/31/65

RUN NO.  1C   DATA USED FOR THIS RUN- *1FLOOR*2WALLS*
                                      *      *      *
                                      *      *      *

THE FORM FACTOR FROM SURFACE *1FLOOR      * TO SURFACE *2WALLS      * = 0.39992

THE EXCHANGE COEFFICIENT (FA)=   0.39992E CC SQ UNITS

                THE MAPPING AREA = 0.1000000E 01 SQ UNITS

THE AREA OF SURFACE *1FLOOR      * = 0.1000000E 01 SQ UNITS.
```

Figure 20. Group A Sample Problems Program Results (Sheet 30 of 37)

```
NAA CONFAC II REPORT SAMPLE PROBLEMS GROUP A   K.A.TOUPS,7/31/65

RUN NO.  11   DATA USED FOR THIS RUN- *1FLOOR*2WALLZ*
                                      *      *      *
                                      *      *      *

THE FORM FACTOR FROM SURFACE *1FLOOR      * TO SURFACE *2WALLZ      * = 0.39992

THE EXCHANGE COEFFICIENT (FA)=   0.39992E 00 SQ UNITS

                THE MAPPING AREA = 0.1000000E 01 SQ UNITS

THE AREA OF SURFACE *1FLOOR      * = 0.1000000E 01 SQ UNITS.

ONLY A PART OF SURFACE *2WALLZ      * SEES SURFACE *1FLOOR      *
```

Figure 20. Group A Sample Problems Program Results (Sheet 31 of 37)

```
NAA CONFAC II REPORT SAMPLE PROBLEMS GROUP A   K.A.TOUPS,7/31/65

RUN NO.  12   DATA USED FOR THIS RUN- *1WALL *1WALLR*
                                      *      *      *
                                      *      *      *

NONE OF SURFACE *1WALL        * IS SEEN BY SURFACE *1WALLR      *

IF THE ABOVE RESULT IS UNEXPECTED, DO NOT BECOME ALARMED- IT HAPPENS TO THE BEST OF FM. JUST CHECK YOUR
DATA-ESPECIALLY BE SURE THAT YOU ENTERED ALL POINTS IN COUNTERCLOCKWISE ORDER, AS THEY APPEAR WHEN
FACING THE ACTIVE SIDE OF THE SURFACE, AND DERIVED FROM A RIGHT-HANDED COORDINATE SYSTEM.
```

Figure 20. Group A Sample Problems Program Results (Sheet 32 of 37)

```
NAA CONFAC II REPORT SAMPLE PROBLEMS GROUP A   K.A.TOUPS,7/31/65

RUN NO.  13   DATA USED FOR THIS RUN- *1WALL *2WALLS*
                                      *      *      *
                                      *      *      *

THE FORM FACTOR FROM SURFACE *1WALL       * TO SURFACE *2WALLS       * = 0.19996

THE EXCHANGE COEFFICIENT (FA)=   0.19996E 00 SQ UNITS

                THE MAPPING AREA = 0.1000000E 01 SQ UNITS

THE AREA OF SURFACE *1WALL       * = 0.1000000E 01 SQ UNITS.
```

Figure 20. Group A Sample Problems Program Results (Sheet 33 of 37)

```
NAA CONFAC II REPORT SAMPLE PROBLEMS GROUP A    K.A.TOUPS,7/31/65

RUN NO.  14    DATA USED FOR THIS RUN- *1WALL *2WALLZ*
                                       *      *      *
                                       *      *      *

THE FORM FACTOR FROM SURFACE *1WALL        * TO SURFACE *2WALLZ       * = 0.24062

THE EXCHANGE COEFFICIENT (FA)=   0.24062E 00 SQ UNITS

                THE MAPPING AREA = 0.1000000E 01 SQ UNITS

THE AREA OF SURFACE *1WALL        * = 0.1000000E 01 SQ UNITS.
```

Figure 20. Group A Sample Problems Program Results (Sheet 34 of 37)

```
NAA CONFAC II REPORT SAMPLE PROBLEMS GROUP A   K.A.TOUPS,7/31/65

RUN NO.  15   DATA USED FOR THIS RUN- *1WALLR*2WALLS*
                                       *      *      *
                                       *      *      *

NONE OF SURFACE *1WALLR       * IS SEEN BY SURFACE *2WALLS       *

IF THE ABOVE RESULT IS UNEXPECTED, DO NOT BECOME ALARMED- IT HAPPENS TO THE BEST OF EM. JUST CHECK YOUR
DATA-ESPECIALLY BE SURE THAT YOU ENTERED ALL POINTS IN COUNTERCLOCKWISE ORDER, AS THEY APPEAR WHEN
FACING THE ACTIVE SIDE OF THE SURFACE, AND DERIVED FROM A RIGHT-HANDED COORDINATE SYSTEM.
```

Figure 20. Group A Sample Problems Program Results (Sheet 35 of 37)

```
NAA CONFAC II REPORT SAMPLE PROBLEMS GROUP A   K.A.TOUPS,7/31/65

RUN NO.  16   DATA USED FOR THIS RUN- *1WALLR*2WALLZ*
                                      *      *      *
                                      *      *      *

NONE OF SURFACE *1WALLR       * IS SEEN BY SURFACE *2WALLZ       *

IF THE ABOVE RESULT IS UNEXPECTED, DO NOT BECOME ALARMED- IT HAPPENS TO THE BEST OF EM. JUST CHECK YOUR
DATA-ESPECIALLY BE SURE THAT YOU ENTERED ALL POINTS IN COUNTERCLOCKWISE ORDER, AS THEY APPEAR WHEN
FACING THE ACTIVE SIDE OF THE SURFACE, AND DERIVED FROM A RIGHT-HANDED COORDINATE SYSTEM.
```

Figure 20. Group A Sample Problems Program Results (Sheet 36 of 37)

```
NAA CONFAC II REPORT SAMPLE PROBLEMS GROUP A   K.A.TOUPS,7/31/65

RUN NO.  17   DATA USED FOR THIS RUN- *2WALLS*2WALLZ*
                                      *      *      *
                                      *      *      *

A NONPLANAR SURFACE CANNOT BE USED AS SURFACE 1-THIS RUN ABORTED.
```

Figure 20. Group A Sample Problems Program Results (Sheet 37 of 37)

SAMPLE PROBLEM GROUP B

The geometrical relationships used in this example are presented in Figure 21. The data sheets are shown in Figure 22 with results in Figure 23.

Problem 1B

The use of the surface generator and double bisection of surfaces is demonstrated. The plane surface 1PLAT1 is entered as usual in the data, but the octagonal disk 3DISK is created by specifications to the surface generator. Note that no connections data are created for a class 3 surface, but would be if the disk were named 6DISK.

The double bisection is easily seen in side view of 1PLAT1 and 3DISK. The results of the factor request from 1PLAT1 and 3DISK is shown in Run #1 output, indicating the areas in each surface seen by the other. The number of points defining 3DISK has been reduced to 7 and reorganized because of the bisection, as seen along the dotted line.

Problem 2B

The converse factor, 3DISK to 1PLAT1, is requested as Run #2. Because the disk is now surface 1, the final coordinate system in 3DISK is aligned so that the xy plane is the plane of the disk. Point 1' becomes the origin, and line segment 1'2' the X' axis. Note that the exchange coefficients (fA) are very nearly equal, as they should be because of the reciprocity theorem.

Notice that the factor from one surface to the other along the line of bisection is, in reality, zero, but the output is, in some cases, non-zero though quite small (10^{-8} order of magnitude). This is caused by accumulated internal truncation error, and is not significant enough to warrant concern here. (This is not the case, however, with some silhouette generator computations.)

Problem 3B

The capability of coordinate transformation is illustrated. Run #3 requests the factor from 1PLAT1 to 3DISK transformed to the position shown by the transformation data 9TDISK. The program detected, after transforming 3DISK, that it bisected 1PLAT1. As the output shows, the part of 1PLAT1 actually mapped was the trapezoid indicated in the top view, and in the output final coordinate data.

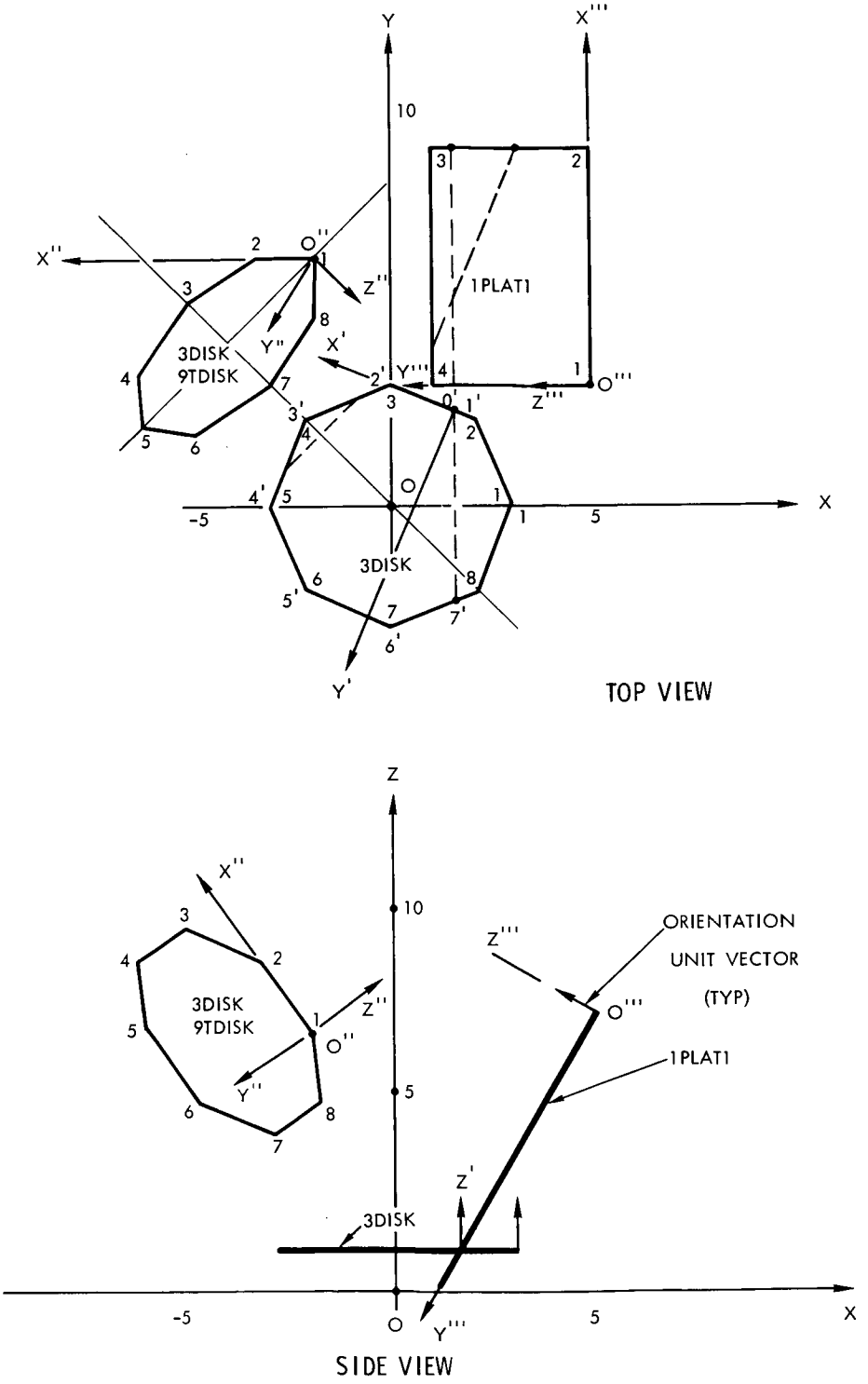

Figure 21. Group B Sample Problems Geometry

Problem 4B

It is quite feasible to generate or manually input a surface, transform the surface to a different location, and then ask for the factor between the original surface and the transformed surface. This is shown by Run #4, where 3DISK is used as surface 1, and 3DISK transformed by 9TDISK is used as surface 2. The output shows a bisection of 3DISK, removing the 4th boundary point, and therefore adding a point to the final 3DISK surface boundaries, making it 9 instead of 8.

Problem 5B

The factor from the transformed disk, 3DISK9TDISK, to 1PLAT1 is requested as Run #5, demonstrating program flexibility in that surface 1 is now transformed. The resulting exchange coefficient is very nearly equal to Run #3, as it should be.

FORTRAN FIXED 10 DIGIT DECIMAL DATA

DECK NO. GROUP B PROGRAMMER K.A. TOUPS DATE 7/31/65 PAGE 6 of 28 JOB NO. 2699-40

	NUMBER	IDENTIFICATION	DESCRIPTION DO NOT KEY PUNCH
1	TNAA CΦNFAC		
13	II REPΦRT $A		
25	MPLE PRΦBLEM		
37	$ GRΦUP B		
49	K.A.TΦUP$,7/	73 80	
61	31/65	201	
1	1PLAT1		
13	A $KEWED REC		
25	TANGULAR SUR		
37	FACE		
49		73 80	
61		202	
1	$D C=4,5.0,		
13	3.0,7.0,5,9,		
25	7,1,9,0.,1,3		
37	,0$		
49		73 80	
61		203	
1	3DI$K		
13	ΦCTAGΦNAL PΦ		
25	LYGON		
37			
49		73 80	
61		204	

Figure 22. Group B Sample Problems Input Data Code Sheets (Sheet 1 of 3)

NORTH AMERICAN AVIATION, INC.

SPACE and INFORMATION SYSTEMS DIVISION

FORTRAN FIXED 10 DIGIT DECIMAL DATA

DECK NO. GROUP B PROGRAMMER K.A. TOUPS DATE 7/31/65 PAGE 7 of 28 JOB NO. 2699-40

	NUMBER	IDENTIFICATION	DESCRIPTION DO NOT KEY PUNCH
1	$D C=8,0,0,		
13	1,3,3$		
25			
37			
49		73 80	
61		205	
1	9TDI$K		
13	TRAN$FØRM$ 3		
25	DI$K TØ $KEW		
37	ED PØSITIØN		
49	IN II QUADRA	73 80	
61	NT	206	
1	$D C=1,-1.9		
13	39339 8,6.181		
25	9806,6.59807		
37	5,3,-5.12132		
49	04,5.1213204	73 80	
61	,9.196150 00,	207	
1	7,-3,3,4$		
13			
25			
37			
49		73 80	
61		208	

Figure 22. Group B Sample Problems Input Data Code Sheets (Sheet 2 of 3)

NORTH AMERICAN AVIATION, INC.
SPACE and INFORMATION SYSTEMS DIVISION

FORTRAN FIXED 10 DIGIT DECIMAL DATA

DECK NO. GROUP B PROGRAMMER K.A. TOUPS DATE 7/31/65 PAGE 8 of 28 JOB NO. 2699-40

	NUMBER	IDENTIFICATION	DESCRIPTION DO NOT KEY PUNCH
1	1 PLAT13DI$K		PROBLEM 1B
13			
25	D		
37	3 DI$K 1PLAT1		PROBLEM 2B
49		73 80	
61		209	
1	1 PLAT13DI$K		PROBLEM 3B
13	9TDI$K		
25			
37	3 DI$K 3DI$K		PROBLEM 4B
49	9TDI$K	73 80	
61		210	
1	3 DI$K 1PLAT1		PROBLEM 5B
13	9 TDI$K		
25			
37			
49		73 80	
61		211	
1			
13			
25			
37			
49		73 80	
61			

Figure 22. Group B Sample Problems Input Data Code Sheets (Sheet 3 of 3)

NORTH AMERICAN AVIATION, INC.

SPACE and INFORMATION SYSTEMS DIVISION

```
                    NAA SPACE AND INFORMATION SYSTEMS DIVISION
                RADIANT-INTERCHANGE CONFIGURATION FACTOR PROGRAM

                                C O N F A C   I I

          NAA CONFAC II REPORT SAMPLE PROBLEMS GROUP B   K.A.TOUPS,7/31/65

                                I N P U T   D A T A


***** DATA NAME- *1PLAT1       * A SKEWED RECTANGULAR SURFACE

POINT        X              Y              Z              POINT        X              Y              Z
       0.4131757E 01  0.3000000E 01  0.7496139E 01---(INTERNALLY GENERATED ORIENTATION VECTOR)
   1   0.5000000E 01  0.3000000E 01  0.7000000E 01        2   0.5000000E 01  0.9000000E 01  0.7000000E 01
   3   0.1000000E 01  0.9000000E 01  0.0000000E-38        4   0.1000000E 01  0.3000000E 01  0.0000000E-38


***** DATA NAME- *3DISK        * OCTAGONAL POLYGON

SURFACE SPECIFICATIONS-

NO OF X-SECTIONS =  1          NO OF X-SECTION BOUNDARY DIVISIONS =  8

LOCATION OF VERTICAL CENTERLINE, X= 0.0000000E-38, Y= 0.0000000E-38

X-SECTION NO.      X-AXIS RADIUS      Y-AXIS RADIUS      ELEVATION ABOVE XY PLANE
     1             0.3000000E 01      0.3000000E 01      0.1000000E 01

THE FOLLOWING INTERNALLY GENERATED SURFACE DATA RESULTED FROM THE ABOVE SPECIFICATIONS-

POINT        X              Y              Z              POINT        X              Y              Z
       0.3000000E 01  0.0000000E-38  0.2000000E 01---(INTERNALLY GENERATED ORIENTATION VECTOR)
   1   0.3000000E 01  0.0000000E-38  0.1000000E 01        2   0.2121320E 01  0.2121320E 01  0.1000000E 01
   3   0.9459100E-13  0.3000000E 01  0.1000000E 01        4  -0.2121320E 01  0.2121320E 01  0.1000000E 01
   5  -0.3000000E 01  0.1888489E-12  0.1000000E 01        6  -0.2121320E 01 -0.2121320E 01  0.1000000E 01
   7  -0.2831069E-12 -0.3000000E 01  0.1000000E 01        8   0.2121320E 01 -0.2121320E 01  0.1000000E 01
```

Figure 23. Group B Sample Problems Program Results (Sheet 1 of 27)

```
***** DATA NAME- *0TDISK        * TRANSFORMS 3DISK TO SKEWED POSITION IN II QUADRANT

TRANSFORMATION DATA-

POINT        X              Y              Z              POINT        X              Y              Z
   1  -0.1939340E 01  0.6181981E 01  0.6598075E 01          3  -0.5121320E 01  0.5121320E 01  0.9196150E 01
   7  -0.3000000E 01  0.3000000E 01  0.4000000E 01
```

Figure 23. Group B Sample Problems Program Results (Sheet 2 of 27)

```
                    NAA CONFAC II REPORT SAMPLE PROBLEMS GROUP B   K.A.TOUPS,7/31/65


RUN NO.   1   DATA USED FOR THIS RUN- *1PLAT1*3DISK *
                                      *      *      *
                                      *D     *      *

THE FORM FACTOR FROM SURFACE *1PLAT1      * TO SURFACE *3DISK       * = 0.00954

THE EXCHANGE COEFFICIENT (EA)=   0.46132E 00 SQ UNITS

                  THE MAPPING AREA = 0.4146303E 02 SQ UNITS


ONLY A PART OF SURFACE *1PLAT1      * SEES SURFACE *3DISK       *
THE AREA OF THAT PART IS  0.4146304E 02 SQ UNITS.
THE AREA OF THE TOTAL SURFACE IS  0.4837355E 02 SQ UNITS.


ONLY A PART OF SURFACE *3DISK       * SEES SURFACE *1PLAT1      *
THE AREA OF THAT PART IS  0.2113364E 02 SQ UNITS.
THE AREA OF THE TOTAL SURFACE IS  0.2545584E 02 SQ UNITS.

THE FORM FACTOR FROM SURFACE *3DISK       * TO SURFACE *1PLAT1      * = 0.01812


THE FOLLOWING ARE THE (FINAL) SURFACE COORDINATES USED FOR THE FACTOR COMPUTATION-


***** DATA NAME- *1PLAT1      *

POINT       X              Y              Z            POINT       X              Y              Z
       0.0000000E-38 -0.0000000E-38  0.9999999E 00---(INTERNALLY GENERATED ORIENTATION VECTOR)
   1   0.0000000E-38 -0.0000000E-38  0.0000000E-38       2   0.6000000E 01 -0.0000000E-38  0.0000000E-38
   3   0.6000000E 01  0.6910506E 01  0.0000000E-38       4   0.0000000E-38  0.6910506E 01  0.0000000E-38


***** DATA NAME- *3DISK       *

POINT       X              Y              Z            POINT       X              Y              Z
```

Figure 23. Group B Sample Problems Program Results (Sheet 3 of 27)

```
    -0.6509069E 00  0.6042263E 01  0.4961389E 00---(INTERNALLY GENERATED ORIENTATION VECTOR)
 1  -0.6509069E 00  0.6910506E 01  0.0000000E-38      2   0.0000000E-38  0.7690153E 01  0.1364382E 01
 3  -0.8706797E 00  0.8742623E 01  0.3206204E 01      4  -0.3000000E 01  0.9178570E 01  0.3969111E 01
 5  -0.5121320E 01  0.8742623E 01  0.3206203E 01      6  -0.6000000E 01  0.7690153E 01  0.1364382E 01
 7  -0.5349093E 01  0.6910506E 01  0.0000000E-38

COORDINATES OF POINTS ON BOUNDARY OF SURF    *1PLAT1      * FOR EACH Y INTERVAL

     X-LEFT          X-RIGHT          Y                      X-LEFT          X-RIGHT          Y

 0.0000000E-38  0.6000000E 01 -0.0000000E-38          0.0000000E-38  0.6000000E 01  0.2879378E 00
 0.0000000E-38  0.6000000E 01  0.5758755E 00          0.0000000E-38  0.6000000E 01  0.8638133E 00
 0.0000000E-38  0.6000000E 01  0.1151751E 01          0.0000000E-38  0.6000000E 01  0.1439689E 01
 0.0000000E-38  0.6000000E 01  0.1727627E 01          0.0000000E-38  0.6000000E 01  0.2015564E 01
 0.0000000E-38  0.6000000E 01  0.2303502E 01          0.0000000E-38  0.6000000E 01  0.2591440E 01
 0.0000000E-38  0.6000000E 01  0.2879377E 01          0.0000000E-38  0.6000000E 01  0.3167315E 01
 0.0000000E-38  0.6000000E 01  0.3455253E 01          0.0000000E-38  0.6000000E 01  0.3743191E 01
 0.0000000E-38  0.6000000E 01  0.4031128E 01          0.0000000E-38  0.6000000E 01  0.4319066E 01
 0.0000000E-38  0.6000000E 01  0.4607004E 01          0.0000000E-38  0.6000000E 01  0.4894941E 01
 0.0000000E-38  0.6000000E 01  0.5182879E 01          0.0000000E-38  0.6000000E 01  0.5470817E 01
 0.0000000E-38  0.6000000E 01  0.5758755E 01          0.0000000E-38  0.6000000E 01  0.6046692E 01
 0.0000000E-38  0.6000000E 01  0.6334630E 01          0.0000000E-38  0.6000000E 01  0.6622568E 01
 0.0000000E-38  0.6000000E 01  0.6910506E 01

NO. OF HORIZONTAL INCREMENTS= 24  NO. OF VERTICAL INCREMENTS= 24

THE FOLLOWING ARE PLANE POINT CONFIGURATION FACTORS COMPUTED FOR THIS RUN
LOWEST GRID LINE FIRST, FROM X-LEFT TO X-RIGHT.

 0.1059386E-01  0.1024097E-01  0.9877518E-02  0.9506420E-02  0.9130520E-02  0.8752479E-02
 0.8374779E-02  0.7998693E-02  0.7629238E-02  0.7265236E-02  0.6909217E-02  0.6562509E-02
 0.6226191E-02  0.5901132E-02  0.5587986E-02  0.5287223E-02  0.4999154E-02  0.4723924E-02
 0.4461553E-02  0.4211956E-02  0.3974935E-02  0.3750230E-02  0.3537515E-02  0.3336410E-02
 0.3146497E-02
 0.1145885E-01  0.1105647E-01  0.1064296E-01  0.1022180E-01  0.9796301E-02  0.9369556E-02
 0.8944450E-02  0.8523561E-02  0.8109183E-02  0.7703336E-02  0.7307712E-02  0.6923741E-02
 0.6552555E-02  0.6195040E-02  0.5851822E-02  0.5523327E-02  0.5209775E-02  0.4911236E-02
 0.4627615E-02  0.4356698E-02  0.4104187E-02  0.3863682E-02  0.3636736E-02  0.3422840E-02
 0.3221462E-02
 0.1241370E-01  0.1195360E-01  0.1148193E-01  0.1100278E-01  0.1052006E-01  0.1003737E-01
```

Figure 23. Group B Sample Problems Program Results (Sheet 4 of 27)

0.9558029E-02	0.9084977E-02	0.8620835E-02	0.8167812E-02	0.7727790E-02	0.7302275E-02
0.6892434E-02	0.6499135E-02	0.6122975E-02	0.5764285E-02	0.5423172E-02	0.5099565E-02
0.4793233E-02	0.4503826E-02	0.4230870E-02	0.3973815E-02	0.3732057E-02	0.3504947E-02
0.3291803E-02					
0.1346931E-01	0.1294174E-01	0.1240230E-01	0.1185584E-01	0.1130695E-01	0.1075984E-01
0.1021834E-01	0.9685838E-02	0.9165246E-02	0.8659045E-02	0.8169241E-02	0.7697430E-02
0.7244788E-02	0.6812141E-02	0.6399968E-02	0.6008488E-02	0.5637659E-02	0.5287208E-02
0.4956732E-02	0.4645679E-02	0.4353382E-02	0.4079093E-02	0.3822035E-02	0.3581368E-02
0.3356243E-02					
0.1463810E-01	0.1403141E-01	0.1341276E-01	0.1278795E-01	0.1216235E-01	0.1154093E-01
0.1092811E-01	0.1032774E-01	0.9743105E-02	0.9176926E-02	0.8631346E-02	0.8108005E-02
0.7608050E-02	0.7132197E-02	0.6680797E-02	0.6253841E-02	0.5851094E-02	0.5472045E-02
0.5116037E-02	0.4782271E-02	0.4469830E-02	0.4177748E-02	0.3905007E-02	0.3650560E-02
0.3413367E-02					
0.1593417E-01	0.1523436E-01	0.1452285E-01	0.1380655E-01	0.1309184E-01	0.1238453E-01
0.1168972E-01	0.1101183E-01	0.1035450E-01	0.9720699E-02	0.9112681E-02	0.8532074E-02
0.7979943E-02	0.7456819E-02	0.6962807E-02	0.6497664E-02	0.6060812E-02	0.5651473E-02
0.5268647E-02	0.4911217E-02	0.4578002E-02	0.4267714E-02	0.3979071E-02	0.3710792E-02
0.3461588E-02					
0.1737342E-01	0.1655366E-01	0.1574295E-01	0.1491953E-01	0.1410103E-01	0.1329423E-01
0.1250507E-01	0.1173854E-01	0.1099870E-01	0.1028872E-01	0.9610908E-02	0.8966815E-02
0.8357310E-02	0.7782646E-02	0.7242616E-02	0.6736566E-02	0.6263541E-02	0.5822340E-02
0.5411590E-02	0.5029776E-02	0.4675318E-02	0.4346622E-02	0.4042072E-02	0.3760095E-02
0.3499133E-02					
0.1897387E-01	0.1803381E-01	0.1708419E-01	0.1613499E-01	0.1519529E-01	0.1427308E-01
0.1337519E-01	0.1250729E-01	0.1167383E-01	0.1087813E-01	0.1012247E-01	0.9408214E-02
0.8735864E-02	0.8105339E-02	0.7515873E-02	0.6966339E-02	0.6455255E-02	0.5980893E-02
0.5541360E-02	0.5134683E-02	0.4758830E-02	0.4411799E-02	0.4091598E-02	0.3796296E-02
0.3524069E-02					
0.2075583E-01	0.1966070E-01	0.1855842E-01	0.1746107E-01	0.1637950E-01	0.1532312E-01
0.1429984E-01	0.1331600E-01	0.1237640E-01	0.1148446E-01	0.1064225E-01	0.9850765E-02
0.9110029E-02	0.8419281E-02	0.7777155E-02	0.7181816E-02	0.6631101E-02	0.6122610E-02
0.5653835E-02	0.5222205E-02	0.4825174E-02	0.4460220E-02	0.4124943E-02	0.3817024E-02
0.3534272E-02					
0.2274213E-01	0.2146168E-01	0.2017788E-01	0.1890543E-01	0.1765736E-01	0.1644480E-01
0.1527682E-01	0.1416044E-01	0.1310077E-01	0.1210108E-01	0.1116307E-01	0.1028709E-01
0.9472399E-02	0.8717370E-02	0.8019717E-02	0.7376708E-02	0.6785287E-02	0.6242233E-02
0.5744261E-02	0.5288098E-02	0.4870545E-02	0.4488538E-02	0.4139163E-02	0.3819674E-02
0.3527484E-02					
0.2495825E-01	0.2345529E-01	0.2195475E-01	0.2047465E-01	0.1903072E-01	0.1763607E-01
0.1630109E-01	0.1503245E-01	0.1383831E-01	0.1271855E-01	0.1167514E-01	0.1070744E-01
0.9813567E-02	0.8990683E-02	0.8235282E-02	0.7543434E-02	0.6910975E-02	0.6333627E-02
0.5807184E-02	0.5327529E-02	0.4890725E-02	0.4493054E-02	0.4131038E-02	0.3801454E-02

Figure 23. Group B Sample Problems Program Results (Sheet 5 of 27)

0.3501314E-02					
0.2743236E-01	0.2566083E-01	0.2390030E-01	0.2217307E-01	0.2049820E-01	0.1889112E-01
0.1736357E-01	0.1592370E-01	0.1457640E-01	0.1332371E-01	0.1216533E-01	0.1109915E-01
0.1012160E-01	0.9228203E-02	0.8413824E-02	0.7673003E-02	0.7000148E-02	0.6389745E-02
0.5836444E-02	0.5335154E-02	0.4881084E-02	0.4460784E-02	0.4097163E-02	0.3759459E-02
0.3453235E-02					
0.3019508E-01	0.2803746E-01	0.2602353E-01	0.2400110E-01	0.2205335E-01	0.2019839E-01
0.1844924E-01	0.1691412E-01	0.1529707E-01	0.1389858E-01	0.1261633E-01	0.1144595E-01
0.1038157E-01	0.9416464E-02	0.8543355E-02	0.7754845E-02	0.7043611E-02	0.6402615E-02
0.5825193E-02	0.5305111E-02	0.4836628E-02	0.4414497E-02	0.4033942E-02	0.3690643E-02
0.3380714E-02					
0.3327853E-01	0.3078258E-01	0.2832877E-01	0.2595242E-01	0.2368178E-01	0.2153789E-01
0.1953471E-01	0.1767980E-01	0.1597531E-01	0.1441903E-01	0.1300557E-01	0.1172727E-01
0.1057508E-01	0.9539227E-02	0.8609729E-02	0.7776774E-02	0.7030940E-02	0.6363384E-02
0.5765933E-02	0.5231091E-02	0.4752074E-02	0.4322772E-02	0.3937692E-02	0.3591955E-02
0.3281211E-02					
0.3671609E-01	0.3372867E-01	0.3081164E-01	0.2800948E-01	0.2535664E-01	0.2287701E-01
0.2058464E-01	0.1848501E-01	0.1657668E-01	0.1485305E-01	0.1330411E-01	0.1191746E-01
0.1067974E-01	0.9577262E-02	0.8596595E-02	0.7724983E-02	0.6950548E-02	0.6262399E-02
0.5650661E-02	0.5106490E-02	0.4621977E-02	0.4190124E-02	0.3804745E-02	0.3460399E-02
0.3152279E-02					
0.4053585E-01	0.3693769E-01	0.3345215E-01	0.3013632E-01	0.2703178E-01	0.2416459E-01
0.2154689E-01	0.1917949E-01	0.1705471E-01	0.1515905E-01	0.1347543E-01	0.1198512E-01
0.1066894E-01	0.9508238E-02	0.8485388E-02	0.7584176E-02	0.6789912E-02	0.6089440E-02
0.5471084E-02	0.4924569E-02	0.4440891E-02	0.4012189E-02	0.3631596E-02	0.3293144E-02
0.2991656E-02					
0.4475520E-01	0.4039031E-01	0.3620258E-01	0.3226653E-01	0.2863112E-01	0.2532207E-01
0.2234570E-01	0.1969364E-01	0.1734764E-01	0.1528351E-01	0.1347431E-01	0.1189255E-01
0.1051166E-01	0.9304877E-02	0.8255677E-02	0.7337931E-02	0.6535879E-02	0.5834017E-02
0.5212864E-02	0.4676752E-02	0.4203636E-02	0.3784869E-02	0.3415019E-02	0.3087694E-02
0.2797403E-02					
0.4936860E-01	0.4402565E-01	0.3896590E-01	0.3428337E-01	0.3003200E-01	0.2623096E-01
0.2287289E-01	0.1993267E-01	0.1737491E-01	0.1515962E-01	0.1324621E-01	0.1159585E-01
0.1017292E-01	0.8945536E-02	0.7885736E-02	0.6969251E-02	0.6175244E-02	0.5435906E-02
0.4886100E-02	0.4362941E-02	0.3905528E-02	0.3504609E-02	0.3152327E-02	0.2842016E-02
0.2568003E-02					
0.5430406E-01	0.4770079E-01	0.4155646E-01	0.3598643E-01	0.3103996E-01	0.2671527E-01
0.2297686E-01	0.1977050E-01	0.1703437E-01	0.1470620E-01	0.1272752E-01	0.1104574E-01
0.9614828E-02	0.8395292E-02	0.7353603E-02	0.6461543E-02	0.5695500E-02	0.5035737E-02
0.4465801E-02	0.3971965E-02	0.3542772E-02	0.3168635E-02	0.2841522E-02	0.2554703E-02
0.2302496E-02					
0.5935639E-01	0.5110827E-01	0.4362728E-01	0.3703649E-01	0.3135156E-01	0.2651930E-01
0.2245086E-01	0.1904488E-01	0.1620135E-01	0.1382690E-01	0.1184768E-01	0.1018986E-01

Figure 23. Group B Sample Problems Program Results (Sheet 6 of 27)

0.8798835E-02	0.7627690E-02	0.6638683E-02	0.5799884E-02	0.5085899E-02	0.4475825E-02
0.3952557E-02	0.3502067E-02	0.3112810E-02	0.2775278E-02	0.2481584E-02	0.2225187E-02
0.2000636E-02					
0.6399733E-01	0.5360086E-01	0.4453608E-01	0.3686799E-01	0.3050484E-01	0.2528390E-01
0.2102489E-01	0.1755737E-01	0.1473235E-01	0.1242513E-01	0.1053395E-01	0.8977029E-02
0.7689149E-02	0.6618486E-02	0.5723888E-02	0.4972661E-02	0.4338704E-02	0.3801154E-02
0.3343236E-02	0.2951426E-02	0.2614740E-02	0.2324248E-02	0.2072635E-02	0.1853875E-02
0.1663003E-02					
0.6689905E-01	0.5381548E-01	0.4311005E-01	0.3456716E-01	0.2782883E-01	0.2253426E-01
0.1837075E-01	0.1508469E-01	0.1247712E-01	0.1039467E-01	0.8720071E-02	0.7363858E-02
0.6257716E-02	0.5349311E-02	0.4598323E-02	0.3973521E-02	0.3450555E-02	0.3010315E-02
0.2637692E-02	0.2320689E-02	0.2049683E-02	0.1816937E-02	0.1616183E-02	0.1442298E-02
0.1291100E-02					
0.6462941E-01	0.4890994E-01	0.3730369E-01	0.2876141E-01	0.2243617E-01	0.1770875E-01
0.1413779E-01	0.1141016E-01	0.9303229E-02	0.7657762E-02	0.6359040E-02	0.5323672E-02
0.4490437E-02	0.3813941E-02	0.3260169E-02	0.2803374E-02	0.2423887E-02	0.2106525E-02
0.1839464E-02	0.1613444E-02	0.1421105E-02	0.1256605E-02	0.1115244E-02	0.9932196E-03
0.8874382E-03					
0.4830589E-01	0.3344462E-01	0.2400338E-01	0.1770991E-01	0.1336352E-01	0.1027889E-01
0.8039962E-02	0.6382844E-02	0.5134826E-02	0.4180048E-02	0.3439171E-02	0.2856827E-02
0.2393724E-02	0.2021514E-02	0.1719461E-02	0.1472163E-02	0.1268050E-02	0.1098325E-02
0.9562233E-03	0.8364910E-03	0.7350099E-03	0.6485268E-03	0.5744461E-03	0.5106859E-03
0.4555605E-03					
0.5928984E-08	0.6818331E-08	0.8893475E-08	0.5632534E-08	0.1037572E-08	0.4002064E-08
0.1185797E-08	0.1334021E-08	0.0000000E-38	0.1482246E-08	0.7411230E-09	0.0000000E-38
-0.0000000E-38	0.0000000E-38	0.2371593E-08	0.4446738E-09	0.0000000E-38	0.0000000E-38
0.0000000E-38	0.0000000E-38	0.1185797E-08	0.0000000E-38	0.0000000E-38	0.2371593E-08
0.0000000E-38					

Figure 23. Group B Sample Problems Program Results (Sheet 7 of 27)

```
                    NAA CONFAC II REPORT SAMPLE PROBLEMS GROUP B   K.A.TOUPS,7/31/65


RUN NO.   2   DATA USED FOR THIS RUN- *3DISK *1PLAT1*
                                      *      *      *
                                      *      *      *

THE FORM FACTOR FROM SURFACE *3DISK       * TO SURFACE *1PLAT1      * = 0.01815

THE EXCHANGE COEFFICIENT (EA)=   0.46198E 00 SQ UNITS

                  THE MAPPING AREA = 0.2112592E 02 SQ UNITS


ONLY A PART OF SURFACE *3DISK       * SEES SURFACE *1PLAT1      *
THE AREA OF THAT PART IS  0.2113364E 02 SQ UNITS.
THE AREA OF THE TOTAL SURFACE IS  0.2545584E 02 SQ UNITS.


ONLY A PART OF SURFACE *1PLAT1      * SEES SURFACE *3DISK       *
THE AREA OF THAT PART IS  0.4146304E 02 SQ UNITS.
THE AREA OF THE TOTAL SURFACE IS  0.4837355E 02 SQ UNITS.

THE FORM FACTOR FROM SURFACE *1PLAT1      * TO SURFACE *3DISK       * = 0.00955


THE FOLLOWING ARE THE (FINAL) SURFACE COORDINATES USED FOR THE FACTOR COMPUTATION-


***** DATA NAME- *3DISK       *

POINT        X              Y              Z              POINT        X              Y              Z
        0.0000000E-38  0.0000000E-38  0.1000000E 01---(INTERNALLY GENERATED ORIENTATION VECTOR)
   1    0.0000000E-38  0.0000000E-38 -0.0000000E-38        2    0.1700902E 01  0.0000000E-38 -0.0000000E-38
   3    0.3324490E 01  0.1623586E 01 -0.0000000E-38        4    0.3324490E 01  0.3919689E 01 -0.0000000E-38
   5    0.1700902E 01  0.5543277E 01 -0.0000000E-38        6   -0.5951984E 00  0.5543277E 01 -0.0000000E-38
   7   -0.1797918E 01  0.4340558E 01 -0.0000000E-38


***** DATA NAME- *1PLAT1      *
```

Figure 23. Group B Sample Problems Program Results (Sheet 8 of 27)

```
POINT        X              Y              Z              POINT        X              Y              Z
      -0.2116344E 01 -0.1581155E 01  0.6496139E 01---(INTERNALLY GENERATED ORIENTATION VECTOR)
   1  -0.2918496E 01 -0.1913417E 01  0.6000000E 01        2  -0.6223951E 00 -0.7456694E 01  0.6000000E 01
   3   0.2545192E 01 -0.6144637E 01  0.0000000E-38        4   0.2490914E 00 -0.6013597E 00  0.0000000E-38

COORDINATES OF POINTS ON BOUNDARY OF SURF    *3DISK        * FOR EACH Y INTERVAL

      X-LEFT          X-RIGHT          Y                      X-LEFT          X-RIGHT          Y

  0.0000000E-38  0.1700902E 01  0.0000000E-38            -0.9567085E-01  0.1931872E 01  0.2309699E 00
 -0.1913417E 00  0.2162842E 01  0.4619398E 00            -0.2870126E 00  0.2393812E 01  0.6929096E 00
 -0.3826834E 00  0.2624782E 01  0.9238795E 00            -0.4783543E 00  0.2855752E 01  0.1154849E 01
 -0.5740251E 00  0.3086721E 01  0.1385819E 01            -0.6696960E 00  0.3317691E 01  0.1616789E 01
 -0.7653668E 00  0.3324490E 01  0.1847759E 01            -0.8610377E 00  0.3324490E 01  0.2078729E 01
 -0.9567085E 00  0.3324490E 01  0.2309699E 01            -0.1052379E 01  0.3324490E 01  0.2540669E 01
 -0.1148050E 01  0.3324490E 01  0.2771639E 01            -0.1243721E 01  0.3324490E 01  0.3002608E 01
 -0.1339392E 01  0.3324490E 01  0.3233578E 01            -0.1435063E 01  0.3324490E 01  0.3464548E 01
 -0.1530734E 01  0.3324490E 01  0.3695518E 01            -0.1626405E 01  0.3317691E 01  0.3926488E 01
 -0.1722075E 01  0.3086722E 01  0.4157458E 01            -0.1750048E 01  0.2855752E 01  0.4388428E 01
 -0.1519078E 01  0.2624782E 01  0.4619397E 01            -0.1288108E 01  0.2393812E 01  0.4850367E 01
 -0.1057138E 01  0.2162842E 01  0.5081337E 01            -0.8261685E 00  0.1931872E 01  0.5312307E 01
 -0.5951984E 00  0.1700902E 01  0.5543277E 01

NO. OF HORIZONTAL INCREMENTS= 24  NO. OF VERTICAL INCREMENTS= 24

THE FOLLOWING ARE PLANE POINT CONFIGURATION FACTORS COMPUTED FOR THIS RUN
LOWEST GRID LINE FIRST, FROM X-LEFT TO X-RIGHT.

  0.0000000E-38   0.1011853E-01   0.2005937E-01   0.2957023E-01   0.3842511E-01   0.4645351E-01
  0.5355685E-01   0.5970795E-01   0.6493755E-01   0.6931489E-01   0.7292915E-01   0.7587533E-01
  0.7824513E-01   0.8012216E-01   0.8158001E-01   0.8268203E-01   0.8348208E-01   0.8402561E-01
  0.8435085E-01   0.8448995E-01   0.8446994E-01   0.8431364E-01   0.8404034E-01   0.8366645E-01
  0.8320594E-01
  0.0000000E-38   0.8153682E-02   0.1620880E-01   0.2400305E-01   0.3138345E-01   0.3822175E-01
  0.4442571E-01   0.4994393E-01   0.5476371E-01   0.5890410E-01   0.6240645E-01   0.6532536E-01
  0.6772117E-01   0.6965455E-01   0.7118316E-01   0.7235984E-01   0.7323180E-01   0.7384059E-01
  0.7422241E-01   0.7440856E-01   0.7442606E-01   0.7429817E-01   0.7404490E-01   0.7368351E-01
  0.7322892E-01
  0.2371593E-08   0.6932360E-02   0.1380240E-01   0.2048838E-01   0.2687289E-01   0.3285275E-01
  0.3834710E-01   0.4330212E-01   0.4769192E-01   0.5151560E-01   0.5479226E-01   0.5755506E-01
```

Figure 23. Group B Sample Problems Program Results (Sheet 9 of 27)

```
0.5984560E-01  0.6170936E-01  0.6319226E-01  0.6433846E-01  0.6518901E-01  0.6578126E-01
0.6614862E-01  0.6632067E-01  0.6632344E-01  0.6617972E-01  0.6590941E-01  0.6552984E-01
0.6505617E-01
0.1185797E-08  0.6066828E-02  0.1209266E-01  0.1797825E-01  0.2362667E-01  0.2895043E-01
0.3387773E-01  0.3835692E-01  0.4235751E-01  0.4586970E-01  0.4890109E-01  0.5147268E-01
0.5361458E-01  0.5536225E-01  0.5675338E-01  0.5782561E-01  0.5861509E-01  0.5915554E-01
0.5947773E-01  0.5960964E-01  0.5957593E-01  0.5939869E-01  0.5909737E-01  0.5868909E-01
0.5818891E-01
0.2371593E-08  0.5403148E-02  0.1077991E-01  0.1604524E-01  0.2111539E-01  0.2591350E-01
0.3037474E-01  0.3445001E-01  0.3810771E-01  0.4133354E-01  0.4412863E-01  0.4650655E-01
0.4849201E-01  0.5010765E-01  0.5139127E-01  0.5237367E-01  0.5308718E-01  0.5356253E-01
0.5382835E-01  0.5391085E-01  0.5383368E-01  0.5361805E-01  0.5328287E-01  0.5284490E-01
0.5231893E-01
0.0000000E-38  0.4867718E-02  0.9720069E-02  0.1448181E-01  0.1907838E-01  0.2344059E-01
0.2750898E-01  0.3123704E-01  0.3459313E-01  0.3756066E-01  0.4013682E-01  0.4233042E-01
0.4415913E-01  0.4564675E-01  0.4682079E-01  0.4771038E-01  0.4834479E-01  0.4875240E-01
0.4895994E-01  0.4899219E-01  0.4887176E-01  0.4861905E-01  0.4825239E-01  0.4778809E-01
0.4724063E-01
0.2371593E-08  0.4420662E-02  0.8834777E-02  0.1317433E-01  0.1737160E-01  0.2136324E-01
0.2503399E-01  0.2851974E-01  0.3160930E-01  0.3434487E-01  0.3672118E-01  0.3874379E-01
0.4042681E-01  0.4179053E-01  0.4285915E-01  0.4365898E-01  0.4421688E-01  0.4455923E-01
0.4471121E-01  0.4469633E-01  0.4453622E-01  0.4425055E-01  0.4385703E-01  0.4337153E-01
0.4280816E-01
0.2371593E-08  0.4038321E-02  0.8077422E-02  0.1205490E-01  0.1590838E-01  0.1957911E-01
0.2301531E-01  0.2617499E-01  0.2902763E-01  0.3155482E-01  0.3374969E-01  0.3561552E-01
0.3716381E-01  0.3841219E-01  0.3938232E-01  0.4009823E-01  0.4058482E-01  0.4086682E-01
0.4096804E-01  0.4091090E-01  0.4071613E-01  0.4040269E-01  0.3998770E-01  0.3948656E-01
0.3891297E-01
0.0000000E-38  0.3512399E-02  0.7033768E-02  0.1051489E-01  0.1390614E-01  0.1715997E-01
0.2023328E-01  0.2308956E-01  0.2570035E-01  0.2804607E-01  0.3011602E-01  0.3190773E-01
0.3342587E-01  0.3468034E-01  0.3568732E-01  0.3646285E-01  0.3702664E-01  0.3739861E-01
0.3759860E-01  0.3764530E-01  0.3755843E-01  0.3735348E-01  0.3704661E-01  0.3665211E-01
0.3618290E-01
0.1185797E-08  0.3076316E-02  0.6166940E-02  0.9232371E-02  0.1223250E-01  0.1512837E-01
0.1788395E-01  0.2046759E-01  0.2285377E-01  0.2502295E-01  0.2696275E-01  0.2865734E-01
0.3013687E-01  0.3137660E-01  0.3239588E-01  0.3320713E-01  0.3382483E-01  0.3426467E-01
0.3454285E-01  0.3467555E-01  0.3467849E-01  0.3456664E-01  0.3435408E-01  0.3405386E-01
0.3367797E-01
0.1185797E-08  0.2714044E-02  0.5445834E-02  0.8163063E-02  0.1083275E-01  0.1342255E-01
0.1590200E-01  0.1824383E-01  0.2042491E-01  0.2242699E-01  0.2423713E-01  0.2584763E-01
0.2725561E-01  0.2846342E-01  0.2947596E-01  0.3030191E-01  0.3095198E-01  0.3143837E-01
0.3177415E-01  0.3197230E-01  0.3204770E-01  0.3201194E-01  0.3187801E-01  0.3165768E-01
0.3136195E-01
```

Figure 23. Group B Sample Problems Program Results (Sheet 10 of 27)

0.0000000E-38	0.2409347E-02	0.4838601E-02	0.7260943E-02	0.9648863E-02	0.1197513E-01
0.1421382E-01	0.1634120E-01	0.1833667E-01	0.2018332E-01	0.2186833E-01	0.2333316E-01
0.2472337E-01	0.2588834E-01	0.2688081E-01	0.2770630E-01	0.2837255E-01	0.2888891E-01
0.2926584E-01	0.2951442E-01	0.2964601E-01	0.2967188E-01	0.2960303E-01	0.2945002E-01
0.2922280E-01					
0.1185797E-08	0.2150391E-02	0.4321987E-02	0.6492228E-02	0.8637886E-02	0.1073581E-01
0.1276369E-01	0.1470087E-01	0.1652894E-01	0.1823241E-01	0.1979899E-01	0.2121980E-01
0.2248941E-01	0.2360564E-01	0.2456925E-01	0.2538356E-01	0.2605397E-01	0.2658757E-01
0.2699261E-01	0.2727818E-01	0.2745378E-01	0.2752912E-01	0.2751380E-01	0.2741719E-01
0.2724826E-01					
0.2371593E-08	0.1928354E-02	0.3878601E-02	0.5831562E-02	0.7767422E-02	0.9666291E-02
0.1150887E-01	0.1327701E-01	0.1495433E-01	0.1652667E-01	0.1798243E-01	0.1931278E-01
0.2051177E-01	0.2157618E-01	0.2250539E-01	0.2330108E-01	0.2396687E-01	0.2450801E-01
0.2493095E-01	0.2524307E-01	0.2545233E-01	0.2556697E-01	0.2559537E-01	0.2554580E-01
0.2542628E-01					
0.3557390E-08	0.1736513E-02	0.3495178E-02	0.5259537E-02	0.7012531E-02	0.8736946E-02
0.1041595E-01	0.1203355E-01	0.1357511E-01	0.1502773E-01	0.1638056E-01	0.1762505E-01
0.1875499E-01	0.1976656E-01	0.2065815E-01	0.2143024E-01	0.2208508E-01	0.2262644E-01
0.2305935E-01	0.2338971E-01	0.2362415E-01	0.2376967E-01	0.2383352E-01	0.2382297E-01
0.2374519E-01					
0.1185797E-08	0.1569654E-02	0.3161413E-02	0.4761045E-02	0.6353739E-02	0.7924499E-02
0.9458547E-02	0.1094173E-01	0.1236093E-01	0.1370440E-01	0.1496209E-01	0.1612578E-01
0.1718926E-01	0.1814832E-01	0.1900072E-01	0.1974603E-01	0.2038545E-01	0.2092162E-01
0.2135833E-01	0.2170033E-01	0.2195308E-01	0.2212252E-01	0.2221488E-01	0.2223653E-01
0.2219386E-01					
0.5928984E-09	0.1423678E-02	0.2869186E-02	0.4324139E-02	0.5775602E-02	0.7210411E-02
0.8615532E-02	0.9978371E-02	0.1128715E-01	0.1253118E-01	0.1370114E-01	0.1478925E-01
0.1578940E-01	0.1669720E-01	0.1750997E-01	0.1822663E-01	0.1884758E-01	0.1937456E-01
0.1981038E-01	0.2015880E-01	0.2042433E-01	0.2061193E-01	0.2072700E-01	0.2077509E-01
0.2076185E-01					
0.1185797E-08	0.1293504E-02	0.2608372E-02	0.3933796E-02	0.5258462E-02	0.6570801E-02
0.7859296E-02	0.9112752E-02	0.1032059E-01	0.1147312E-01	0.1256171E-01	0.1357908E-01
0.1451928E-01	0.1537783E-01	0.1615189E-01	0.1683978E-01	0.1744128E-01	0.1795740E-01
0.1839015E-01	0.1874244E-01	0.1901789E-01	0.1922067E-01	0.1935535E-01	0.1942677E-01
0.1943989E-01					
0.1185797E-08	0.1125653E-02	0.2270660E-02	0.3426780E-02	0.4585364E-02	0.5737535E-02
0.6874348E-02	0.7987023E-02	0.9067102E-02	0.1010667E-01	0.1109850E-01	0.1203620E-01
0.1291432E-01	0.1372845E-01	0.1447522E-01	0.1515234E-01	0.1575853E-01	0.1629348E-01
0.1675779E-01	0.1715280E-01	0.1748058E-01	0.1774373E-01	0.1794529E-01	0.1808867E-01
0.1817752E-01					
0.3389558E-03	0.1312964E-02	0.2301834E-02	0.3299424E-02	0.4299321E-02	0.5294934E-02
0.6279639E-02	0.7246873E-02	0.8190278E-02	0.9103812E-02	0.9981871E-02	0.1081937E-01
0.1161182E-01	0.1235542E-01	0.1304707E-01	0.1368439E-01	0.1426573E-01	0.1479015E-01

Figure 23. Group B Sample Problems Program Results (Sheet 11 of 27)

0.1525737E-01	0.1566771E-01	0.1602207E-01	0.1632181E-01	0.1656871E-01	0.1676491E-01
0.1691283E-01					
0.1864360E-02	0.2613827E-02	0.3425918E-02	0.4238626E-02	0.5047863E-02	0.5849535E-02
0.6639576E-02	0.7414014E-02	0.8169041E-02	0.8901034E-02	0.9606660E-02	0.1028285E-01
0.1092687E-01	0.1153636E-01	0.1210934E-01	0.1264421E-01	0.1313975E-01	0.1359516E-01
0.1400996E-01	0.1438406E-01	0.1471770E-01	0.1501139E-01	0.1526593E-01	0.1548233E-01
0.1566184E-01					
0.3015920E-02	0.3670362E-02	0.4323964E-02	0.4974271E-02	0.5618836E-02	0.6255226E-02
0.6881065E-02	0.7494047E-02	0.8091965E-02	0.8672745E-02	0.9234443E-02	0.9775269E-02
0.1029363E-01	0.1078810E-01	0.1125742E-01	0.1170061E-01	0.1211681E-01	0.1250540E-01
0.1286594E-01	0.1319819E-01	0.1350210E-01	0.1377776E-01	0.1402543E-01	0.1424552E-01
0.1443859E-01					
0.3996472E-02	0.4514200E-02	0.5028750E-02	0.5538713E-02	0.6042710E-02	0.6539381E-02
0.7027408E-02	0.7505521E-02	0.7972503E-02	0.8427203E-02	0.8868555E-02	0.9295546E-02
0.9707281E-02	0.1010294E-01	0.1048179E-01	0.1084321E-01	0.1118665E-01	0.1151170E-01
0.1181800E-01	0.1210531E-01	0.1237350E-01	0.1262248E-01	0.1285228E-01	0.1306301E-01
0.1325484E-01					
0.4776643E-02	0.5175037E-02	0.5569780E-02	0.5960127E-02	0.6345349E-02	0.6724749E-02
0.7097637E-02	0.7463349E-02	0.7821270E-02	0.8170797E-02	0.8511367E-02	0.8842452E-02
0.9163561E-02	0.9474265E-02	0.9774146E-02	0.1006285E-01	0.1034004E-01	0.1060548E-01
0.1085892E-01	0.1110016E-01	0.1132907E-01	0.1154556E-01	0.1174955E-01	0.1194102E-01
0.1212000E-01					
0.5383755E-02	0.5680030E-02	0.5973156E-02	0.6262784E-02	0.6548568E-02	0.6830167E-02
0.7107261E-02	0.7379539E-02	0.7646697E-02	0.7908460E-02	0.8164544E-02	0.8414702E-02
0.8658685E-02	0.8896273E-02	0.9127269E-02	0.9351472E-02	0.9568714E-02	0.9778840E-02
0.9981704E-02	0.1017721E-01	0.1036524E-01	0.1054570E-01	0.1071854E-01	0.1088371E-01
0.1104117E-01					

Figure 23. Group B Sample Problems Program Results (Sheet 12 of 27)

```
NAA CONFAC II REPORT SAMPLE PROBLEMS GROUP B   K.A.TOOPS,7/31/65


RUN NO.   3   DATA USED FOR THIS RUN- *1PLAT1*3DISK *
                                      *      *9TDISK*
                                      *      *      *

THE FORM FACTOR FROM SURFACE *1PLAT1      * TO SURFACE *3DISK 9TDISK* = 0.02579

THE EXCHANGE COEFFICIENT (FA)=   0.12476E 01 SQ UNITS

                 THE MAPPING AREA = 0.3686819E 02 SQ UNITS


ONLY A PART OF SURFACE *1PLAT1      * SEES SURFACE *3DISK 9TDISK*
THE AREA OF THAT PART IS  0.3686761E 02 SQ UNITS.
THE AREA OF THE TOTAL SURFACE IS  0.4837355E 02 SQ UNITS.

THE AREA OF SURFACE *3DISK 9TDISK* = 0.2545584E 02 SQ UNITS.

THE FORM FACTOR FROM SURFACE *3DISK 9TDISK* TO SURFACE *1PLAT1      * = 0.04901


THE FOLLOWING ARE THE (FINAL) SURFACE COORDINATES USED FOR THE FACTOR COMPUTATION-


***** DATA NAME- *1PLAT1      *

POINT        X              Y              Z            POINT       X              Y              Z
       0.0000000E-38  0.0000000E-38  0.1000000E 01---(INTERNALLY GENERATED ORIENTATION VECTOR)
   1  -0.0000000E-38 -0.0000000E-38 -0.0000000E-38       2   0.6000001E 01 -0.0000000E-38  0.0000000E-38
   3   0.6000001E 01  0.3692350E 01  0.0000000E-38       4   0.7340124E 00  0.8062259E 01  0.0000000E-38
   5   0.0000000E-38  0.8062259E 01  0.0000000E-38


***** DATA NAME- *3DISK 9TDISK*

POINT        X              Y              Z            POINT       X              Y              Z
       0.2569608E 01  0.3053902E 01  0.5542006E 01---(INTERNALLY GENERATED ORIENTATION VECTOR)
   1   0.3181981E 01  0.3791846E 01  0.5825624E 01       2   0.3310661E 01  0.2677147E 01  0.7927729E 01
```

Figure 23. Group B Sample Problems Program Results (Sheet 13 of 27)

```
  3   0.2121321E 01  0.3114788E 01  0.9877363E 01        4   0.3106612E 00  0.4365563E 01  0.1053246E 02
  5  -0.1060659E 01  0.5896784E 01  0.9509268E 01        6  -0.1189339E 01  0.6811483E 01  0.7407163E 01
  7   0.0000000E-33  0.6573841E 01  0.5457529E 01        8   0.1810661E 01  0.5323066E 01  0.4802434E 01

COORDINATES OF POINTS ON BOUNDARY OF SURF     *IPLAT1       * FOR EACH Y INTERVAL

      X-LEFT          X-RIGHT          Y                      X-LEFT          X-RIGHT          Y

 -0.0000000E-38  0.6000001E 01 -0.0000000E-38            0.0000000E-38  0.6000001E 01  0.3359274E 00
  0.0000000E-38  0.6000001E 01  0.6718549E 00            0.0000000E-38  0.6000001E 01  0.1007782E 01
  0.0000000E-38  0.6000001E 01  0.1343710E 01            0.0000000E-38  0.6000001E 01  0.1679637E 01
  0.0000000E-38  0.6000001E 01  0.2015565E 01            0.0000000E-38  0.6000001E 01  0.2351492E 01
  0.0000000E-38  0.6000001E 01  0.2687420E 01            0.0000000E-38  0.6000001E 01  0.3023347E 01
  0.0000000E-38  0.6000001E 01  0.3359274E 01            0.0000000E-38  0.6000001E 01  0.3695202E 01
  0.0000000E-38  0.5591752E 01  0.4031129E 01            0.0000000E-38  0.5186941E 01  0.4367057E 01
  0.0000000E-38  0.4782129E 01  0.4702984E 01            0.0000000E-38  0.4377318E 01  0.5038911E 01
  0.0000000E-38  0.3972506E 01  0.5374839E 01            0.0000000E-38  0.3567694E 01  0.5710766E 01
  0.0000000E-38  0.3162883E 01  0.6046694E 01            0.0000000E-38  0.2758071E 01  0.6382621E 01
  0.0000000E-38  0.2353260E 01  0.6718549E 01            0.0000000E-38  0.1948448E 01  0.7054476E 01
  0.0000000E-38  0.1543636E 01  0.7390403E 01            0.0000000E-38  0.1138825E 01  0.7726331E 01
  0.0000000E-38  0.7340124E 00  0.8062259E 01

NO. OF HORIZONTAL INCREMENTS= 24  NO. OF VERTICAL INCREMENTS= 24

THE FOLLOWING ARE PLANE POINT CONFIGURATION FACTORS COMPUTED FOR THIS RUN
LOWEST GRID LINE FIRST, FROM X-LEFT TO X-RIGHT.

  0.5559792E-01   0.5516989E-01   0.5456314E-01   0.5377759E-01   0.5281554E-01   0.5168178E-01
  0.5038360E-01   0.4893071E-01   0.4733510E-01   0.4561082E-01   0.4377370E-01   0.4184095E-01
  0.3983085E-01   0.3776222E-01   0.3565405E-01   0.3352504E-01   0.3139323E-01   0.2927561E-01
  0.2718784E-01   0.2514401E-01   0.2315650E-01   0.2123585E-01   0.1939074E-01   0.1762802E-01
  0.1595279E-01
  0.5792052E-01   0.5745776E-01   0.5630005E-01   0.5594723E-01   0.5490190E-01   0.5366945E-01
  0.5225819E-01   0.5067913E-01   0.4894593E-01   0.4707457E-01   0.4508302E-01   0.4299079E-01
  0.4081852E-01   0.3858738E-01   0.3631865E-01   0.3403316E-01   0.3175087E-01   0.2949041E-01
  0.2726882E-01   0.2510126E-01   0.2300084E-01   0.2097855E-01   0.1904325E-01   0.1720172E-01
  0.1545873E-01
  0.6012323E-01   0.5962030E-01   0.5890546E-01   0.5797852E-01   0.5684241E-01   0.5550332E-01
  0.5397064E-01   0.5225695E-01   0.5037776E-01   0.4835120E-01   0.4619762E-01   0.4393909E-01
  0.4159879E-01   0.3920040E-01   0.3676789E-01   0.3432404E-01   0.3189087E-01   0.2948870E-01
```

Figure 23. Group B Sample Problems Program Results (Sheet 14 of 27)

0.2713589E-01	0.2484856E-01	0.2264046E-01	0.2052289E-01	0.1850471E-01	0.1659246E-01
0.1479048E-01					
0.6215344E-01	0.6160377E-01	0.6082469E-01	0.5981605E-01	0.5858124E-01	0.5712731E-01
0.5546498E-01	0.5360857E-01	0.5157568E-01	0.4938685E-01	0.4706506E-01	0.4463513E-01
0.4212306E-01	0.3955530E-01	0.3695811E-01	0.3435686E-01	0.3177546E-01	0.2923583E-01
0.2675755E-01	0.2435761E-01	0.2205020E-01	0.1984674E-01	0.1775587E-01	0.1578369E-01
0.1393388E-01					
0.6395213E-01	0.6334793E-01	0.6249653E-01	0.6139792E-01	0.6005608E-01	0.5847911E-01
0.5667927E-01	0.5467281E-01	0.5247969E-01	0.5012311E-01	0.4762891E-01	0.4502488E-01
0.4233999E-01	0.3960354E-01	0.3684438E-01	0.3409021E-01	0.3136683E-01	0.2869769E-01
0.2610344E-01	0.2360167E-01	0.2120682E-01	0.1893017E-01	0.1677995E-01	0.1476152E-01
0.1287771E-01					
0.6545476E-01	0.6478692E-01	0.6385416E-01	0.6265672E-01	0.6119936E-01	0.5949143E-01
0.5754693E-01	0.5533433E-01	0.5302618E-01	0.5049857E-01	0.4783044E-01	0.4505272E-01
0.4219746E-01	0.3929686E-01	0.3638239E-01	0.3348393E-01	0.3062910E-01	0.2784264E-01
0.2514601E-01	0.2255719E-01	0.2009055E-01	0.1775694E-01	0.1556389E-01	0.1351581E-01
0.1161442E-01					
0.6659269E-01	0.6585082E-01	0.6482679E-01	0.6352131E-01	0.6194006E-01	0.6009391E-01
0.5799887E-01	0.5567586E-01	0.5315026E-01	0.5045129E-01	0.4761114E-01	0.4466400E-01
0.4164505E-01	0.3858936E-01	0.3553090E-01	0.3250159E-01	0.2953058E-01	0.2654362E-01
0.2386268E-01	0.2120576E-01	0.1868684E-01	0.1631603E-01	0.1409983E-01	0.1204146E-01
0.1014129E-01					
0.6729543E-01	0.6646803E-01	0.6534222E-01	0.6391939E-01	0.6220646E-01	0.6021604E-01
0.5796642E-01	0.5548123E-01	0.5278891E-01	0.4992195E-01	0.4691591E-01	0.4380827E-01
0.4063727E-01	0.3744072E-01	0.3425485E-01	0.3111333E-01	0.2804649E-01	0.2508072E-01
0.2223807E-01	0.1953616E-01	0.1698822E-01	0.1460326E-01	0.1238646E-01	0.1033958E-01
0.8461459E-02					
0.6749372E-01	0.6656845E-01	0.6533013E-01	0.6378112E-01	0.6192985E-01	0.5979099E-01
0.5738534E-01	0.5473947E-01	0.5188507E-01	0.4885800E-01	0.4569716E-01	0.4244325E-01
0.3913740E-01	0.3581985E-01	0.3252875E-01	0.2929909E-01	0.2616192E-01	0.2314378E-01
0.2026634E-01	0.1754642E-01	0.1499605E-01	0.1262281E-01	0.1043028E-01	0.8418546E-02
0.6584721E-02					
0.6712346E-01	0.6608771E-01	0.6472652E-01	0.6304359E-01	0.6104919E-01	0.5876032E-01
0.5620057E-01	0.5339962E-01	0.5039247E-01	0.4721834E-01	0.4391938E-01	0.4053926E-01
0.3712165E-01	0.3370880E-01	0.3034026E-01	0.2705181E-01	0.2387465E-01	0.2083492E-01
0.1795340E-01	0.1524561E-01	0.1272201E-01	0.1038843E-01	0.8246594E-02	0.6294709E-02
0.4528100E-02					
0.6613039E-01	0.6497104E-01	0.6347871E-01	0.6165606E-01	0.5951645E-01	0.5707950E-01
0.5437176E-01	0.5142613E-01	0.4828090E-01	0.4497850E-01	0.4156405E-01	0.3808377E-01
0.3458336E-01	0.3110652E-01	0.2769355E-01	0.2438036E-01	0.2119767E-01	0.1817060E-01
0.1531852E-01	0.1265519E-01	0.1018914E-01	0.7924166E-02	0.5859946E-02	0.3992726E-02
0.2315980E-02					
0.6447523E-01	0.6318330E-01	0.6155097E-01	0.5958568E-01	0.5730240E-01	0.5472359E-01

Figure 23. Group B Sample Problems Program Results (Sheet 15 of 27)

0.5187389E-01	0.4880439E-01	0.4554149E-01	0.4213552E-01	0.3863410E-01	0.3508545E-01
0.3153663E-01	0.2803201E-01	0.2461194E-01	0.2131169E-01	0.1816084E-01	0.1518288E-01
0.1239525E-01	0.9809549E-02	0.7432079E-02	0.5264395E-02	0.3304043E-02	0.1545267E-02
0.9999797E-00					
0.6213902E-01	0.6061378E-01	0.5919143E-01	0.5727935E-01	0.5509080E-01	0.5264495E-01
0.4996655E-01	0.4708542E-01	0.4403568E-01	0.4085468E-01	0.3758187E-01	0.3425748E-01
0.3092128E-01	0.2761133E-01	0.2436295E-01	0.2120781E-01	0.1817329E-01	0.1528211E-01
0.1255219E-01	0.9996600E-02	0.7623978E-02	0.5438760E-02	0.3441711E-02	0.1630451E-02
0.0000000E-38					
0.5912768E-01	0.5778177E-01	0.5618243E-01	0.5433683E-01	0.5225657E-01	0.4995770E-01
0.4746052E-01	0.4478914E-01	0.4197099E-01	0.3903607E-01	0.3601614E-01	0.3294381E-01
0.2985165E-01	0.2677127E-01	0.2373253E-01	0.2076280E-01	0.1788648E-01	0.1512452E-01
0.1249424E-01	0.1000929E-01	0.7679664E-02	0.5511905E-02	0.3509407E-02	0.1672733E-02
0.1778695E-08					
0.5547545E-01	0.5412675E-01	0.5256769E-01	0.5080495E-01	0.4884847E-01	0.4671142E-01
0.4441001E-01	0.4196323E-01	0.3939249E-01	0.3672117E-01	0.3397402E-01	0.3117661E-01
0.2835467E-01	0.2553351E-01	0.2273742E-01	0.1998912E-01	0.1730937E-01	0.1471662E-01
0.1222674E-01	0.9852913E-02	0.7605593E-02	0.5492566E-02	0.3519062E-02	0.1687959E-02
0.2371593E-08					
0.5124606E-01	0.4991635E-01	0.4841725E-01	0.4675478E-01	0.4493721E-01	0.4297503E-01
0.4088082E-01	0.3866910E-01	0.3635607E-01	0.3395931E-01	0.3149748E-01	0.2898988E-01
0.2645609E-01	0.2391556E-01	0.2138722E-01	0.1888913E-01	0.1643816E-01	0.1404970E-01
0.1173750E-01	0.9513463E-02	0.7387612E-02	0.5368041E-02	0.3460948E-02	0.1670712E-02
0.1334021E-08					
0.4653129E-01	0.4524512E-01	0.4382718E-01	0.4228261E-01	0.4061805E-01	0.3884160E-01
0.3696269E-01	0.3499203E-01	0.3294146E-01	0.3082374E-01	0.2865235E-01	0.2644131E-01
0.2420483E-01	0.2195739E-01	0.1971293E-01	0.1748516E-01	0.1528709E-01	0.1313091E-01
0.1102778E-01	0.8987789E-02	0.7019776E-02	0.5131332E-02	0.3328752E-02	0.1617054E-02
0.5928984E-09					
0.4144655E-01	0.4022969E-01	0.3891426E-01	0.3750442E-01	0.3600527E-01	0.3442280E-01
0.3276381E-01	0.3103591E-01	0.2924736E-01	0.2740705E-01	0.2552432E-01	0.2360890E-01
0.2167070E-01	0.1971975E-01	0.1776604E-01	0.1581935E-01	0.1388919E-01	0.1198461E-01
0.1011415E-01	0.8285736E-02	0.6506575E-02	0.4783150E-02	0.3121136E-02	0.1525402E-02
0.1630470E-08					
0.3612378E-01	0.3500137E-01	0.3380847E-01	0.3254826E-01	0.3122443E-01	0.2984121E-01
0.2840327E-01	0.2691574E-01	0.2538414E-01	0.2381436E-01	0.2221254E-01	0.2058509E-01
0.1893856E-01	0.1727958E-01	0.1561483E-01	0.1395093E-01	0.1229437E-01	0.1065146E-01
0.9028287E-02	0.7430609E-02	0.5863851E-02	0.4333039E-02	0.2842774E-02	0.1397203E-02
0.1334021E-08					
0.3070248E-01	0.2969712E-01	0.2864397E-01	0.2754526E-01	0.2640353E-01	0.2522154E-01
0.2400233E-01	0.2274917E-01	0.2146554E-01	0.2015509E-01	0.1882164E-01	0.1746917E-01
0.1610173E-01	0.1472343E-01	0.1333846E-01	0.1195098E-01	0.1056512E-01	0.9184973E-02
0.7814522E-02	0.6457630E-02	0.5118011E-02	0.3799205E-02	0.2504556E-02	0.1237190E-02

Figure 23. Group B Sample Problems Program Results (Sheet 16 of 27)

0.0000000E-38					
0.2532002E-01	0.2445016E-01	0.2354993E-01	0.2262075E-01	0.2166422E-01	0.2068203E-01
0.1967600E-01	0.1864806E-01	0.1760025E-01	0.1653467E-01	0.1545354E-01	0.1435912E-01
0.1325374E-01	0.1213978E-01	0.1101962E-01	0.9895683E-02	0.8770398E-02	0.7646165E-02
0.6525368E-02	0.5410355E-02	0.4303423E-02	0.3206806E-02	0.2122660E-02	0.1053065E-02
0.0000000E-38					
0.2010260E-01	0.1938138E-01	0.1864236E-01	0.1788637E-01	0.1711431E-01	0.1632711E-01
0.1552576E-01	0.1471129E-01	0.1388477E-01	0.1304732E-01	0.1220009E-01	0.1134424E-01
0.1048100E-01	0.9611584E-02	0.8737241E-02	0.7859229E-02	0.6978813E-02	0.6097266E-02
0.5215855E-02	0.4335845E-02	0.3458488E-02	0.2585023E-02	0.1716660E-02	0.8545970E-03
0.7411230E-09					
0.1515801E-01	0.1459266E-01	0.1401797E-01	0.1343436E-01	0.1284227E-01	0.1224214E-01
0.1163443E-01	0.1101962E-01	0.1039821E-01	0.9770706E-02	0.9137626E-02	0.8499499E-02
0.7856869E-02	0.7210286E-02	0.6560311E-02	0.5907509E-02	0.5252450E-02	0.4595709E-02
0.3937866E-02	0.3279498E-02	0.2621183E-02	0.1963502E-02	0.1307033E-02	0.6523416E-03
-0.0000000E-38					
0.1057083E-01	0.1016273E-01	0.9750496E-02	0.9334283E-02	0.8914255E-02	0.8490587E-02
0.8063449E-02	0.7633023E-02	0.7199489E-02	0.6763030E-02	0.6323839E-02	0.5882106E-02
0.5438026E-02	0.4991799E-02	0.4543619E-02	0.4093695E-02	0.3642229E-02	0.3189425E-02
0.2735494E-02	0.2280646E-02	0.1825086E-02	0.1369033E-02	0.9126905E-03	0.4562755E-03
0.0000000E-38					
0.6400480E-02	0.6145755E-02	0.5889664E-02	0.5632251E-02	0.5373555E-02	0.5113620E-02
0.4852490E-02	0.4590207E-02	0.4326816E-02	0.4062363E-02	0.3796894E-02	0.3530452E-02
0.3263084E-02	0.2994838E-02	0.2725765E-02	0.2455905E-02	0.2185312E-02	0.1914032E-02
0.1642117E-02	0.1369607E-02	0.1096564E-02	0.8230300E-03	0.5490567E-03	0.2746965E-03
0.0000000E-38					

Figure 23. Group B Sample Problems Program Results (Sheet 17 of 27)

```
                    NAA CONFAC II REPORT SAMPLE PROBLEMS GROUP B   K.A.TOUPS,7/31/65

RUN NO.   4   DATA USED FOR THIS RUN- *3DISK *3DISK *
                                      *      *9TDISK*
                                      *      *      *

THE FORM FACTOR FROM SURFACE *3DISK       * TO SURFACE *3DISK 9TDISK* = 0.01981

THE EXCHANGE COEFFICIENT (FA)=   0.50423E 00 SQ UNITS

                  THE MAPPING AREA = 0.2487101E 02 SQ UNITS

ONLY A PART OF SURFACE *3DISK       * SEES SURFACE *3DISK 9TDISK*
THE AREA OF THAT PART IS  0.2487759E 02 SQ UNITS.
THE AREA OF THE TOTAL SURFACE IS  0.2545584E 02 SQ UNITS.

THE AREA OF SURFACE *3DISK 9TDISK* = 0.2545584E 02 SQ UNITS.

THE FORM FACTOR FROM SURFACE *3DISK 9TDISK* TO SURFACE *3DISK       * = 0.01981

THE FOLLOWING ARE THE (FINAL) SURFACE COORDINATES USED FOR THE FACTOR COMPUTATION-


***** DATA NAME- *3DISK       *

POINT       X              Y              Z            POINT       X              Y              Z
       0.0000000E-38  0.0000000E-38  0.1000000E 01---(INTERNALLY GENERATED ORIENTATION VECTOR)
   1  -0.0000000E-38 -0.0000000E-38 -0.0000000E-38       2   0.2296101E 01  0.0000000E-38  0.0000000E-38
   3   0.3919689E 01  0.1623588E 01  0.0000000E-38       4   0.3919689E 01  0.2640797E 01  0.0000000E-38
   5   0.3015376E 01  0.4824002E 01  0.0000000E-38       6   0.2296101E 01  0.5543278E 01  0.0000000E-38
   7   0.0000000E-38  0.5543278E 01  0.0000000E-38       8  -0.1623588E 01  0.3919689E 01  0.0000000E-38
   9  -0.1623588E 01  0.1623588E 01  0.0000000E-38


***** DATA NAME- *3DISK 9TDISK*

POINT       X              Y              Z            POINT       X              Y              Z
```

Figure 23. Group B Sample Problems Program Results (Sheet 18 of 27)

```
        0.6801506E 01  0.1866200E 01  0.6098075E 01---(INTERNALLY GENERATED ORIENTATION VECTOR)
   1    0.7601609E 01  0.2197613E 01  0.5598074E 01       2   0.8245275E 01  0.3415304E 01  0.7435191E 01
   3    0.7839379E 01  0.5543276E 01  0.8196149E 01       4   0.6621687E 01  0.7334993E 01  0.7435190E 01
   5    0.5305509E 01  0.7740889E 01  0.5598074E 01       6   0.4661843E 01  0.6523198E 01  0.3760957E 01
   7    0.5067740E 01  0.4395226E 01  0.2999999E 01       8   0.6285431E 01  0.2603510E 01  0.3760958E 01

COORDINATES OF POINTS ON BOUNDARY OF SURF     #3DISK        * FOR EACH Y INTERVAL

      X-LEFT          X-RIGHT          Y                      X-LEFT          X-RIGHT          Y

 -0.0000000E-38  0.2296101E 01  0.0000000E-38          -0.2309699E 00  0.2527071E 01  0.2309699E 00
 -0.4619398E 00  0.2758041E 01  0.4619398E 00          -0.6929097E 00  0.2989010E 01  0.6929097E 00
 -0.9238796E 00  0.3219980E 01  0.9238796E 00          -0.1154849E 01  0.3450950E 01  0.1154849E 01
 -0.1385819E 01  0.3681920E 01  0.1385819E 01          -0.1616789E 01  0.3912890E 01  0.1616789E 01
 -0.1623588E 01  0.3919689E 01  0.1847759E 01          -0.1623588E 01  0.3919689E 01  0.2078729E 01
 -0.1623588E 01  0.3919689E 01  0.2309699E 01          -0.1623588E 01  0.3919689E 01  0.2540669E 01
 -0.1623588E 01  0.3865493E 01  0.2771639E 01          -0.1623588E 01  0.3769822E 01  0.3002609E 01
 -0.1623588E 01  0.3674151E 01  0.3233578E 01          -0.1623588E 01  0.3578480E 01  0.3464548E 01
 -0.1623588E 01  0.3482809E 01  0.3695518E 01          -0.1616790E 01  0.3387139E 01  0.3926488E 01
 -0.1385820E 01  0.3291468E 01  0.4157458E 01          -0.1154850E 01  0.3195797E 01  0.4388428E 01
 -0.9238800E 00  0.3100126E 01  0.4619398E 01          -0.6929101E 00  0.2989011E 01  0.4850367E 01
 -0.4619403E 00  0.2758041E 01  0.5081337E 01          -0.2309704E 00  0.2527071E 01  0.5312307E 01
  0.0000000E-38  0.2296101E 01  0.5543278E 01

NO. OF HORIZONTAL INCREMENTS= 24  NO. OF VERTICAL INCREMENTS= 24

THE FOLLOWING ARE PLANE POINT CONFIGURATION FACTORS COMPUTED FOR THIS RUN
LOWEST GRID LINE FIRST, FROM X-LEFT TO X-RIGHT.

 0.1922563E-01  0.1937665E-01  0.1952127E-01  0.1965898E-01  0.1978917E-01  0.1991121E-01
 0.2002446E-01  0.2012821E-01  0.2022176E-01  0.2030435E-01  0.2037520E-01  0.2043350E-01
 0.2047841E-01  0.2050905E-01  0.2052453E-01  0.2052391E-01  0.2050623E-01  0.2047050E-01
 0.2041572E-01  0.2034084E-01  0.2024481E-01  0.2012656E-01  0.1998499E-01  0.1981901E-01
 0.1962750E-01
 0.1937100E-01  0.1958005E-01  0.1978143E-01  0.1997421E-01  0.2015736E-01  0.2032980E-01
 0.2049038E-01  0.2063787E-01  0.2077099E-01  0.2088837E-01  0.2098857E-01  0.2107010E-01
 0.2113134E-01  0.2117065E-01  0.2118629E-01  0.2117645E-01  0.2113924E-01  0.2107274E-01
 0.2097493E-01  0.2084376E-01  0.2067711E-01  0.2047285E-01  0.2022879E-01  0.1994274E-01
 0.1961251E-01
 0.1942545E-01  0.1969860E-01  0.1996336E-01  0.2021833E-01  0.2046193E-01  0.2069245E-01
```

Figure 23. Group B Sample Problems Program Results (Sheet 19 of 27)

0.2090809E-01	0.2110686E-01	0.2128667E-01	0.2144525E-01	0.2158017E-01	0.2168387E-01
0.2176860E-01	0.2181647E-01	0.2182940E-01	0.2180418E-01	0.2173744E-01	0.2162567E-01
0.2146521E-01	0.2125231E-01	0.2098310E-01	0.2065367E-01	0.2026003E-01	0.1979822E-01
0.1926429E-01					
0.1939185E-01	0.1973329E-01	0.2006647E-01	0.2038936E-01	0.2069973E-01	0.2099514E-01
0.2127290E-01	0.2153005E-01	0.2176338E-01	0.2196937E-01	0.2214424E-01	0.2228387E-01
0.2238383E-01	0.2243938E-01	0.2244545E-01	0.2239665E-01	0.2228731E-01	0.2211143E-01
0.2186278E-01	0.2153492E-01	0.2112123E-01	0.2061496E-01	0.2000936E-01	0.1929775E-01
0.1847364E-01					
0.1927450E-01	0.1968658E-01	0.2009146E-01	0.2048646E-01	0.2086863E-01	0.2123462E-01
0.2158067E-01	0.2190260E-01	0.2219579E-01	0.2245507E-01	0.2267478E-01	0.2284871E-01
0.2297007E-01	0.2303144E-01	0.2302486E-01	0.2294176E-01	0.2277296E-01	0.2250879E-01
0.2213908E-01	0.2165330E-01	0.2104061E-01	0.2029010E-01	0.1939094E-01	0.1833257E-01
0.1710509E-01					
0.1907892E-01	0.1956217E-01	0.2004028E-01	0.2051000E-01	0.2096750E-01	0.2140845E-01
0.2182789E-01	0.2222013E-01	0.2257880E-01	0.2289666E-01	0.2316563E-01	0.2337668E-01
0.2351978E-01	0.2358389E-01	0.2355690E-01	0.2342566E-01	0.2317600E-01	0.2279279E-01
0.2226009E-01	0.2156135E-01	0.2067963E-01	0.1959797E-01	0.1829988E-01	0.1676982E-01
0.1499383E-01					
0.1881166E-01	0.1936485E-01	0.1991606E-01	0.2046140E-01	0.2099622E-01	0.2151513E-01
0.2201177E-01	0.2247878E-01	0.2290766E-01	0.2328864E-01	0.2361056E-01	0.2386077E-01
0.2402497E-01	0.2408718E-01	0.2402961E-01	0.2383274E-01	0.2347527E-01	0.2293434E-01
0.2218573E-01	0.2120428E-01	0.1996443E-01	0.1844100E-01	0.1661016E-01	0.1445058E-01
0.1194489E-01					
0.1847994E-01	0.1910030E-01	0.1972286E-01	0.2034314E-01	0.2095571E-01	0.2155405E-01
0.2213035E-01	0.2267534E-01	0.2317807E-01	0.2362574E-01	0.2400341E-01	0.2429384E-01
0.2447722E-01	0.2453103E-01	0.2442989E-01	0.2414550E-01	0.2364676E-01	0.2289995E-01
0.2186928E-01	0.2051766E-01	0.1880784E-01	0.1670393E-01	0.1417351E-01	0.1119001E-01
0.7735586E-02					
0.1870472E-01	0.1934308E-01	0.1998426E-01	0.2062362E-01	0.2125547E-01	0.2187293E-01
0.2246778E-01	0.2303013E-01	0.2354834E-01	0.2400863E-01	0.2439492E-01	0.2468851E-01
0.2486783E-01	0.2490823E-01	0.2478178E-01	0.2445718E-01	0.2389985E-01	0.2307214E-01
0.2193387E-01	0.2044323E-01	0.1855805E-01	0.1623767E-01	0.1344528E-01	0.1015087E-01
0.6334609E-02					
0.1891679E-01	0.1956963E-01	0.2022567E-01	0.2088006E-01	0.2152685E-01	0.2215888E-01
0.2276744E-01	0.2334211E-01	0.2387053E-01	0.2433800E-01	0.2472734E-01	0.2501844E-01
0.2518801E-01	0.2520932E-01	0.2505196E-01	0.2468168E-01	0.2406047E-01	0.2314676E-01
0.2189600E-01	0.2026161E-01	0.1819648E-01	0.1565503E-01	0.1259598E-01	0.8985777E-02
0.4802534E-02					
0.1909528E-01	0.1976021E-01	0.2042851E-01	0.2109514E-01	0.2175393E-01	0.2239729E-01
0.2301610E-01	0.2359935E-01	0.2413390E-01	0.2460416E-01	0.2499172E-01	0.2527501E-01
0.2542899E-01	0.2542472E-01	0.2522918E-01	0.2480503E-01	0.2411064E-01	0.2310029E-01
0.2172480E-01	0.1993257E-01	0.1767124E-01	0.1489011E-01	0.1154322E-01	0.7593422E-02

Figure 23. Group B Sample Problems Program Results (Sheet 20 of 27)

0.3016986E-02					
0.1923765E-01	0.1991199E-01	0.2058966E-01	0.2126542E-01	0.2193280E-01	0.2258386E-01
0.2320900E-01	0.2379656E-01	0.2433265E-01	0.2480067E-01	0.2518098E-01	0.2545052E-01
0.2558235E-01	0.2554528E-01	0.2530355E-01	0.2481661E-01	0.2403904E-01	0.2292079E-01
0.2140786E-01	0.1944339E-01	0.1696961E-01	0.1393046E-01	0.1027529E-01	0.5963440E-02
0.9696493E-03					
0.1934158E-01	0.2001567E-01	0.2069284E-01	0.2136776E-01	0.2203387E-01	0.2268316E-01
0.2330586E-01	0.2389020E-01	0.2442200E-01	0.2488440E-01	0.2525739E-01	0.2551738E-01
0.2563678E-01	0.2558358E-01	0.2532094E-01	0.2480692E-01	0.2399439E-01	0.2283116E-01
0.2126059E-01	0.1922269E-01	0.1665594E-01	0.1350009E-01	0.9699854E-02	0.5209775E-02
0.9819879E-03					
0.1940497E-01	0.2007044E-01	0.2073844E-01	0.2140374E-01	0.2205988E-01	0.2269896E-01
0.2331137E-01	0.2388553E-01	0.2440754E-01	0.2486080E-01	0.2522565E-01	0.2547889E-01
0.2559336E-01	0.2553748E-01	0.2527492E-01	0.2476382E-01	0.2395755E-01	0.2280381E-01
0.2124557E-01	0.1922169E-01	0.1666956E-01	0.1352561E-01	0.9730861E-02	0.5234544E-02
0.1448895E-07					
0.1942599E-01	0.2007946E-01	0.2073471E-01	0.2138657E-01	0.2202868E-01	0.2265324E-01
0.2325084E-01	0.2381010E-01	0.2431740E-01	0.2475649E-01	0.2510810E-01	0.2534953E-01
0.2545416E-01	0.2539101E-01	0.2512434E-01	0.2461320E-01	0.2381130E-01	0.2266690E-01
0.2112315E-01	0.1911888E-01	0.1659001E-01	0.1347179E-01	0.9702091E-02	0.5225726E-02
0.1056100E-07					
0.1940314E-01	0.2004126E-01	0.2068019E-01	0.2131482E-01	0.2193888E-01	0.2254470E-01
0.2312304E-01	0.2366277E-01	0.2415057E-01	0.2457057E-01	0.2490397E-01	0.2512865E-01
0.2521866E-01	0.2514381E-01	0.2486920E-01	0.2435486E-01	0.2355545E-01	0.2242017E-01
0.2089296E-01	0.1891312E-01	0.1641655E-01	0.1333769E-01	0.9612514E-02	0.5182527E-02
0.1302524E-07					
0.1933528E-01	0.1995476E-01	0.2057389E-01	0.2118761E-01	0.2178972E-01	0.2237272E-01
0.2292753E-01	0.2344330E-01	0.2390702E-01	0.2430326E-01	0.2461377E-01	0.2481705E-01
0.2488795E-01	0.2479723E-01	0.2451106E-01	0.2399067E-01	0.2319205E-01	0.2206579E-01
0.2055714E-01	0.1860661E-01	0.1615087E-01	0.1312456E-01	0.9462885E-02	0.5105235E-02
0.1419250E-07					
0.1924112E-01	0.1983800E-01	0.2043305E-01	0.2102126E-01	0.2159652E-01	0.2215144E-01
0.2267716E-01	0.2316308E-01	0.2359656E-01	0.2396266E-01	0.2424370E-01	0.2441896E-01
0.2446423E-01	0.2435134E-01	0.2404784E-01	0.2351648E-01	0.2271500E-01	0.2159587E-01
0.2010641E-01	0.1818911E-01	0.1578246E-01	0.1282251E-01	0.9245023E-02	0.4988812E-02
0.1252493E-07					
0.1972696E-01	0.2026838E-01	0.2080187E-01	0.2132221E-01	0.2182309E-01	0.2229711E-01
0.2273546E-01	0.2312780E-01	0.2346197E-01	0.2372378E-01	0.2389673E-01	0.2396165E-01
0.2389646E-01	0.2367578E-01	0.2327069E-01	0.2264839E-01	0.2177204E-01	0.2060061E-01
0.1908900E-01	0.1718835E-01	0.1484668E-01	0.1201000E-01	0.8624003E-02	0.4636408E-02
0.1593414E-07					
0.2012117E-01	0.2059706E-01	0.2105902E-01	0.2150168E-01	0.2191875E-01	0.2230291E-01
0.2264562E-01	0.2293697E-01	0.2316552E-01	0.2331810E-01	0.2337953E-01	0.2333251E-01

Figure 23. Group B Sample Problems Program Results (Sheet 21 of 27)

0.2315729E-01	0.2283151E-01	0.2232992E-01	0.2162429E-01	0.2068319E-01	0.1947203E-01
0.1795310E-01	0.1608588E-01	0.1382747E-01	0.1113352E-01	0.7959309E-02	0.4261450E-02
0.8448802E-08					
0.2039665E-01	0.2079713E-01	0.2117797E-01	0.2153386E-01	0.2185866E-01	0.2214530E-01
0.2238571E-01	0.2257066E-01	0.2268960E-01	0.2273058E-01	0.2268002E-01	0.2252265E-01
0.2224126E-01	0.2181657E-01	0.2122715E-01	0.2044926E-01	0.1945682E-01	0.1822138E-01
0.1671224E-01	0.1489668E-01	0.1274029E-01	0.1020760E-01	0.7262884E-02	0.3871222E-02
0.1282143E-07					
0.2052222E-01	0.2083681E-01	0.2112694E-01	0.2138755E-01	0.2161290E-01	0.2179649E-01
0.2193098E-01	0.2200813E-01	0.2201866E-01	0.2195221E-01	0.2179715E-01	0.2154058E-01
0.2116819E-01	0.2066413E-01	0.2001101E-01	0.1918981E-01	0.1817983E-01	0.1695878E-01
0.1550279E-01	0.1378666E-01	0.1178400E-01	0.9467716E-02	0.6810471E-02	0.3785377E-02
0.3668777E-03					
0.2046248E-01	0.2067663E-01	0.2086470E-01	0.2102256E-01	0.2114563E-01	0.2122880E-01
0.2126642E-01	0.2125227E-01	0.2117944E-01	0.2104036E-01	0.2082668E-01	0.2052929E-01
0.2013821E-01	0.1964259E-01	0.1903066E-01	0.1828971E-01	0.1740606E-01	0.1636515E-01
0.1515145E-01	0.1374864E-01	0.1213968E-01	0.1030696E-01	0.8232512E-02	0.5898312E-02
0.3286606E-02					
0.2017830E-01	0.2029374E-01	0.2038356E-01	0.2044466E-01	0.2047362E-01	0.2046672E-01
0.2041993E-01	0.2032885E-01	0.2018873E-01	0.1999440E-01	0.1974029E-01	0.1942041E-01
0.1902827E-01	0.1855695E-01	0.1799902E-01	0.1734657E-01	0.1659119E-01	0.1572398E-01
0.1473558E-01	0.1361615E-01	0.1235546E-01	0.1094298E-01	0.9367820E-02	0.7618993E-02
0.5685438E-02					
0.1962749E-01	0.1965211E-01	0.1965371E-01	0.1963016E-01	0.1957917E-01	0.1949828E-01
0.1938487E-01	0.1923614E-01	0.1904910E-01	0.1882056E-01	0.1854715E-01	0.1822526E-01
0.1785107E-01	0.1742057E-01	0.1692947E-01	0.1637330E-01	0.1574734E-01	0.1504665E-01
0.1426607E-01	0.1340024E-01	0.1244357E-01	0.1139034E-01	0.1023465E-01	0.8970452E-02
0.7591655E-02					

Figure 23. Group B Sample Problems Program Results (Sheet 22 of 27)

```
                    NAA CONFAC II REPORT SAMPLE PROBLEMS GROUP B   K.A.TOUPS,7/31/65

RUN NO.    5   DATA USED FOR THIS RUN- *3DISK *1PLAT1*
                                       *9TDISK*      *
                                       *      *      *

THE FORM FACTOR FROM SURFACE *3DISK 9TDISK* TO SURFACE *1PLAT1      * = 0.04739

THE EXCHANGE COEFFICIENT (FA)=   0.12064E 01 SQ UNITS

                  THE MAPPING AREA = 0.2545278E 02 SQ UNITS

THE AREA OF SURFACE *3DISK 9TDISK* = 0.2545584E 02 SQ UNITS.


ONLY A PART OF SURFACE *1PLAT1      * SEES SURFACE *3DISK 9TDISK*
THE AREA OF THAT PART IS  0.3686761E 02 SQ UNITS.
THE AREA OF THE TOTAL SURFACE IS  0.4837355E 02 SQ UNITS.

THE FORM FACTOR FROM SURFACE *1PLAT1      * TO SURFACE *3DISK 9TDISK* = 0.02494


THE FOLLOWING ARE THE (FINAL) SURFACE COORDINATES USED FOR THE FACTOR COMPUTATION-


***** DATA NAME- *3DISK 9TDISK*

POINT        X              Y              Z            POINT        X              Y              Z
       0.0000000E-38 -0.0000000E-38  0.1000000E 01---(INTERNALLY GENERATED ORIENTATION VECTOR)
   1   0.0000000E-38 -0.0000000E-38 -0.0000000E-38       2   0.2296100E 01 -0.0000000E-38  0.0000000E-38
   3   0.3919688E 01  0.1623588E 01  0.0000000E-38       4   0.3919688E 01  0.3919688E 01  0.0000000E-38
   5   0.2296100E 01  0.5543276E 01  0.0000000E-38       6   0.0000000E-38  0.5543276E 01 -0.0000000E-38
   7  -0.1623587E 01  0.3919688E 01  0.0000000E-38       8  -0.1623588E 01  0.1623588E 01  0.0000000E-38


***** DATA NAME- *1PLAT1      *

POINT        X              Y              Z            POINT        X              Y              Z
      -0.3085679E 01 -0.9331039E 00  0.6115362E 01---(INTERNALLY GENERATED ORIENTATION VECTOR)
```

Figure 23. Group B Sample Problems Program Results (Sheet 23 of 27)

```
  1  -0.4001189E 01 -0.1218411E 01  0.6398980E 01        2  -0.3664933E 01 -0.5949895E 01  0.2724745E 01
  3  -0.5135856E 01 -0.3938529E 01  0.0000000E-38        4  -0.7171819E 01  0.2594586E 01  0.0000000E-38
  5  -0.7212955E 01  0.3173414E 01  0.4494888E 00

COORDINATES OF POINTS ON BOUNDARY OF SURF    *3DISK 9TDISK* FOR EACH Y INTERVAL

     X-LEFT          X-RIGHT          Y                        X-LEFT          X-RIGHT          Y

 0.0000000E-38  0.2296100E 01 -0.0000000E-38            -0.2309698E 00  0.2527070E 01  0.2309698E 00
-0.4619395E 00  0.2758039E 01  0.4619397E 00            -0.6929093E 00  0.2989009E 01  0.6929095E 00
-0.9238790E 00  0.3219979E 01  0.9238794E 00            -0.1154849E 01  0.3450949E 01  0.1154849E 01
-0.1385819E 01  0.3681919E 01  0.1385819E 01            -0.1616788E 01  0.3912888E 01  0.1616789E 01
-0.1623588E 01  0.3919688E 01  0.1847759E 01            -0.1623587E 01  0.3919688E 01  0.2078728E 01
-0.1623587E 01  0.3919688E 01  0.2309698E 01            -0.1623587E 01  0.3919688E 01  0.2540668E 01
-0.1623587E 01  0.3919688E 01  0.2771638E 01            -0.1623587E 01  0.3919688E 01  0.3002608E 01
-0.1623587E 01  0.3919688E 01  0.3233578E 01            -0.1623587E 01  0.3919688E 01  0.3464547E 01
-0.1623587E 01  0.3919688E 01  0.3695517E 01            -0.1616789E 01  0.3912889E 01  0.3926487E 01
-0.1385819E 01  0.3681919E 01  0.4157457E 01            -0.1154849E 01  0.3450950E 01  0.4388427E 01
-0.9238795E 00  0.3219980E 01  0.4619396E 01            -0.6929098E 00  0.2989010E 01  0.4850366E 01
-0.4619401E 00  0.2758040E 01  0.5081336E 01            -0.2309704E 00  0.2527071E 01  0.5312306E 01
 0.0000000E-38  0.2296100E 01  0.5543276E 01

NO. OF HORIZONTAL INCREMENTS= 24  NO. OF VERTICAL INCREMENTS= 24

THE FOLLOWING ARE PLANE POINT CONFIGURATION FACTORS COMPUTED FOR THIS RUN
LOWEST GRID LINE FIRST, FROM X-LEFT TO X-RIGHT.

 0.9553848E-01  0.9263247E-01  0.8982160E-01  0.8710299E-01  0.8447382E-01  0.8193132E-01
 0.7947276E-01  0.7709550E-01  0.7479694E-01  0.7257454E-01  0.7042584E-01  0.6834841E-01
 0.6633991E-01  0.6439806E-01  0.6252061E-01  0.6070541E-01  0.5895035E-01  0.5725340E-01
 0.5561256E-01  0.5402592E-01  0.5249161E-01  0.5100783E-01  0.4957283E-01  0.4818491E-01
 0.4684244E-01
 0.9995366E-01  0.9635510E-01  0.9289416E-01  0.8956606E-01  0.8636610E-01  0.8328972E-01
 0.8033242E-01  0.7748983E-01  0.7475772E-01  0.7213193E-01  0.6960844E-01  0.6718334E-01
 0.6485282E-01  0.6261322E-01  0.6046098E-01  0.5839264E-01  0.5640488E-01  0.5449449E-01
 0.5265834E-01  0.5089347E-01  0.4919697E-01  0.4756608E-01  0.4599811E-01  0.4449049E-01
 0.4304076E-01
 0.1040466E 00  0.9974769E-01  0.9563510E-01  0.9170157E-01  0.8794001E-01  0.8434353E-01
 0.8090540E-01  0.7761909E-01  0.7447824E-01  0.7147669E-01  0.6860849E-01  0.6586784E-01
 0.6324917E-01  0.6074709E-01  0.5835642E-01  0.5607214E-01  0.5386944E-01  0.5180370E-01
```

Figure 23. Group B Sample Problems Program Results (Sheet 24 of 27)

0.4981049E-01	0.4790554E-01	0.4608478E-01	0.4434429E-01	0.4268034E-01	0.4108935E-01
0.3956790E-01					
0.1077341E 00	0.1027431E 00	0.9799166E-01	0.9346962E-01	0.8916701E-01	0.8507414E-01
0.8118163E-01	0.7748036E-01	0.7396153E-01	0.7061660E-01	0.6743733E-01	0.6441578E-01
0.6154429E-01	0.5881552E-01	0.5622239E-01	0.5375814E-01	0.5141625E-01	0.4919055E-01
0.4707508E-01	0.4506419E-01	0.4315248E-01	0.4133481E-01	0.3960629E-01	0.3796227E-01
0.3639831E-01					
0.1109341E 00	0.1052762E 00	0.9991401E-01	0.9483380E-01	0.9002229E-01	0.8546665E-01
0.8115451E-01	0.7707288E-01	0.7321322E-01	0.6956138E-01	0.6610764E-01	0.6284167E-01
0.5975356E-01	0.5683361E-01	0.5407333E-01	0.5146343E-01	0.4899580E-01	0.4666257E-01
0.4445622E-01	0.4236958E-01	0.4039591E-01	0.3852875E-01	0.3676205E-01	0.3509005E-01
0.3350729E-01					
0.1135665E 00	0.1072853E 00	0.1013564E 00	0.9576204E-01	0.9048540E-01	0.8551028E-01
0.8082114E-01	0.7640298E-01	0.7224141E-01	0.6832259E-01	0.6463320E-01	0.6116047E-01
0.5789216E-01	0.5481656E-01	0.5192250E-01	0.4919932E-01	0.4663689E-01	0.4422558E-01
0.4195628E-01	0.3982035E-01	0.3780962E-01	0.3591641E-01	0.3413345E-01	0.3245390E-01
0.3087134E-01					
0.1155558E 00	0.1087137E 00	0.1022782E 00	0.9622743E-01	0.9054078E-01	0.8519866E-01
0.8018239E-01	0.7547406E-01	0.7105653E-01	0.6691334E-01	0.6302867E-01	0.5938737E-01
0.5597495E-01	0.5277757E-01	0.4978200E-01	0.4697568E-01	0.4434669E-01	0.4188374E-01
0.3957613E-01	0.3741379E-01	0.3538723E-01	0.3348752E-01	0.3170628E-01	0.3003566E-01
0.2846831E-01					
0.1168323E 00	0.1095107E 00	0.1026450E 00	0.9620898E-01	0.9017824E-01	0.8453008E-01
0.7924302E-01	0.7429658E-01	0.6967122E-01	0.6534815E-01	0.6130936E-01	0.5753760E-01
0.5401631E-01	0.5072970E-01	0.4766271E-01	0.4480100E-01	0.4213098E-01	0.3963983E-01
0.3731538E-01	0.3514624E-01	0.3312166E-01	0.3123161E-01	0.2946666E-01	0.2781804E-01
0.2627754E-01					
0.1103959E 00	0.1036693E 00	0.9734592E-01	0.9140360E-01	0.8582190E-01	0.8058167E-01
0.7566482E-01	0.7105403E-01	0.6673269E-01	0.6268477E-01	0.5889484E-01	0.5534800E-01
0.5202991E-01	0.4892680E-01	0.4602547E-01	0.4331330E-01	0.4077826E-01	0.3840892E-01
0.3619444E-01	0.3412460E-01	0.3218971E-01	0.3038070E-01	0.2868900E-01	0.2710663E-01
0.2562607E-01					
0.1038443E 00	0.9772511E-01	0.9195485E-01	0.8651622E-01	0.8139283E-01	0.7656928E-01
0.7203091E-01	0.6776361E-01	0.6375371E-01	0.5998797E-01	0.5645350E-01	0.5313778E-01
0.5002868E-01	0.4711443E-01	0.4438370E-01	0.4182559E-01	0.3942964E-01	0.3718587E-01
0.3508474E-01	0.3311720E-01	0.3127468E-01	0.2954905E-01	0.2793268E-01	0.2641834E-01
0.2499927E-01					
0.9744464E-01	0.9190787E-01	0.8666916E-01	0.8171507E-01	0.7703314E-01	0.7261155E-01
0.6843891E-01	0.6450414E-01	0.6079635E-01	0.5730491E-01	0.5401932E-01	0.5092926E-01
0.4802465E-01	0.4529563E-01	0.4273263E-01	0.4032633E-01	0.3806777E-01	0.3594829E-01
0.3395962E-01	0.3209382E-01	0.3034335E-01	0.2870102E-01	0.2716003E-01	0.2571394E-01
0.2435567E-01					
0.9123257E-01	0.8625065E-01	0.8151851E-01	0.7702685E-01	0.7276694E-01	0.6873030E-01

Figure 23. Group B Sample Problems Program Results (Sheet 25 of 27)

0.6490861E-01	0.6129358E-01	0.5787694E-01	0.5465041E-01	0.5160572E-01	0.4873461E-01
0.4602889E-01	0.4348047E-01	0.4108135E-01	0.3882376E-01	0.3670008E-01	0.3470294E-01
0.3282518E-01	0.3105997E-01	0.2940071E-01	0.2784109E-01	0.2637513E-01	0.2499710E-01
0.2370160E-01					
0.8523999E-01	0.8078158E-01	0.7652824E-01	0.7247452E-01	0.6861508E-01	0.6494453E-01
0.6145733E-01	0.5814776E-01	0.5500991E-01	0.5203768E-01	0.4922479E-01	0.4656488E-01
0.4405148E-01	0.4167809E-01	0.3943824E-01	0.3732549E-01	0.3533352E-01	0.3345609E-01
0.3168716E-01	0.3002084E-01	0.2845146E-01	0.2697354E-01	0.2558184E-01	0.2427133E-01
0.2303723E-01					
0.7949235E-01	0.7552368E-01	0.7171931E-01	0.6807722E-01	0.6459512E-01	0.6127037E-01
0.5809993E-01	0.5508036E-01	0.5220787E-01	0.4947830E-01	0.4688720E-01	0.4442987E-01
0.4210141E-01	0.3989679E-01	0.3781087E-01	0.3583847E-01	0.3397441E-01	0.3221355E-01
0.3055082E-01	0.2898127E-01	0.2750002E-01	0.2610239E-01	0.2478382E-01	0.2353995E-01
0.2236657E-01					
0.7400923E-01	0.7049493E-01	0.6710831E-01	0.6385033E-01	0.6072135E-01	0.5772112E-01
0.5484878E-01	0.5210291E-01	0.4948155E-01	0.4698226E-01	0.4460220E-01	0.4233816E-01
0.4018664E-01	0.3814389E-01	0.3620600E-01	0.3436892E-01	0.3262851E-01	0.3098061E-01
0.2942104E-01	0.2794568E-01	0.2655045E-01	0.2523135E-01	0.2398448E-01	0.2280608E-01
0.2169248E-01					
0.6880453E-01	0.6570841E-01	0.6270761E-01	0.5980557E-01	0.5700489E-01	0.5430732E-01
0.5171387E-01	0.4922483E-01	0.4683982E-01	0.4455791E-01	0.4237764E-01	0.4029711E-01
0.3831403E-01	0.3642582E-01	0.3462962E-01	0.3292240E-01	0.3130096E-01	0.2976201E-01
0.2830221E-01	0.2691816E-01	0.2560649E-01	0.2436387E-01	0.2318698E-01	0.2207261E-01
0.2101762E-01					
0.6388676E-01	0.6117260E-01	0.5852561E-01	0.5595122E-01	0.5345384E-01	0.5103688E-01
0.4870289E-01	0.4645355E-01	0.4428985E-01	0.4221211E-01	0.4022006E-01	0.3831291E-01
0.3648945E-01	0.3474808E-01	0.3308690E-01	0.3150376E-01	0.2999630E-01	0.2856200E-01
0.2719825E-01	0.2590234E-01	0.2467153E-01	0.2350308E-01	0.2239421E-01	0.2134223E-01
0.2034446E-01					
0.5918939E-01	0.5682847E-01	0.5451064E-01	0.5224279E-01	0.5003061E-01	0.4787880E-01
0.4579105E-01	0.4377019E-01	0.4181826E-01	0.3993661E-01	0.3812594E-01	0.3638643E-01
0.3471775E-01	0.3311918E-01	0.3158962E-01	0.3012773E-01	0.2873188E-01	0.2740027E-01
0.2613093E-01	0.2492179E-01	0.2377069E-01	0.2267543E-01	0.2163378E-01	0.2064348E-01
0.1970231E-01					
0.5280633E-01	0.5094729E-01	0.4911374E-01	0.4731099E-01	0.4554352E-01	0.4381512E-01
0.4212890E-01	0.4048738E-01	0.3889252E-01	0.3734580E-01	0.3584825E-01	0.3440049E-01
0.3300283E-01	0.3165525E-01	0.3035745E-01	0.2910891E-01	0.2790892E-01	0.2675659E-01
0.2565089E-01	0.2459069E-01	0.2357476E-01	0.2260181E-01	0.2167048E-01	0.2077937E-01
0.1992709E-01					
0.4727154E-01	0.4581178E-01	0.4436684E-01	0.4294050E-01	0.4153606E-01	0.4015635E-01
0.3880377E-01	0.3748034E-01	0.3618771E-01	0.3492723E-01	0.3369993E-01	0.3250659E-01
0.3134774E-01	0.3022371E-01	0.2913461E-01	0.2808041E-01	0.2706091E-01	0.2607580E-01
0.2512463E-01	0.2420688E-01	0.2332193E-01	0.2246911E-01	0.2164767E-01	0.2085683E-01

Figure 23. Group B Sample Problems Program Results (Sheet 26 of 27)

0.2009577E-01					
0.4245409E-01	0.4131346E-01	0.4018125E-01	0.3906002E-01	0.3795204E-01	0.3685930E-01
0.3578351E-01	0.3472620E-01	0.3368863E-01	0.3267188E-01	0.3167685E-01	0.3070426E-01
0.2975459E-01	0.2882855E-01	0.2792615E-01	0.2704768E-01	0.2619320E-01	0.2536273E-01
0.2455615E-01	0.2377329E-01	0.2301392E-01	0.2227775E-01	0.2156446E-01	0.2087364E-01
0.2020488E-01					
0.3824554E-01	0.3736104E-01	0.3648120E-01	0.3560766E-01	0.3474187E-01	0.3388516E-01
0.3303871E-01	0.3220355E-01	0.3138058E-01	0.3057062E-01	0.2977435E-01	0.2899236E-01
0.2822514E-01	0.2747310E-01	0.2673657E-01	0.2601580E-01	0.2531099E-01	0.2462225E-01
0.2394967E-01	0.2329326E-01	0.2265299E-01	0.2202881E-01	0.2142060E-01	0.2082822E-01
0.2025152E-01					
0.3455580E-01	0.3387763E-01	0.3320195E-01	0.3252974E-01	0.3186191E-01	0.3119926E-01
0.3054254E-01	0.2989242E-01	0.2924950E-01	0.2861434E-01	0.2798740E-01	0.2736913E-01
0.2675990E-01	0.2616003E-01	0.2556982E-01	0.2498949E-01	0.2441925E-01	0.2385926E-01
0.2330965E-01	0.2277052E-01	0.2224193E-01	0.2172392E-01	0.2121652E-01	0.2071971E-01
0.2023346E-01					
0.3130981E-01	0.3079836E-01	0.3028820E-01	0.2977986E-01	0.2927385E-01	0.2877064E-01
0.2827067E-01	0.2777434E-01	0.2728202E-01	0.2679405E-01	0.2631074E-01	0.2583236E-01
0.2535919E-01	0.2489144E-01	0.2442933E-01	0.2397305E-01	0.2352274E-01	0.2307856E-01
0.2264064E-01	0.2220907E-01	0.2178395E-01	0.2136536E-01	0.2095335E-01	0.2054797E-01
0.2014925E-01					
0.2844474E-01	0.2806837E-01	0.2769262E-01	0.2731775E-01	0.2694404E-01	0.2657174E-01
0.2620108E-01	0.2583226E-01	0.2546551E-01	0.2510100E-01	0.2473892E-01	0.2437944E-01
0.2402270E-01	0.2366886E-01	0.2331803E-01	0.2297035E-01	0.2262593E-01	0.2228487E-01
0.2194725E-01	0.2161318E-01	0.2128272E-01	0.2095594E-01	0.2063290E-01	0.2031365E-01
0.1999825E-01					

Figure 23. Group B Sample Problems Program Results (Sheet 27 of 27)

SAMPLE PROBLEM GROUP C

The geometrical relationships for this sample problem are shown in Figure 24. The data sheets are presented in Figure 25 and the results are shown in Figure 26.

Problem 1C

In this problem, a solid surface which could not be created by the program surface generator is entered manually along with the necessary connections data. A cube with four truncated corners, named 5CUBE, is entered in data from a convenient location in its coordinate system, i.e., at the origin, as shown in Figure 24. Only three points were computed and entered as 9TCUBE transformation data to move the surface to the desired position shown over surface 1, 1PLAT5. The factor from 1PLAT5 to 5CUBE9TCUBE is requested as Run #1.

The silhouette generator was used to compute the silhouette from each point in 1PLAT5, and because a detailed output was requested with 6 horizontal and 6 vertical divisions of 1PLAT5, 49 silhouettes were computed as shown in Figure 26. The numbers following each identifying mapping line and mapping point number are the boundary point numbers which form the silhouette when connected together. It was possible, since there are no crossovers in the silhouette, to run this problem in the simple mode in SILFAC at greater speed. The mapping divisions were deliberately set at 6 x 6 to reduce the output; some experimentation is required to determine how many divisions are required to yield the factor to the accuracy desired.

Problem 2C

The silhouette generator requires that all points in surface 2 be above the plane of surface 1 when operating in either the simple or complex mode. A view of 5CUBE in its original position from 1PLAT5 clearly shows part of 5CUBE below the surface of 1PLAT5; those points below the plane of 1PLAT5 are set to +.05 as the diagnostic indicates, and the factor computed as usual. Note that this case is a valid bisection, but would not be if 1PLAT5 were skewed relative to the vertical centerline of 5CUBE. A standard output is elicited by the use of code character "N" and the special increment of 2 by use of "11" for the horizontal and vertical mapping increment specifications.

Problem 3C

A diagnostic is elicited when the factor is requested <u>from</u> class 2, 5, 7, 8 or 9 data (including nonplanar class 6).

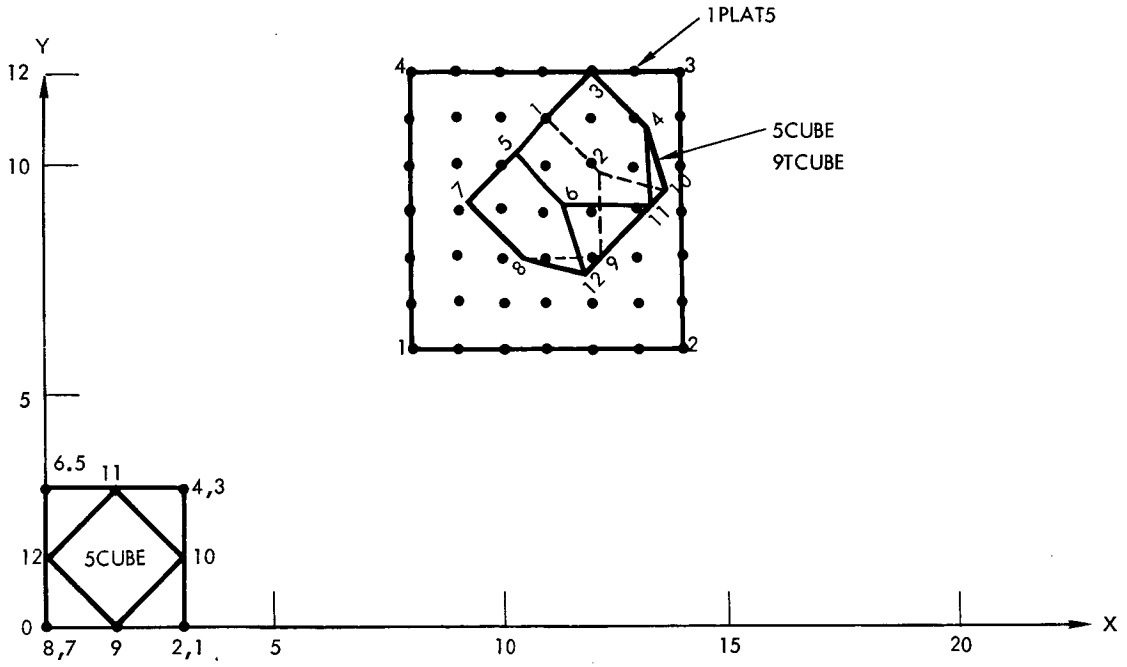

TOP VIEW

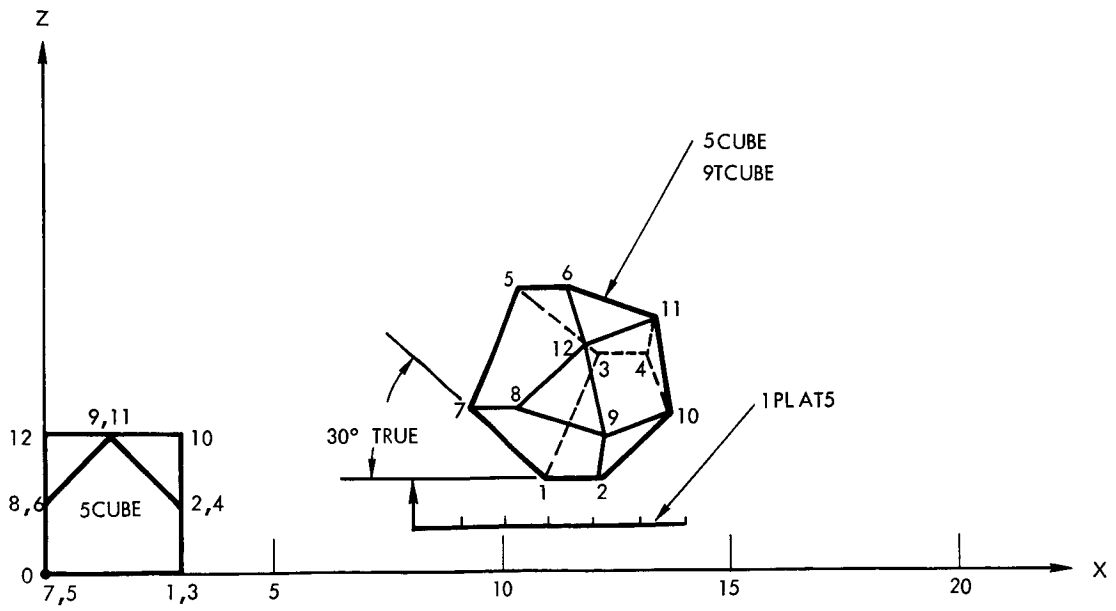

SIDE VIEW

Figure 24. Group C Sample Problems Geometry

FORTRAN FIXED 10 DIGIT DECIMAL DATA

DECK NO. GROUP C PROGRAMMER K.A. TOUPS DATE 7/31/65 PAGE 9 of 28 JOB NO. 2699-40

	NUMBER	IDENTIFICATION	DESCRIPTION DO NOT KEY PUNCH
1	TNAA CΦNFAC		
13	II REPΦRT $A		
25	MPLE PRΦBLEM		
37	S GRΦUP C		
49	K.A.TΦUP$,7/	73 80	
61	31/65	301	
1	1PLAT5		
13	6X6 PLATE PA		
25	RALLEL TΦ XY		
37	PLANE		
49		73 80	
61		302	
1	$DC=4,8,6,		
13	1,14,6,1,14,		
25	12,1,8,12,1$		
37			
49		73 80	
61		303	
1	5CUBE		
13	3 UNIT CUBE,		
25	UPPER CΦRNER		
37	$ TRUNCATED		
49		73 80	
61		304	

Figure 25. Group C Sample Problems Input Data Code Sheets (Sheet 1 of 3)

NORTH AMERICAN AVIATION, INC.

SPACE and INFORMATION SYSTEMS DIVISION

FORTRAN FIXED 10 DIGIT DECIMAL DATA

DECK NO. GROUP C PROGRAMMER K.A. TOUPS DATE 7/31/65 PAGE 10 of 28 JOB NO. 2699-40

	NUMBER	IDENTIFICATION	DESCRIPTION DO NOT KEY PUNCH
1	$DC=12,3,0		SEE FIGURE 16 FOR FORMATING
13	,0,2,7,3,0		
25	,3,0,1.5,1,9		
37	,10,0,3,3,0,		
49	5,1,4,0,3,3,	73 80	
61	1.5,10,11,3,	305	
1	0,0,3,0,3,7		
13	,6,0,0,3,1.5		
25	,5,11,12,0,0		
37	,0,0,1,5,8,0		
49	,0,0,1.5,7,9	73 80	
61	,12,0,1.5,0,	306	
1	3,2,8,10,12		
13	,3,1.5,3,2,9		
25	,11,4,1.5,3,		
37	3,10,12,6,4,		
49	0,1.5,3,9,8,	73 80	
61	6,11$	307	
1	9TCUBE		STANDARD MODE OF ENTRY USED
13	TRAN$F		HERE
25	ΦRM$ 5CUBE T		
37	Φ 1$T QUAD		
49		73 80	
61		308	

Figure 25. Group C Sample Problems Input Data Code Sheets (Sheet 2 of 3)

NORTH AMERICAN AVIATION, INC.
SPACE and INFORMATION SYSTEMS DIVISION

FORTRAN FIXED 10 DIGIT DECIMAL DATA

DECK NO. GROUP C PROGRAMMER K.A. TOUPS DATE 7/31/65 PAGE 11 of 28 JOB NO. 2699-40

	NUMBER	IDENTIFICATION	DESCRIPTION DO NOT KEY PUNCH
1	1 . 0		
13	1 1 . 0		
25	1 1 . 0		
37	2 . 0		
49	2 . 0	73 80	
61	1 2 . 0 6 0 6 6 0 2	3 0 9	
1	9 . 9 3 9 3 3 9 8		
13	2 . 0		
25	7 . 0		
37	9 . 1 6 2 8 8 3 5		
49	9 . 1 6 2 8 8 3 5	73 80	
61	3 . 5	3 1 0	
1	1 P L A T 5 5 C U B E		PROBLEM 1C
13	9 T C U B E		
25	D 1 1		
37	1 P L A T 5 5 C U B E		PROBLEM 2C
49		73 80	
61	N 1 1 1 1	3 1 1	
1	5 C U B E 1 P L A T 5		PROBLEM 3C
13			
25			
37			
49		73 80	
61		3 1 2	

Figure 25. Group C Sample Problems Input Data Code Sheets (Sheet 3 of 3)

NORTH AMERICAN AVIATION, INC.
SPACE and INFORMATION SYSTEMS DIVISION

```
                    NAA SPACE AND INFORMATION SYSTEMS DIVISION
                RADIANT-INTERCHANGE CONFIGURATION FACTOR PROGRAM

                                C O N F A C   I I

          NAA CONFAC II REPORT SAMPLE PROBLEMS GROUP C    K.A.TOUPS,7/31/65

                                I N P U T   D A T A


***** DATA NAME- *1PLAT5       * 6X6 PLATE PARALLEL TO XY PLANE

POINT        X              Y              Z              POINT        X              Y              Z
        0.8000000E 01  0.6000000E 01  0.2000000E 01---(INTERNALLY GENERATED ORIENTATION VECTOR)
   1    0.8000000E 01  0.6000000E 01  0.1000000E 01        2    0.1400000E 02  0.6000000E 01  0.1000000E 01
   3    0.1400000E 02  0.1200000E 02  0.1000000E 01        4    0.8000000E 01  0.1200000E 02  0.1000000E 01


***** DATA NAME- *5CUBE        * 3 UNIT CUBE,UPPER CORNERS TRUNCATED

POINT        X              Y              Z              POINT        X              Y              Z
   1    0.3000000E 01  0.0000000E-38  0.0000000E-38        2    0.3000000E 01  0.0000000E-38  0.1500000E 01
   3    0.3000000E 01  0.3000000E 01  0.0000000E-38        4    0.3000000E 01  0.3000000E 01  0.1500000E 01
   5    0.0000000E-38  0.3000000E 01  0.0000000E-38        6    0.0000000E-38  0.3000000E 01  0.1500000E 01
   7    0.0000000E-38  0.0000000E-38  0.0000000E-38        8    0.0000000E-38  0.0000000E-38  0.1500000E 01
   9    0.1500000E 01  0.0000000E-38  0.3000000E 01       10    0.3000000E 01  0.1500000E 01  0.3000000E 01
  11    0.1500000E 01  0.3000000E 01  0.3000000E 01       12    0.0000000E-38  0.1500000E 01  0.3000000E 01

POINT  CONNECTING POINTS   POINT  CONNECTING POINTS   POINT  CONNECTING POINTS   POINT  CONNECTING POINTS
   1      2,  7,  3,  0       2      1,  9, 10,  0       3      5,  1,  4,  0       4     10, 11,  3,  0
   5      3,  7,  6,  0       6      5, 11, 12,  0       7      1,  5,  8,  0       8      7,  9, 12,  0
   9      2,  5, 10, 12      10      2,  9, 11,  4      11     10, 12,  6,  4      12      9,  8,  6, 11


***** DATA NAME- *9TCUBE       *       TRANSFORMS 5CUBE TO 1ST QUAD

  ANSFORMATION DATA-
```

Figure 26. Group C Sample Problems Program Results (Sheet 1 of 7)

POINT	X	Y	Z	POINT	X	Y	Z
1	0.1100000E 02	0.1100000E 02	0.2000000E 01	2	0.1206066E 02	0.9939340E 01	0.2000000E 01
7	0.9162884E 01	0.9162884E 01	0.3500000E 01				

Figure 26. Group C Sample Problems Program Results (Sheet 2 of 7)

```
NAA CONFAC II REPORT SAMPLE PROBLEMS GROUP C    K.A.TOUPS,7/31/65

RUN NO.    1    DATA USED FOR THIS RUN- *1PLATS*5CUBE *
                                        *       *9TCUBE*
                                        *0     1*      1*

MAPPING      SURFACE 2 SILHOUETTE COMPUTED FROM MAPPING POINT SHOWN
LINE PT
  1   1      12   9   2   1   7   5   6  12
  1   2      12   9  10   2   1   7   5   6  12
  1   3      12   9  10   2   1   7   5   6  12
  1   4      12  11  10   2   1   7   8  12
  1   5      12  11  10   2   1   7   8  12
  1   6      12  11  10   2   1   7   8  12
  1   7      12  11  10   2   1   7   8  12
  2   1      12   9   2   1   7   5   6  12
  2   2      12   9   2   1   7   5   6  12
  2   3      12   9  10   2   1   7   8  12
  2   4      12   9  10   2   1   7   8  12
  2   5      12  11  10   2   1   7   8  12
  2   6      12  11  10   2   1   7   8  12
  2   7      12  11  10   2   1   7   8  12
  3   1      12   9   2   1   7   5   6  12
  3   2      12   9   2   1   7   8  12
  3   3      12   9  10   2   1   7   8  12
  3   4      12   9  10   2   1   7   8  12
  3   5      12   9  10   2   1   7   8  12
  3   6      12  11  10   2   1   7   8  12
  3   7      12  11  10   4   3   1   7   8  12
  4   1       9   2   1   3   5   7   8   9
  4   2       9   2   1   7   8   9
  4   3       9   2   1   7   8   9
  4   4       9  10   2   1   7   8   9
  4   5       9  10   2   1   7   8   9
  4   6       9  10   4   3   1   7   8   9
  4   7       9  12  11  10   4   3   1   7   8   9
  5   1       9   2   1   3   5   7   8   9
  5   2       9   2   1   3   5   7   8   9
  5   3       9   2   1   7   8   9
  5   4       9  10   2   1   7   8   9
```

Figure 26. Group C Sample Problems Program Results (Sheet 3 of 7)

```
 5   5      9  10   4   3   1   7   8   9
 5   6      9  10   4   3   1   7   8   9
 5   7      9  10   4   3   1   7   8   9
 6   1      9   2   1   3   5   7   8   9
 6   2      9   2   1   3   5   7   8   9
 6   3      9   2   1   3   5   7   8   9
 6   4      9   2  10   4   3   5   7   8   9
 6   5      9  10   4   3   1   7   8   9
 6   6      9  10   4   3   1   7   8   9
 6   7      9  10  11   4   3   1   2   9
 7   1      9   2   1   3   5   7   8   9
 7   2      9   2   1   3   5   7   8   9
 7   3      9   2  10   4   3   5   7   8   9
 7   4      9   2  10   4   3   5   7   8   9
 7   5      9  10   4   3   1   7   8   9
 7   6      9  10   4   3   1   2   9
 7   7      9  10  11   4   3   1   2   9

THE FORM FACTOR FROM SURFACE *1PLAT5      * TO SURFACE *5CUBE 9TCUBE* = 0.20970

THE EXCHANGE COEFFICIENT (FA)=   0.75491E 01 SQ UNITS

                 THE MAPPING AREA = 0.3600000E 02 SQ UNITS

THE AREA OF SURFACE *1PLAT5      * = 0.3600000E 02 SQ UNITS.

THE FOLLOWING ARE THE (FINAL) SURFACE COORDINATES USED FOR THE FACTOR COMPUTATION-


***** DATA NAME- *1PLAT5      *

POINT       X              Y              Z              POINT       X              Y              Z
       0.0000000E-38  0.0000000E-38  0.1000000E 01---(INTERNALLY GENERATED ORIENTATION VECTOR)
   1   0.0000000E-38  0.0000000E-38  0.0000000E-38       2   0.6000000E 01  0.0000000E-38  0.0000000E-38
   3   0.6000000E 01  0.6000000E 01  0.0000000E-38       4   0.0000000E-38  0.6000000E 01  0.0000000E-38


***** DATA NAME- *5CUBE 9TCUBE*

POINT       X              Y              Z              POINT       X              Y              Z
```

Figure 26. Group C Sample Problems Program Results (Sheet 4 of 7)

1	0.3000000E 01	0.5000000E 01	0.1000000E 01	2	0.4060660E 01	0.3939340E 01	0.1000000E 01
3	0.4060661E 01	0.6060661E 01	0.3598076E 01	4	0.5121321E 01	0.5000000E 01	0.3598076E 01
5	0.2223543E 01	0.4223543E 01	0.5098077E 01	6	0.3284204E 01	0.3162883E 01	0.5098077E 01
7	0.1162883E 01	0.3162883E 01	0.2500001E 01	8	0.2223543E 01	0.2102222E 01	0.2500001E 01
9	0.4202762E 01	0.1960121E 01	0.1750000E 01	10	0.5651651E 01	0.3409010E 01	0.2299038E 01
11	0.5263422E 01	0.3202762E 01	0.4348076E 01	12	0.3814534E 01	0.1571893E 01	0.3799039E 01

POINT	CONNECTING POINTS	POINT	CONNECTING POINTS	POINT	CONNECTING POINTS	POINT	CONNECTING POINTS
1	2, 7, 3, 0	2	1, 9, 10, 0	3	5, 1, 4, 0	4	10, 11, 3, 0
5	3, 7, 6, 0	6	5, 11, 12, 0	7	1, 5, 8, 0	8	7, 9, 12, 0
9	2, 8, 10, 12	10	2, 9, 11, 4	11	10, 12, 6, 4	12	9, 8, 6, 11

COORDINATES OF POINTS ON BOUNDARY OF SURF *1PLAT5 * FOR EACH Y INTERVAL

X-LEFT	X-RIGHT	Y	X-LEFT	X-RIGHT	Y
0.0000000E-38	0.6000000E 01	0.0000000E-38	0.0000000E-38	0.6000000E 01	0.1000000E 01
0.0000000E-38	0.6000000E 01	0.2000000E 01	0.0000000E-38	0.6000000E 01	0.3000000E 01
0.0000000E-38	0.6000000E 01	0.4000000E 01	0.0000000E-38	0.6000000E 01	0.5000000E 01
0.0000000E-38	0.6000000E 01	0.6000000E 01			

NO. OF HORIZONTAL INCREMENTS= 6 NO. OF VERTICAL INCREMENTS= 6

THE FOLLOWING ARE PLANE POINT CONFIGURATION FACTORS COMPUTED FOR THIS RUN
LOWEST GRID LINE FIRST, FROM X-LEFT TO X-RIGHT.

0.5542873E-01	0.7322677E-01	0.8797614E-01	0.1046541E 00	0.1106668E 00	0.9935261E-01
0.7777964E-01					
0.7041410E-01	0.1026427E 00	0.1477862E 00	0.1783285E 00	0.1793724E 00	0.1513113E 00
0.1085884E 00					
0.7873670E-01	0.1435698E 00	0.2343451E 00	0.2974624E 00	0.2748546E 00	0.2056391E 00
0.1440602E 00					
0.9986020E-01	0.1681766E 00	0.3042028E 00	0.4090476E 00	0.3782529E 00	0.2721937E 00
0.1778483E 00					
0.1146045E 00	0.1867433E 00	0.2718263E 00	0.3895978E 00	0.3953245E 00	0.3070930E 00
0.1880567E 00					
0.1082963E 00	0.1633228E 00	0.2125377E 00	0.2438396E 00	0.3081478E 00	0.2582763E 00
0.1756397E 00					
0.8843642E-01	0.1208731E 00	0.1563164E 00	0.1802528E 00	0.1773333E 00	0.1757886E 00
			0.1340541E 00		

Figure 26. Group C Sample Problems Program Results (Sheet 5 of 7)

```
NAA CONFAC II REPORT SAMPLE PROBLEMS GROUP C    K.A.TOUPS,7/31/65

RUN NO.    2    DATA USED FOR THIS RUN- *1PLAT5*5CUBE *
                                        *      *      *
                                        *N    11*    11*

WARNING---ONE OR MORE ZERO OR NEGATIVE Z-COORDINATES WERE DETECTED IN SURFACE *5CUBE        * AS SEEN FROM
THE REFERENCE PLANE OF SURFACE *1PLAT5       *. A VALUE OF 0.05 WAS USED TO ALLOW THE SILHOUETTE TO
BE DEVELOPED. THE RESULTING SILHOUETTE MAY NOT BE VALID AND THE FACTOR MAY BE INCORRECT.

THE FORM FACTOR FROM SURFACE *1PLAT5       * TO SURFACE *5CUBE        * = 0.00154

THE EXCHANGE COEFFICIENT (FA)=    0.55270E-01 SQ UNITS

                  THE MAPPING AREA = 0.3600000E 02 SQ UNITS

THE AREA OF SURFACE *1PLAT5       * = 0.3600000E 02 SQ UNITS.

ONLY A PART OF SURFACE *5CUBE        * SEES SURFACE *1PLAT5       *
```

Figure 26. Group C Sample Problems Program Results (Sheet 6 of 7)

```
NAA CONFAC II REPORT SAMPLE PROBLEMS GROUP C    K.A.TOUPS,7/31/65

RUN NO.    3    DATA USED FOR THIS RUN- *5CUBE *1PLAT5*
                                        *      *      *
                                        *      *      *

A NONPLANAR SURFACE CANNOT BE USED AS SURFACE 1-THIS RUN ABORTED.
```

Figure 26. Group C Sample Problems Program Results (Sheet 7 of 7)

SAMPLE PROBLEM GROUP D

The geometrical relationships for this sample problem are presented in Figure 27. The data sheets are shown in Figure 28 and the results are presented in Figure 29.

Problem 1D

The referenced figure, Figure 27, shows a truncated-cone-on-cylinder and a disk, skewed with respect to the cylinder-cone centerline. The cylinder-cone is created by the surface generator as 6CYTR, a 32-sided solid in its final position in the unprimed coordinate system. The disk is also internally generated, but because the generator (in its present version) is limited to cross sections parallel to the xy plane, the disk, 3DISKC, had to be transformed to the skewed position by transformation data 9TDSKC. The results are shown in Figure 29. The simple mode was used for processing because no line segment crossovers are present. The warning note concerning the difference between the mapping area and the actual 3DISK surface area is supplied to attract attention to possible errors in surface 1 data entry of the choice of mapping increments. As indicated in the comments on problem 1 of Sample Problem Group C, the coarse increment 6 x 6 was selected to reduce output. A finer increment should probably be used to insure accuracy to the third place, if such is desired. It must be emphasized that the form factor obtained in Run #1 is the factor to the solid figure, 6CYLTR, which, of course, includes the bases. Since the factor to the skin is the desired number, it is necessary to subtract the factors to the ends. The upper end is obviously not seen (f = 0), so the factor to the base only must be obtained. The base is easily created by the surface generator (3DISKB), and it is created with the orientation vector pointing toward the -Z axis, by making YR negative. The factor to the skin of 6CYLTR is obtained by subtracting the results of Run #2 from Run #1, or

$$f_{skin} = f_{total} - f_{base}$$

$$f = 0.18946 - 0.09955$$

$$f = .08991$$

The exchange coefficient is computed in a similar manner.

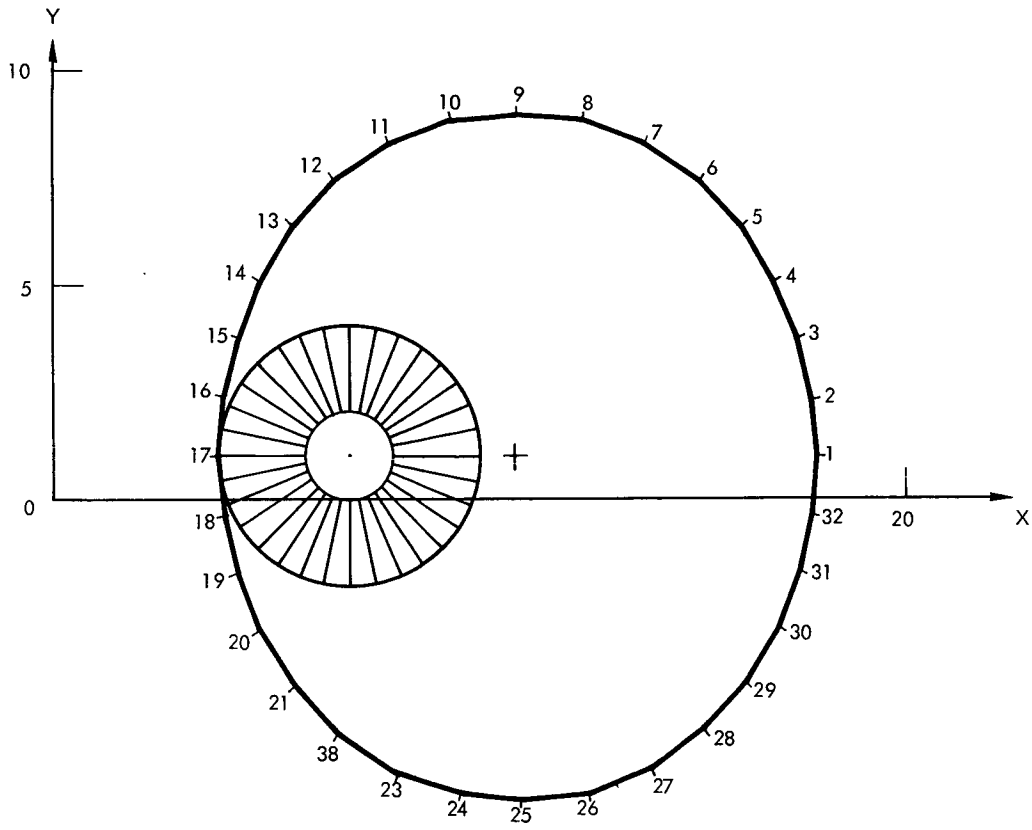

TOP VIEW

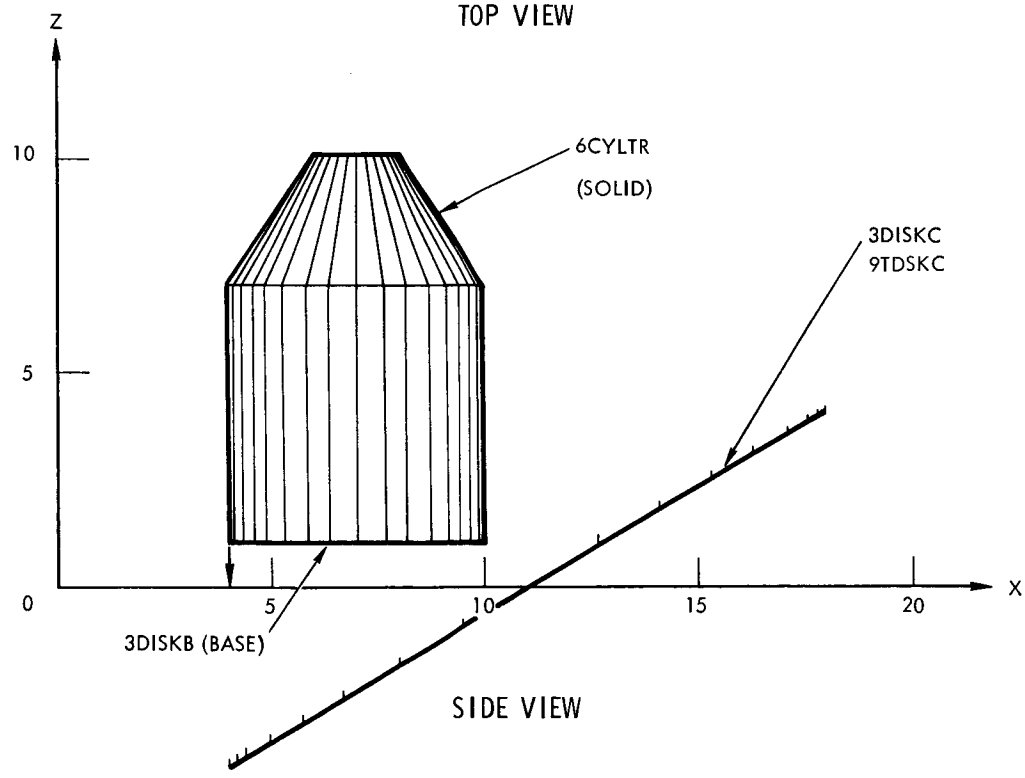

SIDE VIEW

Figure 27. Group D Sample Problems Geometry

FORTRAN FIXED 10 DIGIT DECIMAL DATA

DECK NO. GROUP D PROGRAMMER K.A. TOUPS DATE 7/31/65 PAGE 12 of 28 JOB NO. 2699-40

	NUMBER	IDENTIFICATION	DESCRIPTION DO NOT KEY PUNCH
1	TNAA CΦNFAC		
13	II REPΦRT $A		
25	MPLE PRΦBLEM		
37	$ GRΦUP D		
49	K.A.TΦUP$,7/	73 80	
61	31/65	401	
1	3DI$KC		
13			
25	RADIU$ ΦF 8		
37	UNIT$, 32 $I		
49	DE$	73 80	
61		402	
1	32.0		
13	0.0		
25	0.0		
37	0.0		
49	8.0	73 80	
61	8.0	403	
1	6CYLTR		
13	3 UNIT$ RADI		
25	U$ CYLINDER		
37	WITH TRUNCAT		
49	ED CΦNE ΦNT	73 80	
61	ΦP	404	

Figure 28. Group D Sample Problems Input Data Code Sheets (Sheet 1 of 3)

NORTH AMERICAN AVIATION, INC.
SPACE and INFORMATION SYSTEMS DIVISION

FORTRAN FIXED 10 DIGIT DECIMAL DATA

DECK NO. GROUP D PROGRAMMER K.A. TOUPS DATE 7/31/65 PAGE 13 of 28 JOB NO. 2699-40

	NUMBER	IDENTIFICATION	DESCRIPTION DO NOT KEY PUNCH
1	$D C=32,3,7		
13	,1,1,3,3,7,3		
25	,3,10,1,1$		
37			
49		73 80	
61		405	
1	3DI$KB		
13			
25	BA$E ΦF CYLI		
37	NDER PΦINTIN		
49	G TΦWARD -Z	73 80	
61	AXI$	406	
1	32.0		
13	7.0		
25	1.0		
37	1.0		
49	3.0	73 80	
61	-3.0	407	
1	9TD$KC		
13	MΦVE$ DI$KC		
25	TΦ $KEWED PΦ		
37	SITIΦN FRΦM		
49	PΦ$ITIΦN CRE	73 80	
61	ATED	408	

Figure 28. Group D Sample Problems Input Data Code Sheets (Sheet 2 of 3)

NORTH AMERICAN AVIATION, INC.
SPACE and INFORMATION SYSTEMS DIVISION

FORTRAN FIXED 10 DIGIT DECIMAL DATA

DECK NO. GROUP D PROGRAMMER K.A. TOUPS DATE 7/31/65 PAGE 14 of 28 JOB NO. 2699-40

	NUMBER	IDENTIFICATION	DESCRIPTION DO NOT KEY PUNCH
1	$ D C = 1 , 1 7 . 9		
13	2 8 , 1 , 4 , 9 , 1 1 ,		
25	9 , 0 , 2 5 , 1 1 , - 7		
37	, 0 $		
49		73 80	
61		4 0 9	
1	3 D I $ K C 6 C Y L T R		
13	9 T D $ K C		
25	D 1 1		PROBLEM 1D
37	3 D I $ K C 3 D I $ K B		
49	9 T D $ K C	73 80	
61	N 1 1	4 1 0	
1			
13			
25			
37			
49		73 80	
61			
1			
13			
25			
37			
49		73 80	
61			

Figure 28. Group D Sample Problems Input Data Code Sheets (Sheet 3 of 3)

NORTH AMERICAN AVIATION, INC.

SPACE and INFORMATION SYSTEMS DIVISION

NAA SPACE AND INFORMATION SYSTEMS DIVISION
RADIANT-INTERCHANGE CONFIGURATION FACTOR PROGRAM

C O N F A C I I

NAA CONFAC II REPORT SAMPLE PROBLEMS GROUP D K.A.TOUPS,7/31/65

I N P U T D A T A

***** DATA NAME- *3DISKC * RADIUS OF 8 UNITS, 32 SIDES

SURFACE SPECIFICATIONS-

NO OF X-SECTIONS = 1 NO OF X-SECTION BOUNDARY DIVISIONS = 32

LOCATION OF VERTICAL CENTERLINE, X= 0.0000000E-38, Y= 0.0000000E-38

X-SECTION NO.	X-AXIS RADIUS	Y-AXIS RADIUS	ELEVATION ABOVE XY PLANE
1	0.8000000E 01	0.8000000E 01	0.0000000E-38

THE FOLLOWING INTERNALLY GENERATED SURFACE DATA RESULTED FROM THE ABOVE SPECIFICATIONS-

POINT	X	Y	Z	POINT	X	Y	Z
	0.8000000E 01	0.0000000E-38	0.1000000E 01---(INTERNALLY GENERATED ORIENTATION VECTOR)				
1	0.8000000E 01	0.0000000E-38	0.0000000E-38	2	0.7846282E 01	0.1560723E 01	0.0000000E-38
3	0.7391036E 01	0.3061467E 01	0.0000000E-38	4	0.6651757E 01	0.4444562E 01	0.0000000E-38
5	0.5656854E 01	0.5656854E 01	0.0000000E-38	6	0.4444562E 01	0.6651757E 01	0.0000000E-38
7	0.3061467E 01	0.7391036E 01	0.0000000E-38	8	0.1560723E 01	0.7846282E 01	0.0000000E-38
9	0.2539080E-12	0.8000000E 01	0.0000000E-38	10	-0.1560723E 01	0.7846282E 01	0.0000000E-38
11	-0.3061467E 01	0.7391036E 01	0.0000000E-38	12	-0.4444562E 01	0.6651757E 01	0.0000000E-38
13	-0.5656854E 01	0.5656854E 01	0.0000000E-38	14	-0.6651757E 01	0.4444562E 01	0.0000000E-38
15	-0.7391036E 01	0.3061467E 01	0.0000000E-38	16	-0.7846282E 01	0.1560723E 01	0.0000000E-38
17	-0.8000000E 01	0.5074829E-12	0.0000000E-38	18	-0.7846282E 01	-0.1560723E 01	0.0000000E-38
19	-0.7391036E 01	-0.3061467E 01	0.0000000E-38	20	-0.6651757E 01	-0.4444562E 01	0.0000000E-38
21	-0.5656854E 01	-0.5656854E 01	0.0000000E-38	22	-0.4444562E 01	-0.6651757E 01	0.0000000E-38
23	-0.3061467E 01	-0.7391036E 01	0.0000000E-38	24	-0.1560723E 01	-0.7846282E 01	0.0000000E-38
25	-0.7609469E-12	-0.8000000E 01	0.0000000E-38	26	0.1560723E 01	-0.7846282E 01	0.0000000E-38
27	0.3061467E 01	-0.7391036E 01	0.0000000E-38	28	0.4444562E 01	-0.6651757E 01	0.0000000E-38
29	0.5656854E 01	-0.5656854E 01	0.0000000E-38	30	0.6651757E 01	-0.4444562E 01	0.0000000E-38
31	0.7391036E 01	-0.3061467E 01	0.0000000E-38	32	0.7846282E 01	-0.1560723E 01	0.0000000E-38

Figure 29. Group D Sample Problems Program Results (Sheet 1 of 13)

***** DATA NAME- #6CYLTR * 3 UNITS RADIUS CYLINDER WITH TRUNCATED CONE ON TOP

SURFACE SPECIFICATIONS-

NO OF X-SECTIONS = 3 NO OF X-SECTION BOUNDARY DIVISIONS = 32

LOCATION OF VERTICAL CENTERLINE, X= 0.7000000E 01, Y= 0.1000000E 01

X-SECTION NO.	X-AXIS RADIUS	Y-AXIS RADIUS	ELEVATION ABOVE XY PLANE
1	0.3000000E 01	0.3000000E 01	0.1000000E 01
2	0.3000000E 01	0.3000000E 01	0.7000000E 01
3	0.1000000E 01	0.1000000E 01	0.1000000E 02

THE FOLLOWING INTERNALLY GENERATED SURFACE DATA RESULTED FROM THE ABOVE SPECIFICATIONS-

POINT	X	Y	Z	POINT	X	Y	Z
1	0.1000000E 02	0.1000000E 01	0.1000000E 01	2	0.1000000E 02	0.1000000E 01	0.7000000E 01
3	0.8000000E 01	0.1000000E 01	0.1000000E 02	4	0.9942356E 01	0.1585271E 01	0.1000000E 01
5	0.9942356E 01	0.1585271E 01	0.7000000E 01	6	0.7980785E 01	0.1195090E 01	0.1000000E 02
7	0.9771639E 01	0.2148050E 01	0.1000000E 01	8	0.9771639E 01	0.2148050E 01	0.7000000E 01
9	0.7923880E 01	0.1382683E 01	0.1000000E 02	10	0.9494409E 01	0.2666711E 01	0.1000000E 01
11	0.9494409E 01	0.2666711E 01	0.7000000E 01	12	0.7831470E 01	0.1555570E 01	0.1000000E 02
13	0.9121320E 01	0.3121320E 01	0.1000000E 01	14	0.9121320E 01	0.3121320E 01	0.7000000E 01
15	0.7707107E 01	0.1707107E 01	0.1000000E 02	16	0.8666711E 01	0.3494409E 01	0.1000000E 01
17	0.8666711E 01	0.3494409E 01	0.7000000E 01	18	0.7555570E 01	0.1831470E 01	0.1000000E 02
19	0.8148050E 01	0.3771639E 01	0.1000000E 01	20	0.8148050E 01	0.3771639E 01	0.7000000E 01
21	0.7382683E 01	0.1923880E 01	0.1000000E 02	22	0.7585271E 01	0.3942356E 01	0.1000000E 01
23	0.7585271E 01	0.3942356E 01	0.7000000E 01	24	0.7195090E 01	0.1980785E 01	0.1000000E 02
25	0.7000000E 01	0.4000000E 01	0.1000000E 01	26	0.7000000E 01	0.4000000E 01	0.7000000E 01
27	0.7000000E 01	0.2000000E 01	0.1000000E 02	28	0.6414729E 01	0.3942356E 01	0.1000000E 01
29	0.6414729E 01	0.3942356E 01	0.7000000E 01	30	0.6804910E 01	0.1980785E 01	0.1000000E 02
31	0.5851950E 01	0.3771639E 01	0.1000000E 01	32	0.5851950E 01	0.3771639E 01	0.7000000E 01
33	0.6617317E 01	0.1923880E 01	0.1000000E 02	34	0.5333289E 01	0.3494409E 01	0.1000000E 01
35	0.5333289E 01	0.3494409E 01	0.7000000E 01	36	0.6444430E 01	0.1831470E 01	0.1000000E 02
37	0.4878680E 01	0.3121320E 01	0.1000000E 01	38	0.4878680E 01	0.3121320E 01	0.7000000E 01
39	0.6292893E 01	0.1707107E 01	0.1000000E 02	40	0.4505591E 01	0.2666711E 01	0.1000000E 01
41	0.4505591E 01	0.2666711E 01	0.7000000E 01	42	0.6168530E 01	0.1555570E 01	0.1000000E 02
43	0.4228361E 01	0.2148050E 01	0.1000000E 01	44	0.4228361E 01	0.2148050E 01	0.7000000E 01
45	0.6076120E 01	0.1382683E 01	0.1000000E 02	46	0.4057644E 01	0.1585271E 01	0.1000000E 01
47	0.4057644E 01	0.1585271E 01	0.7000000E 01	48	0.6019215E 01	0.1195090E 01	0.1000000E 02
49	0.4000000E 01	0.1000000E 01	0.1000000E 01	50	0.4000000E 01	0.1000000E 01	0.7000000E 01

Figure 29. Group D Sample Problems Program Results (Sheet 2 of 13)

51	0.6000000E 01	0.1000000E 01	0.1000000E 02	52	0.4057644E 01	0.4147290E 00	0.1000000E 01
53	0.4057644E 01	0.4147290E 00	0.7000000E 01	54	0.6019215E 01	0.8049097E 00	0.1000000E 02
55	0.4228361E 01	-0.1480503E 00	0.1000000E 01	56	0.4228361E 01	-0.1480503E 00	0.7000000E 01
57	0.6076120E 01	0.6173166E 00	0.1000000E 02	58	0.4505591E 01	-0.6667107E 00	0.1000000E 01
59	0.4505591E 01	-0.6667107E 00	0.7000000E 01	60	0.6168530E 01	0.4444298E 00	0.1000000E 02
61	0.4878680E 01	-0.1121320E 01	0.1000000E 01	62	0.4878680E 01	-0.1121320E 01	0.7000000E 01
63	0.6292893E 01	0.2928932E 00	0.1000000E 02	64	0.5333289E 01	-0.1494409E 01	0.1000000E 01
65	0.5333289E 01	-0.1494409E 01	0.7000000E 01	66	0.6444430E 01	0.1685304E 00	0.1000000E 02
67	0.5851950E 01	-0.1771639E 01	0.1000000E 01	68	0.5851950E 01	-0.1771639E 01	0.7000000E 01
69	0.6617317E 01	0.7612047E-01	0.1000000E 02	70	0.6414729E 01	-0.1942356E 01	0.1000000E 01
71	0.6414729E 01	-0.1942356E 01	0.7000000E 01	72	0.6804910E 01	0.1921472E-01	0.1000000E 02
73	0.7000000E 01	-0.2000000E 01	0.1000000E 01	74	0.7000000E 01	-0.2000000E 01	0.7000000E 01
75	0.7000000E 01	0.1776357E-14	0.1000000E 02	76	0.7585271E 01	-0.1942356E 01	0.1000000E 01
77	0.7585271E 01	-0.1942356E 01	0.7000000E 01	78	0.7195090E 01	0.1921472E-01	0.1000000E 02
79	0.8148050E 01	-0.1771639E 01	0.1000000E 01	80	0.8148050E 01	-0.1771639E 01	0.7000000E 01
81	0.7382683E 01	0.7612047E-01	0.1000000E 02	82	0.8666711E 01	-0.1494409E 01	0.1000000E 01
83	0.8666711E 01	-0.1494409E 01	0.7000000E 01	84	0.7555570E 01	0.1685304E 00	0.1000000E 02
85	0.9121320E 01	-0.1121320E 01	0.1000000E 01	86	0.9121320E 01	-0.1121320E 01	0.7000000E 01
87	0.7707107E 01	0.2928932E 00	0.1000000E 02	88	0.9494409E 01	-0.6667107E 00	0.1000000E 01
89	0.9494409E 01	-0.6667107E 00	0.7000000E 01	90	0.7831470E 01	0.4444298E 00	0.1000000E 02
91	0.9771639E 01	-0.1480503E 00	0.1000000E 01	92	0.9771639E 01	-0.1480503E 00	0.7000000E 01
93	0.7923880E 01	0.6173166E 00	0.1000000E 02	94	0.9942356E 01	0.4147290E 00	0.1000000E 01
95	0.9942356E 01	0.4147290E 00	0.7000000E 01	96	0.7980785E 01	0.8049097E 00	0.1000000E 02

POINT	CONNECTING POINTS	POINT	CONNECTING POINTS	POINT	CONNECTING POINTS	POINT	CONNECTING POINTS
1	4, 2, 94, 0	2	5, 3, 95, 1	3	6, 0, 96, 2	4	7, 5, 1, 0
5	8, 6, 2, 4	6	9, 0, 3, 5	7	10, 8, 4, 0	8	11, 9, 5, 7
9	12, 0, 6, 8	10	13, 11, 7, 0	11	14, 12, 8, 10	12	15, 0, 9, 11
13	16, 14, 10, 0	14	17, 15, 11, 13	15	18, 0, 12, 14	16	19, 17, 13, 0
17	20, 18, 14, 16	18	21, 0, 15, 17	19	22, 20, 16, 0	20	23, 21, 17, 19
21	24, 0, 18, 20	22	25, 23, 19, 0	23	26, 24, 20, 22	24	27, 0, 21, 23
25	28, 26, 22, 0	26	29, 27, 23, 25	27	30, 0, 24, 26	28	31, 29, 25, 0
29	32, 30, 26, 28	30	33, 0, 27, 29	31	34, 32, 28, 0	32	35, 33, 29, 31
33	36, 0, 30, 32	34	37, 35, 31, 0	35	38, 36, 32, 34	36	39, 0, 33, 35
37	40, 38, 34, 0	38	41, 39, 35, 37	39	42, 0, 36, 38	40	43, 41, 37, 0
41	44, 42, 38, 40	42	45, 0, 39, 41	43	46, 44, 40, 0	44	47, 45, 41, 43
45	48, 0, 42, 44	46	49, 47, 43, 0	47	50, 48, 44, 46	48	51, 0, 45, 47
49	52, 50, 46, 0	50	53, 51, 47, 49	51	54, 0, 48, 50	52	55, 53, 49, 0
53	56, 54, 50, 52	54	57, 0, 51, 53	55	58, 56, 52, 0	56	59, 57, 53, 55
57	60, 0, 54, 56	58	61, 59, 55, 0	59	62, 60, 56, 58	60	63, 0, 57, 59
61	64, 62, 58, 0	62	65, 63, 59, 61	63	66, 0, 60, 62	64	67, 65, 61, 0
65	68, 66, 62, 64	66	69, 0, 63, 65	67	70, 68, 64, 0	68	71, 69, 65, 67

Figure 29. Group D Sample Problems Program Results (Sheet 3 of 13)

69	72, 0, 66, 68	70	73, 71, 67, 0	71	74, 72, 68, 70	72	75, 0, 69, 71
73	76, 74, 70, 0	74	77, 75, 71, 73	75	78, 0, 72, 74	76	79, 77, 73, 0
77	80, 78, 74, 76	78	81, 0, 75, 77	79	82, 80, 76, 0	80	83, 81, 77, 79
81	84, 0, 78, 80	82	85, 83, 79, 0	83	86, 84, 80, 82	84	87, 0, 81, 83
85	88, 86, 82, 0	86	89, 87, 83, 85	87	90, 0, 84, 86	88	91, 89, 85, 0
89	92, 90, 86, 88	90	93, 0, 87, 89	91	94, 92, 88, 0	92	95, 93, 89, 91
93	96, 0, 90, 92	94	1, 95, 91, 0	95	2, 96, 92, 94	96	3, 0, 93, 95

```
***** DATA NAME- *3DISK8      *              BASE OF CYLINDER POINTING TOWARD -Z AXIS

SURFACE SPECIFICATIONS-

NO OF X-SECTIONS =  1          NO OF X-SECTION BOUNDARY DIVISIONS = 32

LOCATION OF VERTICAL CENTERLINE, X= 0.7000000E 01, Y= 0.1000000E 01

X-SECTION NO.      X-AXIS RADIUS      Y-AXIS RADIUS      ELEVATION ABOVE XY PLANE
     1             0.3000000E 01     -0.3000000E 01      0.1000000E 01

THE FOLLOWING INTERNALLY GENERATED SURFACE DATA RESULTED FROM THE ABOVE SPECIFICATIONS-

POINT        X              Y              Z              POINT        X              Y              Z
        0.1000000E 02  0.1000000E 01 -0.0000000E-38---(INTERNALLY GENERATED ORIENTATION VECTOR)
   1    0.1000000E 02  0.1000000E 01  0.1000000E 01      2    0.9942356E 01  0.4147290E 00  0.1000000E 01
   3    0.9771639E 01 -0.1480503E 00  0.1000000E 01      4    0.9494409E 01 -0.6667107E 00  0.1000000E 01
   5    0.9121320E 01 -0.1121320E 01  0.1000000E 01      6    0.8666711E 01 -0.1494409E 01  0.1000000E 01
   7    0.8148050E 01 -0.1771639E 01  0.1000000E 01      8    0.7585271E 01 -0.1942356E 01  0.1000000E 01
   9    0.7000000E 01 -0.2000000E 01  0.1000000E 01     10    0.6414729E 01 -0.1942356E 01  0.1000000E 01
  11    0.5851950E 01 -0.1771639E 01  0.1000000E 01     12    0.5333289E 01 -0.1494409E 01  0.1000000E 01
  13    0.4878680E 01 -0.1121320E 01  0.1000000E 01     14    0.4505591E 01 -0.6667107E 00  0.1000000E 01
  15    0.4228361E 01 -0.1480503E 00  0.1000000E 01     16    0.4057644E 01  0.4147290E 00  0.1000000E 01
  17    0.4000000E 01  0.1000000E 01  0.1000000E 01     18    0.4057644E 01  0.1585271E 01  0.1000000E 01
  19    0.4228361E 01  0.2148050E 01  0.1000000E 01     20    0.4505591E 01  0.2666711E 01  0.1000000E 01
  21    0.4878680E 01  0.3121320E 01  0.1000000E 01     22    0.5333289E 01  0.3494409E 01  0.1000000E 01
  23    0.5851950E 01  0.3771639E 01  0.1000000E 01     24    0.6414729E 01  0.3942356E 01  0.1000000E 01
  25    0.7000000E 01  0.4000000E 01  0.1000000E 01     26    0.7585271E 01  0.3942356E 01  0.1000000E 01
  27    0.8148050E 01  0.3771639E 01  0.1000000E 01     28    0.8666711E 01  0.3494409E 01  0.1000000E 01
  29    0.9121320E 01  0.3121320E 01  0.1000000E 01     30    0.9494409E 01  0.2666711E 01  0.1000000E 01
  31    0.9771639E 01  0.2148050E 01  0.1000000E 01     32    0.9942356E 01  0.1585271E 01  0.1000000E 01
```

Figure 29. Group D Sample Problems Program Results (Sheet 4 of 13)

```
***** DATA NAME- *9TDSKC        * MOVES DISKC TO SKEWED POSITION FROM POSITION CREATED

TRANSFORMATION DATA-

POINT        X              Y              Z              POINT        X              Y              Z
   1   0.1792800E 02  0.1000000E 01  0.4000000E 01   '    9   0.1100000E 02  0.9000000E 01  0.0000000E-38
  25   0.1100000E 02 -0.7000000E 01  0.0000000E-38
```

Figure 29. Group D Sample Problems Program Results (Sheet 5 of 13)

```
NAA CONFAC II REPORT SAMPLE PROBLEMS GROUP D   K.A.TOUPS,7/31/65

RUN NO.   1   DATA USED FOR THIS RUN- *3DISKC*6CYLTR*
                                      *9TDSKC*      *
                                      *D    1*     1*

MAPPING      SURFACE 2 SILHOUETTE COMPUTED FROM MAPPING POINT SHOWN
LINE PT
  1  1       6   9  12  15  18  21  20  23  22  19  16  13  10   7   4   1  94  91  88  85  82  79  76  77
             80  81  84  87  90  93  96   3   6
  1  2       6   9  12  15  18  21  20  23  22  19  16  13  10   7   4   1  94  91  88  85  82  79  80  83
             84  87  90  93  96   3   6
  1  3       6   9  12  15  18  21  20  23  22  19  16  13  10   7   4   1  94  91  88  85  82  79  80  83
             84  87  90  93  96   3   6
  1  4       6   9  12  15  18  21  20  23  22  19  16  13  10   7   4   1  94  91  88  85  82  79  80  83
             84  87  90  93  96   3   6
  1  5       6   9  12  15  18  21  20  23  22  19  16  13  10   7   4   1  94  91  88  85  82  79  80  83
             84  87  90  93  96   3   6
  1  6       6   9  12  15  18  21  20  23  22  19  16  13  10   7   4   1  94  91  88  85  82  79  80  83
             84  87  90  93  96   3   6
  1  7       6   9  12  15  18  21  20  23  22  19  16  13  10   7   4   1  94  91  88  85  82  79  80  83
             84  87  90  93  96   3   6
  2  1       6   9   8  11  14  13  10   7   4   1  94  91  88  85  82  79  76  73  70  71  74  75  78  81
             84  87  90  93  96   3   6
  2  2       6   9  12  11  14  17  16  13  10   7   4   1  94  91  88  85  82  79  76  73  74  77  78  81
             84  87  90  93  96   3   6
  2  3       6   9  12  15  14  17  16  13  10   7   4   1  94  91  88  85  82  79  76  77  80  83  84  87
             90  93  96   3   6
  2  4       6   9  12  15  14  17  20  23  22  19  16  13  10   7   4   1  94  91  88  85  82  79  80  83
             86  87  90  93  96   3   6
  2  5       6   9  12  15  18  21  20  23  26  25  22  19  16  13  10   7   4   1  94  91  88  85  82  83
             86  89  90  93  96   3   6
  2  6       6   9  12  15  18  21  24  23  26  29  28  25  22  19  16  13  10   7   4   1  94  91  88  85
             86  89  92  93  96   3   6
  2  7       6   9  12  15  18  21  24  27  26  29  32  31  28  25  22  19  16  13  10   7   4   1  94  91
             88  89  92  95  96   3   6
  3  1       5   8   7   4   1  94  91  88  85  82  79  76  73  70  67  64  65  68  71  74  75  78  81  84
             87  90  93  96   3   2   5
  3  2       5   8  11  10   7   4   1  94  91  88  85  82  79  76  73  70  71  74  77  80  81  84  87  90
             93  96   3   2   5
```

Figure 29. Group D Sample Problems Program Results (Sheet 6 of 13)

3	3	5	8	11	14	13	10	7	4	1	94	91	88	85	82	79	76	77	80	83	86	89	90	93	96	
		3	2	5																						
3	4	5	8	11	14	17	20	19	16	13	10	7	4	1	94	91	88	85	82	83	86	89	92	95	2	
		5																								
3	5	5	8	11	14	17	20	23	26	25	22	19	16	13	10	7	4	1	94	91	88	89	92	95	2	
		5																								
3	6	5	6	9	12	15	18	21	20	23	26	29	32	31	28	25	22	19	16	13	10	7	4	1	94	
		91	92	95	2	5																				
3	7	5	6	9	12	15	18	21	24	27	30	29	32	35	34	37	40	43	46	49	52	55	58	61	64	
		67	70	73	76	79	82	85	88	91	92	95	2	5												
4	1	2	5	4	7	10	13	16	19	22	25	28	31	34	37	40	43	46	49	52	55	58	61	62	65	
		68	71	72	75	78	81	84	87	90	93	92	95	2												
4	2	2	5	4	7	10	13	16	19	22	25	28	31	34	37	40	43	46	49	52	55	58	61	64	67	
		68	71	74	77	80	83	86	89	92	95	2														
4	3	2	5	8	7	10	13	16	19	22	25	28	31	34	37	40	43	46	49	52	55	58	61	64	67	
		70	73	74	77	80	83	86	89	92	95	2														
4	4	2	5	8	11	14	13	16	19	22	25	28	31	34	37	40	43	46	49	52	55	58	61	64	67	
		70	73	76	79	82	85	86	89	92	95	2														
4	5	2	5	8	11	14	17	20	23	26	25	28	31	34	37	40	43	46	49	52	55	58	61	64	67	
		70	73	76	79	82	85	88	91	94	95	2														
4	6	2	5	8	11	14	17	20	23	26	29	32	31	34	37	40	43	46	49	52	55	58	61	64	67	
		70	73	76	79	82	85	88	91	94	95	2														
4	7	2	5	8	11	14	15	18	21	24	27	26	29	32	35	38	37	40	43	46	49	52	55	58	61	
		64	67	70	73	76	79	82	85	88	91	94	1	2												
5	1	1	4	7	10	13	16	19	22	25	28	31	34	37	40	43	46	49	52	55	58	59	62	65	68	
		71	74	77	80	83	86	89	92	95	2	1														
5	2	1	4	7	10	13	16	19	22	25	28	31	34	37	40	43	46	49	52	55	58	61	64	65	68	
		71	74	77	80	83	86	89	92	95	94	1														
5	3	1	4	7	10	13	16	19	22	25	28	31	34	37	40	43	46	49	52	55	58	61	64	67	70	
		73	76	77	80	83	86	89	92	91	94	1														
5	4	1	4	7	10	13	16	19	22	25	28	31	34	37	40	43	46	49	52	55	58	61	64	67	70	
		73	76	79	82	85	88	91	94	1																
5	5	1	4	7	10	13	16	19	22	25	28	31	34	37	40	43	46	49	52	55	58	61	64	67	70	
		73	76	79	82	85	88	91	94	1																
5	6	1	4	7	8	11	14	17	20	23	26	29	32	35	34	37	40	43	46	49	52	55	58	61	64	
		67	70	73	76	79	82	85	88	91	94	1														
5	7	1	4	5	8	11	14	17	20	23	26	29	32	35	38	41	40	43	46	49	52	55	58	61	64	
		67	70	73	76	79	82	85	88	91	94	1														
6	1	1	4	7	10	13	16	19	22	25	28	31	34	37	40	43	46	49	52	55	56	59	62	65	68	
		71	74	77	80	83	86	89	88	91	94	1														
6	2	1	4	7	10	13	16	19	22	25	28	31	34	37	40	43	46	49	52	55	58	59	62	65	68	
		71	74	77	80	83	86	85	88	91	94	1														
6	3	1	4	7	10	13	16	19	22	25	28	31	34	37	40	43	46	49	52	55	58	61	64	67	70	

Figure 29. Group D Sample Problems Program Results (Sheet 7 of 13)

```
                73  76  79  82  85  88  91  94   1
 6   4           1   4   7  10  13  16  19  22  25  28  31  34  37  40  43  46  49  52  55  58  61  64  67  70
                73  76  79  82  85  88  91  94   1
 6   5           1   4   7  10  13  16  19  22  25  28  31  34  37  40  43  46  49  52  55  58  61  64  67  70
                73  76  79  82  85  88  91  94   1
 6   6           1   4   7  10  13  16  19  20  23  26  29  32  35  38  37  40  43  46  49  52  55  58  61  64
                67  70  73  76  79  82  85  88  91  94   1
 6   7           1   4   7  10  13  14  17  20  23  26  29  32  35  38  41  44  43  46  49  52  55  58  61  64
                67  70  73  76  79  82  85  88  91  94   1
 7   1           1   4   7  10  13  16  19  22  25  28  31  34  37  40  43  46  49  52  53  56  59  62  61  64
                67  70  73  76  79  82  85  88  91  94   1
 7   2           1   4   7  10  13  16  19  22  25  28  31  34  37  40  43  46  49  52  53  56  59  62  61  64
                67  70  73  76  79  82  85  88  91  94   1
 7   3           1   4   7  10  13  16  19  22  25  28  31  34  37  40  43  46  49  52  53  56  59  58  61  64
                67  70  73  76  79  82  85  88  91  94   1
 7   4           1   4   7  10  13  16  19  22  25  28  31  34  37  40  43  46  49  52  55  58  61  64  67  70
                73  76  79  82  85  88  91  94   1
 7   5           1   4   7  10  13  16  19  22  25  28  31  34  37  40  43  46  49  52  55  58  61  64  67  70
                73  76  79  82  85  88  91  94   1
 7   6           1   4   7  10  13  16  19  22  25  28  31  34  37  40  43  46  49  52  55  58  61  64  67  70
                73  76  79  82  85  88  91  94   1
 7   7           1   4   7  10  13  16  19  22  25  28  31  34  37  40  43  46  49  52  55  58  61  64  67  70
                73  76  79  82  85  88  91  94   1

THE FORM FACTOR FROM SURFACE *3DISKC9TDSKC* TO SURFACE *6CYLTR       * = 0.18946

THE EXCHANGE COEFFICIENT (FA)=   0.37849E 02 SQ UNITS

                    THE MAPPING AREA = 0.1894044E 03 SQ UNITS

THE AREA OF SURFACE *3DISKC9TDSKC* = 0.1997725E 03 SQ UNITS.

THE AREA OF SURFACE *6CYLTR       * = 0.1892992E 03 SQ UNITS.

THE FORM FACTOR FROM SURFACE *6CYLTR       * TO SURFACE *3DISKC9TDSKC* = 0.19994

WARNING-WARNING
THE MAPPING AREA IS MORE THAN 1 PERCENT DIFFERENT FROM THE AREA IN SURFACE *3DISKC6CYLTR* SEEN BY
SURFACE *9TDSKC       *. THIS MAY BE CAUSED BY WRONG SURFACE DATA ENTRY (THE SURFACE BOUNDARY
CROSSES A MAPPING LINE IN MORE THAN TWO PLACES), OR TOO COARSE INCREMENTS.  THE FACTOR MAY BE INCORRECT.

THE FOLLOWING ARE THE (FINAL) SURFACE COORDINATES USED FOR THE FACTOR COMPUTATION-
```

Figure 29. Group D Sample Problems Program Results (Sheet 8 of 13)

***** DATA NAME- *3DISKC9TDSKC*

POINT	X	Y	Z	POINT	X	Y	Z
	0.0000000E-38	-0.0000000E-38	0.1000000E 01	---(INTERNALLY GENERATED ORIENTATION VECTOR)			
1	-0.0000000E-38	-0.0000000E-38	-0.0000000E-38	2	0.1568274E 01	-0.0000000E-38	-0.0000000E-38
3	0.3106414E 01	0.3059554E 00	0.0000000E-38	4	0.4555311E 01	0.9061079E 00	0.0000000E-38
5	0.5859283E 01	0.1777395E 01	0.0000000E-38	6	0.6968221E 01	0.2886332E 01	0.0000000E-38
7	0.7839507E 01	0.4190305E 01	0.0000000E-38	8	0.8439660E 01	0.5639201E 01	0.0000000E-38
9	0.8745610E 01	0.7177297E 01	0.0000000E-38	10	0.8745615E 01	0.8745616E 01	0.0000000E-38
11	0.8439660E 01	0.1028376E 02	0.0000000E-38	12	0.7839507E 01	0.1173265E 02	0.0000000E-38
13	0.6968221E 01	0.1303663E 02	0.0000000E-38	14	0.5859283E 01	0.1414556E 02	0.0000000E-38
15	0.4555311E 01	0.1501685E 02	0.0000000E-38	16	0.3106415E 01	0.1561700E 02	0.0000000E-38
17	0.1568274E 01	0.1592296E 02	0.0000000E-38	18	0.0000000E-38	0.1592296E 02	0.0000000E-38
19	-0.1538140E 01	0.1561700E 02	0.0000000E-38	20	-0.2987037E 01	0.1501685E 02	0.0000000E-38
21	-0.4291009E 01	0.1414556E 02	0.0000000E-38	22	-0.5399946E 01	0.1303663E 02	0.0000000E-38
23	-0.6271233E 01	0.1173265E 02	0.0000000E-38	24	-0.6871385E 01	0.1028376E 02	0.0000000E-38
25	-0.7177345E 01	0.8745571E 01	0.0000000E-38	26	-0.7177341E 01	0.7177342E 01	0.0000000E-38
27	-0.6871385E 01	0.5639201E 01	0.0000000E-38	28	-0.6271233E 01	0.4190304E 01	0.0000000E-38
29	-0.5399946E 01	0.2886332E 01	0.0000000E-38	30	-0.4291009E 01	0.1777394E 01	0.0000000E-38
31	-0.2987037E 01	0.9061079E 00	0.0000000E-38	32	-0.1538140E 01	0.3059552E 00	0.0000000E-38

***** DATA NAME- *6CYLTR *

POINT	X	Y	Z	POINT	X	Y	Z
1	0.8199948E 00	0.8325548E 01	0.1366032E 01	2	0.5259365E 00	0.5339927E 01	0.6562146E 01
3	0.5486767E 00	0.5570814E 01	0.1016023E 02	4	0.1407341E 01	0.8317862E 01	0.1394854E 01
5	0.1113232E 01	0.5332241E 01	0.6520968E 01	6	0.7444587E 00	0.5568252E 01	0.1016983E 02
7	0.1981901E 01	0.8409833E 01	0.1480215E 01	8	0.1687843E 01	0.5424212E 01	0.6676329E 01
9	0.9359789E 00	0.5598909E 01	0.1019829E 02	10	0.2521597E 01	0.8597925E 01	0.1618833E 01
11	0.2227538E 01	0.5612304E 01	0.6814947E 01	12	0.1115877E 01	0.5661607E 01	0.1024449E 02
13	0.3005687E 01	0.8674912E 01	0.1805381E 01	14	0.2711629E 01	0.5889291E 01	0.7001495E 01
15	0.1277241E 01	0.5753936E 01	0.1030667E 02	16	0.3415568E 01	0.9230147E 01	0.2032691E 01
17	0.3121510E 01	0.6244526E 01	0.7228805E 01	18	0.1413868E 01	0.5872347E 01	0.1038244E 02
19	0.3735489E 01	0.9649981E 01	0.2292027E 01	20	0.3441431E 01	0.6664360E 01	0.7488141E 01
21	0.1520503E 01	0.6012292E 01	0.1046889E 02	22	0.3953156E 01	0.1011828E 02	0.2573423E 01
23	0.3659098E 01	0.7132658E 01	0.7769537E 01	24	0.1593064E 01	0.6168391E 01	0.1056269E 02
25	0.4060203E 01	0.1061704E 02	0.2866065E 01	26	0.3766145E 01	0.7631423E 01	0.8062179E 01
27	0.1628746E 01	0.6334646E 01	0.1066024E 02	28	0.4052517E 01	0.1112711E 02	0.3158707E 01
29	0.3758459E 01	0.8141488E 01	0.8354821E 01	30	0.1626184E 01	0.6504668E 01	0.1075778E 02

Figure 29. Group D Sample Problems Program Results (Sheet 9 of 13)

31	0.3930393E 01	0.1162887E 02	0.3440103E 01	32	0.3636335E 01	0.8643252E 01	0.8636217E 01
33	0.1585476E 01	0.6671923E 01	0.1085158E 02	34	0.3698525E 01	0.1210305E 02	0.3699439E 01
35	0.3404466E 01	0.9117432E 01	0.8895553E 01	36	0.1508187E 01	0.6829983E 01	0.1093803E 02
37	0.3365822E 01	0.1253143E 02	0.3926749E 01	38	0.3071764E 01	0.9545806E 01	0.9122863E 01
39	0.1397266E 01	0.6972774E 01	0.1101380E 02	40	0.2945071E 01	0.1289753E 02	0.4113298E 01
41	0.2651013E 01	0.9911911E 01	0.9309412E 01	42	0.1257035E 01	0.7094809E 01	0.1107598E 02
43	0.2452441E 01	0.1313730E 02	0.4251916E 01	44	0.2158382E 01	0.1020168E 02	0.9448030E 01
45	0.1092825E 01	0.7191398E 01	0.1112219E 02	46	0.1906862E 01	0.1338959E 02	0.4337276E 01
47	0.1612804E 01	0.1040397E 02	0.9533390E 01	48	0.9109659E 00	0.7258830E 01	0.1115064E 02
49	0.1329303E 01	0.1349664E 02	0.4366099E 01	50	0.1035245E 01	0.1051102E 02	0.9562213E 01
51	0.7184461E 00	0.7294512E 01	0.1116025E 02	52	0.7419570E 00	0.1350433E 02	0.4337276E 01
53	0.4478987E 00	0.1051871E 02	0.9533390E 01	54	0.5226641E 00	0.7297074E 01	0.1115064E 02
55	0.1673963E 00	0.1341236E 02	0.4251916E 01	56	-0.1266619E 00	0.1042674E 02	0.9448030E 01
57	0.3311439E 00	0.7266418E 01	0.1112219E 02	58	-0.3722991E 00	0.1322426E 02	0.4113298E 01
59	-0.6663574E 00	0.1023864E 02	0.9309412E 01	60	0.1512454E 00	0.7203720E 01	0.1107598E 02
61	-0.8563892E 00	0.1294728E 02	0.3926749E 01	62	-0.1150447E 01	0.9961657E 01	0.9122863E 01
63	-0.1011793E-01	0.7111391E 01	0.1101380E 02	64	-0.1266271E 01	0.1259204E 02	0.3699439E 01
65	-0.1560329E 01	0.9606421E 01	0.8895553E 01	66	-0.1467450E 00	0.6992979E 01	0.1093803E 02
67	-0.1586192E 01	0.1217221E 02	0.3440103E 01	68	-0.1880250E 01	0.9186588E 01	0.8636217E 01
69	-0.2533854E 00	0.6853035E 01	0.1085158E 02	70	-0.1803858E 01	0.1170391E 02	0.3158707E 01
71	-0.2097917E 01	0.8718290E 01	0.8354821E 01	72	-0.3259409E 00	0.6696936E 01	0.1075778E 02
73	-0.1910905E 01	0.1120515E 02	0.2866065E 01	74	-0.2204964E 01	0.8219525E 01	0.8062179E 01
75	-0.3616233E 00	0.6530681E 01	0.1066024E 02	76	-0.1903219E 01	0.1069508E 02	0.2573423E 01
77	-0.2197278E 01	0.7709460E 01	0.7769537E 01	78	-0.3590613E 00	0.6360659E 01	0.1056269E 02
79	-0.1781095E 01	0.1019332E 02	0.2292027E 01	80	-0.2075154E 01	0.7207696E 01	0.7488141E 01
81	-0.3183533E 00	0.6193404E 01	0.1046889E 02	82	-0.1549227E 01	0.9719137E 01	0.2032691E 01
83	-0.1843285E 01	0.6733516E 01	0.7228805E 01	84	-0.2410638E 00	0.6035344E 01	0.1038244E 02
85	-0.1216524E 01	0.9290763E 01	0.1805381E 01	86	-0.1510583E 01	0.6305142E 01	0.7001495E 01
87	-0.1301630E 00	0.5892553E 01	0.1030667E 02	88	-0.7957733E 00	0.8924658E 01	0.1618833E 01
89	-0.1089832E 01	0.5939037E 01	0.6814947E 01	90	0.1008738E-01	0.5770518E 01	0.1024449E 02
91	-0.3031429E 00	0.8634890E 01	0.1480215E 01	92	-0.5972012E 00	0.5649269E 01	0.6676329E 01
93	0.1742975E 00	0.5673928E 01	0.1019829E 02	94	0.2424352E 00	0.8432596E 01	0.1394854E 01
95	-0.5162308E-01	0.5446975E 01	0.6590968E 01	96	0.3561569E 00	0.5606497E 01	0.1016983E 02

POINT	CONNECTING POINTS	POINT	CONNECTING POINTS	POINT	CONNECTING POINTS	POINT	CONNECTING POINTS
1	4, 2, 94, 0	2	5, 3, 95, 1	3	6, 0, 96, 2	4	7, 5, 1, 0
5	8, 6, 2, 4	6	9, 0, 3, 5	7	10, 8, 4, 0	8	11, 9, 5, 7
9	12, 0, 6, 8	10	13, 11, 7, 0	11	14, 12, 8, 10	12	15, 0, 9, 11
13	16, 14, 10, 0	14	17, 15, 11, 13	15	18, 0, 12, 14	16	19, 17, 13, 0
17	20, 18, 14, 16	18	21, 0, 15, 17	19	22, 20, 16, 0	20	23, 21, 17, 19
21	24, 0, 18, 20	22	25, 23, 19, 0	23	26, 24, 20, 22	24	27, 0, 21, 23
25	28, 26, 22, 0	26	29, 27, 23, 25	27	30, 0, 24, 26	28	31, 29, 25, 0

Figure 29. Group D Sample Problems Program Results (Sheet 10 of 13)

```
29    32, 30, 26, 28    30    33,  0, 27, 29    31    34, 32, 28,  0    32    35, 33, 29, 31
33    36,  0, 30, 32    34    37, 35, 31,  0    35    38, 36, 32, 34    36    39,  0, 33, 35
37    40, 38, 34,  0    38    41, 39, 35, 37    39    42,  0, 36, 38    40    43, 41, 37,  0
41    44, 42, 38, 40    42    45,  0, 39, 41    43    46, 44, 40,  0    44    47, 45, 41, 43
45    48,  0, 42, 44    46    49, 47, 43,  0    47    50, 48, 44, 46    48    51,  0, 45, 47
49    52, 50, 46,  0    50    53, 51, 47, 49    51    54,  0, 48, 50    52    55, 53, 49,  0
53    56, 54, 50, 52    54    57,  0, 51, 53    55    58, 56, 52,  0    56    59, 57, 53, 55
57    60,  0, 54, 56    58    61, 59, 55,  0    59    62, 60, 56, 58    60    63,  0, 57, 59
61    64, 62, 58,  0    62    65, 63, 59, 61    63    66,  0, 60, 62    64    67, 65, 61,  0
65    68, 66, 62, 64    66    69,  0, 63, 65    67    70, 68, 64,  0    68    71, 69, 65, 67
69    72,  0, 66, 68    70    73, 71, 67,  0    71    74, 72, 68, 70    72    75,  0, 69, 71
73    76, 74, 70,  0    74    77, 75, 71, 73    75    78,  0, 72, 74    76    79, 77, 73,  0
77    80, 78, 74, 76    78    81,  0, 75, 77    79    82, 80, 76,  0    80    83, 81, 77, 79
81    84,  0, 78, 80    82    85, 83, 79,  0    83    86, 84, 80, 82    84    87,  0, 81, 83
85    88, 86, 82,  0    86    89, 87, 83, 85    87    90,  0, 84, 86    88    91, 89, 85,  0
89    92, 90, 86, 88    90    93,  0, 87, 89    91    94, 92, 88,  0    92    95, 93, 89, 91
93    96,  0, 90, 92    94     1, 95, 91,  0    95     2, 96, 92, 94    96     3,  0, 93, 95

COORDINATES OF POINTS ON BOUNDARY OF SURF    *3DISKC9TDSKC* FOR EACH Y INTERVAL

      X-LEFT          X-RIGHT          Y                      X-LEFT          X-RIGHT          Y

 -0.0000000E-38  0.1568274E 01 -0.0000000E-38          -0.5167441E 01  0.6735715E 01  0.2653826E 01
 -0.6734053E 01  0.8302328E 01  0.5307653E 01          -0.7177343E 01  0.8745613E 01  0.7961479E 01
 -0.6734054E 01  0.8302328E 01  0.1061530E 02          -0.5167441E 01  0.6735715E 01  0.1326913E 02
  0.0000000E-38  0.1568274E 01  0.1592296E 02

NO. OF HORIZONTAL INCREMENTS=  6  NO. OF VERTICAL INCREMENTS=  6

THE FOLLOWING ARE PLANE POINT CONFIGURATION FACTORS COMPUTED FOR THIS RUN
LOWEST GRID LINE FIRST, FROM X-LEFT TO X-RIGHT.

 0.7089329E-01   0.7123186E-01   0.7153845E-01   0.7168753E-01   0.7167785E-01   0.7150959E-01
 0.7118435E-01
 0.7330739E-01   0.9580901E-01   0.1160715E 00   0.1247633E 00   0.1170099E 00   0.9716407E-01
 0.7425752E-01
 0.7488478E-01   0.1211815E 00   0.1816448E 00   0.2177064E 00   0.1844453E 00   0.1226296E 00
 0.7561007E-01
 0.7790009E-01   0.1438289E 00   0.2610137E 00   0.3633967E 00   0.2776152E 00   0.1528917E 00
 0.8151928E-01
```

Figure 29. Group D Sample Problems Program Results (Sheet 11 of 13)

0.8439140E-01	0.1556328E 00	0.3057497E 00	0.5323037E 00	0.3692079E 00	0.1679986E 00
0.8973245E-01					
0.9451819E-01	0.1430076E 00	0.2374703E 00	0.3190755E 00	0.2706815E 00	0.1554584E 00
0.9966548E-01					
0.1122916E 00	0.1140694E 00	0.1155317E 00	0.1166525E 00	0.1171807E 00	0.1169968E 00
0.1161087E 00					

Figure 29. Group D Sample Problems Program Results (Sheet 12 of 13)

```
NAA CONFAC II REPORT SAMPLE PROBLEMS GROUP D   K.A.TOUPS,7/31/65

RUN NO.   2   DATA USED FOR THIS RUN- *3DISKC*3DISKB*
                                      *9TDSKC*      *
                                      *N    1*     1*

THE FORM FACTOR FROM SURFACE *3DISKC9TDSKC* TO SURFACE *3DISKB      * = 0.09955

THE EXCHANGE COEFFICIENT (FA)=   0.19888E 02 SQ UNITS

                THE MAPPING AREA = 0.1230458E 03 SQ UNITS


ONLY A PART OF SURFACE *3DISKC9TDSKC* SEES SURFACE *3DISKB      *
THE AREA OF THAT PART IS  0.1314548E 03 SQ UNITS.
THE AREA OF THE TOTAL SURFACE IS  0.1997725E 03 SQ UNITS.

THE AREA OF SURFACE *3DISKB      * = 0.2809301E 02 SQ UNITS.

THE FORM FACTOR FROM SURFACE *3DISKB      * TO SURFACE *3DISKC9TDSKC* = 0.70792

WARNING-WARNING
THE MAPPING AREA IS MORE THAN 1 PERCENT DIFFERENT FROM THE AREA IN SURFACE *3DISKC3DISKB* SEEN BY
SURFACE *9TDSKC      *. THIS MAY BE CAUSED BY WRONG SURFACE DATA ENTRY (THE SURFACE BOUNDARY
CROSSES A MAPPING LINE IN MORE THAN TWO PLACES), OR TOO COARSE INCREMENTS.  THE FACTOR MAY BE INCORRECT.
```

Figure 29. Group D Sample Problems Program Results (Sheet 13 of 13)

SAMPLE PROBLEM GROUP E

The capability of obtaining form factors to spheres in any position relative to surface 1 is demonstrated in Figure 30. Closed form configuration factor solutions are utilized, permitting very rapid computations. The data sheets are presented in Figure 31 and the results in Figure 32. The use of the comments card is demonstrated.

Problem 1E

The factor from a rectangle, 1PLAT8, to a sphere, 7SPH1, fully above the plane of 1PLAT8 (Case I) is requested as Run #1. The configuration factor solution in this case is extremely simple (see Appendix E), which, in addition to the course mapping of 1PLAT8, accounts for the short computational time.

Problem 2E

The factor from 1PLAT8 to 7SPH2 is requested. The sphere is the same size as 7SPH1, except part of the lower half of the sphere is below, and outside of, the surface of 1PLAT8 (Case II). The results are shown as Run #2.

Problem 3E

A larger sphere, 7SPH3, is located with part of the upper half of the sphere below the surface of 1PLAT8 (Case III). The results are shown as Run #3.

Problem 4E

The program will also compute the factor to a sphere which is embedded in surface 1, illustrated by 7SPH2 and 1PLAT7. However, no attempt is made to determine what part of 1PLAT7 sees the sphere; when a mapping point on surface 1 appears inside the sphere, a configuration factor of zero is returned and integrated along with the other computed factors. Therefore, in Run #4 we see no indication that 1 PLAT7 is bisected by 7SPH2, although in reality it is. The problem is handled in this way because of the extreme complexity of the general determination of that part of surface 1 not seen by the sphere.

Problem 5E

The trivial case of the sphere completely below surface 1 is illustrated by Run #5.

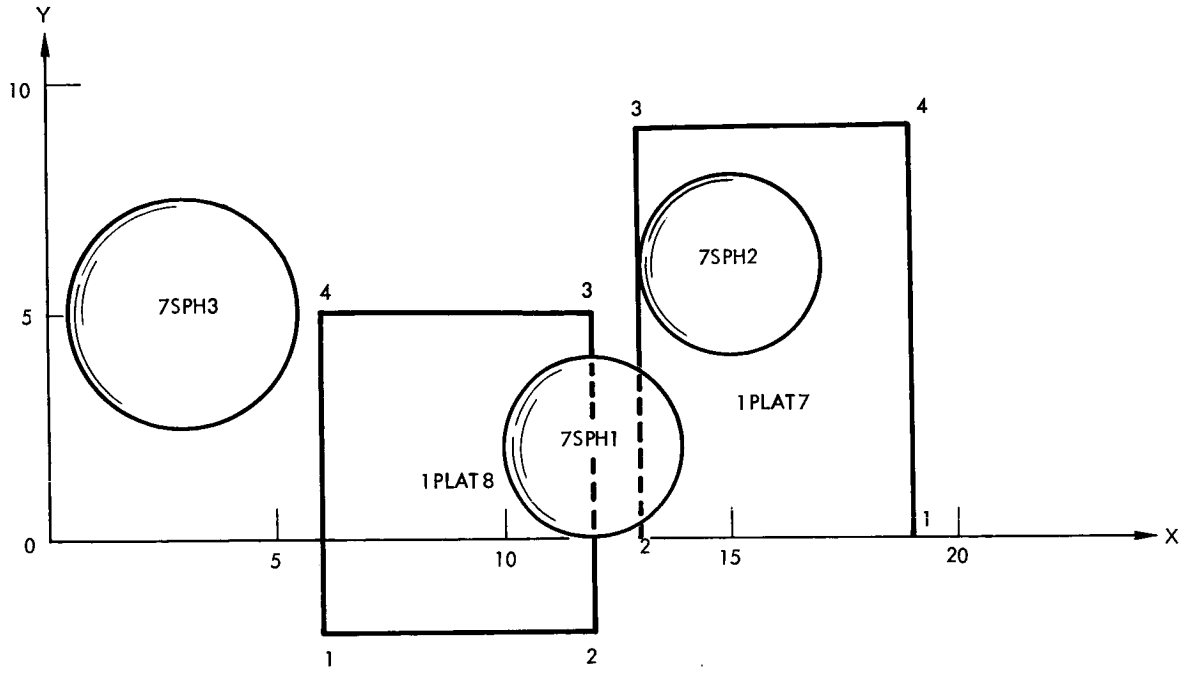

TOP VIEW

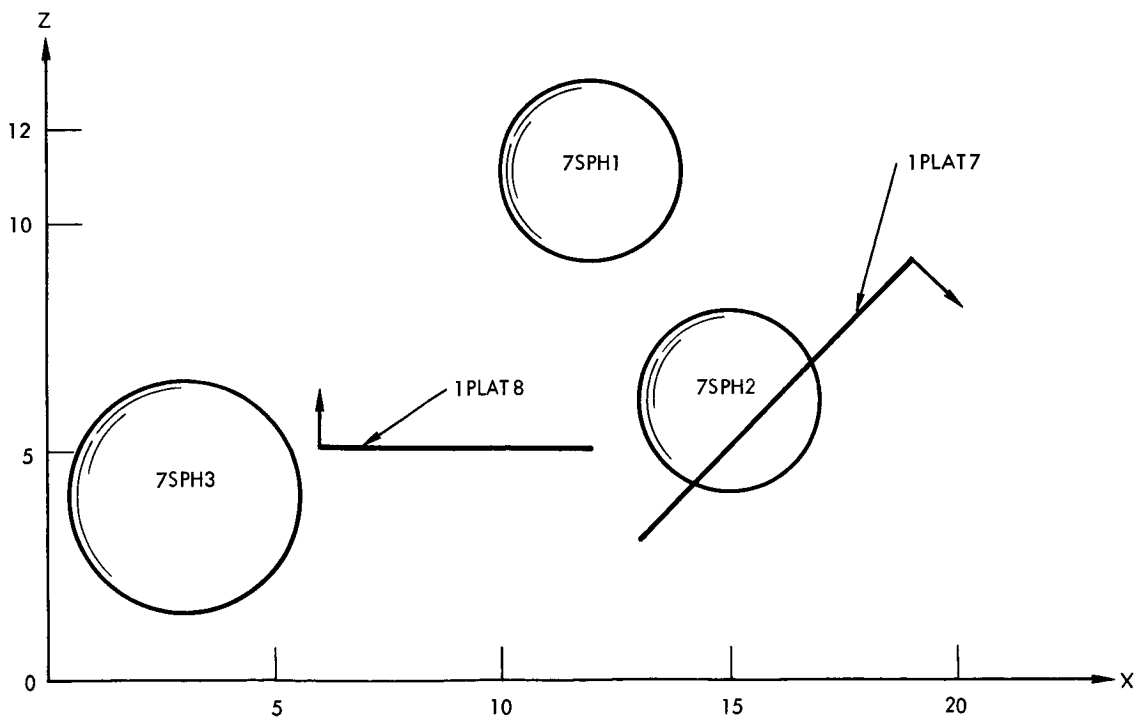

SIDE VIEW

Figure 30. Group E Sample Problems Geometry

FORTRAN FIXED 10 DIGIT DECIMAL DATA

DECK NO. GROUP E PROGRAMMER K. A. TOUPS DATE 7/31/65 PAGE 15 of 28 JOB NO. 2699-40

NUMBER	IDENTIFICATION	DESCRIPTION DO NOT KEY PUNCH
TNAA CΦNFAC		
II REPΦRT $A		
MPLE PRΦBLEM		
$ GRΦUP E		
K.A.TΦUP$,7/	73 80	
31/65	501	
1PLAT7		
$KEWED RECTA		
NGULAR PLATE		
IN 1ST QUAD		
RANT	73 80	
	502	
$DC=4,19,0		
,9,13,0,3,13		
,9,3,19,9,9$		
	73 80	
	503	
1PLAT8		
RECTANGULAR		
PLATE PARALL		
EL TΦ XY PLA		
NE	73 80	
	504	

Figure 31. Group E Sample Problems Input Data Code Sheets (Sheet 1 of 6)

NORTH AMERICAN AVIATION, INC.

SPACE and INFORMATION SYSTEMS DIVISION

FORTRAN FIXED 10 DIGIT DECIMAL DATA

DECK NO. GROUP E PROGRAMMER K.A. TOUPS DATE 7/31/65 PAGE 16 of 28 JOB NO. 2699-40

	NUMBER	IDENTIFICATION	DESCRIPTION DO NOT KEY PUNCH
1	$DC=4,6,-2		
13	,5,12,-2,5,1		
25	2,5,5,6,5,5$		
37			
49		73 80	
61		505	
1	7$PHI		
13			
25	FULLY $EEN B		
37	Y 1PLAT8,NΦT		
49	$EEN BY 1PL	73 80	
61	AT7(CA$E 1)	506	
1	2.0		RADIUS
13	12.0		
25	2.0		LOCATION OF CENTER
37	11.0		
49		73 80	
61		507	
1	7$PH2		
13			
25	PARTLY $EEN		
37	BY 1PLAT7 AN		
49	D 1PLAT8(CA$	73 80	
61	E 11)	508	

Figure 31. Group E Sample Problems Input Data Code Sheets (Sheet 2 of 6)

NORTH AMERICAN AVIATION, INC.
SPACE and INFORMATION SYSTEMS DIVISION

FORTRAN FIXED 10 DIGIT DECIMAL DATA

DECK NO. GROUP E PROGRAMMER K. A. TOUPS DATE 7/31/65 PAGE 17 of 28 JOB NO. 2699-40

	NUMBER	IDENTIFICATION	DESCRIPTION DO NOT KEY PUNCH
1	2 . 0		
13	1 5 . 0		
25	6 . 0		
37	6 . 0		
49		73 80	
61		5 0 9	
1	7 $ P H 3		
13			
25	P A R T L Y $ E E N		
37	B Y 1 P L A T 8		
49		73 80	
61		5 1 0	
1	2 . 5		
13	3 . 0		
25	5 . 0		
37	4 . 0		
49		73 80	
61		5 1 1	
1	C F A C T Φ R T Φ $		
13	P H E R E (C A $ E 1		
25	)		
37			
49		73 80	
61		5 1 2	

Figure 31. Group E Sample Problems Input Data Code Sheets (Sheet 3 of 6)

NORTH AMERICAN AVIATION, INC.

SPACE and INFORMATION SYSTEMS DIVISION

FORTRAN FIXED 10 DIGIT DECIMAL DATA

DECK NO. GROUP E PROGRAMMER K.A. TOUPS DATE 7/31/65 PAGE 18 of 28 JOB NO. 2699-40

	NUMBER	IDENTIFICATION	DESCRIPTION DO NOT KEY PUNCH
1	1 P L A T 8 7 $ P H 1		PROBLEM 1E
13			
25	D 1 1		
37			
49		73 80	
61		5 1 3	
1	C F A C T Φ R T Φ $		
13	P H E R E (C A $ E 1		
25	1)		
37			
49		73 80	
61		5 1 4	
1	1 P L A T 8 7 $ P H 2		PROBLEM 2E
13			
25			
37			
49		73 80	
61		5 1 5	
1	C F A C T Φ R T Φ $		
13	P H E R E (C A $ E 1		
25	1 1)		
37			
49		73 80	
61		5 1 6	

Figure 31. Group E Sample Problems Input Data Code Sheets (Sheet 4 of 6)

NORTH AMERICAN AVIATION, INC.
SPACE and INFORMATION SYSTEMS DIVISION

FORTRAN FIXED 10 DIGIT DECIMAL DATA

DECK NO. GROUP E PROGRAMMER K.A. TOUPS DATE 7/31/65 PAGE 19 of 28 JOB NO. 2699-40

NUMBER	IDENTIFICATION	DESCRIPTION DO NOT KEY PUNCH
1 PLAT87$PH3	73 80 517	PROBLEM 3E
CCA$E III WI TH $PHERE EM BEDDED IN 1P LAT7	73 80 518	
1 PLAT77$PH2 3 3	73 80 519	PROBLEM 4E
C	73 80 520	THIS CARD REMOVES COMMENTS (PRINTS BLANKS) IN TITLE PRINTOUT.

Figure 31. Group E Sample Problems Input Data Code Sheets (Sheet 5 of 6)

NORTH AMERICAN AVIATION, INC.

SPACE and INFORMATION SYSTEMS DIVISION

FORTRAN FIXED 10 DIGIT DECIMAL DATA

DECK NO. GROUP E PROGRAMMER K. A. TOUPS DATE 7/31/65 PAGE 20 of 28 JOB NO. 2699-40

	NUMBER	IDENTIFICATION	DESCRIPTION DO NOT KEY PUNCH
1	1 P L A T 7 7 $ P H 1		PROBLEM 5E
13			
25			
37			
49		73 80	
61		5 2 1	
1			
13			
25			
37			
49		73 80	
61			
1			
13			
25			
37			
49		73 80	
61			
1			
13			
25			
37			
49		73 80	
61			

Figure 31. Group E Sample Problems Input Data Code Sheets (Sheet 6 of 6)

NORTH AMERICAN AVIATION, INC.

SPACE and INFORMATION SYSTEMS DIVISION

```
                    NAA SPACE AND INFORMATION SYSTEMS DIVISION
                RADIANT-INTERCHANGE CONFIGURATION FACTOR PROGRAM

                                C O N F A C   I I

          NAA CONFAC II REPORT SAMPLE PROBLEMS GROUP E   K.A.TOUPS,7/31/65

                                I N P U T   D A T A


***** DATA NAME- *1PLAT7       * SKEWED RECTANGULAR PLATE IN 1ST QUADRANT

POINT        X              Y              Z            POINT        X              Y              Z
       0.1970711E 02 -0.0000000E-38  0.8292893E 01---(INTERNALLY GENERATED ORIENTATION VECTOR)
   1   0.1900000E 02  0.0000000E-38  0.9000000E 01        2   0.1300000E 02  0.0000000E-38  0.3000000E 01
   3   0.1300000E 02  0.9000000E 01  0.3000000E 01        4   0.1900000E 02  0.9000000E 01  0.9000000E 01


***** DATA NAME- *1PLAT8       * RECTANGULAR PLATE PARALLEL TO XY PLANE

POINT        X              Y              Z            POINT        X              Y              Z
       0.6000000E 01 -0.2000000E 01  0.6000000E 01---(INTERNALLY GENERATED ORIENTATION VECTOR)
   1   0.6000000E 01 -0.2000000E 01  0.5000000E 01        2   0.1200000E 02 -0.2000000E 01  0.5000000E 01
   3   0.1200000E 02  0.5000000E 01  0.5000000E 01        4   0.6000000E 01  0.5000000E 01  0.5000000E 01


***** DATA NAME- *7SPH1        *              FULLY SEEN BY 1PLAT8,NOT SEEN BY 1PLAT7(CASE I)

SPHERE SPECIFICATIONS-

RADIUS = 0.2000000E 01
COORDINATES OF CENTER---- X = 0.1200000E 02     Y = 0.2000000E 01     Z = 0.1100000E 02


***** DATA NAME- *7SPH2        *              PARTLY SEEN BY 1PLAT7 AND 1PLAT8(CASE II)

SPHERE SPECIFICATIONS-
```

Figure 32. Group E Sample Problems Program Results (Sheet 1 of 13)

```
RADIUS = 0.2000000E 01
COORDINATES OF CENTER---- X = 0.1500000E 02     Y = 0.6000000E 01     Z = 0.6000000E 01


***** DATA NAME- *7SPH3        *              PARTLY SEEN BY 1PLAT8

SPHERE SPECIFICATIONS-

RADIUS = 0.2500000E 01
COORDINATES OF CENTER---- X = 0.3000000E 01     Y = 0.5000000E 01     Z = 0.4000000E 01
```

Figure 32. Group E Sample Problems Program Results (Sheet 2 of 13)

```
                    NAA CONFAC II REPORT SAMPLE PROBLEMS GROUP E   K.A.TOUPS,7/31/65
                    FACTOR TO SPHERE(CASE I)

RUN NO.   1   DATA USED FOR THIS RUN- *1PLAT8*7SPH1 *
                                      *      *      *
                                      *D    1*     1*

THE FORM FACTOR FROM SURFACE *1PLAT8      * TO SURFACE *7SPH1       * = 0.06859

THE EXCHANGE COEFFICIENT (FA)=   0.28807E 01 SQ UNITS

                  THE MAPPING AREA = 0.4200000E 02 SQ UNITS

THE AREA OF SURFACE *1PLAT8      * = 0.4200000E 02 SQ UNITS.

THE AREA OF SURFACE *7SPH1       * = 0.5026548E 02 SQ UNITS.

THE FORM FACTOR FROM SURFACE *7SPH1       * TO SURFACE *1PLAT8      * = 0.05731

THE FOLLOWING ARE THE (FINAL) SURFACE COORDINATES USED FOR THE FACTOR COMPUTATION-


***** DATA NAME- *1PLAT8      *

POINT       X              Y              Z            POINT       X              Y              Z
       0.0000000E-38 -0.0000000E-38  0.1000000E 01---(INTERNALLY GENERATED ORIENTATION VECTOR)
   1   0.0000000E-38 -0.0000000E-38  0.0000000E-38       2   0.6000000E 01 -0.0000000E-38  0.0000000E-38
   3   0.6000000E 01  0.7000000E 01  0.0000000E-38       4   0.0000000E-38  0.7000000E 01  0.0000000E-38


***** DATA NAME- *7SPH1       *

POINT       X              Y              Z            POINT       X              Y              Z
   1   0.6000000E 01  0.4000000E 01  0.6000000E 01

COORDINATES OF POINTS ON BOUNDARY OF SURF    *1PLAT8      * FOR EACH Y INTERVAL

      X-LEFT          X-RIGHT          Y                      X-LEFT          X-RIGHT          Y
```

Figure 32. Group E Sample Problems Program Results (Sheet 3 of 13)

```
0.0000000E-38  0.6000000E 01 -0.0000000E-38          0.0000000E-38  0.6000000E 01  0.1166667E 01
0.0000000E-38  0.6000000E 01  0.2333333E 01          0.0000000E-38  0.6000000E 01  0.3500000E 01
0.0000000E-38  0.6000000E 01  0.4666667E 01          0.0000000E-38  0.6000000E 01  0.5833333E 01
0.0000000E-38  0.6000000E 01  0.7000000E 01

NO. OF HORIZONTAL INCREMENTS=  6  NO. OF VERTICAL INCREMENTS=  6

THE FOLLOWING ARE PLANE POINT CONFIGURATION FACTORS COMPUTED FOR THIS RUN
LOWEST GRID LINE FIRST, FROM X-LEFT TO X-RIGHT.

0.2907283E-01  0.3552018E-01  0.4280040E-01  0.5037517E-01  0.5727027E-01  0.6220101E-01
0.6400387E-01
0.3352356E-01  0.4184807E-01  0.5160394E-01  0.6215214E-01  0.7210618E-01  0.7943108E-01
0.8215256E-01
0.3711525E-01  0.4712020E-01  0.5919767E-01  0.7267287E-01  0.8577958E-01  0.9566442E-01
0.9938867E-01
0.3907999E-01  0.5006706E-01  0.6354506E-01  0.7884667E-01  0.9398584E-01  0.1055655E 00
0.1099637E 00
0.3892276E-01  0.4982959E-01  0.6319199E-01  0.7834117E-01  0.9330887E-01  0.1047442E 00
0.1090848E 00
0.3668515E-01  0.4648105E-01  0.5826450E-01  0.7136197E-01  0.8405444E-01  0.9359800E-01
0.9718746E-01
0.3292181E-01  0.4097927E-01  0.5037517E-01  0.6048123E-01  0.6997085E-01  0.7692624E-01
0.7950464E-01
```

Figure 32. Group E Sample Problems Program Results (Sheet 4 of 13)

```
                    NAA CONFAC II REPORT SAMPLE PROBLEMS GROUP E   K.A.TOUPS,7/31/65
                    FACTOR TO SPHERE(CASE II)

RUN NO.   2   DATA USED FOR THIS RUN- *1PLAT8*7SPH2 *
                                      *      *      *
                                      *      *      *

THE FORM FACTOR FROM SURFACE *1PLAT8      * TO SURFACE *7SPH2       * = 0.01426

THE EXCHANGE COEFFICIENT (FA)=   0.59895E 00 SQ UNITS

                  THE MAPPING AREA = 0.4200000E 02 SQ UNITS

THE AREA OF SURFACE *1PLAT8      * = 0.4200000E 02 SQ UNITS.


ONLY A PART OF SURFACE *7SPH2       * SEES SURFACE *1PLAT8      *
THE AREA OF THAT PART IS  0.3769911E 02 SQ UNITS.
THE AREA OF THE TOTAL SURFACE IS  0.5026548E 02 SQ UNITS.

THE FORM FACTOR FROM SURFACE *7SPH2       * TO SURFACE *1PLAT8      * = 0.01192


THE FOLLOWING ARE THE (FINAL) SURFACE COORDINATES USED FOR THE FACTOR COMPUTATION-


***** DATA NAME- *1PLAT8      *

POINT       X              Y              Z            POINT       X              Y              Z
       0.0000000E-38 -0.0000000E-38  0.1000000E 01---(INTERNALLY GENERATED ORIENTATION VECTOR)
   1   0.0000000E-38 -0.0000000E-38  0.0000000E-38       2   0.6000000E 01 -0.0000000E-38  0.0000000E-38
   3   0.6000000E 01  0.7000000E 01  0.0000000E-38       4   0.0000000E-38  0.7000000E 01  0.0000000E-38


***** DATA NAME- *7SPH2       *

POINT       X              Y              Z            POINT       X              Y              Z
   1   0.9000000E 01  0.8000000E 01  0.1000000E 01

COORDINATES OF POINTS ON BOUNDARY OF SURF    *1PLAT8      * FOR EACH Y INTERVAL
```

Figure 32. Group E Sample Problems Program Results (Sheet 5 of 13)

X-LEFT	X-RIGHT	Y
0.0000000E-38	0.6000000E 01	-0.0000000E-38
0.0000000E-38	0.6000000E 01	0.2333333E 01
0.0000000E-38	0.6000000E 01	0.4666667E 01
0.0000000E-38	0.6000000E 01	0.7000000E 01

X-LEFT	X-RIGHT	Y
0.0000000E-38	0.6000000E 01	0.1166667E 01
0.0000000E-38	0.6000000E 01	0.3500000E 01
0.0000000E-38	0.6000000E 01	0.5833333E 01

NO. OF HORIZONTAL INCREMENTS= 6 NO. OF VERTICAL INCREMENTS= 6

THE FOLLOWING ARE PLANE POINT CONFIGURATION FACTORS COMPUTED FOR THIS RUN
LOWEST GRID LINE FIRST, FROM X-LEFT TO X-RIGHT.

0.2456234E-02	0.2958069E-02	0.3561574E-02	0.4272044E-02	0.5080214E-02	0.5951806E-02
0.6817957E-02					
0.2968623E-02	0.3672577E-02	0.4561016E-02	0.5666166E-02	0.7002870E-02	0.8542515E-02
0.1017746E-01					
0.3556366E-02	0.4531646E-02	0.5831173E-02	0.7555848E-02	0.9806502E-02	0.1263230E-01
0.1592353E-01					
0.4193822E-02	0.5511498E-02	0.7372414E-02	0.1002924E-01	0.1382693E-01	0.1915587E-01
0.2622033E-01					
0.4827293E-02	0.6535652E-02	0.9091383E-02	0.1302961E-01	0.1926402E-01	0.2928969E-01
0.4516103E-01					
0.5374065E-02	0.7460953E-02	0.1074253E-01	0.1616383E-01	0.2564951E-01	0.4333516E-01
0.7829274E-01					
0.5737566E-02	0.8097710E-02	0.1193474E-01	0.1858892E-01	0.3112908E-01	0.5750824E-01
0.1219323E 00					

Figure 32. Group E Sample Problems Program Results (Sheet 6 of 13)

```
                    NAA CONFAC II REPORT SAMPLE PROBLEMS GROUP E   K.A.TOUPS,7/31/65
                    FACTOR TO SPHERE(CASE III)

RUN NO.   3   DATA USED FOR THIS RUN- *1PLAT8*7SPH3 *
                                      *      *      *
                                      *      *      *

THE FORM FACTOR FROM SURFACE *1PLAT8      * TO SURFACE *7SPH3       * = 0.00502

THE EXCHANGE COEFFICIENT (FA)=   0.21089E 00 SQ UNITS

                  THE MAPPING AREA = 0.4200000E 02 SQ UNITS

THE AREA OF SURFACE *1PLAT8      * = 0.4200000E 02 SQ UNITS.


ONLY A PART OF SURFACE *7SPH3       * SEES SURFACE *1PLAT8      *
THE AREA OF THAT PART IS  0.2356194E 02 SQ UNITS.
THE AREA OF THE TOTAL SURFACE IS  0.7853982E 02 SQ UNITS.

THE FORM FACTOR FROM SURFACE *7SPH3       * TO SURFACE *1PLAT8      * = 0.00269


THE FOLLOWING ARE THE (FINAL) SURFACE COORDINATES USED FOR THE FACTOR COMPUTATION-


***** DATA NAME- *1PLAT8      *

POINT       X              Y              Z            POINT       X              Y              Z
       0.0000000E-38 -0.0000000E-38  0.1000000E 01---(INTERNALLY GENERATED ORIENTATION VECTOR)
   1   0.0000000E-38 -0.0000000E-38  0.0000000E-38       2   0.6000000E 01 -0.0000000E-38  0.0000000E-38
   3   0.6000000E 01  0.7000000E 01  0.0000000E-38       4   0.0000000E-38  0.7000000E 01  0.0000000E-38


***** DATA NAME- *7SPH3       *

POINT       X              Y              Z            POINT       X              Y              Z
   1  -0.3000000E 01  0.7000000E 01 -0.1000000E 01

COORDINATES OF POINTS ON BOUNDARY OF SURF    *1PLAT8      * FOR EACH Y INTERVAL
```

Figure 32. Group E Sample Problems Program Results (Sheet 7 of 13)

X-LEFT	X-RIGHT	Y
0.0000000E-38	0.6000000E 01	-0.0000000E-38
0.0000000E-38	0.6000000E 01	0.2333333E 01
0.0000000E-38	0.6000000E 01	0.4666667E 01
0.0000000E-38	0.6000000E 01	0.7000000E 01

X-LEFT	X-RIGHT	Y
0.0000000E-38	0.6000000E 01	0.1166667E 01
0.0000000E-38	0.6000000E 01	0.3500000E 01
0.0000000E-38	0.6000000E 01	0.5833333E 01

NO. OF HORIZONTAL INCREMENTS= 6 NO. OF VERTICAL INCREMENTS= 6

THE FOLLOWING ARE PLANE POINT CONFIGURATION FACTORS COMPUTED FOR THIS RUN
LOWEST GRID LINE FIRST, FROM X-LEFT TO X-RIGHT.

0.2314547E-02	0.1940820E-02	0.1589488E-02	0.1284949E-02	0.1033531E-02	0.8316591E-03
0.6718795E-03					
0.3684484E-02	0.2911746E-02	0.2252466E-02	0.1730292E-02	0.1332027E-02	0.1033082E-02
0.8094302E-03					
0.6257714E-02	0.4520667E-02	0.3233145E-02	0.2328346E-02	0.1702147E-02	0.1267138E-02
0.9610639E-03					
0.1141010E-01	0.7178652E-02	0.4622138E-02	0.3080579E-02	0.2127336E-02	0.1517989E-02
0.1115077E-02					
0.2194707E-01	0.1123994E-01	0.6367542E-02	0.3907600E-02	0.2552998E-02	0.1752724E-02
0.1252204E-02					
0.4018944E-01	0.1599525E-01	0.8025660E-02	0.4600458E-02	0.2881810E-02	0.1924306E-02
0.1348594E-02					
0.5302282E-01	0.1838422E-01	0.8745352E-02	0.4878218E-02	0.3007411E-02	0.1987819E-02
0.1383508E-02					

Figure 32. Group E Sample Problems Program Results (Sheet 8 of 13)

```
                    NAA CONFAC II REPORT SAMPLE PROBLEMS GROUP E   K.A.TOUPS,7/31/65
                    CASE III WITH SPHERE EMBEDDED IN 1PLAT7

RUN NO.   4   DATA USED FOR THIS RUN- *1PLAT7*7SPH2 *
                                      *      *      *
                                      *     3*     3*

THE FORM FACTOR FROM SURFACE *1PLAT7      * TO SURFACE *7SPH2       * = 0.02446

THE EXCHANGE COEFFICIENT (FA)=   0.18682E 01 SQ UNITS

                  THE MAPPING AREA = 0.7636752E 02 SQ UNITS

THE AREA OF SURFACE *1PLAT7      * = 0.7636753E 02 SQ UNITS.


ONLY A PART OF SURFACE *7SPH2       * SEES SURFACE *1PLAT7      *
THE AREA OF THAT PART IS  0.1624699E 02 SQ UNITS.
THE AREA OF THE TOTAL SURFACE IS  0.5026548E 02 SQ UNITS.

THE FORM FACTOR FROM SURFACE *7SPH2       * TO SURFACE *1PLAT7      * = 0.03717


THE FOLLOWING ARE THE (FINAL) SURFACE COORDINATES USED FOR THE FACTOR COMPUTATION-


***** DATA NAME- *1PLAT7      *

POINT       X              Y              Z            POINT       X              Y              Z
       0.0000000E-38  0.0000000E-38  0.9999998E 00---(INTERNALLY GENERATED ORIENTATION VECTOR)
   1  -0.0000000E-38  0.0000000E-38  0.0000000E-38       2   0.8485281E 01  0.0000000E-38  0.0000000E-38
   3   0.8485281E 01  0.8999999E 01  0.0000000E-38       4  -0.0000000E-38  0.8999999E 01  0.0000000E-38


***** DATA NAME- *7SPH2       *

POINT       X              Y              Z            POINT       X              Y              Z
   1   0.4949747E 01  0.5999999E 01 -0.7071059E 00

COORDINATES OF POINTS ON BOUNDARY OF SURF    *1PLAT7      * FOR EACH Y INTERVAL
```

Figure 32. Group E Sample Problems Program Results (Sheet 9 of 13)

X-LEFT	X-RIGHT	Y	X-LEFT	X-RIGHT	Y
-0.0000000E-38	0.8485281E 01	0.0000000E-38	-0.0000000E-38	0.8485281E 01	0.4999999E 00
-0.0000000E-38	0.8485281E 01	0.9999999E 00	-0.0000000E-38	0.8485281E 01	0.1500000E 01
-0.0000000E-38	0.8485281E 01	0.2000000E 01	-0.0000000E-38	0.8485281E 01	0.2500000E 01
-0.0000000E-38	0.8485281E 01	0.3000000E 01	-0.0000000E-38	0.8485281E 01	0.3500000E 01
-0.0000000E-38	0.8485281E 01	0.4000000E 01	-0.0000000E-38	0.8485281E 01	0.4499999E 01
-0.0000000E-38	0.8485281E 01	0.4999999E 01	-0.0000000E-38	0.8485281E 01	0.5499999E 01
-0.0000000E-38	0.8485281E 01	0.5999999E 01	-0.0000000E-38	0.8485281E 01	0.6499999E 01
-0.0000000E-38	0.8485281E 01	0.6999999E 01	-0.0000000E-38	0.8485281E 01	0.7499999E 01
-0.0000000E-38	0.8485281E 01	0.7999999E 01	-0.0000000E-38	0.8485281E 01	0.8499999E 01
-0.0000000E-38	0.8485281E 01	0.8999999E 01			

NO. OF HORIZONTAL INCREMENTS= 18 NO. OF VERTICAL INCREMENTS= 18

THE FOLLOWING ARE PLANE POINT CONFIGURATION FACTORS COMPUTED FOR THIS RUN
LOWEST GRID LINE FIRST, FROM X-LEFT TO X-RIGHT.

0.1308357E-02	0.1470398E-02	0.1647081E-02	0.1836073E-02	0.2033169E-02	0.2231958E-02
0.2423750E-02	0.2597855E-02	0.2742623E-02	0.2846765E-02	0.2901347E-02	0.2901347E-02
0.2846765E-02	0.2742616E-02	0.2597855E-02	0.2423750E-02	0.2231959E-02	0.2033172E-02
0.1836073E-02					
0.1524450E-02	0.1735833E-02	0.1971555E-02	0.2229727E-02	0.2505567E-02	0.2790629E-02
0.3072189E-02	0.3333385E-02	0.3554615E-02	0.3716082E-02	0.3801462E-02	0.3801462E-02
0.3716083E-02	0.3554615E-02	0.3333385E-02	0.3072191E-02	0.2790630E-02	0.2505567E-02
0.2229728E-02					
0.1779403E-02	0.2056370E-02	0.2373283E-02	0.2730046E-02	0.3122423E-02	0.3540073E-02
0.3964804E-02	0.4369795E-02	0.4721113E-02	0.4982404E-02	0.5122226E-02	0.5122226E-02
0.4982402E-02	0.4721114E-02	0.4369795E-02	0.3964805E-02	0.3540075E-02	0.3122426E-02
0.2730048E-02					
0.2078035E-02	0.2441831E-02	0.2870432E-02	0.3368647E-02	0.3935819E-02	0.4561813E-02
0.5222211E-02	0.5874577E-02	0.6458712E-02	0.6904290E-02	0.7146703E-02	0.7146703E-02
0.6904290E-02	0.6458713E-02	0.5874577E-02	0.5222212E-02	0.4561813E-02	0.3935821E-02
0.3368648E-02					
0.2423746E-02	0.2901350E-02	0.3482917E-02	0.4184492E-02	0.5016753E-02	0.5977218E-02
0.7038929E-02	0.8137704E-02	0.9164827E-02	0.9976504E-02	0.1042856E-01	0.1042856E-01
0.9976506E-02	0.9164830E-02	0.8137704E-02	0.7038931E-02	0.5977218E-02	0.5016755E-02
0.4184494E-02					
0.2816816E-02	0.3441045E-02	0.4229566E-02	0.5222207E-02	0.6458717E-02	0.7966441E-02
0.9736417E-02	0.1168657E-01	0.1362317E-01	0.1523466E-01	0.1616434E-01	0.1616434E-01

Figure 32. Group E Sample Problems Program Results (Sheet 10 of 13)

0.1523465E-01	0.1362316E-01	0.1168656E-01	0.9736420E-02	0.7966443E-02	0.6458710E-02
0.5222210E-02					
0.3252089E-02	0.4060009E-02	0.5122227E-02	0.6525120E-02	0.8375810E-02	0.1079056E-01
0.1385566E-01	0.1753749E-01	0.2153340E-01	0.2513747E-01	0.2734019E-01	0.2734019E-01
0.2513747E-01	0.2153340E-01	0.1753749E-01	0.1385566E-01	0.1079057E-01	0.8375805E-02
0.6525122E-02					
0.3716083E-02	0.4744632E-02	0.6155100E-02	0.8118370E-02	0.1088436E-01	0.1480287E-01
0.2031023E-01	0.2778960E-01	0.3712062E-01	0.4680519E-01	0.5341564E-01	0.5341564E-01
0.4680519E-01	0.3712062E-01	0.2778961E-01	0.2031023E-01	0.1480287E-01	0.1088435E-01
0.8118365E-02					
0.4184496E-02	0.5461947E-02	0.7289382E-02	0.9976509E-02	0.1404649E-01	0.2040014E-01
0.3059037E-01	0.4717633E-01	0.7366528E-01	0.1116398E 00	0.1485900E 00	0.1485900E 00
0.1116397E 00	0.7366527E-01	0.4717632E-01	0.3059037E-01	0.2040014E-01	0.1404649E-01
0.9976502E-02					
0.4621425E-02	0.6155089E-02	0.8437158E-02	0.1197618E-01	0.1774963E-01	0.2778960E-01
0.4680519E-01	0.8795445E-01	0.2232281E 00	0.0000000E-38	0.0000000E-38	0.0000000E-38
0.0000000E-38	0.2232280E 00	0.8795444E-01	0.4680518E-01	0.2778960E-01	0.1774963E-01
0.1197619E-01					
0.4982392E-02	0.6745481E-02	0.9455831E-02	0.1385566E-01	0.2153340E-01	0.3638891E-01
0.7053790E-01	0.2009125E 00	0.0000000E-38	0.0000000E-38	0.0000000E-38	0.0000000E-38
0.0000000E-38	0.0000000E-38	0.2009125E 00	0.7053789E-01	0.3638890E-01	0.2153339E-01
0.1385566E-01					
0.5222206E-02	0.7146709E-02	0.1017016E-01	0.1523465E-01	0.2450980E-01	0.4400776E-01
0.9780605E-01	0.0000000E-38	0.0000000E-38	0.0000000E-38	0.0000000E-38	0.0000000E-38
0.0000000E-38	0.0000000E-38	0.0000000E-38	0.9780602E-01	0.4400775E-01	0.2450979E-01
0.1523465E-01					
0.5306459E-02	0.7289384E-02	0.1042856E-01	0.1574621E-01	0.2565938E-01	0.4717632E-01
0.1116397E 00	0.0000000E-38	0.0000000E-38	0.0000000E-38	0.0000000E-38	0.0000000E-38
0.0000000E-38	0.0000000E-38	0.0000000E-38	0.1116397E 00	0.4717631E-01	0.2565938E-01
0.1574621E-01					
0.5222206E-02	0.7146709E-02	0.1017016E-01	0.1523465E-01	0.2450980E-01	0.4400776E-01
0.9780605E-01	0.0000000E-38	0.0000000E-38	0.0000000E-38	0.0000000E-38	0.0000000E-38
0.0000000E-38	0.0000000E-38	0.0000000E-38	0.9780602E-01	0.4400775E-01	0.2450979E-01
0.1523465E-01					
0.4982392E-02	0.6745481E-02	0.9455831E-02	0.1385566E-01	0.2153340E-01	0.3638891E-01
0.7053790E-01	0.2009125E 00	0.0000000E-38	0.0000000E-38	0.0000000E-38	0.0000000E-38
0.0000000E-38	0.0000000E-38	0.2009125E 00	0.7053789E-01	0.3638890E-01	0.2153339E-01
0.1385566E-01					
0.4621425E-02	0.6155089E-02	0.8437158E-02	0.1197618E-01	0.1774963E-01	0.2778960E-01
0.4680519E-01	0.8795445E-01	0.2232281E 00	0.0000000E-38	0.0000000E-38	0.0000000E-38
0.0000000E-38	0.2232280E 00	0.8795444E-01	0.4680518E-01	0.2778960E-01	0.1774963E-01
0.1197619E-01					
0.4184496E-02	0.5461947E-02	0.7289382E-02	0.9976509E-02	0.1404649E-01	0.2040014E-01

Figure 32. Group E Sample Problems Program Results (Sheet 11 of 13)

0.3059037E-01	0.4717633E-01	0.7366528E-01	0.1116398E 00	0.1485900E 00	0.1485900E 00
0.1116397E 00	0.7366527E-01	0.4717632E-01	0.3059037E-01	0.2040014E-01	0.1404649E-01
0.9976502E-02					
0.3716082E-02	0.4744630E-02	0.6155098E-02	0.8118369E-02	0.1088436E-01	0.1480287E-01
0.2031023E-01	0.2778961E-01	0.3712062E-01	0.4680520E-01	0.5341565E-01	0.5341565E-01
0.4680519E-01	0.3712062E-01	0.2778960E-01	0.2031023E-01	0.1480287E-01	0.1088436E-01
0.8118371E-02					
0.3252089E-02	0.4060009E-02	0.5122227E-02	0.6525120E-02	0.8375810E-02	0.1079056E-01
0.1385566E-01	0.1753749E-01	0.2153340E-01	0.2513747E-01	0.2734019E-01	0.2734019E-01
0.2513747E-01	0.2153340E-01	0.1753749E-01	0.1385566E-01	0.1079057E-01	0.8375805E-02
0.6525122E-02					

Figure 32. Group E Sample Problems Program Results (Sheet 12 of 13)

```
NAA CONFAC II REPORT SAMPLE PROBLEMS GROUP E   K.A.TOUPS,7/31/65

RUN NO.   5   DATA USED FOR THIS RUN- *1PLAT7*7SPH1 *
                                      *      *      *
                                      *      *      *

NONE OF SURFACE *1PLAT7      * IS SEEN BY SURFACE *7SPH1       *

IF THE ABOVE RESULT IS UNEXPECTED, DO NOT BECOME ALARMED- IT HAPPENS TO THE BEST OF EM. JUST CHECK YOUR
DATA-ESPECIALLY BE SURE THAT YOU ENTERED ALL POINTS IN COUNTERCLOCKWISE ORDER, AS THEY APPEAR WHEN
FACING THE ACTIVE SIDE OF THE SURFACE, AND DERIVED FROM A RIGHT-HANDED COORDINATE SYSTEM.
```

Figure 32. Group E Sample Problems Program Results (Sheet 13 of 13)

SAMPLE PROBLEM GROUP F

The capability of computing factors to surfaces which are occluded by intervening surfaces is demonstrated in Figure 33. The data sheets are presented in Figure 34 and the results in Figure 35.

Problem 1F

In Figure 33a, the factor from 1PLA10 to 1PLA9 is desired, taking into account the intervening surface 1PLA11. The factor to 1PLA9 is determined in the following manner. The factor from 1PLA10 to 1PLA9 and 1PLA11 taken together as a multisurface will be obtained first; then the factor from 1PLA9 to 1PLA11 will be computed. The difference is the factor from 1PLA10 to 1PLA9.

The data 1PLA9, 1PLA10 and 1PLA11 are entered in data, and a class 8 entry 8COPLA is created to group 1PLA9 and 1PLA11 together. The silhouette generator will function in the complex mode as required. The factor to 8COPLA from 1PLA10 is requested as Run #1. Then, the factors from 1PLA10 to 1PLA11 is requested as Run #2. The factor from 1PLA10 to 1PLA9 is merely the difference between the two.

$$f = 0.27337 - 0.21136$$

$$f = 0.06201$$

Problem 2F

This problem (Figure 33b) illustrates the capability of determining factors to occluded solid surfaces utilizing the internal surface generator, transformations and the bridge line in the solution.

Surfaces 6PIPE1 and 6PIPE2 are internally generated. However, the surface generator cannot generate 6PIPE1 in the position shown; the surface must be generated vertically and then transformed to the position shown by 9PIPE1.

Notice that in the upper region of 1PLA13 it is possible to view 6PIPE1 and 6PIPE2 as nonconnected in the silhouette. A bridge line must be added into the data to cause the silhouette generator to include both surfaces in the silhouette from all viewpoints on 1PLA13. Bridge line 2BL1 is entered for this purpose.

The form factor to 820FEM is 0.28125 (Run #3); to 6PIPE1 alone is 0.21472 (Run #4); therefore, the form factor from 1PLA13 to 6PIPE2 is the difference or 0.06653.

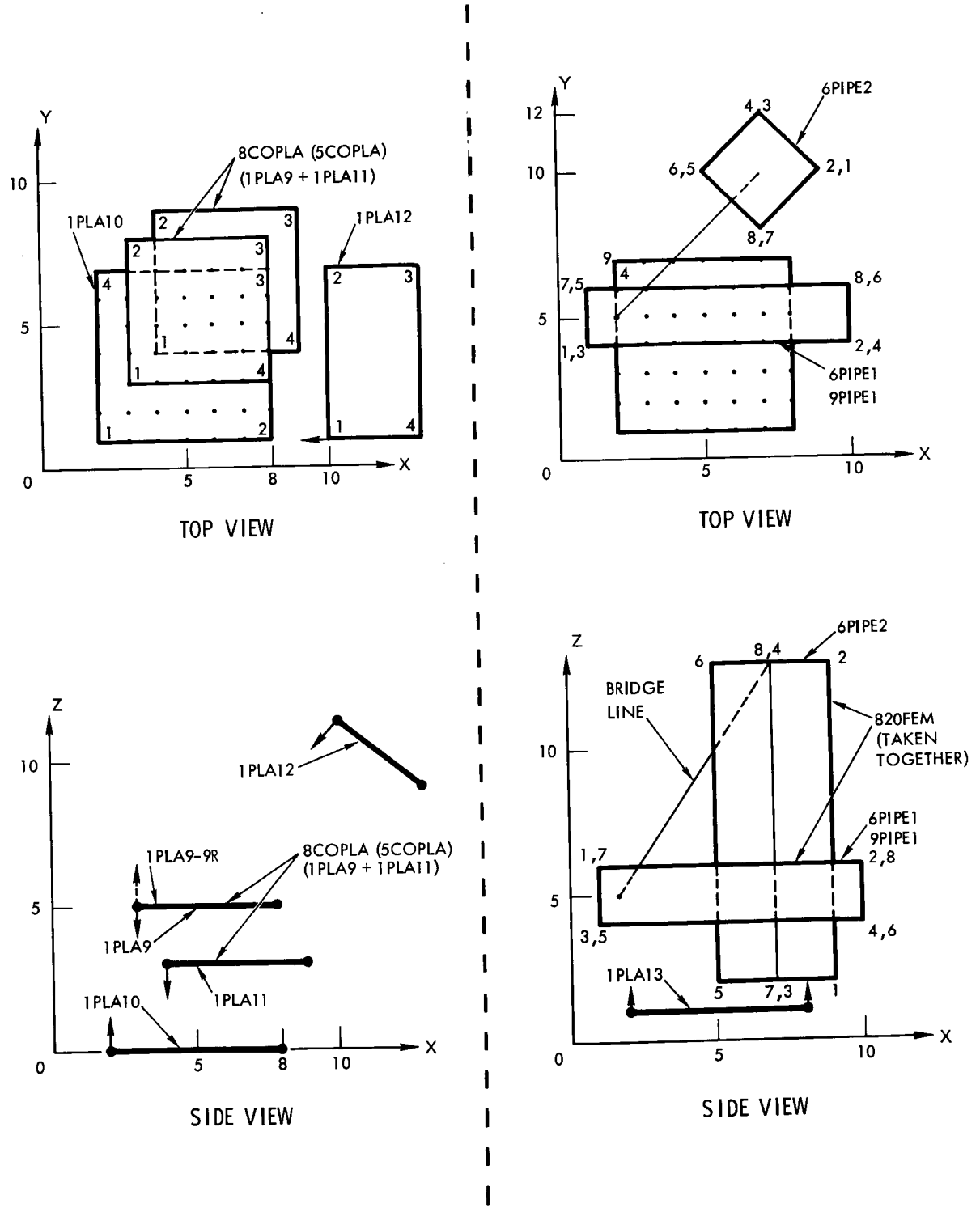

Figure 33. Group F Sample Problems Geometry

Problem 3F

This problem (Figure 33a) illustrates the wrong mode of silhouette generator operation induced by improper data presentation. The factor from 1PLA12 to 1PLA11 is desired. Surface 1PLA9 and 1PLA11 are combined into one entry as 5COPLA. The factor from 1PLA12 to 5COPLA is requested with a detailed printout to indicate the malfunction (Run #5). Note that both surfaces are not included in each silhouette because the silhouette generator is operating invalidly in the simple mode. When the factor to a class 5 or 6 surface is requested, the generator always selects the simple mode for silhouette computation. If the data require the complex mode (crossovers are present), a wrong factor will result.

The factor is requested from 1PLA12 to 8COPLA (Run #6); now the silhouette is computed properly. Then the factor from 1PLA12 to 1PLA9, with the 1PLA9 orientation vector reversed by the pseudo-transformation "9R," is requested (Run #7). The factor from 1PLA12 to 1PLA11 is the difference, or 0.04187.

FORTRAN FIXED 10 DIGIT DECIMAL DATA

DECK NO. GROUP F PROGRAMMER K.A. TOUPS DATE 7/31/65 PAGE 21 of 28 JOB NO. 2699-40

	NUMBER	IDENTIFICATION	DESCRIPTION DO NOT KEY PUNCH
1	TNAA CΦNFAC		
13	I I REPΦRT $A		
25	MPLE PRΦBLEM		
37	S GRΦUP F		
49	K.A.TΦUP$,7/	73 80	
61	31/65	601	
1	1PLA9		
13	5X5 PLATE, Z		
25	=5		
37			
49		73 80	
61		602	
1	$DC=4,3,3,		
13	5,3,8,5,8,8,		
25	5,8,3,5$		
37			
49		73 80	
61		603	
1	1PLA10		
13	6X6 PLATE IN		
25	XY PLANE		
37			
49		73 80	
61		604	

Figure 34. Group F Sample Problems Input Data Code Sheets (Sheet 1 of 8)

NORTH AMERICAN AVIATION, INC.

SPACE and INFORMATION SYSTEMS DIVISION

FORTRAN FIXED 10 DIGIT DECIMAL DATA

DECK NO. GROUP F PROGRAMMER K.A. TOUPS DATE 7/31/65 PAGE 22 of 28 JOB NO. 2699-40

	NUMBER	IDENTIFICATION	DESCRIPTION DO NOT KEY PUNCH
1	$D C=4,2,1,		
13	0,8,1,0,8,7,		
25	0,27,0$		
37			
49		73 80	
61		605	
1	1PLA11		
13	5X5 PLATE, Z		
25	=3		
37			
49		73 80	
61		606	
1	$D C=4,4,4,		
13	3,4,9,3,9,9,		
25	3,9,4,3$		
37			
49		73 80	
61		607	
1	1PLA12		
13	ØKEWED RECTA		
25	NGULAR PLATE		
37			
49		73 80	
61		608	

Figure 34. Group F Sample Problems Input Data Code Sheets (Sheet 2 of 8)

NORTH AMERICAN AVIATION, INC.
SPACE and INFORMATION SYSTEMS DIVISION

FORTRAN FIXED 10 DIGIT DECIMAL DATA

DECK NO. GROUP F PROGRAMMER K.A. TOUPS DATE 7/31/65 PAGE 23 of 28 JOB NO. 2699-40

NUMBER	IDENTIFICATION	DESCRIPTION DO NOT KEY PUNCH
$D C=4,10,1		
,11,10,7,11,		
13,7,8.5,13,		
1,8.5$		
	73 80	
	609	
5CØPLA		
1PLA9+1PLA11		
$IMPLE MØDE		
ANALYI IN	73 80	
$ILFAC	610	
$D C=8,3,3,		IMPORTANT: NOTE THAT 4 NUMBERS ARE
5,2,4,0,0,3,		ALWAYS ENTERED FOR CONNECTIONS
8,5,1,3,0,0,		DATA. WHERE NO PHYSICAL
8,8,5,2,4,0,		CONNECTION EXISTS, A ZERO
0,8,3,5,1,3,	73 80	IS ENTERED.
0,0,4,4,3,6,	611	
8,0,0,4,9,3		
,5,7,0,0,9,9		
,3,6,8,0,0,9		
,4,3,5,7,0,0		
$	73 80	
	612	

Figure 34. Group F Sample Problems Input Data Code Sheets (Sheet 3 of 8)

NORTH AMERICAN AVIATION, INC.
SPACE and INFORMATION SYSTEMS DIVISION.

FORTRAN FIXED 10 DIGIT DECIMAL DATA

DECK NO. GROUP F PROGRAMMER K.A. TOUPS DATE 7/31/65 PAGE 24 of 28 JOB NO. 2699-40

	NUMBER	IDENTIFICATION	DESCRIPTION DO NOT KEY PUNCH
1	8 CØPLA		
13			
25	CØMPLEX MØDE		
37	ANALYI IN		
49	$ILFAC	73 80	
61		613	
1	1 PLA9		
13	1 PLA11		
25			
37			
49		73 80	
61		614	
1	1 PLA13		
13	6 X6 PLATE,Z=		
25	1		
37			
49		73 80	
61		615	
1	$D C=4,2,1,		
13	1,8,1,1,8,7,		
25	1,2,7,1$		
37			
49		73 80	
61		616	

Figure 34. Group F Sample Problems Input Data Code Sheets (Sheet 4 of 8)

NORTH AMERICAN AVIATION, INC.
SPACE and INFORMATION SYSTEMS DIVISION

FORTRAN FIXED 10 DIGIT DECIMAL DATA

DECK NO. GROUP F PROGRAMMER K.A. TOUPS DATE 7/31/65 PAGE 25 of 28 JOB NO. 2699-40

	NUMBER	IDENTIFICATION	DESCRIPTION DO NOT KEY PUNCH
1	6 PIPE1		
13	2 X2X9 BØX		
25			
37			
49		73 80	
61		617	
1	$D C=4,2,0,		
13	0,0,1.414214		
25	,1.414214,9,		
37	1.414214,1.4		
49	14214$	73 80	
61		618	
1	9 PIPE1		
13	MOVE$ 6 PIPE1		
25	TØ DESIRED		
37	POSITIØN		
49		73 80	
61		619	
1	$D C=1,1,4,		
13	6,2,10,4,6,3		
25	,1,4,4$		
37			
49		73 80	
61		620	

Figure 34. Group F Sample Problems Input Data Code Sheets (Sheet 5 of 8)

NORTH AMERICAN AVIATION, INC.

SPACE and INFORMATION SYSTEMS DIVISION

FORTRAN FIXED 10 DIGIT DECIMAL DATA

DECK NO. GROUP F PROGRAMMER K.A. TOUPS DATE 7/31/65 PAGE 26 of 28 JOB NO. 2699-40

	NUMBER	IDENTIFICATION	DESCRIPTION DO NOT KEY PUNCH
1	6 P I P E 2		
13	V E R T I C A L B Ø X		
25			
37			
49		73 80	
61		6 2 1	
1	$ D C = 4 , 2 , 7 ,		
13	1 0 , 2 , 2 , 2 , 1 5 ,		
25	2 , 2 $		
37			
49		73 80	
61		6 2 2	
1	2 B L 1		
13	B R I D G E L I N E		
25	C Ø N N E C T I N G 6		
37	P I P E 1 T Ø 6 P I		
49	P E 2	73 80	
61		6 2 3	
1	$ D C = 2 , 2 , 5 ,		
13	5 , 7 , 1 0 , 1 5 $		
25			
37			
49		73 80	
61		6 2 4	

Figure 34. Group F Sample Problems Input Data Code Sheets (Sheet 6 of 8)

NORTH AMERICAN AVIATION, INC.
SPACE and INFORMATION SYSTEMS DIVISION

FORTRAN FIXED 10 DIGIT DECIMAL DATA

DECK NO. GROUP F PROGRAMMER K.A. TOUPS DATE 7/31/65 PAGE 27 of 28 JOB NO. 2699-40

	NUMBER	IDENTIFICATION	DESCRIPTION DO NOT KEY PUNCH
1	8 2ΦFEM		
13			
25			
37			
49		73 80	
61		625	
1	6 PIPE19PIPE1		
13	6 PIPE2		
25	2 BL1		
37			
49		73 80	
61		626	
1	1 PLA108CΦPLA		
13			
25	D 1 1		
37	1 PLA101PLA11		
49		73 80	
61		627	
1	1 PLA1382ΦFEM		
13			
25			
37	1 PLA136PIPE1		
49	9PIPE1	73 80	
61		628	

Figure 34. Group F Sample Problems Input Data Code Sheets (Sheet 7 of 8)

NORTH AMERICAN AVIATION, INC.

SPACE and INFORMATION SYSTEMS DIVISION

FORTRAN FIXED 10 DIGIT DECIMAL DATA

DECK NO. GROUP F PROGRAMMER K.A. TOUPS DATE 7/31/65 PAGE 28 of 28 JOB NO. 2699-40

	NUMBER	IDENTIFICATION	DESCRIPTION DO NOT KEY PUNCH
1	1 PLA125CΦPLA		
13			
25			
37	1 PLA128CΦPLA		
49		73 80	
61		629	
1	1 PLA121PLA9		
13	9R		
25			
37			
49		73 80	
61		630	
1			
13			
25			
37			
49		73 80	
61			
1			
13			
25			
37			
49		73 80	
61			

Figure 34. Group F Sample Problems Input Data Code Sheets (Sheet 8 of 8)

NORTH AMERICAN AVIATION, INC.
SPACE and INFORMATION SYSTEMS DIVISION

```
                    NAA SPACE AND INFORMATION SYSTEMS DIVISION
                RADIANT-INTERCHANGE CONFIGURATION FACTOR PROGRAM

                                C O N F A C   I I

          NAA CONFAC II REPORT SAMPLE PROBLEMS GROUP F    K.A.TOUPS,7/31/65

                                I N P U T   D A T A

***** DATA NAME- *1PLA9        * 5X5 PLATE, Z=5

POINT        X              Y              Z              POINT        X              Y              Z
        0.3000000E 01  0.3000000E 01  0.4000000E 01---(INTERNALLY GENERATED ORIENTATION VECTOR)
   1    0.3000000E 01  0.3000000E 01  0.5000000E 01        2    0.3000000E 01  0.8000000E 01  0.5000000E 01
   3    0.8000000E 01  0.8000000E 01  0.5000000E 01        4    0.8000000E 01  0.3000000E 01  0.5000000E 01

***** DATA NAME- *1PLA10       * 6X6 PLATE IN XY PLANE

POINT        X              Y              Z              POINT        X              Y              Z
        0.2000000E 01  0.1000000E 01  0.1000000E 01---(INTERNALLY GENERATED ORIENTATION VECTOR)
   1    0.2000000E 01  0.1000000E 01  0.0000000E-38        2    0.8000000E 01  0.1000000E 01  0.0000000E-38
   3    0.8000000E 01  0.7000000E 01  0.0000000E-38        4    0.2000000E 01  0.7000000E 01  0.0000000E-38

***** DATA NAME- *1PLA11       * 5X5 PLATE, Z=3

POINT        X              Y              Z              POINT        X              Y              Z
        0.4000000E 01  0.4000000E 01  0.2000000E 01---(INTERNALLY GENERATED ORIENTATION VECTOR)
   1    0.4000000E 01  0.4000000E 01  0.3000000E 01        2    0.4000000E 01  0.9000000E 01  0.3000000E 01
   3    0.9000000E 01  0.9000000E 01  0.3000000E 01        4    0.9000000E 01  0.4000000E 01  0.3000000E 01

***** DATA NAME- *1PLA12       * SKEWED RECTANGULAR PLATE

POINT        X              Y              Z              POINT        X              Y              Z
        0.9359816E 01  0.1000000E 01  0.1023178E 02---(INTERNALLY GENERATED ORIENTATION VECTOR)
```

Figure 35. Group F Sample Problems Program Results (Sheet 1 of 24)

```
   1   0.1000000E 02  0.1000000E 01  0.1100000E 02        2   0.1000000E 02  0.7000000E 01  0.1100000E 02
   3   0.1300000E 02  0.7000000E 01  0.8500000E 01        4   0.1300000E 02  0.1000000E 01  0.8500000E 01


***** DATA NAME- *5CØPLA       * 1PLA9+1PLA11            SIMPLE MØDE ANALYSIS IN SILFAC

PØINT        X              Y              Z            PØINT        X              Y              Z
   1   0.3000000E 01  0.3000000E 01  0.5000000E 01        2   0.3000000E 01  0.8000000E 01  0.5000000E 01
   3   0.8000000E 01  0.8000000E 01  0.5000000E 01        4   0.8000000E 01  0.3000000E 01  0.5000000E 01
   5   0.4000000E 01  0.4000000E 01  0.3000000E 01        6   0.4000000E 01  0.9000000E 01  0.3000000E 01
   7   0.9000000E 01  0.9000000E 01  0.3000000E 01        8   0.9000000E 01  0.4000000E 01  0.3000000E 01

PØINT  CØNNECTING PØINTS    PØINT  CØNNECTING PØINTS    PØINT  CØNNECTING PØINTS    PØINT  CØNNECTING PØINTS
   1      2,  4,  0,  0       2      1,  3,  0,  0       3      2,  4,  0,  0       4      1,  3,  0,  0
   5      6,  8,  0,  0       6      5,  7,  0,  0       7      6,  8,  0,  0       8      5,  7,  0,  0


***** DATA NAME- *8CØPLA       *              CØMPLEX MØDE ANALYSIS IN SILFAC

MULTISURFACE DATA-

1PLA9 ,      ,1PLA11,      ,      ,      ,      ,      ,      ,      ,      ,


***** DATA NAME- *1PLA13       * 6X6 PLATE,Z=1

PØINT        X              Y              Z            PØINT        X              Y              Z
     0.2000000E 01  0.1000000E 01  0.2000000E 01---(INTERNALLY GENERATED ØRIENTATIØN VECTØR)
   1   0.2000000E 01  0.1000000E 01  0.1000000E 01        2   0.8000000E 01  0.1000000E 01  0.1000000E 01
   3   0.8000000E 01  0.7000000E 01  0.1000000E 01        4   0.2000000E 01  0.7000000E 01  0.1000000E 01


***** DATA NAME- *6PIPE1       * 2X2X9 BØX

SURFACE SPECIFICATIØNS-

NØ ØF X-SECTIØNS =  2          NØ ØF X-SECTIØN BØUNDARY DIVISIØNS =  4
```

Figure 35. Group F Sample Problems Program Results (Sheet 2 of 24)

```
LØCATIØN ØF VERTICAL CENTERLINE, X= 0.0000000E-38, Y= 0.0000000E-38

X-SECTIØN NØ.      X-AXIS RADIUS       Y-AXIS RADIUS       ELEVATIØN ABØVE XY PLANE
     1             0.1414214E 01       0.1414214E 01       0.0000000E-38
     2             0.1414214E 01       0.1414214E 01       0.9000000E 01

THE FØLLØWING INTERNALLY GENERATED SURFACE DATA RESULTED FRØM THE ABØVE SPECIFICATIØNS-

PØINT        X                Y                Z              PØINT        X                Y                Z
   1   0.1414214E 01   0.0000000E-38   0.0000000E-38            2   0.1414214E 01   0.0000000E-38   0.9000000E 01
   3   0.4439333E-13   0.1414214E 01   0.0000000E-38            4   0.4439333E-13   0.1414214E 01   0.9000000E 01
   5  -0.1414214E 01   0.8878666E-13   0.0000000E-38            6  -0.1414214E 01   0.8878666E-13   0.9000000E 01
   7  -0.1331800E-12  -0.1414214E 01   0.0000000E-38            8  -0.1331800E-12  -0.1414214E 01   0.9000000E 01

PØINT  CØNNECTING PØINTS   PØINT  CØNNECTING PØINTS   PØINT  CØNNECTING PØINTS   PØINT  CØNNECTING PØINTS
   1      3,  2,  7,  0      2      4,  0,  8,  1      3      5,  4,  1,  0      4      6,  0,  2,  3
   5      7,  6,  3,  0      6      8,  0,  4,  5      7      1,  8,  5,  0      8      2,  0,  6,  7


***** DATA NAME- *9PIPE1      * MØVES 6PIPE1 TØ DESIRED PØSITIØN

TRANSFØRMATIØN DATA-

PØINT        X                Y                Z              PØINT        X                Y                Z
   1   0.1000000E 01   0.4000000E 01   0.6000000E 01            2   0.1000000E 02   0.4000000E 01   0.6000000E 01
   3   0.1000000E 01   0.4000000E 01   0.4000000E 01


***** DATA NAME- *6PIPE2      * VERTICAL BØX

SURFACE SPECIFICATIØNS-

NØ ØF X-SECTIØNS =  2          NØ ØF X-SECTIØN BØUNDARY DIVISIØNS =  4

LØCATIØN ØF VERTICAL CENTERLINE, X= 0.7000000E 01, Y= 0.1000000E 02

X-SECTIØN NØ.      X-AXIS RADIUS       Y-AXIS RADIUS       ELEVATIØN ABØVE XY PLANE
     1             0.2000000E 01       0.2000000E 01       0.2000000E 01
     2             0.2000000E 01       0.2000000E 01       0.1500000E 02
```

Figure 35. Group F Sample Problems Program Results (Sheet 3 of 24)

```
THE FOLLOWING INTERNALLY GENERATED SURFACE DATA RESULTED FROM THE ABOVE SPECIFICATIONS-

POINT        X              Y              Z              POINT        X              Y              Z
   1   0.9000000E 01  0.1000000E 02  0.2000000E 01          2   0.9000000E 01  0.1000000E 02  0.1500000E 02
   3   0.7000000E 01  0.1200000E 02  0.2000000E 01          4   0.7000000E 01  0.1200000E 02  0.1500000E 02
   5   0.5000000E 01  0.1000000E 02  0.2000000E 01          6   0.5000000E 01  0.1000000E 02  0.1500000E 02
   7   0.7000000E 01  0.8000000E 01  0.2000000E 01          8   0.7000000E 01  0.8000000E 01  0.1500000E 02

POINT  CONNECTING POINTS    POINT  CONNECTING POINTS    POINT  CONNECTING POINTS    POINT  CONNECTING POINTS
   1      3,  2,  7,  0       2      4,  0,  8,  1        3      5,  4,  1,  0        4      6,  0,  2,  3
   5      7,  6,  3,  0       6      8,  0,  4,  5        7      1,  8,  5,  0        8      2,  0,  6,  7


***** DATA NAME- *2BL1          * BRIDGE LINE CONNECTING 6PIPE1 TO 6PIPE2

POINT        X              Y              Z              POINT        X              Y              Z
   1   0.2000000E 01  0.5000000E 01  0.5000000E 01          2   0.7000000E 01  0.1000000E 02  0.1500000E 02


***** DATA NAME- *82UFEM       *

MULTISURFACE DATA-

6PIPE1,9PIPE1,6PIPE2,      ,2BL1  ,      ,      ,      ,      ,      ,      ,
```

Figure 35. Group F Sample Problems Program Results (Sheet 4 of 24)

```
RUN NO.   1   DATA USED FOR THIS RUN- *1PLA10*8COPLA*
                                      *      *      *
                                      *D    1*     1*
```

MAPPING SURFACE 2 SILHOUETTE COMPUTED FROM MAPPING POINT SHOWN

LINE	PT									
1	1	1	4	9	8	7	6	10	2	1
1	2	1	4	9	8	7	6	10	2	1
1	3	1	4	9	8	7	6	10	2	1
1	4	1	4	9	8	7	6	10	2	1
1	5	1	4	9	8	7	6	5	10	1
1	6	1	4	9	8	7	6	5	10	1
1	7	1	4	9	8	7	6	5	10	1
2	1	1	4	9	8	7	6	10	2	1
2	2	1	4	9	8	7	6	10	2	1
2	3	1	4	9	8	7	6	10	2	1
2	4	1	4	9	8	7	6	10	2	1
2	5	1	4	9	8	7	6	5	10	1
2	6	1	4	9	8	7	6	5	10	1
2	7	1	4	9	8	7	6	5	10	1
3	1	1	4	9	8	7	6	10	2	1
3	2	1	4	9	8	7	6	10	2	1
3	3	1	4	9	8	7	6	10	2	1
3	4	1	4	9	8	7	6	10	2	1
3	5	1	4	9	8	7	6	5	10	1
3	6	1	4	9	8	7	6	5	10	1
3	7	1	4	9	8	7	6	5	10	1
4	1	1	4	9	8	7	6	10	2	1
4	2	1	4	9	8	7	6	10	2	1
4	3	1	4	9	8	7	6	10	2	1
4	4	1	4	9	8	7	6	10	2	1
4	5	1	4	9	8	7	6	5	10	1
4	6	1	4	9	8	7	6	5	10	1
4	7	1	4	9	8	7	6	5	10	1
5	1	1	4	9	8	7	6	10	2	1
5	2	1	4	9	8	7	6	10	2	1
5	3	1	4	9	8	7	6	10	2	1
5	4	1	4	9	8	7	6	10	2	1

Figure 35. Group F Sample Problems Program Results (Sheet 5 of 24)

```
 5   5      1   4   9   8   7   6   5  10   1
 5   6      1   4   9   8   7   6   5  10   1
 5   7      1   4   9   8   7   6   5  10   1
 6   1      5   8   7   6   9   2   1  10   5
 6   2      5   8   7   6   9   2   1  10   5
 6   3      5   8   7   6   9   2   1  10   5
 6   4      5   8   7   6   9   2   1  10   5
 6   5      5   8   7   6   5
 6   6      5   8   7   6   5
 6   7      5   8   7   6   5
 7   1      5   8   7   6   9   2   1  10   5
 7   2      5   8   7   6   9   2   1  10   5
 7   3      5   8   7   6   9   2   1  10   5
 7   4      5   8   7   6   9   2   1  10   5
 7   5      5   8   7   6   5
 7   6      5   8   7   6   5
 7   7      5   8   7   6   5

THE FORM FACTOR FROM SURFACE *1PLA10      * TO SURFACE *8COPLA      * = 0.27337

THE EXCHANGE COEFFICIENT (FA)=   0.98413E 01 SQ UNITS

                  THE MAPPING AREA = 0.3600000E 02 SQ UNITS

THE AREA OF SURFACE *1PLA10      * = 0.3600000E 02 SQ UNITS.

THE FOLLOWING ARE THE (FINAL) SURFACE COORDINATES USED FOR THE FACTOR COMPUTATION-


***** DATA NAME- *1PLA10      *

POINT       X              Y              Z            POINT       X              Y              Z
       0.2000000E 01  0.1000000E 01  0.1000000E 01---(INTERNALLY GENERATED ORIENTATION VECTOR)
   1   0.2000000E 01  0.1000000E 01  0.0000000E-38       2   0.8000000E 01  0.1000000E 01  0.0000000E-38
   3   0.8000000E 01  0.7000000E 01  0.0000000E-38       4   0.2000000E 01  0.7000000E 01  0.0000000E-38


***** DATA NAME- *8COPLA      *

POINT       X              Y              Z            POINT       X              Y              Z
```

Figure 35. Group F Sample Problems Program Results (Sheet 6 of 24)

```
  1   0.3000000E 01  0.3000000E 01  0.5000000E 01      2   0.3000000E 01  0.8000000E 01  0.5000000E 01
  3   0.8000000E 01  0.8000000E 01  0.5000000E 01      4   0.8000000E 01  0.3000000E 01  0.5000000E 01
  5   0.4000000E 01  0.4000000E 01  0.3000000E 01      6   0.4000000E 01  0.9000000E 01  0.3000000E 01
  7   0.9000000E 01  0.9000000E 01  0.3000000E 01      8   0.9000000E 01  0.4000000E 01  0.3000000E 01

POINT  CONNECTING POINTS   POINT  CONNECTING POINTS   POINT  CONNECTING POINTS   POINT  CONNECTING POINTS
  1      4,  2,  0,  0      2      1,  3,  0,  0       3      2,  4,  0,  0       4      3,  1,  0,  0
  5      8,  6,  0,  0      6      5,  7,  0,  0       7      6,  8,  0,  0       8      7,  5,  0,  0

COORDINATES OF POINTS ON BOUNDARY OF SURF    *1PLA10      * FOR EACH Y INTERVAL

     X-LEFT          X-RIGHT          Y                     X-LEFT          X-RIGHT          Y

 0.2000000E 01  0.8000000E 01  0.1000000E 01            0.2000000E 01  0.8000000E 01  0.2000000E 01
 0.2000000E 01  0.8000000E 01  0.3000000E 01            0.2000000E 01  0.8000000E 01  0.4000000E 01
 0.2000000E 01  0.8000000E 01  0.5000000E 01            0.2000000E 01  0.8000000E 01  0.6000000E 01
 0.2000000E 01  0.8000000E 01  0.7000000E 01

NO. OF HORIZONTAL INCREMENTS=  6  NO. OF VERTICAL INCREMENTS=  6


THE FOLLOWING ARE PLANE POINT CONFIGURATION FACTORS COMPUTED FOR THIS RUN
LOWEST GRID LINE FIRST, FROM X-LEFT TO X-RIGHT.

 0.8549479E-01  0.1053000E 00  0.1227148E 00  0.1340877E 00  0.1377212E 00  0.1318948E 00
 0.1167405E 00
 0.1130059E 00  0.1428044E 00  0.1698850E 00  0.1883679E 00  0.1958413E 00  0.1882831E 00
 0.1647709E 00
 0.1428044E 00  0.1848440E 00  0.2244727E 00  0.2531131E 00  0.2678413E 00  0.2602939E 00
 0.2266967E 00
 0.1698850E 00  0.2244727E 00  0.2778939E 00  0.3188091E 00  0.3440795E 00  0.3393076E 00
 0.2959300E 00
 0.1883679E 00  0.2531131E 00  0.3188091E 00  0.3714197E 00  0.4070679E 00  0.4058596E 00
 0.3546937E 00
 0.1958413E 00  0.2678413E 00  0.3440795E 00  0.4070679E 00  0.4496363E 00  0.4496363E 00
 0.3927660E 00
 0.1882831E 00  0.2602939E 00  0.3393076E 00  0.4058596E 00  0.4496363E 00  0.4496363E 00
 0.3927660E 00
```

Figure 35. Group F Sample Problems Program Results (Sheet 7 of 24)

```
                NAA CONFAC II REPORT SAMPLE PROBLEMS GROUP F   K.A.TOUPS,7/31/65

RUN NO.   2   DATA USED FOR THIS RUN- *1PLA10*1PLA11*
                                      *      *      *
                                      *      *      *

THE FORM FACTOR FROM SURFACE *1PLA10      * TO SURFACE *1PLA11      * = 0.21136

THE EXCHANGE COEFFICIENT (FA)=   0.76088E 01 SQ UNITS

                THE MAPPING AREA = 0.3600000E 02 SQ UNITS

THE AREA OF SURFACE *1PLA10      * = 0.3600000E 02 SQ UNITS.

THE AREA OF SURFACE *1PLA11      * = 0.2500000E 02 SQ UNITS.

THE FORM FACTOR FROM SURFACE *1PLA11      * TO SURFACE *1PLA10      * = 0.30435

THE FOLLOWING ARE THE (FINAL) SURFACE COORDINATES USED FOR THE FACTOR COMPUTATION-


***** DATA NAME- *1PLA10      *

POINT       X              Y              Z            POINT       X              Y              Z
       0.2000000E 01  0.1000000E 01  0.1000000E 01---(INTERNALLY GENERATED ORIENTATION VECTOR)
   1   0.2000000E 01  0.1000000E 01  0.0000000E-38       2   0.8000000E 01  0.1000000E 01  0.0000000E-38
   3   0.8000000E 01  0.7000000E 01  0.0000000E-38       4   0.2000000E 01  0.7000000E 01  0.0000000E-38


***** DATA NAME- *1PLA11      *

POINT       X              Y              Z            POINT       X              Y              Z
       0.4000000E 01  0.4000000E 01  0.2000000E 01---(INTERNALLY GENERATED ORIENTATION VECTOR)
   1   0.4000000E 01  0.4000000E 01  0.3000000E 01       2   0.4000000E 01  0.9000000E 01  0.3000000E 01
   3   0.9000000E 01  0.9000000E 01  0.3000000E 01       4   0.9000000E 01  0.4000000E 01  0.3000000E 01

COORDINATES OF POINTS ON BOUNDARY OF SURF    *1PLA10      * FOR EACH Y INTERVAL
```

Figure 35. Group F Sample Problems Program Results (Sheet 8 of 24)

X-LEFT	X-RIGHT	Y
0.2000000E 01	0.8000000E 01	0.1000000E 01
0.2000000E 01	0.8000000E 01	0.3000000E 01
0.2000000E 01	0.8000000E 01	0.5000000E 01
0.2000000E 01	0.8000000E 01	0.7000000E 01

X-LEFT	X-RIGHT	Y
0.2000000E 01	0.8000000E 01	0.2000000E 01
0.2000000E 01	0.8000000E 01	0.4000000E 01
0.2000000E 01	0.8000000E 01	0.6000000E 01

NO. OF HORIZONTAL INCREMENTS= 6 NO. OF VERTICAL INCREMENTS= 6

THE FOLLOWING ARE PLANE POINT CONFIGURATION FACTORS COMPUTED FOR THIS RUN
LOWEST GRID LINE FIRST, FROM X-LEFT TO X-RIGHT.

0.2571121E-01	0.3491454E-01	0.4487989E-01	0.5346228E-01	0.5840757E-01	0.5840757E-01
0.5346228E-01					
0.3838323E-01	0.5576248E-01	0.7595850E-01	0.9394832E-01	0.1043396E 00	0.1043396E 00
0.9394832E-01					
0.5576248E-01	0.8716592E-01	0.1264627E 00	0.1624429E 00	0.1830053E 00	0.1830053E 00
0.1624429E 00					
0.7595850E-01	0.1264627E 00	0.1934735E 00	0.2559109E 00	0.2910528E 00	0.2910528E 00
0.2559109E 00					
0.9394832E-01	0.1624429E 00	0.2559109E 00	0.3436941E 00	0.3927660E 00	0.3927660E 00
0.3436941E 00					
0.1043396E 00	0.1830053E 00	0.2910528E 00	0.3927660E 00	0.4496363E 00	0.4496363E 00
0.3927660E 00					
0.1043396E 00	0.1830053E 00	0.2910528E 00	0.3927660E 00	0.4496363E 00	0.4496363E 00
0.3927660E 00					

Figure 35. Group F Sample Problems Program Results (Sheet 9 of 24)

NAA CONFAC II REPORT SAMPLE PROBLEMS GROUP F K.A.TOUPS,7/31/65

RUN NO. 3 DATA USED FOR THIS RUN- *1PLA13*820FEM*
*
*

MAPPING SURFACE 2 SILHOUETTE COMPUTED FROM MAPPING POINT SHOWN

LINE	PT															
1	1	16	19	2	4	6	20	9	11	13	21	5	3	1	22	16
1	2	16	19	2	4	6	20	9	11	13	21	5	3	1	22	16
1	3	16	19	2	4	6	20	9	11	13	21	5	3	1	22	16
1	4	16	19	2	4	6	20	9	11	13	21	5	3	1	22	16
1	5	16	19	2	4	6	20	9	11	13	21	5	3	1	22	16
1	6	16	19	2	4	6	20	9	11	13	21	5	3	1	22	16
1	7	16	19	2	4	6	20	9	11	13	21	5	3	1	22	16
2	1	1	2	4	6	19	9	11	13	20	5	3	1			
2	2	1	2	4	6	19	9	11	13	20	5	3	1			
2	3	1	2	4	6	19	9	11	13	20	5	3	1			
2	4	1	2	4	6	19	9	11	13	20	5	3	1			
2	5	1	2	4	6	19	9	11	13	20	5	3	1			
2	6	1	2	4	6	19	9	11	13	20	5	3	1			
2	7	1	2	4	6	19	9	11	13	20	5	3	1			
3	1	1	2	4	6	19	20	9	11	13	21	5	3	1		
3	2	1	2	4	6	19	9	11	13	20	5	3	1			
3	3	1	2	4	6	19	9	11	13	20	5	3	1			
3	4	1	2	4	6	19	9	11	13	20	5	3	1			
3	5	1	2	4	6	19	9	11	13	20	5	3	1			
3	6	1	2	4	6	19	9	11	13	20	5	3	1			
3	7	1	2	4	6	19	9	11	13	20	5	3	1			
4	1	3	4	6	19	15	9	11	13	20	5	3				
4	2	3	4	6	19	20	9	11	13	21	5	3				
4	3	3	4	6	19	9	11	13	20	5	3					
4	4	3	4	6	19	9	11	13	20	5	3					
4	5	3	4	6	19	9	11	13	20	5	3					
4	6	3	4	6	19	9	11	13	20	5	3					
4	7	3	4	6	19	9	11	13	20	5	3					
5	1	3	4	6	19	15	9	11	13	14	20	5	3			
5	2	3	4	6	19	15	9	11	13	14	20	5	3			
5	3	3	4	6	19	10	20	9	11	13	14	21	5	3		
5	4	3	4	6	19	10	9	11	13	14	20	5	3			

Figure 35. Group F Sample Problems Program Results (Sheet 10 of 24)

```
 5   5      3   4   6  19  10   9  11  13  14  20   5   3
 5   6      3   4   6  19  10   9  11  13  14  20   5   3
 5   7      3   4   6  19  10   9  11  13  14  20   5   3
 6   1      3   4   6   8  19  20  16  15   9  11  13  14  21  22   7   5   3
 6   2      3   4   6   8  19  20  16  15   9  11  13  14  21  22   7   5   3
 6   3      3   4   6   8  19  20  16  15   9  11  13  14  21  22   7   5   3
 6   4      3   4   6   8  19  20  16  10   9  11  13  14  21  22   7   5   3
 6   5      3   4   6   8  19  20  16  10   9  11  13  14  21  22   7   5   3
 6   6      3   4   6   8  19  20  16  10   9  11  13  14  21  22   7   5   3
 6   7      3   4   6   8  19  20  16  10   9  11  13  14  21  22   7   5   3
 7   1      3   4   6   8  19  20  16  15   9  11  21  12  14  22  23   7   5   3
 7   2      3   4   6   8  19  20  16  15   9  11  13  14  21  22   7   5   3
 7   3      3   4   6   8  19  20  16  15   9  11  13  14  21  22   7   5   3
 7   4      3   4   6   8  19  20  16  15   9  11  13  14  21  22   7   5   3
 7   5      3   4   6   8  19  20  16  10   9  11  13  14  21  22   7   5   3
 7   6      3   4   6   8  19  20  16  10   9  11  13  14  21  22   7   5   3
 7   7      3   4   6   8  19  20  16  10   9  11  13  21  14  22  23   7   5   3

THE FØRM FACTØR FRØM SURFACE *1PLA13      * TØ SURFACE *82ØFEM      * = 0.28125

THE EXCHANGE CØEFFICIENT (FA)=   0.10125E 02 SQ UNITS

                  THE MAPPING AREA = 0.3600000E 02 SQ UNITS

THE AREA ØF SURFACE *1PLA13      * = 0.3600000E 02 SQ UNITS.

THE FØLLØWING ARE THE (FINAL) SURFACE CØØRDINATES USED FØR THE FACTØR CØMPUTATIØN-


***** DATA NAME- *1PLA13      *

PØINT       X              Y              Z            PØINT       X              Y              Z
       0.0000000E-38  0.0000000E-38  0.1000000E 01---(INTERNALLY GENERATED ØRIENTATIØN VECTØR)
   1   0.0000000E-38  0.0000000E-38  0.0000000E-38       2   0.6000000E 01  0.0000000E-38  0.0000000E-38
   3   0.6000000E 01  0.6000000E 01  0.0000000E-38       4   0.0000000E-38  0.6000000E 01  0.0000000E-38


***** DATA NAME- *82ØFEM      *

PØINT       X              Y              Z            PØINT       X              Y              Z
```

Figure 35. Group F Sample Problems Program Results (Sheet 11 of 24)

1	-0.1000000E 01	0.3000000E 01	0.5000000E 01	2	0.8000000E 01	0.3000000E 01	0.5000000E 01
3	-0.1000000E 01	0.3000000E 01	0.3000000E 01	4	0.8000000E 01	0.3000000E 01	0.3000000E 01
5	-0.1000000E 01	0.5000000E 01	0.3000000E 01	6	0.8000000E 01	0.5000000E 01	0.3000000E 01
7	-0.1000000E 01	0.5000000E 01	0.5000000E 01	8	0.8000000E 01	0.5000000E 01	0.5000000E 01
9	0.7000000E 01	0.9000000E 01	0.1000000E 01	10	0.7000000E 01	0.9000000E 01	0.1400000E 02
11	0.5000000E 01	0.1100000E 02	0.1000000E 01	12	0.5000000E 01	0.1100000E 02	0.1400000E 02
13	0.3000000E 01	0.9000000E 01	0.1000000E 01	14	0.3000000E 01	0.9000000E 01	0.1400000E 02
15	0.5000000E 01	0.7000000E 01	0.1000000E 01	16	0.5000000E 01	0.7000000E 01	0.1400000E 02
17	0.0000000E-38	0.4000000E 01	0.4000000E 01	18	0.5000000E 01	0.9000000E 01	0.1400000E 02

POINT	CONNECTING POINTS	POINT	CONNECTING POINTS	POINT	CONNECTING POINTS	POINT	CONNECTING POINTS
1	3, 2, 7, 0	2	4, 8, 1, 0	3	5, 4, 1, 0	4	6, 2, 3, 0
5	7, 6, 3, 0	6	8, 4, 5, 0	7	1, 8, 5, 0	8	2, 6, 7, 0
9	11, 10, 15, 0	10	12, 16, 9, 0	11	13, 12, 9, 0	12	14, 10, 11, 0
13	15, 14, 11, 0	14	16, 12, 13, 0	15	9, 16, 13, 0	16	10, 14, 15, 0
17	18, 18, 0, 0	18	17, 17, 0, 0				

COORDINATES OF POINTS ON BOUNDARY OF SURF *1PLA13 * FOR EACH Y INTERVAL

X-LEFT	X-RIGHT	Y	X-LEFT	X-RIGHT	Y
0.0000000E-38	0.6000000E 01	0.0000000E-38	0.0000000E-38	0.6000000E 01	0.1000000E 01
0.0000000E-38	0.6000000E 01	0.2000000E 01	0.0000000E-38	0.6000000E 01	0.3000000E 01
0.0000000E-38	0.6000000E 01	0.4000000E 01	0.0000000E-38	0.6000000E 01	0.5000000E 01
0.0000000E-38	0.6000000E 01	0.6000000E 01			

NO. OF HORIZONTAL INCREMENTS= 6 NO. OF VERTICAL INCREMENTS= 6

THE FOLLOWING ARE PLANE POINT CONFIGURATION FACTORS COMPUTED FOR THIS RUN
LOWEST GRID LINE FIRST, FROM X-LEFT TO X-RIGHT.

0.1145098E 00	0.1329408E 00	0.1457498E 00	0.1525982E 00	0.1535865E 00	0.1485711E 00
0.1372063E 00					
0.1494541E 00	0.1758640E 00	0.1935055E 00	0.2028280E 00	0.2045044E 00	0.1982487E 00
0.1829119E 00					
0.1900968E 00	0.2259356E 00	0.2489559E 00	0.2612524E 00	0.2642969E 00	0.2574969E 00
0.2384187E 00					
0.2261132E 00	0.2678093E 00	0.2957794E 00	0.3115554E 00	0.3170587E 00	0.3110727E 00
0.2897589E 00					

Figure 35. Group F Sample Problems Program Results (Sheet 12 of 24)

0.2782689E 00	0.3296657E 00	0.3591793E 00	0.3809634E 00	0.3903825E 00	0.3850229E 00
0.3597687E 00					
0.2631508E 00	0.3146967E 00	0.3492657E 00	0.3656159E 00	0.3809775E 00	0.3787754E 00
0.3536778E 00					
0.2490930E 00	0.3034336E 00	0.3501733E 00	0.3844523E 00	0.3862797E 00	0.3884276E 00
0.3604015E 00					

Figure 35. Group F Sample Problems Program Results (Sheet 13 of 24)

NAA CONFAC II REPORT SAMPLE PROBLEMS GROUP F K.A.TOUPS,7/31/65

```
RUN NO.   4   DATA USED FOR THIS RUN- *1PLA13*6PIPE1*
                                      *      *9PIPE1*
                                      *      *      *
```

MAPPING SURFACE 2 SILHOUETTE COMPUTED FROM MAPPING POINT SHOWN

LINE	PT							
1	1	1	2	4	6	5	3	1
1	2	1	2	4	6	5	3	1
1	3	1	2	4	6	5	3	1
1	4	1	2	4	6	5	3	1
1	5	1	2	4	6	5	3	1
1	6	1	2	4	6	5	3	1
1	7	1	2	4	6	5	3	1
2	1	1	2	4	6	5	3	1
2	2	1	2	4	6	5	3	1
2	3	1	2	4	6	5	3	1
2	4	1	2	4	6	5	3	1
2	5	1	2	4	6	5	3	1
2	6	1	2	4	6	5	3	1
2	7	1	2	4	6	5	3	1
3	1	1	2	4	6	5	3	1
3	2	1	2	4	6	5	3	1
3	3	1	2	4	6	5	3	1
3	4	1	2	4	6	5	3	1
3	5	1	2	4	6	5	3	1
3	6	1	2	4	6	5	3	1
3	7	1	2	4	6	5	3	1
4	1	3	4	6	5	3		
4	2	3	4	6	5	3		
4	3	3	4	6	5	3		
4	4	3	4	6	5	3		
4	5	3	4	6	5	3		
4	6	3	4	6	5	3		
4	7	3	4	6	5	3		
5	1	3	4	6	5	3		
5	2	3	4	6	5	3		
5	3	3	4	6	5	3		
5	4	3	4	6	5	3		

Figure 35. Group F Sample Problems Program Results (Sheet 14 of 24)

```
 5   5      3   4   6   5   3
 5   6      3   4   6   5   3
 5   7      3   4   6   5   3
 6   1      3   4   6   8   7   5   3
 6   2      3   4   6   8   7   5   3
 6   3      3   4   6   8   7   5   3
 6   4      3   4   6   8   7   5   3
 6   5      3   4   6   8   7   5   3
 6   6      3   4   6   8   7   5   3
 6   7      3   4   6   8   7   5   3
 7   1      3   4   6   8   7   5   3
 7   2      3   4   6   8   7   5   3
 7   3      3   4   6   8   7   5   3
 7   4      3   4   6   8   7   5   3
 7   5      3   4   6   8   7   5   3
 7   6      3   4   6   8   7   5   3
 7   7      3   4   6   8   7   5   3

THE FØRM FACTØR FRØM SURFACE *1PLA13      * TØ SURFACE *6PIPE19PIPE1* = 0.21472

THE EXCHANGE CØEFFICIENT (FA)=   0.77299E 01 SQ UNITS

                THE MAPPING AREA = 0.3600000E 02 SQ UNITS

THE AREA ØF SURFACE *1PLA13      * = 0.3600000E 02 SQ UNITS.

THE AREA ØF SURFACE *6PIPE19PIPE1* = 0.8000003E 02 SQ UNITS.

THE FØRM FACTØR FRØM SURFACE *6PIPE19PIPE1* TØ SURFACE *1PLA13      * = 0.09662

THE FØLLØWING ARE THE (FINAL) SURFACE CØØRDINATES USED FØR THE FACTØR CØMPUTATIØN-


***** DATA NAME- *1PLA13      *

PØINT        X              Y              Z              PØINT        X              Y              Z
       0.0000000E-38  0.0000000E-38  0.1000000E 01---(INTERNALLY GENERATED ØRIENTATIØN VECTØR)
   1   0.0000000E-38  0.0000000E-38  0.0000000E-38        2   0.6000000E 01  0.0000000E-38  0.0000000E-38
   3   0.6000000E 01  0.6000000E 01  0.0000000E-38        4   0.0000000E-38  0.6000000E 01  0.0000000E-38
```

Figure 35. Group F Sample Problems Program Results (Sheet 15 of 24)

```
***** DATA NAME- *6PIPE19PIPE1*

POINT        X              Y              Z              POINT        X              Y              Z
   1  -0.1000000E 01  0.3000000E 01  0.5000000E 01          2   0.8000000E 01  0.3000000E 01  0.5000000E 01
   3  -0.1000000E 01  0.3000000E 01  0.3000000E 01          4   0.8000000E 01  0.3000000E 01  0.3000000E 01
   5  -0.1000000E 01  0.5000000E 01  0.3000000E 01          6   0.8000000E 01  0.5000000E 01  0.3000000E 01
   7  -0.1000000E 01  0.5000000E 01  0.5000000E 01          8   0.8000000E 01  0.5000000E 01  0.5000000E 01

POINT  CONNECTING POINTS    POINT  CONNECTING POINTS    POINT  CONNECTING POINTS    POINT  CONNECTING POINTS
   1      3,  2,  7,  0       2      4,  0,  8,  1        3      5,  4,  1,  0        4      6,  0,  2,  3
   5      7,  6,  3,  0       6      8,  0,  4,  5        7      1,  8,  5,  0        8      2,  0,  6,  7

COORDINATES OF POINTS ON BOUNDARY OF SURF    *1PLA13      * FOR EACH Y INTERVAL

      X-LEFT          X-RIGHT          Y                      X-LEFT          X-RIGHT          Y

  0.0000000E-38  0.6000000E 01  0.0000000E-38            0.0000000E-38  0.6000000E 01  0.1000000E 01
  0.0000000E-38  0.6000000E 01  0.2000000E 01            0.0000000E-38  0.6000000E 01  0.3000000E 01
  0.0000000E-38  0.6000000E 01  0.4000000E 01            0.0000000E-38  0.6000000E 01  0.5000000E 01
  0.0000000E-38  0.6000000E 01  0.6000000E 01

NO. OF HORIZONTAL INCREMENTS=  6  NO. OF VERTICAL INCREMENTS=  6

THE FOLLOWING ARE PLANE POINT CONFIGURATION FACTORS COMPUTED FOR THIS RUN
LOWEST GRID LINE FIRST, FROM X-LEFT TO X-RIGHT.

  0.1016907E 00   0.1182164E 00   0.1292339E 00   0.1345966E 00   0.1345966E 00   0.1292339E 00
  0.1182164E 00
  0.1333197E 00   0.1567490E 00   0.1714910E 00   0.1783416E 00   0.1783416E 00   0.1714910E 00
  0.1567490E 00
  0.1663360E 00   0.1971616E 00   0.2151488E 00   0.2230397E 00   0.2230397E 00   0.2151488E 00
  0.1971616E 00
  0.1878273E 00   0.2236738E 00   0.2429937E 00   0.2509736E 00   0.2509736E 00   0.2429937E 00
  0.2236738E 00
  0.2166066E 00   0.2581372E 00   0.2799282E 00   0.2887510E 00   0.2887510E 00   0.2799282E 00
  0.2581372E 00
  0.1878273E 00   0.2236738E 00   0.2429937E 00   0.2509736E 00   0.2509736E 00   0.2429937E 00
  0.2236738E 00
  0.1663360E 00   0.1971616E 00   0.2151488E 00   0.2230397E 00   0.2230397E 00   0.2151488E 00
  0.1971616E 00
```

Figure 35. Group F Sample Problems Program Results (Sheet 16 of 24)

```
NAA CONFAC II REPORT SAMPLE PROBLEMS GROUP F    K.A.TOUPS,7/31/65

RUN NO.    5    DATA USED FOR THIS RUN- *1PLA12*5COPLA*
                                         *      *      *
                                         *      *      *

MAPPING      SURFACE 2 SILHOUETTE COMPUTED FROM MAPPING POINT SHOWN
LINE PT
  1   1        1   2   3   4   1
  1   2        1   2   3   4   1
  1   3        1   2   3   4   1
  1   4        1   2   3   4   1
  1   5        1   2   3   4   1
  1   6        1   2   3   4   1
  1   7        1   2   3   4   1
  2   1        1   2   3   4   1
  2   2        1   2   3   4   1
  2   3        1   2   3   4   1
  2   4        1   2   3   4   1
  2   5        1   2   3   4   1
  2   6        1   2   3   4   1
  2   7        1   2   3   4   1
  3   1        1   2   3   4   1
  3   2        1   2   3   4   1
  3   3        1   2   3   4   1
  3   4        1   2   3   4   1
  3   5        1   2   3   4   1
  3   6        1   2   3   4   1
  3   7        1   2   3   4   1
  4   1        1   2   3   4   1
  4   2        1   2   3   4   1
  4   3        1   2   3   4   1
  4   4        1   2   3   4   1
  4   5        1   2   3   4   1
  4   6        1   2   3   4   1
  4   7        1   2   3   4   1
  5   1        1   2   3   4   1
  5   2        1   2   3   4   1
  5   3        1   2   3   4   1
  5   4        1   2   3   4   1
```

Figure 35. Group F Sample Problems Program Results (Sheet 17 of 24)

```
 5   5      1   2   3   4   1
 5   6      1   2   3   4   1
 5   7      1   2   3   4   1
 6   1      1   2   3   4   1
 6   2      1   2   3   4   1
 6   3      1   2   3   4   1
 6   4      1   2   3   4   1
 6   5      1   2   3   4   1
 6   6      1   2   3   4   1
 6   7      1   2   3   4   1
 7   1      1   2   3   4   1
 7   2      1   2   3   4   1
 7   3      1   2   3   4   1
 7   4      1   2   3   4   1
 7   5      1   2   3   4   1
 7   6      1   2   3   4   1
 7   7      1   2   3   4   1

THE FORM FACTOR FROM SURFACE *1PLA12      * TO SURFACE *5COPLA      * = 0.07183

THE EXCHANGE COEFFICIENT (FA)=   0.16831E 01 SQ UNITS

                  THE MAPPING AREA = 0.2343075E 02 SQ UNITS

THE AREA OF SURFACE *1PLA12      * = 0.2343075E 02 SQ UNITS.

THE FOLLOWING ARE THE (FINAL) SURFACE COORDINATES USED FOR THE FACTOR COMPUTATION-


***** DATA NAME- *1PLA12      *

POINT       X              Y              Z            POINT       X              Y              Z
       0.0000000E-38  0.0000000E-38  0.1000000E 01---(INTERNALLY GENERATED ORIENTATION VECTOR)
   1   0.0000000E-38  0.0000000E-38 -0.0000000E-38       2   0.6000000E 01  0.0000000E-38 -0.0000000E-38
   3   0.6000000E 01  0.3905125E 01  0.0000000E-38       4   0.0000000E-38  0.3905125E 01  0.0000000E-38


***** DATA NAME- *5COPLA      *

POINT       X              Y              Z            POINT       X              Y              Z
```

Figure 35. Group F Sample Problems Program Results (Sheet 18 of 24)

```
  1   0.2000000E 01 -0.1536443E 01  0.9090619E 01      2   0.7000000E 01 -0.1536443E 01  0.9090619E 01
  3   0.7000000E 01  0.2304664E 01  0.5889697E 01      4   0.2000000E 01  0.2304664E 01  0.5889697E 01
  5   0.3000000E 01  0.5121469E 00  0.9986877E 01      6   0.8000000E 01  0.5121469E 00  0.9986877E 01
  7   0.8000000E 01  0.4353254E 01  0.6785955E 01      8   0.3000000E 01  0.4353254E 01  0.6785955E 01

POINT  CONNECTING POINTS   POINT  CONNECTING POINTS   POINT  CONNECTING POINTS   POINT  CONNECTING POINTS
  1      2,  4,  0,  0      2      1,  3,  0,  0       3      2,  4,  0,  0       4      1,  3,  0,  0
  5      6,  8,  0,  0      6      5,  7,  0,  0       7      6,  8,  0,  0       8      5,  7,  0,  0

COORDINATES OF POINTS ON BOUNDARY OF SURF    *1PLA12      * FOR EACH Y INTERVAL

     X-LEFT          X-RIGHT          Y                     X-LEFT          X-RIGHT          Y

0.0000000E-38  0.6000000E 01  0.0000000E-38          0.0000000E-38  0.6000000E 01  0.6508542E 00
0.0000000E-38  0.6000000E 01  0.1301708E 01          0.0000000E-38  0.6000000E 01  0.1952563E 01
0.0000000E-38  0.6000000E 01  0.2603417E 01          0.0000000E-38  0.6000000E 01  0.3254271E 01
0.0000000E-38  0.6000000E 01  0.3905125E 01

NO. OF HORIZONTAL INCREMENTS=  6  NO. OF VERTICAL INCREMENTS=  6

THE FOLLOWING ARE PLANE POINT CONFIGURATION FACTORS COMPUTED FOR THIS RUN
LOWEST GRID LINE FIRST, FROM X-LEFT TO X-RIGHT.

0.6225369E-01  0.7617840E-01  0.8955294E-01  0.1002429E 00  0.1062080E 00  0.1062080E 00
0.1002429E 00
0.5906076E-01  0.7255809E-01  0.8559458E-01  0.9605521E-01  0.1019049E 00  0.1019049E 00
0.9605521E-01
0.5448929E-01  0.6706436E-01  0.7924927E-01  0.8904876E-01  0.9453532E-01  0.9453532E-01
0.8904876E-01
0.4880654E-01  0.6003462E-01  0.7091929E-01  0.7967614E-01  0.8457973E-01  0.8457973E-01
0.7967614E-01
0.4239698E-01  0.5198821E-01  0.6126251E-01  0.6871102E-01  0.7287802E-01  0.7287802E-01
0.6871102E-01
0.3569960E-01  0.4353447E-01  0.5106894E-01  0.5709737E-01  0.6046293E-01  0.6046293E-01
0.5709737E-01
0.2913310E-01  0.3525770E-01  0.4109973E-01  0.4574765E-01  0.4833436E-01  0.4833436E-01
0.4574765E-01
```

Figure 35. Group F Sample Problems Program Results (Sheet 19 of 24)

NAA CONFAC II REPORT SAMPLE PROBLEMS GROUP F K.A.TOUPS,7/31/65

RUN NO. 6 DATA USED FOR THIS RUN- *1PLA12*8COPLA*
*
*

MAPPING SURFACE 2 SILHOUETTE COMPUTED FROM MAPPING POINT SHOWN

LINE	PT									
1	1	1	2	3	9	7	8	10	4	1
1	2	1	2	3	9	7	8	10	4	1
1	3	1	2	3	9	7	8	10	4	1
1	4	1	2	3	9	7	8	10	4	1
1	5	1	2	9	3	7	8	10	4	1
1	6	1	2	9	6	7	8	10	4	1
1	7	1	2	9	6	7	8	10	4	1
2	1	1	2	3	9	7	8	10	4	1
2	2	1	2	3	9	7	8	10	4	1
2	3	1	2	3	9	7	8	10	4	1
2	4	1	2	3	9	7	8	10	4	1
2	5	1	2	3	9	7	8	10	4	1
2	6	1	2	9	6	7	8	10	4	1
2	7	1	2	9	6	7	8	10	4	1
3	1	1	2	3	9	7	8	10	4	1
3	2	1	2	3	9	7	8	10	4	1
3	3	1	2	3	9	7	8	10	4	1
3	4	1	2	3	9	7	8	10	4	1
3	5	1	2	3	9	7	8	10	4	1
3	6	1	2	9	6	7	8	10	4	1
3	7	1	2	9	6	7	8	10	4	1
4	1	1	2	3	9	7	8	10	4	1
4	2	1	2	3	9	7	8	10	4	1
4	3	1	2	3	9	7	8	10	4	1
4	4	1	2	3	9	7	8	10	4	1
4	5	1	2	3	9	7	8	10	4	1
4	6	1	2	9	6	7	8	10	4	1
4	7	1	2	9	6	7	8	10	4	1
5	1	1	2	3	9	7	8	10	4	1
5	2	1	2	3	9	7	8	10	4	1
5	3	1	2	3	9	7	8	10	4	1
5	4	1	2	3	9	7	8	10	4	1

Figure 35. Group F Sample Problems Program Results (Sheet 20 of 24)

```
 5   5     1   2   3   9   7   8  10   4   1
 5   6     1   2   9   6   7   8  10   4   1
 5   7     1   2   9   6   7   8  10   4   1
 6   1     1   2   3   9   7   8   5  10   1
 6   2     1   2   3   9   7   8  10   4   1
 6   3     1   2   3   9   7   8  10   4   1
 6   4     1   2   3   9   7   8  10   4   1
 6   5     1   2   3   9   7   8  10   4   1
 6   6     1   2   3   9   7   8  10   4   1
 6   7     1   2   9   6   7   8  10   4   1
 7   1     1   2   3   9   7   8   5  10   1
 7   2     1   2   3   9   7   8  10   4   1
 7   3     1   2   3   9   7   8  10   4   1
 7   4     1   2   3   9   7   8  10   4   1
 7   5     1   2   3   9   7   8  10   4   1
 7   6     1   2   3   9   7   8  10   4   1
 7   7     1   2   9   6   7   8  10   4   1

THE FØRM FACTØR FRØM SURFACE *1PLA12      * TØ SURFACE *8CØPLA      * = 0.11370

THE EXCHANGE CØEFFICIENT (FA)=   0.26641E 01 SQ UNITS

                 THE MAPPING AREA = 0.2343075E 02 SQ UNITS

THE AREA ØF SURFACE *1PLA12      * = 0.2343075E 02 SQ UNITS.

THE FØLLØWING ARE THE (FINAL) SURFACE CØØRDINATES USED FØR THE FACTØR CØMPUTATIØN-


***** DATA NAME- *1PLA12      *

PØINT       X              Y              Z              PØINT       X              Y              Z
       0.0000000E-38  0.0000000E-38  0.1000000E 01---(INTERNALLY GENERATED ØRIENTATIØN VECTØR)
   1   0.0000000E-38  0.0000000E-38 -0.0000000E-38       2   0.6000000E 01  0.0000000E-38 -0.0000000E-38
   3   0.6000000E 01  0.3905125E 01  0.0000000E-38       4   0.0000000E-38  0.3905125E 01  0.0000000E-38


***** DATA NAME- *8CØPLA      *

PØINT       X              Y              Z              PØINT       X              Y              Z
```

Figure 35. Group F Sample Problems Program Results (Sheet 21 of 24)

```
  1   0.2000000E 01 -0.1536443E 01  0.9090619E 01      2   0.7000000E 01 -0.1536443E 01  0.9090619E 01
  3   0.7000000E 01  0.2304664E 01  0.5889697E 01      4   0.2000000E 01  0.2304664E 01  0.5889697E 01
  5   0.3000000E 01  0.5121469E 00  0.9986877E 01      6   0.8000000E 01  0.5121469E 00  0.9986877E 01
  7   0.8000000E 01  0.4353254E 01  0.6785955E 01      8   0.3000000E 01  0.4353254E 01  0.6785955E 01

POINT  CONNECTING POINTS   POINT  CONNECTING POINTS   POINT  CONNECTING POINTS   POINT  CONNECTING POINTS
  1      4,  2,  0,  0      2      1,  3,  0,  0       3      2,  4,  0,  0       4      3,  1,  0,  0
  5      8,  6,  0,  0      6      5,  7,  0,  0       7      6,  8,  0,  0       8      7,  5,  0,  0

COORDINATES OF POINTS ON BOUNDARY OF SURF    *1PLA12      * FOR EACH Y INTERVAL

     X-LEFT          X-RIGHT          Y                     X-LEFT          X-RIGHT          Y

 0.0000000E-38   0.6000000E 01   0.0000000E-38          0.0000000E-38   0.6000000E 01   0.6508542E 00
 0.0000000E-38   0.6000000E 01   0.1301708E 01          0.0000000E-38   0.6000000E 01   0.1952563E 01
 0.0000000E-38   0.6000000E 01   0.2603417E 01          0.0000000E-38   0.6000000E 01   0.3254271E 01
 0.0000000E-38   0.6000000E 01   0.3905125E 01

NO. OF HORIZONTAL INCREMENTS=  6  NO. OF VERTICAL INCREMENTS=  6

THE FOLLOWING ARE PLANE POINT CONFIGURATION FACTORS COMPUTED FOR THIS RUN
LOWEST GRID LINE FIRST, FROM X-LEFT TO X-RIGHT.

 0.7900623E-01   0.9659111E-01   0.1137422E 00   0.1279164E 00   0.1365869E 00   0.1411071E 00
 0.1389489E 00
 0.7889844E-01   0.9693566E-01   0.1147063E 00   0.1295729E 00   0.1388653E 00   0.1431085E 00
 0.1409218E 00
 0.7744473E-01   0.9545729E-01   0.1133596E 00   0.1285168E 00   0.1382106E 00   0.1421491E 00
 0.1400179E 00
 0.7468201E-01   0.9216650E-01   0.1096655E 00   0.1246486E 00   0.1344574E 00   0.1380883E 00
 0.1360796E 00
 0.7073402E-01   0.8721161E-01   0.1037816E 00   0.1181107E 00   0.1277059E 00   0.1310465E 00
 0.1291940E 00
 0.6585748E-01   0.8086125E-01   0.9604551E-01   0.1092817E 00   0.1183301E 00   0.1214768E 00
 0.1197108E 00
 0.6033579E-01   0.7346887E-01   0.8692716E-01   0.9872500E-01   0.1069347E 00   0.1100436E 00
 0.1082155E 00
```

Figure 35. Group F Sample Problems Program Results (Sheet 22 of 24)

```
NAA CONFAC II REPORT SAMPLE PROBLEMS GROUP F   K.A.TOUPS,7/31/65

RUN NO.   7   DATA USED FOR THIS RUN- *1PLA12*1PLA9 *
                                      *      *9R    *
                                      *      *      *

THE FORM FACTOR FROM SURFACE *1PLA12      * TO SURFACE *1PLA9 9R    * = 0.07183

THE EXCHANGE COEFFICIENT (FA)=   0.16831E 01 SQ UNITS

                THE MAPPING AREA = 0.2343075E 02 SQ UNITS

THE AREA OF SURFACE *1PLA12      * = 0.2343075E 02 SQ UNITS.

THE AREA OF SURFACE *1PLA9 9R    * = 0.2500000E 02 SQ UNITS.

THE FORM FACTOR FROM SURFACE *1PLA9 9R    * TO SURFACE *1PLA12      * = 0.06733

THE FOLLOWING ARE THE (FINAL) SURFACE COORDINATES USED FOR THE FACTOR COMPUTATION-


***** DATA NAME- *1PLA12      *

POINT       X              Y              Z            POINT       X              Y              Z
      0.0000000E-38  0.0000000E-38  0.1000000E 01---(INTERNALLY GENERATED ORIENTATION VECTOR)
   1  0.0000000E-38  0.0000000E-38 -0.0000000E-38       2   0.6000000E 01  0.0000000E-38 -0.0000000E-38
   3  0.6000000E 01  0.3905125E 01  0.0000000E-38       4   0.0000000E-38  0.3905125E 01  0.0000000E-38


***** DATA NAME- *1PLA9 9R    *

POINT       X              Y              Z            POINT       X              Y              Z
      0.2000000E 01 -0.2176628E 01  0.8322398E 01---(INTERNALLY GENERATED ORIENTATION VECTOR)
   1  0.2000000E 01 -0.1536443E 01  0.9090619E 01       2   0.2000000E 01  0.2304664E 01  0.5889697E 01
   3  0.7000000E 01  0.2304664E 01  0.5889697E 01       4   0.7000000E 01 -0.1536443E 01  0.9090619E 01

COORDINATES OF POINTS ON BOUNDARY OF SURF    *1PLA12      * FOR EACH Y INTERVAL
```

Figure 35. Group F Sample Problems Program Results (Sheet 23 of 24)

X-LEFT	X-RIGHT	Y	X-LEFT	X-RIGHT	Y
0.0000000E-38	0.6000000E 01	0.0000000E-38	0.0000000E-38	0.6000000E 01	0.6508542E 00
0.0000000E-38	0.6000000E 01	0.1301708E 01	0.0000000E-38	0.6000000E 01	0.1952563E 01
0.0000000E-38	0.6000000E 01	0.2603417E 01	0.0000000E-38	0.6000000E 01	0.3254271E 01
0.0000000E-38	0.6000000E 01	0.3905125E 01			

NO. OF HORIZONTAL INCREMENTS= 6 NO. OF VERTICAL INCREMENTS= 6

THE FOLLOWING ARE PLANE POINT CONFIGURATION FACTORS COMPUTED FOR THIS RUN
LOWEST GRID LINE FIRST, FROM X-LEFT TO X-RIGHT.

0.6225369E-01	0.7617840E-01	0.8955295E-01	0.1002429E 00	0.1062080E 00	0.1062080E 00
0.1002429E 00					
0.5906076E-01	0.7255809E-01	0.8559458E-01	0.9605521E-01	0.1019049E 00	0.1019049E 00
0.9605521E-01					
0.5448929E-01	0.6706436E-01	0.7924927E-01	0.8904876E-01	0.9453532E-01	0.9453532E-01
0.8904876E-01					
0.4880654E-01	0.6003462E-01	0.7091929E-01	0.7967614E-01	0.8457973E-01	0.8457973E-01
0.7967614E-01					
0.4239699E-01	0.5198821E-01	0.6126251E-01	0.6871102E-01	0.7287802E-01	0.7287802E-01
0.6871102E-01					
0.3569960E-01	0.4353447E-01	0.5106894E-01	0.5709737E-01	0.6046293E-01	0.6046293E-01
0.5709737E-01					
0.2913310E-01	0.3525771E-01	0.4109974E-01	0.4574765E-01	0.4833437E-01	0.4833437E-01
0.4574765E-01					

Figure 35. Group F Sample Problems Program Results (Sheet 24 of 24)

APPENDIX B. PROGRAM DECK SETUP, LISTINGS, AND MAPS

The program deck arrangement shown in Figure 36 contains a main program and seven subprograms which are listed in this appendix. A listing of the main program, 7J380, is shown in Figure 37 followed by a map of the core storage locations in Figure 38.

The first subprogram, block data DCODZ, is given in Figure 39 and storage map in Figure 40. Subroutine UNIVEC is shown in Figure 41 and the storage map in Figure 42. Subroutine DATA is shown in Figure 43 and its storage map in Figure 44.

The transformation subroutine, TXFRM, is presented in Figure 45 and the map of core storage in Figure 46. The listing and map of subroutine DOICU is presented in Figures 47 and 48. The listing and map of subroutine MAP, is presented in Figures 49 and 50. The listing of the subroutine FACTOR is presented in Figure 51 and the map of core storage in Figure 52. Subroutine SILFAC listing and core storage is given in Figures 53 and 54. Figure 55 shows the variable formats used by this program.

This IBM FORTRAN IV computer program utilizes Fortran input tape 5 and output tape 6 for input/output data transmission when operating in the North American version of IBM IBSYS (NAA SYS). Logical tape 3 is also required when card images are requested.

Those facilities operating under IBM IBSYS but utilizing different logical tape numbers may easily alter tape numbers by use of the IBSYS $NAME control card.

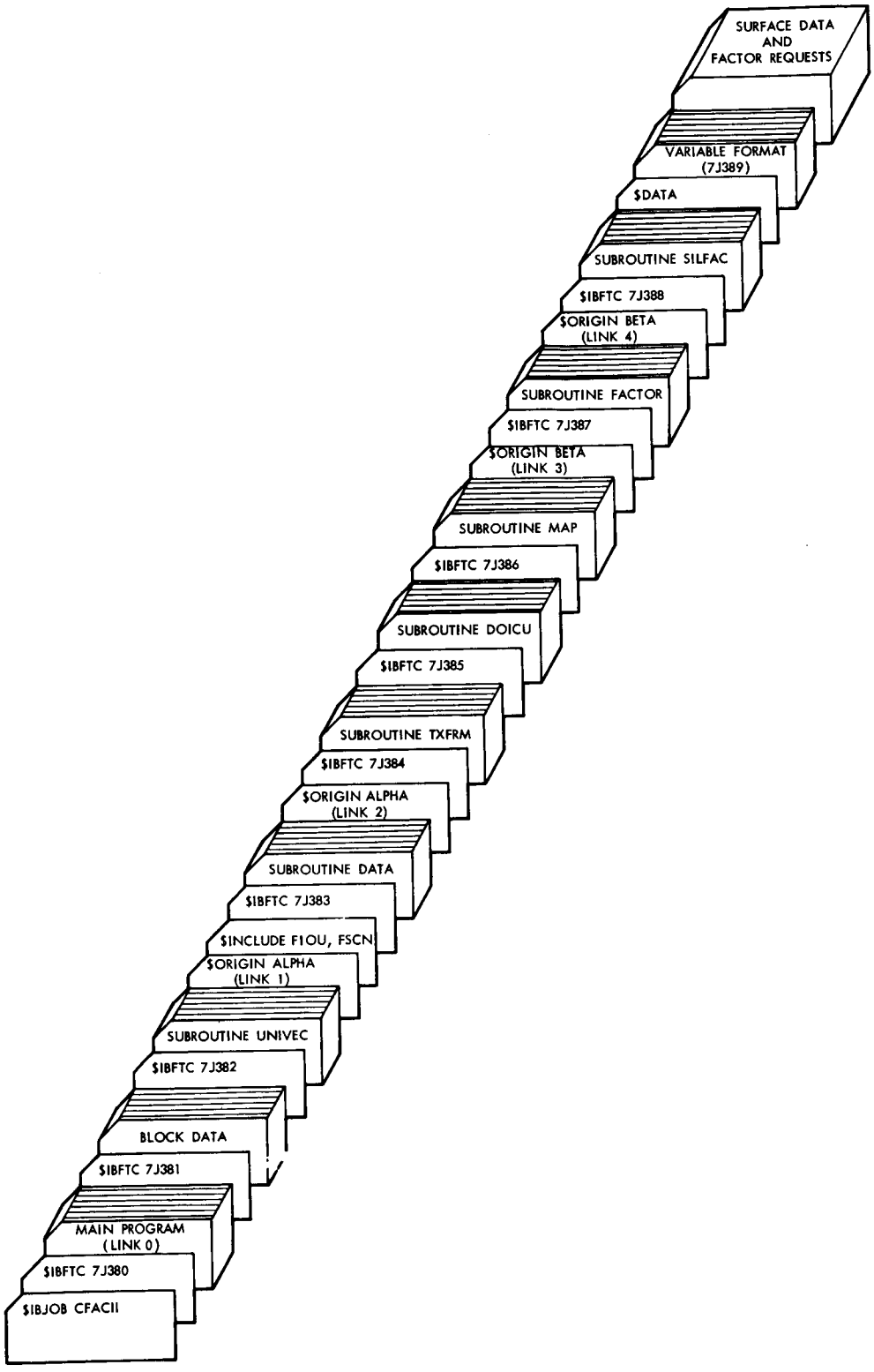

Figure 36. Program Deck Setup

```
      CFACII                                                          09/30/85                PAGE  1
          38007J     -  EFN   SCURCE STATEMENT  -  IFN(S)  -

C THERMAL ANALYSIS CONFAC PROGRAM-NASA CCNTRACT NAS9-4133                38000020
C CONFAC II,MAIN PROG-ANALYSIS AND PROG BY K.A.TOUPS,NAA SID, 1           38000030
C FCRTRAN IV VERSION 7/31/65                                              38000040
C THIS MAIN PROGRAM CONTROLS THE COMPUTATION OF CONFIGURATION AND FORM    38000050
C FACTORS BETWEEN SURFACES EXCHANGING RADIANT FLUX(HEAT OR ILLUMINATION)38000060
C FORTRAN SUBROUTINES REQD ARE UNIVEC,TXFRM,DOICU,MAP,FACTOR, AND SILFAC38000070
C LIBRARY FUNCTICNS USED ARE SIN,COS,AND SQRT                             38000080
C SEE NAA SPACE AND INFORMATICN SYSTEMS REPORT SID 65-1043-2 FOR DETAILS38000090
C OF PROGRAM STRUCTURE AND USE.                                           38000100
      DIMENSION  P(3,102,21),KD(4,10 ),NNN(100,2),FX(10),TDN(12),NDC(10)38000110
     1,NDN(12),TDA(6),COM(732)                                            38000120
      DOUBLE PRECISION X,Y,SL,VA                                          38000130
      INTEGER SL1,SL2,SL3,SL4,SL5,S7                                      38000140
      COMMCN X(120),Y(12C),SL(4,100),VA(4,100),KC(53),AREA(53),NSN(53),  38000150
     1NSC(53),NDL(53),RX(11),RY(11),ZS(11),MP(4,102,11),PAF(11),CL(11),  38000160
     2DK(4,10),PT(3,4,1C),RA(1C),SP(3,10),NMS(12,12),                     38000170
     3MSNOS(12),X1(61,2),Y1(61),DX(61),FH(61),FV(61),PP(3,102,21),        38000180
     4BUF(3),NOP(53),NTITLE(12,2)  ,NCIM(14),AREAX(2),NDA(6),LD(6),       38000190
     5LP(2),LI(2),SL1,SL2,SL3,SL4,NC,S7,V(3),NDM(53),                     38000200
     6ND,KX,KP,NP,FAP,NHI,NHL,NVI,NVL,F,DY,AMAP,NDO,FHP(25,25),MN(100)    38000210
      COMMON FA(9),FB(1),FC(2),F1(24),F2(11),FD(1),F3(24),F4( 6),F5( 2),38000220
     1F6( 4),F7(12),F8(48),F9(24),F10(24),F11(12),F12(18),F13(6),         38000230
     2F14( 6),F15( 6),F16(12),F17(12),F18(14),F19(10),F20(24),F21(12),    38000240
     3F22(12),F23(12),F24(72),F25(12),F26(12),F26A(24),F27(24),F28(12),   38000250
     4F29( 60),F30( 24),F31( 36),F32( 12),F33( 24),F37( 12),              38000260
     5F38(12),F39(12),F4C(22),F34(2),F42(12)                              38000270
      CCMMCN/DCODZ/OCT(7),NCODZ(6),NCLS(9),INC(12),NBLNK,IS,J,KM,KS,I,    38000280
     1IC,DT,NEND,IM,IR                                                    38000290
      EQUIVALENCE (P,PP(4)),(KD,DK),(SL,NNN),(VA,C1),(VA(4,26),C2),       38000300
     1(VA(4,52),C3),(DT,NDT),(FX,F42(3)),(NSID,TNSID)                     38000310
     2,(NDN(3),NDC),(TDA,NDA),(FA,COM),(NDN,NCIM,TDN)                     38000320
C READ VARIABLE FORMAT DATA                                               38000330
      READ(5,1)COM                                                        38000340    1
1     FORMAT(12A6)                                                        38000350
      DO 1C M=1,24                                                        38000360
 1C   NTITLE(M,1)=NBLNK                                                   38000370
```

Figure 37. MAIN Program Listing (Sheet 1 of 12)

```
      IS=C                                                          38000380
      NTI=1                                                         38000390
      IM=C                                                          38000400
 90   SL5=C                                                         38000410
 100  IF(IM)4000,4100,4000                                          38000420
 4349 REWIND 3                                                      38000430   15
      WRITE(6,F1)                                                   38000440   16
      WRITE(6,FA)                                                   38000450   17
      GC TC 435C                                                    38000460
 425C READ(5,FB)NCIM                                                38000470   19
 435C WRITE(3,FB)NCIM                                               38000480   21
      WRITE(6,FC)NCIM                                               38000490   23
      IF(NEND-NCIM(1))4250,4450,4250                                38000500
 445C REWIND 3                                                      38000510   26
      IM=1                                                          38000520
C READ A CARD                                                       38000530
 4CCC READ(3,FB)NCIM                                                38000540   27
      GO TO 120                                                     38000550
 405C IM=C                                                          38000560
 41CC READ(5,FB)NCIM                                                38000570
C LIFT THE FIRST CHARACTER FROM THE FIRST WORD ON THE  CARD AND STORE IN38000580
C DT, LEFT ADJUSTED, REMAINDER FILLED WITH BLANKS.                  38000590   31
120   DT = OR(AND(TDN(1),OCT(1)) ,OCT(2))                           38000600
C TEST FOR ALPHA OR NUMERIC                                         38000610
      IF(NCLS(9)-IABS(NDT))121,425,425                              38000620
C TEST THE FIRST CHARACTER AGAINST ALPHA CODE                       38000630
121   DO 11C     K=1,5                                              38000640
      IF(NDT.EQ.NCODZ(K))GO TO (150,150,130,110,460),K              38000650
110   CONTINUE                                                      38000660
 420C IF(NEND-NDN(1))425 ,4C50,425                                  38000670
 130  IF(IM)149,4349,149                                            38000680
C BLANK THE FIRST CHARACTER FCR LATER PRINTOUT                      38000690
 149  K=1                                                           38000700
150   TDN(1)= OR(AND(TDN(1),COMPL(CCT(1))),OCT(4))                  38000710
C LCAD INTC TITLE ARRAY                                             38000720
      GO TC (198,199),K                                             38000730
 198  CO 5C M=1,12                                                  38000740
```

Figure 37. MAIN Program Listing (Sheet 2 of 12)

```
      CFACII                                                          09/30/85                PAGE  3
          38007J     -  EFN   SOURCE STATEMENT  -  IFN(S)  -

 50   NTITLE(M,2)=NBLNK                                                38000750
      NTI=1                                                            38000760
 199  DO 200   M=1,12                                                  38000770
200   NTITLE(M,K)=NDN(M)                                               38000780
      GO TO 100                                                        38000790
C TEST THE SECOND WORD-IF BLANK,THIS IS A NAME CARD.IF NOT BLANK,THIS IS38000800
C THE FIRST CARD IN RUN INSTRUCTIONS                                   38000810
425   IF(NDN(2)-NBLNK)5000 ,450  ,5000                                 38000820
 450  IF(NTI)452,455,452                                               38000830
452   NTI=0                                                            38000840
      NDI=0                                                            38000850
C INITIALIZE PROGRAM VARIABLES                                         38000860
C PRINT PROGRAM HEADING                                                38000870
80    WRITE( 6,F1)                                                     38000880
C INITIALIZE BAD INSTRUCTIONS COUNT                                    38000890    77
      NB=0                                                             38000900
C INITIALIZE DATA COUNT VARIABLES                                      38000910
C TXFRM DATA COUNT                                                     38000920
      J=0                                                              38000930
C MULTISURFACE DATA COUNT                                              38000940
      KM=0                                                             38000950
C SPHERE  DATA COUNT                                                   38000960
      KS=0                                                             38000970
C PLANAR AND NONPLANAR SURFACE DATA COUNT                              38000980
      I=4                                                              38000990
C        SURFACE SILHOUETTE CONNECTIONS DATA COUNT                     38001000
      IC=1                                                             38001010
C RUN NO COUNT                                                         38001020
      NR=0                                                             38001030
C NAME OF DATA(NSN),DATA CLASS(NSC),SURFACE AREA(AREA),XREF ARRAYS,COUNT38001040
      IS=0                                                             38001050
C INITIALIZE PRINTOUT FLAG- IF 0, STANDARD PRINTOUT RESULTS. IF NONZERO,38001060
C A DETAILED PRINTOUT RESULTS.                                         38001070
      NDC=0                                                            38001080
      LD(5)=4                                                          38001090
      LD(6)=4                                                          38001100
      GO TO 457                                                        38001110
```

Figure 37. MAIN Program Listing (Sheet 3 of 12)

```
C PRINT DATA HEADING,TITLE,COMMENT,IF ANY                          38001120
 455  IF(NDI)456,458,456                                           38001130
 456  NDI=0                                                        38001140
      WRITE(6,FD)                                                  38001150   91
 457  WRITE( 6,F2)NTITLE                                           38001160   92
 458  CALL DATA                                                    38001170   95
      GO TO 100                                                    38001180
 460  SL5=1                                                        38001190
C INTERPRET RUN INSTRUCTIONS-2 RUNS PER CARD                       38001200
 500C NDI=1                                                        38001210
      DO 8200 NZ=1,7,6                                             38001220
C CREATE FACTOR REQUESTS FOR COMBINATION  RUN                      38001230
      IF(SL5)5035,5050,5035                                        38001240
 5035 WRITE(6,F20)NTITLE,NR,(NDN(M),M=1,6)                         38001250   104
      N1=1                                                         38001260
      N2=2                                                         38001270
      NDN(1)=NSN(1)                                                38001280
      NDN(2)=NSN(2)                                                38001290
      GO TO 5050                                                   38001300
 5040 N1=N1+1                                                      38001310
      IF(N1-IS)5041,8090,8090                                      38001320
 5041 NDA(1)=NSN(N1)                                               38001330
      LD(1)=N1                                                     38001340
      N2=N1                                                        38001350
 5042 N2=N2+1                                                      38001360
      IF(N2-IS) 5043,5043,5040                                     38001370
 5043 NDA(2)=NSN(N2)                                               38001380
      LD(2)=N2                                                     38001390
      NR=NR+1                                                      38001400
      GO TO 5702                                                   38001410
 5050  DO 5100  N=1,6                                              38001420
      NS=NZ+N-1                                                    38001430
 5100  NDA(N)=NDN(NS)                                              38001440
CIF FIRST WORD IS BLANK,ASSUME ALL ARE AND GO TO NEXT SET          38001450
      IF(NDA(1)-NBLNK)5150 ,8100 ,5150                             38001460
C COUNT RUNS                                                       38001470
 5150  NR=NR+1                                                    38001480
```

Figure 37. MAIN Program Listing (Sheet 4 of 12)

```
      DO 5700  N=1,6                                                    38001490
C COMPARE RUN DATA WITH NAMES IN DICTIONARY                             38001500
      IF(NDA(N)-NBLNK)5250 ,5200 ,5250                                  38001510
5200  IF(N-2)5705 ,5705 ,5210                                           38001520
C IF NO INCREMENT NO IS SPECIFIED,USE THE SAME AS LAST RUN(INITIALIZED  38001530
C BY TITLE CARD AT 4)                                                   38001540
5210  IF(N-4)5220 ,5220 ,5700                                           38001550
C IF NO TXFRM IS SPECIFIED, LOAD 0 FOR LOCATION.                        38001560
5220  LD(N)=0                                                           38001570
      GO TO 5700                                                        38001580
5250  IF(N-4)5270 ,5270 ,5320                                           38001590
5270  DO 5300  K=1,IS                                                   38001600
      IF(NDA(N)-NSN(K))5300 ,5600 ,5300                                 38001610
5300  CONTINUE                                                          38001620
C FLOW TO THIS POINT INDICATES THE WORD IS NOT IN DICTIONARY-PRINT ERROR38001630
C CHECK FOR ORIENTATION VECTOR REVERSAL CODE                            38001640
      IF(NDA(N)-IR)5705,5301,5705                                       38001650
 5301 LD(N)=-1                                                          38001660
      GO TO 5700                                                        38001670
5320  DT = OR(AND(TDA(N),OCT(5)),OCT(6))                                38001680
      IF(NDT-NBLNK)5340 ,5350,5340                                      38001690
 5340 NDC=0                                                             38001700
      IF(NDT.EQ.NCODZ(6))NDC=1                                          38001710
5350  DT = OR(AND(TDA(N),COMPL(OCT(5))),OCT(7))                         38001720
      IF(NDT-NBLNK)5360 ,5700 ,5360                                     38001730
5360  DO 5420   K=1,12                                                  38001740
5400  IF(NDT-INC(K))5420 ,5600 ,5420                                    38001750
5420  CONTINUE                                                          38001760
C FLOW TO THIS POINT INDICATES THE WORD IS NOT IN DICTIONARY-PRINT ERROR38001770
      GO TO 5705                                                        38001780
C PLACE LOCATION OF NAME IN DICTIONARY IN ARRAY LD                      38001790
5600  LD(N)=K                                                           38001800
5700  CONTINUE                                                          38001810
      N1=LD(1)                                                          38001820
      N2=LD(2)                                                          38001830
 5702 IF(NSC(N2))5706,5705,5706                                         38001840
C COUNT SUCCESSIVE NO OF TIMES THIS HAPPENS- IF MORE THAN 10, SUPPRESS  38001850
```

Figure 37. MAIN Program Listing (Sheet 5 of 12)

```
C PRINTED OUTPUT                                                        38001860
5705  NB=NB+1                                                           38001870
      IF(NB-11)5710 ,5730 ,8100                                         38001880
5706  NB=0                                                              38001890
C PRINT OUTPUT GENERAL HEADING                                          38001900
5710  WRITE( 6,F20)              NTITLE,NR,NDA                          38001910   191
      IF(NB)5720 ,5740 ,5720                                            38001920
5720  IF(NSC(N2))5725,5721,5725                                         38001930
5721  N2=NDL(N2)                                                        38001940
5722  WRITE( 6,F11)              (NMS(M,N2),M=1,12)                     38001950   200
5725  WRITE( 6,F18)                                                     38001960   205
      GO TO 8100                                                        38001970
5730  WRITE( 6,F19)                                                     38001980   207
      GO TO 8100                                                        38001990
C VERIFY SURFACE 1 IS CLASSED AS A PLANE                                38002000
5740  IF(NSC(N1))5750 ,5750 ,5755                                       38002010
C PRINT ERROR                                                           38002020
5750  WRITE( 6,F21)                                                     38002030   212
      GO TO 8100                                                        38002040
C SET S7 TO 1 IF SURFACE 2 IS A SPHERE                                  38002050
5755  S7=0                                                              38002060
      IF(NSC(N2).EQ.-7)S7=1                                             38002070
C IF SURFACE 2 IS CLASS 8,LOCATE AND VERIFY DATA REQUESTED, TXFRM EACH  38002080
C SURFACE IF REQD AND ASSEMBLE. IF CLASS 9,PRINT DIAGNOSTIC             38002090
      IF(NSC(N2)+8)5706,9000,5760                                       38002100
C INTIALIZE TOTAL POINT NO COUNT.                                       38002110
9000  N=0                                                               38002120
C INITIALIZE POINT NO COUNT FOR COMPOSITE SURFACE                       38002130
      NOP(4)=0                                                          38002140
C INITIALIZE SURFACE COUNT FLAG                                         38002150
      NX=0                                                              38002160
C LOCATE MULTISURFACE NAMES                                             38002170
      N3=NDM(N2)                                                        38002180
      DO 9160    L=1,11,2                                               38002190
      IF(NMS(L,N3)-NBLNK)9150,9160,9150                                 38002200
9150  NX=NX+1                                                           38002210
      MSNOS(NX)= L                                                      38002220
```

Figure 37. MAIN Program Listing (Sheet 6 of 12)

```
      CFACII                                                          09/30/85                PAGE  7
          38007J     -  EFN   SCURCE STATEMENT  -  IFN(S)  -

9160  CCNTINUE                                                        38002230
      IF(NX)917C, 9165  ,9170                                         38002240
6160  WRITE( 6,F4)              NSN(N2),NBLNK                         38002250    236
      F12(10)=F10(10)                                                 38002260
      WRITE( 6,F12)                                                   38002270    238
9165  NSC(N2)=0                                                       38002280
      GO TC 5721                                                      38002290
C ASSUME PROGRAM WILL PRCCEED TO ASSEMBLE DATA INTO LOC 4 OF ARRAY P  38002300
9170  NDL(N2)=4                                                       38002310
C CCNNECTICNS WILL BE LCADED INTC LOCATICN 1 OF ARRAY MP              38002320
      KC(N2)=1                                                        38002330
      CC 12000   K=1,NX                                               38002340
      L=MSNOS(K)                                                      38002350
9200  DO 9400    M =1,IS                                              38002360
C LOCATE SURFACE NAME AND DATA                                        38002370
      IF(NMS(L,N3)-NSN(M))94CC,9300,9400                              38002380
C CCNFIRM THIS IS NOT ABOVE CLASS 6                                   38002390
9300  IF(IABS(NSC(M))-6)9350,9350,9165                                38002400
9350  ND=NDL(M)                                                       38002410
      LP(2)=ND                                                        38002420
      GO TC 9600                                                      38002430
940C  CCNTINUE                                                        38002440
      GO TO 9165                                                      38002450
C IF TXFRM DATA WORD IS NONBLANK AND ORIENTATION REVERSAL IS NOT      38002460
C REQUESTED, SEARCH DICTIONARY FOR LOCATION OF DATA AND CONFIRM CLASS 9 38002470
 96CC IF(NMS(L+1,N3).EQ.NBLNK.CR.NMS(L+1,N3).EQ.IR)GC TO 10250        38002480
970C  DO 10000   NC=1,IS                                              38002490
      IF(NMS(L+1,N3)-NSN(NC))100CC,9800,10000                         38002500
C CCNFIRM CLASS 9                                                     38002510
980C  IF(NSC(NC)+9) 9165,1C200,9165                                   38002520
10000 CONTINUE                                                        38002530
      GO TC 9165                                                      38002540
C SET SL4 FCR PRIMARY TXFRM                                           38002550
102CC SL4=1                                                           38002560
      KP=2                                                            38002570
      CALL TXFRM                                                      38002580
C THE TXFRMD DATA IS IN LCCATICN 2                                    38002590    284
```

Figure 37. MAIN Program Listing (Sheet 7 of 12)

```
      ND=2                                                              38002600
10250 SL1=0                                                             38002610
      NP=NOP(ND)                                                        38002620
C ASSEMBLE SURFACE AND CONNECTIONS DATA                                 38002630
      IK=KC(M)                                                          38002635
      IF(IABS(NSC(M))-4)10450,10300,10300                               38002640
10300 IF(NX-1)10400,10400,10500                                         38002650
10400 NDL(N2)=ND                                                        38002660
      SL1=-1                                                            38002670
      GO TO 10600                                                       38002680
C ASSEMBLE MULTISURFACE DATA INTO LOCATION 4 OF  P AND CONNECTIONS       38002690
C INTO 1 OF MP                                                          38002700
10450 SL1=1                                                             38002710
10500 NOP( 4)=NOP( 4)+NP                                                38002720
C CHECK POINT NO AGAINST LIMIT                                          38002730
      IF(NOP( 4) -101)10600,10600,6160                                  38002750
10600 NC=N                                                              38002760
      DO 11500   NF=1,NP                                                38002770
C UPDATE POINT NO COUNTER                                               38002780
      N=N+1                                                             38002790
      DO 10640  KK=1,4                                                  38002792
10640 MP(KK,N,1)=0                                                      38002794
      IF(SL1)10800,10650,10650                                          38002795
C LOAD SURFACE DATA                                                     38002800
10650  P(1,N,4) = P(1,NF,ND)                                            38002810
       P(2,N,4) = P(2,NF,ND)                                            38002820
       P(3,N,4) = P(3,NF,ND)                                            38002830
C LOAD CONNECTIONS DATA FOR CLASS 1,2 OR 3 SURFACES                     38002840
      IF(SL1)10700,10800,10700                                          38002850
10700 MP( 1,N,1)= N-1                                                   38002860
      MP(2 ,N,1)= N+1                                                   38002870
      MN(N)=2                                                           38002880
      GO TO 11500                                                       38002890
C LOAD  CONNECTIONS DATA FOR CLASSES 4,5,6                              38002900
10800 K2=0                                                              38002920
      DO 11000   KK=1,4                                                 38002930
      IF(MP(KK,NF,IK))10900,11000,10900                                 38002940
```

Figure 37. MAIN Program Listing (Sheet 8 of 12)

```
1090C K2=K2+1                                                    38002950
      MP(K2, N,1)=MP(KK,NF,IK)+NC                                38002960
11000C CONTINUE                                                  38002970
C LOAD TOTAL NO OF CONNECTIONS PER POINT                         38002980
      MN(N)=K2                                                   38002990
11500C CONTINUE                                                  38003000
11540 IF(SL1)5760 ,12000,11550                                   38003010
11550 MP(1,NO+1,1)=NO+NP                                         38003020
      MP(2,   N,1)=NO+1                                          38003030
12000C CONTINUE                                                  38003040
C TRANSFORM SURFACES AS INDICATED BY RUN DATA -                  38003050
5760  DO 6000    KP=1,2                                          38003060
C INITIALIZE BISECTED SURFACE AREA VALUE FOR PRINTOUT FLAG       38003070
      AREAX(KP)=0.                                               38003080
      SL4=0                                                      38003090
      KP2=KP+2                                                   38003100
C SELECT SUBSCRIPT OF DATA NAME                                  38003110
      IN=LD(KP)                                                  38003120
C LOCATE DATA SUBSCRIPT THROUGH CROSS REF ARRAY NDL              38003130
      ND=NDL(IN)                                                 38003140
C LP(KP) IS THE CURRENT LOCATION OF SURFACE KP DATA IN ARRAY P.  38003150
5950  LP(KP)=ND                                                  38003160
C SELECT TRANSFORMATION WORD CORRESPONDING TO SURFACE KP         38003170
C TEST FOR BLANK-MEANS NO TXFRM REQD- LOAD ND IN LP(KP) FOR NO TXFRM 38003180
C NEG SIGN MEANS ORIENTATION REVERSAL IS REQUESTED               38003190
      IF(LD(KP2))5770,6000,5800                                  38003200
C SET SL4 NEG FOR FLAG IN TXFRM                                  38003210
 5770 SL4=-1                                                     38003220
      GO TO 5940                                                 38003230
C IF THE WORD IN LOCATION KP+2 IS NOT BLANK, VERIFY PROPER CLASS--9. 38003240
5800  NC=LD(KP2)                                                 38003250
      IF(NSC(NC)+9)5850,5900 ,5850                               38003260
5850  WRITE( 6,F22)                                              38003270   368
      GO TO 8100                                                 38003280
C IF THE DATA CLASS IS NOT   7, TXFRM THE DATA. THE NEW LOCATION OF THE 38003290
C TXFRMD COORDINATES IS ESTABLISHED IN SUB TXFRM THROUGH ARRAY LP(KP) 38003300
5900  IF(NSC(IN)+7)5930,5920,5930                                38003310
```

Figure 37. MAIN Program Listing (Sheet 9 of 12)

NORTH AMERICAN AVIATION, INC.
SPACE and INFORMATION SYSTEMS DIVISION

```
5920  WRITE( 6,F23)                                                    38003320   373
      GO TO 8100                                                       38003330
5930  SL4=1                                                            38003340
 5940 CALL TXFRM                                                       38003350
C INITIALIZE BISECTION FLAGS                                            38003360   377
6000  LI(KP)=1                                                         38003370
      SL3=0                                                            38003380
C  SET SL3 FOR CLASSES 5,NONPLANE 6,7 AND 8 FOR PROCESSING BY SILFAC    38003390
C USE ALSO TO PREVENT BISECTION IN DOICU EXCEPTING CLASS 7              38003400
      IF((NSC(N2)+5).LE.0)SL3=1                                        38003410
C IF SURFACE 2 IS A SPHERE, TRANSFER SPHERE COORDINATES TO LOC 4 IN P   38003420
      IF(S7)6020,6200,6020                                             38003430
6020  P(1,1,4)=SP(1,ND)                                                38003440
      P(2,1,4)=SP(2,ND)                                                38003450
      P(3,1,4)=SP(3,ND)                                                38003460
      LP(2)=4                                                          38003470
      NOP(4)=1                                                         38003480
6200  CALL DOICU                                                       38003490
C IF THE SURFACES SEE NONE OF EACH OTHER, PRINT COMMENT AND PROCEED TO  38003500
C NEXT RUN. LI(1) IS SET TO 0 IN SUB DOICU TO FLAG THIS CONDITION.      38003510   391
6300  IF(LI(1))6700 ,6400 ,6700                                        38003520
6400  WRITE( 6,F24)              NDA(1),NDA(3),NDA(2),NDA(4)           38003530   394
      DO 6600    KP=1,2                                                38003540
      KP2=KP+2                                                         38003550
      IF(LD(KP2))6500 ,6600 ,6500                                      38003560
6500  JP=LP(KP)                                                        38003570
      NP=NCP(JP)                                                       38003580
      WRITE( 6,F25)              NDA(KP),NDA(KP2)                      38003590   404
      WRITE( 6,F14)                                                    38003600   407
      N2=LD(KP)                                                        38003610
      IF(NSC(N2).GT.0)WRITE(6,F16)(PP(M,1,JP),M=1,3)                   38003620   411
      WRITE( 6,F15)              (M,P(1,M,JP),P(2,M,JP),P(3,M,JP),M=1,NP)38003630   416
6600  CONTINUE                                                         38003640
C PROCEED TO NEXT RUN                                                   38003650
      GO TO 8100                                                       38003660
6700  CALL MAP                                                         38003670
C IF SURFACE 2 IS A SPHERE, DO NOT PRINT DETAILED SILHOUETTE HEADING    38003680   427
```

Figure 37. MAIN Program Listing (Sheet 10 of 12)

```
      IF(SL3)6720,6760,6720                                          38003690
6720  IF(S7.EQ.0.AND.NDC.NE.0)WRITE(6,F40)                           38003700   431
      CALL SILFAC                                                    38003710   433
      GO TO 6770                                                     38003720
6760  CALL FACTOR                                                    38003730   436
6770  WRITE( 6,F26)              NDA(1),NDA(3),NDA(2),NDA(4),F       38003740   437
      WRITE(6,F26A)FAP,AMAP                                          38003750
C PRINT OUTPUT INDICATING AREA OF EACH SURFACE SEEN, IF NOT ALL.     38003760   438
      DO 7000    KP=1,2                                              38003770
      J3=LD(KP)                                                      38003780
6780  KP2=KP+2                                                       38003790
      IF(LI(KP))6800 ,6840 ,6840                                     38003800
6800  J1=3-KP                                                        38003810
      J2=J1+2                                                        38003820
6810  WRITE( 6,FX)              NDA(KP),NDA(KP2),NDA(J1),NDA(J2)     38003830
C BISECTED SURFACE AREAS ARE COMPUTED ONLY FOR A PLANE SURF OR A SPHERE 38003840   448
      IF(AREAX(KP).NE.0.)WRITE(6,F27)AREAX(KP),AREA(J3)              38003850   454
      GO TO 7000                                                     38003860
6840  IF(AREA(J3).NE.0.)WRITE(6,F28)NDA(KP),NDA(KP2),AREA(J3)        38003870   461
7000  CONTINUE                                                       38003880
      IF(AREA(J3))7050,7100,7050                                     38003890
 7050 FR=FAP/AREA(J3)                                                38003900
      WRITE(6,F26)NDA(2),NDA(4),NDA(1),NDA(3),FR                     38003910
C DETERMINE WHETHER THE MAPPING AREA IS WITHIN TOLERANCE OF THE ACTUAL 38003920
C SURFACE AREA MAPPED(SURFACE 1)                                     38003930
C IF SURFACE 1 WAS BISECTED, USE MODIFIED SURFACE-                   38003940   472
 7100 IF(LI(1).GT.0)AREAX(1)=AREA(N1)                                38003950
C PRINT WARNING IF INDICATED                                         38003960
      IF(ABS(AMAP-AREAX(1)).GT..01*AREAX(1))WRITE(6,F29)(NDA(K),K=1,4) 38003970
C IF A DETAILED OUTPUT WAS NOT REQUESTED,PROCEED TO NEXT RUN         38003980   477
7350  IF(NDO)7400 ,8100  ,7400                                       38003990
7400  WRITE( 6,F30)                                                  38004000   485
      DO 7900 KP=1,2                                                 38004010
      IN=LD(KP)                                                      38004020
7600  ND=LP(KP)                                                      38004030
      NP=NOP(ND)                                                     38004040
      WRITE(6,F4)NDA(KP),NDA(KP+2)                                   38004050   493
```

Figure 37. MAIN Program Listing (Sheet 11 of 12)

```
      WRITE( 6,F14)                                                     38004060
C IF THE SURFACE IS PLANAR, PRINT ORIENTATION VECTOR.                   38004070   496
      IF(NSC(IN).GT.0)WRITE(6,F16)(PP(M,1,ND),M=1,3)                    38004080   498
7800  WRITE( 6,F15)              (M,P(1,M,ND),P(2,M,ND),P(3,M,ND),M=1,NP)38004090   504
      GO TO(7900,7850),KP                                               38004100
7850  IK=KC(IN)                                                        38004110
      IF(SL3.GT.0.AND.S7.EQ.0)WRITE(6,F17)(M,(MP(K,M,IK),K=1,4),M=1,NP) 38004120   515
7900  CONTINUE                                                          38004130
8000  WRITE( 6,F31)              NDA(1),NDA(3),(X1(M,1),X1(M,2),Y1(M),M=138004140
     1,NVL)                                                             38004150   526
      WRITE( 6,F32)              NHI,NVI                                38004160
C PRINT POINT FACTORS COMPUTED, BUT NOT TO EXCEED 625(STANDARD 24X24)   38004170
C CONTROLLED BY SUB FACTOR.                                             38004180   533
      WRITE( 6,F33)                                                     38004190   534
      IF(NHL-25)8050 ,8050 ,8040                                        38004200
8040  NHL=25                                                            38004210
8050  IF(NVL-25)8070 ,8070 ,8060                                        38004220
8060  NVL=25                                                            38004230
8070  DO 8080     N=1,NVL                                               38004240
8080  WRITE( 6,F34)              (FHP(M,N),M=1,NHL)                     38004250   543
 8100 IF(SL5)5042,8200,5042                                             38004260
 8050 SL5=0                                                             38004270
 8200 CONTINUE                                                          38004280
      GO TO  100                                                        38004290
      END                                                               38004300
```

Figure 37. MAIN Program Listing (Sheet 12 of 12)

CFACII 09/30/85 PAGE 13
38007J

STORAGE MAP

MAIN PROGRAM

COMMON VARIABLES

COMMON BLOCK // ORIGIN 00001 LENGTH 36500

SYMBOL	LOCATION	TYPE	SYMBOL	LOCATION	TYPE	SYMBOL	LOCATION	TYPE
X	00000	D	Y	00360	D	SL	00740	D
VA	02400	D	KC	04040	I	AREA	04125	R
NSN	04212	I	NSC	04277	I	NDL	04364	I
RX	04451	R	RY	04464	R	ZS	04477	R
MP	04512	I	PAF	15322	R	CL	15335	R
DK	15350	R	PT	15420	R	RA	15610	R
SP	15622	R	NMS	15660	I	MSNOS	16100	I
X1	16114	R	Y1	16306	R	DX	16403	R
FH	16500	R	FV	16575	R	PP	16672	R
BUF	33324	R	NOP	33327	I	NTITLE	33414	I
NCIM	33444	I	AREAX	33462	R	NDA	33464	I
LD	33472	I	LP	33500	I	LI	33502	I
SL1	33504	I	SL2	33505	I	SL3	33506	I
SL4	33507	I	NC	33510	I	S7	33511	I
V	33512	R	NDM	33515	I	ND	33602	I
KX	33603	I	KP	33604	I	NP	33605	I
FAP	33606	R	NHI	33607	I	NHL	33610	I
NVI	33611	I	NVL	33612	I	F	33613	R
DY	33614	R	AMAP	33615	R	NDO	33616	I
FHP	33617	R	MN	35000	I	FA	35144	R
F8	35155	R	FC	35156	R	F1	35160	R
F2	35210	R	FD	35223	R	F3	35224	R
F4	35254	R	F5	35262	R	F6	35264	R
F7	35270	R	F8	35304	R	F9	35364	R
F10	35414	R	F11	35444	R	F12	35460	R
F13	35502	R	F14	35510	R	F15	35516	R
F16	35524	R	F17	35540	R	F18	35554	R
F19	35572	R	F20	35604	R	F21	35634	R
F22	35650	R	F23	35664	R	F24	35700	R

Figure 38. MAIN Program Core Storage Map (Sheet 1 of 4)

CFACII 09/30/85 PAGE 14
38C07J

STORAGE MAP

F25	36010	R	F26	36024	R	F26A	36040	R
F27	36C7C	R	F28	36120	R	F29	36134	R
F30	36230	R	F31	36260	R	F32	36324	R
F33	36340	R	F37	36370	R	F38	36404	R
F39	36420	R	F40	36434	R	F34	36462	R
F42	36464	R	P	16675	R	KD	15350	I
NNN	C0740	I	VA	02400	D	C1	02400	R
C2	02713	R	C3	03233	R	FX	36466	R
NDN	33444	I	NDC	33446	I	TDN	33444	R
TDA	33464	R	COM	35144	R			

COMMON BLCCK DCODZ ORIGIN 36501 LENGTH 00055

OCT	00000	R	NCODZ	00007	I	NCLS	00015	I
INC	00026	I	NBLNK	00042	I	IS	00043	I
J	CCC44	I	KM	00045	I	KS	00046	I
I	00047	I	IC	00050	I	DT	00051	R
NEND	00052	I	IM	00053	I	IR	00054	I
NDT	00051	I						

UNDIMENSIONED PROGRAM VARIABLES

SYMBOL	LCCATION	TYPE	SYMBOL	LOCATION	TYPE	SYMBOL	LOCATION	TYPE
SL5	36557	I	NSID	36556	I	TNSID	36556	R
M	36560	I	NTI	36561	I	K	36562	I
NDI	36563	I	NB	36564	I	NR	36565	I
NZ	36566	I	N1	36567	I	N2	36570	I
N	36571	I	NS	36572	I	NX	36573	I
N3	36574	I	L	36575	I	IK	36576	I
NC	36577	I	NF	36600	I	K2	36601	I
KP2	366C2	I	IN	36603	I	JP	36604	I
J3	366C5	I	J1	36606	I	J2	36607	I
FR	3661C	R						

ENTRY POINTS

Figure 38. MAIN Program Core Storage Map (Sheet 2 of 4)

```
CFACII                                                                    09/30/85                    PAGE  15
    38C07J                                          STORAGE  MAP
```

```
......      SECTION     6
```

SUBROUTINES CALLED

.FRCD.	SECTION	7	.FSLI.	SECTION	8	.FRWT.	SECTION	9
.FWRD.	SECTION	10	.FSLO.	SECTION	11	DATA	SECTION	12
TXFRM	SECTION	13	DCICU	SECTION	14	MAP	SECTION	15
SILFAC	SECTION	16	FACTOR	SECTION	17	.FXEM.	SECTION	18
.UNC5.	SECTION	19	.FRTN.	SECTION	20	.FCNV.	SECTION	21
.UNC3.	SECTION	22	.UN06.	SECTION	23	.FFIL.	SECTION	24
SYSLCC	SECTION	25						

EFN IFN CORRESPONDENCE

EFN	IFN	LOCATION	EFN	IFN	LOCATION	EFN	IFN	LOCATION
1	FORMAT	3665C	10	6A	36665	90	12A	36675
1CC	13A	36676	4000	27A	36774	4100	31A	37011
434S	15A	36701	4350	21A	36735	4250	19A	36722
445C	26A	36766	120	33A	37024	4050	30A	37010
121	35A	37050	425	71A	37160	110	43A	37070
15C	51A	37102	130	48A	37076	460	97A	37245
42CC	46A	37072	149	50A	37100	198	53A	37136
199	61A	37145	50	57A	37137	200	65A	37153
5CCC	98A	37247	450	73A	37163	452	75A	37165
455	88A	37215	80	77A	37167	457	92A	37226
456	90A	37217	458	94A	37241	8200	552A	41604
5035	1C4A	37256	5050	124A	37353	5040	113A	37311
5041	116A	37320	8090	551A	41603	5042	118A	37331
5043	121A	37340	5702	184A	37553	5100	127A	37362
515C	132A	37374	8100	549A	41600	5700	181A	37545
525C	145A	37422	5200	138A	37410	5705	187A	37560
521C	140A	37414	5220	142A	37420	5270	147A	37426
532C	160A	37447	5300	153A	37437	5600	179A	37543
5301	157A	37444	5340	163A	37472	5350	167A	37500
536C	170A	37532	5420	176A	37540	5400	173A	37535

Figure 38. MAIN Program Core Storage Map (Sheet 3 of 4)

CFACII 09/30/85 PAGE 16
38007J

STORAGE MAP

57C6	19CA	37570	5710	191A	37571	5730	207A	37656
572C	195A	37615	5740	209A	37665	5725	205A	37647
5721	198A	37622	5722	200A	37627	5750	212A	37673
5755	214A	37702	9000	221A	37721	5760	348A	40420
916C	233A	37754	9150	230A	37744	9170	242A	40013
9165	239A	40006	6160	236A	37761	12000	346A	40416
920C	248A	40040	9400	261A	40073	9300	254A	40057
935C	257A	40066	9600	264A	40076	10250	286A	40153
970C	269A	40114	10000	278A	40137	9800	275A	40133
10200	281A	40142	10450	299A	40211	10300	294A	40200
104C0	296A	40204	10500	300A	40213	10600	302A	40222
115C0	339A	40370	10640	309A	40255	10800	326A	40327
1065C	313A	40263	10700	321A	40304	11000	336A	40361
109C0	332A	40345	11540	341A	40373	11550	343A	40376
6000	378A	40516	5950	357A	40437	5770	361A	40447
580C	363A	40452	5940	376A	40513	5850	368A	40465
59CC	370A	40474	5930	375A	40511	5920	373A	40502
602C	386A	40537	6200	390A	40562	6300	392A	40565
670C	426A	40747	6400	394A	40567	6600	423A	40744
65CC	400A	40620	6720	430A	40754	6760	435A	40774
677C	437A	40777	7000	466A	41150	6780	442A	41036
6800	446A	41044	6840	459A	41122	6810	448A	41052
7C5C	470A	41157	7100	473A	41205	7350	483A	41244
7400	485A	41246	7900	524A	41461	7600	489A	41261
78CC	504A	41337	7850	512A	41407	8000	526A	41463
8050	537A	41537	8040	536A	41535	8070	540A	41545
806C	539A	41543	8080	543A	41556			

CECK LENGTH IN OCTAL IS C3C65.

Figure 38. MAIN Program Core Storage Map (Sheet 4 of 4)

```
CFACII                                                                  09/30/85                PAGE  14
    38107J     -  EFN   SOURCE STATEMENT  -  IFN(S)  -

C THERMAL ANALYSIS CONFAC PROGRAM-NASA CONTRACT NAS9-4133                 38100010
C DCODZ (CONFAC II)ANALYSIS AND PROGRAMMING BY K.A.TOUPS,NAASID           38100020
C FORTRAN IV VERSION 7/31/65                                              38100030
      BLOCK DATA                                                          38100040
      COMMON/DCODZ/OCT(7),NCODZ(6),NCLS(9),INC(12),NBLNK,IS,J,KM,KS,I,    38100050
     1IC,DT,NEND,IM,IR                                                    38100060
      DATA NCODZ/1HT,1HC,1HI,1HS,1HG,1HD/                                 38100070
      DATA NCLS /1H1,1H2,1H3,1H4,1H5,1H6,1H7,1H8,1H9/                     38100080
      DATA INC  /6H     1,6H     2,6H     3,6H     4,6H     5,6H     6,  38100090
     16H     7,6H     8,6H     9,6H    10,6H    11,6H    12/,NBLNK/6H     38100100
     4   /,OCT/O77000000000,1H0,6H000001,6H 00000,O777777770000,         38100110
     56H0000  ,6H    00/,NEND/6HEND   /,IR/2H9R/                          38100120
      END                                                                 38100130
```

Figure 39. Subprogram DCODZ

```
CFACII                                                    09/30/85                PAGE  75
    38107J                                  STØRAGE  MAP

                                              BLØCK  DATA

                                        CØMMØN   VARIABLES

                CØMMØN BLØCK      DCØDZ          ØRIGIN       00000          LENGTH       00055

SYMBØL      LØCATIØN      TYPE      SYMBØL      LØCATIØN      TYPE      SYMBØL      LØCATIØN      TYPE
ØCT          00000         R        NCØDZ        00007         I        NCLS         00015         I
INC          00026         I        NBLNK        00042         I        IS           00043         I
J            00044         I        KM           00045         I        KS           00046         I
I            00047         I        IC           00050         I        DT           00051         R
NEND         00052         I        IM           00053         I        IR           00054         I
  DECK LENGTH IN ØCTAL IS      00001.
```

Figure 40. DCODZ Storage Map

```
C THERMAL ANALYSIS CONFAC PROGRAM-NASA CONTRACT NAS9-4133                38200010
C UNIVEC(CONFAC II)ANALYSIS AND PROGRAMMING BY K.A.TOUPS,NAASID           38200020
C FORTRAN IV VERSION 7/31/65                                              38200030
      SUBROUTINE UNIVEC(I,K,J,M,N)                                        38200040
C THIS SUBROUTINE COMPUTES THE DIRECTION COSINES OF A VECTOR NORMAL TO    38200050
C THE POINTS J,M,N IN ARRAY P(X,Y,K) OR PT(X,Y,K), AS CONTROLLED BY I.    38200060
C THE CROSS PRODUCT YIELDS A VECTOR NORMAL TO THE SURFACE. THIS VECTOR    38200070
C IS UNITIZED, THUS YIELDING THE DIRECTION COSINES OF A UNIT VECTOR,      38200080
C WHICH ARE ALSO THE XYZ VALUES DEFINING THE UNIT VECTOR.                 38200090
      DIMENSION  P(3,102,21),KD(4,10 ),NNN(100,2)                         38200100
      DIMENSION D(2,3)                                                    38200110
      DOUBLE PRECISION X,Y,SL,VA                                          38200120
      INTEGER S7,SL1,SL2,SL3,SL4                                          38200130
      COMMON X(120),Y(120),SL(4,100),VA(4,100),KC(53),AREA(53),NSN(53),   38200140
     1NSC(53),NDL(53),RX(11),RY(11),ZS(11),MP(4,102,11),PAF(11),CL(11),   38200150
     2DK(4,10),PT(3,4,10),RA(10),SP(3,10),NMS(12,12),                     38200160
     3MSNOS(12),X1(61,2),Y1(61),DX(61),FH(61),FV(61),PP(3,102,21),        38200170
     4BUF(3),NOP(53),NTITLE(12,2)  ,NCIM(14),AREAX(2),NDA(6),LD(6),       38200180
     5LP(2),LI(2),SL1,SL2,SL3,SL4,NC,S7,V(3),NDM(53),                     38200190
     6ND,KX,KP,NP,FAP,NHI,NHL,NVI,NVL,F,DY,AMAP,NDO,FHP(25,25),MN(100)    38200200
      EQUIVALENCE (P,PP(4)),(KD,DK),(SL,NNN)                              38200210
      I1=N                                                                38200220
 10   DO 40  I2=1,2                                                       38200230
      IF(I)30,20,30                                                       38200240
 20   DO 25  I3=1,3                                                       38200250
 25   D(I2,I3)=P(I3,I1,K)-P(I3,M,K)                                       38200260
      GO TO 40                                                            38200270
 30   DO 35 I3=1,3                                                        38200280
 35   D(I2,I3)=PT(I3,I1,K)-PT(I3,M,K)                                     38200290
 40   I1=J                                                                38200300
      V(1)=D(1,2)*D(2,3)-D(2,2)*D(1,3)                                    38200310
      V(2)=D(2,1)*D(1,3)-D(1,1)*D(2,3)                                    38200320
      V(3)=D(1,1)*D(2,2)-D(2,1)*D(1,2)                                    38200330
      VL=SQRT (V(1)**2+V(2)**2+V(3)**2)                                   38200340    28
      V(1)=V(1)/VL                                                        38200350
      V(2)=V(2)/VL                                                        38200360
```

Figure 41. Subroutine UNIVEC Listing (Sheet 1 of 2)

```
CFACII                                                          09/30/85          PAGE  17
    38207J      -  EFN   SOURCE STATEMENT  -  IFN(S)  -

V(3)=V(3)/VL                                                     38200370
RETURN                                                           38200380
END                                                              38200390
```

Figure 41. Subroutine UNIVEC Listing (Sheet 2 of 2)

CFACII 09/30/85 PAGE 76
38207J

STØRAGE MAP

SUBRØUTINE UNIVEC

CØMMØN VARIABLES

CØMMØN BLØCK // ØRIGIN 00001 LENGTH 35144

SYMBØL	LØCATIØN	TYPE	SYMBØL	LØCATIØN	TYPE	SYMBØL	LØCATIØN	TYPE
X	00000	D	Y	00360	D	SL	00740	D
VA	02400	D	KC	04040	I	AREA	04125	R
NSN	04212	I	NSC	04277	I	NDL	04364	I
RX	04451	R	RY	04464	R	ZS	04477	R
MP	04512	I	PAF	15322	R	CL	15335	R
DK	15350	R	PT	15420	R	RA	15610	R
SP	15622	R	NMS	15660	I	MSNØS	16100	I
X1	16114	R	Y1	16306	R	DX	16403	R
FH	16500	R	FV	16575	R	PP	16672	R
BUF	33324	R	NØP	33327	I	NTITLE	33414	I
NCIM	33444	I	AREAX	33462	R	NDA	33464	I
LD	33472	I	LP	33500	I	LI	33502	I
SL1	33504	I	SL2	33505	I	SL3	33506	I
SL4	33507	I	NC	33510	I	S7	33511	I
V	33512	R	NDM	33515	I	ND	33602	I
KX	33603	I	KP	33604	I	NP	33605	I
FAP	33606	R	NHI	33607	I	NHL	33610	I
NVI	33611	I	NVL	33612	I	F	33613	R
DY	33614	R	AMAP	33615	R	NDØ	33616	I
FHP	33617	R	MN	35000	I	P	16675	R
KD	15350	I	NNN	00740	I			

DIMENSIØNED PRØGRAM VARIABLES

SYMBØL	LØCATIØN	TYPE	SYMBØL	LØCATIØN	TYPE	SYMBØL	LØCATIØN	TYPE
D	35145	R						

Figure 42. Subroutine UNIVEC Core Storage Map (Sheet 1 of 2)

```
CFACII                                                          09/30/85                PAGE  77
     38207J                                  STØRAGE  MAP

                                        UNDIMENSIØNFD PRØGRAM VARIABLES

SYMBØL      LØCATIØN      TYPE      SYMBØL      LØCATIØN      TYPE      SYMBØL      LØCATIØN      TYPE
I1           35153         I        I2           35154         I        VL           35155         R

                                                ENTRY PØINTS

     UNIVEC      SECTIØN     4

                                                SUBRØUTINES CALLED

     SØRT        SECTIØN     5          SYSLØC      SECTIØN     6

                                          EFN   IFN   CØRRESPØNDENCE

EFN         IFN         LØCATIØN    EFN         IFN         LØCATIØN    EFN         IFN         LØCATIØN
10           2A          35175      40           24A         35275      30           16A         35251
20           7A          35224      25           10A         35242      35           19A         35267

  DECK LENGTH IN ØCTAL IS     00255.
```

Figure 42. Subroutine UNIVEC Core Storage Map (Sheet 2 of 2)

```
C THERMAL ANALYSIS CONFAC PROGRAM-NASA CONTRACT NAS9-4133
C DATA  (CONFAC II)ANALYSIS AND PROGRAMMING BY K.A.TOUPS,NAASID
C FORTRAN IV VERSION 7/31/65
      SUBROUTINE DATA
C THIS SUBROUTINE READS,INTERPRETS AND PROCESSES SURFACE AND
C TRANSFORMATION DATA, INCLUDING INTERNALLY GENERATED SURFACE DAT
      DIMENSION  P(3,102,21),KD(4,10 ),NNN(100,2),FX(10),TDN(12),NDC(10)
     1,NDN(12),TDA(6),C(700)
      INTEGER S7,SL1,SL2,SL3,SL4
      COMMON X(120),Y(120),SL(4,100),VA(4,100),KC(53),AREA(53),NSN(53),
     1NSC(53),NDL(53),RX(11),RY(11),ZS(11),MP(4,102,11),PAF(11),CL(11),
     2DK(4,10),PT(3,4,10),RA(10),SP(3,10),NMS(12,12),
     3MSNOS(12),X1(61,2),Y1(61),DX(61),FH(61),FV(61),PP(3,102,21),
     4BUF(3),NOP(53),NTITLE(12,2)  ,NCIM(14),AREAX(2),NDA(6),LD(6),
     5LP(2),LI(2),SL1,SL2,SL3,SL4,NC,S7,V(3),NDM(53),
     6ND,KX,KP,NP,FAP,NHI,NHL,NVI,NVL,F,DY,AMAP,NDO,FHP(25,25),MN(100)
      COMMON FA(9),FB(1),FC(2),F1(24),F2(11),FD(1),F3(24),F4( 6),F5( 2),
     1F6( 4),F7(12),F8(48),F9(24),F10(24),F11(12),F12(18),F13(6),
     2F14( 6),F15( 6),F16(12),F17(12),F18(14),F19(10),F20(24),F21(12),
     3F22(12),F23(12),F24(72),F25(12),F26(12),F26A(24),F27(24),F28(12),
     4F29( 60),F30( 24),F31( 36),F32( 12),F33( 24),F37( 12),
     5F38(12),F39(12),F40(22),F34(2),F42(12)
      COMMON/DCODZ/OCT(7),NCODZ(6),NCLS(9),INC(12),NBLNK,IS,J,KM,KS,I,
     1IC,DT,NEND,IM,IR
      DOUBLE PRECISION X,Y,SL,VA,SINA,SINB,SINC,COSA,COSB,ANG,XB,YB
      EQUIVALENCE (P,PP(4)),(KD,DK),(SL,NNN),(VA,C1),(VA(4,26),C2),
     1(VA(4,52),C3),(DT,NDT),(FX,F42(3)),(NSID,TNSID)
     2,(NDN(3),NDC),(TDA,NDA),(TDN,NDN,NCIM),(P,C)
      NAMELIST/D/C
1     FORMAT(12A6)
C DETERMINE CLASS OF DATA FROM NUMERAL IN COL 1
450   DO  500  IT=1,9
      IF(NCLS(IT)-NDT) 500 ,550  , 500
500   CONTINUE
C IF FLOW TO THIS POINT, NO CLASS IS GIVEN-INTERPRET AS ERROR-PRINT
C WORD AND TERMINATE JOB
```

Figure 43. Subroutine DATA Listing (Sheet 1 of 13)

```
      WRITE( 6,F3)NDN(1)                                                38300390    9
      GO TO 1960                                                        38300400
C PRINT  DATA NAME AND PROCESS ACCORDING TO CLASS                       38300410
550   WRITE( 6,F4)                NDN(1),NBLNK                          38300420
C PRINT COMMENTS ON REST OF NAME CARD- WORDS 3-6                        38300430   11
      WRITE( 6,F42)NDC                                                  38300440
C ADVANCE COUNT FOR NAME,CLASS,AREA, AND XREF ARRAYS                    38300450   12
      IS=IS+1                                                           38300460
C STORE NAME OF DATA                                                    38300470
      NSN(IS)=NDN(1)                                                    38300480
C STORE CLASS OF DATA(ASSUME A NONPLANAR SURFACE INITIALLY(NEG SIGN))   38300490
      NSC(IS)=-IT                                                       38300500
      AREA(IS)=0.                                                       38300510
      SL1=0                                                             38300520
C DATA BELOW CLASS 7 ARE SURFACE DATA TO BE STORED IN ARRAY P, AND      38300530
C IN THE CASE OF SOLIDS, CONNECTIONS ARE STORED IN MP                   38300540
      IF(IT-6)600,600,700                                               38300550
C ADVANCE COUNT FOR SURFACE DATA STORAGE                                38300560
600   I=I+1                                                             38300570
C IF THE MAXIMUM ALLOWABLE NO OF SURFACES ARE EXCEEDED, STOP JOB        38300580
      IF(I-21)660 ,660 ,650                                             38300590
650   WRITE( 6,F38)                                                     38300600   23
      GO TO 1960                                                        38300610
C ESTABLISH X-REF BETWEEN NAME SUBSCRIPT(IS) AND DATA SUBSCRIPT (I)     38300620
660   NDL(IS)=I                                                         38300630
C FLOW TO PROCESSING IS CONTROLLED BY CLASS NO. INDICATE BY VALUE OF IT 38300640
C IT=1, A    PLANE SURFACE, SILHOUETTE FORMED BY THE INPUT DATA.        38300650
C IT=2, A NONPLANAR SURFACE, SILHOUETTE FORMED BY THE INPUT DATA.       38300660
C IT=3, A PLANE SURFACE TO BE INTERNALLY GENERATED BY CODED INSTRUCTIONS38300670
C GIVEN IN DATA.  THE BOUNDARY POINTS GENERATED WILL BE USED DIRECTLY   38300680
C AND THE SILHOUETTE GEN. WILL NOT BE EMPLOYED                          38300690
C IT=4, A PLANE SURFACE IS GIVEN IN DATA ALONG WITH SURFACE POINT       38300700
C CONNECTIONS DATA WHICH WILL BE USED BY THE SILHOUETTE GENERATOR.      38300710
C IT=5, SAME AS 4,EXCEPT  THE SURFACE IS NONPLANAR                      38300720
C IT=6, A PLANE OR SOLID SURFACE PER THE CODED INSTRJCTIONS WILL BE     38300730
C INTERNALLY GENERATED ALONG WITH CONNECTIONS DATA FOR USE BY THE       38300740
C SILHOUETTE GENERATOR(SUBROUTINE SILFAC)                               38300750
```

Figure 43. Subroutine DATA Listing (Sheet 2 of 13)

```
C IT=7, A SPHERE AS GIVEN IN DATA WILL BE USED(SURFACE 2 ONLY)
C IT=8, A GROUP OF SURFACES ARE GIVEN IN DATA(SURFACE 2 ONLY)
C IT=9, TRANSFORM DATA
700   GO TO(1100 ,1200 ,1300 ,1400 ,1500 ,1600 ,1700 ,1800 ,1900 ),IT
C SET CLASS NO. + TO INDICATE A PLANE SURFACE
1100  NSC(IS)=IT
C READ INPUT DATA FOR CLASSES 1 AND 2
 1200 IF(NDN(3)-NBLNK)4900,1238,4900
 1238 IF(IM)5000,1205,5000
 5000 READ(3,F5)PN,P(1,1,I),P(2,1,I),P(3,1,I),P(1,2,I),P(2,2,I)      34
      GO TO 1210
 1205 READ(5,F5)PN,P(1,1,I),P(2,1,I),P(3,1,I),P(1,2,I),P(2,2,I)      41
 1210 NOP(I)=PN
C IF THE MAX ALLOWABLE NO.OF SURF DATA POINTS ARE EXCEEDED, STOP JOB
      IF(NOP(I)-100)1240 ,1240 ,1220
1220  F12(10)=F11(10)
C SELECT HOLLERITH FOR ERROR PRINTOUT AND TERMINATE JOB
      GO TO 1940
C READ REMAINDER OF THIS SURFACE DATA
1240  NP=NOP(I)
      IF(IM)5100,1250,5100
 5100 READ( 3,F5)              P(3,2,I),((P(K,M,I),K=1,3),M=3,NP)    57
      GO TO 2200
 1250 READ( 5,F5)              P(3,2,I),((P(K,M,I),K=1,3),M=3,NP)    70
      GO TO 2200
C READ CLASS 3 DATA-INTERNAL PLANE POLYGON-CONSTANT SILUET BOUNDARY PTS.
 1300 IF(NDN(3)-NBLNK)5479,1301,5479
 1301 IF(IM)5200,1305,5200
 5200 READ( 3,F5)               SID,XB,YB,ZS(1),RX(1),RY(1)          86
      GO TO 1310
 1305 READ( 5,F5)               SID,XB,YB,ZS(1),RX(1),RY(1)          88
 1310 NSEC=1
C PRINT SPECIFICATIONS
      GO TO 1690
C READ DATA FOR A PLANE SURFACE W/CONNECTION DATA-CLASS 4
1400  NSC(IS)=IT
C READ DATA FOR A NONPLANAR SURFACE W/CONNECTION DATA-CLASS 5
```

Figure 43. Subroutine DATA Listing (Sheet 3 of 13)

```
C ADVANCE COUNTER LOCATING CONNECTIONS DATA                          38301130
1500  IC=IC+1                                                        38301140
      IF(IC-11)1460 ,1460 ,1450                                      38301150
1450  WRITE( 6,F37)                                                  38301160   96
      GO TO 1960                                                     38301170
C CROSS REFERENCE SURFACE DATA LOCATION TO CONNECTIONS               38301180
1460  KC(IS)=IC                                                      38301190
      SL1=1                                                          38301200
C READ DATA- XYZ COORDINATES AND CONNECTIONS TO OTHER POINTS FORMING  38301210
C BOUNDARY(LIMIT 4)                                                  38301220
      IF(NDN(3)-NBLNK)4900,5290,4900                                 38301230
 4900 IF(IM)4910,4920,4910                                           38301240
 4910 READ(3,D)                                                      38301250   104
      GO TO 4930                                                     38301260
 4920 READ(5,D)                                                      38301270   107
 4930 IF(C(1).GT.100.)GO TO 1220                                     38301280
      NP=C(1)                                                        38301290
      NOP(I)=NP                                                      38301300
      M=1                                                            38301310
      DO 4980 K=1,NP                                                 38301320
      P(1,K,I)=C(M+1)                                                38301330
      P(2,K,I)= C(M+2)                                               38301340
      P(3,K,I)= C(M+3)                                               38301350
      M=M+3                                                          38301360
      IF(SL1)4960,4980,4960                                          38301370
 4960 DO 4970  LK=1,4                                                38301380
      M=M+1                                                          38301390
      MP(LK, K,IC)=C(M)                                              38301400
 4970 CONTINUE                                                       38301410
 4980 CONTINUE                                                       38301420
      GO TO 2200                                                     38301430
 5290 IF(IM)5300,1461,5300                                           38301440
 5300 READ( 3,F6)PN,(P(M,1,I),M=1,3),(MP(M,1,IC),M=1,4),P(1,2,I)     38301450   140
      GO TO 1462                                                     38301460
 1461 READ( 5,F6)PN,(P(M,1,I),M=1,3),(MP(M,1,IC),M=1,4),P(1,2,I)     38301470   155
 1462 NOP(I)=PN                                                      38301480
C TEST AGAINST MAX ALLOWABLE                                         38301490
```

Figure 43. Subroutine DATA Listing (Sheet 4 of 13)

```
      IF(NOP(I)-100 )1520 ,1520  ,1220                                  38301500
C READ REMAINDER OF DATA IF MAX NO. OF POINTS IS NOT EXCEEDED           38301510
1520  NP=NOP(I)                                                        38301520
      IF(IM)5400,1521,5400                                              38301530
 5400 READ( 3,F7)                P(2,2,I),P(3,2,I),(MP(M,2,IC),M=1,4),  38301540
     1((P(M,K,I),M=1,3),(MP(M,K,IC),M=1,4),K=3,NP)                      38301550   177
      GO TO 2200                                                        38301560
 1521 READ( 5,F7)                P(2,2,I),P(3,2,I),(MP(M,2,IC),M=1,4),  38301570
     1((P(M,K,I),M=1,3),(MP(M,K,IC),M=1,4),K=3,NP)                      38301580   200
      GO TO 2200                                                        38301590
C READ CLASS 6 DATA TO GENERATE A PLANE POLYGON OR MULTIFACETED SURFACE 38301600
C   W/CONNECTIONS DATA                                                  38301610
1600  SL1=1                                                             38301620
      IF(NDN(3)-NBLNK)5480,1601,5480                                    38301630
 5479 NSEC=1                                                            38301640
      M=1                                                               38301650
 5480 IF(IM)5482,5484,5482                                              38301660
 5482 READ(3,D)                                                         38301670   230
      GO TO 5486                                                        38301680
 5484 READ(5,D)                                                         38301690   233
 5486 SID=C(1)                                                          38301700
      IF(SL1)5492,5494,5492                                             38301710
 5492 NSEC=C(2)                                                         38301720
      M=2                                                               38301730
      IF(11-NSEC)5493,5494,5494                                         38301740
 5493 F12(10)=F11(11)                                                   38301750
      GO TO 1940                                                        38301760
 5494 XB=C(M+1)                                                         38301770
      YB=C(M+2)                                                         38301780
      DO 5495  MS=1,NSEC                                                38301790
      M=M+3                                                             38301800
      ZS(MS)=C(M)                                                       38301810
      RX(MS)=C(M+1)                                                     38301820
 5495 RY(MS)=C(M+2)                                                     38301830
      GO TO 1690                                                        38301840
 1601 IF(IM)5500,1602,5500                                              38301850
 5500 READ( 3,F5)                SID,SEC,XB,YB,ZS(1),RX(1)              38301860   262
```

Figure 43. Subroutine DATA Listing (Sheet 5 of 13)

```
      NSEC=SEC                                                          38301870
      READ( 3,F5)              RY(1),(ZS(M),RX(M),RY(M),M=2,NSEC)       38301880   263
      GO TO 1690                                                        38301890
 1602 READ( 5,F5)              SID,SEC,XB,YB,ZS(1),RX(1)                38301900   273
      NSEC=SEC                                                          38301910
      READ( 5,F5)              RY(1),(ZS(M),RX(M),RY(M),M=2,NSEC)       38301920   274
 1690 NSID=SID                                                          38301930
      WRITE(6,F8)NSEC,NSID,XB,YB,(M,RX(M),RY(M),ZS(M),M=1,NSEC)         38301940   284
      WRITE( 6,F9)                                                      38301950   293
      IF(SID)1670,1670,1695                                             38301960
 1670 WRITE(6,1680)                                                     38301970   295
 1680 FORMAT(32 H-THERE IS AN ERROR IN ABOVE DATA)                      38301980
      GO TO 1960                                                        38301990
C IS A PLANE POLYGON REQUESTED-YES,2000 -NO,2040                        38302000
 1695 IF(NSEC-1)1670 ,2000 ,2040                                        38302010
C     READ  CLASS 7 DATA(SPHERE)                                        38302020
 1700 KS=KS+1                                                           38302030
      IF(KS-10)1750,1750,1920                                           38302040
 1750 NDL(IS)=KS                                                        38302050
      IF(NDN(3)-NBLNK)5560,5590,5560                                    38302060
 5560 IF(IM)5561,5562,5561                                              38302070
 5561 READ(3,D)                                                         38302080   307
      GO TO 5563                                                        38302090
 5562 READ(5,D)                                                         38302100   310
 5563 RA(KS)=C(1)                                                       38302110
      DO 5564 M=1,3                                                     38302120
 5564 SP(M,KS)=C(M+1)                                                   38302130
      GO TO 1752                                                        38302140
 5590 IF(IM)5600,1751,5600                                              38302150
 5600 READ( 3,F5)              RA(KS),(SP(M,KS),M=1,3)                  38302160   325
      GO TO 1752                                                        38302170
 1751 READ( 5,F5)              RA(KS),(SP(M,KS),M=1,3)                  38302180   334
 1752 WRITE( 6,F10)            RA(KS),(SP(M,KS),M=1,3)                  38302190
C COMPUTE AREA OF SPHERE                                                38302200   342
      AREA(IS)=12.566371*RA(KS)**2                                      38302210
      GO TO 100                                                         38302220
C READ CLASS 8 DATA(MULTISURFACE)                                       38302230
```

Figure 43. Subroutine DATA Listing (Sheet 6 of 13)

```
      CFACII                                                                  09/30/85                    PAGE  7
          38307J     -  EFN   SOURCE STATEMENT  -  IFN(S)  -

1800  KM=KM+1                                                                 38302240
      IF(KM-12)1850 ,1850 ,1920                                               38302250
1850  NDM(IS)=KM                                                              38302260
      IF(IM)5700,1851,5700                                                    38302270
 5700 READ( 3,1)                  (NMS(M,KM),M=1,12)                         38302280    360
      GO TO 1852                                                              38302290
 1851 READ( 5,1)                  (NMS(M,KM),M=1,12)                         38302300    368
 1852 WRITE( 6,F11)               (NMS(M,KM),M=1,12)                         38302310    375
      GO TO 100                                                               38302320
C READ TXFRM DATA                                                             38302330
1900  J=J+1                                                                   38302340
      NDL(IS)=J                                                               38302350
C IF MAX ALLOWABLE TXFRM DATA IS EXCEEDED, STOP JOB                           38302360
      IF(J-10 )1980 ,1980 , 1920                                              38302370
1920  F12(10)=F11(9)                                                          38302380
1940  WRITE( 6,F12)                                                           38302390    388
1960  CALL EXIT                                                               38302400    390
      STOP                                                                    38302410
 1980 IF(NDN(3)-NBLNK)5730,5720,5730                                          38302420
 5730 IF(IM)5740,5750,5740                                                    38302430
 5740 READ(3,D)                                                               38302440    396
      GO TO 5760                                                              38302450
 5750 READ(5,D)                                                               38302460    399
 5760 DO 5790 K=1,3                                                           38302470
      KD( K+1,J) =C(4*K-3)                                                    38302480
      PT(1,K+1,J)=C(4*K-2)                                                    38302490
      PT(2,K+1,J)=C(4*K-1)                                                    38302500
 5790 PT(3,K+1,J)=C(4*K)                                                      38302510
      GO TO 1983                                                              38302520
 5720 IF(IM)5800,1981,5800                                                    38302530
 5800 READ( 3,F5)                 (DK(K,J),(PT(M,K,J),M=1,3),K=2,4)          38302540    419
      GO TO 1982                                                              38302550
 1981 READ( 5,F5)                 (DK(K,J),(PT(M,K,J),M=1,3),K=2,4)          38302560    431
 1982 KD(2,J)=DK(2,J)                                                         38302570
      KD(3,J)=DK(3,J)                                                         38302580
      KD(4,J)=DK(4,J)                                                         38302590
C CREATE A 4TH POINT NORMAL TO THREE READ IN DATA                             38302600
```

Figure 43. Subroutine DATA Listing (Sheet 7 of 13)

```
      CFACII                                                          09/30/85                PAGE  8
          38307J     -  EFN   SOURCE STATEMENT  -  IFN(S)  -

 1983 CALL UNIVEC(1,J,2,3,4)                                          38302610    450
      PT(1,1,J)=PT(1,3,J)+V(1)                                        38302620
      PT(2,1,J)=PT(2,3,J)+V(2)                                        38302630
      PT(3,1,J)=PT(3,3,J)+V(3)                                        38302640
      WRITE( 6,F13)                                                   38302650    458
      WRITE( 6,F14)                                                   38302660    459
      WRITE( 6,F15)              (KD(M,J),PT(1,M,J),PT(2,M,J),PT(3,M,J),38302670
     1M=2,4)                                                          38302680    460
      GO TO 100                                                       38302690
2000  NSC(IS)=IT                                                      38302700
C GENERATE X,Y,Z COORDINATES FOR CLASS 3 AND 6 DATA                   38302710
C IF MAX ALLOWABLE NO OF POINTS ARE EXCEEDED, STOP JOB                38302720
2040  IF(NSEC*NSID+NSEC-102)2050 ,2050 ,1220                          38302730
C INITIALIZE PARAMETERS                                               38302740
2050  ANG=6.28318530717946/DBLE(SID)                                  38302750
      SINB=DSIN(ANG)                                                  38302760    476
      COSB=DCOS(ANG)                                                  38302770    477
      COSA=1.D0                                                       38302780
      SINA=0.D0                                                       38302790
      NP=0                                                            38302800
C ADD 1 TO NO.OF SIDES TO CLOSE SURFACE(USED IN SURFACE AREA COMP)    38302810
      NCP=NSID+1                                                      38302820
      DO 2150    K=1,NCP                                              38302830
      DO 2100    M=1,NSEC                                             38302840
      NP=NP+1                                                         38302850
      P(1,NP,I)=DBLE(RX(M))*COSA+XB                                   38302860
      P(2,NP,I)=DBLE(RY(M))*SINA+YB                                   38302870
2100  P(3,NP,I)=ZS(M)                                                 38302880
C COMPUTE NEW VALUES OF SINA,COSA BY (A+B) FORMULA                    38302890
      SINC= SINA*SINB                                                 38302900
      SINA= SINA*COSB+COSA*SINB                                       38302910
2150  COSA= COSA*COSB-SINC                                            38302920
C STORE NO OF POINTS GENERATED(DO NOT INCLUDE CLOSJRE POINTS)         38302930
      NP=NP-NSEC                                                      38302940
      NOP(I)=NP                                                       38302950
C IF A PLANE, ERECT A UNIT VECTOR FROM  POINT 1 AND COMPUTE AREA      38302960
C IF NONPLANAR, TRANSFER TO GENERATE CONNECTIONS DATA                 38302970
```

Figure 43. Subroutine DATA Listing (Sheet 8 of 13)

```
      IF(NSC(IS))3000,3000,2160                                         38302980
2160  PP(1,1,I)=P(1,1,I)                                                38302990
      PP(2,1,I)=P(2,1,I)                                                38303000
      AREA(IS)=SID*RX(1)*RY(1)*SNGL(SINB)/2.                            38303010
      PP(3,1,I)=P(3,1,I)+SIGN(1.,AREA(IS))                              38303020
      AREA(IS)=ABS(AREA(IS))                                            38303030
C GENERATE CLASS 6 CONNECTIONS DATA OR CLASS 3 PRINTOUT                 38303040
      IF(NSC(IS)-3)4000 ,4400 ,4000                                     38303050
C CLOSE THE SURFACE TO FACILITATE AREA AND FACTOR COMPUTATION-CLASS 1,2 38303060
2200  K=NP+1                                                            38303070
      P(1,K,I)=P(1,1,I)                                                 38303080
      P(2,K,I)=P(2,1,I)                                                 38303090
      P(3,K,I)=P(3,1,I)                                                 38303100
2240  IF(NSC(IS))4400 ,4400 ,2250                                       38303110
C GENERATE   UNIT ORIENTATION VECTOR  DCOS FOR CLASSES 1,4              38303120
2250  CALL UNIVEC(0,I,NP,1,2)                                           38303130    526
      SL3=1                                                             38303140
      SL4=1                                                             38303150
      DO 2600  M=1,3                                                    38303160
      IF(SL3)2265,2350,2265                                             38303170
2265  SL3=0                                                             38303180
2270  IF(ABS (V(M))-.1)2300 ,2300 ,2470                                 38303190
2300  SL3=1                                                             38303200
2350  IF(SL4)2355,2450,2355                                             38303210
2355  SL4=0                                                             38303220
2400  N1=M                                                              38303230
      GO TO 2600                                                        38303240
2450  N2=M                                                              38303250
      GO TO 2600                                                        38303260
C IF PTS 1,2 AND LAST FORM A TRIANGLE LYING IN THE SURFACE, THE ORIENTA-38303270
C TION VECTOR DIRECTION COSINE AND THE COMPUTED PROJECTED AREA WILL HAVE38303280
C THE SAME SIGN FOR AREAS COMPUTED ON THE ZY AND XY PLANES, AND ARE     38303290
C OPPOSITE IN SIGN ON XZ PLANE. THE SIGN OF THE DC IS THEREFORE REVERSED38303300
C TO YIELD A POSITIVE NUMBER FOR AREA.                                  38303310
2470  IF(M-2)2550 ,2500 ,2550                                           38303320
2500  DC=-V(M)                                                          38303330
      GO TO 2600                                                        38303340
```

Figure 43. Subroutine DATA Listing (Sheet 9 of 13)

```
2550  DC=V(M)                                                          38303350
2600  CONTINUE                                                         38303360
C PUT N1 COORDINATE OF CLOSURE POINT TEMPORARILY IN NO.1 SPOT IN ARRAY  38303370
C PP TO FACILITATE AREA COMPUTATION.                                    38303380
      PP(N1,1,I)=PP(N1,K,I)                                             38303390
C COMPUTE PROJECTED AREA ON PRINCIPAL  PLANE N1,N2                      38303400
      DO 2650   M=2,K                                                   38303410
2650  AREA(IS)=AREA(IS)+PP(N2,M,I)*(PP(N1,M-1,I)-PP(N1,M+1,I))          38303420
      AREA(IS)=AREA(IS)/DC/2.                                           38303430
C IF THE AREA IS NEGATIVE  THE ORIENTATION VECTOR MUST BE REVERSED. THE 38303440
C 1,2 AND LAST DATA POINTS FORMED THE SMALLER ANGLE OUTSIDE THE SURFACE 38303450
C PROPER WHEN THE X-PRODUCT WAS TAKEN TO CREATE THE ORIENTATION VECTOR. 38303460
      IF(AREA(IS))2700 ,2750 ,2750                                      38303470
2700  V(1)=-V(1)                                                        38303480
      V(2)=-V(2)                                                        38303490
      V(3)=-V(3)                                                        38303500
      AREA(IS)=ABS (AREA(IS))                                           38303510
C ERECT UNIT ORIENTATION VECTOR                                         38303520
2750  PP(1,1,I)=PP(1,2,I)+V(1)                                          38303530
      PP(2,1,I)=PP(2,2,I)+V(2)                                          38303540
      PP(3,1,I)=PP(3,2,I)+V(3)                                          38303550
      GO TO 4400                                                        38303560
C DETERMINE IF X-SECTIONS ARE SIMILAR, AND IF CIRCULAR OR ELLIPTICAL    38303570
3000  SL3=1                                                             38303580
      SL4=0                                                             38303590
      DO 3300  N=1,NSEC                                                 38303600
      RAL=ABS(RX(N)/RY(N))                                              38303610
      IF(RAL)3050 ,3300 ,3050                                           38303620
C SL3 IS USED TO CONTROL FLOW TO INTIALIZE RAF FOR FIRST NONZERO RAL    38303630
3050  IF(SL3)3100,3200,3100                                             38303640
3100  RAF=RAL                                                           38303650
      SL3=0                                                             38303660
C COMPUTE TOLERANCE FOR NON-SIMILARITY                                  38303670
      RTOL=.005*RAF                                                     38303680
C TEST CIRCULARITY                                                      38303690
      IF(ABS (RAL-1.)-.005)3150 ,3150 ,3200                             38303700
C THIS XSECTION IS CIRCULAR WITHIN TOLERANCE -SL4 ON                    38303710
```

Figure 43. Subroutine DATA Listing (Sheet 10 of 13)

```
3150  SL4=1                                                          38303720
C TEST SIMILARITY TO PRIOR XSECTION                                  38303730
C IF SIMILAR, CONTINUE. IF NOT SIMILAR, THE AREA WILL NOT BE COMPUTED 38303740
3200  IF(ABS (RAF-RAL)-RTOL)3300 ,3300 ,4000                         38303750
3300  CONTINUE                                                       38303760
C FLOW TO THIS POINT INDICATES X-SECTIONS ARE SIMILAR, AND IF SL4 IS ON,38303770
C THEY ARE CIRCULAR                                                  38303780
C THE AREA OF ONE FACET ONLY THROUGH ALL X-SECTIONS NEED BE COMPUTED 38303790
C(TIMES THE NO OF SIDES) FOR CIRCULAR X-SECTIONS. ALL MUST BE COMPUTED 38303800
C FOR ELLIPTICAL X-SECTIONS, EXCEPT FOR AN EVEN NO. OF SIDES WHEN ONLY 38303810
C HALF NEED BE BECAUSE OF SIMILARITY.                                38303820
      NS=NSID                                                        38303830
      DT= AND(TNSID,OCT(3))                                          38303840
      SL2=0                                                          38303850
      IF(DT)3460 ,3450 ,3460                                         38303860
3450  SL2=1                                                          38303870
      NS=NSID/2                                                      38303880
3460  M=0                                                            38303890
C COMPUTE PROJECTED AREA OF FACETS.    FACETS FORMED BY EQUAL PARAMETRIC38303900
C ANGLES BETWEEN PARALLEL X-SECTIONS HAVE EQUAL PROJECTED AREAS,FOR EACH38303910
C PAIR OF XSECTIONS. THE 1/2 IS CANCELLED BY A 2 IN COMPUTING SLANT  H. 38303920
C THE PROJECTED AREA IS USED TO COMPUTE THE PROJECTED SLANT HEIGHT OF 38303930
C THE FACET. THE PYTHAGOREAN THEOREM IS USED TO COMPUTE THE PLANE SLANT 38303940
C HEIGHT OF THE FACET.                                               38303950
      DO 3500    N=2,NSEC                                            38303960
3500  PAF(N) =  SINB*    (RX(N)*RY(N)-RX(N-1)*RY(N-1))               38303970
      DO 3800  N=1,NS                                                38303980
      SL3=1                                                          38303990
      DO 3700  K=1,NSEC                                              38304000
      M=M+1                                                          38304010
      MM=M+NSEC                                                      38304020
C COMPUTE LENGTH OF CHORDS(TRAPEZOID BASES)                          38304030
      CL(K)=SQRT (  (P(1,M,I)-P(1,MM,I))**2+(P(2,M,I)-P(2,MM,I))**2) 38304040    634
      IF(SL3)3550,3600,3550                                          38304050
3550  SL3=0                                                          38304060
      GO TO 3700                                                     38304070
3600  AREA(IS)=AREA(IS)+ SQRT ( (PAF(K))**2+((ZS(K)-ZS(K-1))*(CL(K-1)+CL38304080
```

Figure 43. Subroutine DATA Listing (Sheet 11 of 13)

```
     1(K)))**2)                                                          38304090    646
3700  CONTINUE                                                           38304100
C IF SL4 ON, XSECTIONS ARE CIRCULAR                                       38304110
      IF(SL4)3730,3800,3730                                               38304120
3730  SL4=0                                                               38304130
3750  AREA(IS)=AREA(IS)*SID/2.                                            38304140
      GO TO 3950                                                          38304150
3800  CONTINUE                                                            38304160
C IF SL2 IS NOT ON, DIVIDE BY 2 TO YIELD AREA.                            38304170
      IF(SL2.EQ.0)AREA(IS)=AREA(IS)/2.0                                   38304180
C ADD BASE AND TOP                                                        38304190
3950  AREA(IS)=AREA(IS)+(RX(1)*RY(1)+RX(NSEC)*RY(NSEC))*SID*SINB/2.       38304200
C CREATE CONNECTIONS DATA FOR INTERNALLY GENERATED SURFACES               38304210
C INCREMENT COUNT FOR DATA STORAGE                                        38304220
4000  IC=IC+1                                                             38304230
C X-REF TO SURFACE DATA IN ARRAY P                                        38304240
      IF(IC-11)4050 ,4050 ,1450                                           38304250
4050  KC(IS)=IC                                                           38304260
C LOOK AT THE POINT WITH SURFACE ORIENTED WITH +Z-AXIS UP                 38304270
      DO 4100    M=1,NP                                                   38304280
C CONNECT TO POINT ON RIGHT                                               38304290
      MP(1,M,IC)=M+NSEC                                                   38304300
C CONNECT TO POINT ABOVE                                                  38304310
      MP(2,M,IC)=M+1                                                      38304320
C CONNECT TO POINT TO LEFT                                                38304330
      MP(3,M,IC)=M-NSEC                                                   38304340
C CONNECT TO POINT BELOW                                                  38304350
4100  MP(4,M,IC)=M-1                                                      38304360
C ESTABLISH PROPER CONNECTIONS FOR BOUNDARY POINTS-RIGHT AND LEFT FIRST   38304370
      MM=(NSID-1)*NSEC                                                    38304380
      DO  4200   M=1,NSEC                                                 38304390
      K=MM+M                                                              38304400
      MP(3,M,IC)=K                                                        38304410
4200  MP(1,K,IC)=M                                                        38304420
C ZERO OUT CONNECTIONS FOR LOWER AND TOPMOST POINTS                       38304430
      MM=NSEC-1                                                           38304440
      DO 4300   M=1,NP,NSEC                                               38304450
```

Figure 43. Subroutine DATA Listing (Sheet 12 of 13)

```
      K=M+MM                                                            38304460
      MP(4,M,IC)=0                                                      38304470
4300  MP(2,K,IC)=0                                                      38304480
C PRINT SURFACE DATA READ IN OR GENERATED                               38304490
4400  WRITE( 6,F14)                                                     38304500
C IF THIS IS A PLANE SURFACE, PRINT ORIENTATION VECTOR                  38304510   704
      IF(NSC(IS).GT.0)WRITE (6,F16)(PP(M,1,I),M=1,3)                    38304520
C PRINT SURFACE DATA                                                    38304530   706
4600  WRITE( 6,F15)            (M,P(1,M,I),P(2,M,I),P(3,M,I),M=1,NP)   38304540
C PRINT CONNECTIONS IF SL1 ON                                           38304550   714
4700  IF(SL1.GT.0)WRITE(6,F17)  ( M,MP(1,M,IC),MP(2,M,IC),MP(3,M,IC),MP(38304560
     14,M,IC),M=1,NP)                                                   38304570   724
100   RETURN                                                            38304580
      END                                                               38304590
```

Figure 43. Subroutine DATA Listing (Sheet 13 of 13)

CFACII 09/30/85 PAGE 14
38307J

STORAGE MAP

SUBROUTINE DATA

COMMON VARIABLES

COMMON BLOCK // ORIGIN 00001 LENGTH 36500

SYMBOL	LOCATION	TYPE	SYMBOL	LOCATION	TYPE	SYMBOL	LOCATION	TYPE
X	00000	D	Y	00360	D	SL	00740	D
VA	02400	D	KC	04040	I	AREA	04125	R
NSN	04212	I	NSC	04277	I	NDL	04364	I
RX	04451	R	RY	04464	R	ZS	04477	R
MP	04512	I	PAF	15322	R	CL	15335	R
DK	15350	R	PT	15420	R	RA	15610	R
SP	15622	R	NMS	15660	I	MSNOS	16100	I
X1	16114	R	Y1	16306	R	DX	16403	R
FH	16500	R	FV	16575	R	PP	16672	R
BUF	33324	R	NOP	33327	I	NTITLE	33414	I
NCIM	33444	I	AREAX	33462	R	NDA	33464	I
LD	33472	I	LP	33500	I	LI	33502	I
SLI	33504	I	SL2	33505	I	SL3	33506	I
SL4	33507	I	NC	33510	I	S7	33511	I
V	33512	R	NDM	33515	I	ND	33602	I
KX	33603	I	KP	33604	I	NP	33605	I
FAP	33606	R	NHI	33607	I	NHL	33610	I
NVI	33611	I	NVL	33612	I	F	33613	R
DY	33614	R	AMAP	33615	R	NDO	33616	I
FHP	33617	R	MN	35000	I	FA	35144	R
FB	35155	R	FC	35156	R	F1	35160	R
F2	35210	R	FD	35223	R	F3	35224	R
F4	35254	R	F5	35262	R	F6	35264	R
F7	35270	R	F8	35304	R	F9	35364	R
F10	35414	R	F11	35444	R	F12	35460	R
F13	35502	R	F14	35510	R	F15	35516	R
F16	35524	R	F17	35540	R	F18	35554	R
F19	35572	R	F20	35604	R	F21	35634	R
F22	35650	R	F23	35664	R	F24	35700	R

Figure 44. Subroutine DATA Core Storage Map (Sheet 1 of 4)

CFACII 09/30/85 PAGE 15
38307J

STØRAGE MAP

F25	36010	R	F26	36024	R	F26A	36040	R
F27	36070	R	F28	36120	R	F29	36134	R
F30	36230	R	F31	36260	R	F32	36324	R
F33	36340	R	F37	36370	R	F38	36404	R
F39	36420	R	F40	36434	R	F34	36462	R
F42	36464	R	P	16675	R	C	16675	R
KD	15350	I	NNN	00740	I	VA	02400	D
C1	02400	R	C2	02713	R	C3	03233	R
FX	36466	R	NDN	33444	I	NDC	33446	I
TDN	33444	R	TDA	33464	R			

		CØMMØN BLØCK	DCØDZ		ØRIGIN	36501	LENGTH	00055
ØCT	00000	R	NCØDZ	00007	I	NCLS	00015	I
INC	00026	I	NBLNK	00042	I	IS	00043	I
J	00044	I	KM	00045	I	KS	00046	I
I	00047	I	IC	00050	I	DT	00051	R
NEND	00052	I	IM	00053	I	IR	00054	I
NDT	00051	I						

UNDIMENSIØNED PRØGRAM VARIABLES

SYMBØL	LØCATIØN	TYPE	SYMBØL	LØCATIØN	TYPE	SYMBØL	LØCATIØN	TYPE
SINA	36560	D	SINB	36562	D	SINC	36564	D
CØSA	36566	D	CØSB	36570	D	ANG	36572	D
XB	36574	D	YB	36576	D	NSID	36556	I
TNSID	36556	R	IT	36600	I	PN	36601	R
K	36602	I	M	36603	I	SID	36604	R
NSEC	36605	I	SEC	36606	R	NCP	36607	I
N1	36610	I	N2	36611	I	DC	36612	R
N	36613	I	RAL	36614	R	RAF	36615	R
RTØL	36616	R	NS	36617	I	MM	36620	I

ENTRY PØINTS

DATA SECTIØN 6

Figure 44. Subroutine DATA Core Storage Map (Sheet 2 of 4)

CFACII 09/30/85 PAGE 16
38307J

STORAGE MAP

SUBROUTINES CALLED

.FWRD.	SECTION	7	.FSLO.	SECTION	8	.FRDD.	SECTION	9
.FRDU.	SECTION	10	EXIT	SECTION	11	.EXIT.	SECTION	12
UNIVEC	SECTION	13	DSIN	SECTION	14	DCOS	SECTION	15
SQRT	SECTION	16	.FXEM.	SECTION	17	.UNO6.	SECTION	18
.FFIL.	SECTION	19	.FCNV.	SECTION	20	.UNO3.	SECTION	21
.FRTN.	SECTION	22	.UNO5.	SECTION	23	CC.1	SECTION	24
CC.2	SECTION	25	CC.3	SECTION	26	CC.4	SECTION	27
SYSLOC	SECTION	28						

EFN IFN CORRESPONDENCE

EFN	IFN	LOCATION	EFN	IFN	LOCATION	EFN	IFN	LOCATION
1	FORMAT	36672	450	1A	36706	500	7A	36714
550	11A	36727	1960	389A	40642	600	20A	36772
700	27A	37013	660	25A	37010	650	23A	37001
1100	28A	37031	1200	30A	37034	1300	82A	37242
1400	91A	37317	1500	93A	37322	1600	223A	40015
1700	299A	40346	1800	354A	40522	1900	383A	40620
4900	102A	37350	1238	32A	37037	5000	34A	37041
1205	41A	37067	1210	47A	37114	1240	53A	37131
1220	51A	37126	1940	388A	40634	5100	57A	37136
1250	70A	37200	2200	514A	41401	5479	226A	40023
1301	84A	37245	5200	86A	37247	1305	88A	37272
1310	89A	37314	1690	283A	40256	1460	98A	37340
1450	96A	37331	5290	138A	37501	4910	104A	37352
4920	107A	37360	4930	109A	37365	4980	134A	37475
4960	126A	37446	4970	132A	37473	5300	140A	37503
1461	155A	37545	1462	169A	37606	1520	173A	37620
5400	177A	37625	1521	200A	37721	5480	228A	40027
1601	260A	40125	5482	230A	40031	5484	233A	40037
5486	235A	40044	5492	237A	40050	5494	243A	40066
5493	241A	40063	5495	254A	40115	5500	262A	40127
1602	273A	40203	1670	295A	40332	1695	297A	40341
1680	FORMAT	36673	2000	471A	41161	2040	473A	41164

Figure 44. Subroutine DATA Core Storage Map (Sheet 3 of 4)

CFACII 09/30/85 PAGE 17
38307J

STORAGE MAP

1750	302A	40355	1920	387A	40632	5560	305A	40363
5590	323A	40416	5561	307A	40365	5562	310A	40373
5563	312A	40400	5564	317A	40411	1752	342A	40467
5600	325A	40420	1751	334A	40444	100	735A	42467
1850	357A	40531	5700	360A	40536	1851	368A	40557
1852	375A	40577	1980	392A	40651	5730	394A	40654
5720	417A	40732	5740	396A	40656	5750	399A	40664
5760	401A	40671	5790	411A	40723	1983	449A	41057
5800	419A	40734	1981	431A	40775	1982	442A	41035
2050	475A	41173	2150	494A	41320	2100	490A	41271
3000	584A	41621	2160	501A	41340	4000	669A	42135
4400	704A	42322	2240	522A	41420	2250	525A	41423
2600	553A	41477	2265	534A	41444	2350	539A	41456
2270	535A	41445	2300	538A	41454	2470	546A	41467
2355	541A	41460	2450	544A	41464	2400	542A	41461
2550	551A	41475	2500	548A	41472	2650	561A	41546
2700	573A	41570	2750	576A	41604	3300	601A	41674
3050	593A	41642	3100	595A	41644	3200	599A	41664
3150	598A	41662	3460	609A	41721	3450	607A	41712
3500	614A	41726	3800	657A	42103	3700	649A	42071
3550	637A	42042	3600	639A	42044	3730	652A	42075
3750	653A	42076	3950	664A	42114	4050	672A	42144
4100	680A	42202	4200	690A	42236	4300	700A	42305
4600	714A	42355	4700	723A	42416			

DECK LENGTH IN OCTAL IS 03751.

Figure 44. Subroutine DATA Core Storage Map (Sheet 4 of 4)

```
C THERMAL ANALYSIS CONFAC PROGRAM-NASA CONTRACT NAS9-4133
C TXFRM(CONFAC II) ANALYSIS AND PROGRAMMING BY K.A.TOUPS,NAASID
C FORTRAN IV VERSION 7/31/65
      SUBROUTINE TXFRM
C THIS SUBROUTINE IS DIVIDED INTO TWO PARTS- THE FIRST SECTION TRANS-
C FORMS A SURFACE SO THAT ALL Z COORDINATES ARE ZERO,I.E.,THE SURFACE
C LIES IN THE X-Y PLANE OF THE NEW CS. THE OTHER SURFACE IS THEN ALSO
C TRANSFORMED INTO THIS SYSTEM IN  ITS PROPER POSITION RELATIVE TO THE
C FIRST SURFACE. THIS IS TERMED AN AUXILIARY TRANSFORMATION
C THE SECOND SECTION TRANSFORMS THE COORDINATES OF A GIVEN SURFACE TO
C SOME POSITION SPECIFIED BY THE TRANSFORMATION DATA POINTS. THIS IS
C TERMED A PRIMARY TRANSFORMATION.
      DIMENSION  P(3,102,21),KD(4,10 ),NNN(100,2)
      DIMENSION R(4,3),COSA(3,3),      T(3),DI(3,3),C1(4)
      INTEGER S7,SL1,SL2,SL3,SL4
      DOUBLE PRECISION X,Y,SL,VA
      COMMON X(120),Y(120),SL(4,100),VA(4,100),KC(53),AREA(53),NSN(53),
     1NSC(53),NDL(53),RX(11),RY(11),ZS(11),MP(4,102,11),PAF(11),CL(11),
     2DK(4,10),PT(3,4,10),RA(10),SP(3,10),NMS(12,12),
     3MSNOS(12),X1(61,2),Y1(61),DX(61),FH(61),FV(61),PP(3,102,21),
     4BUF(3),NOP(53),NTITLE(12,2)  ,NCIM(14),AREAX(2),NDA(6),LD(6),
     5LP(2),LI(2),SL1,SL2,SL3,SL4,NC,S7,V(3),NDM(53),
     6ND,KX,KP,NP,FAP,NHI,NHL,NVI,NVL,F,DY,AMAP,NDO,FHP(25,25),MN(100)
      EQUIVALENCE (P,PP(4)),(KD,DK),(SL,NNN),(VA,C1)
      SL2=0
      IF(SL4)305,10,28
C START OF AUXILIARY TRANSFORMATION
C THE SURFACE TO WHICH THE CS WILL BE MOVED WAS SELECTED IN CALLING PROG
C THE Z AXIS OF THE NEW CS IS THE SURFACE ORIENTATION VECTOR ERECTED
C ABOVE POINT 1 IN THE SURFACE. THE X-AXIS IS ALIGNED FROM POINT 1 TO
C POINT 2. THE Y-AXIS IS OBTAINED BY THE X-PRODUCT OF THE OTHER TWO.
 10   DO 12 M=1,3
 12   DI(M,1)=P(M,2,ND)-P(M,1,ND)
      DV=SQRT (DI(1,1)**2+DI(2,1)**2+DI(3,1)**2)                    14
      DO 13 M=1,3
C COMPUTE DIRECTION COSINES OF NEW X-AXIS RELATIVE TO OLD X-Y-Z
```

Figure 45. Subroutine TXFRM Listing (Sheet 1 of 5)

```
      COSA(1,M)=DI(M,1)/DV                                              38400380
C COMPUTE DIRECTION COSINES OF NEW Z-AXIS RELATIVE TO OLD X-Y-Z         38400390
C THE HEAD END OF THE UNIT VECTOR IS STORED AS POINT 1 IN ARRAY PP.  PP 38400400
C AND P ARE STAGGERED 1 POINT( 3 COORDINATES) THROUGH EQUIVALENCE.      38400410
 13   COSA(3,M)=PP(M,1,ND)-PP(M,2,ND)                                   38400420
C COMPUTE DIRECTION COSINES OF NEW Y-AXIS RELATIVE TO OLD X-Y-Z         38400430
C USE VECTOR CROSS OF OTHER COMPONENTS.                                 38400440
      COSA(2,1)=COSA(3,2)*COSA(1,3)-COSA(1,2)*COSA(3,3)                 38400450
      COSA(2,2)=COSA(1,1)*COSA(3,3)-COSA(3,1)*COSA(1,3)                 38400460
      COSA(2,3)=COSA(3,1)*COSA(1,2)-COSA(1,1)*COSA(3,2)                 38400470
C COMPUTE TRANSLATION COMPONENTS H,K,L MOVING OLD ORIGIN TO NEW ORIGIN  38400480
C AT POINT 1 IN SURFACE.                                                38400490
      DO 15 K=1,3                                                       38400500
 15   T(K)=-P(1,1,ND)*COSA(K,1)-P(2,1,ND)*COSA(K,2)-P(3,1,ND)*COSA(K,3) 38400510
      K1=1                                                              38400520
      K2=2                                                              38400530
      GO TO 310                                                         38400540
C START OF PRIMARY TRANSFORMATION SECTION                               38400550
C PICKUP TXFRM DATA LOCATION FROM NDL                                   38400560
28    NC=NDL(NC)                                                        38400570
C SELECT MIDDLE POINT FOR MULTIPLE USE LATER.                           38400580
      NP=KD(3,NC)                                                       38400590
C COMPUTE A FOURTH POINT FROM THE THREE COORDINATES IN SURFACE DATA,    38400600
C NECESSARILY NOT IN THE PLANE OF THE OTHER THREE. THIS POINT CORRES-   38400610
C PONDS TO THE FOURTH POINT WHICH WAS CREATED IN LIKE MANNER USING THE  38400620
C THREE POINTS GIVEN IN TRANSFORMATION DATA(SEE MAIN  PROGRAM)          38400630
      CALL UNIVEC(0,ND,KD(2,NC),NP,KD(4,NC))                            38400640    48
      R(1,1)=P(1,NP,ND)+V(1)                                            38400650
      R(1,2)=P(2,NP,ND)+V(2)                                            38400660
      R(1,3)=P(3,NP,ND)+V(3)                                            38400670
C THE FOLLOWING FUNDAMENTAL EQUATION IS SOLVED FOR THE NEW CS AXES      38400680
C DIRECTION COSINES RELATIIVE TO OLD, ALONG WITH THE TRANSLATION COMP   38400690
                                                                        38400700
C X,Y,Z=XP*COS(A1,B1,G1)+YP*COS(A2,B2,G2)+ZP*COS(A3,B3,G3)+H,K,L        38400710
                                                                        38400720
C THIS EQUATION IS WRITTEN FOUR TIMES  FORMING A 4X4 DETERMINANT, AND   38400730
C SOLVED FOR COS(A2,B2,G2) AND COS(A3,B3,G3) BY CRAMERS RULE. COS(A1,B1,38400740
```

Figure 45. Subroutine TXFRM Listing (Sheet 2 of 5)

NORTH AMERICAN AVIATION, INC.
SPACE and INFORMATION SYSTEMS DIVISION

```
C G1) IS THEN DERIVED BY THE X-PRODUCT OF THE Y-Z UNIT VECTORS(DCOSINES)38400750
C ARRAY R CONTAINS THE OLD COORDINATES,ARRAY PT CONTAINS THE NEW.       38400760
C COMPUTE DIRECTION COSINES OF NEW AXES BY MEANS OF A 4X4 DETERMINANT   38400770
C WITH 4TH COLUMN 1'S(COEFFICIENT OF TRANSLATION COMPONENT).            38400780
C WITH 4TH COLUMN 1'S(COEFFICIENT OF TRANSLATION COMPONENT).            38400790
C COMPUTE Y AND Z AXIS DCOSINES BY CRAMERS RULE                         38400800
      DO 30 I=2,4                                                       38400810
      N=KD(I,NC)                                                        38400820
      DO 30 J=1,3                                                       38400830
 30   R(I,J)=P(J,N,ND)                                                  38400840
      N=0                                                               38400850
      CD=1.                                                             38400860
C START LOOP TO COMPUTE Y AND Z DCOSINES                                38400870
 40   DO 200 I=2,3                                                      38400880
      DO 60  K=1,4                                                      38400890
C STORE THE ITH COLUMN OF R IN TEMPORARY C1                             38400900
 60   C1(K)=R(K,I)                                                      38400910
      DO 150 J=1,3                                                      38400920
C ON THE FIRST PASS, COMPUTE THE COEFFICIENT DETERMINANT FROM R.        38400930
      IF(N) 80,100,80                                                   38400940
C PLACE X,Y AND Z VALUES FOR POINTS 1-4 SUCCESSIVELY FROM PK INTO R ITH 38400950
 80   DO 90 K=1,4                                                       38400960
 90   R(K,I)=PT(J,K,NC)                                                 38400970
C COMPUTE COMMON FACTOR IN EXPANDED DETERMINANT                         38400980
 100  A= R(3,3)-R(4,3)                                                  38400990
      B= R(3,2)-R(4,2)                                                  38401000
      C= R(3,2)*R(4,3)-R(4,2)*R(3,3)                                    38401010
      D= R(3,1)-R(4,1)                                                  38401020
      E= R(3,1)*R(4,3)-R(4,1)*R(3,3)                                    38401030
      F= R(3,1)*R(4,2)-R(4,1)*R(3,2)                                    38401040
C COMPUTE COEFFICIENT DETERMINANT ON FIRST PASS, AND DIRECTION COSINES  38401050
C ON SUCCESSIVE PASSES                                                  38401060
      COSA(J,I)=  (R(1,1)*(A*R(2,2)-B*R(2,3)+C)+R(1,3)*(B*R(2,1)-D*R(2,238401070
     1)+F)-R(1,2)*(A*R(2,1)-D*R(2,3)+ E)-C*R(2,1)+E*R(2,2)-F*R(2,3))/CD 38401080
      IF(N)150,120,150                                                  38401090
 120  CD=COSA(1,2)                                                      38401100
      N=1                                                               38401110
```

Figure 45. Subroutine TXFRM Listing (Sheet 3 of 5)

```
      GO TO 40                                                          38401120
 150  CONTINUE                                                          38401130
C RESTORE ITH COLUMN OF R FROM TEMPORARY C1                             38401140
      DO 170 K=1,4                                                      38401150
 170  R(K,I)=C1(K)                                                      38401160
 200  CONTINUE                                                          38401170
C COMPUTE THE X-AXIS DCOSINES BY THE VECTOR X-PRODUCT OF YX7 DCOSINES.  38401180
      COSA(1,1)=COSA(2,2)*COSA(3,3)-COSA(2,3)*COSA(3,2)                 38401190
      COSA(2,1)=COSA(1,3)*COSA(3,2)-COSA(1,2)*COSA(3,3)                 38401200
      COSA(3,1)=COSA(1,2)*COSA(2,3)-COSA(1,3)*COSA(2,2)                 38401210
C COMPUTE TRANSLATION COMPONENTS H,L,K                                  38401220
      DO  300 I=1,3                                                     38401230
 300  T(I)=PT(I,2,NC)-R(2,1)*COSA(I,1)-R(2,2)*COSA(I,2)-R(2,3)*COSA(I,3)38401240
 305  K1=KP                                                             38401250
      K2=KP                                                             38401260
 310  DO 500  K=K1,K2                                                   38401270
 330  ND=LP(K)                                                          38401280
      IF(ND-K)332,332,334                                               38401290
 332  M=K+2                                                             38401300
      GO TO 335                                                         38401310
 334  M=K                                                               38401320
 335  NOP(M)=NOP(ND)                                                    38401330
      LP(K)=M                                                           38401340
      J2=NOP(M)+2                                                       38401350
C NEG SL4 INDICATES SURFACE ORIENTATION REVERSAL. REVERSE ORDER OF DATA 38401360
C ALSO TO AVOID MAPPING PROBLEMS IN CASE SURFACE 1 IS REVERSED.         38401370
      IF(SL4)338,450,450                                                38401380
 338  DO 339  J=1,3                                                     38401390
 339  PP(J,1,M)=PP(J,2,ND)-(PP(J,1,ND)-PP(J,2,ND))                      38401400
      J3=J2+2                                                           38401410
      DO 340  I=2,J2                                                    38401420
      DO 340  J=1,3                                                     38401430
      J4=J3-I                                                           38401440
 340  PP(J,J4,M)=PP(J,I,ND)                                             38401450
      RETURN                                                            38401460
C TRANSFORM ALL COORDINATES TO NEW CS  AND STORE IN M                   38401470
 450  DO 500 I=1,J2                                                     38401480
```

Figure 45. Subroutine TXFRM Listing (Sheet 4 of 5)

NORTH AMERICAN AVIATION, INC.
SPACE and INFORMATION SYSTEMS DIVISION

```
      CFACII                                                          09/30/85                PAGE  37
          38407J      -  EFN   SOURCE STATEMENT  -  IFN(S)  -

      DO 500 J=1,3                                                     38401490
      PP(J,I,M)=PP(1,I,ND)*COSA(J,1)+PP(2,I,ND)*COSA(J,2)+PP(3,I,ND)*  38401500
     1 COSA(J,3)+T(J)                                                  38401510
      IF(PP(J,I,M))460,500,460                                         38401520
460   IF(ABS (PP(J,I,M))-.0001)480,480,500                             38401530
480   PP(J,I,M)=0.                                                     38401540
500   CONTINUE                                                         38401550
700   RETURN                                                           38401560
      END                                                              38401570
```

Figure 45. Subroutine TXFRM Listing (Sheet 5 of 5)

CFACII 09/30/85 PAGE 82
38407J

STORAGE MAP

SUBROUTINE TXFRM

COMMON VARIABLES

COMMON BLOCK // ORIGIN 00001 LENGTH 35144

SYMBOL	LOCATION	TYPE	SYMBOL	LOCATION	TYPE	SYMBOL	LOCATION	TYPE
X	00000	D	Y	00360	D	SL	00740	D
VA	02400	D	KC	04040	I	AREA	04125	R
NSN	04212	I	NSC	04277	I	NDL	04364	I
RX	04451	R	RY	04464	R	ZS	04477	R
MP	04512	I	PAF	15322	R	CL	15335	R
DK	15350	R	PT	15420	R	RA	15610	R
SP	15622	R	NMS	15660	I	MSNOS	16100	I
X1	16114	R	Y1	16306	R	DX	16403	R
FH	16500	R	FV	16575	R	PP	16672	R
BUF	33324	R	NOP	33327	I	NTITLE	33414	I
NCIM	33444	I	AREAX	33462	R	NDA	33464	I
LD	33472	I	LP	33500	I	LI	33502	I
SL1	33504	I	SL2	33505	I	SL3	33506	I
SL4	33507	I	NC	33510	I	S7	33511	I
V	33512	R	NDM	33515	I	ND	33602	I
KX	33603	I	KP	33604	I	NP	33605	I
FAP	33606	R	NHI	33607	I	NHL	33610	I
NVI	33611	I	NVL	33612	I	F	33613	R
DY	33614	R	AMAP	33615	R	NDO	33616	I
FHP	33617	R	MN	35000	I	P	16675	R
KD	15350	I	NNN	00740	I	C1	02400	R

DIMENSIONED PROGRAM VARIABLES

SYMBOL	LOCATION	TYPE	SYMBOL	LOCATION	TYPE	SYMBOL	LOCATION	TYPE
R	35145	R	COSA	35161	R	T	35172	R
DI	35175	R						

Figure 46. Subroutine TXFRM Core Storage Map (Sheet 1 of 2)

CFACII 09/30/85 PAGE 83
38407J

STØRAGE MAP

UNDIMENSIØNED PRØGRAM VARIABLES

SYMBØL	LØCATIØN	TYPE	SYMBØL	LØCATIØN	TYPE	SYMBØL	LØCATIØN	TYPE
M	35206	I	DV	35207	R	K	35210	I
K1	35211	I	K2	35212	I	I	35213	I
N	35214	I	J	35215	I	CD	35216	R
A	35217	R	B	35220	R	C	35221	R
D	35222	R	E	35223	R	J2	35224	I
J3	35225	I	J4	35226	I			

ENTRY PØINTS

TXFRM SECTIØN 4

SUBRØUTINES CALLED

SQRT SECTIØN 5 UNIVEC SECTIØN 6 SYSLØC SECTIØN 7

EFN IFN CØRRESPØNDENCE

EFN	IFN	LØCATIØN	EFN	IFN	LØCATIØN	EFN	IFN	LØCATIØN
305	114A	36013	10	4A	35261	28	41A	35422
12	8A	35271	13	20A	35332	15	29A	35377
310	116A	36017	30	60A	35513	40	67A	35525
200	100A	35737	60	73A	35536	150	92A	35723
80	80A	35561	100	87A	35576	90	83A	35571
120	90A	35716	170	96A	35733	300	106A	35774
500	173A	36243	330	120A	36025	332	124A	36033
334	126A	36037	335	127A	36041	338	134A	36062
450	153A	36155	339	137A	36100	340	148A	36135
460	168A	36233	480	171A	36242	700	178A	36251

DECK LENGTH IN ØCTAL IS 01142.

Figure 46. Subroutine TXFRM Core Storage Map (Sheet 2 of 2)

```
C THERMAL ANALYSIS CONFAC PROGRAM-NASA CONTRACT NAS9-4133                38500010
C DOICU(CONFAC II) ANALYSIS AND PROGRAMMING BY K.A.TOUPS,NAASID           38500020
C FORTRAN IV VERSION 7/31/65                                              38500030
      SUBROUTINE DOICU                                                    38500040
C THIS SUBROUTINE DETERMINES WHETHER THE SURFACES SEE EACH OTHER IN       38500050
C WHOLE OR IN PART, AND IF IN PART, COMPUTES THE COORDINATES AND AREA OF38500060
C THE PORTION OF EACH SURFACE WHICH IS SEEN BY THE OTHER                  38500070
C FORTRAN IV VERSION 4/6/65                                               38500080
      DIMENSION  P(3,102,21),KD(4,10 ),NNN(100,2)                         38500090
      DOUBLE PRECISION X,Y,SL,VA                                          38500100
      INTEGER S7,SL1,SL2,SL3,SL4                                          38500110
      COMMON X(120),Y(120),SL(4,100),VA(4,100),KC(53),AREA(53),NSN(53),   38500120
     1NSC(53),NDL(53),RX(11),RY(11),ZS(11),MP(4,102,11),PAF(11),CL(11),   38500130
     2DK(4,10),PT(3,4,10),RA(10),SP(3,10),NMS(12,12),                     38500140
     3MSNOS(12),X1(61,2),Y1(61),DX(61),FH(61),FV(61),PP(3,102,21),        38500150
     4BUF(3),NOP(53),NTITLE(12,2)  ,NCIM(14),AREAX(2),NDA(6),LD(6),       38500160
     5LP(2),LI(2),SL1,SL2,SL3,SL4,NC,S7,V(3),NDM(53),                     38500170
     6ND,KX,KP,NP,FAP,NHI,NHL,NVI,NVL,F,DY,AMAP,NDO,FHP(25,25),MN(100)    38500180
      EQUIVALENCE (P,PP(4)),(KD,DK),(SL,NNN)                              38500190
C IF SURFACE 2 IS A SPHERE, SKIP FOLLOWING TEST                           38500200
      IF(S7 )10400,450,10400                                              38500210
450   KL=2                                                                38500220
      DO 10000 KP=1,2                                                     38500230
      SL1=0                                                               38500240
      SL2=0                                                               38500250
C IF SURFACE KP IS NONPLANAR, DO NOT CHECK BISECTION OF SURFACE KL        38500260
      JP=LD(KP)                                                           38500270
      IF(NSC(JP))9000,9000,500                                            38500280
C SELECT POSITION OF SURFACE KP IN ARRAY P                                38500290
500   JP=LP(KP)                                                           38500300
C DO LIKEWISE FOR SURFACE KL                                              38500310
      JL=LP(KL)                                                           38500320
C NP= NO.OF POINTS DEFINING  SURFACE JL                                   38500330
      NP=NOP(JL)                                                          38500340
C COMPUTE COMPONENTS OF UNIT VECTOR IN SURFACE KP                         38500350
      DXP=PP(1,1,JP)-PP(1,2,JP)                                           38500360
```

Figure 47. Subroutine DOICU Listing (Sheet 1 of 6)

```
      DYP=PP(2,1,JP)-PP(2,2,JP)                                         38500370
      DZP=PP(3,1,JP)-PP(3,2,JP)                                         38500380
      DO 6000  I=1,NP                                                   38500390
C COMPUTE COMPONENTS OF VECTOR FROM POINT 1 IN KP (UNIT VECTOR ORIGIN)  38500400
C TO POINT I IN SURFACE KL.                                             38500410
      DXL= P(1,I,JL)-P(1,1,JP)                                          38500420
      DYL= P(2,I,JL)-P(2,1,JP)                                          38500430
      DZL= P(3,I,JL)-P(3,1,JP)                                          38500440
C COMPUTE THE DOT PRODUCT RESULTING FROM UNIT VECTOR IN DP AND VECTOR   38500450
C FORMED BY THE KP UNIT VECTOR ORIGIN AND POINT I IN SURFACE KL         38500460
      CS=DXL*DXP+DYL*DYP+DZL*DZP                                        38500470
C IF THE DOT PRODUCT IS POS, GO TO SET SL1. IF 0, CONTINUE TO NEXT PT.- 38500480
C IF NEG, COMPUTE COSINE AND COMPARE WITH TOLERANCE                     38500490
      IF(CS)1000,6000,4000                                              38500500
C IF COSINE IS NEG AND GREATER THAN TOLERANCE, GO TO SET SL2            38500510
1000  IF(CS/SQRT (DXL**2+DYL**2+DZL**2)+.0001)5000,6000,6000            38500520
C SET  SL1 IF THIS POINT IS ABOVE THE REF PLANE OF SURFACE KP.          38500530    37
4000  SL1=1                                                             38500540
C IF SL2 IS ON, THEN SURFACE KL IS BISECTED BY SURFACE KP               38500550
      IF(SL2)8000,6000,8000                                             38500560
C SET  SL2 IF THIS POINT IS BELOW THE REF PLANE OF SURFACE KP.          38500570
5000  SL2=1                                                             38500580
C IF SL1 IS ON, THEN SURFACE KL IS BISECTED BY THE REF PLANE OF SURF KP 38500590
      IF(SL1)8000,6000,8000                                             38500600
 6000 CONTINUE                                                          38500610
C FLOW TO THIS POINT MEANS SURFACE KL IS NOT BISECTED BY KP.            38500620
C IF SL1 IS NOT ON, NO POINT IN KL IS ABOVE SURFACE KP REF PLANE .      38500630
      IF(SL1)9000,7000,9000                                             38500640
C NONE OF KL IS SEEN BY KP, SET FLAG TO TRIGGER DIAGNOSTICS, RETURN MP  38500650
 7000 LI(1) =0                                                          38500660
      GO TO 3600                                                        38500670
C PART OF KL IS SEEN BY KP                                              38500680
 8000 LI(KL)=-1                                                         38500690
C ALL OF KL IS SEEN BY KP (LI(KL)=1, INTIAL VALUE)                      38500700
 9000 KL=1                                                              38500710
C TEST VIEW FROM OTHER SURFACE REF PLANE                                38500720
10000 CONTINUE                                                          38500730
```

Figure 47. Subroutine DOICU Listing (Sheet 2 of 6)

NORTH AMERICAN AVIATION, INC.
SPACE and INFORMATION SYSTEMS DIVISION

```
C IF A SURFACE IS TO BE BISECTED, ALL COORDINATES ARE TRANSFORMED TO THE38500740
C REF PLANE OF THE OTHER SURFACE. THEN, THE POINT WHERE Z-COORDINATES   38500750
C CHANGE SIGN ARE DETECTED AND A NEW POINT COMPUTED WHERE Z=0. RENUMBER-38500760
C ING OF POINTS IS PERFORMED AS THE SURFACE IS REDEFINED TO EXCLUDE ALL 38500770
C NEG Z SURFACES.                                                       38500780
C                                                                       38500790
C START WITH THE REF PLANE IN SURFACE 2.                                38500800
10400 KP=2                                                              38500810
      KL=1                                                              38500820
      SL4=0                                                             38500830
11000 IF(LI(KL))12000,7000,3400                                         38500840
C SELECT POSITION OF SURFACE KP IN ARRAY P                              38500850
12000 ND=IP(KP)                                                         38500860
C PICKUP LAST POINT. POINTS 1,2 AND LAST POINT FORM REFERENCE PLANE.    38500870
      NP=NOP(ND)                                                        38500880
C IS THE REF PLANE OF SURF KP IN XY PLANE WITHIN TOLERANCE INDICATED    38500890
C FLOW TO 15000 INDICATES THE SURFACE IS NOT IN XY PLANE.               38500900
      IF( ABS (P(3, 1,ND))-.0001)13000,13000,15000                      38500910
13000 IF( ABS (P(3, 2,ND))-.0001)14000,14000,15000                      38500920
14000 IF( ABS (P(3,NP,ND))-.0001)14500,14500,15000                      38500930
C FLOW TO 15000 INDICATES ORIENTATION VECTOR IS NOT POINTING TO +Z AXIS 38500940
14500 IF(PP(3,1,ND))15000,15000,15400                                   38500950
15000 CALL TXFRM                                                        38500960
C IF SURFACE 2 IS A SPHERE, LOOK AT Z-COORDINATE FROM SURFACE 1         38500970    79
15400 IF(S7)15500,15700,15500                                           38500980
15500 N2=LD(2)                                                          38500990
15600 IN=LP(2)                                                          38501000
      JP=NDL(N2)                                                        38501010
      H=P(3,1,IN)+RA(JP)                                                38501020
15650 IF(H)7000,7000, 15655                                             38501030
15655 IF(P(3,1,IN)-RA(JP))15660,3600 ,3600                              38501040
15660 AREAX(2)=6.2831853*RA(JP)*H                                       38501050
      LI(2)=-1                                                          38501060
      GO TO 3600                                                        38501070
C CLASSES 1,2,3,4 AND PLANE 6 ONLY-SL3 FLAG SET IN MP                   38501080
15700 IF(SL3)3600,15750,3600                                            38501090
C PROCEED TO BISECT SURFACE KL IF REQUIRED                              38501100
```

Figure 47. Subroutine DOICU Listing (Sheet 3 of 6)

```
15750 IF(LI(KL))16000,7000,3400                                    38501110
C PICKUP SUBSCRIPTS OF SURFACES IN ARRAY P                         38501120
16000 JL=LP(KL)                                                    38501130
C COMPUTE LOCATION FOR BISECTED SURFACE KL                         38501140
      IF(JL-KL)17000,17000,18000                                   38501150
17000 KZ=KL+2                                                      38501160
      GO TO 19000                                                  38501170
18000 KZ=KL                                                        38501180
19000 K=0                                                          38501190
      NP=NOP(JL)                                                   38501200
C TEST Z-COORDINATES OF SURFACE KL, COMPUTE X,Y AT TRANSITION AND RENUM-38501210
C BER POINTS ABOVE HORIZON.                                        38501220
      DO 22000  M=1,NP                                             38501230
C IF Z IS POSITIVE OR ZERO,USE THE POINT.                          38501240
C IF Z FOR THIS POINT IS NEGATIVE AND THE NEXT POINT IS POS, COMPUTE 38501250
C X,Y AT THE INTERSECTION OF LINE M,M+1 AND THE XY PLANE OF THE SURF KL 38501260
      IF(P(3,M,JL).LT.0.)IF(P(3,M+1,JL))22000,22000,21000          38501270
      K=K+1                                                        38501280
      P(1,K,KZ)=P(1,M,JL)                                          38501290
      P(2,K,KZ)=P(2,M,JL)                                          38501300
      P(3,K,KZ)=P(3,M,JL)                                          38501310
C IF Z FOR THIS POINT IS POSITIVE AND THE NEXT POINT IS NEG, COMPUTE 38501320
C X,Y AT THE INTERSECTION OF LINE M,M+1 AND THE XY PLANE OF THE SURF KL 38501330
      IF(P(3,M,JL).EQ.0..OR.P(3,M+1,JL).GE.0.)GO TO 22000          38501340
21000 K=K+1                                                        38501350
C COMPUTE X,Y AT HORIZON(Z=0) FROM TRACE OF LINE SEGMENT M-M+1 ON XZ AND38501360
C YZ PLANES.                                                       38501370
      ZC=P(3,M,JL)/(P(3,M+1,JL)-P(3,M,JL))                         38501380
      DO 21500 I=1,2                                               38501390
21500 P(I,K,KZ)=P(I,M,JL)-ZC*(P(I,M+1,JL)-P(I,M,JL))               38501400
      P(3,K,KZ)=0.                                                 38501410
22000 CONTINUE                                                     38501420
      LP(KL)=KZ                                                    38501430
      NOP(KZ)=K                                                    38501440
C COMPUTE ORIENTATION UNIT VECTOR COMPONENTS FROM OLD DATA(ARRAY JL) AND38501450
C USE TO RESTORE UNIT VECTOR IN NEW ARRAY KL, AND FOR USE IN AREA COMP- 38501460
C UTATION- ADD POINT K+1 EQUAL TO POINT 1 FOR USE LATER            38501470
```

Figure 47. Subroutine DOICU Listing (Sheet 4 of 6)

```
      K=K+1                                                             38501480
      SL1=1                                                             38501490
      SL2=1                                                             38501500
      DO 32000   M=1,3                                                  38501510
      V(M)=PP(M,1,JL)-PP(M,2,JL)                                        38501520
      PP(M,1,KZ)=PP(M,2,KZ)+V(M)                                        38501530
      P(M,K,KZ)=P(M,1,KZ)                                               38501540
      IF(SL1)26000,27000,26000                                          38501550
26000 IF(ABS (V(M))-.1)27000,27000,31000                                38501560
27000 IF(SL2)29000,30000,29000                                          38501570
29000 N1=M                                                              38501580
      SL2=0                                                             38501590
      GO TO 32000                                                       38501600
30000 N2=M                                                              38501610
      GO TO 32000                                                       38501620
31000 DC=V(M)                                                           38501630
      SL1=0                                                             38501640
32000 CONTINUE                                                          38501650
C                                                                       38501660
      JP=LD(KL)                                                         38501670
      IF(NSC(JP))3600,3600,3290                                         38501680
C SAVE POINT 1                                                          38501690
 3290 P1=PP(N1,1,KZ)                                                    38501700
C PUT COORDINATE OF LAST POINT IN THIS SPOT FOR AREA COMPUTATION        38501710
      PP(N1,1,KZ)=PP(N1,K,KZ)                                           38501720
C COMPUTE PROJECTED AREA ON N1,N2 PRINCIPAL PLANE                       38501730
      DO  3300  M=2,K                                                   38501740
3300  AREAX(KL)=AREAX(KL)+PP(N2,M,KZ)*(PP(N1,M-1,KZ)-PP(N1,M+1,KZ))    38501750
C FIND PLANE AREA                                                       38501760
      AREAX(KL)=ABS (AREAX(KL)/DC/2.)                                   38501770
C RESTORE COORDINATE IN UNIT VECTOR                                     38501780
      PP(N1,1,KZ)=P1                                                    38501790
C GO TO SURFACE 2 BISECTION IF REQD                                     38501800
3400  KP=1                                                              38501810
3500  IF(KL-2)3550 ,3600 ,3600                                          38501820
3550  KL=2                                                              38501830
      GO TO 12000                                                       38501840
```

Figure 47. Subroutine DOICU Listing (Sheet 5 of 6)

NORTH AMERICAN AVIATION, INC.
SPACE and INFORMATION SYSTEMS DIVISION

```
        CFACII                                                          09/30/85          PAGE  44
            38507J     -  EFN   SOURCE STATEMENT  -  IFN(S)  -

3600    RETURN                                                          38501850
        END                                                             38501860
```

Figure 47. Subroutine DOICU Listing (Sheet 6 of 6)

CFACII 09/30/85 PAGE 84
38507J

STORAGE MAP

SUBROUTINE DOICU

COMMON VARIABLES

COMMON BLOCK // ORIGIN 00001 LENGTH 35144

SYMBOL	LOCATION	TYPE	SYMBOL	LOCATION	TYPE	SYMBOL	LOCATION	TYPE
X	00000	D	Y	00360	D	SL	00740	D
VA	02400	D	KC	04040	I	AREA	04125	R
NSN	04212	I	NSC	04277	I	NDL	04364	I
RX	04451	R	RY	04464	R	ZS	04477	R
MP	04512	I	PAF	15322	R	CL	15335	R
DK	15350	R	PT	15420	R	RA	15610	R
SP	15622	R	NMS	15660	I	MSNOS	16100	I
X1	16114	R	Y1	16306	R	DX	16403	R
FH	16500	R	FV	16575	R	PP	16672	R
BUF	33324	R	NOP	33327	I	NTITLE	33414	I
NCIM	33444	I	AREAX	33462	R	NDA	33464	I
LD	33472	I	LP	33500	I	LI	33502	I
SL1	33504	I	SL2	33505	I	SL3	33506	I
SL4	33507	I	NC	33510	I	S7	33511	I
V	33512	R	NDM	33515	I	ND	33602	I
KX	33603	I	KP	33604	I	NP	33605	I
FAP	33606	R	NHI	33607	I	NHL	33610	I
NVI	33611	I	NVL	33612	I	F	33613	R
DY	33614	R	AMAP	33615	R	NDO	33616	I
FHP	33617	R	MN	35000	I	P	16675	R
KD	15350	I	NNN	00740	I			

UNDIMENSIONED PROGRAM VARIABLES

SYMBOL	LOCATION	TYPE	SYMBOL	LOCATION	TYPE	SYMBOL	LOCATION	TYPE
KL	35145	I	JP	35146	I	JL	35147	I
DXP	35150	R	DYP	35151	R	DZP	35152	R
I	35153	I	DXL	35154	R	DYL	35155	R

Figure 48. Subroutine DOICU Core Storage Map (Sheet 1 of 2)

CFACII 09/30/85 PAGE 85
38507J

STØRAGE MAP

DZL	35156	R	CS	35157	R	N2	35160	I
IN	35161	I	H	35162	R	KZ	35163	I
K	35164	I	M	35165	I	ZC	35166	R
N1	35167	I	DC	35170	R	P1	35171	R

ENTRY PØINTS

DØICU SECTIØN 4

SUBRØUTINES CALLED

SQRT SECTIØN 5 TXFRM SECTIØN 6 SYSLØC SECTIØN 7

EFN IFN CØRRESPØNDENCE

EFN	IFN	LØCATIØN	EFN	IFN	LØCATIØN	EFN	IFN	LØCATIØN
10400	56A	35440	450	3A	35215	10000	53A	35436
9000	52A	35434	500	14A	35234	6000	45A	35420
1000	36A	35360	4000	39A	35407	5000	42A	35414
8000	50A	35427	7000	48A	35425	3600	210A	36234
11000	59A	35446	12000	62A	35451	3400	205A	36223
13000	69A	35471	15000	78A	35527	14000	72A	35503
14500	75A	35521	15400	80A	35532	15500	82A	35534
15700	98A	35576	15600	83A	35536	15650	89A	35552
15655	91A	35555	15660	95A	35565	15750	100A	35600
16000	103A	35604	17000	107A	35613	18000	109A	35617
19000	110A	35621	22000	148A	36005	21000	134A	35723
21500	141A	35762	32000	180A	36117	26000	168A	36074
27000	171A	36103	31000	178A	36114	29000	173A	36105
30000	176A	36111	3290	187A	36130	3300	194A	36175
3500	206A	36225	3550	208A	36231			

DECK LENGTH IN ØCTAL IS 01134.

Figure 48. Subroutine DOICU Core Storage Map (Sheet 2 of 2)

```
C THERMAL ANALYSIS CONFAC PROGRAM-NASA CONTRACT NAS9-4133
C MAP (CONFAC II) ANALYSIS AND PROGRAMMING BY K.A.TOUPS,NAASID,
C FORTRAN IV VERSION 7/31/65
      SUBROUTINE  MAP
C GIVEN THE COORDINATES OF THE SURFACE FROM WHICH THE FACTOR IS DESIRED,
C THIS SUBROUTINE COMPUTES THOSE POINTS ON THE SURFACE FROM WHICH THE
C PLANE POINT FACTOR TO THE RECEIVING SURFACE WILL BE COMPUTED.
      DIMENSION  P(3,102,21),KD(4,10 ),  N(100,2)
      DOUBLE PRECISION X,Y,SL,VA
      INTEGER S7,SL1,SL2,SL3,SL4
      COMMON X(120),Y(120),SL(4,100),VA(4,100),KC(53),AREA(53),NSN(53),
     1NSC(53),NDL(53),RX(11),RY(11),ZS(11),MP(4,102,11),PAF(11),CL(11),
     2DK(4,10),PT(3,4,10),RA(10),SP(3,10),NMS(12,12),
     3MSNOS(12),X1(61,2),Y1(61),DX(61),FH(61),FV(61),PP(3,102,21),
     4BUF(3),NOP(53),NTITLE(12,2)  ,NCIM(14),AREAX(2),NDA(6),LD(6),
     5LP(2),LI(2),SL1,SL2,SL3,SL4,NC,S7,V(3),NDM(53),
     6ND,KX,KP,NP,FAP,NHI,NHL,NVI,NVL,F,DY,AMAP,NDO,FHP(25,25),MN(100)
      EQUIVALENCE (P,PP(4)),(KD,DK),(SL,N)
C SET UP HORIZONTAL AND VERTICAL INCREMENTS
C CONVERT INCREMENT NO INTO NO OF INCREMENTS
      IF(LD(5)-11)20,10,20
10    NHI=2
      GO TO 30
20    NHI=LD(5)*6
30    NHL=NHI+1
      IF(LD(6)-11)50,40,50
40    NVI=2
      GO TO 60
50    NVI=LD(6)*6
60    NVL=NVI+1
 90   ND=LP(1)
      NP=NOP(ND)
C DETERMINE THE SUBSCRIPTS OF THE COORDINATES HAVING THE MIN AND THE MAX
C VALUE OF Y.
      YMIN=1.E+30
      YMAX=-1.E+30
```

Figure 49. Subroutine MAP Listing (Sheet 1 of 4)

```
      DO 200 K=1,NP                                                     38600370
      IF(P(2,K,ND)-YMIN)110,110,120                                     38600380
 110  YMIN=P(2,K,ND)                                                    38600390
      MY=K                                                              38600400
 120  IF(P(2,K,ND)-YMAX)200,200,175                                     38600410
 175  YMAX=P(2,K,ND)                                                    38600420
      MX = K                                                            38600430
 200  CONTINUE                                                          38600440
      N(1,1)=MY                                                         38600450
      N(1,2)=MY                                                         38600460
C STARTING FROM YMIN, AND MOVING TOWARD YMAX CLOCKWISE, STORE SUBSCRIPTS38600470
C OF POINTS IN ARRAY P DEFINING THE SURFACE INTO THE ARRAY N(  ,1). DO  38600480
C THE SAME FOR POINTS ON THE RIGHT COUNTERCLOCKWISE ,BUT STORE IN N( ,2)38600490
 220  I1=-1                                                             38600500
 225  DO 300 I=1,2                                                      38600510
      DO 290   J=2,NP                                                   38600520
      N(J,I)=N(J-1,I)+I1                                                38600530
      IF(I1)245,260,230                                                 38600540
C IF THE LAST POINT IS ENCOUNTERED BEFORE YMAX, 1 IS THE NEXT POINT     38600550
230   IF(N(J,I).GT.NP)N(J,I)=1                                          38600560
      GO TO 260                                                         38600570
C IF POINT 1 IS ENCOUNTERED PRIOR TO YMAX, THE LAST POINT IS THE NEXT   38600580
C POINT                                                                 38600590
245   IF(N(J,I).EQ.0)N(J,I)=NP                                          38600600
C GO TO THE OTHER SIDE IF YMAX IS ENCOUNTERED                           38600610
  260 IF(N(J,I)-MX)290,295,290                                          38600620
  290 CONTINUE                                                          38600630
 295  I1=1                                                              38600640
C THE FOLLOWING MANEUVER PREVENTS DIFFICULTIES IN MAPPING THE TOPMOST   38600650
C LINES OF THE SURFACE.                                                 38600660
      N(J+1,I)=MX                                                       38600670
      N(J+2,I)=MX                                                       38600680
  300 CONTINUE                                                          38600690
C THE FOLLOWING INSTRUCTIONS COMPUTE THE POINTS OF INTERSECTION OF EACH 38600700
C HORIZONTAL GRID LINE AND THE LINE SEGMENTS FORMING THE SURF BOUNDARY  38600710
C COMPUTE THE VERTICAL INCREMENT                                        38600720
 390  DY=(YMAX-YMIN)/FLOAT (NVI)                                        38600730
```

Figure 49. Subroutine MAP Listing (Sheet 2 of 4)

```
      Y1(1)=YMIN                                                        38600740
C COMPUTE THE HORIZONTAL GRID LINES                                     38600750
      Y1(NVL)=YMAX                                                      38600760
      DO 400  I=2,NVI                                                   38600770
  400 Y1(I)=Y1(I-1)+DY                                                  38600780
C COMPUTE VALUE OF TOLERANCE FOR USE IN MAPPING SURFACE 1.              38600790
      DT=.01*DY                                                         38600800
C STARTING WITH THE LEFT BOUNDARY, COMPUTE THE INTERSECTION OF HORZ     38600810
C GRID LINES AND LINE SEGMENTS FORMING BOUNDARY OF SURFACE 1.           38600820
      DO 700 I=1,2                                                      38600830
C SET MAPPING LINE COUNTER                                              38600840
      K=1                                                               38600850
C SET UP LOOP TO DETERMINE INTERSECTION OF MAPPING LINE WITH BOUNDARY   38600860
C LINE SEGMENT J1-J2                                                    38600870
      DO 690 J=1,NP                                                     38600880
      J1=N(J,I)                                                         38600890
      J2=N(J+1,I)                                                       38600900
      J3=N(J+2,I)                                                       38600910
      YD=P(2,J2,ND)-P(2,J1,ND)                                          38600920
      IF(YD)2000,440,3000                                               38600930
C IF Y-COORDINATE OF J2 IS LESS THAN J1,THIS SURFACE CANNOT BE MAPPED   38600940
 2000 IF(DT-ABS(YD))2200,3000,3000                                      38600950
 2200 WRITE(6,3500)J1,J2                                                38600960    92
 3500 FORMAT(99H0DIFFICULTY IN MAPPING SURFACE 1 HAS BEEN ENCOUNTERED-A 38600970
     1MAPPING LINE CROSSES SURFACE 1 BOUNDARY AT  / 36H MORE THAN TWO P038600980
     2INTS. LINE ELEMENT  I2,1H-I2,56H CANNOT BE REACHED WITHOUT CROSSIN38600990
     3G A PRECEDING ELEMENT./66H THIS SURFACE MUST BE REARRANGED BEFORE 38601000
     4IT CAN BE PROPERLY MAPPED./ 39H THE FORM FACTOR IS PROBABLY INCORR38601010
     5ECT.)                                                             38601020
 3000 SLI=(P(1,J2,ND)-P(1,J1,ND))/YD                                    38601030
C IS THE POINT J2 NEAR THE MAPPING LINE WITHIN THE TOLERANCE DT-YES,460-38601040
C NO,560                                                                38601050
 440  PD=Y1(K)-P(2,J2,ND)                                               38601060
      IF(ABS (PD)-DT)460,460,560                                        38601070
C IF THE MAPPING LINE IS BELOW THE POINT J2, COMPUTE THE VALUE OF X AT  38601080
C THE INTERSECTION OF LINE J1-J2 AND THE MAPPING LINE(600)              38601090
C IF THE MAPPING LINE IS ABOVE THE POINT J2, CONTINUE J-LOOP TO SELECT  38601100
```

Figure 49. Subroutine MAP Listing (Sheet 3 of 4)

```
C NEXT LINE SEGMENT BUT DO NOT SELECT A NEW MAPPING LINE(690)
 560  IF(PD)600,690,690
C COMPUTE X , GO TO NEXT MAPPING LINE BUT USE SAME BOUNDARY LINE SEGMENT
 600  X1(K,I)=P(1,J1,ND)+(Y1(K)-P(2,J1,ND))*SLI
      K=K+1
      GO TO 440
C IS THE NEXT POINT (J3) ALSO NEAR THE MAPPING LINE -YES,480-NO,540
 460  IF(ABS (Y1(K)-P(2,J3,ND))-DT)480,480,540
C IF J3 IS NOT THE OUTERMOST POINT, CONTINUE J-LOOP WITH SAME MAP LINE.
C IF J3 IS THE OUTERMOST POINT, USE POINT AND SELECT NEXT MAPPING LINE.
C IF THE X-VALUES ARE EQUAL, USE J2 AND SELECT NEXT MAPPING LINE IF ANY.
 480  IF(P(1,J2,ND)-P(1,J3,ND))500,540,520
 500  GO TO(540,690),I
 520  GO TO(690,540),I
 540  X1(K,I)=P(1,J2,ND)
      IF(K-NVL)680,700,700
C GO TO NEXT MAPPING LINE AND NEXT BOUNDARY LINE SEGMENT
 680  K=K+1
 690  CONTINUE
 700  CONTINUE
 800  HNI=NHI
      AR=0.
C COMPUTE THE MAPPING AREA
      DO 840 K=1,NVL
      DXL=X1(K,2)-X1(K,1)
      AR=AR+DXL
 840  DX(K)=DXL/HNI
      AMAP   =(AR -(DXL +X1(1,2)-X1(1,1))/2.)*DY
      RETURN
      END
```

Figure 49. Subroutine MAP Listing (Sheet 4 of 4)

CFACII 09/30/85 PAGE 86
38607J

STORAGE MAP

SUBROUTINE MAP

COMMON VARIABLES

COMMON BLOCK // ORIGIN 00001 LENGTH 35144

SYMBOL	LOCATION	TYPE	SYMBOL	LOCATION	TYPE	SYMBOL	LOCATION	TYPE
X	00000	D	Y	00360	D	SL	00740	D
VA	02400	D	KC	04040	I	AREA	04125	R
NSN	04212	I	NSC	04277	I	NDL	04364	I
RX	04451	R	RY	04464	R	ZS	04477	R
MP	04512	I	PAF	15322	R	CL	15335	R
DK	15350	R	PT	15420	R	RA	15610	R
SP	15622	R	NMS	15660	I	MSNOS	16100	I
X1	16114	R	Y1	16306	R	DX	16403	R
FH	16500	R	FV	16575	R	PP	16672	R
BUF	33324	R	NOP	33327	I	NTITLE	33414	I
NCIM	33444	I	AREAX	33462	R	NDA	33464	I
LD	33472	I	LP	33500	I	LI	33502	I
SL1	33504	I	SL2	33505	I	SL3	33506	I
SL4	33507	I	NC	33510	I	S7	33511	I
V	33512	R	NDM	33515	I	ND	33602	I
KX	33603	I	KP	33604	I	NP	33605	I
FAP	33606	R	NHI	33607	I	NHL	33610	I
NVI	33611	I	NVL	33612	I	F	33613	R
DY	33614	R	AMAP	33615	R	NDO	33616	I
FHP	33617	R	MN	35000	I	P	16675	R
KD	15350	I	N	00740	I			

UNDIMENSIONED PROGRAM VARIABLES

SYMBOL	LOCATION	TYPE	SYMBOL	LOCATION	TYPE	SYMBOL	LOCATION	TYPE
YMIN	35145	R	YMAX	35146	R	K	35147	I
MY	35150	I	MX	35151	I	I1	35152	I
I	35153	I	J	35154	I	DT	35155	R

Figure 50. Subroutine MAP Core Storage Map (Sheet 1 of 2)

```
CFACII                                                                  09/30/85                PAGE  87
    38607J                                        STØRAGE  MAP

J1          35156        I        J2          35157        I        J3          35160        I
YD          35161        R        SLI         35162        R        PD          35163        R
HNI         35164        R        AR          35165        R        DXL         35166        R

                                                  ENTRY PØINTS

MAP          SECTIØN     4

                                                  SUBRØUTINES CALLED

.FWRD.       SECTIØN     5        .FXEM.       SECTIØN     6        .UN06.       SECTIØN     7
.FFIL.       SECTIØN     8        .FCNV.       SECTIØN     9        E.1          SECTIØN     10
E.2          SECTIØN     11       E.3          SECTIØN     12       E.4          SECTIØN     13
CC.1         SECTIØN     14       CC.2         SECTIØN     15       CC.3         SECTIØN     16
CC.4         SECTIØN     17       SYSLØC       SECTIØN     18

                                          EFN   IFN   CØRRESPØNDENCE

EFN          IFN          LØCATIØN     EFN          IFN          LØCATIØN     EFN          IFN          LØCATIØN
20           5A           35310        10           3A           35305        30           6A           35313
50           11A          35324        40           9A           35321        60           12A          35327
90           13A          35332        200          29A          35402        110          22A          35366
120          24A          35372        175          27A          35376        220          32A          35411
225          33A          35413        300          62A          35503        290          56A          35466
245          48A          35456        260          53A          35463        230          42A          35447
295          58A          35470        390          65A          35507        400          70A          35535
700          125A         36104        690          123A         36102        2000         90A          35627
440          96A          35675        3000         93A          35647        2200         92A          35635
3500         FØRMAT       35213        460          108A         35762        560          100A         35721
600          102A         35724        480          112A         36006        540          118A         36052
500          116A         36034        520          117A         36043        680          122A         36077
800          128A         36106        840          134A         36131
  DECK LENGTH IN ØCTAL IS      01035.
```

Figure 50. Subroutine MAP Core Storage Map (Sheet 2 of 2)

```
C THERMAL ANALYSIS CONFAC PROGRAM-NASA CONTRACT NAS9-4133
C FACTOR(CONFAC II)ANALYSIS AND PROGRAMMING BY K.A.TOUPS,NAASID
C FORTRAN IV VERSION 7/31/65
      SUBROUTINE FACTOR
C THIS SUBROUTINE COMPUTES CONFIGURATION FACTORS FROM POINTS ON SURF 1
C TO SURFACE 2 BY A METHOD USING THE UNIT SPHERE. THE FORM FACTOR FROM
C SURFACE 1 TO 2 IS COMPUTED BY INTEGRATION OF ALL CONFIGURATION FACTORS
C TO YIELD THE AREA-WEIGHTED MEAN.  TRAPEZOIDAL INTEGRATION IS USED.
      DIMENSION  P(3,102,21),KD(4,10 ),NNN(100,2),C1(102),C2(102),
     1C3(102),XP(120),YP(120)
      DOUBLE PRECISION X,Y,SL,VA
      INTEGER S7,SL1,SL2,SL3,SL4
      COMMON X(120),Y(120),SL(4,100),VA(4,100),KC(53),AREA(53),NSN(53),
     1NSC(53),NDL(53),RX(11),RY(11),ZS(11),MP(4,102,11),PAF(11),CL(11),
     2DK(4,10),PT(3,4,10),RA(10),SP(3,10),NMS(12,12),
     3MSNOS(12),X1(61,2),Y1(61),DX(61),FH(61),FV(61),PP(3,102,21),
     4BUF(3),NOP(53),NTITLE(12,2)  ,NCIM(14),AREAX(2),NDA(6),LD(6),
     5LP(2),LI(2),SL1,SL2,SL3,SL4,NC,S7,V(3),NDM(53),
     6ND,KX,KP,NP,FAP,NHI,NHL,NVI,NVL,F,DY,AMAP,NDO,FHP(25,25),MN(100)
      EQUIVALENCE (P,PP(4)),(KD,DK),(SL,NNN),(VA,C1),(VA(4,26),C2),
     1(VA(4,52),C3),(X,XP),(Y,YP)
      F=0.
      J1 =LD(1)
C LOCATE THE ARRAY CONTAINING THE FINAL COORDINATES OF SURFACE 2.
      J2=LP(2)
C NP=NO. OF POINTS DEFINING SURFACE 2
      NP=NOP(J2)
      ML=NP+1
C COMPUTE A CONSTANT IN Z OF SURFACE 2  FOR LATER COMPUTATION OF VECTOR
C DOT PRODUCT
      DO 860 J=1,NP
 860  C1(J)=P(3,J,J2)*P(3,J+1,J2)
C START WITH LOWEST HORIZONTAL GRID LINE, MOVING UP TO YMAX
      DO 1000 K=1,NVL
      FV(K)=0.
C LOCATE THE POINTSFROM WHICH THE PLANE POINT FACTOR WILL BE COMPUTED-
```

Figure 51. Subroutine FACTOR Listing (Sheet 1 of 4)

```
      DO 890 J=1,ML                                                     38700380
C START AT LEFT BOUNDARY OF SURFACE1 AND MOVE TO RIGHT(CONSTANT Y)      38700390
      XP(J)=P(1,J,J2)-X1(K,1)                                           38700400
      YP(J)=P(2,J,J2)-Y1(K)                                             38700410
C ZERO OUT COMPUTATIONAL ERROR                                          38700420
      IF(ABS(XP(J)) .LE. 1.E-6)XP(J)=0.                                 38700430
      IF(ABS(YP(J)) .LE. 1.E-6)YP(J)=0.                                 38700440
 890  CONTINUE                                                          38700450
C COMPUTE THE PART OF THE VECTOR CROSS  PRODUCT INVARIANT FOR EACH HORZ 38700460
C GRID LINE (CONSTANT Y AND Z)                                          38700470
      DO 900 J=1,NP                                                     38700480
C COMPUTE FUNCTION OF SINE OF ANGLE FORMED BY J,J+1 IN SURFACE 2.       38700490
      C2(J)=(YP(J)*P(3,J+1,J2)- YP(J+1)*P(3,J,J2))**2                   38700500
 900  C3(J)= YP(J)*YP(J+1)                                              38700510
C COMPUTE PLANE POINT FACTOR FUNCTION FOR EACH INCREMENT OF X ALONG GRID38700520
      DO 987 I=1,NHL                                                    38700530
  930 FH(I)=0.                                                          38700540
      DO 980 J=1,NP                                                     38700550
      ANG=0.                                                            38700560
      FS1= C2(J)+(XP(J)*P(3,J+1,J2)-XP(J+1)*P(3,J,J2))**2               38700570
C THIS X-PRODUCT IN X,Y REVEALS THE PROJECTED AREA OF THE TRIANGLE      38700580
C ORIGIN,J,J+1 ON THE X-Y PLANE                                         38700590
      FS2= XP(J)*YP(J+1)-XP(J+1)*YP(J)                                  38700600
C IF THE PROJECTED AREA IS NOT ZERO, PROCEED TO COMPUTE THE PROJECTED   38700610
C AREA FUNCTION OF THE CIRCULAR SECTOR FORMED BY THE TRIANGLE AND UNIT  38700620
C SPHERE                                                                38700630
      IF(FS2)950,910,950                                                38700640
C IF Z-S ARE ZERO, THE ORIGIN LIES ALONG THE EXTENDED LINE OR WITHIN THE38700650
C LINE SEGMENT (A BOUNDARY OF SURFACE 2 LIES ON SURFACE 1)              38700660
C IS THE ORIGIN ON THE LINE SEGMENT ENDS,SOMEWHERE BETWEEN,OR ON AN     38700670
C EXTENSION                                                             38700680
910   IF(P(3,J,J2) .NE. 0. .OR. P(3,J+1,J2) .NE. 0.) GO TO 980          38700690
 936  IF(XP(J)*XP(J+1))945,937,980                                      38700700
 937  IF(YP(J)*YP(J+1))945,940,980                                      38700710
C IF PRECISELY ON THE END OF THE LINE SEGMENT, ADD PI/2  SO THAT THE    38700720
C FINAL RESULT WILL REFLECT THE VALUE APPROACHING THE END, RATHER THAN  38700730
C ZERO                                                                  38700740
```

Figure 51. Subroutine FACTOR Listing (Sheet 2 of 4)

```
 940  FH(I)=FH(I)+1.5707963                                          38700750
      GO TO 980                                                      38700760
C IF SOMEWHERE BETWEEN THE ENDS, ADD PI   SO THAT THE FINAL RESULT WILL 38700770
C BE THE FACTOR APPROACHING THE BOUNDARY                             38700780
 945  FH(I)=FH(I)+3.1415927                                          38700790
      GO TO 980                                                      38700800
C COMPUTE THE CROSS PRODUCT OF VECTORS TO POINTS DEFINING LINE SEGMENT 38700810
 950  FS3=SQRT (FS1+FS2**2)                                          38700820
C COMPUTE THE COSINE OF ANGLE BETWEEN THE CIRCULAR SECTOR AND X-Y PLANE 38700830
C (K-COMPONENT OF X-PRODUCT )                                        38700840    88
      CSG=FS2/FS3                                                    38700850
C COMPUTE THE DOT PRODUCT SAME VECTORS                               38700860
      FCS = XP(J)*XP(J+1)+C3(J)+ C1(J)                               38700870
C COMPUTE THE ANGLE BETWEEN VECTOR IN RADIANS                        38700880
      IF(FCS)960,965,970                                             38700890
 960  ANG=3.1415927                                                  38700900
      GO TO 970                                                      38700910
 965  FH(I)=FH(I)-1.5707963*CSG                                      38700920
      GO TO 980                                                      38700930
 970  FH(I)=FH(I)-(A  TAN (FS3/FCS)+ANG)*CSG                         38700940    101
 980  CONTINUE                                                       38700950
C A NEG AREA RESULTS WHEN THE ORDER OF COMPUTATION REVERSES(THE BACKSIDE38700960
C OF SURFACE 2 IS VIEWED). THIS MAY BE DELIBERATED INDUCED FROM THE  38700970
C RECONSTRUCTION OF A BISECTED NONPLANAR SURFACE,TXFRM ROUNDOFF, OR BY A38700980
C SURFACE WHICH SHOULD BE BUT IS NOT QUITE PLANAR                    38700990
      IF(FH(I))903,986,986                                           38701000
903   IF(FH(I)+.0001)904,985,985                                     38701010
904   FH(I)=FH(I)+6.2831853                                          38701020
      GO TO 986                                                      38701030
985   FH(I)=0.                                                       38701040
C IF A DETAILED PRINTOUT WAS REQUESTED, COMPUTE THE POINT FACTOR     38701050
 986  IF(NDO)971,984,971                                             38701060
 971  IF(I-25)500,500,984                                            38701070
 500  IF(K-25)520,520,984                                            38701080
 520  FHP(I,K)=FH(I)/6.2831853                                       38701090
C IF THE LAST POINT ON THE LINE IS REACHED, USE THE MAP BOUNDARY VALUE 38701100
C FOR THE POINT TO AVOID ERROR BUILDUP IN X                          38701110
```

Figure 51. Subroutine FACTOR Listing (Sheet 3 of 4)

```
 984  IF(I-NHI)972,973,988                                          38701120
 973  DO 974 J=1,ML                                                 38701130
      XP(J)=P(1,J,J2)-X1(K,2)                                       38701140
C MAKE NEAR ZERO VALUES ZERO                                        38701150
      IF(ABS (XP(J))-1.E-6)964,964,974                              38701160
 964  XP(J)=0.                                                      38701170
 974  CONTINUE                                                      38701180
      GO TO 987                                                     38701190
C MOVE THE ORIGIN(THE POSITION OF THE POINT RELATIVE TO SURFACE 2) TO 38701200
C THE RIGHT AN INCREMENT AND CONTINUE                               38701210
 972  DO 975 J=1,ML                                                 38701220
  975 XP(J)=XP(J)-DX(K)                                             38701230
 987  CONTINUE                                                      38701240
C INTEGRATE THE FUNCTION FH ALONG THE HORIZONTAL GRID               38701250
 988  DO 990 I=2,NHI                                                38701260
 990  FV(K)= FV(K)+FH(I)                                            38701270
      FV(K)=(FV(K)+(FH(1)+FH(NHL))/2.)*DX(K)                        38701280
 1000 CONTINUE                                                      38701290
C INTEGRATE THE FUNCTION FV ALONG THE VERTICAL. DIVIDE BY 2 TO CONVERT 38701300
C FH TO AREA, BY PI TO CONVERT THIS TO A CONFIGURATION FACTOR, AND BY 38701310
C THE MAPPING AREA TO YIELD THE FORM FACTOR.                        38701320
      DO 1050 K=2,NVI                                               38701330
  1050 F=F+FV(K)                                                    38701340
      F=ABS (F+(FV(1)+FV(NVL))/2.)*DY/ AMAP   /6.2831853            38701350
C IF A PART OF SURFACE 1 IS SHADOWED, THE FACTOR MUST BE REDUCED TO 38701360
C REFLECT THIS.                                                     38701370
      IF(LI(1) )1060,1500,1500                                      38701380
 1060 F =F * AREAX(1)/AREA(J1 )                                     38701390
C COMPUTE THE FACTOR X AREA PRODUCT                                 38701400
1500  FAP=F*AREA(J1 )                                               38701410
 2000 RETURN                                                        38701420
      END                                                           38701430
```

Figure 51. Subroutine FACTOR Listing (Sheet 4 of 4)

CFACII 09/30/85 PAGE 88
38707J

STØRAGE MAP

SUBRØUTINE FACTØR

CØMMØN VARIABLES

COMMON BLOCK // ØRIGIN 00001 LENGTH 35144

SYMBØL	LØCATIØN	TYPE	SYMBØL	LØCATIØN	TYPE	SYMBØL	LØCATIØN	TYPE
X	00000	D	Y	00360	D	SL	00740	D
VA	02400	D	KC	04040	I	AREA	04125	R
NSN	04212	I	NSC	04277	I	NDL	04364	I
RX	04451	R	RY	04464	R	ZS	04477	R
MP	04512	I	PAF	15322	R	CL	15335	R
DK	15350	R	PT	15420	R	RA	15610	R
SP	15622	R	NMS	15660	I	MSNØS	16100	I
X1	16114	R	Y1	16306	R	DX	16403	R
FH	16500	R	FV	16575	R	PP	16672	R
BUF	33324	R	NØP	33327	I	NTITLE	33414	I
NCIM	33444	I	AREAX	33462	R	NDA	33464	I
LD	33472	I	LP	33500	I	LI	33502	I
SL1	33504	I	SL2	33505	I	SL3	33506	I
SL4	33507	I	NC	33510	I	S7	33511	I
V	33512	R	NDM	33515	I	ND	33602	I
KX	33603	I	KP	33604	I	NP	33605	I
FAP	33606	R	NHI	33607	I	NHL	33610	I
NVI	33611	I	NVL	33612	I	F	33613	R
DY	33614	R	AMAP	33615	R	NDØ	33616	I
FHP	33617	R	MN	35000	I	P	16675	R
KD	15350	I	NNN	00740	I	VA	02400	D
C1	02400	R	C2	02713	R	C3	03233	R
XP	00000	R	YP	00360	R			

UNDIMENSIØNED PRØGRAM VARIABLES

SYMBØL	LØCATIØN	TYPE	SYMBØL	LØCATIØN	TYPE	SYMBØL	LØCATIØN	TYPE
J1	35145	I	J2	35146	I	ML	35147	I

Figure 52. Subroutine FACTOR Core Storage Map (Sheet 1 of 2)

```
CFACII                                                                  09/30/85                PAGE  89
   387C7J                                        STØRAGE  MAP

K          35150      I      I          35151      I      ANG        35152      R
FS1        35153      R      FS2        35154      R      FS3        35155      R
CSG        35156      R      FCS        35157      R

                                        ENTRY PØINTS

FACTØR     SECTIØN    4

                                        SUBRØUTINES CALLED

SQRT       SECTIØN    5        ATAN      SECTIØN    6        SYSLØC     SECTIØN    7

                                   EFN   IFN   CØRRFSPØNDENCE

EFN        IFN        LØCATIØN   EFN        IFN        LØCATIØN   EFN        IFN        LØCATIØN
860        10A        35227      1000       163A       35676      890        36A        35352
900        45A        35371      987        149A       35652      930        52A        35415
980        104A       35562      950        87A        35510      910        66A        35457
936        71A        35466      945        83A        35504      937        75A        35473
940        79A        35500      960        94A        35534      965        96A        35537
970        100A       35545      903        108A       35570      986        117A       35601
904        111A       35574      985        115A       35600      971        119A       35603
984        126A       35616      500        121A       35607      520        123A       35613
972        141A       35644      973        128A       35623      988        151A       35654
974        138A       35640      964        136A       35637      975        144A       35645
990        154A       35661      1050       169A       35704      1060       175A       35733
1500       177A       35740      2000       179A       35744
  DECK LENGTH IN ØCTAL IS     00626.
```

Figure 52. Subroutine FACTOR Core Storage Map (Sheet 2 of 2)

```
C THERMAL ANALYSIS CONFAC PROGRAM-NASA CONTRACT NAS9-4133
C SILFAC(CONFAC II)ANALYSIS AND PROGRAMMING BY K.A.TOUPS,NAASID
C FORTRAN IV VERSION 7/31/65
      SUBROUTINE SILFAC
C THIS SUBROUTINE DETERMINES THE SILHOUETTE OF SURFACE 2 FROM SELECTED
C POINTS ON SURFACE 1, COMPUTES A CONFIGURATION FACTOR FOR EACH POINT
C AND FINALLY THE FORM FACTOR FROM SURFACE 1 TO SURFACE 2.
      DIMENSION P(3,102,21),KD(4,10),NNN(100,2),XP(2,120),YP(2,120),
     1NCP(10),NS(120),NJM(20),YI(4,100),NI(100),NJ(100),XV(2),YV(2),
     2DXI(100),NA(1)
      INTEGER S7,SL1,SL2,SL3,SL4,SL5,SL6
      DOUBLE PRECISION X,Y,SL,VA,YI,DXI,DYY,DXX,YMIN,XYMIN,XO,X2,CD ,XM,
     1YM,XA,YA,XB,XC,XD,XE,XF,XG,XMIN,YU,YL,TOLA,TOLX,TOLY,TOL1,TOL2,TOL
     23,TOL4,XNO,TOLNPP,TOLNLP
      COMMON X(120),Y(120),SL(4,100),VA(4,100),KC(53),AREA(53),NSN(53),
     1NSC(53),NDL(53),RX(11),RY(11),ZS(11),MP(4,102,11),PAF(11),CL(11),
     2DK(4,10),PT(3,4,10),RA(10),SP(3,10),NMS(12,12),
     3MSNOS(12),X1(61,2),Y1(61),DX(61),FH(61),FV(61),PP(3,102,21),
     4BUF(3),NOP(53),NTITLE(12,2)  ,NCIM(14),AREAX(2),NDA(6),LD(6),
     5LP(2),LI(2),SL1,SL2,SL3,SL4,NC,S7,V(3),NDM(53),
     6ND,KX,KP,NP,FAP,NHI,NHL,NVI,NVL,F,DY,AMAP,NDO,FHP(25,25),MN(100)
      EQUIVALENCE (P,PP(4)),(KD,DK),(SL,NNN),(X,XP),(Y,YP)
      SL1=1
      SL5=1
      NCAM=0
      TOLA=1.D-8
      F=0.
C PICKUP LOCATION OF SURFACE 1 NAME
      J1 =LD(1)
C PICKUP LOCATION OF SURFACE 2 NAME
      N2=LD(2)
C PICKUP PRESENT LOCATION OF SURFACE 2 DATA
      IN=LP(2)
C PICKUP NO OF POINTS DEFINING SURFACE  2
      NP=NOP(IN)
C PICKUP LOCATION OF CONNECTIONS DATA
```

Figure 53. Subroutine SILFAC Listing (Sheet 1 of 15)

```
      ID=KC(N2)                                                         38800380
      NA(1)=NP                                                          38800390
C IF SURFACE 2 IS BELOW CLASS 7, USE SIMPLE MODE OF SILHOUETTE ANALYSIS 38800400
      NX=0                                                              38800410
C IF CLASS 7, SET NX AND COMPUTE FACTOR FROM CLOSED FORM SOLUTION       38800420
C IF CLASS 8, USE COMPLEX MODE                                          38800430
      IF(NSC(N2)+7)29700,29000,29800                                    38800440
29000 N=1                                                               38800450
      NX=-1                                                             38800460
      FD=1.                                                             38800470
C PICKUP ORIGINAL LOCATION  OF SPHERE DATA                              38800480
      ND=NDL(N2)                                                        38800490
      IF(P(3,1,IN)-RA(ND))29050,29200,29200                             38800500
29050 IF(P(3,1,IN))29100,29100,29150                                    38800510
29100 NX=-3                                                             38800520
      GO TO 29160                                                       38800530
29150 NX=-2                                                             38800540
29160 FD=3.14159265                                                     38800550
29200 ZSQ=P(3,1,IN)**2                                                  38800560
      RSQ=RA(ND)**2                                                     38800570
      RSQZ=RSQ*P(3,1,IN)                                                38800580
      RSMZS=ABS (RSQ-ZSQ)                                               38800590
      GO TO 31000                                                       38800600
29700 NX=1                                                              38800610
29800 FD=6.28318531                                                     38800620
31000 DO 1000 NV=1,NVL                                                  38800630
31500 FV(NV)=0.                                                         38800640
31550 IF(NX)29250,29900,29900                                           38800650
C COMPUTE SPHERE Y-CONSTANT                                             38800660
29250 YSPZS=(P(2,1,IN)-Y1(NV))**2+ZSQ                                   38800670
      X=P(1,1,IN)-X1(NV,1)                                              38800680
      DXI=DX(NV)                                                        38800690
      GO TO 12100                                                       38800700
C INITIALIZE YMIN AND XYMIN FOR SELECTION OF LOWEST ,LEFTMOST POINT AS  38800710
C FIRST POINT ON SILHOUETTE                                             38800720
29900 YMIN=1.E+38                                                       38800730
      XYMIN=1.E+38                                                      38800740
```

Figure 53. Subroutine SILFAC Listing (Sheet 2 of 15)

```
C TRANSFORM POINT  J OF SURFACE 2 TO THE Z=1 PLANE TO DEVELOP THE       38800750
C SILHOUETTE AS SEEN FROM THE PRESENT ORIGIN IN SURFACE 1.              38800760
      DO 12000 J=1,NP                                                   38800770
C IF Z IS ZERO OR NEG,SET TO SMALL POSITIVE Z SO THAT  SILHOUETTE COMP  38800780
C MAY PROCEED. WARN USER OF THIS CONDITION                              38800790
      IF(P(3,J,IN))6900,6900,6950                                       38800800
6900  DZ=0.05                                                           38800810
      IF(SL5)6960,7000,6960                                             38800820
6960  SL5=0                                                             38800830
      WRITE(6,6970)NDA(2),NDA(4),NDA(1),NDA(3)                          38800840    62
6970  FORMAT(80HOWARNING---ONE OR MORE ZERO OR NEGATIVE Z-COORDINATES WF38800850
     1RE DETECTED IN SURFACE *2A6,   14H* AS SEEN FROM/33H THE REFERENCE38800860
     2 PLANE OF SURFACE *2A6,55H*. A VALUE OF 0.05 WAS USED TO ALLOW THE38800870
     3 SILHOUETTE TO /89H BE DEVELOPED. THE RESULTING SILHOUETTE MAY NOT38800880
     4 BE VALID AND THE FACTOR MAY BE INCORRECT.)                       38800890
      GO TO 7000                                                        38800900
6950  DZ=P(3,J,IN)                                                      38800910
7000  X(J)=(P(1,J,IN)-X1(NV,1))/DZ                                      38800920
      IF(DABS(X(J)).LE.1.D-7)X(J)=0.0                                   38800930
C COMPUTE HORIZONTAL INCREMENT IN Z=1 PLANE                             38800940
      DXI(J)=DX(NV)/DZ                                                  38800950
C TRANSFORM Y-COORDINATE TO Z=1 PLANE                                   38800960
      Y(J)=(P(2,J,IN)-Y1(NV))/DZ                                        38800970
      IF(DABS(Y(J)).LE.1.D-7)Y(J)=0.0                                   38800980
      YDI=Y(J)-YMIN                                                     38800990
      IF(1.E-6-ABS(YDI))8000,10100,10100                                38801000
8000  IF(YDI)10000,10100,12000                                          38801010
C SELECT ALL YMIN                                                       38801020
10000 JM=1                                                              38801030
      YMIN=Y(J)                                                         38801040
      GO TO 10200                                                       38801050
10100 JM=JM+1                                                           38801060
10200 NJM(JM)=J                                                         38801070
12000 CONTINUE                                                          38801080
C START LOOP TO DETERMINE SILHOUETTE FROM LINE SEGMENTS PROJECTED ON Z=138801090
C PLANE AND COMPUTE PLANE POINT FACTOR FROM THIS SILHOUETTE.            38801100
12100 DO 987  NH=1,NHL                                                  38801110
```

Figure 53. Subroutine SILFAC Listing (Sheet 3 of 15)

```
      CFACII                                                          09/30/85                PAGE  59
          38807J     -  FFN   SOURCE STATEMENT  -  IFN(S)  -

12150 IF(NX)12200,12800,12800                                          38801120
12200 DSQ=X**2+YSPZS                                                   38801130
      D=SQRT (DSQ)                                                     38801140    102
      F1=RSQZ/(DSQ*D)                                                  38801150
      FH(NH)=F1                                                        38801160
      IF(NX+1)12300,986,12300                                          38801170
12300 ALPHA =DSQ-RSQ                                                   38801180
      IF(ALPHA)903,903,12350                                           38801190
12350 BETA=SQRT (RSMZS/ALPHA)                                          38801200    108
      FH(NH)=A  TAN (BETA)-F1*A  TAN (BETA*D/P(3,1,IN))-ALPHA*BETA/DSQ 38801210    109   111
      IF(NX.EQ.-2)FH(NH)=FH(NH)+F1*3.1459265                           38801220
      GO TO 986                                                        38801230
C COMPUTE VECTOR SLOPES,ANGLES AND Y-INTERCEPTS                        38801240
12800 NLS=NP-1                                                         38801250
      NOP=4                                                            38801260
      DO 400 I=1,NLS                                                   38801270
C PICKUP COMPUTED NOP FOR CLASS 8 SURFACES(COMPLEX MODE)               38801280
      IF(NX.NE.0)NOP=MN(I)                                             38801290
      DO 400 J=1,NOP                                                   38801300
C PICKUP JTH POINT CONNECTING TO I.                                    38801310
      NPP=MP(J,I,ID)                                                   38801320
C THE SLOPE OF LINE SEGMENT FROM I TO J IS THE SAME AS J TO I. IF THE  38801330
C CONNECTING POINT IS NUMERICALLY LESS THAN POINT, THE SLOPE AND       38801340
C Y-INTERCEPT HAVE ALREADY BEEN COMPUTED.                              38801350
C IF NPP IS GREATER THAN I, GO TO COMPUTE LINE SEGMENT PARAMETERS.     38801360
      IF(I-NPP)225,400,400                                             38801370
C SEARCH FOR POINT I FROM CONNECTIONS TO NPP.                          38801380
225   DO 240 K=1,4                                                     38801390
 227  IF(MP(K,NPP,ID)-I)240,260,240                                    38801400
 240  CONTINUE                                                         38801410
C COMPUTE SLOPES,Y-INTERCEPTS AND VECTOR QUASI ANGLES                  38801420
 260  DYY=Y(NPP)-Y(I)                                                  38801430
      DXX=X(NPP)-X(I)                                                  38801440
      IF(DXX)265,295,265                                               38801450
265   SL(J,I)=DYY/DXX                                                  38801460
C IF NOT CLASS 8, THE Y-INTERCEPT COMPUTATION IS NOT REQD              38801470
      IF(NX.NE.0)YI(J,I)=(Y(I)*X(NPP)-X(I)*Y(NPP))/DXX                 38801480
```

Figure 53. Subroutine SILFAC Listing (Sheet 4 of 15)

```
269    IF(DABS(SL(J,I))-1.D0)270,300,300                                38801490
270    IF(DXX)280,280,290                                               38801500
280    VA(J,I)=SL(J,I)+4.D0                                             38801510
       GO TO 325                                                        38801520
290    VA(J,I)=SL(J,I) + 8.D0                                           38801530
       GO TO 315                                                        38801540
295    YI(J,I)=-X(I)*1.D+30                                             38801550
       SL(J,I)=1.D+30                                                   38801560
300    IF(DYY)310,305,320                                               38801570
305    SL(J,I)=0.0                                                      38801580
       YI(J,I)=1.D+30                                                   38801590
306    VA(J,I)=-1.D0                                                    38801600
       VA(K,NPP)=-1.D0                                                  38801610
       GO TO 370                                                        38801620
310    VA(J,I)=6.D0-1.D0/SL(J,I)                                        38801630
315    VA(K,NPP)=VA(J,I)-4.D0                                           38801640
       GO TO 370                                                        38801650
320    VA(J,I)=2.D0-1.D0/SL(J,I)                                        38801660
325    VA(K,NPP)=VA(J,I)+4.D0                                           38801670
370    YI(K,NPP)=YI(J,I)                                                38801680
       SL(K,NPP)=SL(J,I)                                                38801690
 400   CONTINUE                                                         38801700
C SELECT YMIN HAVING XMIN AS FIRST POINT ON SILHOUETTE                  38801710
       DO 11400 J=1,JM                                                  38801720
       I=NJM(J)                                                         38801730
       IF(X(I)-XYMIN)11300,11400,11400                                  38801740
11300  NS(1)=I                                                          38801750
       XYMIN=X(I)                                                       38801760
11400  CONTINUE                                                         38801770
C NL=SUBSCRIPT OF POSITION OF COMPUTED X,Y OF POINT ON SILHOUETTE       38801780
C OBTAINED BY INTERSECTION OF LINE ELEMENTS                             38801790
       NL=NP                                                            38801800
C NS(1) IS THE FIRST POINT OF SILHOUETTE                                38801810
       L=NS(1)                                                          38801820
C NPP IS BASE POINT OF VECTOR FORMING  SILHOUETTE.                      38801830
       NPP=NP+1                                                         38801840
C JR IS SUBSCRIPT OF CONNECTING POINT  FORMING SIL VECTOR,AS (JR,NPP)   38801850
```

Figure 53. Subroutine SILFAC Listing (Sheet 5 of 15)

```
      JR=1                                                              38801860
      VA(JR,NPP)=5.                                                     38801870
      NERR=0                                                            38801880
      IF(NX)649,105,649                                                 38801890
105   LX=L                                                              38801900
      M=1                                                               38801910
      NLP=L                                                             38801920
      GO TO 115                                                         38801930
100   M=M+1                                                             38801940
      IF(119-M)2600,2700,2700                                           38801950
2600  WRITE(6,2620)                                                     38801960   225
2620  FORMAT(87HOTHIS SILHOUETTE DOES NOT CONVERGE. A CONFIGURATION FACT38801970
     1OR OF C IS ASSIGNED THIS POINT. //)                               38801980
2610  WRITE( 6,2621)      NV,NH                                         38801990   226
2621  FORMAT(1H I3,I4)                                                  38802000
      GO TO 903                                                         38802010
2700  NS(M)=NPP                                                         38802020
C TEST FOR CONVERGENCE                                                  38802030
      IF(NPP-L)104,995,104                                              38802040
C IF NONCONVERGENT ON L, TEST FOR COINCIDENT POINTS                     38802050
104   IF(NZ)107,110,107                                                 38802060
107   DO 108 J=1,NZ                                                     38802070
      IF(NCP(J)-NPP)108,995,108                                         38802080
108   CONTINUE                                                          38802090
110   NLP=NPP                                                           38802100
C SIMPLE MODE VECTOR ANALYSIS-ASSEMBLY OF POSSIBLE PATHS FROM POINT NPP 38802110
C ASSEMBLE INTO ARRAYS NI AND NJ ALL VECTORS EMANATING FROM POINT NPP   38802120
C REJECT ALL POINT VECTORS.  ASSUME OTHER POINTS MAY COINCIDE WITH NPP  38802130
C                                                                       38802140
C INITIALIZE ANALYSIS VARIABLES                                         38802150
C NZ IS TALLY OF POINTS COINCIDENT WITH FIRST POINT NS(1) ON SILHOUETTE 38802160
115   NZ=0                                                              38802170
C MX IS TALLY OF VECTORS EMERGING FROM THIS POINT NPP AND COINCIDENT    38802180
C  POINTS,IF ANY                                                        38802190
      MX=0                                                              38802200
C NLR IS THE PRIOR POINT ALONG A CHAIN OF COINCIDENT POINTS             38802210
      NLR=0                                                             38802220
```

Figure 53. Subroutine SILFAC Listing (Sheet 6 of 15)

```
C NJX IS THE 3RD SUBSCRIPT OF 2ND POINT VECTOR,IF ANY,EMANATING FROM NPP38802230
120   NJX=0                                                            38802240
C JX IS 3RD SUBSCRIPT OF 1ST POINT VECTOR,IF ANY,EMANATING FROM NPP AND 38802250
C COINCIDENT POINTS,IF ANY                                             38802260
125   JX=0                                                             38802270
C LOOP TO SELECT VECTORS                                               38802280
      DO 165 J=1,4                                                     38802290
C IF NO CONNECTIONS ARE STORED IN THIS SPOT,CONTINUE                   38802300
      IF(MP(J,NLP,ID))126,165,126                                      38802310
C A NEG VALUE FOR VA IS A  FLAG FOR A POINT VECTOR                     38802320
C IF A POINT VECTOR, GO TO 130                                         38802330
C IF NOT A POINT VECTOR,GO TO 160 TO STORE                             38802340
126   IF(VA(J,NLP))130,160,160                                         38802350
C IF THE LAST POINT FORMS A POINT VECTOR WITH THIS POINT NLP,IGNORE    38802360
130   IF(NLR-MP(J,NLP,ID))135,165,135                                  38802370
C IF THIS IS THE FIRST POINT ON THE SILHOUETTE,GO TO 145 TO TALLY ALL  38802380
C POINTS COINCIDENT WITH THIS POINT(ALL POINTS FORMING A CHAIN OF POINT 38802390
C VECTORS)                                                             38802400
135   IF(M-1)145,140,145                                               38802410
C STORE ALL COINCIDENTS                                                38802420
140   NZ=NZ+1                                                          38802430
      NCP(NZ)=MP(J,NLP,ID)                                             38802440
C JX=0 FOR FIRST COINCIDENT POINT WITH NPP,AND SUBSEQUENT NLP-GO TO 155 38802450
145   IF(JX)150,155,150                                                38802460
C JX IS NONZERO IF A SECOND COINCIDENT POINT  OCCURS WITH NPP, THE FIRST38802470
C POINT ANALYZED. STORE TO RESTART ANALYSIS OF SECOND COINCIDENT STRING 38802480
150   NJX=J                                                            38802490
      NLT=NLP                                                          38802500
      GO TO 165                                                        38802510
C STORE J                                                              38802520
155   JX=J                                                             38802530
      GO TO 165                                                        38802540
C STORE ALL VECTORS EMANATING FROM NLP-                                38802550
160   MX=MX+1                                                          38802560
      NI(MX)=NLP                                                       38802570
      NJ(MX)=J                                                         38802580
165   CONTINUE                                                         38802590
```

Figure 53. Subroutine SILFAC Listing (Sheet 7 of 15)

```
C IF JX IS 0, THIS CHAIN IS TERMINATED-IF NONZERO,CONTINUE ALONG CHAIN  38802600
      IF(JX)170,175,170                                                 38802610
C STORE PRESENT POINT AND MOVE TO NEXT POINT ON CHAIN                   38802620
170   NLR=NLP                                                           38802630
      NLP=MP(JX,NLP ,ID)                                                38802640
      GO TO 125                                                         38802650
C IF NJX IS NONZERO,GO TO ANALYZE SECOND CHAIN,OTHERWISE GO TO SELECT   38802660
C NEXT POINT ON SILHOUETTE                                              38802670
175   IF(NJX)835,835,180                                                38802680
C RESTORE ORIGINAL ENTRY POINT AND MOVE TO NEXT POINT ON CHAIN          38802690
180   NLR=NLT                                                           38802700
      NLP=MP(NJX,NLR,ID)                                                38802710
      GO TO 120                                                         38802720
649   SL(JR,NPP)=1.                                                     38802730
      YI(JR,NPP)=Y(L)-X(L)                                              38802740
      X(NPP)=X(L)                                                       38802750
      Y(NPP)=Y(L)                                                       38802760
      NLP=NPP                                                           38802770
C M=NO. OF POINTS DEFINING SILHOUETTE                                   38802780
      M=0                                                               38802790
C X1= X-VALUE OF HEAD OF DEPARTURE VECTOR                               38802800
      XO=X(L)-1.                                                        38802810
C X2= X-VALUE OF BASE OF DEPARTURE VECTOR                               38802820
      X2=X(L)                                                           38802830
 660  XMIN=1.E+30                                                       38802840
      TOLNPP=TOLA*DABS(Y(NPP))                                          38802850
      IF(TOLNPP.LT.TOLA)TOLNPP=TOLA                                     38802860
      TOLNLP=TOLA*DABS(Y(NLP))                                          38802870
      IF(TOLNLP.LT.TOLA)TOLNLP=TOLA                                     38802880
      SLR=0.                                                            38802890
      IF( ABS(SNGL(SL(JR,NPP))).GT.1.)SLR=1.                            38802900
C INITIALIZE COUNT OF VECTORS TO BE CONSIDERED IN FINAL SELECTION OF    38802910
C SILHOUETTE PATH.                                                      38802920
403   MX=0                                                              38802930
C ENTER LOOP TO DETERMINE WHICH VECTORSTOUCH THE REFERENCE OR DEPARTURE 38802940
C VECTOR (JR,NPP)                                                       38802950
662   IF(Y(NLP)-Y(NPP))3000,3000,3100                                   38802960
```

Figure 53. Subroutine SILFAC Listing (Sheet 8 of 15)

```
3000  YU=Y(NPP)+TØLNPP                                                38802970
      YL=Y(NLP)-TØLNLP                                                38802980
      GØ TØ 3200                                                      38802990
3100  YU=Y(NLP)+TØLNLP                                                38803000
      YL=Y(NPP)-TØLNPP                                                38803010
3200  DØ 2222 I=1,NP                                                  38803020
      SL6=0                                                           38803030
      IF(I.EQ.NLP.AND.M.NE.0)GØ TØ 2222                               38803040
      IF(I.EQ.NPP.AND.M.NE.0)SL6=1                                    38803050
      NCP=MN(I)                                                       38803060
C SELECT VECTØR (J,I)-                                                38803070
 663  DØ 800 J=1,NCP                                                  38803080
C DETERMINE IF THE TEST VECTØR CAN PØSSIBLY INTERCEPT THE REF VECTØR  38803090
 1111 NPC=MP(J,I,ID)                                                  38803100
      IF(SL6.NE.0)IF(J-JR)674,800,674                                 38803110
      IF(NPC.EQ.NPP.ØR.NPC.EQ.NLP)GØ TØ 800                           38803120
      IF(Y(NPC).GT.YU.AND.Y(I).GT.YU.ØR.Y(NPC).LT.YL.AND.Y(I).LT.YL) GØ 38803130
     1 TØ 800                                                         38803140
3600  SL2=0                                                           38803150
C CØMPUTE CØEFFICIENT DETERMINANT WITH REF VECTØR                     38803160
664   CD=SL(JR,NPP)-SL(J,I)                                           38803170
C IF CD=0,ØR NEAR ZERØ, TEST VECTØR(J,I) AND REFERENCE VECTØR(JR,NPP) 38803180
C ØF ALL VECTØRS PARALLEL TØ REF VECTØR, SELECT ØNLY THØSE TØUCHING AND 38803190
C EXTENDING BEYØND THE REF VECTØR IN THE ØPPØSITE  DIRECTIØN.         38803200
 665  IF(DABS(CD)-TØLA )667,667,670                                   38803210
667   IF(TØLA-DABS(VA(JR,NPP)-VA(J,I)))668,800,800                    38803220
C EXCLUDE ALL VECTØRS HAVING SAME DIRECTIØN AS REF VECTØR             38803230
C EXCLUDE ALL NØT IN SAME LINE(NØNCØNCURRENT)                         38803240
668   TØL=TØLA*DABS(YI(JR,NPP))                                       38803250
      IF(TØL.LT.TØLA)TØL=TØLA                                         38803260
672   IF(DABS(YI(JR,NPP)-YI(J,I))-TØL)673,673,800                     38803270
C QUASI-ANGLES ØF 9 UNITS ARE THE SAME AS 1 UNIT(1ST QUAD,45DEG VECTØR) 38803280
673   IF(DABS(VA(JR,NPP)-VA(J,I))-7.9999)674,800,800                  38803290
 674  XA=X(NPP)                                                       38803300
      YA=Y(NPP)                                                       38803310
      GØ TØ 679                                                       38803320
670   XA=(YI(J,I)-YI(JR,NPP))/CD                                      38803330
```

Figure 53. Subroutine SILFAC Listing (Sheet 9 of 15)

```
      YA=(YI(J,I)*SL(JR,NPP)-YI(JR,NPP)*SL(J,I))/CD                    38803340
 679  TØLX=TØLA                                                        38803350
      IF(ABS(SNGL(XA)).GT.1.)TØLX=ABS(XA)*TØLA                         38803360
      TØLY=TØLA                                                        38803370
      IF(ABS(SNGL(YA)).GT.1.)TØLY=ABS(YA)*TØLA                         38803380
4500  IF(SLR)410,420,410                                               38803390
410   XB=YA-Y(LT)                                                      38803400
      TØL1=TØLY                                                        38803410
      GØ TØ 430                                                        38803420
420   XB=XA-X0                                                         38803430
      TØL1=TØLX                                                        38803440
430   XC=DABS(XB)                                                      38803450
      IF(TØL1-XC)435,800,800                                           38803460
435   IF(SLR)440,450,440                                               38803470
440   XD=YA-Y(NPP)                                                     38803480
      GØ TØ 460                                                        38803490
450   XD=XA-X2                                                         38803500
460   IF(TØL1-DABS(XD))675,695,695                                     38803510
675   IF(XB.LT.0..AND.XD.LT.0..ØR.XB.GT.0..AND.XD.GT.0.)GØ TØ 800      38803520
695   IF(1.-DABS(SL(J,I)))696,696,697                                  38803530
696   SL2=1                                                            38803540
      XF=YA-Y(NPC)                                                     38803550
      TØL2=TØLY                                                        38803560
      GØ TØ 700                                                        38803570
697   XF=XA-X(NPC)                                                     38803580
      TØL2=TØLX                                                        38803590
700   IF(TØL2-DABS(XF))704,800,800                                     38803600
704   IF(SL2)705,706,705                                               38803610
705   XE=YA-Y(I)                                                       38803620
      GØ TØ 708                                                        38803630
706   XE=XA-X(I)                                                       38803640
708   IF(TØL2-DABS(XE))710,735,735                                     38803650
710   IF(XE.LT.0..AND.XF.LT.0..ØR.XE.GT.0..AND.XF.GT.0.)GØ TØ 800      38803660
 735  XG=XC-XMIN                                                       38803670
      IF(TØL1-DABS(XG))745,760,760                                     38803680
745   IF(XG)755,755,800                                                38803690
 755  XM=XA                                                            38803700
```

Figure 53. Subroutine SILFAC Listing (Sheet 10 of 15)

```
      YM=YA                                                    38803710
      TØL3=TØLX                                                38803720
      TØL4=TØLY                                                38803730
      XMIN=XC                                                  38803740
      MX=1                                                     38803750
      GØ TØ 770                                                38803760
 760  MX=MX+1                                                  38803770
 770  NI(MX)=I                                                 38803780
      NJ(MX)=J                                                 38803790
 800  CØNTINUE                                                 38803800
 2222 CØNTINUE                                                 38803810
802   IF(M)805,803,805                                         38803820
803   M=1                                                      38803830
      GØ TØ 835                                                38803840
 805  M=M+1                                                    38803850
      IF(MX)4560,4550,4560                                     38803860
4550  XM=X(NPP)                                                38803870
      YM=Y(NPP)                                                38803880
4560  IF(M-119)810,810,2600                                    38803890
810   IF(DABS(XM-X(NPP))-TØL3 )540,540,830                     38803900
 540  IF(DABS(YM-Y(NPP))-TØL4 )820,820,830                     38803910
 820  IF(DABS(XM-X(L))-TØL3 )821,821,823                       38803920
 821  IF(DABS(YM-Y(L))-TØL4 )822,822,823                       38803930
 822  NS(M)=L                                                  38803940
      GØ TØ 995                                                38803950
 830  MX=MX+1                                                  38803960
      NI(MX)=NLP                                               38803970
      NJ(MX)=NJX                                               38803980
 834  NL=NL+1                                                  38803990
2800  IF(NL-119)824,824,2600                                   38804000
824   X(NL)=XM                                                 38804010
      Y(NL)=YM                                                 38804020
      NS(M)=NL                                                 38804030
      NERR=NERR+1                                              38804040
      IF(NERR-6) 835,2600,2600                                 38804050
 823  NS(M)=NPP                                                38804060
      IF(MX)4580,4570,4580                                     38804070
```

Figure 53. Subroutine SILFAC Listing (Sheet 11 of 15)

```
4570  NLP=NPP                                                          38804080
      NJX=JR                                                           38804090
      GO TO 4590                                                       38804100
4580  NERR=0                                                           38804110
 835  VAMIN=10.                                                        38804120
      SL1=1                                                            38804130
840   DO  940 K=1,MX                                                   38804140
      I=NI(K)                                                          38804150
      J=NJ(K)                                                          38804160
      VECD=VA(JR,NPP)-VA(J,I)                                          38804170
      IF(NX)3333,3330,3333                                             38804180
 3330 IF(MX-2)920,3333,3331                                            38804190
 3331 IF(1.E-6-ABS(VECD))3332,940,940                                  38804200
 3332 IF(ABS(VECD)-7.999999)3333,940,940                               38804210
 3333 IF(VECD)850,940,870                                              38804220
C IF SL1 IS ON, TURN OFF AND REINITIALIZE MIN SEARCH-IF OFF,CONTINUE   38804230
850   IF(SL1)860,890,860                                               38804240
860   SL1=0                                                            38804250
      VAMIN=10.0                                                       38804260
      GO TO 890                                                        38804270
C IF SL1 IS ON, CONTINUE TO SEEK THE MIN-IF OFF, GO TO NEXT VECTOR     38804280
870   IF(SL1)890,940,890                                               38804290
C IF THE TEST VECTOR IS EQUAL IN ANGULAR VALUE TO THE MIN, SELECT THE  38804300
C LONGEST VECTOR.                                                      38804310
890   IF(VA(J,I)-VAMIN)910,905,940                                     38804320
C XM AND YM ARE NOT COMPUTED FOR SIMPLE MODE-SET EQUAL TO PRESENT POINT 38804330
905   IF(NX)908,907,908                                                38804340
907   XM=X(NLP)                                                        38804350
      YM=Y(NLP)                                                        38804360
C PICKUP MIN VECTOR                                                    38804370
908   NLT=NI(NK)                                                       38804380
      NJX=NJ(NK)                                                       38804390
      NJX=MP(NJX,NLT,ID)                                               38804400
C PICKUP HEAD END OF TEST VECTOR                                       38804410
      NPC=MP(J,I,ID)                                                   38804420
C COMPUTE LENGTHS FROM INTERSECTION WITH REF VECTOR AND SELECT LONGEST 38804430
C IF UNEQUAL                                                           38804440
```

Figure 53. Subroutine SILFAC Listing (Sheet 12 of 15)

```
      CFACII                                                          09/30/85                PAGE  68
          38807J      -  EFN   SOURCE STATEMENT  -  IFN(S)  -

      IF(SQRT((SNGL(X(NPC)-XM))**2+(SNGL(Y(NPC)-YM))**2)-SQRT((SNGL(X(NJ38804450
     1X)-XM))**2+(SNGL(Y(NJX)-YM))**2))940,940,920                    38804460    540   543
 910  VAMIN=VA(J,I)                                                    38804470
 920  NK=K                                                             38804480
940   CONTINUE                                                         38804490
945   NLP=NI(NK)                                                       38804500
      NJX=NJ(NK)                                                       38804510
4590  NPP=MP(NJX,NLP,ID)                                               38804520
610   DO 650 JR=1,4                                                    38804530
615   IF(MP(JR,NPP,ID)-NLP)650,656,650                                 38804540
 650  CONTINUE                                                         38804550
656   IF(NX)657,100,657                                                38804560
 657  LT=NS(M)                                                         38804570
      X0=X(LT)                                                         38804580
      X2=X(NPP)                                                        38804590
      GO TO 660                                                        38804600
995   IF(NDO)996,998,996                                               38804610
996   WRITE( 6,951)NV,NH,(NS(I),I=1,M)                                 38804620    574
951   FORMAT(1H I3,I4,3X,24I4/(11X,24I4))                              38804630
C INITIALIZE FACTOR FUNCTION FH.                                       38804640
998   FH(NH)=0.                                                        38804650
      NPS=M-1                                                          38804660
      DO 980 I=1,NPS                                                   38804670
      J=NS(I)                                                          38804680
      K=NS(I+1)                                                        38804690
      ANG=0.                                                           38804700
      FS2=XP(1,J)*YP(1,K)-XP(1,K)*YP(1,J)                              38804710
C IF THE PROJECTED AREA IS NOT ZERO, PROCEED TO COMPUTE THE PROJECTED  38804720
C AREA FUNCTION OF THE CIRCULAR SECTOR FORMED BY THE TRIANGLE AND UNIT 38804730
C SPHERE                                                               38804740
      IF(FS2)950,980,950                                               38804750
C COMPUTE THE CROSS PRODUCT OF VECTORS TO POINTS DEFINING LINE SEGMENT 38804760
950   FS3=SQRT((YP(1,J)-YP(1,K))**2+(XP(1,J)-XP(1,K))**2+FS2**2)       38804770
C COMPUTE THE COSINE OF ANGLE BETWEEN THE CIRCULAR SECTOR AND X-Y PLANE 38804780
C (K-COMPONENT OF X-PRODUCT )                                          38804790    598
 952  CSG=FS2/FS3                                                      38804800
C COMPUTE THE DOT PRODUCT SAME VECTORS                                 38804810
```

Figure 53. Subroutine SILFAC Listing (Sheet 13 of 15)

```
 953  FCS=XP(1,J)*XP(1,K)+YP(1,J)*YP(1,K)+1.                          38804820
C COMPUTE THE ANGLE BETWEEN VECTOR IN RADIANS                          38804830
      IF(FCS)960,965,970                                               38804840
 960  ANG=3.1415927                                                    38804850
      GO TO 970                                                        38804860
965   FH(NH)=FH(NH)+1.5707963*CSG                                      38804870
      GO TO 980                                                        38804880
970   FH(NH)=FH(NH)+(A  TAN (FS3/FCS)+ANG)*CSG                         38804890    613
  980 CONTINUE                                                         38804900
C IF THE PROJECTED AREA IS VERY SMALL, SET TO 0 (FH IS DOUBLE THIS AREA)38804910
      IF(FH(NH)-1.E-6)903,903,986                                      38804920
903   FH(NH)=0.                                                        38804930
C IF A DETAILED PRINTOUT WAS REQUESTED, COMPUTE THE POINT FACTOR       38804940
 986  IF(NDO)971,984,971                                               38804950
971   IF(NH-25)500,500,984                                             38804960
500   IF(NV-25)520,520,984                                             38804970
520   FHP(NH,NV)=FH(NH)/FD                                             38804980
984   IF(NH-NHI)972,972,988                                            38804990
C MOVE THE ORIGIN(THE POSITION OF THE POINT RELATIVE TO SURFACE 2) TO   38805000
C THE RIGHT AN INCREMENT AND CONTINUE                                  38805010
972   DO 976 J=1,NP                                                    38805020
975   X(J)=X(J)-DXI(J)                                                 38805030
      IF(DABS(X(J)).LE.1.E-7)X(J)=0.0                                  38805040
976   CONTINUE                                                         38805050
 987  CONTINUE                                                         38805060
C INTEGRATE THE FUNCTION FH ALONG THE HORIZONTAL GRID                  38805070
 988  DO 990 I=2,NHI                                                   38805080
990   FV(NV)=FV(NV)+FH(I)                                              38805090
      FV(NV)=(FV(NV)+(FH(1)+FH(NVL))/2.)*DX(NV)                        38805100
 1000 CONTINUE                                                         38805110
C INTEGRATE THE FUNCTION FV ALONG THE VERTICAL. DIVIDE BY 2 TO CONVERT 38805120
C FH TO AREA, BY PI TO CONVERT THIS TO A CONFIGURATION FACTOR, AND BY  38805130
C THE MAPPING AREA TO YIELD THE FORM FACTOR.                           38805140
      DO 1050 K=2,NVI                                                  38805150
 1050 F=F+FV(K)                                                        38805160
      F=ABS (F+(FV(1)+FV(NVL))/2.)*DY/ AMAP   /FD                      38805170
C IF A PART OF SURFACE 1 IS SHADOWED, THE FACTOR MUST BE REDUCED TO    38805180
```

Figure 53. Subroutine SILFAC Listing (Sheet 14 of 15)

```
      CFACII                                                          09/30/85          PAGE  70
          38807J      -  EFN   SOURCE STATEMENT  -  IFN(S)  -

C REFLECT THIS.                                                       38805190
      IF(LI(1).LT.0)F=F*AREAX(1)/AREA(J1)                             38805200
C COMPUTE THE FACTOR X AREA PRODUCT                                   38805210
1500  FAP=F*AREA(J1 )                                                 38805220
2300  RETURN                                                          38805230
      END                                                             38805240
```

Figure 53. Subroutine SILFAC Listing (Sheet 15 of 15)

CFACII 09/30/85 PAGE 90
38807J

STORAGE MAP

SUBROUTINE SILFAC

COMMON VARIABLES

COMMON BLOCK // ORIGIN 00001 LENGTH 35144

SYMBOL	LOCATION	TYPE	SYMBOL	LOCATION	TYPE	SYMBOL	LOCATION	TYPE
X	00000	D	Y	00360	D	SL	00740	D
VA	02400	D	KC	04040	I	AREA	04125	R
NSN	04212	I	NSC	04277	I	NDL	04364	I
RX	04451	R	RY	04464	R	ZS	04477	R
MP	04512	I	PAF	15322	R	CL	15335	R
DK	15350	R	PT	15420	R	RA	15610	R
SP	15622	R	NMS	15660	I	MSNOS	16100	I
X1	16114	R	Y1	16306	R	DX	16403	R
FH	16500	R	FV	16575	R	PP	16672	R
BUF	33324	R	NOP	33327	I	NTITLE	33414	I
NCIM	33444	I	AREAX	33462	R	NDA	33464	I
LD	33472	I	LP	33500	I	LI	33502	I
SL1	33504	I	SL2	33505	I	SL3	33506	I
SL4	33507	I	NC	33510	I	S7	33511	I
V	33512	R	NDM	33515	I	ND	33602	I
KX	33603	I	KP	33604	I	NP	33605	I
FAP	33606	R	NHI	33607	I	NHL	33610	I
NVI	33611	I	NVL	33612	I	F	33613	R
DY	33614	R	AMAP	33615	R	NDO	33616	I
FHP	33617	R	MN	35000	I	P	16675	R
KD	15350	I	NNN	00740	I	XP	00000	R
YP	00360	R						

DIMENSIONED PROGRAM VARIABLES

SYMBOL	LOCATION	TYPE	SYMBOL	LOCATION	TYPE	SYMBOL	LOCATION	TYPE
NCP	35145	I	NS	35157	I	NJM	35347	I
YI	35373	D	NI	37033	I	NJ	37177	I

Figure 54. Subroutine SILFAC Core Storage Map (Sheet 1 of 5)

CFACII 09/30/85 PAGE 91
38807J

STORAGE MAP

XV	37343	R	YV	37345	R	DXI	37347	D
NA	37657	I						

UNDIMENSIONED PROGRAM VARIABLES

SYMBOL	LOCATION	TYPE	SYMBOL	LOCATION	TYPE	SYMBOL	LOCATION	TYPE
SL5	37660	I	SL6	37661	I	DYY	37663	D
DXX	37665	D	YMIN	37667	D	XYMIN	37671	D
XO	37673	D	X2	37675	D	CD	37677	D
XM	37701	D	YM	37703	D	XA	37705	D
YA	37707	D	XB	37711	D	XC	37713	D
XD	37715	D	XE	37717	D	XF	37721	D
XG	37723	D	XMIN	37725	D	YU	37727	D
YL	37731	D	TOLA	37733	D	TOLX	37735	D
TOLY	37737	D	TOL1	37741	D	TOL2	37743	D
TOL3	37745	D	TOL4	37747	D	TOLNPP	37751	D
TOLNLP	37753	D	NCAM	37755	I	J1	37756	I
N2	37757	I	IN	37760	I	ID	37761	I
NX	37762	I	N	37763	I	FD	37764	R
ZSQ	37765	R	RSQ	37766	R	RSQZ	37767	R
RSMZS	37770	R	NV	37771	I	YSPZS	37772	R
J	37773	I	DZ	37774	R	YDI	37775	R
JM	37776	I	NH	37777	I	DSQ	40000	R
D	40001	R	F1	40002	R	ALPHA	40003	R
BETA	40004	R	NLS	40005	I	NOP	40006	I
I	40007	I	NPP	40010	I	K	40011	I
NL	40012	I	L	40013	I	JR	40014	I
NERR	40015	I	LX	40016	I	M	40017	I
NLP	40020	I	NZ	40021	I	MX	40022	I
NLR	40023	I	NJX	40024	I	JX	40025	I
NLT	40026	I	SLR	40027	R	NPC	40030	I
TOL	40031	R	LT	40032	I	VAMIN	40033	R
VECD	40034	R	NK	40035	I	NPS	40036	I
ANG	40037	R	FS2	40040	R	FS3	40041	R
CSG	40042	R	FCS	40043	R			

Figure 54. Subroutine SILFAC Core Storage Map (Sheet 2 of 5)

CFACII 09/30/85 PAGE 92
38807J

STØRAGE MAP

ENTRY PØINTS

SILFAC SECTIØN 4

SUBRØUTINES CALLED

.FWRD.	SECTIØN	5	SQRT	SECTIØN	6	ATAN	SECTIØN	7
.UNØ6.	SECTIØN	8	.FFIL.	SECTIØN	9	.FCNV.	SECTIØN	10
SYSLØC	SECTIØN	11						

EFN IFN CØRRESPØNDENCE

EFN	IFN	LØCATIØN	EFN	IFN	LØCATIØN	EFN	IFN	LØCATIØN
29700	37A	40375	29000	15A	40313	29800	38A	40377
29050	23A	40334	29200	30A	40351	29100	26A	40342
29150	28A	40345	29160	29A	40347	31000	39A	40401
1000	660A	44213	31500	43A	40451	31550	45A	40452
29250	47A	40455	29900	54A	40473	12100	96A	40653
12000	94A	40647	6900	59A	40520	6950	64A	40544
6960	61A	40524	7000	66A	40546	6970	FØRMAT	40145
8000	85A	40627	10100	91A	40637	10000	87A	40632
10200	92A	40642	987	646A	44167	12150	99A	40666
12200	101A	40671	12800	118A	40775	12300	105A	40717
986	622A	44121	903	620A	44120	12350	107A	40725
400	198A	41353	225	131A	41112	240	137A	41131
227	134A	41126	260	139A	41133	265	145A	41153
295	167A	41225	269	154A	41201	270	157A	41212
300	171A	41234	280	159A	41215	290	163A	41221
325	190A	41317	315	183A	41274	310	180A	41266
305	173A	41240	320	187A	41311	306	176A	41244
370	193A	41333	11400	209A	41405	11300	207A	41374
649	287A	41675	105	218A	41436	115	241A	41524
100	222A	41445	2600	225A	41454	2700	228A	41475
2620	FØRMAT	40230	2610	226A	41462	2621	FØRMAT	40250
104	231A	41505	995	572A	43662	107	233A	41507

Figure 54. Subroutine SILFAC Core Storage Map (Sheet 3 of 5)

CFACII 09/30/85 PAGE 93
38807J STORAGE MAP

110	240A	41522	108	238A	41520	120	244A	41527
125	245A	41530	165	274A	41627	126	251A	41557
130	254A	41562	160	270A	41612	135	257A	41565
145	263A	41600	140	259A	41570	150	265A	41602
155	268A	41607	170	277A	41634	175	281A	41653
835	495A	43247	180	283A	41656	660	300A	41756
403	310A	42053	662	311A	42054	3000	315A	42072
3100	319A	42113	3200	322A	42133	2222	446A	43017
663	332A	42222	800	444A	43014	1111	335A	42274
674	374A	42437	3600	352A	42343	664	353A	42344
665	356A	42347	667	358A	42356	670	378A	42444
668	362A	42372	672	366A	42411	673	370A	42425
679	385A	42460	4500	390A	42514	410	392A	42516
420	395A	42524	430	396A	42531	435	398A	42542
440	400A	42544	450	403A	42550	460	404A	42553
675	406A	42564	695	410A	42615	696	413A	42630
697	417A	42645	700	419A	42657	704	421A	42670
705	423A	42672	706	426A	42676	708	428A	42701
710	430A	42712	735	434A	42743	745	436A	42757
760	440A	42777	755	438A	42762	770	441A	43002
802	448A	43021	805	452A	43026	803	450A	43023
4560	458A	43047	4550	455A	43033	810	460A	43053
540	463A	43072	830	475A	43155	820	466A	43111
821	469A	43130	823	488A	43232	822	472A	43147
834	479A	43172	2800	480A	43175	824	482A	43201
4580	494A	43246	4570	491A	43241	4590	554A	43577
840	496A	43253	940	548A	43563	3333	512A	43343
3330	506A	43324	920	547A	43561	3331	508A	43330
3332	510A	43336	850	514A	43346	870	519A	43354
860	516A	43350	890	521A	43356	910	545A	43546
905	524A	43376	908	529A	43404	907	526A	43400
945	550A	43565	610	556A	43613	650	562A	43632
615	559A	43627	656	564A	43634	657	566A	43636
996	574A	43664	998	579A	43706	951	FØRMAT	40252
980	616A	44112	950	593A	43762	952	599A	44030
953	600A	44033	960	606A	44066	965	608A	44071
970	612A	44076	971	624A	44123	984	631A	44136

Figure 54. Subroutine SILFAC Core Storage Map (Sheet 4 of 5)

```
CFACII                                                                  09/30/85                PAGE  94
    38807J                                          STØRAGE  MAP

500        626A       44127      520        628A       44133      972        633A       44142
988        648A       44171      976        644A       44164      975        636A       44144
990        651A       44176      1050       666A       44221      1500       674A       44256
2300       676A       44261
  DECK LENGTH IN ØCTAL IS     07147.
```

Figure 54. Subroutine SILFAC Core Storage Map (Sheet 5 of 5)

```
$DATA                                                                   38900000
(45HOTHE FOLLOWING ARE THE CARD IMAGES REQUESTED-//)  (14A6)(1H 14A6)   38900010
(  1H133X42HNAA SPACE AND INFORMATION SYSTEMS DIVISION/31X48HRADIANT-INT38900020
ERCHANGE CONFIGURATION FACTOR PROGRAM/1H045X16HC O N F A C  I I)        38900030
(   1HO18X12A6/19X12A6/1H045X18HI N P U T  D A T A)              (1H1) 38900040
( 13HODATA NAME- *1A6,1H*/ 78HONO CLASS NO.GIVEN IN COL.1 OF DATA NAME C38900050
ARD--YOUR JCB CANNOT BE CONTINUED.  )                                   38900060
(1HO/19HO***** DATA NAME- *2A6,1H*) (6F12.0)    (4F12.0,4I3,1F12.0)     38900070
(2F12.0,4I3,3F12.0/4I3,3F12.0,4I3,F12.0)                                38900080
(24HOSURFACE SPECIFICATIONS-/ 19HONO OF X-SECTIONS =I3,10X36HNO OF X-SEC38900090
TICN BOUNDARY DIVISIONS =I3/36HOLOCATION OF VERTICAL CENTERLINE, X=E14.738900100
,4H, Y=E14.7/14HOX-SECTION NO.5X13HX-AXIS RADIUS6X13HY-AXIS RADIUS6X24HE38900110
LEVATION ABOVE XY PLANE/(I7,6X3E19.7))                                  38900120
( 88HOTHE FOLLOWING INTERNALLY GENERATED SURFACE DATA RESULTED FROM THE 38900130
ABOVE SPECIFICATIONS-)                                                  38900140
(23HOSPHERE SPECIFICATIONS-/ 9HORADIUS =E14.7/30H COORDINATES OF CENTER-38900150
--- X =E14.7,5X3HY =E14.7,5X3HZ =E14.7)                                 38900160
(19HOMULTISURFACE DATA-/1HO12(1A6,1H,))          ENTRIE POINTXSECTN     38900170
(102HOYOU HAVE EXCEEDED THE MAX ALLOWABLE NO OF DATA  ENTRIES IN THE CLA38900180
SS IN WHICH THE ABOVE NAME APPEARS.)(21HOTRANSFORMATION DATA-)          38900190
(1HO2(5HPOINT7X1HX14X1HY14X1HZ11X)) (2(I5,1X3E15.7,3X))                 38900200
(   6X3E15.7,44H---(INTERNALLY GENERATED ORIENTATION VECTOR))           38900210
(1HO/4(27H POINT  CONNECTING POINTS  ) /4(I5,I7,1H,I3,1H,I3,1H,I3,3X))  38900220
(75H-ONE OR MORE OF ABOVE NAMES OR INSTRUCTIONS IS INCORRECT. THIS RUN A38900230
BORTED.)    (50H- HI- I HOPE YOU ARE GLAD I STOPPED THIS- K. TOUPS   )  38900240
(1H118X12A6/19X12A6/8H-RUN NO.I4,28H   DATA USED FOR THIS RUN- *1A6,1H*138900250
A6,1H*/2(39X,1H*1A6,1H*1A6,1H*/))                                       38900260
( 66H-A NONPLANAR SURFACE CANNOT BE USED AS SURFACE 1-THIS RUN ABORTED.)38900270
( 61H-TXFRM DATA MUST BE IN CLASS 9. THIS RUN CANNOT BE CONTINUED.)     38900280
(63H-CLASS 7 OR 9 DATA CANNOT BE TRANSFORMED. THIS REQUEST ABORTED.)    38900290
(18H-NONE OF SURFACE *2A6,22H* IS SEEN BY SURFACE *2A6,1H*//104H IF THE 38900300
ABOVE RESULT IS UNEXPECTED, DO NOT BECOME ALARMED- IT HAPPENS TO THE BES38900310
T OF EM. JUST CHECK YOUR/ 99H DATA-ESPECIALLY BE SURE THAT YOU ENTERED A38900320
LL POINTS IN COUNTERCLOCKWISE ORDER, AS THEY APPEAR WHEN/ 90H FACING THE38900330
 ACTIVE SIDE OF THE SURFACE, AND DERIVED FROM A RIGHT-HANDED COORDINATE 38900340
SYSTEM.)                                                                38900350
(10HOSURFACE *1A6,22H* WAS TRANSFORMED BY *1A6,19H* TO THE FOLLOWING-)  38900360
(31HOTHE FORM FACTOR FROM SURFACE *2A6,14H* TO SURFACE *2A6,3H* =F8.5)  38900370
(31HOTHE EXCHANGE COEFFICIENT (FA)=E14.5,9H SQ UNITS/1HO18X18HTHE MAPPIN38900380
G AREA =E14.7,9H SQ UNITS)                                              38900390
( 26H THE AREA OF THAT PART IS    E14.7, 10H SQ UNITS./34H THE AREA OF T38900400
HE TOTAL SURFACE IS E14.7,10H SQ UNITS. )                               38900410
(22HOTHE AREA OF SURFACE *2A6,3H* =  E14.7,10H SQ UNITS.)               38900420
```

Figure 55. Variable Formats (Sheet 1 of 2)

```
( 16HOWARNING-WARNING/  77H THE MAPPING AREA IS MORE THAN 1 PERCENT DIFF38900430
ERENT FROM THE AREA IN SURFACE *2A6,  9H* SEEN BY/10H SURFACE *2A6, 71H*38900440
. THIS MAY BE CAUSED BY WRONG SURFACE DATA ENTRY (THE SURFACE BOUNDARY/ 38900450
105H CROSSES A MAPPING LINE IN MORE THAN TWO PLACES), OR TOO COARSE INCR38900460
EMENTS.  THE FACTOR MAY BE INCORRECT.)                                  38900470
( 83H-THE FOLLOWING ARE THE (FINAL) SURFACE COORDINATES USED FOR THE FAC38900480
TOR COMPUTATION-)                                                       38900490
( 47HOCOORDINATES OF POINTS ON BOUNDARY OF SURF    *2A6,21H* FOR EACH Y 38900500
INTERVAL     /1H06X,6HX-LEFT9X,7HX-RIGHT10X,1HY22X,6HX-LEFT9X,7HX-RIGHT138900510
0X,1HY// (1X,3E15.7,10X,3E15.7))                                        38900520
(30H-NO. OF HORIZONTAL INCREMENTS=I3,29H  NO. OF VERTICAL INCREMENTS=I3)38900530
(74H-THE FOLLOWING ARE PLANE POINT CONFIGURATION FACTORS COMPUTED FOR TH38900540
IS RUN/48H LOWEST GRID LINE FIRST, FROM X-LEFT TO X-RIGHT.///)          38900550
(63H-THE ALLOWABLE GRAND TOTAL OF CLASS 4,5,6 SURFACES IS EXCEEDED.)    38900560
(67H-YOU HAVE EXCEEDED THE MAX. GRAND TOTAL OF ALL SURFACE DATA ENTRIES)38900570
(66H ALLOWED WHEN A DETAILED SILHOUETTE GENERATOR OUTPUT IS REQUESTED.) 38900580
(66H-MAPPING    SURFACE 2 SILHOUETTE COMPUTED FROM MAPPING POINT SHOWN/ 38900590
 8H LINE PT)                                                 (6E16.7)   38900600
(1H+32X10A6)(25H-ONLY A PART OF SURFACE *2A6,16H* SEES SURFACE *2A6,1H*)38900610
```

Figure 55. Variable Formats (Sheet 2 of 2)

APPENDIX C. COORDINATE TRANSFORMATION

PRIMARY TRANSFORMATION

As indicated in Section I, the surface coordinate transformation technique employed by the program does not require transformation parameters such as direction cosines, Euler angles and translation terms to be entered as input data to the program for transformation purposes. Instead, the x, y, and z coordinates of three points, not in a line, are given from the new origin, or to the new position of the surface. These data are then used to derive the rotational and translation terms required to transform the remaining surface data to the new origin or surface position.

The classical equations for transformation of rectangular coordinates in space are employed for both primary and auxiliary transformation. The new x, y, and z coordinates in terms of the old coordinates are:

$$x = x'\cos\alpha_1 + y'\cos\alpha_2 + z'\cos\alpha_3 + H \tag{1}$$

$$y = x'\cos\beta_1 + y'\cos\beta_2 + z'\cos\beta_3 + L \tag{2}$$

$$z = x'\cos\gamma_1 + y'\cos\gamma_2 + z'\cos\gamma_3 + K \tag{3}$$

Note that there are 9 unknown direction cosines and 3 translation terms, or a total of 12 unknowns. It is clear that the coordinates of four points from the new origin are required if these equations are to be used directly to determine the unknown parameters.

It can be shown, however, that the coordinates of three points (not in a line) are sufficient and necessary to fix the position of a surface in any rectangular coordinate system. It appears, therefore, that another point must be made available for solution of the above equations, or another technique developed which directly requires only three points. The three-point solution has been developed but not programmed for this version of CONFAC. Solution of the classical equations is straightforward, but requires the extra point (not in the plane of the other three). Rather than require the user to supply the extra point in data, it was decided to generate the point as a unit normal vector above the second point given in transformation data. This extra point must, of course, be generated in both old and new coordinate systems.

Figure 56 depicts a primary transformation of surface A from the old (primed) to the new (unprimed) coordinate system. Note that the primary transformation shown affects only one surface, whereas both surfaces are involved in the auxiliary transformation, which will be discussed in more detail later in this Appendix. The angles (α, β and γ) shown in Equations 1, 2, and 3 are related in the following manner with the primed and unprimed coordinate axes shown in Figure 56:

$$\alpha_1 = \angle 0'X'0X, \ \alpha_2 = \angle 0'Y'0X, \ \alpha_3 = \angle 0'Z'0X$$

$$\beta_1 = \angle 0'X'0Y, \ \beta_2 = \angle 0'Y'0Y, \ \beta_3 = \angle 0'Z'0Y$$

$$\gamma_1 = \angle 0'X'0Z, \ \gamma_2 = \angle 0'Y'0Z, \ \gamma_3 = \angle 0'Z'0Z$$

Given the coordinates of points 2, 5 and 6 in surface A, and the generated point U, from both the old and new coordinate systems, we may write four independent equations similar to Equation 1. Using Equation 1, the resulting set of equations in x is:

$$x_2 = x'_2 \cos \alpha_1 + y'_2 \cos \alpha_2 + z'_2 \cos \alpha_3 + H \tag{4}$$

$$x_5 = x'_5 \cos \alpha_1 + y'_5 \cos \alpha_2 + z'_5 \cos \alpha_3 + H \tag{5}$$

$$x_6 = x'_6 \cos \alpha_1 + y'_6 \cos \alpha_2 + z'_6 \cos \alpha_3 + H \tag{6}$$

$$x_U = x'_U \cos \alpha_1 + y'_U \cos \alpha_2 + z'_U \cos \alpha_3 + H \tag{7}$$

We may similarly write two more sets of equations in y and z similar to Equations 2 and 3, for a total of twelve independent equations. Each set of four simultaneous equations is solved by Cramer's Rule (Reference 2) for the unknown direction cosines relating the old y' and z' axes to the new x, y, and z axes.

For example, using the set developed above for Equation 1 (Equations 4, 5, 6 and 7), the coefficient determinant D is

$$D = \begin{vmatrix} x'_2 & y'_2 & z'_2 & 1 \\ x'_5 & y'_5 & z'_5 & 1 \\ x'_6 & y'_6 & z'_6 & 1 \\ x'_U & y'_U & z'_U & 1 \end{vmatrix} \tag{8}$$

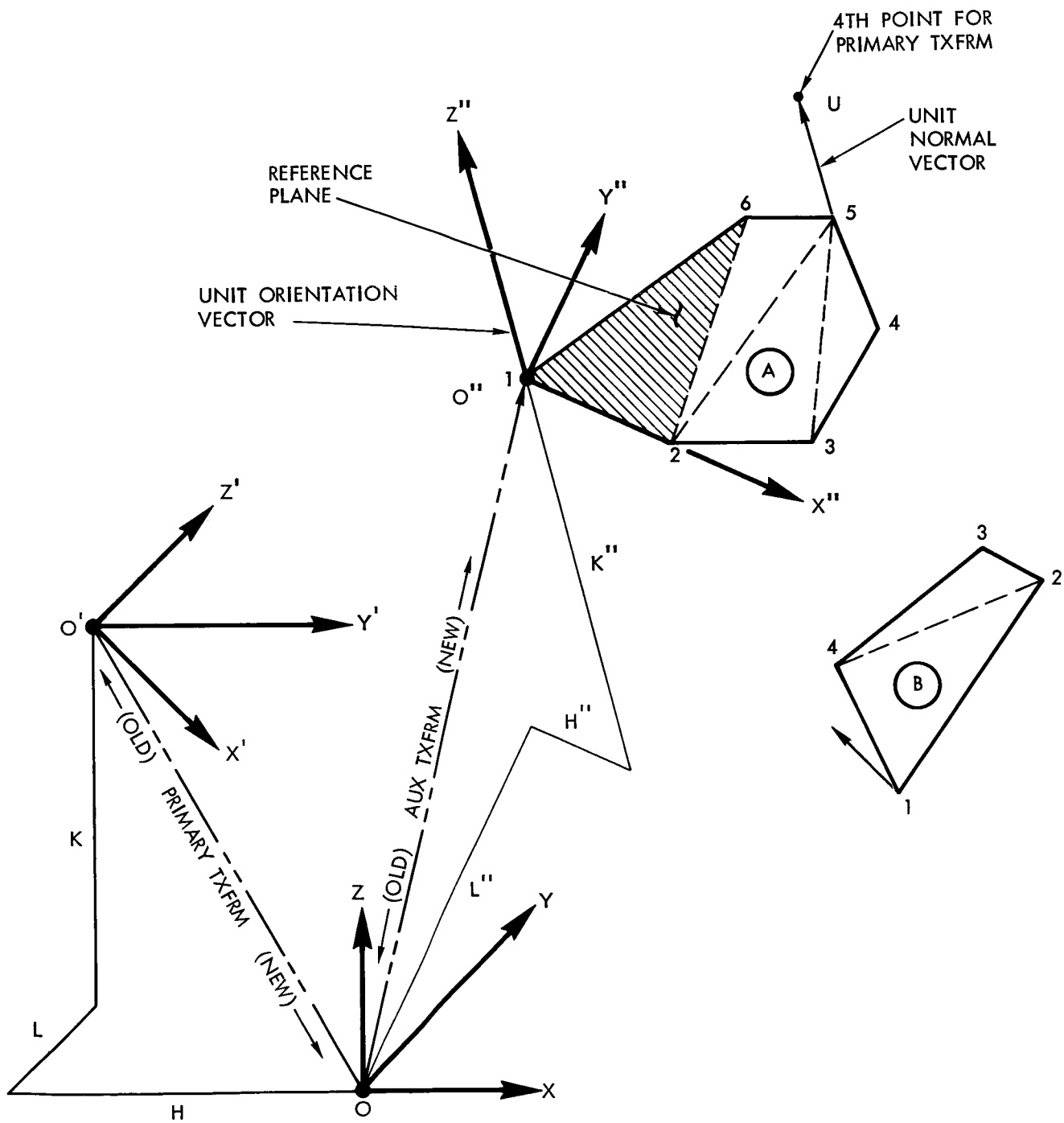

Figure 56. Coordinate Transformation

By Cramer's Rule, we successively replace the elements in each column of the set with the respective element on the left of each equation in the set. For example, the solution for $\cos \alpha_2$ is:

$$\cos \alpha_2 = \frac{\begin{vmatrix} x_2' & x_2' & z_2' & 1 \\ x_5' & x_5' & z_5' & 1 \\ x_6' & x_6' & z_6' & 1 \\ x_U' & x_U' & z_U' & 1 \end{vmatrix}}{D} \tag{9}$$

and similarly,

$$\cos \alpha_3 = \frac{\begin{vmatrix} x_2' & y_2' & x_2' & 1 \\ x_5' & y_5' & x_5' & 1 \\ x_6' & y_6' & x_6' & 1 \\ x_U' & y_U' & x_U' & 1 \end{vmatrix}}{D} \tag{10}$$

The above process is repeated for the solution of $\cos \beta_2$, $\cos \beta_3$, $\cos \gamma_2$, and $\cos \gamma_3$, using the sets developed for y and z. The coefficient determinant is the same for all sets, because the coefficients of the unknowns in all sets are identical.

To increase computational efficiency, repeated factors in the expanded determinants are computed only once for each set. Also, considerable economy results in computing the unknown direction cosines $\cos \alpha_1$, $\cos \beta_1$, $\cos \gamma_1$, as the cross product of the corresponding direction cosines of the other (y and z) axes:

$$\cos \alpha_1 = \cos \beta_2 \cos \gamma_3 - \cos \gamma_2 \cos \beta_3 \tag{11}$$

$$\cos \beta_1 = \cos \gamma_2 \cos \alpha_3 - \cos \alpha_2 \cos \gamma_3 \tag{12}$$

$$\cos \gamma_1 = \cos \alpha_2 \cos \beta_3 - \cos \beta_2 \cos \alpha_3 \tag{13}$$

The translation components H, L and K are computed by substituting the coordinates of the point below point U in the surface to be transformed into Equations 1, 2 and 3, along with the known values of direction cosines. For the surface A shown in Figure 56, using point 5,

$$H = x_5 - x_5' \cos \alpha_1 - y_5' \cos \alpha_2 - z_5' \cos \alpha_3 \tag{14}$$

$$L = y_5 - x_5' \cos \beta_1 - y_5' \cos \beta_2 - z_5' \cos \beta_3 \tag{15}$$

$$K = z_5 - x_5' \cos \gamma_1 - y_5' \cos \gamma_2 - z_5' \cos \gamma_3 \tag{16}$$

The program now transforms all point coordinates in surface A from the old to the new system by direct substitution in Equations 1, 2 and 3.

The method outlined above will always perform the transformation desired, providing the three points selected are (1) sufficiently separated in space, (2) accurately computed, and (3) do not form a straight line in space. Because the fourth point U is always computed <u>outside</u> the plane of the other three, the coefficient determinant D can never be 0. Hence, by Cramer's Rule, a unique solution must always exist.

AUXILIARY TRANSFORMATION

An auxiliary transformation transforms the coordinates of both surfaces into the reference plane of a specified surface, the "control" surface. In Figure 56, surface A is the control surface; the auxiliary transformation depicted transforms both surface A and B from the unprimed (old) system to the double-primed (new) system. In general, the origin 0'' in the control surface is always point 1 in the control surface coordinate array. It may not always be the first point entered in input surface data; if a bisection of the surface occurs, and the original point 1 is not seen by the other surface (assumed planar), then a new point 1 will be computed. The new point will be used as the orgin 0''. The same processing occurs for internally generated surfaces. Only surfaces classed as plane surfaces may be control surfaces, i.e., classes 1, 3, 4 and planar 6. For example, if both surface A and B in Figure 56 are plane and bisect each other, <u>two</u> auxiliary transformations would occur to facilitate surface reconstruction. Actually, if surface A were entered as surface 1, the first auxiliary transformation to occur would be to point 1 in surface B, rather than surface A. This would not occur, however, if surface A were <u>not</u> bisected by surface B. In any case, the last transformation always is to point 1 in surface 1, so that mapping and factor computation may proceed directly.

The processing of an auxiliary transformation differs from the primary transformation because unknowns may be more readily computed from available data. Equations 1, 2 and 3 are rewritten for the auxiliary old and new coordinate systems,

$$x'' = x \cos \alpha_1 + y \cos \alpha_2 + z \cos \alpha_3 + H'' \tag{17}$$

$$y'' = x \cos \beta_1 + y \cos \beta_2 + z \cos \beta_3 + L'' \tag{18}$$

$$z'' = x \cos \gamma_1 + y \cos \gamma_2 + z \cos \gamma_3 + K'' \tag{19}$$

The angles are defined as follows, referring to Figure 53:

$$\alpha_1 = \angle 0X0''X'', \ \alpha_2 = \angle 0Y0''X'', \ \alpha_3 = \angle 0Z0''X''$$

$$\beta_1 = \angle 0X0''Y'', \ \beta_2 = \angle 0Y0''Y'', \ \beta_3 = \angle 0Z0''Y''$$

$$\gamma_1 = \angle 0X0''Z'', \ \gamma_2 = \angle 0Y0''Z'', \ \gamma_3 = \angle 0Z0''Z''$$

Because the 0''X'' axis in the new system is directed along the line segment formed by the first and second point in the control surface, the direction cosines related to that axis are readily computed.

The length of line $\overline{12}$ in surface A is

$$LS_{12} = \sqrt{(x_2 - x_1)^2 + (y_2 - y_1)^2 + (z_2 - z_1)^2},$$

and the direction cosines relating the new 0''X'' axis to the old 0X, 0Y and 0Z axes are:

$$\cos \alpha_1 = (x_2 - x_1)/LS_{12} \tag{20}$$

$$\cos \alpha_2 = (y_2 - y_1)/LS_{12} \tag{21}$$

$$\cos \alpha_3 = (z_2 - z_1)/LS_{12} \tag{22}$$

Because the new 0''Z'' axis is directed along the surface unit orientation vector (point 0 above surface A) the cosines relating that axis to the old 0X, 0Y and 0Z axes are

$$\cos \gamma_1 = x_0 - x_1 \tag{23}$$

$$\cos \gamma_1 = y_0 - y_1 \tag{24}$$

$$\cos \gamma_1 = z_0 - z_1 \tag{25}$$

The remaining direction cosines are computed by cross products of the X'' and Z'' axis unit base vectors (direction cosines).

$$\cos \beta_1 = \cos \gamma_2 \cos \alpha_3 - \cos \alpha_2 \cos \gamma_3 \tag{26}$$

$$\cos \beta_2 = \cos \alpha_1 \cos \gamma_3 - \cos \gamma_1 \cos \alpha_3 \tag{27}$$

$$\cos \beta_3 = \cos \gamma_1 \cos \alpha_2 - \cos \alpha_1 \cos \gamma_2 \tag{28}$$

The unknown translation terms are determined from Equations 17, 18 and 19 for point 1 in surface A ($x_1'' = 0$, $y_1'' = 0$, $z_1'' = 0$).

$$H'' = - x_1 \cos \alpha_1 - y_1 \cos \alpha_2 - z_1 \cos \alpha_3 \tag{29}$$

$$L'' = - x_1 \cos \beta_1 - y_1 \cos \beta_2 - z_1 \cos \beta_3 \tag{30}$$

$$K'' = - x_1 \cos \gamma_1 - y_1 \cos \gamma_2 - z_1 \cos \gamma_3 \tag{31}$$

The program now transforms all coordinates in surface A <u>and</u> surface B to the new system by using Equations 17, 18 and 19.

APPENDIX D. COMPUTATION OF SURFACE AREA OF INTERNALLY GENERATED SURFACES

In Figure 57, View J-J shows a view of the surface of a right elliptical cone between the two arbitrary cross-sections indicated in the isometric sketch of the cone. Because the program internal surface generator uses the elliptical cross-section as the basic generating element, elemental surface areas such as area ABCD in Figure 57 are trapezoids having, in general, unequal nonparallel sides. Also, because each elemental surface is developed by equal elliptical parametric angles, one need compute the area of only one elemental surface for each pair of cross-sections (providing, of course, the cross-sections are similar).

The plane area of trapezoid ABCD is

$$A_T = \frac{1}{2} h (L_1 + L_2). \tag{1}$$

L_1 and L_2 are readily computed from the x, y coordinates of points A, B, C and D;

$$L_1 = \sqrt{(x_C - x_A)^2 + (y_C - y_A)^2} \tag{2}$$

$$L_2 = \sqrt{(x_D - x_B)^2 + (y_D - y_B)^2} \tag{3}$$

The trapezoid height h is computed indirectly from the projected area A_p of the trapezoid on the XY plane in the following manner:

$$h = \sqrt{h_p^2 + Z^2} \tag{4}$$

where h_p is the projected length of trapezoid height h, and Z is the distance between cross-sections.

The projected area of ABCD is:

$$A_p = \frac{1}{2} h_p (L_1 + L_2). \tag{5}$$

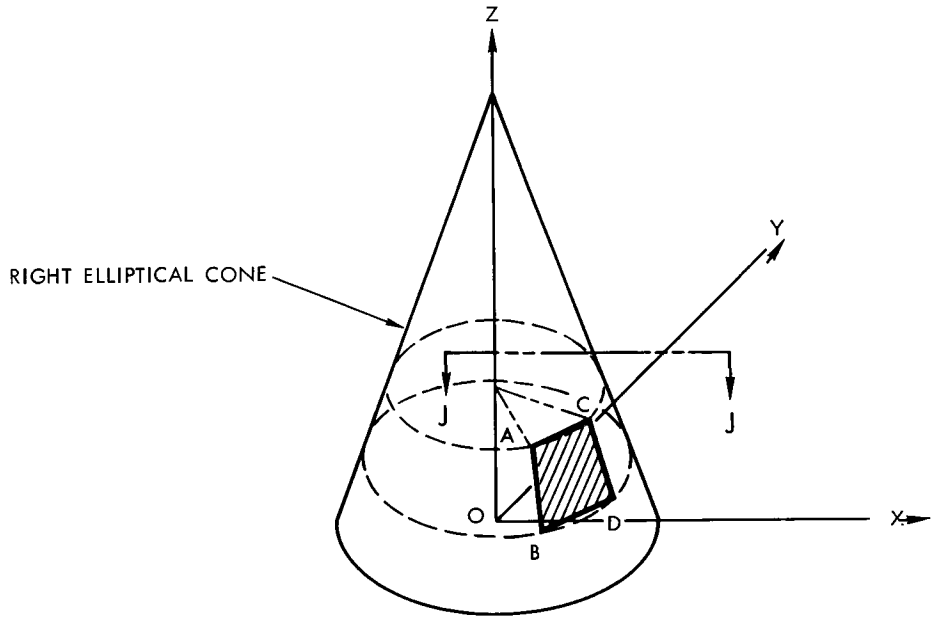

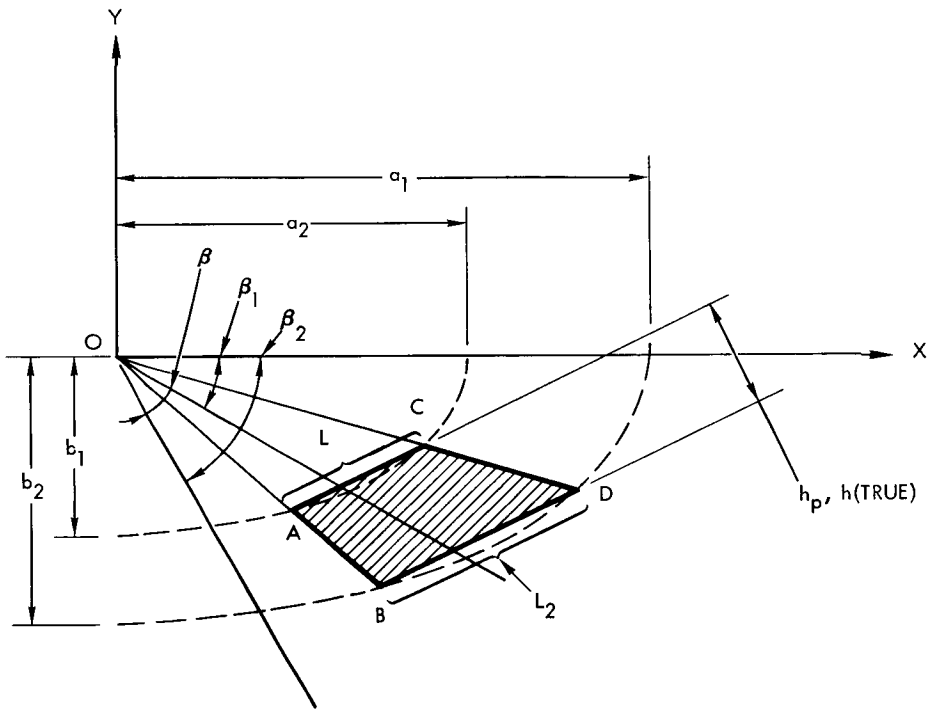

VIEW J-J

Figure 57. Surface Area Geometry of Internally Generated Polyhedra

Solving for h_p in Equation 5:

$$h_p = \frac{2\ A_p}{(L_1 + L_2)} \tag{6}$$

The area A_p is computed from the trapezoid (x, y) coordinates in the following manner:

Noting triangles BOD and AOC

$$A_p = \text{Area}\,\Delta\,\text{BOD} - \text{Area}\,\Delta\,\text{AOC} \tag{7}$$

It is desirable for computational efficiency to compute A_p using known parameters. In this case, sin β is known and is used. The parametric equations of the ellipse are:

$$x = a \cos \theta \tag{8}$$

$$y = b \sin \theta \tag{9}$$

where a is the semi-major axis, b is the semi-minor axis and θ is the parametric angle. In Figure 54, angle β_1 defines points A and B and angle β_2 defines points C and D. Angle $\beta = \beta_2 - \beta_1$.

The area of triangle AOC can be computed by vector cross products,

$$A_{AOC} = \frac{1}{2}(x_A\, y_C - x_C\, y_A) \tag{10}$$

From Equations 8 and 9 for the parametric angles β_1 and β_2 defining points A and C,

$$x_A = a_1 \cos \beta_1, \quad y_A = b_1 \sin \beta_1 \tag{11}$$

$$x_C = a_1 \cos \beta_2, \quad y_C = b_1 \sin \beta_2 \tag{12}$$

Substituting Equations 11 and 12 in Equation 10,

$$A_{AOC} = \frac{1}{2} a_1 b_1 (\cos \beta_1 \sin \beta_2 - \cos \beta_2 \sin \beta_1)$$

$$A_{AOC} = \frac{1}{2} a_1 b_1 \sin (\beta_2 - \beta_1) \tag{13}$$

$$A_{AOC} = \frac{1}{2} a_1 b_1 \sin \beta$$

A similar derivation is developed to obtain the area of triangle BOD.

$$A_{BOD} = \frac{1}{2} a_2 b_2 \sin \beta \tag{14}$$

Substituting Equations 13 and 14 in Equation 7,

$$A_p = \frac{1}{2} \sin \beta \ (a_2 b_2 - a_1 b_1) \tag{15}$$

Substituting Equation 15 into Equation 6,

$$h_p = \frac{2\left[\frac{1}{2} \sin \beta \ (a_2 b_2 - a_1 b_1)\right]}{L_1 + L_2} \tag{16}$$

Substituting Equation 16 into Equation 4,

$$h = \sqrt{\left[\frac{\sin \beta \ (a_2 b_2 - a_1 b_1)}{L_1 + L_2}\right]^2 + Z^2} \tag{17}$$

Finally, substituting Equation 17 into Equation 1,

$$A_T = \frac{L_1 + L_2}{2} \sqrt{\left[\frac{\sin \beta \ (a_2 b_2 - a_1 b_1)}{L_1 + L_2}\right]^2 + Z^2}$$

Rearranging terms,

$$A_T = \frac{1}{2} \sqrt{\left[\sin \beta \ (a_2 b_2 - a_1 b_1)\right]^2 + \left[Z \ (L_1 + L_2)\right]^2} \tag{18}$$

The total surface area is computed by repeated evaluation of Equation 18 for the particular surface generated.

APPENDIX E. DERIVATION OF CONFIGURATION FACTOR TO A SPHERE

The analytic solution of the configuration factor to a sphere depends upon the position of the sphere relative to the plane of surface 1. This is clearly demonstrated geometrically by using the Nusselt unit sphere projection as shown in Figure 58. Three unique solutions are apparent from the five different sphere positions; Ib and IIIa represent "limit" values in each case. The unit sphere projections (crosshatched areas) shown in the lower part of Figure 58 correspond respectively to sphere positions (not to scale) depicted in the upper half. Case I results when the sphere is above (Ia) and/or touching (Ib) the plane of surface 1. The locus on the Nusselt hemisphere base is an ellipse, and varies from a circle (when the sphere is vertically over the point 0) to the single tangency position shown in Ib. When the sphere goes below the plane of surface 1, the Case II locus appears, and is formed by the ellipse boundary on the left and the unit circle boundary on the right.

The locus projected on the unit sphere surface is a circle, in every case. The radius, b, of the circle becomes the semi-major axis of the projected ellipse. By similar triangles,

$$\frac{b}{1} = \frac{R}{D}$$

$$b = \frac{R}{D} \tag{1}$$

where D = distance from center of sphere to origin of the unit sphere and R is the sphere radius. The semi-minor axis, a, of the ellipse is the projection on the unit circle of b; again by similar triangles,

$$\frac{Z}{D} = \frac{a}{b}$$

or

$$a = b\,\frac{Z}{D} = \frac{RZ}{D^2} \tag{2}$$

The area of the ellipse is

$$A = \pi ab = \pi\frac{R^2 Z}{D^3} \tag{3}$$

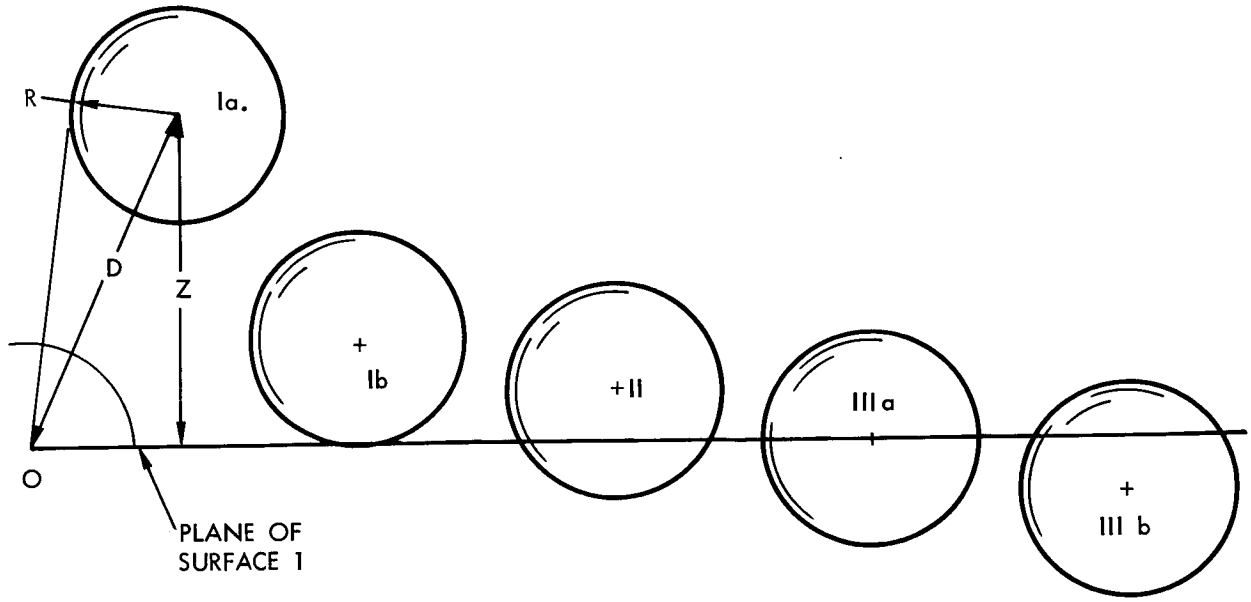

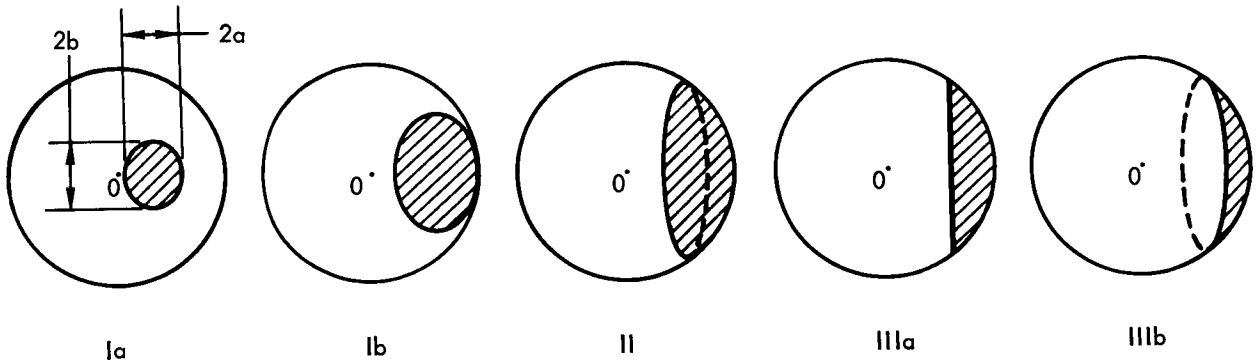

NUSSELT UNIT SPHERE PROJECTIONS

(NOT TO ANY SCALE)

Figure 58. Areas Involved in Configuration Factor to Spheres

The configuration factor for Case I is the area of the ellipse divided by the area of the unit radius circle,

$$c_I = \frac{\pi \frac{R^2 Z}{D^3}}{\pi} .$$

$$c_I = \frac{R^2 Z}{D^3} , \quad Z \geqq R \tag{4}$$

The computation of Case III proceeds as follows. Referring to Figure 59, a detailed drawing of the upper half of the Case IIIb locus, the area to be determined is area ACB.

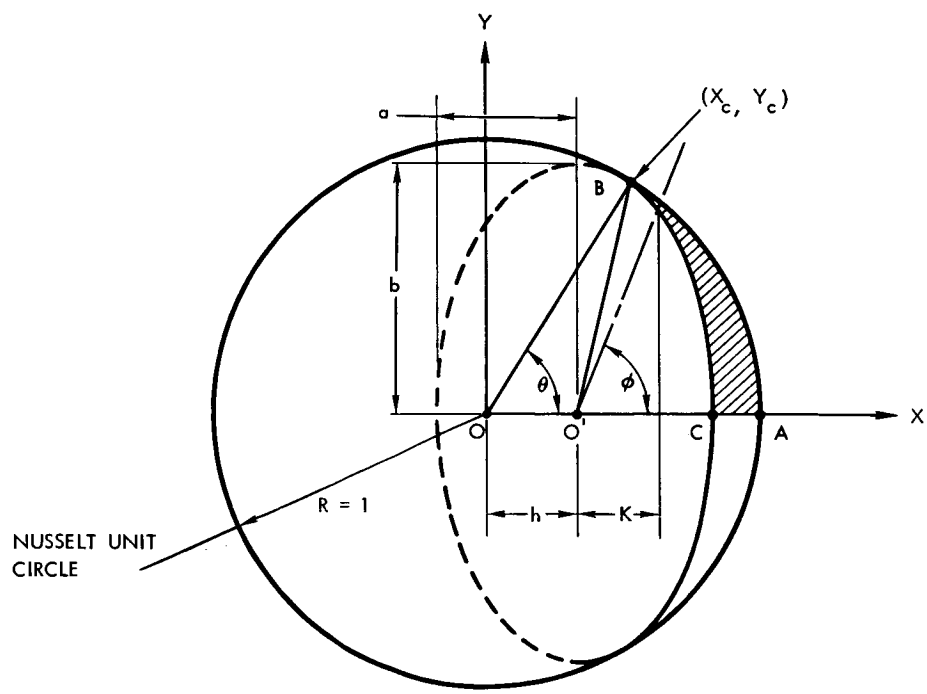

Figure 59. Case IIIb Detail Geometry

By inspection,

$$A_{ACB} = A_{AOB} - A_{O'OB} - A_{CO'B} \tag{5}$$

Area AOB is a sector of the unit circle, R = 1,

$$A_{AOB} = \frac{1}{2} R^2\theta = \frac{1}{2} \theta \tag{6}$$

Given h, the distance between centers O and O', and Y_C, the value of y at the tangency point between the ellipse and the circle, the area of the triangle O'OB is

$$A_{O'OB} = \frac{1}{2} h\ y_c \tag{7}$$

The area CO'B is an elliptical sector defined by the parametric angle ϕ at $(x_c,\ y_c)$ the point of tangency,

$$A_{CO'B} = \frac{ab}{2} \phi \tag{8}$$

Inserting Equations 6, and 7 and 8 into Equation 5,

$$A_{ACB} = \frac{1}{2} (\theta - hy_c - ab\phi) \tag{9}$$

The unknowns θ, h, y_c and ϕ must be evaluated in terms of R, Z and D. The tangency point x_c, y_c, is determined as follows. The equation of the ellipse when translated a distance h in the x direction from the origin O is

$$\frac{(x - h)^2}{a^2} + \frac{y^2}{b^2} = 1 \tag{10}$$

The equation of the unit circle is

$$x^2 + y^2 = 1 \tag{11}$$

At the intersection point the slopes are equal. Taking the first derivative of Equation 10,

$$\frac{2}{a^2} (x - h)\ dx + \frac{2y}{b^2} dy = 0$$

Rearranging,

$$\frac{dy}{dx} = \frac{b^2}{2y}\left[\frac{2}{a^2}(h - x)\right] = \frac{b^2}{a^2}\frac{(h - x)}{y} \tag{12}$$

The slope at any point x, y on the circle is:

$$\frac{dy}{dx} = -\frac{x}{y} \tag{13}$$

Equating Equations 12 and 13,

$$\frac{b^2}{a^2}\frac{(h - x)}{y} = -\frac{x}{y}$$

Solving for h, at $x = x_c$ and $y = y_c$,

$$h = x_c \frac{(b^2 - a^2)}{b^2} \tag{14}$$

Substituting Equation 14 into Equation 10,

$$\frac{\left[x_c - x_c \frac{(b^2 - a^2)}{b^2}\right]^2}{a^2} + \frac{y_c^2}{b^2} = 1$$

Reducing and rearranging terms, and solving simultaneously with Equation 11:

$$\left(\frac{a}{b}\right)^2 x_c^2 + y_c^2 = b^2 \tag{15}$$

$$x_c^2 + y_c^2 = 1$$

Subtracting Equation 11 from Equation 15,

$$x_c^2\left[\left(\frac{a}{b}\right)^2 - 1\right] = b^2 - 1$$

Solving for x_c,

$$x_c^2 = \frac{b^2 - 1}{\left(\frac{a}{b}\right)^2 - 1} \tag{16}$$

$$x_c = b\sqrt{\frac{1 - b^2}{b^2 - a^2}} \tag{17}$$

Solving for y_c in Equation 11,

$$y_c = \sqrt{1 - x_c^2} \tag{18}$$

Substituting Equation 1 and 2 into Equation 17,

$$x_c = \sqrt{\frac{R^2 - D^2}{Z^2 - D^2}} \tag{19}$$

Substituting Equation 1, 2 and 16 into Equation 18,

$$y_c = \sqrt{\frac{Z^2 - R^2}{Z^2 - D^2}} \tag{20}$$

The angle ϕ may be defined as

$$\phi = \tan^{-1}\frac{y_c}{K} = \tan^{-1}\frac{y_c}{\sqrt{b^2 - y_c^2}} \tag{21}$$

Substituting Equation 1 and 20 into Equation 21,

$$\phi = \tan^{-1}\left[\frac{D}{|Z|} \cdot \sqrt{\frac{Z^2 - R^2}{R^2 - D^2}}\right] \tag{22}$$

The angle θ may be defined as

$$\theta = \tan^{-1} \frac{y_c}{x_c} \tag{23}$$

Substituting Equations 19 and 20 into Equation 23,

$$\theta = \tan^{-1} \sqrt{\frac{Z^2 - R^2}{R^2 - D^2}} \tag{24}$$

Substituting Equations 1, 2 and 19 into Equation 14,

$$h = \frac{D^2 - Z^2}{D^2} \sqrt{\frac{R^2 - D^2}{Z^2 - D^2}} \tag{25}$$

The parameter hy_c in Equation 9 is evaluated by multiplying Equations 20 and 25,

$$hy_c = \left[\frac{D^2 - Z^2}{D^2} \sqrt{\frac{R^2 - D^2}{Z^2 - D^2}} \right] \frac{Z^2 - R^2}{Z^2 - D^2}$$

$$hy_c = \frac{\sqrt{D^2 - R^2} \cdot \sqrt{R^2 - Z^2}}{D^2}$$

$$hy_c = \left(\frac{D^2 - R^2}{D^2} \right) \sqrt{\frac{R^2 - Z^2}{D^2 - R^2}} \tag{26}$$

Let

$$\alpha = D^2 - R^2 \tag{27}$$

and

$$\beta = \sqrt{\frac{R^2 - Z^2}{\alpha}} \tag{28}$$

Substituting Equations 27 and 28 into Equations 22, 24 and 26, respectively,

$$\phi = \tan^{-1} \left[\frac{D}{|Z|} \beta \right] \tag{29}$$

$$\theta = \tan^{-1} \beta \tag{30}$$

and

$$hy_c = \frac{\alpha \beta}{D^2} \tag{31}$$

Finally, substitute Equations 29, 30 and 31 into 9; the actual area projected on the hemisphere base is twice Area ACB and is divided by the base area to yield the configuration factor.

$$c_{III} = \frac{1}{\pi} \left[\left(\tan^{-1} \beta \right) - \frac{R^2 |Z|}{D^3} \left(\tan^{-1} \frac{\beta D}{|Z|} \right) - \frac{\alpha \beta}{D^2} \right] \tag{32}$$

where

$$\alpha = D^2 - R^2$$

$$\beta = \sqrt{\frac{R^2 - Z^2}{\alpha}} \quad , \quad Z \leqq 0 \text{ and } Z^2 \leqq R^2$$

By inspection of Figure 58, the projected area for Case II is the sum of the ellipse evaluated by the Case I formula and the crescent shaped area determined by the Case III formula,

$$c_{II} = c_I + c_{III}, \quad 0 < Z < R \tag{33}$$

In summary, referring to Figure 55,

$$c_I = \frac{R^2 Z}{D^3} \quad , \quad Z \geqq R$$

$$c_{III} = \frac{1}{\pi} \left[\left(\tan^{-1} \beta \right) - \frac{R^2 |Z|}{D^3} \left(\tan^{-1} \frac{\beta D}{|Z|} \right) - \frac{\alpha \beta}{D^2} \right]$$

where

$$\alpha = D^2 - R^2, \quad \beta = \sqrt{\frac{R^2 - Z^2}{\alpha}}$$

$$Z \leqq 0, \quad Z^2 \leqq R^2$$

$$c_{II} = c_I + c_{III}, \quad 0 < Z < R$$