NASA CR 71507

VOYAGER SPACECRAFT SYSTEM

FINAL TECHNICAL REPORT

VOLUME C
DESIGN FOR OPERATIONAL SUPPORT EQUIPMENT

prepared for

JET PROPULSION LABORATORY
CALIFORNIA INSTITUTE OF TECHNOLOGY
PASADENA, CALIFORNIA

UNDER
CONTRACT NO. 951111 NAS-7-100
JULY 1965

THE BOEING COMPANY • AERO-SPACE DIVISION • SEATTLE, WASHINGTON

THE BOEING COMPANY

SEATTLE, WASHINGTON 98124

LYSLE A. WOOD
VICE PRESIDENT-GENERAL MANAGER
AERO-SPACE DIVISION

July 29, 1965

Jet Propulsion Laboratory
California Institute of Technology
4800 Oak Grove Drive
Pasadena, California

Gentlemen:

This technical report culminates nearly three years of Mariner/Voyager studies at Boeing. During this time, we have gained an appreciation of the magnitude of the task, and feel confident that the experience, resources and dedication of The Boeing Voyager Team can adequately meet the challenge.

The Voyager management task is accentuated by three prime requirements: An inflexible schedule of launch opportunities; the need for an information-retrieval system capable of reliable high-traffic transmission over interplanetary distances; and a spacecraft design flexible enough to accommodate a number of different mission requirements. We believe the technical approach presented here satisfies these design requirements, and that management techniques developed by Boeing for space programs will assure delivery of operable systems at each critical launch date.

Mr. E. G. Czarnecki has been assigned program management responsibility. His group will be ably assisted by Electro-Optical Systems in the area of spacecraft power, Philco Western Development Laboratories will be responsible for telecommunications, and the Autonetics Division, North American Aviation will provide the auto-pilot and attitude reference system. This team has already demonstrated an excellent working relationship during the execution of the Phase IA contract, and will have my full confidence and support during subsequent phases.

This program will report directly to George H. Stoner, Vice President and Assistant Division Manager for Launch and Space Systems. Mr. Stoner has the authority to assign the resources necessary to meet the objectives as specified by JPL.

The Voyager Spacecraft System represents to us more than a business opportunity or a new product objective. We view it as a chance to extend scientific knowledge of the universe while simultaneously contributing to national prestige and we naturally look forward to the opportunity of sharing in this adventure.

Lysle A. Wood

Lysle A. Wood

CONTENTS

Page

INTRODUCTION

1.0 OSE OBJECTIVES AND DESIGN CRITERIA 1-1
1.1 Spacecraft System OSE Objectives and Criteria

2.0 OSE DESIGN CHARACTERISTICS AND RESTRAINTS 2-1
2.1 OSE Sequential Flow Chart
2.2 OSE Design Parameters
2.3 System Level OSE Design Criteria
2.3.1 Mission Dependent Equipment (MDE)
2.3.2 Launch Complex Equipment
2.3.3 System Text Complex
2.3.4 Assembly, Handling, and Shipping Equipments (AHSE)
2.3.5 Subsystem Test Equipment
2.3.6 Spacecraft Simulator
2.3.7 Trend Data Equipment (Software)
2.3.8 Magnetic Mapping Equipment

3.0 SYSTEM LEVEL OSE FUNCTIONAL DESCRIPTIONS 3-1
3.1 Mission Dependent Equipment
3.1.1 Functional Description
3.1.2 Hardware Descriptions
3.1.3 Software - DSIF
3.1.4 Hardware - SFOF
3.1.5 Software - SFOF
3.2 Launch-Complex-Equipment Functional Description
3.2.1 Equipment Identification and Usage
3.2.2 LCE Design Criteria Parameters and Function Definition
3.2.3 LCE Functional Descriptions
3.3 System Test Complex
3.3.1 Equipment Identification and Usage
3.3.2 Design Concepts and Constraints
3.3.3 Applicable Documentation
3.3.4 Functional Description
3.3.5 Interface Definition
3.3.6 Safety Considerations
3.3.7 Testing
3.4 Assembly, Handling, and Shipping Equipment (AHSE)--System Level
3.4.1 Scope
3.4.2 AHSE Classes
3.4.3 Functions Performed
3.4.4 AHSE Critical Parameters
3.4.5 Equipment Functions and Proposed Design

3.5 Spacecraft Simulator
3.5.1 Equipment Identification and Usage
3.5.2 Functional Description
3.5.3 Interface Definition
3.5.4 Performance Parameters
3.5.5 Physical Characteristics
3.5.6 Safety Considerations
3.6 Special System-Level OSE--Functional Descriptions
3.6.1 Trend-Data Equipment
3.6.2 Magnetic Mapping of OSE
3.7 Equipment List

4.0 FUNCTIONAL DESCRIPTION OF SUBSYSTEM LEVEL--OPERATIONAL SUPPORT EQUIPMENT 4-1
4.1 Telecommunications OSE
4.1.1 Equipment Identification and Intended Usage
4.1.2 Design Concepts, Requirements and Constraints
4.1.3 Functional Description
4.1.4 Interface Definition
4.1.5 Performance Parameters
4.1.6 Safety Considerations
4.1.7 Test
4.2 Electrical Power OSE
4.2.1 Equipment Identification and Usage
4.2.2 Requirements and Constraints
4.2.3 Applicable Documentation
4.2.4 SSTE Functional Description
4.2.5 Interface Definition
4.2.6 Performance Parameters
4.2.7 Physical Characteristics and Constraints
4.2.8 Safety
4.2.9 Electrical Power SSTE Checkout and Test
4.3 Propulsion and Reaction Control Subsystem OSE
4.3.1 Equipment Identification and Intended Use
4.3.2 Design Concepts, Requirements and Constraints
4.3.3 Applicable Documents
4.3.4 Functional Description
4.3.5 Interface Definition
4.3.6 Performance Parameters
4.3.7 Physical Characteristics and Constraints
4.3.8 Safety Considerations
4.3.9 Test
4.4 Engineering Mechanics-Operational Support Equipment
4.4.1 Mechanisms-Operational Support Equipment
4.4.2 Pyrotechnic Subsystem Operational Support Equipment
4.5 Space Science
4.6 Attitude Reference and Autopilot OSE Functional Requirements
4.6.1 Equipment Identification and Intended Usage
4.6.2 Design Concepts Requirements and Constraints
4.6.3 Applicable Documents
4.6.4 Functional Description

4.6.5 Signal Interface List
4.6.6 Performance Parameters
4.6.7 Physical Characteristics and Constraints
4.6.8 Safety Considerations
4.6.9 Test
4.7 Central Computer and Sequencer OSE
4.7.1 Equipment Identification and Intended Usage
4.7.2 Design Concept
4.7.3 Applicable Documents
4.7.4 Functional Description
4.7.5 Interface Definitions
4.7.6 Performance Parameters
4.7.7 Physical Characteristics and Constraints
4.7.8 Safety Considerations
4.7.9 Tests

P 1-2
chart 2-A
2-7

INTRODUCTION

INTRODUCTION

In fulfillment of the Jet Propulsion Laboratory (JPL) Contract 951111, the Aero-Space Division of the Boeing Company submits the Voyager Spacecraft Final Technical Report. The complete report, responsive to the documentation requirements specified in the Statement of Work, consists of the five following documents:

VOLUME	TITLE	BOEING DOCUMENT NUMBER
A	Preferred Design Flight Spacecraft and Hardware Subsystems	D2-82709-1
	Part I	
	Section 1.0 Voyager 1971 Mission Objectives and Design Criteria	
	Section 2.0 Design Characteristics and Restraints	
	Section 3.0 System Level Functional Descriptions of Flight Spacecraft	
	Part II	
	Section 4.0 Functional Description for Spacecraft Hardware Subsystems	
	Part III	
	Section 5.0 Schedule and Implementation Plan	
	Section 6.0 System Reliability Summary	
	Section 7.0 Integrated Test Plan Development	
B	Alternate Designs Considered-Flight Spacecraft and Hardware Subsystems	D2-82709-2
C	Design for Operational Support Equipment	D2-82709-3
D	Design for 1969 Test Spacecraft	D2-82709-4
E	Design for Operational Support Equipment for 1969 Test Flight Spacecraft	D2-82709-5

For convenience the highlights of the above documentation have been summarized to give an overview of the scope and depth of the technical effort and management implementation plans produced during Phase IA. This summary is oontained in Volume 0, Program Highlights and Management Philosophy, D2-82709-0. A number of supporting documents are provided to furnish detailed information developed through the course of the contract and to provide substantiating reference material which would not otherwise be readily available to JPL personnel. Additionally, a full scale mock-up of the preferred design spacecraft has been assembled. This mock-up, shown in Figure 1, has been delivered to JPL. The mock-up has been provided with the view that it would be of value to JPL in subsequent Voyager Spacecraft System planning. Mr. William M. Allen, President of The Boeing Company, Mr. Lysle A. Wood, Vice-President and AeroSpace Division General Manager, Mr. George H. Stoner, Vice-President and Assistant Division Manager responsible for Launch and Space Systems activities, and Mr. Edwin G. Czarnecki, Voyager Program Manager, are shown with the mock-up.

During the three month period covered by Contract 95111, Boeing has:

1) Performed system analysis and trade studies necessary to achieve an optimum or preferred design of the Flight Spacecraft.
2) Determined the requirements and constraints which are imposed upon the Flight Spacecraft by the 1971 mission and by the other systems and elements of the project, including the science payload.
3) Developed functional descriptions for the Flight Spacecraft and for each of its hardware subsystems, excluding the science payload.

Figure 1: Preferred Design Mockup

Left to Right:

William M. Allen
Edwin G. Czarnecki
Lysle A. Wood
George H. Stoner

4) Determined the requirements for the Flight Spacecraft associated Operational Support Equipment (OSE) necessary to accomplish the Voyager 1971 mission.

5) Developed a preliminary design of the OSE.

6) Developed functional descriptions for the OSE.

7) Determined the objectives of a 1969 test flight and the design of the 1969 Test Flight Spacecraft using the Atlas/Centaur Launch Vehicle. An alternate test flight program is presented which utilizes the Saturn IB/Centaur Launch Vehicle.

8) Developed functional descriptions for the Flight Spacecraft Bus, and its hardware subsystems, and OSE for the 1969 test spacecraft.

9) Updated and supplemented the Voyager Implementation Plan originally contained in the response to JPL Request for Proposal 3601.

The Voyager program management Team, shown in Figure 2 is under the direction of Mr. Edwin G. Czarnecki. Mr. Czarnecki is the single executive responsible to JPL and Boeing management for the accomplishment of the Voyager Spacecraft Phase IA, and will direct subsequent phases of the program. He reports directly to Mr. George H. Stoner who has the authority to commit those corporate resources necessary to fulfill JPL's Voyager Spacecraft System objectives.

Although Boeing has a technical management capability in all aspects of the Voyager Program, it is planned to extend this capability in depth through association with companies recognized as specialists in certain fields. Use of team members to strengthen Boeing's capability

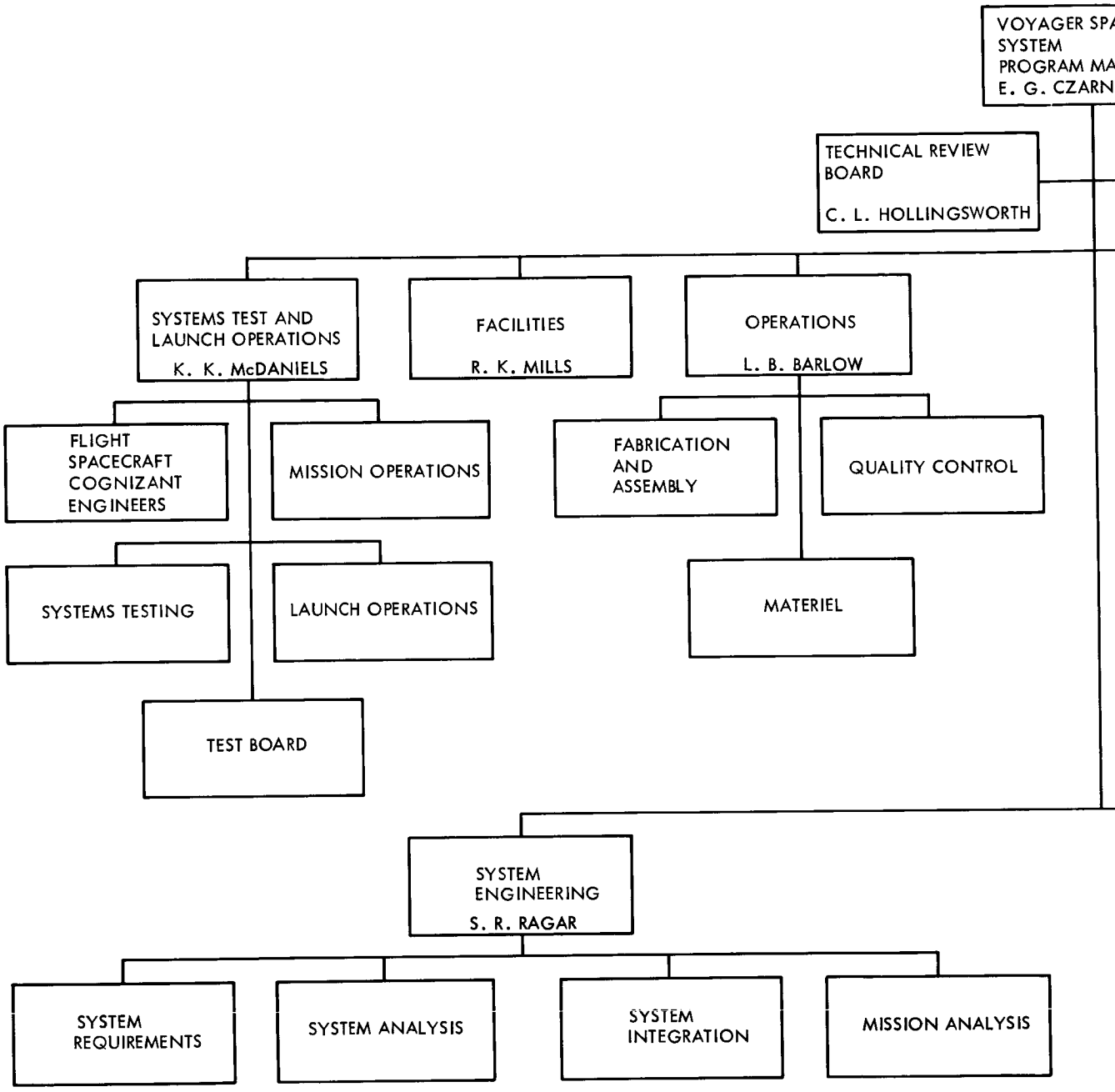
VOYAGER SPA
SYSTEM
PROGRAM MA
E. G. CZARN
TECHNICAL REVIEW BOARD
C. L. HOLLINGSWORTH
SYSTEMS TEST AND LAUNCH OPERATIONS
K. K. McDANIELS
FACILITIES
R. K. MILLS
OPERATIONS
L. B. BARLOW
FLIGHT SPACECRAFT COGNIZANT ENGINEERS
MISSION OPERATIONS
FABRICATION AND ASSEMBLY
QUALITY CONTROL
SYSTEMS TESTING
LAUNCH OPERATIONS
MATERIEL
TEST BOARD
SYSTEM ENGINEERING
S. R. RAGAR
SYSTEM REQUIREMENTS
SYSTEM ANALYSIS
SYSTEM INTEGRATION
MISSION ANALYSIS

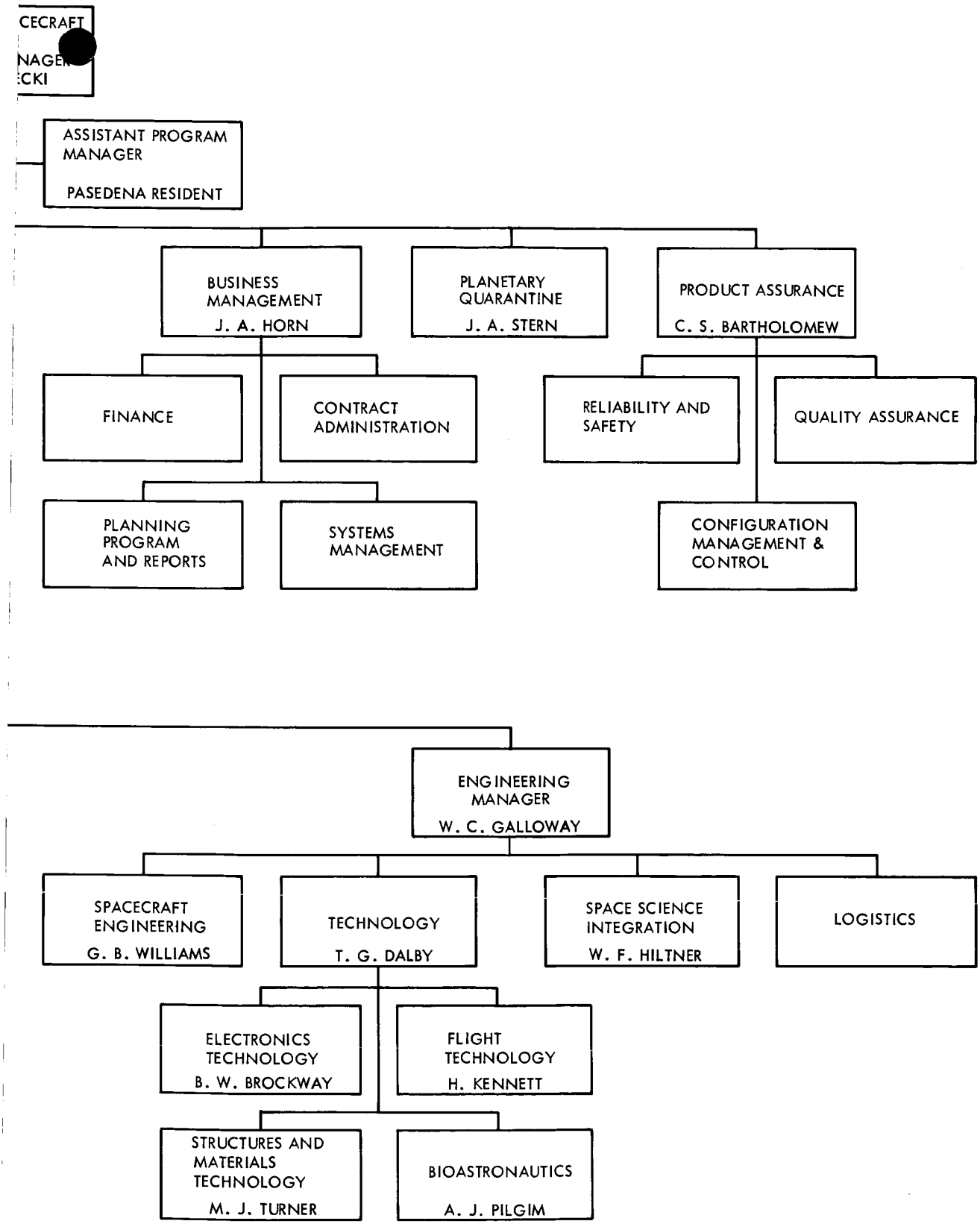

Figure 2 Boeing Voyager
Spacecraft Systems Management Structure

was considered early during pre-proposal activities. The basic concept was to add team members who would complement Boeing experience and capability, and significantly improve the amount and quality of technical and management activities. Based upon competitive considerations including experience and past performance and giving strongest emphasis to technical qualifications and management willingness to support the Voyager effort, Autonetics, Philco Western Development Laboratories, and Electro-Optics Systems were chosen as team members. This team arrangement, subject to JPL approval, is shown in Figure 3. The flight spacecraft design and integration task to be accomplished by this team is illustrated in Figure 4. Discussions leading to the formation of this team were initiated late in 1964, formal work statement agreements have been arrived at, and there has been a continuous and complete free exchange of information and documentation; permitting the Boeing team to satisfy JPL's requirements in depth and with confidence.

BOEING VOYAGER TEAM

VOYAGER SPACECRAFT AND SPACE SCIENCES PAYLOAD INTEGRATION CONTRACTOR

The Boeing Company
Seattle, Washington

Mr. E. G. Czarnecki - Program Manager

SUBCONTRACTOR	SUBCONTRACTOR	SUBCONTRACTOR
Autonetics, North American Aviation Anaheim,California	Philco, Western Development Lab. Palo Alto, California	Electro-Optical Systems, Inc. Pasadena, California
o Autopilot and Attitude Refer- Subsystem	o Telecommunication Subsystem	o Electrical Power Subsystem
Mr. R. R. Mueller Program Manager	Mr. G. C. Moore Program Manager	Mr. C. I. Cummings Program Manager

FIGURE 3

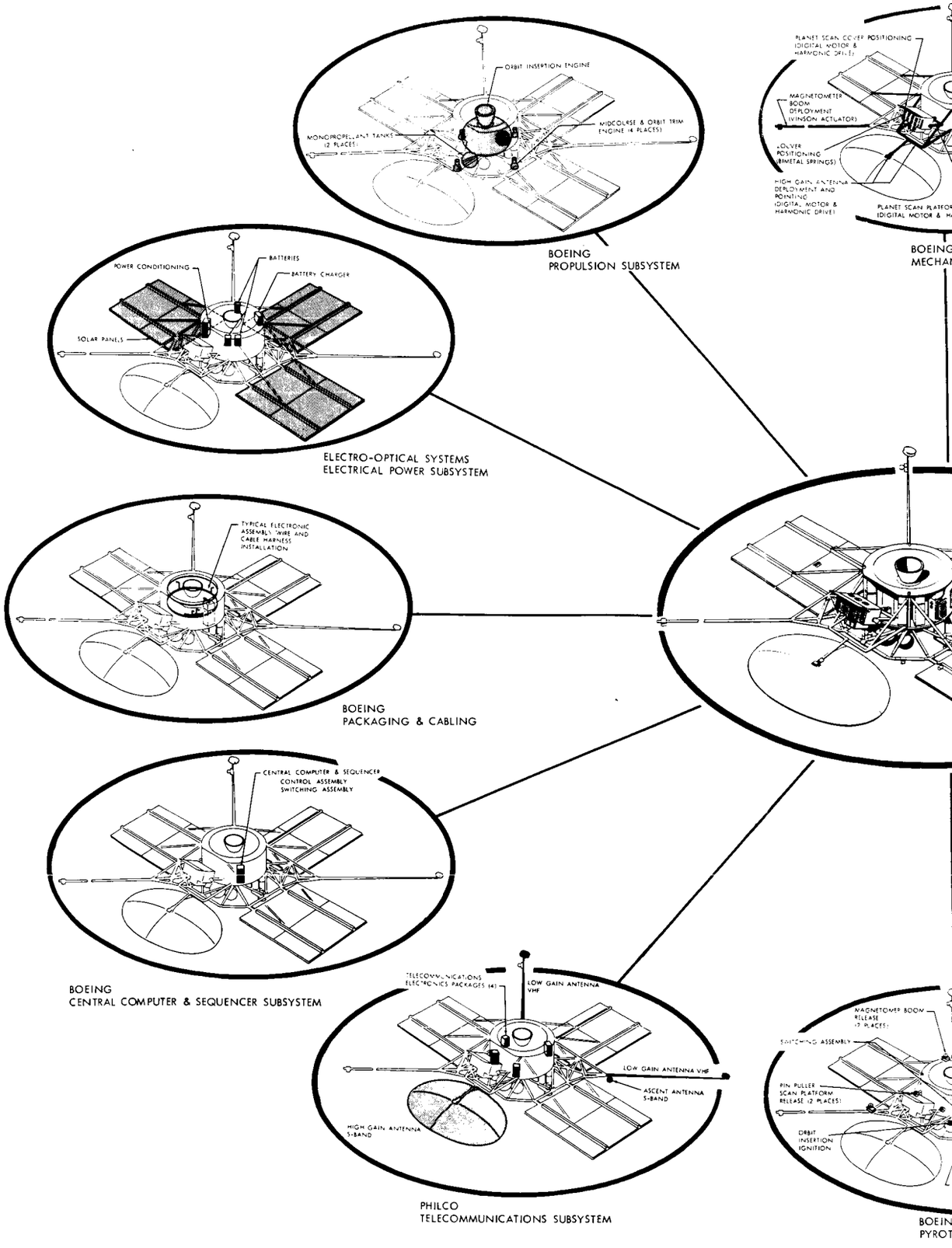
ORBIT INSERTION ENGINE
MONOPROPELLANT TANKS (2 PLACES)
MIDCOURSE & ORBIT TRIM ENGINE (4 PLACES)
BOEING
PROPULSION SUBSYSTEM
PLANET SCAN COVER POSITIONING (DIGITAL MOTOR & HARMONIC DRIVE)
MAGNETOMETER BOOM DEPLOYMENT (VINSON ACTUATOR)
LOUVER POSITIONING (BIMETAL SPRINGS)
HIGH GAIN ANTENNA DEPLOYMENT AND POINTING (DIGITAL MOTOR & HARMONIC DRIVE)
PLANET SCAN PLATFORM (DIGITAL MOTOR & H
BOEING
MECHAN
POWER CONDITIONING
BATTERIES
BATTERY CHARGER
SOLAR PANELS
ELECTRO-OPTICAL SYSTEMS
ELECTRICAL POWER SUBSYSTEM
TYPICAL ELECTRONIC ASSEMBLY WIRE AND CABLE HARNESS INSTALLATION
BOEING
PACKAGING & CABLING
CENTRAL COMPUTER & SEQUENCER
CONTROL ASSEMBLY
SWITCHING ASSEMBLY
BOEING
CENTRAL COMPUTER & SEQUENCER SUBSYSTEM
TELECOMMUNICATIONS ELECTRONICS PACKAGES (4)
LOW GAIN ANTENNA VHF
LOW GAIN ANTENNA VHF
ASCENT ANTENNA S-BAND
HIGH GAIN ANTENNA S-BAND
PHILCO
TELECOMMUNICATIONS SUBSYSTEM
MAGNETOMER BOOM RELEASE (2 PLACES)
SWITCHING ASSEMBLY
PIN PULLER SCAN PLATFORM RELEASE (2 PLACES)
ORBIT INSERTION IGNITION
BOEIN
PYROT

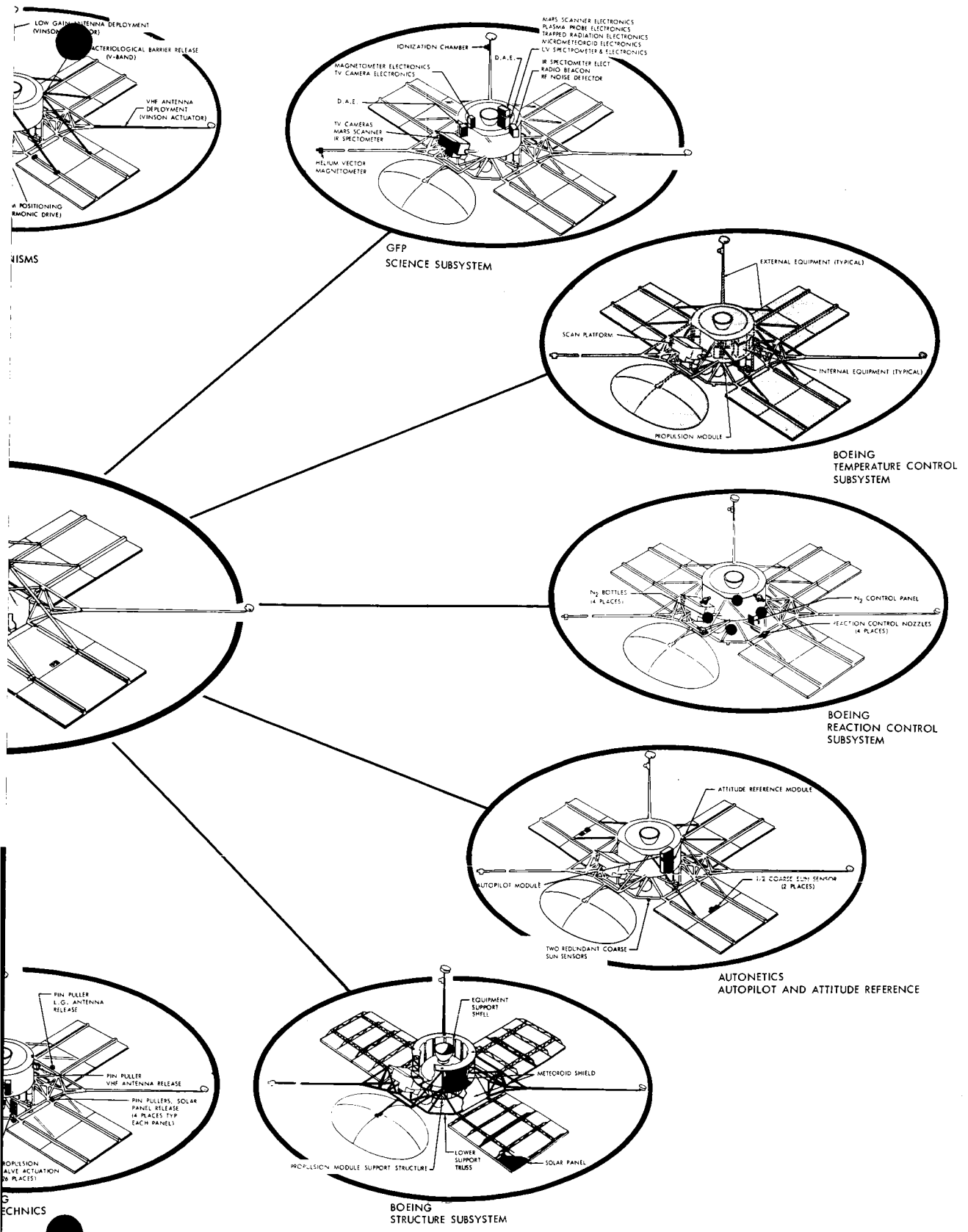

Figure 4: Voyager Flight Spacecraft Subsystem Integration

This document, D2-82709-3, contains the definition of the Operational Support Equipment (OSE) necessary to support the Voyager Mission. The Operational Support Equipment is defined in terms of the following categories:

1) Mission Dependent Equipment (MDE)
2) Launch Complex Equipment (LCE)
3) System Test Complex (STC)
4) Assembly, Handling and Shipping Equipment (AHSE)
5) Simulators
6) Special System Level Test Equipment (which includes magnetic mapping and trend data analysis software)
7) Subsystem Test Equipment (SSTE)

The overall OSE design objectives, constraints and concepts that cover these categories, are included as the more specific concepts and constraints for the individual OSE categories. This document is organized to present the objectives, constraints and concepts first in Section 1.0 and 2.0. The system level OSE then follows in Section 3.0, and the subsystem test equipment descriptions appear in Section 4.0.

Some of the more important OSE design features and guidelines chosen to control the entire OSE design effort are excerpted and follow here for convenience. They are:

Team Concept - In processing the spacecraft from assembly through testing and mission completion, a team of responsible engineers and

technicians will follow a particular set of mission hardware from initial testing through data retrieval. The intimate knowledge of the hardware thus gained will significantly improve the effectiveness of the Voyager system.

Hardware Commonality - The OSE is designed to allow the use of common instrumentation and components throughout the various levels of mission hardware support. For example, the same stimuli generator and response recorder would be used at the subsystem level test equipment, at the subcontractor and in the system test complex equipment and launch control equipment.

Automation - The OSE at all test levels is designed for automatic test sequencing with provision for manual override. This feature provides the means for achieving a high degree of test repeatability and at the same time maintains the ability to do single-step sequencing for mission and OSE hardware trouble-shooting and fault isolation down to the replaceable spares level.

Maintainability and Reliability - The previous three items along with a designed-in self-check capability and critical path redundancy combine to provide a very high degree of reliability and maintainability. Both of these items, of course, provide the necessary high probability of launch readiness.

Transportability - In support of the team concept and high reliability the OSE, particularly that in the system test complex, is transportable as an entity with a minimum number of simple interfaces. Truck, van, or air transportation is possible and setup and recalibration time is minimized.

Safety - The OSE is designed to present minimum hazard to either the mission hardware or operating personnel. Circuit design will incorporate mode of failure analysis and circuit adjustment to eliminate loads or hazards to the mission equipment when the OSE is in normal or malfunctioned condition.

These items form the backbone of the OSE design philosophy and implementation of this philosophy will result in operational support equipment that is effective, efficient, and available.

The major technical problems identified in the preliminary design of the Operational Support Equipment are:

1) The degree to which subsystem test equipment can be integrated into the system level test equipment such as STC and LCE.
2) The accomplishment of STC while the test set is connected to the spacecraft and without interruption of the test in progress.
3) The reduction and control of bacterial load of the spacecraft through assembly, test and launch.
4) The cooling of the planetary vehicle during launch checkout and countdown.

In conclusion, while design of the OSE has identified the above problems, it has also resulted in well-defined design concept that is both effective and efficient. If development of the Voyager mission spacecraft proceeds as scheduled, there is no doubt that the problems identified will be solved in a fashion and in time to support the overall mission with no undue difficulties.

CONTENTS

1.0 OSE OBJECTIVES AND DESIGN CRITERIA

1.1 Spacecraft System OSE Objectives and Criteria

1.0 OSE OBJECTIVES AND DESIGN CRITERIA

This section of Volume C records the objectives and design criteria that apply to the Voyager 1971 mission spacecraft operational support equipment (OSE). To relate the objectives and OSE, major items of equipment are located as shown in Table 1-1 and defined in the following paragraphs.

Table 1-1: VOYAGER OSE LOCATION

LOCATION	EQUIPMENT					
	MDE	LCE	STC	SSTE	SPECIAL SYSTEM-LEVEL OSE	AHSE
ETR						
Launch Complex	X	X				X
Explosive-Safe Facility	X	X		X(LCE)	X	X
System Assembly Facility	X		X		X	X
SEATTLE		▷X				
Environmental Test	X		X	X		X
Final Assembly	X		X			X
Subsystem Tests				X		
Subcontractor				X		

▷X OSE COMPATIBILITY TEST

Mission Dependent Equipment (MDE)-- MDE is that part of the Deep Space Network (DSN) unique to the Voyager mission and consists of both hardware and software. The MDE at the Deep Space Instrumentation Facility (DSIF) and Space Flight Operations Facility (SFOF) forms a portion of the equipment required to perform the following functions:

1) Telemetry data handling and processing;
2) Command processing;
3) On-site telemetry station testing.

Launch Complex Equipment (LCE)--LCE includes the OSE used in the launch complex area (e.g., blockhouse and launch pad), the explosive-safe area (ESA), and in support of operations at the Air Force Eastern Test Range (AFETR) magnetic-mapping facility. The LCE does not, however, include assembly, handling, and shipping equipment (AHSE) or the subsystem test equipment (SSTE).

System Test Complex (STC)--The STC houses the equipment for testing the Planetary Vehicle, with or without the Spacecraft Science Payload, and Flight Capsule from initial assembly of the Spacecraft Bus through a complete test program. The STC includes all equipment, both electrical and mechanical, necessary to support subsystem and system testing, except standard tools and test equipment not integrated into the design of the complex.

Assembly, Handling, and Shipping Equipment (AHSE)--AHSE includes all lifting, holding, and positioning fixtures and other items for assembling the Flight Spacecraft, Flight Capsule, Planetary Vehicle, and the OSE; and for moving mission flight hardware. System-level AHSE includes equipment that serves more than one airborne subsystem or serves other system OSE.

Subsystem Test Equipment (SSTE)--SSTE includes all equipment required for assembling, handling, shipping, servicing, checkout, and testing of the spacecraft subsystems.

1.1 SPACECRAFT-SYSTEM OSE OBJECTIVES AND CRITERIA

The basic objectives of the spacecraft-system OSE are to:

1) Support the assembly, handling, shipping, test, and checkout of the Spacecraft Bus and its subassemblies;
2) Support the prelaunch checkout, launch, and mission operations of the Flight Spacecraft and the Planetary Vehicle.

The specific objectives of the MDE are given below.

1) Support mission operations in conjunction with the Deep Space Network (DSN) to achieve performance and reliability levels that cause no mission degradation. (This support includes the receiving and processing of information from, and the processing and transmitting of commands to, the Planetary Vehicle during the mission.)
2) Ensure that appropriate engineering and scientific data are collected and properly identified for future use.

The objectives of the LCE, STC, AHSE, and SSTE are to:

1) Support the delivery of the required number of launch-configuration Planetary Vehicles;
2) Provide the capability to check out two vehicles so that they can be launched within a 2-day period;
3) Detect and isolate faults or failures in the Planetary Vehicle systems and subsystems, and support performance of the required corrective action.

The spacecraft simulator is an electrical-electronic simulation of those portions of the Planetary Vehicle necessary for final checkout of the LCE and MDE at the earliest time. Functions simulated are those that interface with the LCE and MDE through the umbilical and RF links. The spacecraft simulator is also used to perform system-level compatibility checks of the spacecraft with the STC.

Special system-level OSE consists of system-level software (trend data equipment) for collecting, accumulating and storing, analyzing, and presenting Planetary-Vehicle-subsystem parameter variations to enable prediction of potential Planetary Vehicle system and subsystem performance degradation. It also includes the equipment for magnetically mapping the Flight Spacecraft and Planetary Vehicle in special facilities.

OSE does not include such items as component-development test equipment, subsystem-fabrication equipment, subsystem-development test fixtures, and plumbing-system test stands. Subsystem special tooling and facilities are not considered OSE. However, OSE will be used wherever practical during early fabrication and developmental testing to ensure compatibility of OSE with the spacecraft equipment.

The objective of the trend-data-program software, used with all the other OSE, is to provide additional quantitative time-related information necessary to ensure success of Planetary Vehicle operations.

CONTENTS

2.0 OSE DESIGN CHARACTERISTICS AND RESTRAINTS

2.1 OSE Sequential Flow Chart

2.2 OSE Design Parameters

2.3 System Level OSE Design Criteria

2.3.1 Mission Dependent Equipment (MDE)

2.3.2 Launch Complex Equipment

2.3.3 System Test Complex

2.3.4 Assembly, Handling, and Shipping Equipments (AHSE)

2.3.5 Subsystem Test Equipment

2.3.6 Spacecraft Simulator

2.3.7 Trend Data Equipment (Software)

2.3.8 Magnetic Mapping Equipment

2.0 OSE DESIGN CHARACTERISTICS AND RESTRAINTS

Accomplishment of the objectives stated in Section 1.0 of this document depends on providing the four specified categories of OSE, which, when fully defined and implemented, support the unique requirements of the Voyager 1971 mission.

For OSE support, the Voyager program was divided into three levels of assembly: system, subsystem, and the replaceable spares; in the subsystem level, components are grouped into testable entities requiring separate OSE support.

To identify, define, and design the OSE, a comprehensive analysis was performed of all test and mission operations including prelaunch, launch, and inflight activities. As an initial step, a sequential flow diagram was drawn and the program constraints and requirements were then identified. Concepts and characteristics for the OSE were established and design restraints defined. This analysis provided the basis for the OSE design presented in this document.

2.1 OSE SEQUENTIAL FLOW CHART

A sequential flow chart was prepared to clarify and aid in identifying OSE functions. This chart (Figure 2-1) shows the flow sequence of test and flight spacecraft hardware through test and mission operations involving OSE. Key test and mission functions in this sequence were further examined through the use of matrix charts to identify the items to accomplish these functions. These matrices are shown in Figures 2-2 through 2-6. The list of OSE identified by use of these matrices is shown in Section 3.7.

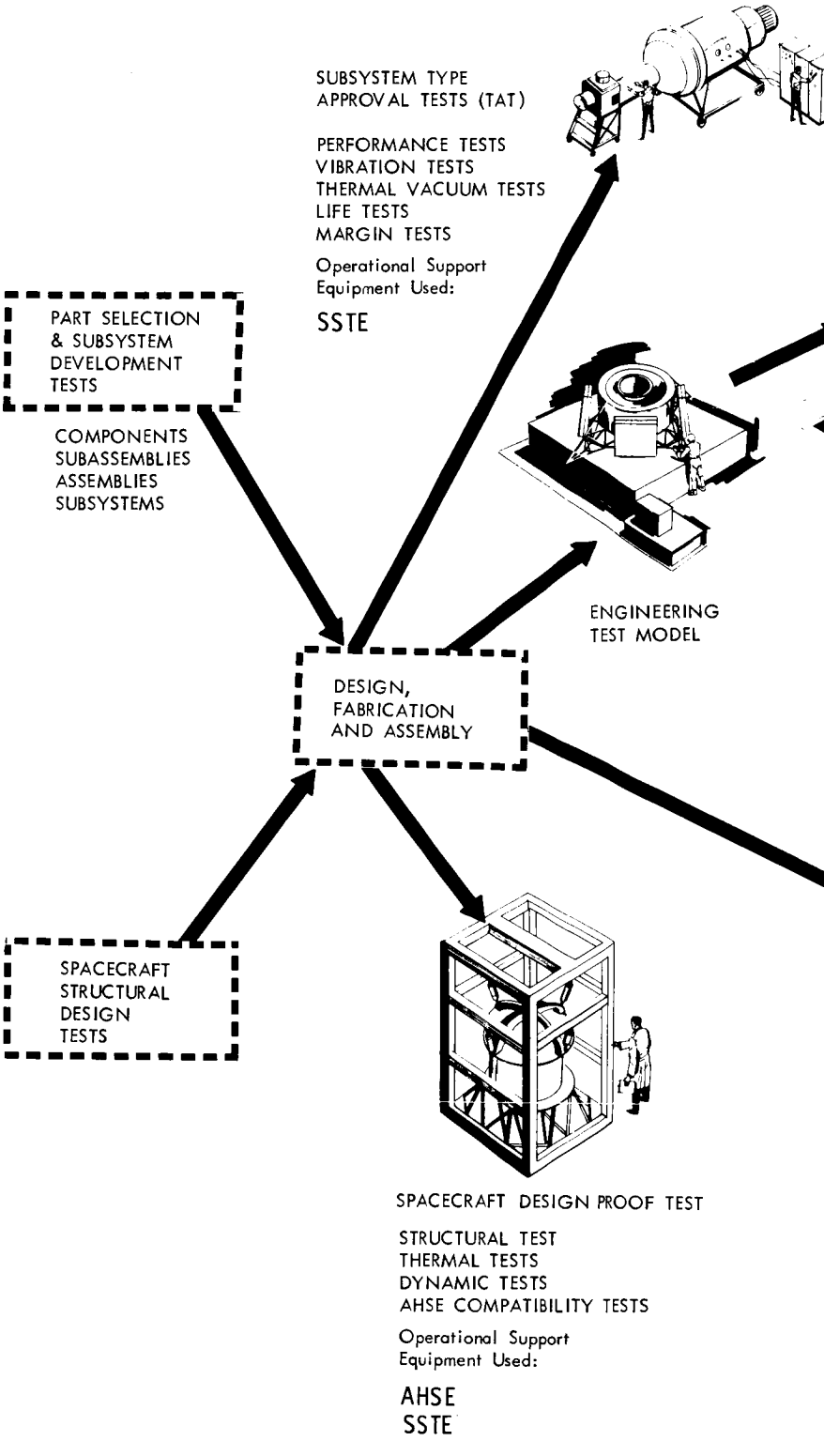
SUBSYSTEM TYPE
APPROVAL TESTS (TAT)
PERFORMANCE TESTS
VIBRATION TESTS
THERMAL VACUUM TESTS
LIFE TESTS
MARGIN TESTS
Operational Support
Equipment Used:
SSTE
PART SELECTION
& SUBSYSTEM
DEVELOPMENT
TESTS
COMPONENTS
SUBASSEMBLIES
ASSEMBLIES
SUBSYSTEMS
ENGINEERING
TEST MODEL
DESIGN,
FABRICATION
AND ASSEMBLY
SPACECRAFT
STRUCTURAL
DESIGN
TESTS
SPACECRAFT DESIGN PROOF TEST
STRUCTURAL TEST
THERMAL TESTS
DYNAMIC TESTS
AHSE COMPATIBILITY TESTS
Operational Support
Equipment Used:
AHSE
SSTE

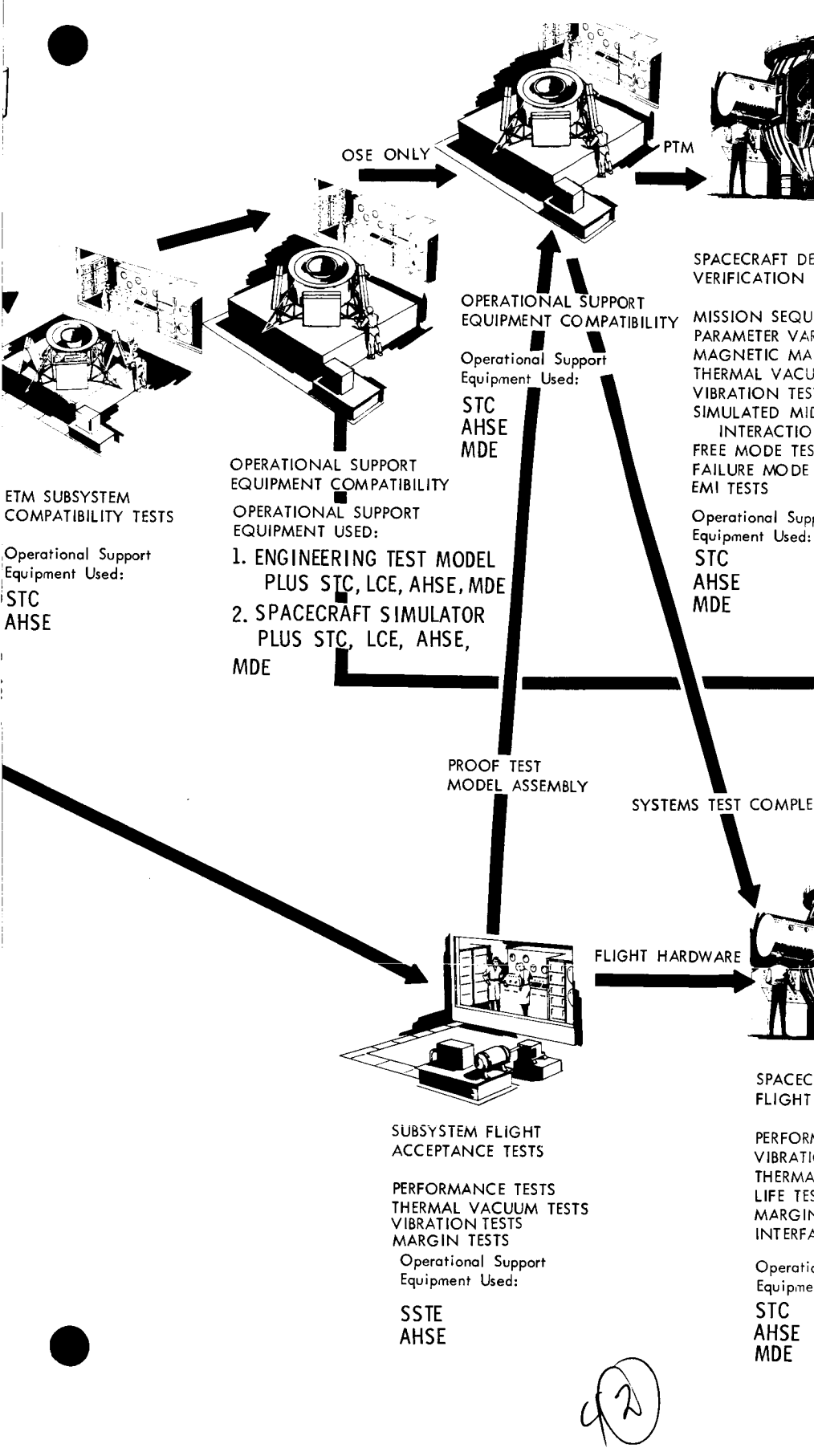
OSE ONLY
PTM
SPACECRAFT DE
VERIFICATION
MISSION SEQU
PARAMETER VAR
MAGNETIC MA
THERMAL VACU
VIBRATION TES
SIMULATED MID
INTERACTIO
FREE MODE TES
FAILURE MODE
EMI TESTS
Operational Supp
Equipment Used:
STC
AHSE
MDE
OPERATIONAL SUPPORT
EQUIPMENT COMPATIBILITY
Operational Support
Equipment Used:
STC
AHSE
MDE
OPERATIONAL SUPPORT
EQUIPMENT COMPATIBILITY
OPERATIONAL SUPPORT
EQUIPMENT USED:
1. ENGINEERING TEST MODEL
PLUS STC, LCE, AHSE, MDE
2. SPACECRAFT SIMULATOR
PLUS STC, LCE, AHSE,
MDE
ETM SUBSYSTEM
COMPATIBILITY TESTS
Operational Support
Equipment Used:
STC
AHSE
PROOF TEST
MODEL ASSEMBLY
SYSTEMS TEST COMPLE
FLIGHT HARDWARE
SPACEC
FLIGHT
PERFORM
VIBRATI
THERMA
LIFE TES
MARGIN
INTERFA
Operatio
Equipme
STC
AHSE
MDE
SUBSYSTEM FLIGHT
ACCEPTANCE TESTS
PERFORMANCE TESTS
THERMAL VACUUM TESTS
VIBRATION TESTS
MARGIN TESTS
Operational Support
Equipment Used:
SSTE
AHSE

42

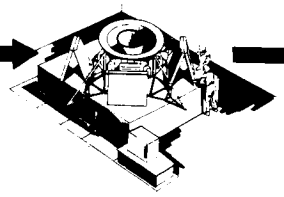

PTM

SIGN
ESTS

NCING
IATION TESTS
PING TESTS
JM TESTS
S
COURSE & RETRO
N TESTS
TS
TESTS

ort

GOLDSTONE COMPATIBILITY TESTS
(PTM WITH CAPSULE SIMULATOR)

Operational Support
Equipment Used:

STC
AHSE
MDE

SEATTLE

SEATTLE AREA FACILITIES

PLANETARY VEHICLE SIMULATOR

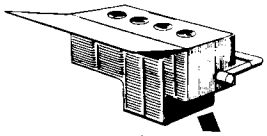

K

SCIENCE PACKAGE

DEMATE PROTOTYPE CAPSULE SHIP TO ETR

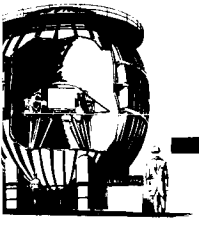

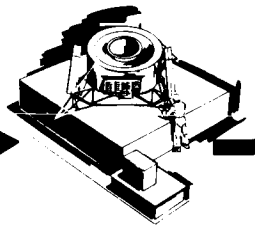

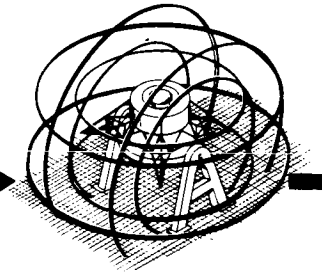

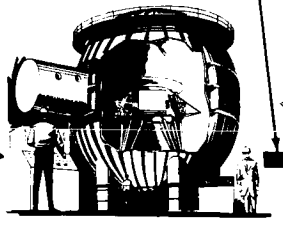

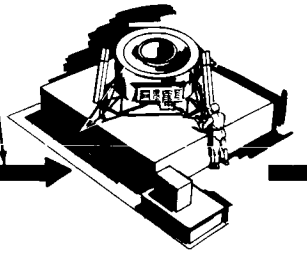

RAFT ASSEMBLY &
ACCEPTANCE TESTS

MANCE TESTS
ON TESTS
. VACUUM TESTS
TS
I TESTS
CE & SEQUENCING TESTS

nal Support
nt Used:

SPACECRAFT SCIENCE
PACKAGE INSTALLATION
FUNCTIONAL TEST

Operational Support
Equipment Used

STC
AHSE
MDE

FLIGHT SPACECRAFT
MAGNETIC MAPPING

Operational Support
Equipment Used:

MDE
AHSE
MAGNETIC MAPPING

SPACECRAFT TESTS WITH
SCIENCE PACKAGE &
CAPSULE

AMBIENT FUNCTIONAL TESTS
LIMITED ENVIRONMENTAL TESTS

STC
AHSE
MDE

SPACECRAFT - SCIENCE
PACKAGE
FUNCTIONAL TESTS

Operational Support
Equipment Used:

STC
AHSE
MDE

4 3

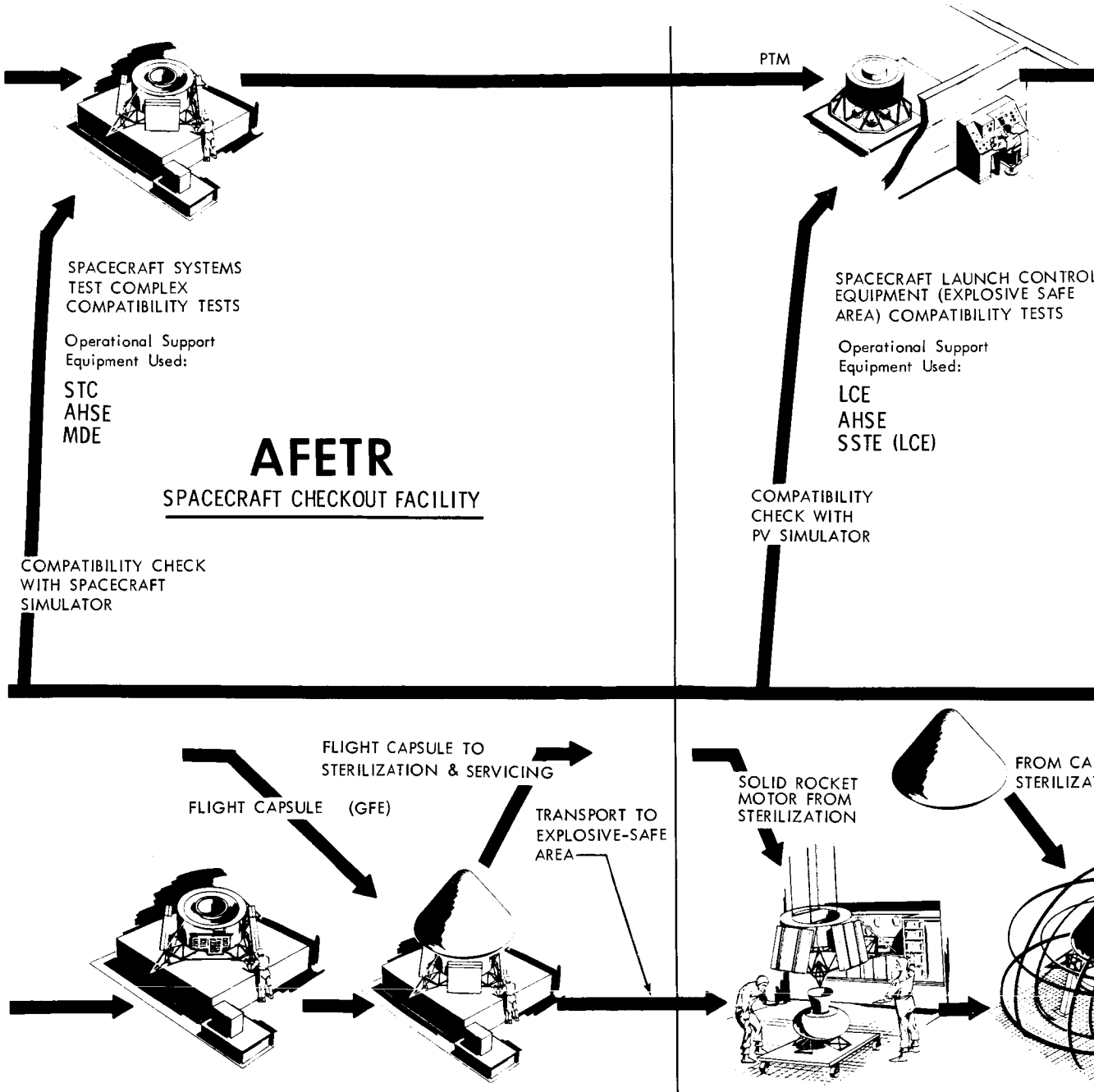
PTM
SPACECRAFT SYSTEMS
TEST COMPLEX
COMPATIBILITY TESTS
Operational Support
Equipment Used:
STC
AHSE
MDE
AFETR
SPACECRAFT CHECKOUT FACILITY
COMPATIBILITY CHECK
WITH SPACECRAFT
SIMULATOR
SPACECRAFT LAUNCH CONTROL
EQUIPMENT (EXPLOSIVE SAFE
AREA) COMPATIBILITY TESTS
Operational Support
Equipment Used:
LCE
AHSE
SSTE (LCE)
COMPATIBILITY
CHECK WITH
PV SIMULATOR
FLIGHT CAPSULE TO
STERILIZATION & SERVICING
FLIGHT CAPSULE (GFE)
TRANSPORT TO
EXPLOSIVE-SAFE
AREA
SOLID ROCKET
MOTOR FROM
STERILIZATION
FROM CA
STERILIZA
SPACECRAFT — SCIENCE
PACKAGE
FUNCTIONAL TESTS
Operational Support
Equipment Used:
STC
AHSE
MDE
SPACECRAFT - SCIENCE
PACKAGE - CAPSULE
FUNCTIONAL TESTS
INTEGRATION TESTS
CALIBRATION TESTS
RADIO FREQUENCY COMPATIBILITY
Operational Support
Equipment Used:
STC
AHSE
MDE
INSTALL LIVE MOTOR
REMOVE DUMMY & REPLACE
WITH LIVE MOTOR & CHECKOUT
Operational Support
Equipment Used:
AHSE
SSTE (LCE)
PLANET
MAGNE
(CAPSUL
SPACEC
MAGNE
Operatio
Equipme
LCE-TR
AHSE
MAGNE
EQU
MDE

5 (1)

AFETR

EXPLOSIVE SAFE AREA

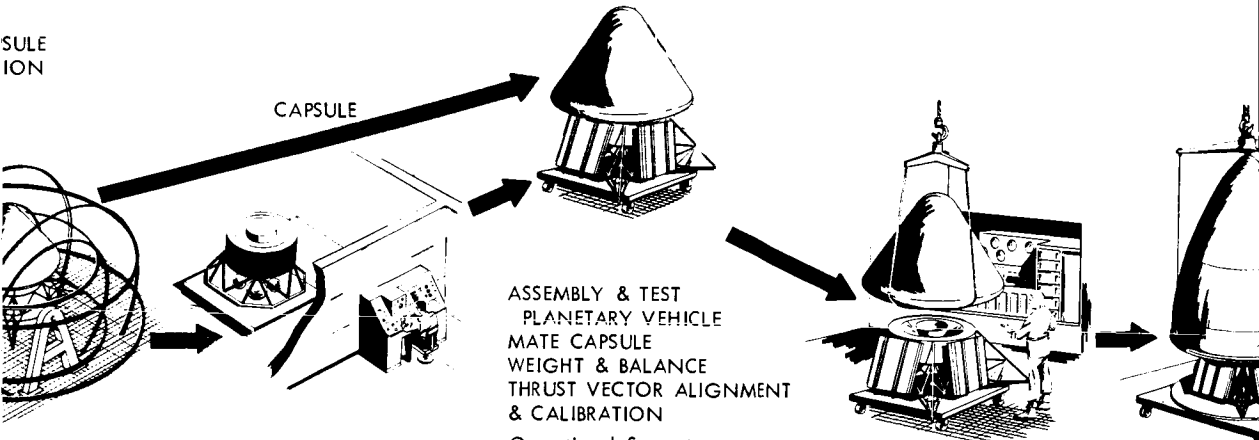

ASSEMBLY & TEST
PLANETARY VEHICLE
MATE CAPSULE
WEIGHT & BALANCE
THRUST VECTOR ALIGNMENT
& CALIBRATION

Operational Support
Equipment Used:

LCE
AHSE
MDE

RY VEHICLE
IC MAPPING
MATED TO
AFT)
IC MAPPING
al Support
Used:

ANSPORTABLE

IC MAPPING
PMENT

SERVICE AND INSTALL
PYROTECHNICS

LEAK TESTS
SERVICE WITH EXPENDABLES
PYROTECHNIC INSTALLATION & CHECKOUT
FLIGHT SPACECRAFT WEIGHT & BALANCE
THRUST VECTOR ALIGNMENT & CALIBRATION

Operational Support
Equipment Used:

AHSE (LCE)

ASSEMBLY & TEST PLANETARY
VEHICLE MATE CAPSULE, WEIGHT
& BALANCE, THRUST VECTOR
ALIGNMENT & CALIBRATION

Operational Support
Equipment Used:

LCE-TRANSPORTABLE
MDE
AHSE

INSTALL N
AND PERFO
TESTING
INTERFACE
PURGE & P
FAIRING

Operational
Equipment U

LCE - TRA
AHSE
MDE

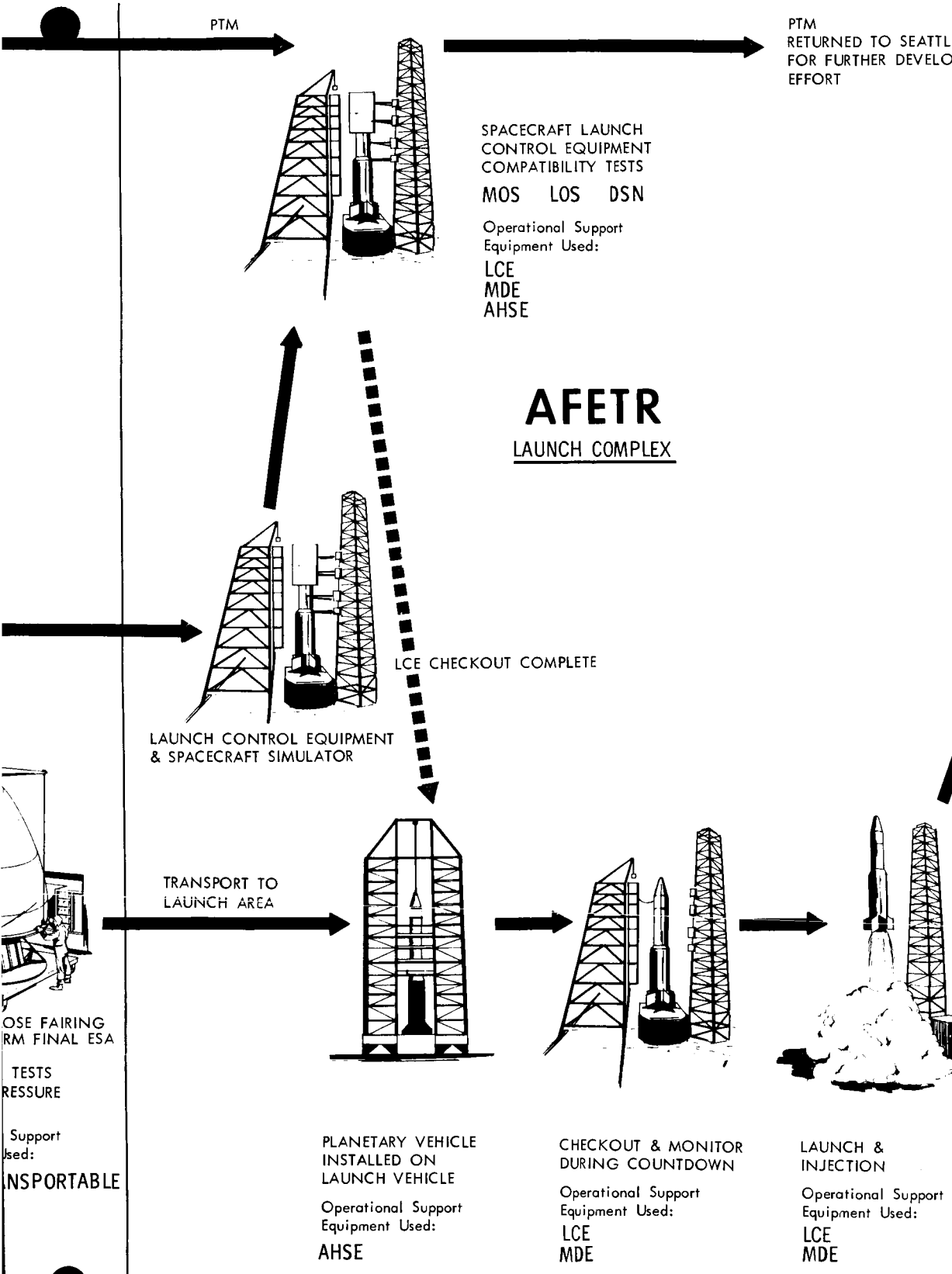
PTM
PTM
RETURNED TO SEATTL
FOR FURTHER DEVELO
EFFORT
SPACECRAFT LAUNCH
CONTROL EQUIPMENT
COMPATIBILITY TESTS
MOS LOS DSN
Operational Support
Equipment Used:
LCE
MDE
AHSE
AFETR
LAUNCH COMPLEX
LCE CHECKOUT COMPLETE
LAUNCH CONTROL EQUIPMENT
& SPACECRAFT SIMULATOR
TRANSPORT TO
LAUNCH AREA
OSE FAIRING
RM FINAL ESA
TESTS
RESSURE
Support
Used:
NSPORTABLE
PLANETARY VEHICLE
INSTALLED ON
LAUNCH VEHICLE
Operational Support
Equipment Used:
AHSE
CHECKOUT & MONITOR
DURING COUNTDOWN
Operational Support
Equipment Used:
LCE
MDE
LAUNCH &
INJECTION
Operational Support
Equipment Used:
LCE
MDE

5 3

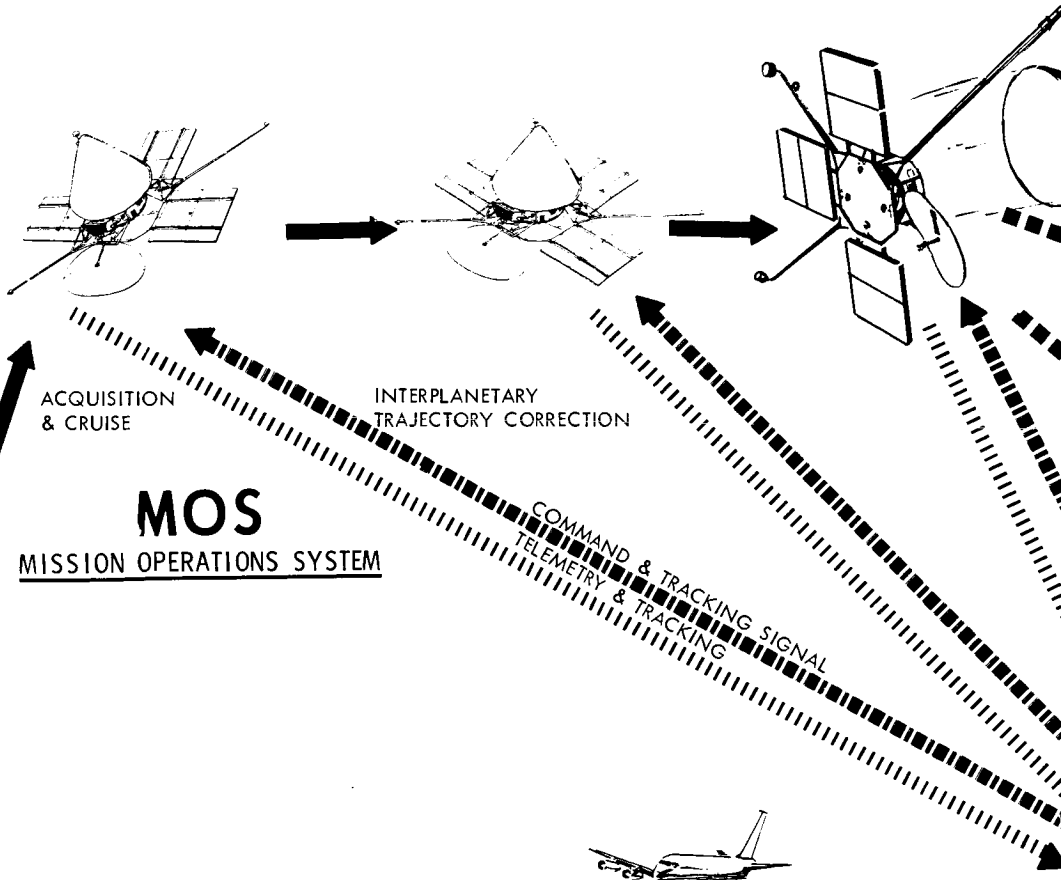

MOS

MISSION OPERATIONS SYSTEM

PREDETECTION RECORDING TAPES

TELEMETRY DATA, TRACKING INFORMATION

COMMANDS

TELETYPE

HIGH-SPEED DATA LINK (HSDL)

SFOF

MISSION CONTROL
FLIGHT ANALYSIS
ORIGINATE COMMANDS
REDUCTION OF PREDETECTION
RECORDING
TAPE SCIENCE INFORMATION
DATA DISPLAY

Operational Support Equipment Used:

TELEMETRY PROCESSING EQUIPMENT
PDR TAPE DEMODULATOR
COMMAND PROCESSING EQUIPMENT
COMPUTER INTERFACE EQUIPMENT
ALARM DISPLAY EQUIPMENT
COMPUTER PROGRAMS

54

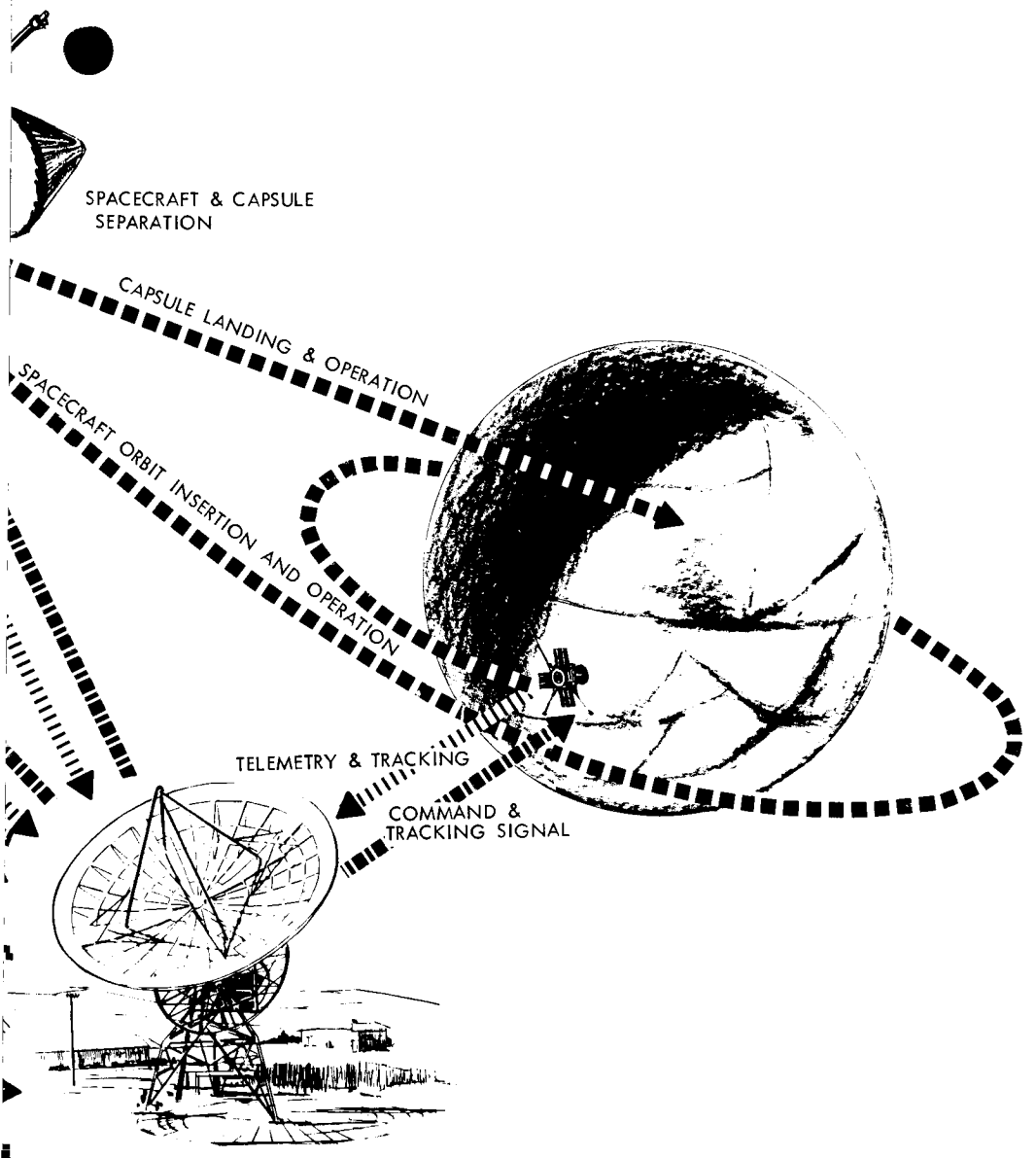

)SIF

REDETECTION RECORDING
UBCARRIER DEMODULATION
NGINEERING DATA REDUCTION & DISPLAY
)ATA BUFFER STORAGE
DITING, FORMATTING FOR "X" MISSION
OMMAND VERIFICATION & TRANSMISSION
MERGENCY DECISIONS & COMMANDS
)N-SITE TELEMETRY EQUIPMENT TESTING

)perational Support 'quipment Used:
TELEMETRY PROCESSING EQUIPMENT
COMMAND PROCESSING EQUIPMENT
PREDETECTION TAPE RECORDER
COMPUTER INTERFACE EQUIPMENT
COMPUTER PROGRAMS

Figure 2-1: Operational Support Equipment Usage Concept

FUNCTION		1 INTER- & INTRA-SUBSYSTEM INTEGRATION TESTS	2 SYSTEM REFERENCE TEST	3 PARAMETER VARIATION TESTS	4 ELECTRO-INTEFERENCE TESTS	5 NOSE FAIRING, LAUNCH VEHICLE, & LCE INTER-FACE SIM'L'T'N	6 VIBRATION TEST
OBJECTIVE		VERIFY PERFORMANCE OF INDIVIDUAL SUBSYSTEMS AND ESTABLISH THEIR INTEGRATION INTO AN OPERATING SYSTEM.	RECORD DATA FOR ANALYZING PERFORMANCE TREND OF COMPONENTS (REPLACEABLE MODULES)	DETERMINE THE EFFECTS ON SPACECRAFT BEHAVIOR OF CONTROLLED VARIATIONS IN SELECTED SYSTEM PARAMETERS	DETERMINE THE RF SUSCEPTABILITY OF SPACECRAFT AND OSE WHEN SUBJECTED TO AN RF ENVIRONMENT SIMILAR TO THAT EXPECTED AT ETR. DETERMINE THE CONTRIBUTION FROM S/C	ESTABLISH COMPATIBILITY OF S/C WITH ITS MECHANICAL AND ELECTRICAL INTERFACES	VERIFY PERFORMANCE OF COMPONENTS AND ESTABLISH FUNCTIONAL INTEGRITY WHILE SUBJECTED TO BOOST ENVIRONMENT AND PROPULSION SYSTEM OPERATION ENVIRONMENT
PHYSICAL CONFIGURATION		COMPLETE S/C BUS. SOLAR PANELS NOT INSTALLED; POWER CHARACTERISTICS SIMULATED BY OSE POWER SUPPLY. S/C SET UP IN TEST FIXTURE & SUPPORTED BY STC.	SAME CONFIG. OSE DISCONNECTED EXCEPT FOR ELECTRICAL POWER SOURCE AND ANTENNA HOODS FOR RF TRANSMISSION OF COMMANDS TO CC&S, & DATA RECEIVAL.	COMPLETE S/C BUS POWERED BY OSE. SET UP IN TEST COMPLEX WITH STC.	COMPLETE S/C BUS POWERED BY OSE, SET UP IN TEST COMPLEX WITH STC. PROTOTYPE SCIENCE PACKAGES REQUIRED.	COMPLETE S/C LESS SOLAR ARRAY. MECHANICAL SIMULATION OF CAPSULE, ADAPTER, SHROUD, AVAILABLE.	COMPLETE S/C WITH DUMMY SOLAR ARRAY, DUMMY CAPSULE, ADAPTER & SHROUD. MINIMUM CONNECTION NECESSARY TO SUPPLY POWER TO S/C. RF LINK FOR DATA MONITOR IN
FACILITIES		CLEAN ROOM, AMBIENT ENVIRONMENT. TEMP. & HUMIDITY CONTROLLED. STC INSTALLED AS PLANNED FOR FAT.	A. SAME AS 1	A. SAME AS 1	ELECTRO-INTERFERENCE TEST FAC A. SAME AS 1		VIBRATION TEST FACILITIES
SUBSYSTEM STATUS	RADIO	POWERED TEST	ON	ON	ON	ON	OFF/ON
	TELEMETRY		ON	ON	ON	ON	OFF/ON
	DATA STORAGE		ON	ON	ON	ON	OFF/ON
	ANTENNA		ON	ON	ON	OFF/ON	OFF/ON
	ATTITUDE REFERENCE		ON	ON	ON	OFF/ON	OFF/ON
	AUTOPILOT		ON	ON	ON	OFF/ON	OFF/ON
	REACTION CONTROL	INACTIVE EXCEPT FOR CONTROL CIRCUITS.	ON	ON	ON	OFF/ON	OFF/ON
	CENTRAL COMPUTER & SEQUENCE	POWERED TEST (CHECKED OUT 2ND)	ON	ON	ON	ON	OFF/ON
	ELECTRICAL POWER	CHECKED OUT FIRST EXTERNAL POWER SOURCE.	ON (EXTERNAL POWER)	ON (EXTERNAL POWER)	ON (EXTERNAL POWER)	ON (EXTERNAL POWER)	OFF/ON (EXTERNAL POWER)
	MID-COURSE PROPULSION	INACTIVE EXCEPT FOR CONTROL CIRCUITS	OFF	OFF	OFF	OFF	OFF
	OPBIT INSERTION PROPULSION	INACTIVE EXCEPT FOR CONTROL CIRCUITS (DUMMY MOTOR)	OFF	OFF	OFF	OFF	OFF
	STRUCTURE SUBSYSTEM	INSTALLED	INSTALLED	INSTALLED	INSTALLED	INSTALLED	INSTALLED
	MECHANICAL SUBSYSTEM	OPERATED	EXTENDED	FOLDED	FOLDED	OPERATED	EXTENDED
	TEMPERATURE CONTROL	INACTIVE, POWER CIRCUITS ON.	ON	ON	ON	OFF/ON	OFF/ON
	PYROTECHNIC	INCOMPLETE	OFF	OFF	OFF	OFF	OFF
	SCIENCE	ON	ON	OFF	ON	OFF	OFF
OPERATIONAL SUPPORT EQUIP	HANDLING, TRANSPORTATION & SHIPPING EQUIPMENT	A. S/C SUPPORT FIXTURE B. HANDLING SLINGS C. COMPONENT INST. DEVICE D. HANDLING DOLLY E. PROTECTIVE COVERS F. SHIPPING CONTAINERS G. TRANSPORTER	A. SAME AS 1A B, E	A. SAME AS 1A	A. SAME AS 1	A. SAME AS 1	A. SAME AS 1
	TEST EQUIPMENT	A. STC B. SSTE	A. STC	A. STC	A. R/F GENERATOR B. STC	A. STC	A. STC
	LAUNCH COMPLEX EQUIPMENT	NA	NA	NA	NA	NA	NA
	SIMULATORS	A. S/C SIMULATOR SET (PART OF STC) B. OTHERS AS REQ'D.	A. SAME AS 1A	A. SAME AS 1	A. SAME AS 1	A. SAME AS 1	A. SAME AS 1
	MAINTENANCE & SERVICE EQUIP	NA	NA	NA	A. INSTL KITS	A. INSTL KITS	A. SERVICE EQUIP. B. INSTL KITS
	MISSION DEPENDENT EQUIP.	A. YES	A. YES	A. YES	A. YES	A. YES	A. YES
SUBFUNCTIONS		1. STC CHECKOUT 2. INSTALL S/C ON TEST FIXTURE AND ALIGN 3. INSPECT 4. CONNECT OSE 5. OPERATE (WITHIN LIMITS OF AMBIENT) AND VERIFY PERFORMANCE OF EACH SUBSYSTEM 6. CALIBRATE TM 7. REDUCE EMI TO OPERABLE CONDITIONS	1. ESTABLISH SYSTEMS IN CRUISE MODE AT AMBIENT CONDITIONS 2. COMMAND CC&S TO SURVEY PERFORMANCE TREND DATA MONITORING POINTS 3. TRANSMIT AND RECORD DATA	1. HOLD REGULATED BOOSTER DC OUTPUT VOLTAGE TO NOMINAL VALUE 2. VARY POWER SYNCHRONIZER FREQUENCY TO A PREDETERMINED VALUE 3. EXERCISE S/C THROUGH ITS OPERATING MODES 4. REPEAT, HOLDING POWER SYNCHRONIZER FREQUENCY AND VARYING DC OUTPUT VOLTAGE 5. REPEAT WHILE VARYING BOTH	1. SYSTEMS ON AS INTENDED DURING LAUNCH 2. IRRIADIATE S/C WITH RF SIMUL ETR RF SOURCES 3. CHECK FOR INTERFERENCES 4. ISOLATE INTERFERENCES DURING SYSTEM TESTS IN COL. 1 & SPACE CHAMBER TESTS IN COL. 7, MEASURE B-B NOISE AND SPECTRAL COMPONENTS	1. INSTALL SIMULATORS 2. CHECK CLEARANCES 3. CHECK MOVEMENTS AND CLEARANCES 4. CHECK ELECTRICAL CONTINUITY & SENSE 5. SIMULATE COUNTDOWN	1. INSTALL S/C WITH SHROUD AND WITH DUMMY CAPSULE & ADAPTER 2. EQUALIZE SHAKER 3. CONNECT EXTERNAL MONITORING EQUIPMENT 4. VERIFY SYSTEM READINESS 5. PERFORM VIBRATION TEST 6. PERFORM SYSTEM REFERENCE TEST
EST. DURATION							

7	8	9	10	11	12	13
SPACE SIMULATION TEST	MAGNETIC MAPPING	FREE-MODE SYSTEMS TEST	PROPULSION SYSTEMS TEST	SEPARATION TEST	WEIGHT & DETERMINATION OF CG	PREPARE FOR SHIPMENT
VERIFY [illegible]TY OF TEMPERATU[illegible]L SUBSYSTEM TO MAINT[illegible] TEMPERATURE IN DESIGN LIMITS AND TO ESTABLISH FUNCTIONAL INTEGRITY OF S/C WHILE OPERATING IN A SIMULATED SPACE ENVIRONMENT	DETERMINE STABILITY OF S/C MAGNETIC FIELD. MAP MAGNETIC FIELD FOR 360° ROTATION ABOUT 3 ORTHOGONAL AXES. DETERMINE EFFECT OF S/C ELECTRICAL CURRENT FLOW ON MAGNETIC FIELD AS MEASURED AT MAGNETOMETER.	DEMONSTRATE CORRECT OPERATION OF THE SPACECRAFT ON SOLAR POWER. VERIFY INTEGRITY OF S/C IN ABSENCE OF OSE ELECTRICAL CONNECTIONS.	VERIFY THAT THE AUTOPILOT SYSTEM WILL BE CAPABLE OF MAINTAINING AND CONTROLLING THE S/C ATTITUDE DURING THE BURN PHASE OF THE TRAJECTORY CORRECTION MOTOR.	VERIFY PERFORMANCE OF OPERATING EQUIPMENT AND SURVIVAL OF NON-OPERATING EQUIPMENT DURING OPERATION OF PYROTECHNIC DEVICES FOR SEPARATION (BOOSTER & CAPSULE.	DETERMINE WEIGHT AND MOMENT ABOUT 3 AXES AND CALCULATE CENTER OF GRAVITY.	REMOVE EQUIPMENT FOR SEPARA SHIPMENT. PACKAGE SEPARATE MENT & SPACECRAFT FOR SHIPME
COMPLETE S/C BUS INCLUDING SOLAR PANELS. THE PANELS WILL BE MECHANICALLY SEPARATED FROM S/C, BUT ELECTRICALLY CONNECTED. SOLAR HEAT & POWER SOURCE SIMULATED. S/C ON ROTATABLE MOUNT FOR OPERATION OF REACTION CONTROL ABOUT ONE AXIS.	COMPLETE S/C BUS IN DEPLOYED CRUISE FLIGHT CONFIG. EXTERNAL POWER INPUT.	COMPLETE S/C BUS IN DEPLOYED CRUISE FLIGHT CONFIG. ON TEST FIXTURE. NO CONNECTIONS TO EXTERNAL EQUIP. RF COMMUNICATIONS. SUN SOURCE OF EXCITATION FOR PANELS.	COMPLETE S/C BUS. SERVICED WITH FLUIDS.	COMPLETE S/C WITH SIMULATED STRUCTURES FOR CAPSULE, SHROUD, ADAPTER, & BOOSTER INTERFACE.	COMPLETE S/C BUS SERVICED WITH SIMULATED FLUIDS.	
KENT LARGE SPACE CHAMBER. OSE RELATED TO SK VIA CC&S CONTROL.	MAGNETIC FIELD OF LESS THAN 100 GAMMA		PROPULSION TEST STAND SIMULATED ALTITUDE FACILITY	TOWER & CAPTURE NETS. APPROVED SAFE AREA.		
ON	OFF/ON	ON	ON	OFF/ON	OFF	OFF
ON	OFF/ON	ON	ON	OFF/ON	OFF	OFF
ON	OFF/ON	ON	OFF	OFF/ON	OFF	OFF
ON	OFF/ON	ON	ON	OFF/ON	OFF	OFF
ON	OFF/ON	ON	ON	OFF/ON	OFF	OFF
ON	OFF/ON	ON	ON	OFF/ON	OFF	OFF
ON	OFF/ON	ON	ON	OFF/ON	OFF SYSTEM SERVICED	OFF
ON	OFF/ON	ON	ON	OFF/ON	OFF	OFF
ON ON (EXTERNAL POWER)	OFF/ON (EXTERNAL POWER)	ON	ON (EXTERNAL POWER)	OFF/ON (EXTERNAL POWER)	OFF	OFF
OFF	OFF	OFF	ON	OFF	OFF SYSTEM SERVICED.	OFF
OFF	OFF	OFF	OFF	OFF	OFF	OFF
INSTALLED	INSTALLED	INSTALLED	INSTALLED	INSTALLED	INSTALLED	INSTALLED
ACTIVE	EXTENDED	EXTENDED	FOLDED	FOLDED/EXTENDED	EXTENDED	FOLDED
ACTIVE	OFF/ON	ON	OFF	OFF	OFF	OFF
OFF	OFF	OFF	OFF	ON	OFF	OFF
ON	OFF/ON	OFF	OFF	OFF	OFF	OFF
A. SAME AS 1	A. SAME AS 1	A. SAME AS 1	A. SAME AS 1	A. SAME AS 1 B. SHROUD FIXTURES C. TEST SET-UP	A. SAME AS 1	A. SAME AS 1
A. STC	A. STC	A. STC	A. STC B. SSTE	A. STC	A. WEIGHT/BAL. EQUIP. B. SSTE	A. SSTE
NA	MAGNETIC MAPPING EQUIPMENT	NA	NA	A. PYROTEC. SERV. EQUIP.	A. (WEIGHT/BAL., PROPEL., SERVICE, ETC. EQUIP IN ESA)	NONE
A. SAME AS 1	A. SAME AS 1	A. SAME AS 1	A. SAME AS 1	A. SAME AS 1 B. MASS SIMUL	A. AS REQD	A. SHIPPING SIMUL.
A. SAME AS 6	A. SAME AS 6	A. SAME AS 1	A. SAME AS 1	A. SAME AS 1	A. SAME AS 6	A. SAME AS 6
A. YES	NA	A. YES	NA	NA	NA	NA
1. INSTALL S/C IN SPACE CHAMBER ON ROTATABLE MOUNT 2. ALIGN SENSORS WITH SIMULATED SUN, CANOPUS SOURCES 3. CHECK SYSTEM READINESS BY COMMAND TO CC&S 4. REDUCE CHAMBER PRESSURE 5. APPLY THERMAL LOADS 6. PERFORM CONDENSED MISSION CYCLE 7. RETURN TO AMBIENT AND PERFORM SYS. REF. TEST	1. MOUNT S/C ON MAPPING CART 2. INSTALL IN MAGNETIC SHIELDED ROOM 3. SUBJECT S/C TO FLUX OF 25 GAUSS 4. IN NULL FIELD MEASURE S/C MAGNETIC FIELD 5. APPLY 25 GAUSS IN OPPOSING DIRECTION 6. IN NULL FIELD MEASURE S/C MAGNETIC FIELD 7. OPERATE COMPLETE S/C THRU SIMUL. FLT. 8. RECORD MAGNETOMETER DATA AT DISCRETE INTERVALS 9. WITH ALL SYSTEMS DE-ENERGIZED ROTATE S/C ABOUT EACH OF 3 AXES AT MOMENTARY STATIONARY INTERVALS RECORD MAGNETOMETER DATA	1. TRANSPORT S/C TO SOLAR SOURCE 2. POSITION SO THAT ROLL AXIS POINTS TO SUN 3. VERIFICATION SYSTEM READINESS BY RF COMMAND TO CC&S 4. EXERCISE S/C IN FOLLOWING TEST MODES CRUISE MIDCOURSE MANEUVER CRUISE MODE BACKUP COMMANDS ENCOUNTER SEQUENCE PLAYBACK MODE	1. INSTALL S/C IN ALTITUDE TEST STAND 2. OPERATE MIDCOURSE CORRECTION PROP. SYS. AND EVALUATE DYNAMICS OF SYSTEM DURING START AND SHUTDOWN 3. OPERATE ORBIT INSERTION PROP. SYS. 4. EVALUATE ENVIRONMENT INDUCED ON OTHER S/C COMPONENTS.	1. MOUNT S/C IN HOLDING FIXTURE 2. MOUNT MASS SIMULATED SHROUD ADAPTER CAPSULE 3. INSTALL PYROTECHNICS 4. PERFORM SEPARATIONS IN FLIGHT SEQUENCE	1. X-Y PLANE CG FIXTURE LEVELED 2. PLACE S/C ON LOAD CELLS 3. RECORD WEIGHTS 4. ROTATE S/C 120 AND RECORD LOAD CELL DATA 5. REPEAT TWICE MORE 6. CALCULATE X-Y PLANE CG 7. REPEAT 1-6 WITH Z AXIS CG FIXTURES 8. CALCULATE TOTAL WEIGHT & CG 9. PURGE & CLEAN	1. REMOVE SOLAR PANELS, ANTENNAS, BATTERIES, AND ADAPTER 2. PACKAGE PANELS, ANTE AND ADAPTER 3. PREPARE SHIPPING FOR (TEST BATTERIES REMAIN IN TEST AREA)
250 HOURS						

14 GOLDSTONE COMPATIBILITY TESTS	15 ETR INTERFACE TESTS
VE[illegible]PATIBILITY OF VO[illegible]ECOMMUNICA-TIONS[illegible]EM WITH DSIF AND MDE	VERIFY COMPATIBILITY OF SPACECRAFT WITH DSIF, MOS, AND LAUNCH VEHICLE
ON	OFF/ON
ON	OFF/ON
ON	OFF/ON
ON	OFF/ON
OFF	OFF/ON
OFF	OFF/ON
OFF	OFF/ON
ON	OFF/ON
ON (EXTERNAL POWER)	OFF/ON (EXTERNAL POWER)
OFF	OFF
OFF	OFF
INSTALLED	INSTALLED
SOME NOT REQUIRED SOME EXTENDED	FOLDED
OFF	OFF
OFF	OFF
OFF	OFF
A. SAME AS 1	A. SAME AS 1
A. STC B. SSTE	A. STC
(TO BE DETERMINED)	SEE ESA FLOW
A. SAME AS 1	A. S/C SIMULATOR
A. SAME AS 6	A. SERVICE EQUIP.
A. YES	A. YES
1. TRANSPORT S/C TO GOLDSTONE 2. SET UP S/C AND INSTALL RF HOODS AND INTERTIE WITH DSIF ANTENNA INPUT 3. PERFORM SIMULATIONS OF FLIGHT MISSION COMMUNICATION MODES 4. EVALUATE PROGRAMS, PERSONNEL TRAINING AND PROCEDURES	1. TRANSPORT S/C TO ETR 2. SEQUENCE S/C THROUGH FACILITIES (SEE FAT FLOW)

Figure 2-2: Voyager Proof Test Model Flow

FUNCTION		1 MECHANICAL ASSEMBLY BASIC STRUCTURE	2 INSTALL & CHECKOUT MECHANISMS	3 INSTALL & CHECKOUT REACTION CONTROL SUBSYSTEM	4 INSTALL & CHECKOUT PROPULSION SYSTEM	5 INSTALL & CHECKOUT ELECTRONIC CHASSES AND HARNESSES
OBJECTIVE		PERFORM BASIC ASSEMBLY AND VERIFY CORRECT ASSEMBLY AND WORKMANSHIP. ESTAB ALIGNMENT ON TEST FIXTURE.	PERFORM INSTALLATION AND VERIFY MECHANICAL OPERATION OF EACH MECHANISM	PERFORM INSTALLATION AND ACHIEVE PROPER ALIGNMENT OF NOZZLE UNITS.	PERFORM INSTALLATION AND VERIFY PROPER INSTALLATION.	PERFORM INSTALLATION AND HOOKUP HARNESSES. CHECK-OUT CORRECT INSTALLATION & PERFORM ELECTRICAL ISOLATION, CONTINUITY, AND POWER CHECKS
PHYSICAL CONFIGURATION		BASIC ASS'Y AND STRUCTURAL ASS'YS BROUGHT TOGETHER FOR ASSEMBLY	BASIC S/C STRUCTURE WITH MECHANISMS FOR ANTENNAS, SOLAR PANELS, BOOMS, SCIENCE PLATFORMS & SEPARATION.	PREVIOUS CONFIGURATION WITH ADDITION OF TANKAGE, PLUMBING, VALVING & NOZZLES FOR REACTION CONTROL	ADD TANKAGE, VALVING, PLUMBING & MCPS MOTORS & OIPS MOTORS. SIMULATED FLUID MASSES FOR C/O OF STRUCTURAL INSTALLATION. DUMMY SOLID MOTOR	PREVIOUS CONFIGURATION WITH ADDITION OF CHASSES OF ELECTRICAL EQUIP: IRV, CC&S, TEST BATTERIES, DC/DC REG., CHARGER, INVERTERS, T/M RADIO, DATA STORAGE, TRANSPONDERS, AMPLIFIERS, TVC, AUTOPILOT ELECT. & ETC. DOES NOT INCLUDE SCIENCE PAYLOAD
FACILITIES		CLEANROOM ASSY AREA WITH HOIST IN HIGH BAY AREA	SAME AS 1	SAME AS 1	SAME AS 1	SAME AS 1
SUBSYSTEM STATUS	RADIO	NA	NA	NA	NA	OFF
	TELEMETRY	NA	NA	NA	NA	OFF
	DATA STORAGE	NA	NA	NA	NA	OFF
	ANTENNA	NA	NA	NA	NA	NA
	ATTITUDE REFERENCE	NA	NA	NA	NA	INCOMPLETE
	AUTOPILOT	NA	NA	NA	NA	OFF
	REACTION CONTROL	NA	NA	INSTALL; INACTIVE	TANKS FILLED SYSTEM STATIC	INACTIVE
	CENTRAL COMPUTER & SEQUENCE	NA	NA	NA	NA	OFF
	ELECTRICAL POWER	NA	NA	NA	NA	UNPOWERED
	MIDCOURSE PROPULSION	NA	NA	NA	INSTALL SYSTEM FILL SYSTEM SYSTEM STATIC	INACTIVE
	ORBIT INSERTION	NA	NA	NA	INSTALL SYSTEM WITH DUMMY MOTOR	INACTIVE
	STRUCTURE	INSTALLED	INSTALLED	INSTALLED	INSTALLED	INSTALLED
	MECHANICS	NA	WORKING	FOLDED	FOLDED	FOLDED
	TEMPERATURE CONTROL	NA	NA	NA	NA	NOT CONTROLLING
	PYROTECHNIC	NA	NA	NA	NA	INCOMPLETE
	SCIENCE	NA	NA	NA	NA	NA
OPERATIONAL SUPPORT EQUIPMENT	HANDLING, TRANSPORTATION, & SHIPPING EQUIPMENT	A. S/C SUPPORT FIXTURE B. HANDLING SLINGS C. COMPONENT INST. DEVICE D. HANDLING DOLLY E. PROTECTIVE COVERS F. SHIPPING CONTAINERS G. ACCESS PROVISIONS	A. SAME AS 1	A. SAME AS 1	A. SAME AS 1	A. SAME AS 1
	TEST EQUIPMENT	A. ALIGNMENT FIXTURE B. S/S ALIGNMENT DEVICES C. JIGS D. SSTE	A. SAME AS 1A, B & C B. DEPLOYMENT AIDS C. SSTE	A. SAME AS 1A, B & C B. SSTE	A. SAME AS 1 B. SSTE	A. SSTE
	LAUNCH-COMPLEX EQUIP	NA	NA	NA	NA	NA
	SIMULATORS	NA	A. PANELS, ANTENNAS, BOOMS, ETC.	NA	A. FLUID MASSES	NA
	MAINTENANCE & SERVICE EQUIP	A. INSTALLATION KITS B. SERVICE EQUIPMENT	A. SAME AS 1	A. SAME AS 1	A. SAME AS 1	A. SAME AS 1
	MISSION DEPENDENT EQUIP	NA	NA	NA	NA	NA
SUBFUNCTIONS			MANUALLY OPERATE OR DEPLOY EACH MECHANICAL SYSTEM. (USE DUMMY OR SIMULATED PANELS AND ANTENNAS). DEPLOY S/C TO MINIMIZE "g" LOADS FOR EACH MECHANISM.	WITH S/C SETUP IN ALIGNMENT FIXTURE, MAKE OPTICAL CHECK TO DETERMINE ERROR ANGLES ABOUT EACH PLANE OF OPERATION. FOUR SEPARATE TRANSVERSE PLANIZER POSITIONS ARE REQUIRED.	LOAD TANKS WITH SIMULATED PROPELLANT; PURGE AND CLEAN SYSTEM	Install basic electrical harnesses. Install chasses already built up with component equipments which have been acceptance tested. Add interconnecting harnesses. Check out wiring as installed & hook up.
EST DURATION (7 MO.) (400 TEST HOURS)						

6 INSTALL & ALIGN ANTENNAS	7 INSTALL & ALIGN SENSORS & HARNESSES	8 INTRA & INTER SUBSYSTEM TESTS	9 SYSTEM REFERENCE TEST	10 NOSE FAIRING, LAUNCH VEHICLE, & L C E INTERFACE SIMULATION	11 SPACECRAFT VIBRATION TEST	12 S
PERFORM INSTALLATION AND VERIFY CORRECT ALIGNMENT	PERFORM INSTALLATION. ALIGN SENSORS TO PROPER AXES, AND INSTALL HARNESSES. VERIFY ELECTRICAL INTEGRITY OF INSTALLATION	VERIFY PERFORMANCE OF INDIVIDUAL SUBSYSTEMS AND ESTABLISH THEIR INTEGRATION INTO AN OPERATING SYSTEM.	RECORD DATA FOR ANALYSING PERFORMANCE TREND OF COMPONENTS (REPLACEABLE MODULES).	ESTABLISH COMPATIBILITY OF S/C WITH ITS MECHANICAL AND ELECTRICAL INTERFACES	VERIFY PERFORMANCE OF COMPONENTS AND ESTABLISH FUNCTIONAL INTEGRITY WHILE SUBJECTED TO BOOST ENVIRONMENT AND PROPULSION SYSTEM OPERATION ENVIRONMENT.	VER CON S/C T LIM INTE IN A
ADD ANTENNAS. S/C ON ALIGNMENT FIXTURE	ADD SENSORS REQUIRED FOR ATTITUDE CONTROL	COMPLETE S/C BUS. SOLAR PANELS NOT INSTALLED; POWER CHARACTERISTICS SIMULATED BY OSE POWER SUPPLY. S/C SET UP IN TEST FIXTURE & SUPPORTED BY STC.	Same config. OSE disconnected except for elect. power source & antenna loads for RF transmission of commands to CC&S & data receiver.	Complete S/C less solar array. Mechanical simulators of capsule, adapters, shroud available. LCE signals simulated through umbilicals to S/C.	Complete S/C with dummy solar array, dummy capsule, adapter & shroud. Minimum connections necessary to supply power to S/C. R.F. link for data monitoring.	Com incl wit S/C elect and rotat reac
REQUIRES TEMP CONTROLLED AREA (± 5°F)	SAME AS 1	CLEAN ROOM, AMBIENT ENVIRONMENT TEMP. & HUMIDITY CONTROLLED STC INSTALLED	CLEAN ROOM, AMBIENT ENVIRONMENT TEMP. & HUMIDITY CONTROLLED STC INSTALLED	CLEAN ROOM, AMBIENT ENVIRONMENT TEMP. & HUMIDITY CONTROLLED STC INSTALLED	VIBRATION TEST FACILITIES	KE OS CO
OFF	OFF	POWERED TEST	ON	ON	OFF/ON	
OFF	OFF	POWERED TEST	ON	ON	OFF/ON	
OFF	OFF	POWERED TEST	ON	ON	OFF/ON	
OFF	OFF	POWERED TEST	ON	OFF/ON	OFF/ON	
INCOMPLETE	OFF	POWERED TEST	ON	OFF/ON	OFF/ON	
OFF	OFF	POWERED TEST	ON	OFF/ON	OFF/ON	
INACTIVE	INACTIVE	INACTIVE EXCEPT FOR CONTROL CIRCUITS	OFF	OFF/ON	OFF/ON	
OFF	OFF	POWERED TEST (CHECKED OUT 2ND)	ON	ON	OFF/ON	
UNPOWERED	UNPOWERED	CHECKED OUT FIRST: EXTERNAL POWER SOURCE	ON (EXTERNAL POWER)	ON (EXTERNAL POWER)	OFF/ON (EXTERNAL POWER)	
INACTIVE	INACTIVE	INACTIVE EXCEPT FOR CONTROL CIRCUITS	OFF	OFF	OFF	
INACTIVE	INACTIVE	INACTIVE EXCEPT FOR CONTROL CIRCUITS	OFF	OFF	OFF	
INSTALLED	INSTALLED	INSTALLED	INSTALLED	INSTALLED	INSTALLED	
FOLDED	FOLDED	OPERATED	EXTENDED	OPERATED	EXTENDED	
INACTIVE	INACTIVE	INACTIVE; POWER CIRCUITS ON	ON	OFF/ON	OFF/ON	
INCOMPLETE	INCOMPLETE	INCOMPLETE	OFF	OFF	OFF	
NA	NA	NA	SIMULATED	SIMULATED	SIMULATED	
L SAME AS 1	A SAME AS 1	A. TRANSPORTER B. SAME AS 1A, B & E	A. SAME AS 1A, B & E	A. SAME AS 1A, B & E	A. SAME AS 1 B. TRANSPORTER C. VIBRATION FIXTURES	A. B. C.
A. SAME AS 1A, B & C B. SSTE	A. SAME AS 1A, B & C B. SSTE	A. STC B. ALIGNMENT EQUIPMENT C. EI TEST EQUIPMENT	A. STC	A. STC	A. STC	A
NA	NA	NA	NA	NA	NA	
NA	NA	A. CAPSULE SIMULATOR B. S/ SIMULATOR	SAME AS 8	A. SIMULATORS FOR CAPSULE, S/P, L/V, ADAPTER, SHROUD, LCE	A. SAME AS 8	A.
A SAME AS 1	A SAME AS 1	NA	NA	NA	A. SAME AS 1	A.
NA	NA	NA	MDE IN STC	A. SAME AS 9	A. SAME AS 9	A.
SETUP ALIGNMENT FIXTURE. COLLIMATE PLANIZER AND ALIGNMENT SCOPE. ALIGN ANTENNA INDEX WITH PLANIZER AND ALIGN FOR PROPER POSITIONING.		1. STC CHECKOUT 2. INSTALL S/C ON TEST FIXTURE & ALIGN 3. INSPECT 4. CONNECT OSE 5. OPERATE (WITHIN LIMITS OF AMBIENT, LABORATORY ENVIRONMENT) AND VERIFY PERFORMANCE OF EACH SUBSYSTEM 6. CALIBRATE T/M 7. SYSTEM TESTS 8. REDUCE EMI TO OPERABLE CONDITIONS 9. INSTALL LIVE ORDNANCE AND PERFORM SHOCK TEST. PERFORM ALIGNMENT OF PLATFORMS.	1. ESTABBISH SYSTEMS IN CRUISE MODE AT AMBIENT CONDITIONS. 2. COMMAND CC&S TO SURVEY PERFORMANCE TREND DATA MONITORING POINTS. 3. TRANSMIT AND RECORD DATA.	1. INSTALL SIMULATORS 2. CHECK CLEARANCES 3. CHECK MOVEMENTS AND CLEARANCES 4. CHECK ELECTRICAL CONTINUITY AND SENSE 5. SIMULATE COUNTDOWN	1. INSTALL S/C WITH SHROUD AND WITH DUMMY CAPSULE & ADAPTER 2. EQUALIZE VIBRATOR 3. CONNECT EXTERNAL MONITORING EQUIPMENT. 4. VERIFY SYSTEM READINESS. 5. PERFORM VIBRATION TEST. 6. PERFORM SYSTEM REFERENCE TEST.	1. 2. 3. 4. 5. 6. 7.

SPA[illegible] IMU[illegible] ON TEST	13 MAGNETIC MAPPING	14 FREE MODE SYSTEM TEST	15 WEIGH AND DETERMINE CENTER OF GRAVITY	16 INSTALL S/C SCIENCE PAYLOAD	17 CALIBRATE & ALIGN SCIENCE PAYLOAD
r CAPABILITY OF TEMPERATURE OL SUBSYSTEM TO MAINTAIN MPERATURE IN DESIGN S & TO ESTABLISH FUNCTIONAL ITY OF S/C WHILE OPERATING IMULATED SPACE ENVIRONMT.	MAP MAGNETIC FIELD OF SPACECRAFT BUS ABOUT EACH 3 ORTHOGONAL AXES WITH EQUIPMENT POWERED AS REQUIRED FOR FLIGHT MISSION	DEMONSTRATE CORRECT OPERATION OF THE SPACECRAFT ON SOLAR POWER. VERIFY INTEGRITY OF S/C IN ABSENCE OF OSE ELECTRICAL CONNECTIONS	DETERMINE WEIGHT AND MOMENTS ABOUT 3 AXES AND CALCULATE CENTER OF GRAVITY	INSTALL AND VERIFY INSTALLATION OF SCIENCE INSTRUMENTS.	VERIFY FUNCTIONAL CAPABILITY OF SCIENCE INSTRUMENTS
de S/C bus less science payload, ing solar panels. The panels mechanically separated from ember size limitation), but cally connected. Solar heat ner source simulated. S/C on de mount for operation of n control about one axis.	Complete S/C bus in deployed cruise flight config. External power input.	Complete S/C bus in deployed cruise flight config. on test fixture. No connections to external equipment. RF commands required. Sun source of excitation for panels.	Complete S/C bus serviced with simulated fluids.	COMPLETE FLIGHT S/C	SAME AS 16
LARGE SPACE CHAMBER. RELATED TO S/C VIA CC&S ROL	MAGNETIC SHIELDED ROOM	SOLAR SIMULATORS-KENT	SAME AS 1	SAME AS 1	SAME AS 1
ON	OFF/ON	ON	OFF	OFF	OFF
ON	OFF/ON	ON	OFF	ON	ON
ON	OFF/ON	ON	OFF	OFF	OFF
ON	OFF/ON	ON	OFF	OFF	OFF
ON	OFF/ON	ON	OFF	OFF	OFF
ON	OFF/ON	ON	OFF	OFF	OFF
ON	OFF/ON	ON	OFF (SYSTEM SERVICED)	OFF	OFF
ON	OFF/ON	ON	OFF	ON	ON
ON + EXTERNAL POWER	OFF/ON (EXTERNAL POWER)	ON	OFF	ON(EXT. PWR)	ON (EXT. PWR)
OFF	OFF	OFF	OFF (SYSTEM SERVICED)	OFF	OFF
OFF	OFF	OFF	OFF	OFF	OFF
INSTALLED	INSTALLED	INSTALLED	INSTALLED	INSTALLED	INSTALLED
ACTIVE	EXTENDED	EXTENDED	EXTENDED	EXTENDED	EXTENDED
ACTIVE	OFF/ON	ON	OFF	OFF	OFF
OFF	OFF	OFF	OFF	OFF	OFF
SIMULATED	SIMULATED	SIMULATED	SIMULATED	ON	ON
ME AS 1 ANSPORTER ECIAL CHAMBER FIXTURES	A. SAME AS 1 B. TRANSPORTER	A. SAME AS 1 B. TRANSPORTER C. SPECIAL FIXTURES	A. SAME AS 1 B. TRANSPORTER C. SPECIAL FIXTURES	A. SAME AS 1	A. SAME AS 1A, E, G.
TC	A. STC	A. STC	A. WEIGHT BALANCE EQUIP.	A. SAME AS 1 B. STC	A. SAME AS 1 B. STC
N/A	A. MAGNETIC MAPPING EQUIPMENT	NA	NA	N/A	NA
AME AS 8	A. SAME AS 8	A SAME AS 8	NA	A. CAPSULE SIMULATOR B. S/P SIMULATOR	CAPSULE SIMULATOR
ME AS 1	NA	NA	A. SAME AS 1	A. SAME AS 1	NA
AME AS 9	A. SAME AS 9	A. SAME AS 9	NA	A. SAME AS 9	A. SAME AS 9
OUNT S/C IN SPACE CHAMBER OTATABLE MOUNT. GN SENSORS WITH SIMULATED CANOPUS SOURCES. CK SYSTEM READINESS BY MAND TO CC&S. UBE CHAMBE[illegible] PRESSURE. LY THERMA[illegible] FORM CONI[illegible]SSION LE. URN TO AMBIENT & PERFORM EM REFERENCE TEST.	1. MOUNT S/C ON MAPPING CART. 2. INSTALL IN MAGNETIC SHIELDED ROOM. 3. OPERATE COMPLETE S/C THROUGH SIMULATED FLIGHT SEQUENCE. 4. RECORD MAGNETOMETER DATA AT DISCRETE INTERVALS. 5. WITH ALL SYSTEMS DEENERGIZED ROTATE S/C ABOUT EACH OF 3 AXES. AT MOMENTARY STATIONARY INTERVALS RECORD MAGNETOMETER DATA.	1. TRANSPORT S/C TO SOLAR SOURCE 2. POSITION SO THAT ROLL AXIS POINTS TO SUN 3. VERIFY SYSTEM READINESS BY RF COMMAND TO CC&S 4. EXERCISE S/C IN FOLLOWING MODES: CRUISE; MIDCOURSE MANEUVER; CRUISE MODE BACKUP COMMANDS; ENCOUNTER SEQUENCE; PLAYBACK MODE	1. X-Y PLANE C.G. FIXTURE LEVELED 2. PLACE S/C ON LOAD CELLS 3. RECORD WEIGHTS 4. ROTATE S/C 120° AND RECORD LOAD CELL DATA 5. REPEAT TWICE MORE 6. CALCULATE X-Y PLANE C.G. 7. REPEAT 1-6 WITH Z AXIS C.G. FIXTURE 8. CALCULATE TOTAL WEIGHT & C.G. 9. PURGE AND CLEAN	1. VERIFY S/P INTERFACES WITH S/P SIMULATOR 2. INSTALL S/P PAYLOAD 3. INTERCONNECT ADE & S/P INSTRUMENTS 4. CHECK POINTING ANGLE 5. CHECK INSTR. COVER REMOVAL OPERATION 6. CONNECT ADE & S/C 7. CHECK GROUND SYSTEM 8. TEST ELECTRICAL INTERFACES	1. CHECK ALIGNMENT 2. PERFORM CC&S COMMANDS OF SCIENCE PACKAGES 3. EVALUATE RESPONSE
250 HOURS					

18	19	20	21	22	23
S/C AND PT[illegible] CAPSULE [illegible]F TESTS	INSTALL PTM CAPSULE	S/C - S/P - CAP AMBIENT SYSTEMS TEST	S/C - S/P - CAP LIMITED ENVIRONMENT. TEST	DEMATE PTM CAPSULE	FINAL INSPE AND PREPAR FOR SHIPMEN
VERIFY S/C - PTM CAPSULE RF COMPATIBILITY	INSTALL AND VERIFY FUNCTIONAL CAPABILITY OF CAPSULE	VERIFY S/C - S/P - CAPSULE PERFORMANCE & RECORD PERFORMANCE DATA	ESTABLISH FUNCTIONAL CAPABILITY UNDER ENVIRONMENTAL CONDITIONS	REMOVE PTM CAPSULE	REMOVE EQUIPMENT FOR SHIPMENT. PACKAGE SE EQUIPMENT & SPACECRA SHIPMENT
SAME AS 16 + PTM CAPSULE (NOT INSTALLED)	COMPLETE S/C - S/P - CAPSULE	SAME AS 19	SAME AS 19 PLUS DUMMY SOLAR ARRAY, SHROUD & ADAPTER	COMPLETE S/C - PTM S/P	SEE ABOVE
SAME AS 1.	SAME AS 1	SAME AS 1.	SAME AS 1.	SAME AS 1	SAME AS 1
ON	ON	ON	OFF/ON	OFF	OFF
ON	ON	ON	OFF/ON	OFF	OFF
ON	ON	ON	OFF/ON	OFF	OFF
ON	ON	ON	OFF/ON	OFF	REMOVED
OFF	OFF	ON	OFF/ON	OFF	OFF
OFF	OFF	ON	OFF/ON	OFF	OFF
OFF	OFF	OFF	OFF/ON	OFF	DRY
OFF	OFF	ON	OFF/ON	OFF	OFF
ON (EXT. PWR)	ON (EXT. PWR)	ON (EXT. PWR)*	OFF/ON (EXT. PWR)	OFF	OFF
OFF	OFF	OFF	OFF	OFF	DRY
OFF	OFF	OFF	OFF	OFF	DRY
INSTALLED	INSTALLED	INSTALLED	INSTALLED	INSTALLED	INSTALLED
FOLDED	FOLDED	ACTIVE	EXTENDED	FOLDED	FOLDED
OFF	OFF	ON	OFF/ON	OFF	OFF
OFF	OFF	OFF	OFF	OFF	REMOVED
ON	ON	ON	OFF/ON	OFF	REMOVED
A. SAME AS 1A, E, G	A. SAME AS 1.	A. SAME AS 1A, E, G.	A. TEST FIXTURES B. SAME AS 1.	A. SAME AS 1.	A. SAME AS 1 B. TRANSPORTER
A. STC B. CAPSULE T/S GFE	A. SAME AS 1. B. STC	A. STC	A. STC	NA	NA
NA	N/A	N/A	NA	NA	NA
NA	N/A	N/A	NA	NA	NA
NA	SAME AS 1.	N/A	NA	SAME AS 1.	A. SAME AS 1
A. SAME AS 9 B. S/C TELECOM. SIMULATOR	A. SAME AS 9	A. SAME AS 9	A. SAME AS 9	NA	NA
1. TEST PTM CAPSULE WITH S/C TELECOM. SIMULATOR 2. VERIFY RF ATTENUATION 3. VERIFY CAPSULE RF POWER LEVEL 4. VERIFY CAPSULE TM READOUT 5. VERI[illegible]ULE TM REA[illegible]S/C FOR ALL MOD[illegible]	1. MAKE MECHANICAL INSTALLATION 2. CHECK GROUND SYSTEM INTEGRITY 3. CHECK ELECTRICAL SYSTEM INTERFACE 4. MAKE ELECTRICAL CONNECTIONS 5. CHECKOUT CAPSULE VIA CC&S	1. ESTABLISH SYSTEMS IN CRUISE MODE 2. COMMAND CC&S TO SURVEY PERFORMANCE TREND DATA MONITORING POINTS 3. TRANSMIT & RECORD DATA	1. CONNECT MONITORING EQUIPMENT 2. VERIFY SYSTEM READINESS 3. PERFORM VIBRATION TEST (SEE 11) 4. PERFORM SYSTEM REFERENCE TEST (SEE 9)	1. DISCONNECT ELECTRICAL INTERFACE CONNECTIONS 2. MECHANICALLY DEMATE PTM CAPSULE FROM S/C	1. REMOVE SOLAR PANEL BATTERIES, AND ADAPTE 2. PACKAGE PANELS, AN AND ADAPTER. 3. PREPARE SHIPPING F (TEST BATTERIES RE TEST AREA.)

CTION ATION NT	SHIP TO ETR
SEPARATE PARATE FT FOR	PROVIDE FOR TRANSPORT OF S/C AND SUBASSEMBLIES TO ETR RECORD TRANSPORTATION ENVIRONMENT.
	S/C bus, separated antennas, solar panels, adapter, no batteries and no fluids.
	TO BE DETERMINED
	OFF
	OFF
	OFF
	OFF (ANTENNA REMOVED)
	OFF
	OFF
	DRY
	OFF
	OFF (BATTERIES AND SOLAR PANELS REMOVED)
	DRY
	DRY
	INSTALLED
	FOLDED
	OFF
	OFF (INCOMPLETE)
	REMOVED
	A. SHIPPING CONTAINERS B. TRANSPORTER
	NA
	NA
	NA
	NA
	NA
S, ANTENNAS ER, TENNAS, ORMS, MAIN IN	1. INSTALL S/C ON TRANSPORTER 2. LOAD TRANSPORTER INTO TRANSFER VEHICLE 3. SHIP

Figure 2-3:
Voyager Spacecraft Bus Flight — Acceptance Test Plan

FUNCTION	1 RECEIVE AND INSPECT S/C AND SUBASSEMBLIES	2 CHECKOUT BUS ASSEMBLY AS REQUIRED	3 SPACECRAFT BUS-CAPSULE RF TESTS	4 INSTALL FLIGHT CAPSULE, TEST, & DEMATE	5 MOVE TO FUEL AREA	6
OBJECTIVE	Unpack and verify inventory and apparent condition following shipping.	Uncover discrepant items and correct.	VERIFY S/C -CAPSULE MARS MODE OPERATION (RF COMPATIBILITY)	Install and verify functional capability of capsule. (NOTE: Capsule checked out in separate area)	Provide fueling supplies and equipment in a safe area.	
PHYSICAL CONFIGURATION	BUS LESS LOW GAIN & 2 HIGH GAIN ANTENNAS, VHF ANTENNA, MAGNETOMETER BOOM, SOLAR PANELS (2), ADAPTER & BATTERIES. O/I MOTOR IS DUMMY	BUS COMPLETE WITH ADAPTER, SOLAR PANELS, TEST BATTERIES, ANTENNAS & BOOM ASSEMBLIES, & SCIENCE PAYLOAD	S/C SEPARATE FROM CAPSULE, RF LINK BETWEEN TWO.	SAME AS 1	S/C BUS & CAPSULE WITH SCIENCE PAYLOAD. MOUNTED ON ADAPTER.	
FACILITIES	Spacecraft Checkout Facility CLEAN ROOM	SCF CLEAN ROOM	SCF CLEAN ROOM	SCF CLEAN ROOM	ENROUTE, SCF TO ESA.	
SUBSYSTEM STATUS: RADIO SUBSYSTEMS	OFF	ON FOR CHECKOUT AND SYSTEM TEST	ON	ON FOR CAPSULE C/O, RECEIVES COMMANDS FOR CAPSULE C/O	OFF	
TELEMETRY	OFF	ON	ON	ON FOR RELAY OF DATA FROM TEST MONITORING POINTS	OFF	
DATA STORAGE	OFF	ON	ON	ON	OFF	
ANTENNA	OFF	ON	ON	OFF (TEST VIA TEST CONNECTORS)	OFF	
ATTITUDE REFERENCE	OFF	ON	OFF	OFF	OFF	
AUTOPILOT	OFF	ON	OFF	OFF	OFF	
REACTION CONTROL	OFF	ON	OFF	OFF	OFF	
CENTRAL COMPUTER & SEQUENCE S/S	OFF	ON	ON	ON FOR CAPSULE C/O. INTERROGATE CAPSULE SUBSYSTEM STATUS & RELAYS RESPONSE.	OFF	
ELECTRICAL POWER S/S	OFF	ON (EXTERNAL POWER)	ON (EXT PWR)	ON (EXTERNAL POWER) TO SUPPLY POWER FOR CAPSULE C/O.	OFF	
MIDCOURSE PROPULSION S/S	OFF	LEAKAGE TESTS	OFF	OFF	OFF	
ORBIT-INSERTION PROPULSION S/S	OFF	OFF	OFF	OFF	OFF	
STRUCTURE SUBSYSTEM	INSTALLED	INSTALLED	INSTALLED	INSTALLED	INSTALLED	
MECHANICAL SUBSYSTEM	STOWED	FUNCTIONAL CHECK	AS REQUIRED	SCIENCE BOOMS & PLATFORMS EXTENDED.	FOLDED	
TEMPERATURE CONTROL S/S	OFF	CONTROLS CHECKOUT	OFF	OFF	OFF	
PYROTECHNIC SUBSYSTEM	OFF	OFF	OFF	OFF	OFF	
SCIENCE SUBSYSTEM	OFF	OFF	OFF	ON	OFF	
OPERATIONAL SUPPORT EQUIPMENT: HANDLING, TRANSPORTATION, & SHIPPING EQUIPMENT	A. S/C SUPPORT FIXTURE. B. HANDLING SLINGS. C. COMPONENT INST. DEVICE. D. HANDLING DOLLY. E. PROTECTIVE COVER. F. SHIPPING CONTAINERS. G. TRANSPORTER. I. ACCESS EQUIPMENT H. COMPONENT HOLDING FIXTURES.	A. SAME AS 1A, B, C, D, E, F, & H	A. SAME AS 1A, E, I	SAME AS 2	A. SAME AS 1A, B, D, E, G	
TEST EQUIPMENT	A. INSPECTION EQUIP. B. ALIGNMENT FIXTURE. C. JIGS. D. ALIGNMENT DEVICES.	A. ALIGNMENT DEVICES. B. STC C. SSTE	A. STC B. CAPSULE T.S. (GFE)	A. STC	NA	
LAUNCH-SUPPORT EQUIP	NA	NA	NA	NA	NA	
SIMULATORS	NA	A. S/C SIMULATOR (IN STC). B. OTHERS AS REQ'D.	NA	SAME AS 2	NA	
MAINTENANCE & SERVICE EQUIP	NA	A. INSTL. KITS B. SERVICE EQUIP.	NA	SAME AS 2	NA	
MISSION DEPENDENT EQUIP	NA	A. MDE IN STC	A. SAME AS 2	A. SAME AS 2	NA	
SUBFUNCTION	1. Unload from carrier. 2. Load on Transport Vehicle. 3. Transport to SCF 4. Unload and place on handling fixture. 5. Move to clean area. 6. Uncrate and remove protective covers. 7. Inspect visually 8. Confirm configuration	1. INSTALL BUS ON TEST FIXTURE. 2. INSTALL TEST BATTERIES. 3. INSTALL SOLAR PANELS. 4. BUS/STC ELECTRICAL GROUND CHECKOUT. 5. POWER-ON TESTS. 6. SYSTEM TEST.	1. TEST FLIGHT CAPSULE OPEN LOOP AND HARD-LINE RF SIGNAL WITH S/C TELECOMMUNICATIONS SIMULATOR - VERIFY PROPER RF ATTENUATION - VERIFY CAPSULE RF POWER LEVEL - VERIFY CAPSULE TM READOUT FOR OPEN LOOP AND HARD LINE MODES 2. TEST FLIGHT ARTICLES - VERIFY CAPSULE TM READOUT VIA S/C FOR ALL MODES.	1. Make mechanical installation. 2. Check ground system integrity. 3. Check electrical system at interface. 4. Make connections. 5. Checkout capsule via CC&S.	1. Load on carrier. 2. Install protective cover. 3. Transport to ESA.	
ESTIMATE DURATION						

SERVICE S/C AND MOVE TO TEST AREA	7 INSTALL ORDNANCE	8 FINAL SCIENCE PAYLOAD & ENGRG DATA INSTRUMENTATION CALIBRATION	9 MATE S/C & CAPSULE	10 S/C - CAPSULE SYSTEM TEST	11 S/C WEIGHT & BALANCE
FIII and pressurize tanks. INSTALL SOLID MOTOR	Verify correct installation of pyrotechnic control systems and establish connection of devices.	CONFIRM SELECTED CRITICAL INSTRUMENTATION CALIBRATION	INSTALL CAPSULE TO S/C	VERIFY S/C - CAPSULE OPERATION	CONFIRM S/C CENTER OF GRAVITY
S/C BUS & CAPSULE WITH SCIENCE PAYLOAD. MOUNTED ON ADAPTER.	S/C BUS & CAPSULE WITH SCIENCE PAYLOAD. MOUNTED ON ADAPTER.	SAME AS 7.	SAME AS 7.	COMPLETE PLANETARY VEHICLE	SAME AS 7, LESS ADAPTER.
Explosive Safe Area	ESA CLEAN ROOM	ESA	ESA	ESA	ESA
OFF	OFF	OFF	OFF	ON	OFF
OFF	OFF	ON	OFF	ON	OFF
OFF	OFF	ON	OFF	ON	OFF
OFF	OFF	OFF	OFF	ON	OFF
OFF	OFF	OFF	OFF	OFF	OFF
OFF	OFF	OFF	OFF	OFF	OFF
OFF	OFF	OFF	OFF	OFF	OFF
OFF	OFF	ON	OFF	ON	OFF
OFF	OFF/ON (EXTERNAL POWER)	ON (EXT. PWR)	OFF	ON (EXT PWR)	OFF
OFF	OFF	OFF	OFF	OFF	OFF
OFF	OFF	OFF	OFF	OFF	OFF
INSTALLED	INSTALLED	INSTALLED	INSTALLED	INSTALLED	INSTALLED
FOLDED	FOLDED	OFF	OFF	OFF	OFF
OFF	OFF	OFF	OFF	OFF	OFF
OFF	OFF/ON	OFF	OFF	OFF	OFF
OFF	OFF	OFF	OFF	OFF	OFF
1. SAME AS 5.	A. SAME AS 1A, F & G	A. SAME AS 1A, E, I	A. SAME AS 1	A. SAME AS 1A, E	A. SAME AS 1B, E, I
A. PROPULSION SUB-SYSTEM T/S	A. PYROTECHNIC SUBSYSTEM T/S	A. CALIBRATION EQUIPMENT	NA	A. CAPSULE TS	A. WEIGHT/BAL. EQUIP.
LCE REQ'D TO FUEL & SERVICE.	A. LCE REQ'D TO INSTALL ORDNANCE	A. TEST LEADS	NA	A. LCE COMMAND, POWER & MONITOR EQUIPMENT	NA
SAME AS 2	SAME AS 2	NA	NA	NA	NA
A. PROPULSION SYSTEM SERVICE EQUIPMENT	SAME AS 2	NA	NA	NA	NA
NA	NA	NA	NA	A. SAME AS 2.	NA
1. Connect protective devices. 2. Connect servicing equipment. 3. Transfer fluids. 4. Disconnect lines. 5. PROPULSION SYSTEM LEAK CHECK 6. TRANSPORT TO TEST AREA. 7. REALIGN PROPULSION MODULE	1. Check ordnance circuits with simulators. 2. Install devices. 3. Make connections	1. CONNECT STD. CALIBRATION EQUIP. TO INSTRUM. 2. VERIFY PROPER CALIBRATION 3. RECORD CALIBA. DATA 4. DISCONNECT CALIB. EQUIPMENT.	1. HOIST CAPSULE INTO POSITION 2. MAKE ELECT. CONNECTIONS 3. PERFORM MECHANICAL MATING	1. VERIFY CAPSULE POWER LEVEL 2. EXERCISE S/C CC&S 3. VERIFY HARD LINE AND OPEN LOOP T. M.	1. RECORD S/C WT. FROM THREE LOAD CELLS. 2. ROTATE S/C 120° AND RECORD WT. 3. ROTATE S/C 120° AND RECORD WT. 4. CALCUL. C. G. OF X-Y PLANE 5. PERFORM ABOVE TEST FOR Z AXIS C. G. DETERMINATION.

12 FINAL THRUST VECTOR ALIGNMENT	13 MAGNETIC MAPPING PLANETARY VEHICLE	14 INSTALL NOSE FAIRING AND SEAL	15 FINAL CHECKOUT	16 TRANSPORT TO PAD
ALIGN THRUST AXIS	MAP MAGNETIC FIELD FOR 360° ROTATION ABOUT 3 ORTHOGONAL AXES. DETERMINE EFFECT OF S/C ELECTRICAL CURRENT FLOW ON MAGNETIC FIELD AS MEASURED AT MAGNETOMETER.	Establish isolation of planetary S/C from external environment.	Verify performance of shroud RF coupler and final system reference.	Deliver payload to LV integrator.
SAME AS 7.	COMPLETE PLANETARY VEHICLE DEPLOYED IN CRUISE CONFIG. EXTERNAL ELECTRICAL POWER SUPPLIED FOR INTERNAL POWER?	COMPLETE PLANETARY S/C.	COMPLETE PLANETARY S/C ENCAPSULATED IN NOSE FAIRING. INTELLIGENCE INPUT & OUTPUT VIA UMBILICAL & SLAVE ANTENNAS. LOCATED IN LAB WITH LCE SIMULATORS. RF LINE TO DSIF AVAILABLE.	PLANETARY CAPSULE COMPLETE & ENCAPSULATED IN NOSE FAIRING. FAIRING ENCLOSED AREA PURGED & PRESSURIZED.
ESA	MAGNETIC SHIELD ROOM	ESA	ESA	ENROUTE, ESA TO LAUNCH COMPLEX, VIA TRANSPORTER.
OFF	OFF/ON	OFF	ON	OFF
OFF	OFF/ON	OFF	ON	OFF
OFF	OFF/ON	OFF	ON	OFF
OFF	OFF/ON	OFF	ON	OFF
OFF	OFF/ON	OFF	ON	OFF
OFF	OFF/ON	OFF	ON	OFF
OFF	OFF/ON	OFF	OFF	OFF
OFF	OFF/ON	OFF	ON	OFF
OFF	OFF/ON (EXTERNAL POWER)	OFF	ON (EXTERNAL POWER)	OFF
OFF	OFF	OFF	OFF	OFF
OFF	OFF	OFF	OFF	OFF
INSTALLED	INSTALLED	INSTALLED	INSTALLED	INSTALLED
OFF	EXTENDED	FOLDED	FOLDED	FOLDED
OFF	OFF	OFF	OFF	OFF
OFF	OFF	OFF	OFF	OFF
OFF	OFF/ON	OFF	OFF/ON	OFF
A. SAME AS 1B, E, I	A. SAME AS 1 A, B, D, G	A. SAME AS 1A, B, E, F & G	A. SAME AS 1G	A. SAME AS 1 B&G
A. TV ALIGN FIXTURE	NA	A. SSTE	NA	NA
NA	A. MAGNETIC MAPPING EQUIPMENT B. SAME AS 10A	A. ENVIRONMENTAL CONTROL	A. SAME AS 10A. B. ENVIRONMENTAL CONTROL	A. ENVIRONMENTAL CONTROL
NA	NA	NA	A. S/C TO LAUNCH COMPLEX B. S/C to LV	NA
NA	NA	A. SAME AS 2	NA	NA
NA	NA	NA	A. MDE AT DSIF 71 & SFOF	NA
1. OPTICALLY ALIGN ATTITUDE CONTROL NOZZLES 2. OPTICALLY ALIGN PROPULSION THRUST CHAMBER	1. MOUNT PLANETARY VEHICLE ON MAPPING CART. 2. INSTALL IN MAGNETIC SHIELD ROOM. 3. OPERATE COMPLETE S/C THRU SIMUL. SEQUENCE. 4. RECORD MAGNETOM. DATA. 5. OPERATE VEHICLE THRU SIMULFLT 6. RECORD MAGNETOM. DATA 7. WITH ALL S-S'S OFF, ROTATE S/C ABOUT EACH OF 3 AXES. RECORD MAGNETOM. DATA AT POINTS.	1. Make mechanical installation. 2. Purge encapsulated area with GN_2 3. Check pressure relief system. 4. Check explosive circuitry	1. Connect LCE simulator to umbilical. 2. Power S/C and radiate to DSIF 71 for evaluation of data at MOC. 3. Command CC&S checkout. 4. Evaluate S/C-to-shroud coupler.	1. Disconnect test equipment. 2. Load on carrier. 3. Install protective devices. 4. Move to launch pad. 5. Transfer to LV integrating contractor.

Figure 2-4: Voyager — Assembly and Checkout at ETR

		1	2	3	4
FUNCTION		MATE ENCAPSULATED PLANETARY VEHICLE TO LAUNCH VEHICLE	FLIGHT READINESS TEST	COUNTDOWN DEMONSTRATION (UP TO AUTOMATIC SEQUENCE)	F-1-DAY OPERATIONS
OBJECTIVE		INTEGRATE PLANETARY VEHICLE TO LAUNCH VEHICLE	VERIFY COMPATIBILITY OF P.V. WITH LCE & RANGE, AND VERIFY SAFETY OF ORDNANCE CIRCUITS	ENSURE AND DEMONSTRATE COMPATIBILITY OF THE TOTAL ACTUAL EQUIPMENT AND PERSONNEL INVOLVED DURING LAUNCH	ESTABLISH OR VERIFY FINAL READINESS FOR LAUNCH
PHYSICAL CONFIGURATION		ENCAPSULATED P.V. FUELED & LOADED WITH ORDNANCE	SAME AS 1. CONNECTED TO LCE AND TO PARASITIC ANTENNAS ON SERVICE TOWER, EXCEPT DURING OPEN LOOP RF TESTS	SAME AS 2	SAME AS 2
FACILITIES		LAUNCH PAD	LAUNCH PAD	LAUNCH PAD	LAUNCH PAD
STATUS SUBSYSTEM	RADIO SUBSYSTEM	OFF	ON/OFF	ON/OFF	OFF
	TELEMETRY SUBSYSTEM	OFF	ON/OFF	ON/OFF	OFF
	DATA STORAGE	OFF	ON/OFF	ON/OFF	OFF
	ANTENNA SUBSYSTEM	STOWED	STOWED	STOWED	STOWED
	ATTITUDE REFERENCE	OFF	ON/OFF	ON/OFF	OFF
	AUTOPILOT SUBSYS	OFF	ON/OFF	ON/OFF	OFF
	REACTION CONTROL	OFF	ON/OFF	OFF	OFF
	C C & S SUBSYSTEM	OFF	ON/OFF	ON/OFF	OFF
	ELECTRICAL POWER	OFF	ON/OFF	ON/OFF (GRD POWER/ BATTERY)	OFF
	MIDCOURSE CORRECTION	OFF	ON/OFF	OFF	OFF
	ORBIT INSERTION	OFF	ON/OFF	OFF	OFF
	STRUCTURE SUBSYSTEM	N/A	N/A	N/A	N/A
	MECHANISMS	STOWED	STOWED	STOWED	STOWED
	TEMP CONTROL	OFF	OFF	OFF	OFF
	PYROTECHNICS	OFF	OFF	OFF (SAFETIED)	OFF (SAFETIED)
	SCIENCE SUBSYSTEM	OFF	ON/OFF	ON/OFF	OFF
OPERATIONAL SUPPORT EQUIPMENT	HANDLING EQUIPMENT	A. TRANSPORTER B. HANDLING FIXTURE C. MECHANICAL SAFETY EQUIP. D. ACCESS EQUIPMENT E. SLING SETS F. INSTALLATION KITS G. PROTECTIVE COVERS	A. ACCESS EQUIPMENT B. HANDLING SLINGS C. PROTECTIVE COVERS D. SAFETY EQUIPMENT MECH.	A. SAME AS 2.	A. SAME AS 2.
	TEST EQUIPMENT				
	LCE	A. UMBILICAL SET	A. ALL BLOCKHOUSE & LAUNCH PAD LCE B. COMPUTER INTERFACE EQUIPMENT	A. SAME AS 2.	A. SAME AS 2.
	MDE — HARDWARE	N/A	A. COMMAND PROCESSING EQUIPMENT B. SUBCARRIER DEMODULATOR & DATA RECONSTRUCTOR C. MASTER DECOMUTATOR & FRAME SYNCHRONIZER	A. SAME AS 2.	A. SAME AS 2.
	MDE — SOFTWARE	N/A	N/A	N/A	A. SAME AS 7, 8, and 9
SUBFUNCTIONS		1. MECHANICALLY MATE VEHICLE 2. CHECK ALL PINS OF INTER-FACING CONNECTORS FOR PROPER VOLTAGE DISTRIBUTION 3. CONNECT UMBILICALS 4. VERIFY ENVIRONMENTAL CONTROL SUPPLY FROM CENTAUR 5. PERFORM POWER ON TEST FROM LCC	1. SEQUENCE C/D AND LAUNCH FUNCTIONS. 2. RF TEST WITH RANGE VIA PARASITIC ANTENNAS 3. OPEN LOOP RF TEST 4. UMBILICAL EJECTION DEMONSTRATION		1. RF CHECKS 2. INSTRUMENTATION CHECK
ESTIMATED DURATION					

5 [illegible]Y [illegible]ONS	6 LAUNCH	7 ACQUIRE ENGINEERING DATA	8 MONITOR & CONTROL PLANETARY VEHICLE SUBSYSTEMS	9 INTEGRATE MISSION CONTROL
ACCOMPLISH PREPARATIONS FOR LAUNCH		SELF-EVIDENT	SELF-EVIDENT	SELF-EVIDENT
SAME AS 2		IN BOOST PHASE	IN BOOST PHASE	IN BOOST PHASE
LAUNCH PAD		N/A	N/A	N/A
OFF/ON		ON	ON	ON
OFF/ON		ON	ON	ON
OFF/ON/OFF		OFF	OFF	OFF
STOWED		STOWED	STOWED	STOWED
OFF/ON/OFF		OFF	OFF	OFF
ON/OFF		OFF	OFF	OFF
OFF		OFF	OFF	OFF
OFF/ON/OFF		OFF	OFF	OFF
OFF/ON GRD POWER/ BATTERY)		ON (BATTERY)	ON (BATTERY)	ON (BATTERY)
OFF		OFF	OFF	OFF
OFF		OFF	OFF	OFF
N/A		N/A	N/A	N/A
STORED		STOWED	STOWED	STOWED
OFF		OFF	OFF	OFF
OFF (SAFETIED/ARMED)		OFF (ARMED)	OFF (ARMED)	OFF (ARMED)
OFF/ON/OFF		OFF	OFF	OFF
NA		N/A	N/A	N/A
		N/A	N/A	N/A
SAME AS 2.		NA	NA	NA
SAME AS 2.		A. SUBCARRIER DEMODULATOR & DATA RECONSTRUCTOR B. MASTER DECOMMUTATOR & FRAME SYNCHRONIZER C. COMPUTER INTERFACE EQUIP. D. ALARM DISPLAY PANEL	A. SAME AS 7. + B. COMMAND PROCESSING EQUIP.	NA
SAME AS 7, 8, and 9		A. TELEMETRY DATA HANDLING PROGRAMS (DSIF) B. TELEMETRY PROCESSING AND DATA HANDLING PROGRAMS (SFOF)	A. COMMAND PROCESSING PROGRAMS B. TELEMETRY DATA HANDLING PROGRAMS C. TELEMETRY PROCESSING & DATA HANDLING PROGRAMS D. FLIGHT PATH ANALYSIS PROGRAMS E. SPACECRAFT PERFORMANCE ANALYSIS PROGRAMS	A. SAME AS 8. B. TIME CORRELATION PROGRAM.
T/M EVALUATED AT DSIF 71 SYSTEM CHECKOUT SCIENCE SUBSYSTEM OCALIBRATION FLIGHT CAPSULE CHECKED STO SWITCHING FROM INTERNAL ER TO EXTERNAL POWER TO CHARGE BATTERIES RF CHECKS, TOWER REMOVED SWITCH [illegible] INTERNAL POWER		1. DATA TRANSMITTED TO DSIF & RANGE TRACKING STATIONS 2. RECEIVE T/M DATA 3. CONVERT FOR TRANSMISSION TO MOC & LCC 4. TRANSMIT 5. ENTER INTO COMPUTERS 6. STORE 7. PROCESS DATA FOR REAL TIME DISPLAY & ALARM MONITORING	1. MONITOR TEMPERATURES 2. MONITOR ELECTRICAL POWER SUBSYSTEM PERFORMANCE 3. DETERMINE STATUS OF CRITICAL COMPONENTS FOR TREND DATA	1. PROVIDE TIME CORRELATION BETWEEN S/C & GMT 2. PROVIDE FOR FORMATTING OF COMMANDS FOR SEPARATION & CONFIGURATION CONTROL

Figure 2-5: OSE Requirements Launch Operations

FUNCTION			1 ACQUIRE ENGINEERING & SCIENTIFIC DATA ON S/C POSITION, SUBSYSTEM STATUS, SCIENTIFIC DATA	
FACILITIES			DSIF	SFOF
OPERATIONAL SUPPORT EQUIPMENT - MDE	COMMAND AND T/M DATA HANDLING	HARDWARE	A. DOWN CONVERTER B. TELEMETRY DEMODULATION EQUIP. C. TELEMETRY DECOMMUTATION & FORMATTING EQUIP. D. COMPUTER INTERFACE EQUIP.	A. ALARM DISPLAY PANELS B. NON-REAL TIME DATA PROCESSING EQUIP.
		SOFTWARE	A. TELEMETRY DATA HANDLING PROGRAMS	A. T/M PROCESSING & DATA HANDLING PROGRAM
	FLIGHT PATH ANALYSIS AND CONTROL	HARDWARE	N/A	N/A
		SOFTWARE	N/A	N/A
	S/C PERFORMANCE AND CONTROL	HARDWARE	N/A	N/A
		SOFTWARE	N/A	N/A
SUBFUNCTIONS			1. DATA TRANSMITTED TO DSIF 2. RECEIVE T/M DATA 3. RECORD DATA FOR NON-REAL TRANSMISSION 4. CONVERT FOR TRANSMISSION 5. TRANSMIT TO SFOF 6. ENTER INTO COMPUTER 7. STORE DATA 8. PROCESS DATA FOR REAL TIME DISPLAY AND ALARM MONITORING. 9. PROCESS DATA FOR NON-REAL TIME ANALYSIS.	
EST. DURATION				

2 ANALYZE DATA		3 MONITOR & CONTROL PLANETARY VEHICLE, AND S/C BUS AND CAPSULE		4 INTEGRATE MISSION CONTROL	
DSIF	SFOF	DSIF	SFOF	DSIF	SFOF
Y N/A	A. ALARM DISPLAY PANEL	A. SAME AS 1. B. COMAND PROCESSING EQUIP.	A. SAME AS 1.	A. TELECOMMUNICATIONS SIMULATOR	N/A
N/A	A. SAME AS 1.	A. SAME AS 1. B. COMMAND PROCESSING PROGRAM	A. SAME AS 1.	N/A	N/A
N/A	N/A	N/A	N/A	N/A	N/A
N/A	A. FLIGHT PATH ANALYSIS PROGRAM	N/A	A. SAME AS 2.	N/A	A. SAME AS 2.
N/A	N/A	N/A	N/A	N/A	N/A
N/A	A. S/C PERFORMANCE ANALYSIS PROGRAM	N/A	A. SAME AS 2.	N/A	A. SAME AS 2. B. MISSION INTEGRATION & CONTROL PROGRAM TIME CORRELATION EVENTS LIST
1. ACQUIRE POSITION OF S/C AND PREDICT ORBIT 2. VERIFY ORBIT AND POSITION 3. DETERMINE CORRECTION 4. UPDATE ORBIT STATUS 5. COMPUTE STATUS OF VELOCITY CONTROL REMAINING 6. COMPUTE CAPSULE SEPARATION MANEUVER 7. DETERMINF ORBIT STATUS 8. DETERMINE ORBIT INSERTION MANEUVER 9. DETERMINE MARTIAN ORBIT PARAMETERS 10. DETERMINE ATTITUDE CONTROL COMMANDS FOR PHOTOS 11. DETERMINE STATUS AND PREDICT STATUS OF CRITICAL COMPONENTS		1. MONITOR TEMP. AND PREDICT COMPONENT TEMP. AND THERMAL CONSTRAINT VIOLATIONS 2. MONITOR ELECTRICAL POWER PERFORMANCE AND PREDICT FUTURE PERFORMANCE 3. MONITOR GAS CONSUMPTION 4. MONITOR & PREDICT COMMUNICATION SYSTEM SIGNAL MARGIN 5. IDENTIFY STAR ACQUIRED BY TRACKERS		1. PROVIDE TIME CORRELATION BETWEEN S/C AND GMT 2. PROVIDE FOR FORMATTING OF COMMANDS AND SIMULATION TEST BEFORE TRANSMISSION TO S/C	

Figure 2-6: OSE Requirements Mission Operations

As shown in Figure 2-1 before assembly and testing of the proof test model (PTM), spacecraft subsystems are assembled into an engineering model to demonstrate compatibility of subsystems and with prototype OSE. Concurrently, subsystems are subjected to type approval testing (TAT) and development tests on structural, thermal, and dynamic models of the Spacecraft Bus. These models are also used to demonstrate compatibility with assembly, handling, and shipping equipment.

After completion of subsystem TAT, subsystems are subjected to flight acceptance tests (FAT) and then assembled into proof test models (PTM) for design verification tests. Following the completion of these tests, one of the PTM's is shipped to ETR for early demonstration of compatibility with OSE at the test range facilities, including STC, LCE and MDE at the launch operations system (LOS), mission operations system (MOS), and DSIF Station 71.

After design verification, other subsystems that have completed TAT are assembled into flight spacecraft, which are then subjected to flight acceptance tests at the spacecraft level. The science package is then installed, a prototype flight capsule is mated with the bus, and additional tests are performed. After the tests have been completed, the capsule is removed and the spacecraft shipped to ETR.

At ETR, the flight spacecraft is run through functional tests at the spacecraft assembly facility (SAF). These tests are run with and without the flight capsule to verify that these units are compatible and that flight readiness has not been impaired since completion of FAT.

Following these operations, the capsule is removed and sent through appropriate facilities for sterilization and servicing. The spacecraft is sent to the ESA for further processing.

At the ESA, the dummy orbit injection motor is replaced by a live motor, the capsule reinstalled, and magnetic mapping performed. The capsule is then removed. The spacecraft is serviced, pyrotechnics installed, weight and balance data taken, motor alignment and thrust vector calibrations made, and limited functional testing performed. The capsule is again mated to the spacecraft and final weight and balance and thrust vector alignment operations are completed. The nose fairing is installed and pressurized and the completed nose fairing and Planetary Vehicle are moved to the launch complex for installation on the launch vehicle.

Operations on the Planetary Vehicle (PV) as installed on the launch vehicle involve monitoring of PV subsystems and limited exercising of selected subsystems to ensure flight readiness. This is accomplished primarily through the RF links with backup by umbilical connection for critical functions.

After launch and injection into transit trajectory, command control of the PV is performed from the SFOF, and engineering trajectory and science data are transmitted back to the SFOF through the DSIF tracking stations for all flight phases of the mission.

The results of the flow analyses are displayed on the matrix charts (Figures 2-2 through 2-6) and provide an index to itemizing and describing specific equipment.

Detailed functions are shown across the top of each matrix chart for each of these five matrices. To establish the requirements for test and other operations within each function, the objective or goal of each function, the operations or subfunctions, and the configuration of each test were defined. Each of these described functions was then analysed with respect to various kinds of equipment that make up the categories of OSE. The usage of OSE was then indicated by appropriate entries in the matrices.

2.2 OSE DESIGN PARAMETERS

The analysis performed relative to test flow resulted in identification of the need for various OSE. Along with this, the program constraints and requirements were identified. Using these as a basis and the flow sequence as a guide, concepts and characteristics of each of the categories of OSE were established and design restraints defined. The results of this study are included in Tables 2-1 through 2-4. These tables provide the basis for the OSE designs presented in the following sections of this document.

Program Con

1971 Voyager mission will use two launch pads (

A total launch period of 45-60 days will be prov

Three flight-ready Planetary Vehicles will be ma

System run time on the spare Planetary Vehicle i

AFETR facilities at Cape Kennedy, Florida, will

Pre-launch assembly and checkout will be condu
flight spacecraft.

An explosive safe facility (ESF/ESA) will be use
final spacecraft alignments, installation of other
Spacecraft and Planetary Vehicle, Planetary Vel

DSN requirements are as defined in Jet Propulsio

Range Safety requirements are as defined in AFE

Communications link to support the various mode
requirements of range safety as well as those of c

OSE Environmental Conditions—The environmen
"Preliminary Voyager 1971 Specifications"

21 (1)

straints Affecting OSE

AFETR Pads 34 and 37B)

ided with a daily firing window of two hours.

de ready for each launch — one on each pad plus one spare

s required for acceptance of all flight spares.

be used for launch and pre-launch operations.

cted at the Spacecraft Checkout Facility (SCF) for the

for flight capsule sterilization, propellant gas loading,
hazardous components, magnetic mapping of Flight
icle encapsulation in the Launch Vehicle nose fairing.

n Laboratory Document EPD-283

RP-80-2.

s of operations are provided to comply with the EMI
ll pre-launch activities.

for OSE is as defined in JPL Project Document 45

21 (B)

Table 2-1:

MISSION DEPENDENT EQUIPMENT	LAUNCH COMPLEX EQUIPMENT	SYSTEMS TEST COMPLEX	ASSEMBLY, HANDLING & SHIPPING EQUIPMENT	SUB-SYSTEM TEST EQUIPMENT	SIMULATOR	SPECIAL SYSTEM LEVEL EQUIPMENT
X	X		X		X	
X	X	X	X		X	X
X	X	X	X	X		X
		X				
X	X	X	X	X	X	X
X	X	X	X		X	
X	X		X	X		X
X	X	X		X	X	X
X	X	X	X	X	X	X
X	X	X			X	
X	X	X	X	X	X	X

Program R

All flight space systems (including spares) must be

Data from the Planetary Vehicle while on the lau

Test equipment and environmental facilities provi
its subsystem.

The flight telemetry data list must be sufficient f
mode identification.

All test data must be in a format for computer en

OSE Planetary Vehicle Safety—All OSE will be
Planetary Vehicle before being connected to any
following:

1) Proof loading—All AHSE (including facili
2) Electrical Compatibility—Planetary Vehic
3) Inclusion of fail-safe features—STC, LCE,

Two fundamental approaches are used to govern t
The approaches are summarized as follows:

1) Zero Net Current in Minimum Cross-Sectio
This approach states that the total net curr
the cross-sectional area of each cable bun
that: (1) each outgoing line must be route
equal the return current. Application of t
   a) Minimize common mode current;
   b) Minimize generated magnetic fields;
   c) Minimize susceptibility to magnetic fi
   d) Eliminate ground loops.

2) Elimination of Common Impedance
This approach implies that circuit elements
their interference characteristics, then gro
circuit returns must be separated from sign
separate from low-level signal returns. A
coupling.

Requirements Affecting OSE

individually flight acceptance tested.

nch pad is obtained via an RF link and hard line.

de beyond-design-limits testing of the spacecraft and

or subsystem performance and trend evaluation and failure

ry and processing, for real time evaluation as appropriate.

tested and approved as being safe to use with any
Planetary Vehicle. Such tests will include the

y equipment)
le, with STC, LCE, BCE, and special testing equipment
AHSE, environmental test equipment

he design of power, signal and control distribution networks.

nal Area
ent in each cable bundle shall be equal to zero, and that
dle shall be minimized. Within cable bundles it requires
d adjacent to its return; and (2) each outgoing current must
his rule is intended to accomplish the following:

elds;

, equipment and subsystems be grouped according to
und referenced singly or by group. For example, power
il returns; and high-level signal returns must be kept
plication of this rule is intended to minimize hard wire

MISSION DEPENDENT EQUIPMENT	LAUNCH COMPLEX EQUIPMENT	SYSTEMS TEST COMPLEX	ASSEMBLY HANDLIN SHIPPING EQUIPMEN
X		X	
X	X		
X	X	X	X
X	X	X	
X	X	X	X
X	X	X	X
X	X	X	
X	X	X	

23 (3)

Table 2-2:

G & IT	SUB-SYSTEM TEST EQUIPMENT	SIMULATORS	SPECIAL SYSTEM LEVEL EQUIPMENT
	X		
		X	
	X	X	X
	X		
	X	X	X
	X		X
	X	X	X
	X	X	X

Program Req

Protective Treatment—When materials are use
subject to deterioration when exposed to climo
intended usage, they are to be protected in a
mance requirements of the Voyager program.

Fungus Proofing—The use of fungi nutrient ma
cannot be avoided, fungi-nutrient materials w
from exposure.

Electrolytic Corrosion—Dissimilar metals are
against electrolytic corrosion.

OSE Power—All elements of the OSE operate
source and/or 120-208 volt, 400 cps, 3 Ø four-
an appropriate overload protective device. Th
and the transient effects of power switching no
takes the form of isolation introduced at the po
quadruply shielded isolation transformer (such
required.

25 (1)

uirements Affecting OSE

d in the construction of the ground equipment that are
tic and environmental conditions likely to occur during
manner that will permit them to comply with the perfor-

erial is to be avoided. Where the use of these materials
ll be pretreated with an acceptable fungicide, or shielded

ot to be used in intimate contact unless suitably protected

from a 105-125 volt, 60 cps, 1 Ø, three-wire power
-wire power sources. Each rack or group of racks has
e AC power distribution lines are protected from noise
rmally performed by subsystem OSE. This protection
wer input terminals of each item of OSE. A triply or
as the Topaz Transformer Products series) is used where

MISSION DEPENDENT EQUIPMENT	LAUNCH COMPLEX EQUIPMENT	SYSTEMS TEST COMPLEX	ASSEMB HANDLI SHIPPIN EQUIPM
X	X	X	X
X	X	X	X
X	X	X	X
X	X	X	X

Table 2.2: Cont.

LY NG G ENT	SUB-SYSTEM TEST EQUIPMENT	SIMULATORS	SPECIAL SYSTEM LEVEL EQUIPMENT
	X	X	X
	X	X	X
	X	X	X
	X	X	X

OSE CONCEPTS AN

The Centaur VHF telemetry signals are monitored to
the Planetary Vehicle is on the launch pad.

A Voyager OSE Packaging Standards Manual, to be
mechanical and electronic packaging techniques and
OSE design.

System level, end-to-end tests are performed on the
simulated, or separated, simulating mission operatior

All OSE circuits which monitor flight telemetered fu
spacecraft and/or Planetary Vehicle simulate the veh
from spacecraft subsystem through CC&S).

The design of all OSE test sets assures that stimuli se
or not the measured response is good or bad. This al

The STC includes as a minimum, major subassemblies
subsystem test sets are designed such that this STC in
a system level test set which is efficient and conveni

All OSE cabling used in testing the functions exercis
simulates the LCE cabling impedance.

STC's are assigned to individual spacecraft as are tes
STC's are transportable in combined complexes (with
can be handled with AHAS and commercially availab
STC concept minimizes realignment, and recalibratic

OSE test control method is by mechanized sequencer
and pre-acceptance level test is permitted where cos

OSE in contact with sterile spacecraft equipment is
of potential increases in sterilization requirements a
Volume B.)

All OSE test equipment is capable of being interch
parts with same part number will be identical in form

OSE for a given system or subsystem is of the same de
on all units concurrently.

ID CHARACTERISTICS

verify Planetary Vehicle S-band telemetry data when

developed during Phases IB and II, will define the
equipment standards which will be applied on all

complete spacecraft with the Capsule installed,
n modes.

nctions at the subsystem level in the spacecraft bus,
hicle circuitry of those functions (i.e., circuit path

quencing is independent of the decision of whether
lows out-of-tolerance condition displays or printout.

of the various OSE subsystem test sets (SSTE). The
tegration can be readily accomplished, providing
ent to operate and maintain.

ed during prelaunch checkout or launch-monitoring

t teams to form an integral test complex. In addition
simple interfaces allowing separation into packages which
le handling equipment. The combined or integrated
on.

with manual override. Deviations at the acceptance
t or reliability reasons justify.

designed to prevent recontamination. (OSE in support
waits the results of analysis discussed in Section 3.3,

anged with test equipment of the same design. All
, fit and function.

sign configuration. Change control will be exercised

MISSION DEPENDENT EQUIPMENT	LAUNCH COMPLEX EQUIPMENT	SYSTEMS TEST COMPLEX	ASSEM HANI SHIPP EQUI
	X	X	
X	X	X	
X	X	X	
X	X	X	
X	X	X	
X		X	
	X	X	
		X	
X		X	
X	X	X	
X	X	X	

Table 2-3:

ABLY OLIN & ING PMENT	SUB-SYSTEM TEST EQUIPMENT	SIMULATORS	SPECIAL SYSTEM LEVEL EQUIPMENT
		X	
	X		X
X		X	X
	X	X	
	X		
X	X		
	X		X
X	X		
	X		X
X			
X	X	X	X
X	X	X	X

OSE Concepts

Supplemental testing is included for fault detectic
data and maintenance requirements.

OSE functional test equipment capability is dictat
extreme test capability.

The flight telemetry data list is included as a mini
as required at the individual test levels from the

OSE designs are established for the total ground p
this includes the various unique data requirements
ments.

All test (and monitoring) data is provided in quan
data only. This does not rule out supplemental di
conditions.

OSE test equipment (in combination with Test Pro
of its interfaces and loads to achieve repeatable t

For trend data purposes, OSE provides permanent
at the system, subsystem, and spares level of 1) ev
running time on the test article, 4) associated shi

OSE Personnel Safety—The OSE is designed to m
testing, pressure bottle filling, installation and c

and Characteristics

n and diagnostic troubleshooting and to satisfy trend

ed by the requirements for the tests requiring the most

imum for ground testing and is amplified and supplemented
launch pad back to factory.

rocessing sequence from manufacture through launch,
and as indicated above the pertinent flight measure-

titative terms (or digital equivalent) and not as go/no-go
splays or printouts showing alarms or out-of-tolerance

cedure) provides realistic simulations to the test article
est results within close tolerances.

data records on all articles when transported or operated
vent location, 2) test article identification, 3) elapsed
pping, handling, storage and/or test conditions.

inimize hazards to personnel during hoisting, handling,
onnection of squibs, and rocket propellant loading.

MISSION DEPENDENT EQUIPMENT	LAUNCH COMPLEX EQUIPMENT	SYSTEMS TEST COMPLEX	ASSEMBLY HANDLING SHIPPING EQUIPMENT
X	X	X	X
X	X	X	X
X	X	X	
X	X	X	
X	X	X	X
X		X	X
X	X	X	X
X	X	X	X

Table 2-3: Cont.

Y, NG & ; NT	SUB-SYSTEM TEST EQUIPMENT	SIMULATORS	SPECIAL SYSTEM LEVEL EQUIPMENT
	X	X	X
	X		
	X		X
	X		
	X	X	X
	X	X	
	X	X	X
	X	X	X

OSE

OSE CLEANLINESS--The AHSE equipment will be
are compatible with use in a clean room environme

ELECTRICAL ISOLATION--Electrical connections
are not to influence the operation of the spacecra
therefore provide such isolation as is required to e
craft. All circuits in the OSE which interface wi
from the OSE chassis ground.

ELECTROMAGNETIC INTERFERENCE --The desig
electromagnetic interference is to be controlled to
other equipment, both ground and spacecraft, are
produced by either ground equipment or spacecraf

GROUNDING--The following concepts for ground
of system test equipment and associated cabling, t
between test equipment and the corresponding subs
together at a common point with wire (No. 2 AWG
direct-access cables. A common tie point is to be

CIRCUIT DESIGN PRACTICE--OSE circuit design
with the following additional concepts:

1) The OSE has self-check capability. Operat
or system testing is not required.
2) OSE circuit maintainability is provided.
   a) Standard circuits and parts are used to fa
   b) Circuit maintainability is optimized.
   c) The OSE is easily inspected.
   d) The OSE is easily repaired and tested.
   e) The OSE is reproducible using industrial

Restraints

designed to facilitate cleaning, and the materials used
nt.

to the spacecraft from the OSE for purposes of monitoring
t. The electrical interfaces between spacecraft and OSE
iminate any interaction between the OSE and the space-
h the spacecraft have circuit returns which are isolated

n of OSE capable of generation of, or susceptibility to,
the extent that its performance and the performance of
not changed as the result of electro-magnetic interference
.

ing are to be adhered to, both in design and fabrication
eliminate potential ground loops and polarity problems
ystem. All OSE consoles and the spacecraft are to be tied
or larger) which follows the same physical route as the
located at or near the spacecraft system test fixture.

practice is as defined in Volume A, Section 2 ,

ion of the spacecraft to verify OSE readiness for subsystem

cilitate repair, operation, and logistic support.

standards of manufacturing.

MISSION DEPENDENT EQUIPMENT	LAUNCH COMPLEX EQUIPMENT	SYSTEMS TEST COMPLEX	ASSE HAN & SH EQUI
X	X	X	
X	X	X	
X	X	X	
X	X	X	

3 / 3

Cont. Table 2-4:

ABLY, DLING PPING PMENT	SUB-SYSTEM TEST EQUIPMENT	SIMULATORS	SPECIAL SYSTEM LEVEL EQUIPMENT
X			
	X	X	X
X	X	X	X
X	X	X	X
X	X	X	X

OSE Re

Shielding—Shielded cables, twisted pair or other
of and susceptibility to electromagnetic interferen

1) RF (above 150 Kc) shields are referenced to
   a) At both ends when coaxial transmission
   b) At both ends and at intermediate points
   between intermediate ground points is n

2) Audio (below 150 Kc) shields are referenced
   is called out in the appropriate equipment s

3) The electrical continuity of shields is maint
   between the signal source and load. Conne
   to the associated signal and signal return.

4) The shield pigtail length used for grounding

5) All shielding is insulated to avoid inadverte

Wiring and Cabling—Cables are, in general, clas
first contains power leads and other switching tran
leads. These two groups are kept in separate cabl
distance sufficient to minimize noise transfer.

When all pins on a cable connector are not utilize
All unshielded spare leads are to be connected to
capacitive effect is detrimental.

OSE Reliability—The design concept for OSE reli
OSE considered critical to the Voyager mission.

OSE Mechanical Design and Packaging—The Voy
program will be established later in the design pha

OSE Construction-General—The OSE will be repr
Commercial components are selected wherever the

OSE Maintainability—Each article of OSE will be
parts or assemblies down to the lowest plug-in mod
selected as spares are inherently physically interch
interchangeable without changes of parts of structu
ments required to effect interchange of spares will
instructions to be furnished with the equipment. D
and maintainability is governed by JPL specificati

straints

appropriate techniques are used to minimize generation
:es. Specifically:

:hassis or structure
ines are used,
vhen other than coaxial line is used. The distance
t to exceed 1/10 wave length of the transmitted signal.

at the receiving end only. The shield reference point
ecifications.

ined through connectors and junction boxes installed
:tor pins used for shield connection are to be adjacent

s to be 3 inches or less.

t grounding to structure, chassis or console frames.
sified and physically separated into two groups. The
ient leads. The second consists of signal and monitor
s and are physically separated from each other by a

d, spare leads are to be incorporated into the cable.
round at one end only, except in cases where the

bility is as defined in D2-82709-1, for that

ger OSE mechanical design and packaging standardization
e (during Phase IB).

ducible using industrial standards of manufacturing.
meet requirements.

designed to permit maintenance by replacement of
le or circuit card level item. The parts and assemblies
angeable without modification, and are functionally
e and with minimum adjustments. Functional adjust-
be clearly defined in the maintenance and operating
SIF Mi[redacted]ion Dependent Equipment interchangeability
n 89[redacted].

MI[illegible]ON DEPENDENT EQUIPMENT	LAUNCH COMPLEX EQUIPMENT	SYSTEMS TEST COMPLEX	ASSEMB HANDLI SHIPPIN EQUIPM
X	X	X	X
X	X	X	X
X	X	X	X
X	X	X	X
X	X	X	X

Table 2-4: Cont.

-Y, NG G ENT	SUB-SYSTEM TEST EQUIPMENT	SIMULATORS	SPECIAL SYSTEM LEVEL EQUIPMENT
	X	X	X
	X	X	X
	X	X	X
	X	X	X
	X	X	X

2.3 SYSTEM LEVEL OSE DESIGN CRITERIA

System Level OSE is that operational support equipment which is primarily intended to support the spacecraft system, including the assembly, handling, and shipping equipment (AHSE), the system test complex (STC), the launch comples equipment (LCE) and the mission dependent equipment (MDE) of the deep-space network (DSN). Subsystem test equipment is primarily intended for support of spacecraft subsystems and to provide the major assemblies for incorporation into LCE and STC as required.

2.3.1 Mission Dependent Equipment (MDE)

The mission dependent equipment at the deep space network (DSN) site will provide the following:

1) Telemetry and command subsystem interfaces at DSIF;
2) Computer programs to process telemetry and command data stations.
3) Computer programs for real-time processing of telemetry data at the SFOF.
4) Computer programs for near-real-time and non-real-time analysis of spacecraft performance, orbit, maneuvers, etc.

The designation of a piece of equipment as mission-dependent places the constraint that an identical unit be provided for all system tests and for the prelaunch checkout. This equipment must be used in the test complex for all functional operations which the equipment would normally provide at the DSN. An exception to this is that MDE at the SFOF will not always be duplicated. This equipment, while checked out itself, is not used at all STC stations.

The mission dependent equipment will support the following mission operating system functional requirements:

1) Determine from launch-to-mission termination the spacecraft position and volocity as a function of time;
2) Generate prediction information for tracking the spacecraft and capsule;
3) Control the spacecraft and capsule by transmission of appropriate commands;
4) Determine flight path corrections and generate the necessary command to accomplish flight path correction maneuvers;
5) Evaluate the effects of aiming-point deviations, orbit deviations, or equipment nonstandard performance upon the objectives of the mission;
6) Coordinate and maintain contact between the SFOF and the DSIF tracking stations;
7) Monitor and analyze telemetry data to evaluate spacecraft and capsule performance.

2.3.2 Launch Complex Equipment

The launch complex equipment (LCE) is that equipment which monitors and conditions the spacecraft defined in Volume A for launch, and hence must have the following characteristics:

1) Permit complete exercising of all prelaunch functions;
2) Afford monitoring in real-time of the spacecraft behavior;
3) Incorporate capability for prelaunch testing of the flight capsule;

4) Afford test repeatability;

5) Have self-check capability prior to and during test without test interruption.

The launch complex includes all units of mission dependent equipment for all functional operations which the MDE would normally provide at the DSIF's except the frequency down converter.

2.3.3 System Test Complex

The system test complex is the equipment which provides the capability to test spacecraft from initial assembly through a complete test program up to and including part of the launch operations. This equipment will

1) Permit complete exercising of all spacecraft mechanical and electrical functions;

2) Afford monitoring in real-time of the spacecraft behavior;

3) Have self-check capability prior to and during test without test interruption;

4) Be capable of independently testing one or more subsystems at a time, as well as the entire spacecraft;

5) Provide real-time test records with the following information:

   a) Name of test;

   b) Function exercised;

   c) Time;

   d) Edited data with indications of questionable data;

6) Afford test repeatability;

7) Provide for detection of failures. The fault isolation need only to be a subsystem level;

8) Provide a record of accumulated test time on overall spacecraft equipment;

9) Include all units of mission dependent equipment for all function operations which the MDE would normally provide at the deep space network (DSN);

10) Contain subsystem test equipment (SSTE) subassemblies, packaged as functional entities, to provide the following functions for the subsystem: (a) power stimuli, (b) signal stimuli, (c) programmed test procedure, (d) external cabling, (e) signal conditioners/transducers, (f) measuring instruments, (g) permanent data recorders. In addition, the SSTE programmable mechanized sequences will accept a program (or a programmed procedure) of a type to be specified by the STC designer later in the design phase (during Phase IB). The STC does not contain the full capability of the SSTE in each of the functional areas noted above, but does contain enough to accomplish the STC function.

2.3.4 Assembly, Handling, and Shipping Equipments (AHSE)

The assembly, handling, and shipping equipment (AHSE) will provide:

1) The capability of safely lifting, holding, and positioning subsystems during system assembly and test;

2) The capability of safely lifting, holding, and positioning systems during Planetary Vehicle assembly and tests;

3) Means for maintaining contamination requirements during transportion of subsystems, systems, and the Planetary Vehicle.

4) Means for maintaining environmental requirements during transportation of subsystems, systems, and the Planetary Vehicle.

2.3.5 Subsystem Test Equipment

Subsystem test equipment will be made up of the necessary equipment for subsystem testing and consists of the following: a) power stimuli, b) signal stimuli, c) programmable mechanized sequencer with manual override, d) programmed test procedure, e) test equipment basic support items -- rack, internal power, distribution panels, etc., f) external cabling, g) signal conditioners and transducers, h) measuring instruments, i) direct readout recorders and displays, j) permanent data recorders and k) simulated loads -- imposed by interfacing subsystems.

Of these items noted above, a, b, d, f, g, h, j, and k are packaged as functional entities with simple, well-defined interfaces so that they can be easily and readily incorporated into the STC design. Their conceptual design is as follows:

a) Power stimuli will be identical to that provided in the LCE and STC for spacecraft power.

b) Signal stimuli will consist of: (1) stimuli which duplicates mission operation stimuli to the subsystem under test; (2) additional stimuli needed, if any, to detect faults and isolate them to the flight acceptable spares level; (3) additional stimuli needed, if any, to perform development, design verification and type approval testing, and to detect and isolate faults to assembly levels lower than the flight adaptable spares level.

d) The programmed test procedure will simulate mission operations in real time, abbreviating by compression only those mission phases of interplanetary cruise and other long term steady state conditions. The program test procedure will be of a type to be compatible and usable on the STC.

f) External cabling consisting of (1) that cabling providing power to the subsystem under test will simulate LCE spacecraft power cabling, (2) that cabling which monitors test points, during spacecraft testing, will be identical to the STC cables accomplishing this function, (3) additional cabling required to perform subsystem testing is subject to constraints of Voyager program standardization and reliability requirements to be specified during design phase.

g) The signal conditioners/transducers for (1) those functions monitored during mission operations (including launch) and during STC testing will be identical to those used in the MDE, LCE, and STC, as applicable, (2) those additional functions, monitored during subsystem testing are subject to constraints of the Voyager program standardization and OSE reliability requirements.

h) Measuring instruments (same as g).

j) Permanent data recorders (same as g).

k) Where simulators are required as a functional entity they will be supplied by the subsystem designer whose subsystem is simulated.

Subsystem test sets will be used at all locations where the subsystem or its individual subassemblies (flight acceptable spares level) are

tested independent of other subsystems except at STC locations, the STC having the capability to test subsystems independently.

Operations Concepts--End-to-end testing is to be used. The applicable portions of the flight telemetered data list are included, amplified and supplemented as required by additional stimuli and monitoring points to detect failures and perform diagnostic troubleshooting. The power supply will have the same characteristics as the spacecraft power subsystem and will be capable of being varied. Stimuli are all controllable to the extent required to thoroughly exercise the subsystem to its design limits. The programmed procedure incorporates the recording of test conditions and elapsed run times on test equipment and spacecraft subsystems, as well as test article identification, test location, and associated conditions. Cooling is provided by conditioned air at the proper temperature and flow rates to convectively cool the radiating surfaces of the spacecraft subsystem assemblies.

2.3.6 Spacecraft Simulator

The spacecraft simulator will:

1) Provide means of checking out LCE and MDE electrically, at either the launch pad service tower or the blockhouse.
2) Provide means of end-to-end system level checkout of STC.
3) Provide connections whereby flight capsule simulator and science payload units (GFE) can be quickly and easily changed.
4) Provide connections whereby telecommunications simulator can be quickly and easily removed from the Planetary Vehicle simulator and used separately to checkout the DSIF.

5) Provide means for simulation of condition requiring commands from the LCE.

6) Be designed for use in a sheltered and conditional environment (clean room or laboratory).

Appropriate safety circuits, interlocks, and similar devices will be incorporated to ensure fail-safe operation.

2.3.7 Trend Date Equipment (Software)

The trend data equipment is the functional element of the Voyager OSE which gathers the data and performs the analysis required to assure that the Planetary Vehicle is free from defects and that performance degradations will not prevent accomplishment of mission objectives.

The functions which are to be accomplished by the trend data equipment are:

1) Collecting all trend significant data;

2) Accumulating the trend data in a data storage and retrieval system which permits fast callup of trend historical data;

3) Analyzing trend parameters in such a way that high confidence can be had in the predicted success of the Voyager mission.

4) Presenting trend analysis results in a timely manner.

2.3.8 Magnetic Mapping Equipment

The magnetic mapping equipment is that equipment used in conjunction with the neutralized field mapping facilities to measure the permanent

and induced fields of the Planetary Vehicle, flight spacecraft, spacecraft bus, and its subsystems.

Magnetic mapping requires equipment to rotate the spacecraft (and subassemblies) around three mutually orthogonal axes without perturbing the magnetic field.

- The equipment will be capable of measuring magnetic fields with resolution greater than 1 gamma while in an external field of 100 gamma.
- A means will be provided to record and plot the magnetic field as a function of angular position for angular displacements of 360° around three mutually orthogonal axes.

3-2
3-79 block diag.
3-90

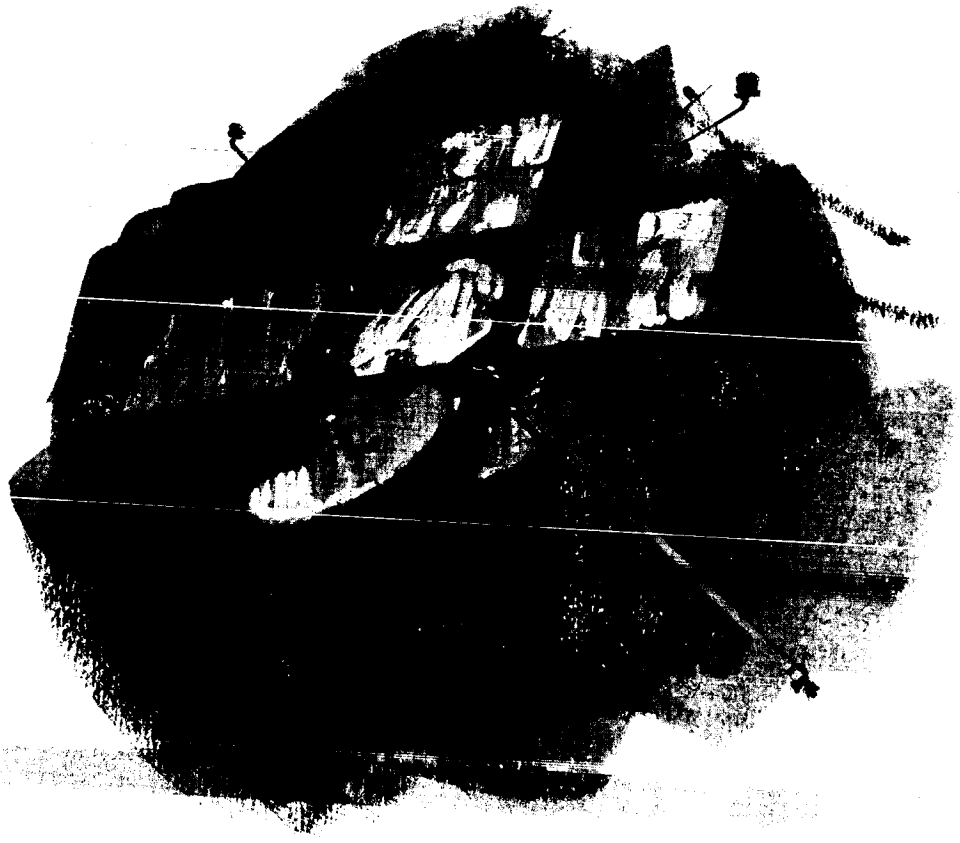

CONTENTS

3.0 SYSTEM LEVEL OSE FUNCTIONAL DESCRIPTIONS

3.1 Mission Dependent Equipment

3.1.1 Functional Description

3.1.2 Hardware Description

3.1.3 Software—DSIF

3.1.4 Hardware—SFOF

3.1.5 Software—SFOF

3.2 Launch-Complex-Equipment Functional Description

3.2.1 Equipment Identification and Usage

3.2.2 LCE Design Criteria Parameters and Function Definition

3.2.3 LCE Functional Descriptions

3.3 System Test Complex

3.3.1 Equipment Identification and Usage

3.3.2 Design Concepts and Constraints

3.3.3 Applicable Documentation

3.3.4 Functional Description

3.3.5 Interface Definition

3.3.6 Safety Considerations

3.3.7 Testing

3.4 Assembly, Handling, and Shipping Equipment (AHSE) — System Level

3.4.1 Scope

3.4.2 AHSE Classes

3.4.3 Functions Performed

3.4.4 AHSE Critical Parameters

3.4.5 Equipment Functions and Proposed Design

3.5 Spacecraft Simulator

3.5.1 Equipment Identification and Usage

3.5.2 Functional Description

3.5.3 Interface Definition

3.5.4 Performance Parameters

3.5.5 Physical Characteristics

3.5.6 Safety Considerations

3.6 Special System-Level OSE—Functional Descriptions

3.6.1 Trend-Data Equipment

3.6.2 Magnetic Mapping of OSE

3.7 Equipment List

3.0 SYSTEM LEVEL OSE FUNCTIONAL DESCRIPTIONS

This section provides functional descriptions for that OSE which has the primary purpose of supporting the spacecraft system, including the Spacecraft Bus, the Flight Spacecraft and the Planetary Vehicle. An OSE system level equipment list is included as a part of this section.

3.1 MISSION DEPENDENT EQUIPMENT

The MDE includes all items of hardware and software to be used in the DSN that are unique to the Voyager program. Specifically, this includes the hardware required to (1) buffer T/M data into the data processing systems at both the DSIF and SFOF; (2) provide for predetection recording of all T/M data; and (3) insert command words into the DSIF modulator. It also includes operational software programs for processing command, telemetry, and scientific data at the DSIF and SFOF; and the analytical software to accomplish flight-path analysis, space science analysis, and spacecraft performance analysis. For the operations concept of this equipment, broken down to hardware and software at the DSIF and SFOF, see Section 2.4.1.1.

3.1.1 Functional Description

The following discussion describes the hardware and software required to demodulate, decommutate, and process the telemetry data from one spacecraft with the realization that this capability must be provided for--at most--two spacecraft and one capsule. The equipment described is typical of that which must be provided for both spacecraft and the capsule.

The system for handling command and telemetry data provides optional operational modes compatible with data display and analysis requirements for each phase of the mission. It supports decision-making at the SFOF. It also provides coordinated backup telemetry-processing capabilities at DSIF when required due to data link failure or other SFOF equipment

failures and compatibility with control, data formats, and transfer characteristics of the Voyager, DSIF and SFOF ground equipment.

These functions are performed by the command and telemetry equipment located at the SFOF and the DSIF. A block diagram of the SFOF command and telemetry equipment is shown in Figure 3.1-1. The diagram is divided according to the function performed by the equipment. The central computing complex consists of the IBM 7040/7044 computer, the IBM 7094 computer, and all periphery equipment. This equipment edits, decommutates, displays, and stores T/M data, and processes commands to the DSIF. The computer complex also includes equipment which supports flight-path analysis, spacecraft performance analysis, and science payload analysis. The telemetry processing station contains input data recording and formatting equipment and the simulator facility used to test the central computing complex. The communications center consists of all MIE which supports the teletype and high-speed data links between the SFOF and the DSIF.

Figure 3.1-2 is a block diagram of the command and telemetry-data processing system at the DSIF. Communication with the spacecraft is through the MDE transfer panel to the DSIF receiver/transmitter. The command and telemetry equipment consists of T/M data-stream processing equipment, the command processor, the SDS 920 computer with its associated equipment, and real-time display equipment. Figures 3.1-3 and 3.1-4 are the DSIF/SFOF telemetry-data flow and command-data flow diagrams, respectively. They indicate the buffers, tapes, and computer programs required to perform these functions.

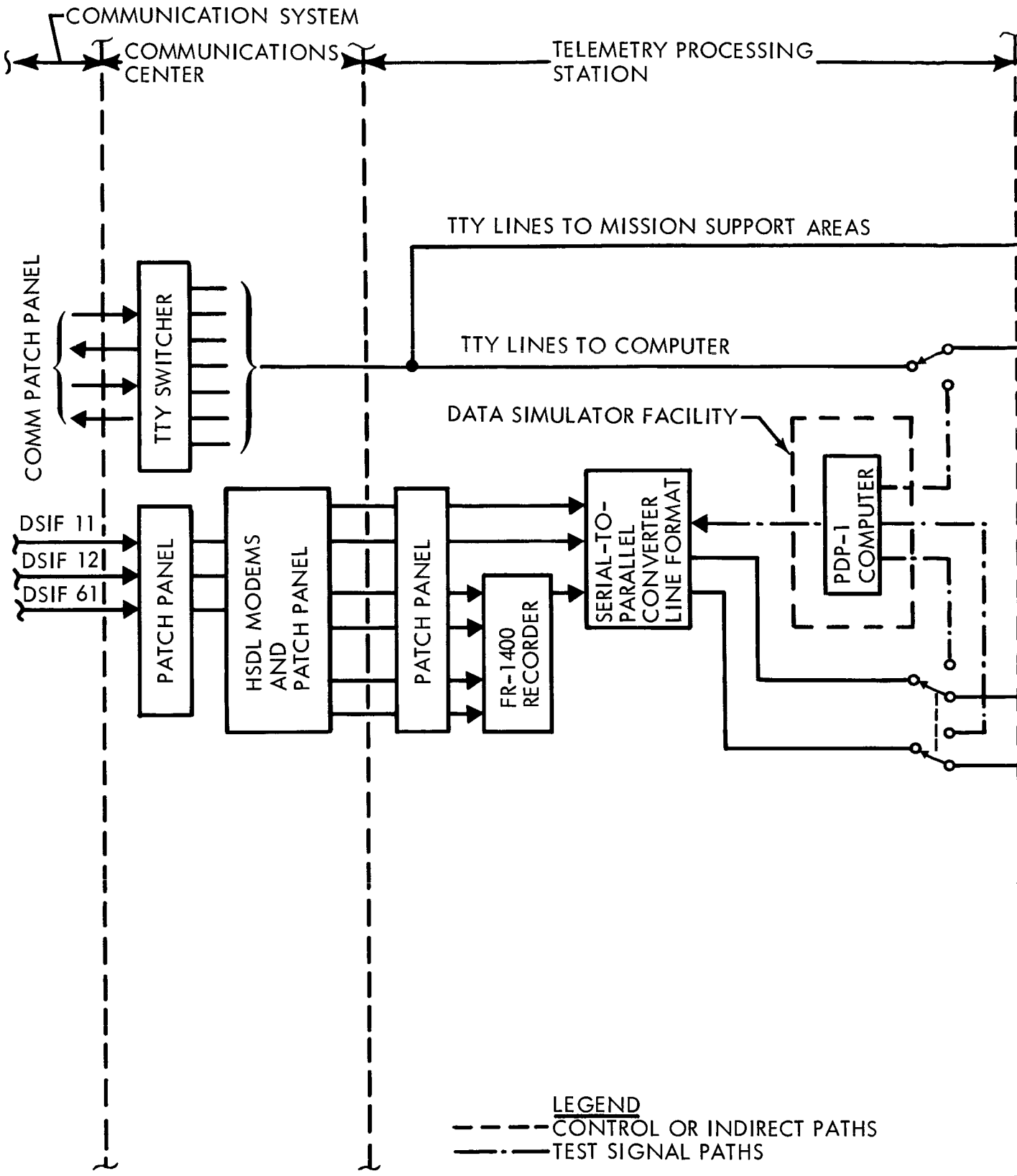
COMMUNICATION SYSTEM
COMMUNICATIONS CENTER
TELEMETRY PROCESSING STATION
TTY LINES TO MISSION SUPPORT AREAS
COMM PATCH PANEL
TTY SWITCHER
TTY LINES TO COMPUTER
DATA SIMULATOR FACILITY
DSIF 11
DSIF 12
DSIF 61
PATCH PANEL
HSDL MODEMS AND PATCH PANEL
PATCH PANEL
FR-1400 RECORDER
SERIAL-TO-PARALLEL CONVERTER LINE FORMAT
PDP-1 COMPUTER
LEGEND
CONTROL OR INDIRECT PATHS
TEST SIGNAL PATHS
MISSION DEPENDENT EQUIPMENT

1 3-5

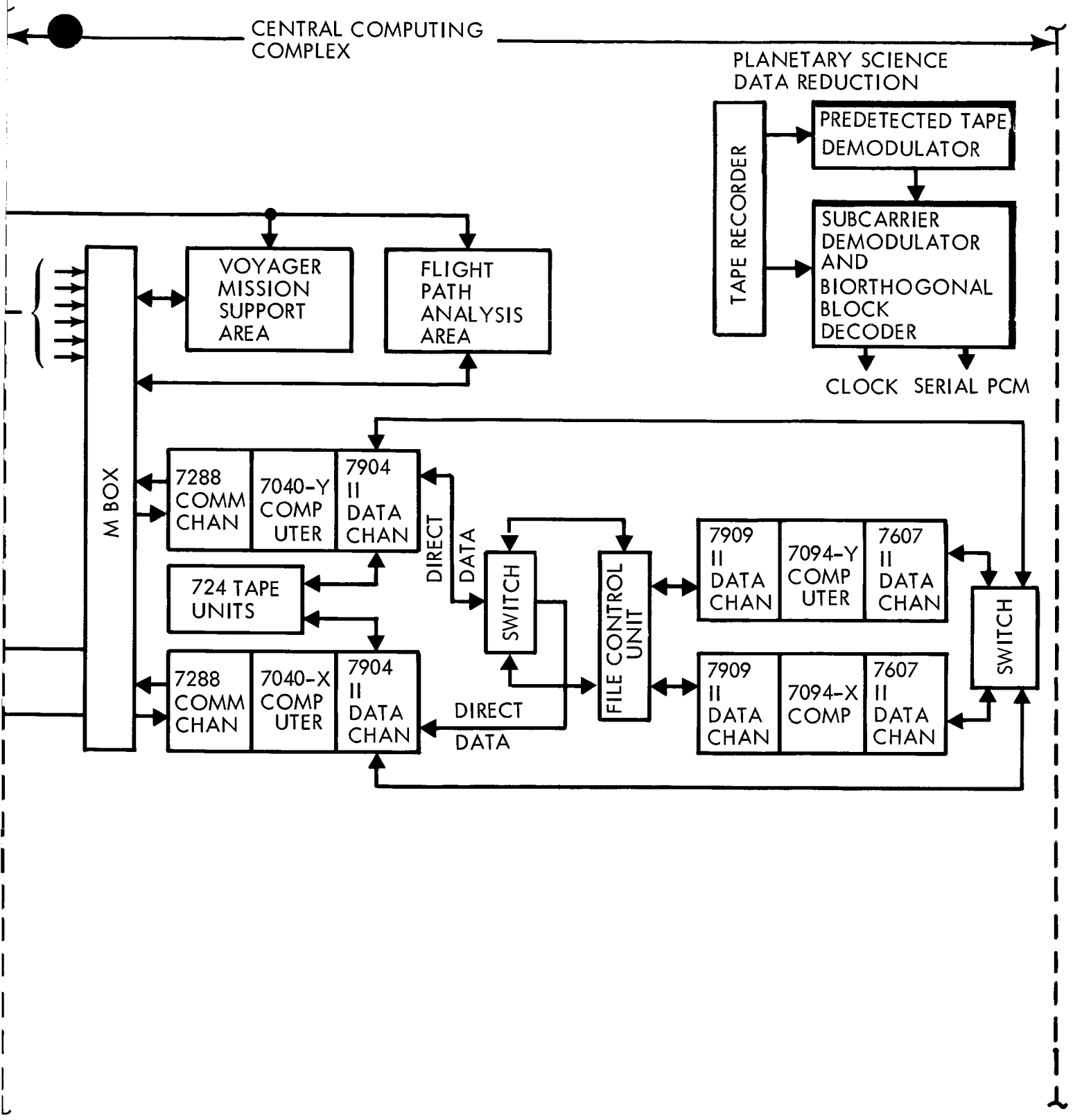

Figure 3.1.1: SFOF Telemetry & Command Equipment

2

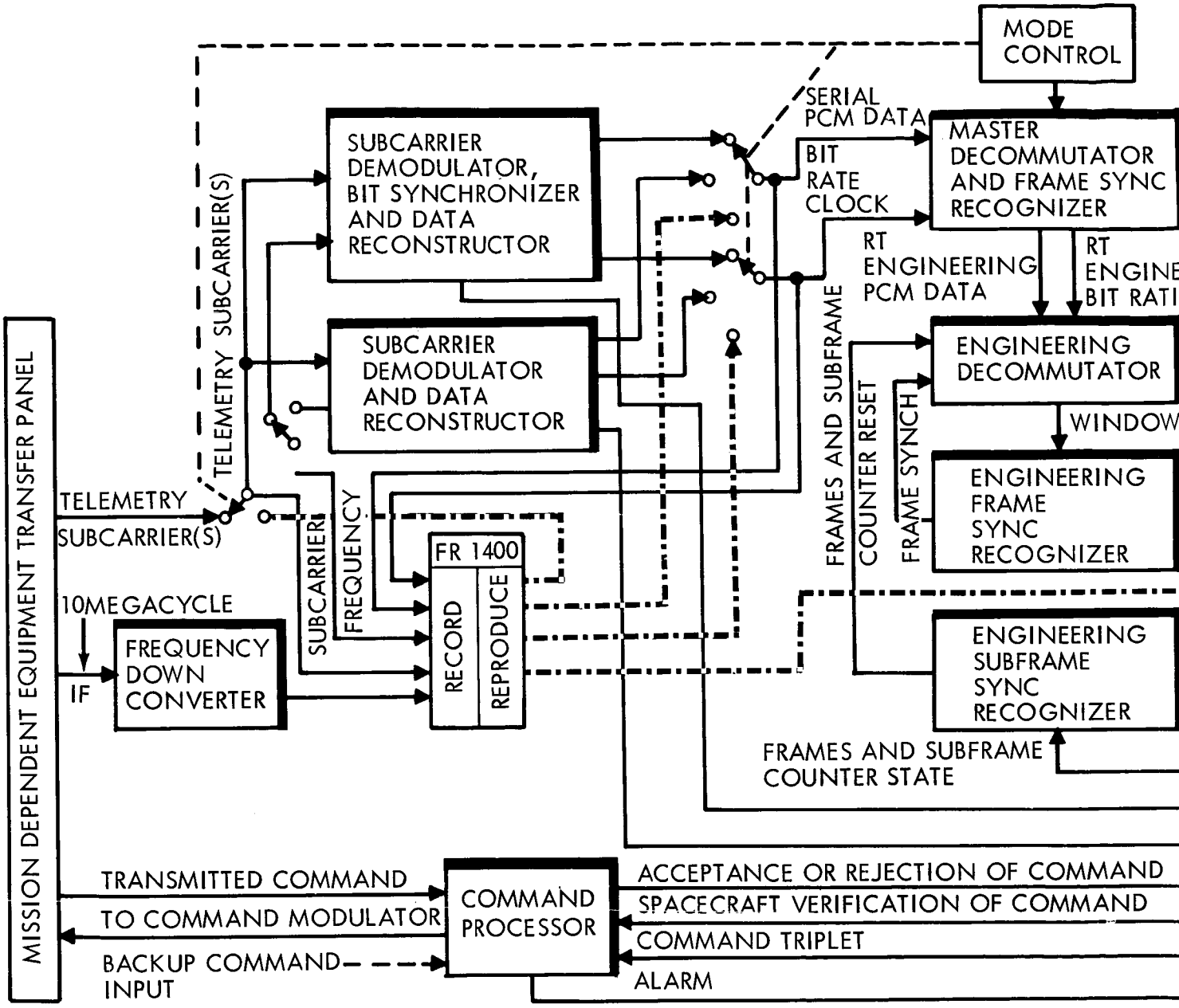
MODE CONTROL
SERIAL PCM DATA
SUBCARRIER DEMODULATOR, BIT SYNCHRONIZER AND DATA RECONSTRUCTOR
BIT RATE CLOCK
MASTER DECOMMUTATOR AND FRAME SYNC RECOGNIZER
RT ENGINEERING PCM DATA
RT ENGINE
BIT RATI
TELEMETRY SUBCARRIER(S)
SUBCARRIER DEMODULATOR AND DATA RECONSTRUCTOR
ENGINEERING DECOMMUTATOR
WINDOW
MISSION DEPENDENT EQUIPMENT TRANSFER PANEL
TELEMETRY SUBCARRIER(S)
FRAMES AND SUBFRAME COUNTER RESET
FRAME SYNCH
ENGINEERING FRAME SYNC RECOGNIZER
SUBCARRIER
FREQUENCY
FR 1400
RECORD
REPRODUCE
10MEGACYCLE
IF
FREQUENCY DOWN CONVERTER
ENGINEERING SUBFRAME SYNC RECOGNIZER
FRAMES AND SUBFRAME COUNTER STATE
TRANSMITTED COMMAND
TO COMMAND MODULATOR
BACKUP COMMAND INPUT
COMMAND PROCESSOR
ACCEPTANCE OR REJECTION OF COMMAND
SPACECRAFT VERIFICATION OF COMMAND
COMMAND TRIPLET
ALARM

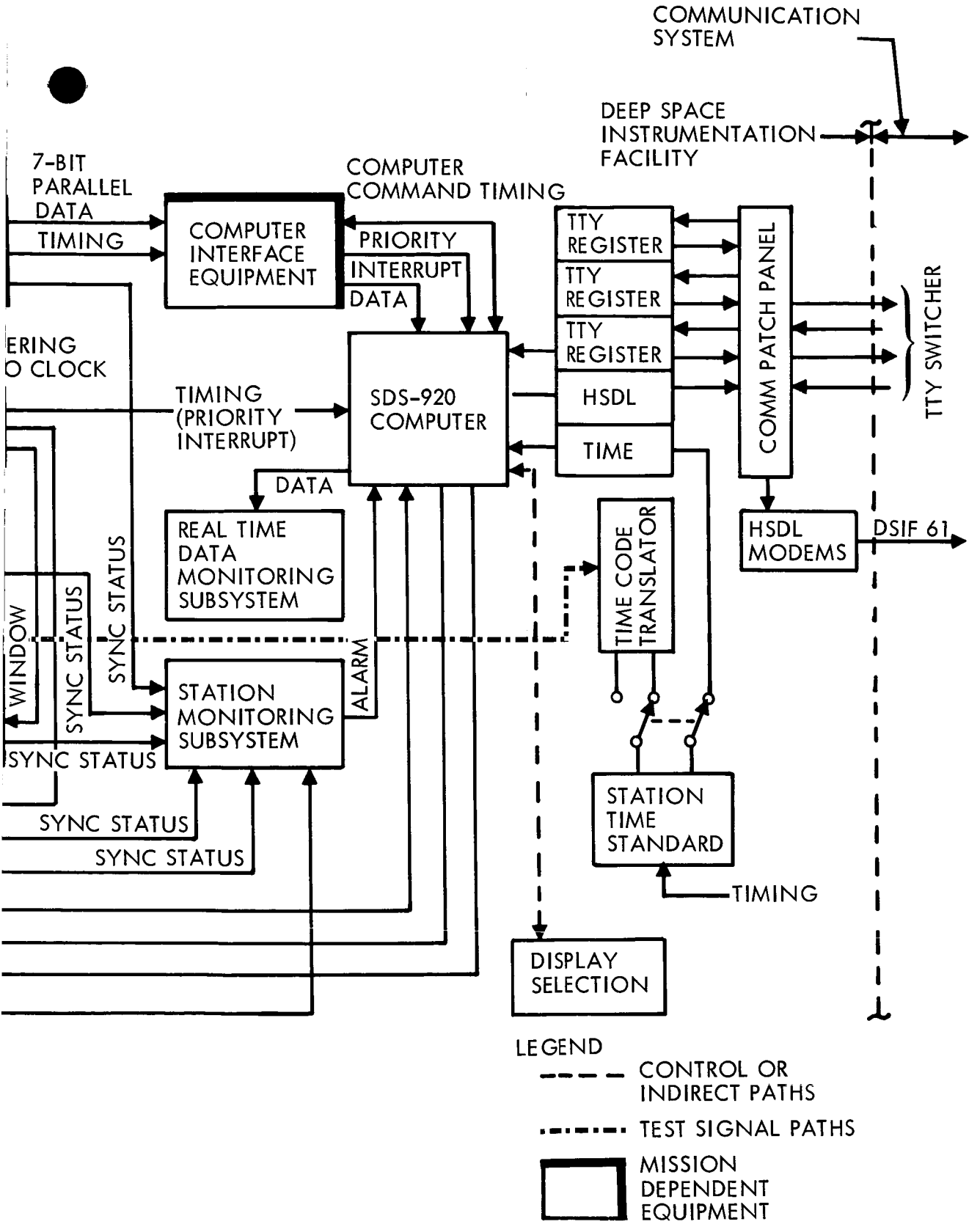

Figure 3.1-2: DSIF Telemetry and Command Equipment Block Diagram

SDS 920 TELEMETRY PROCESSING

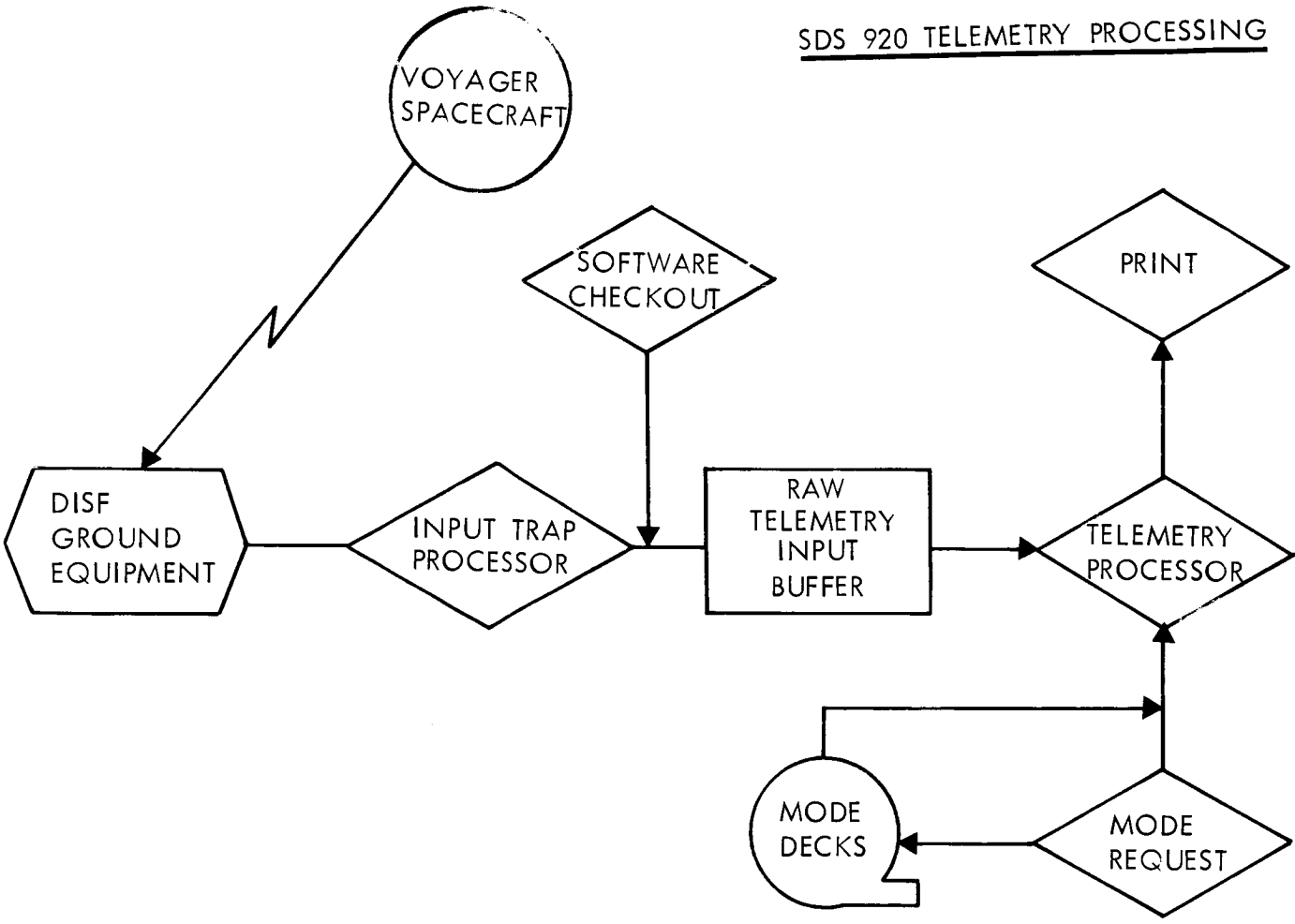

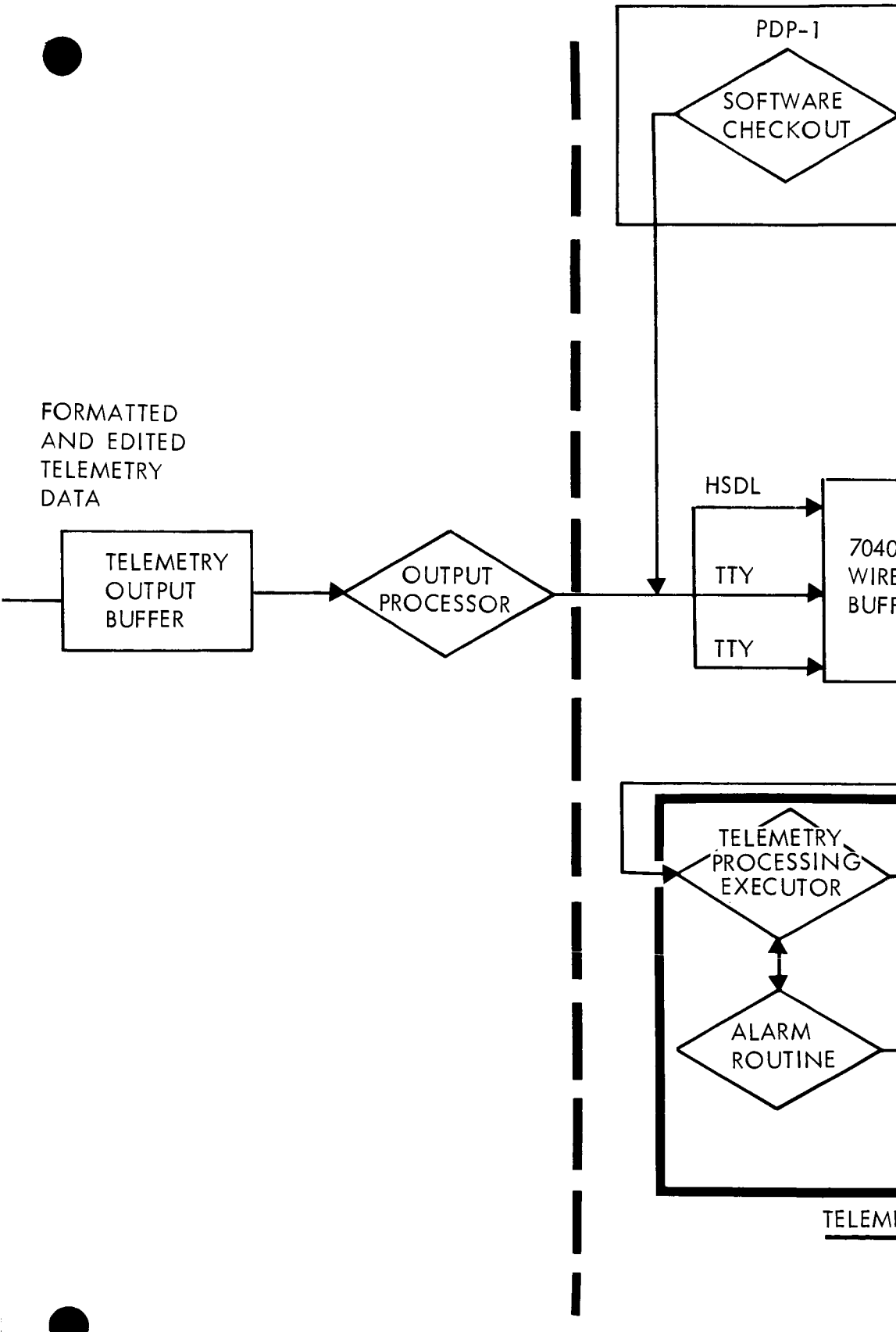
PDP-1
SOFTWARE CHECKOUT
FORMATTED AND EDITED TELEMETRY DATA
TELEMETRY OUTPUT BUFFER
OUTPUT PROCESSOR
HSDL
TTY
TTY
7040
WIRE
BUFF
TELEMETRY PROCESSING EXECUTOR
ALARM ROUTINE
TELEM

7040 TELEMETRY PROCESSING

INPUT PROCESSOR

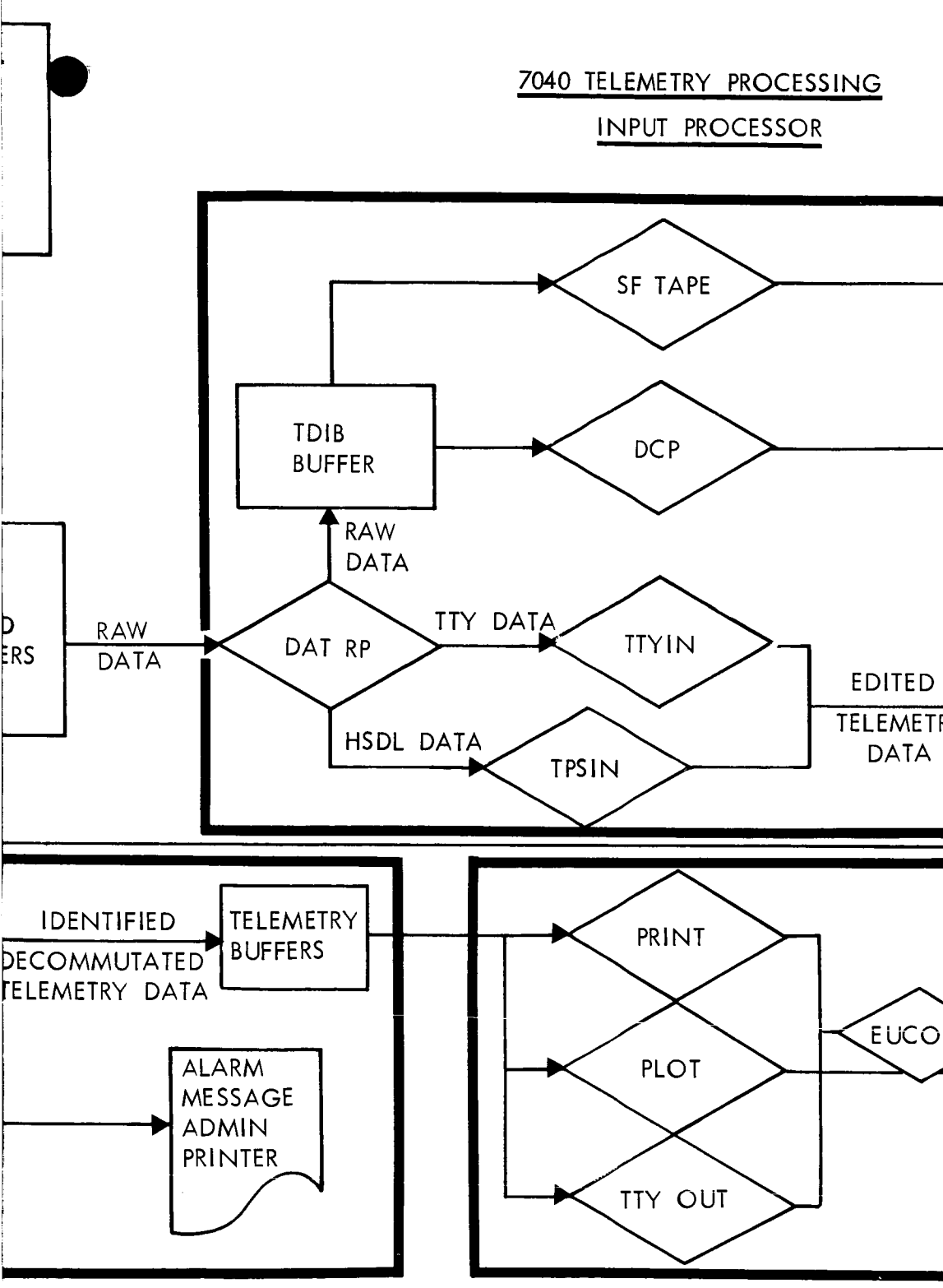

TRY PROCESSOR

OUTPUT PROCESSO

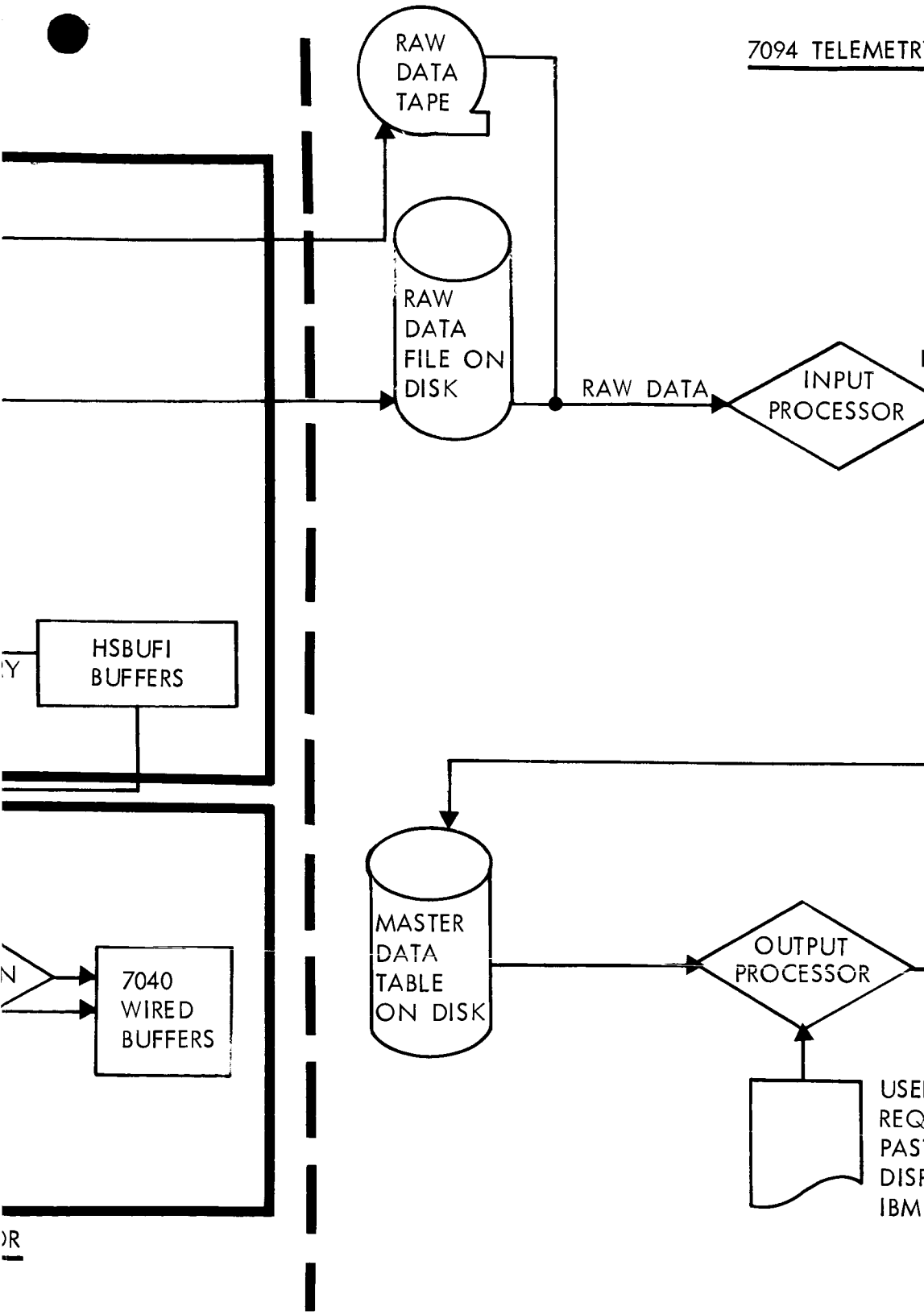
7094 TELEMETR
RAW DATA TAPE
RAW DATA FILE ON DISK
RAW DATA
INPUT PROCESSOR
HSBUFI BUFFERS
7040 WIRED BUFFERS
MASTER DATA TABLE ON DISK
OUTPUT PROCESSOR

Fig

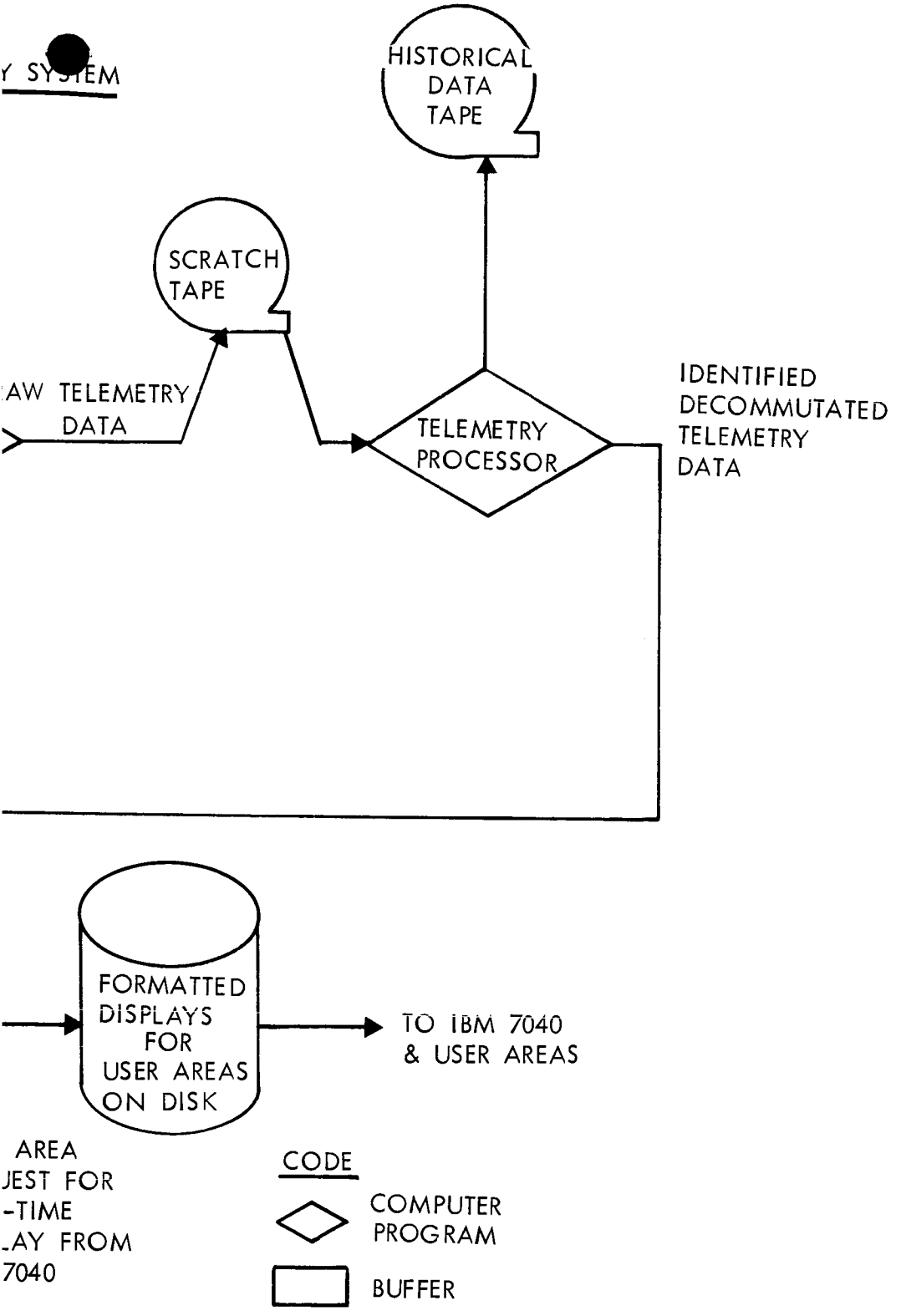

re 3.1-3: DSIF/SFOF Telemetry Data Flow

5

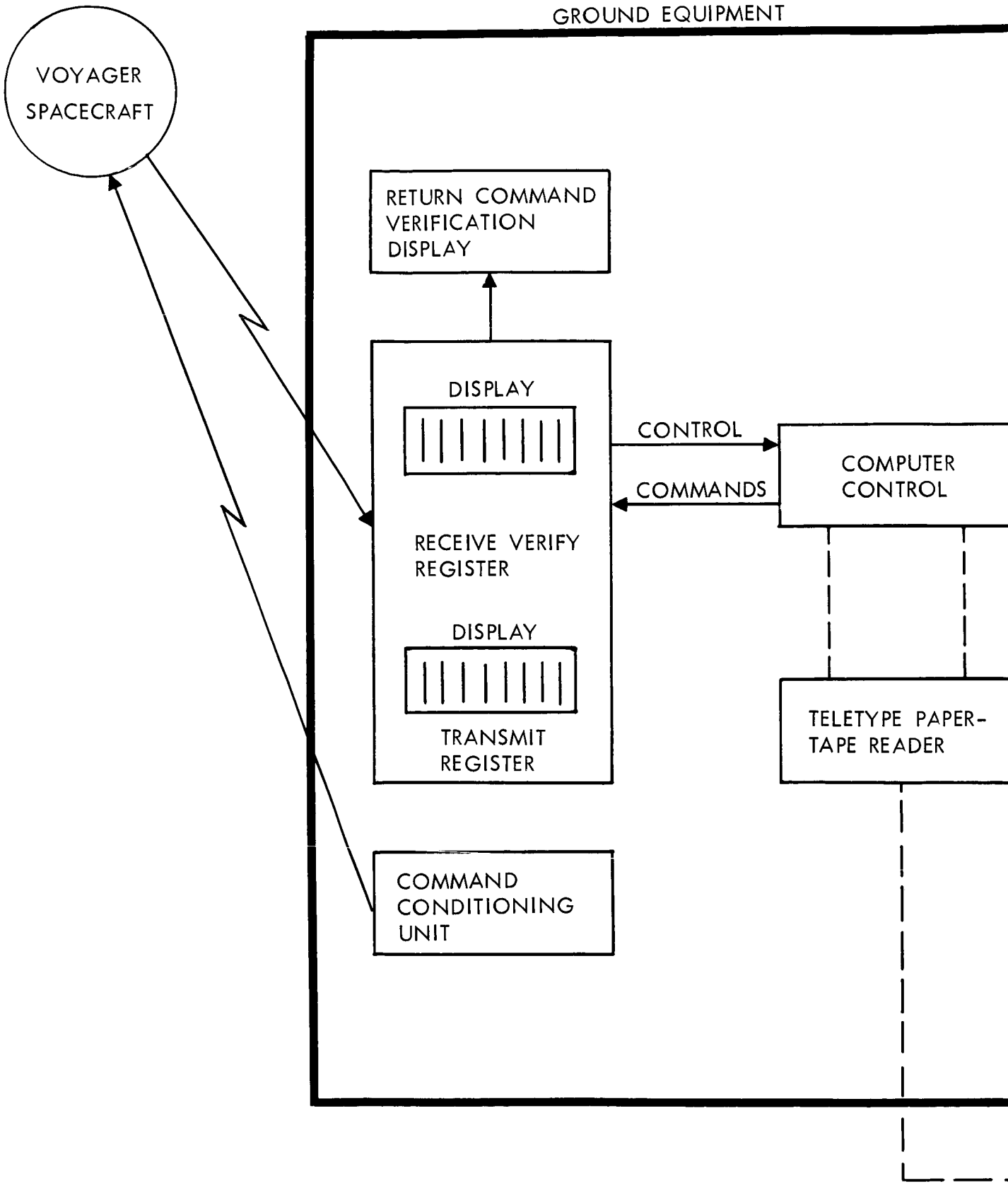
GROUND EQUIPMENT
VOYAGER SPACECRAFT
RETURN COMMAND VERIFICATION DISPLAY
DISPLAY
CONTROL
COMMANDS
COMPUTER CONTROL
RECEIVE VERIFY REGISTER
DISPLAY
TRANSMIT REGISTER
TELETYPE PAPER-TAPE READER
COMMAND CONDITIONING UNIT

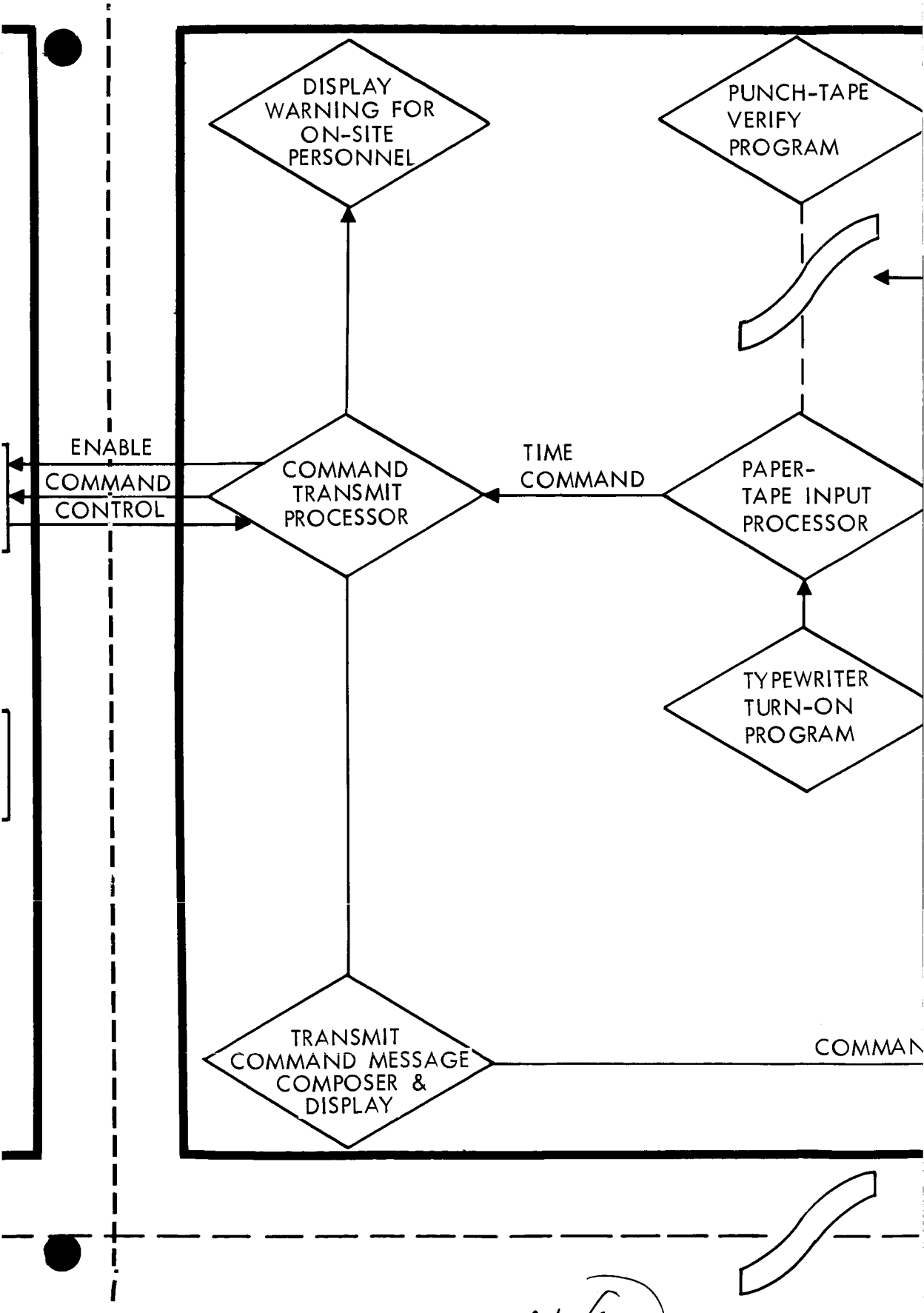
DISPLAY WARNING FOR ON-SITE PERSONNEL
PUNCH-TAPE VERIFY PROGRAM
ENABLE
COMMAND
CONTROL
COMMAND TRANSMIT PROCESSOR
TIME COMMAND
PAPER-TAPE INPUT PROCESSOR
TYPEWRITER TURN-ON PROGRAM
TRANSMIT COMMAND MESSAGE COMPOSER & DISPLAY
COMMAN

11 (e)

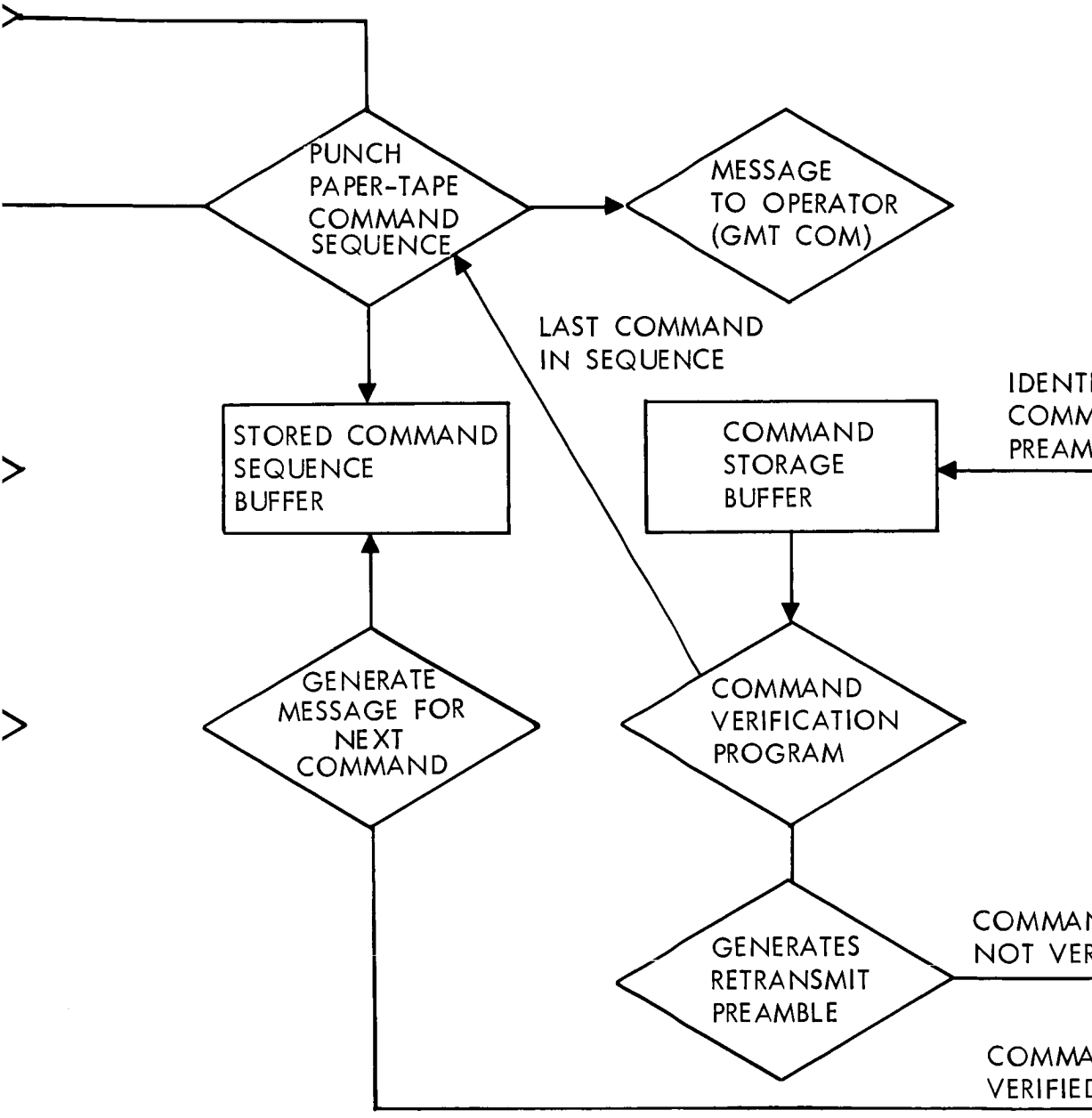
PUNCH PAPER-TAPE COMMAND SEQUENCE
MESSAGE TO OPERATOR (GMT COM)
LAST COMMAND IN SEQUENCE
STORED COMMAND SEQUENCE BUFFER
COMMAND STORAGE BUFFER
GENERATE MESSAGE FOR NEXT COMMAND
COMMAND VERIFICATION PROGRAM
GENERATES RETRANSMIT PREAMBLE

D RECEIVED

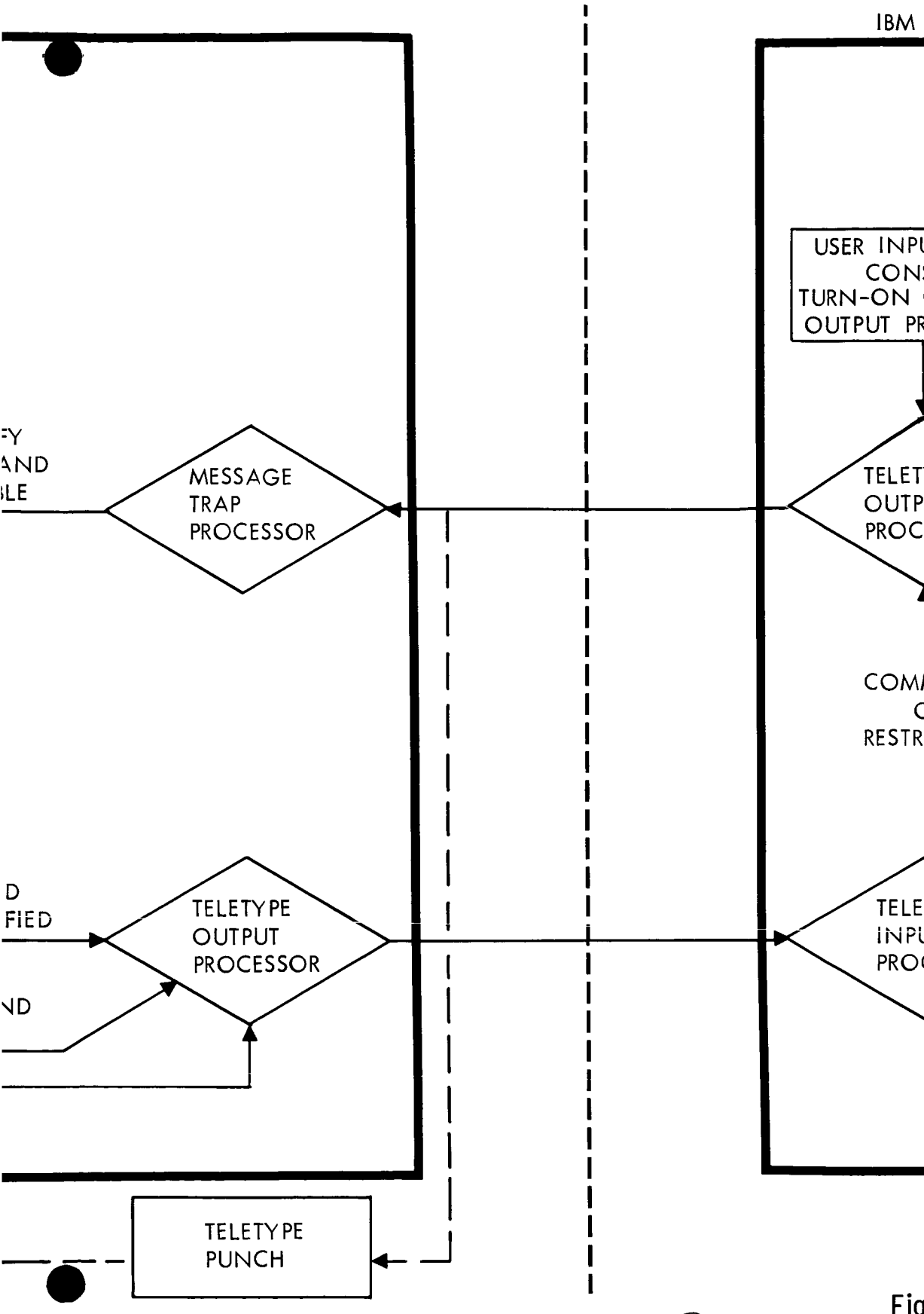
IBM
USER INPU
CONS
TURN-ON
OUTPUT PR
FY
AND
LE
MESSAGE
TRAP
PROCESSOR
TELET
OUTP
PROC
COMM
C
RESTR
D
FIED
TELETYPE
OUTPUT
PROCESSOR
ND
TELE
INPU
PROC
TELETYPE
PUNCH

Fig

11 (4)

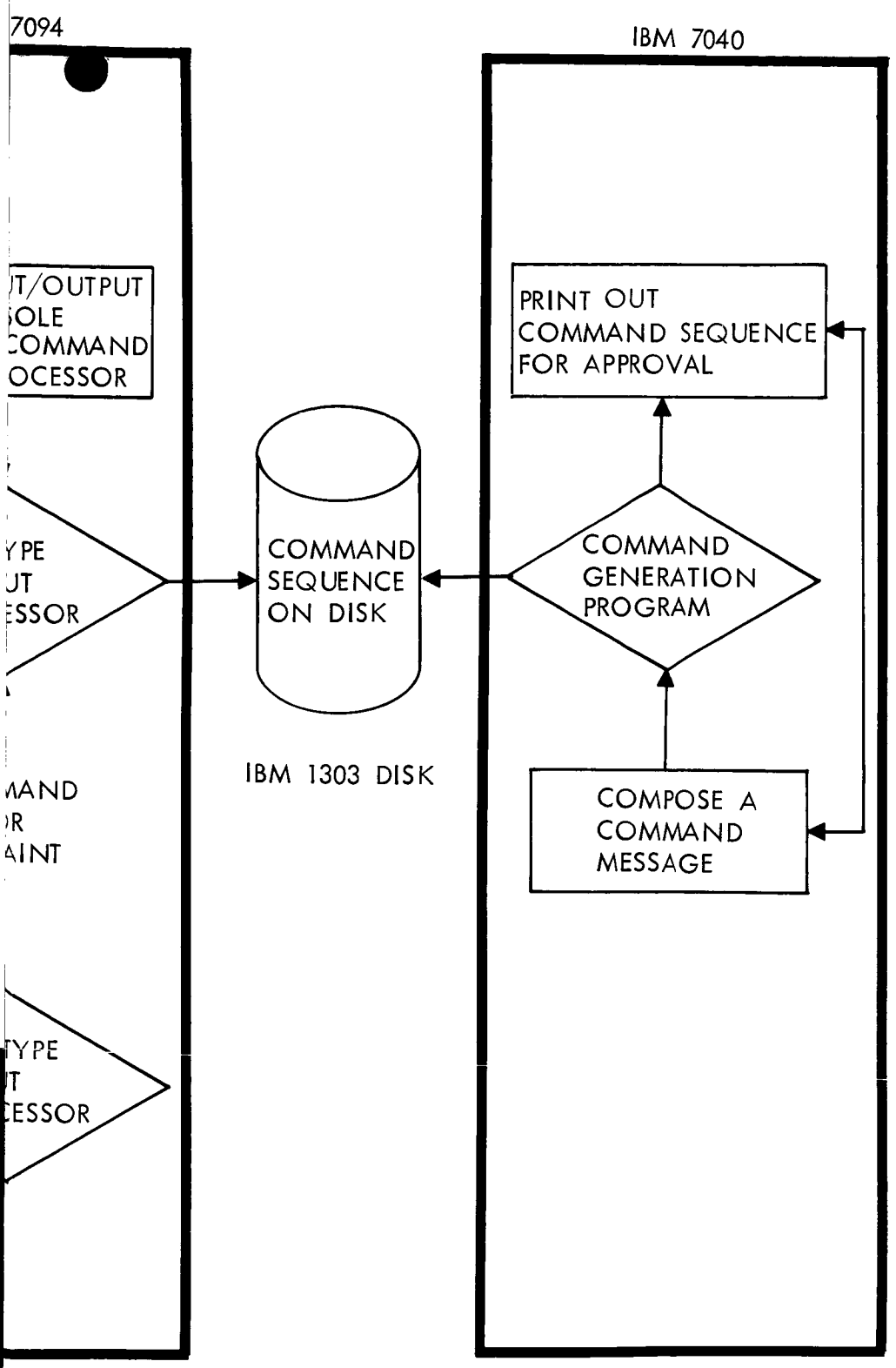

ure 3.1-4: DSIF/SFOF Command Data Flow

3.1.2 Hardware Descriptions

The hardware items shown in Figure 3.1-2 are described in the following paragraphs.

3.1.2.1 Deep Space Instrumentation Facility

For engineering and cruise-science data two modulation techniques are used. For low bit rates below 25 bps (modes 1 and 4), dual biphase-modulated subcarriers are employed. For high bit rates above 25 bps (Modes 2, 3, 5 and 6), a single biphase-modulated subcarrier is used. This requires two functionally-different subcarrier demodulators, bit synchronizers, and data reconstructors.

3.1.2.2 High Bit Rate Subcarrier Demodulator, Bit Synchronizer and Data Reconstructor

This unit is used to recover a serial PCM-bit train and bit-rate clock from the biphase-modulated low-frequency telemetry subcarrier signals as received from the DSIF receiver subsystem or from the output of the pre-detected tape demodulator at the SFOF. It performs the specific functions of subcarrier demodulation, bit synchronization and data reconstruction as shown in Figure 3.1-5. The input signal is amplitude-normalized by the input buffer and then routed into the subcarrier regenerator. The subcarrier regenerator performs a nonlinear operation on the telemetry subcarrier signal to generate a discrete spectrum from which the subcarrier is recovered. Recovery is accomplished by locking a phase-lock loop to the correct spectral line.

The regenerated subcarrier is shifted 90° and used to coherently demodulate the subcarrier signal. The demodulated subcarrier signal is applied to the bit synchronizer to generate a bit-rate clock. This clock is then used to synchronously detect the demodulated subcarrier in an integrate-

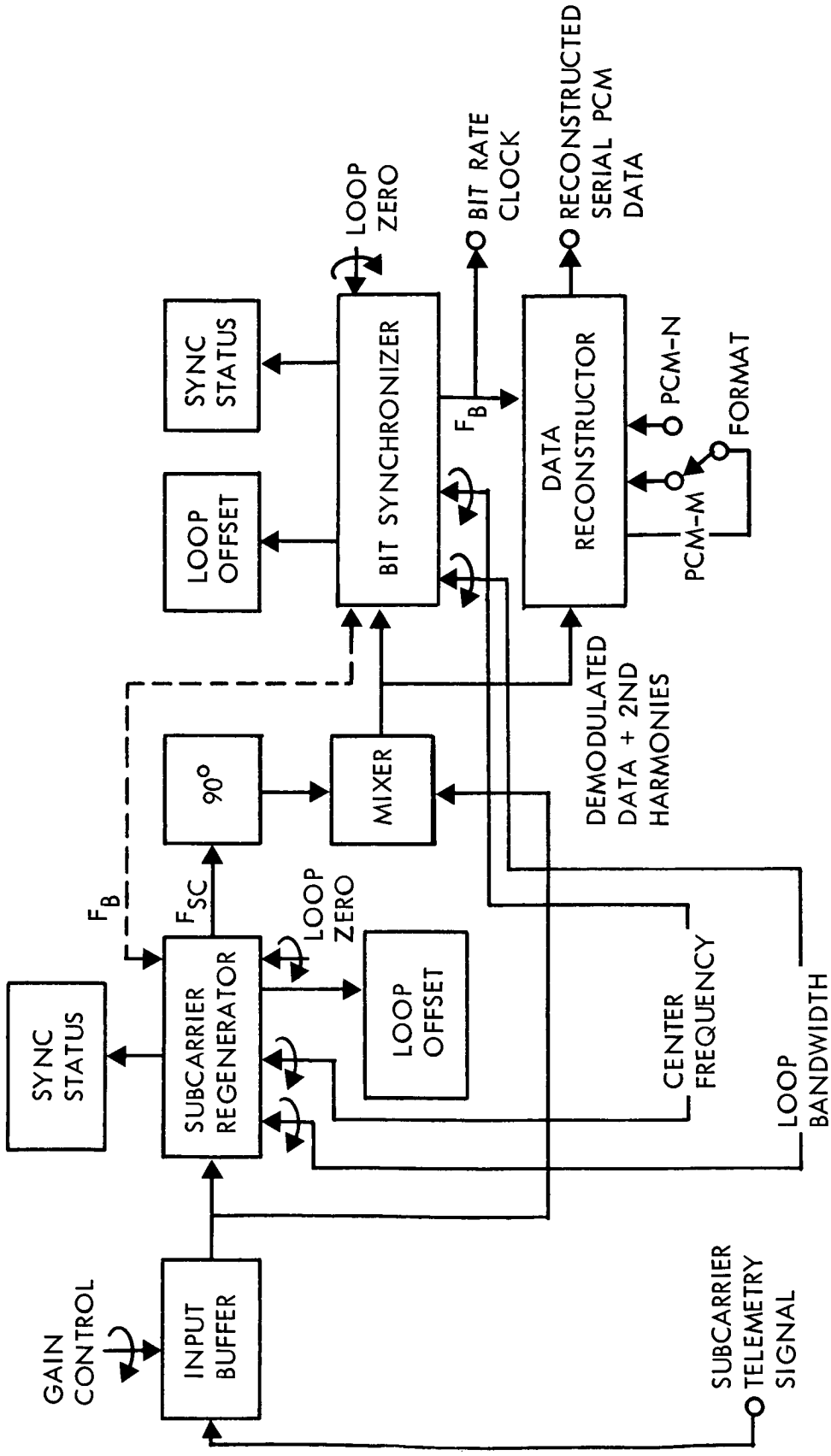

Figure 3.1-5: High/Low Subcarrier Demodulator, Bit Synchronizer, and Data Reconstructor

and-dump network in the data reconstructor. If a NRZ-M modulation format is used, then the reconstructed NRZ-M signal is passed through a format converter to generate NRZ-N. If a NRZ-N modulation format is used, then the phase-ambiguity of the output data must be corrected in later processing.

3.1.2.3 Subcarrier Demodulator and Data Reconstructor

This unit recovers a serial PCM-data train and bit-rate clock from the dual-channel PN-coded telemetry subcarriers. A functional block diagram is shown in Figure 3.1-6. The input telemetry signal to the unit consists of two subcarriers, the lower subcarrier being a pseudo-noise-coded synchronization signal and the upper a biphase-modulated data signal. The data subcarrier is twice the sync subcarrier frequency, 2fx, and is phase coherent with it. This allows the sync subcarrier to be used to coherently detect the data. Operation of the sync channel is as follows: The input to the sync channel is PN $\oplus$ 2fs where PN is a 63-bit pseudo-noise code and $\oplus$ is module two addition. This is multiplied by PN $\oplus$ fs and filtered to form a cross correlation function with only one stable lock point. Thus a phase-locked loop can be locked to this point establishing a stable synchronization signal. Details concerning the cross-correlation-function sync subcarrier spectrum, generation of the PN code and bit sync can be found in the referenced document, JPL-TR32-495. Sync status (loop lock) information is generated by taking the auto-correlation function of the input, PN $\oplus$ 2fs. When lock is achieved, the correlator will give a maximum output which is averaged over many cycles and then drives a sync indicator. Data is detected by multiplying the filtered-data subcarrier by the 4 fs signal derived in the sync loop. It is then passed through a

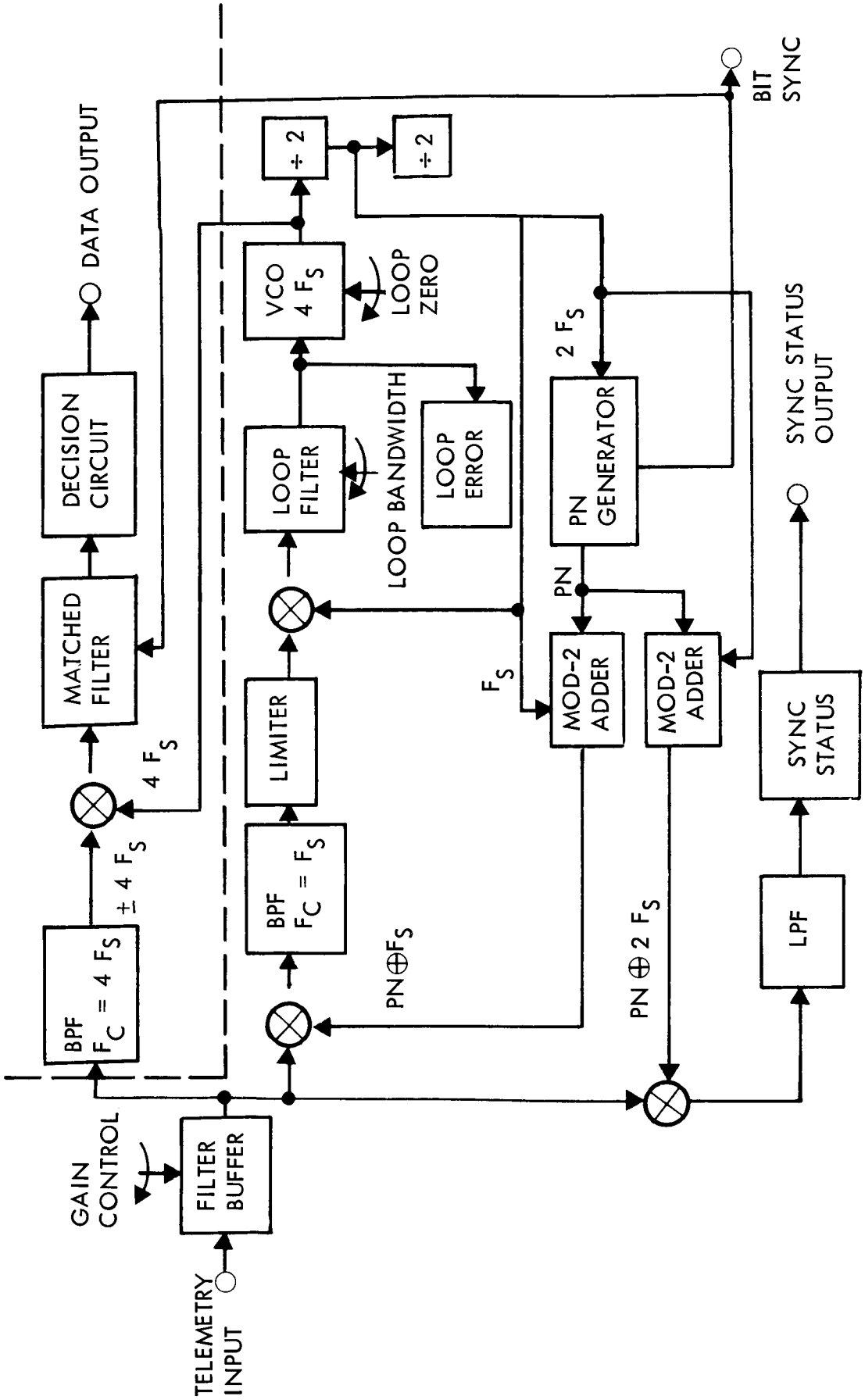

Figure 3.1-6: Subcarrier Demodulator And Data Reconstructor

matched filter (integrate-and-dump network) and decision network that used the bit sync signal reconstructed in the sync loop. The output of the decision network is a regenerated serial PCM wavetrain.

3.1.2.4 Master Decommutator and Frame Synchronizer

The purpose of this unit is to recover frame synchronization and generate timing formats for all spacecraft telemetry modes. It furnishes the computer interface equipment with the timing signals required to enter telemetry data into the SDS 920 computer as well as reconstruct the serial real-time engineering-data format. A functional block diagram of this unit is shown in Figure 3.1-7. The frame-sync recognizer synchronizes to the master frame-sync word and generates a frame-sync signal which resets the bit-per-word and word-per-frame counters in the decommutator section. In turn, these counters generate an anticipatory timing signal for window generation in the frame synchronizer. The only function performed by the decommutator section is the generation of format timing signals identical in structure and phase to the spacecraft master frame format. These timing signals are used to generate waveforms which perform or allow the following functions:

1) Timing signals to transfer data words and frame-sync information into the computer interface equipment;
2) Transfer parallel real time engineering words into the 14-bit shift register;
3) Divides the bit-rate clock pulse for generation of the real-time engineering bit-rate clock output. This output is also used to clock the real-time engineering data out of the 14-bit shift register.

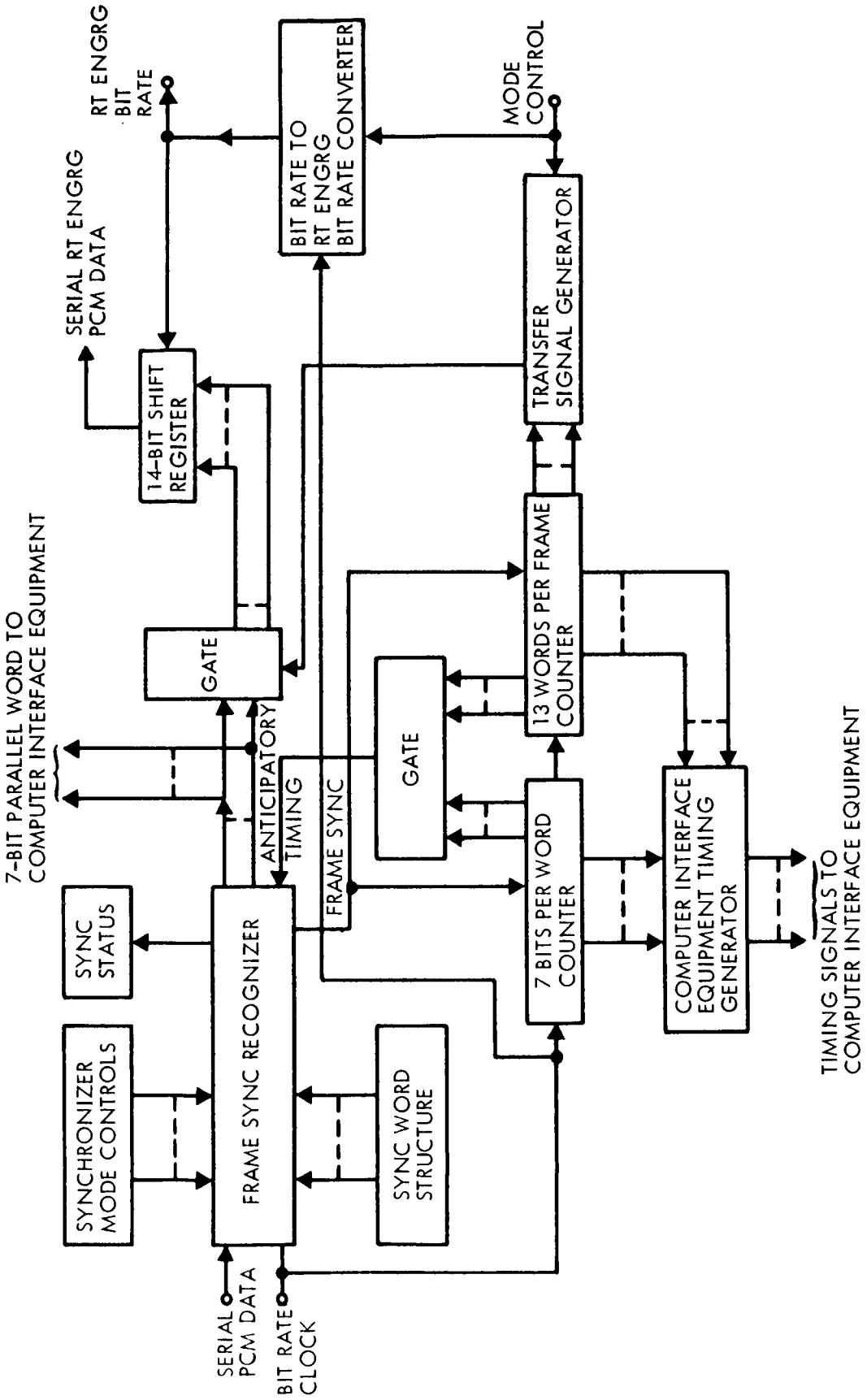

Figure 3.1-7: Master Decommutator and Frame Sync Recognizer

The above functions could be accomplished either through hardware or software implementation. The hardware approach was chosen upon evaluation of the following factors:

1) The frame-synchronization function is primarily one of timing and analog correlation. Both these functions are more easily performed in hardware than in the SDS 920 computer. Also, the frame-sync recognizer can be purchased as an off-the-shelf function.

2) The decommutation and related functions are primarily those of generating timing signals. Again, these are more easily performed in hardware than in the SDS 920 computer. The required hardware to perform these functions is minimal.

3) The SDS 920 computer must be capable of handling telemetry data from two spacecrafts and one capsule simultaneously as well as command transmission and verification from two spacecraft sequentially. If the added burden of timing-generation and frame-synchronization were added, the software requirements would become very complex.

3.1.2.5 Engineering-Data Decommutator

This unit accepts the RT engineering bit-rate clock and frame, subframe, and sub-subframe-sync-recognizer outputs and from these generates a timing format identical with the real-time engineering spacecraft format in structure and phase. Two classes of timing-output waveforms are generated; one, those used to optimize synchronizer operation; and two, those used to identify data words as they are processed into this computer.

A functional block diagram is drawn in Figure 3.1-8. The basic timing structure is formed by a string of controllable-length counters. The bits/word counter generates the word length, the words/frame counter the frame length, and the frames/subframe counter the subframe length. The counters are phased properly by the counter reset signals from the synchronizers. The timing signal generator uses the various counter-states to generate the timing signals shown on the block diagram.

3.1.2.6 Engineering Data-Frame-Sync Recognizer

This unit is to accept a serial real-time engineering-PCM-data train from the master decommutator and frame-sync recognizer or a tape-recorder output. It recognizes a unique frame-synchronization word and generates timing signals required for further processing of the telemetry data. Figure 3.1-9 shows a functional block diagram of the unit. The input PCM bit-train is converted from serial to parallel form so that it can be correlated with the programmed sync-word structure. When the input word agrees within a certain prescribed number of errors with the programmed sync-word structure, a correlation signal is generated. This signal is processed by the search, verify, and lock logic and becomes the output-synchronization signal. The search, verify, and lock logic provides a triple-mode synchronization scheme which is to minimize acquisition time and to maximize the probability of maintaining lock. When the synchronizer is in the verify or lock modes the correlation signal is only identified if it appears during the window. The timing of the window is generated by the decommutation function.

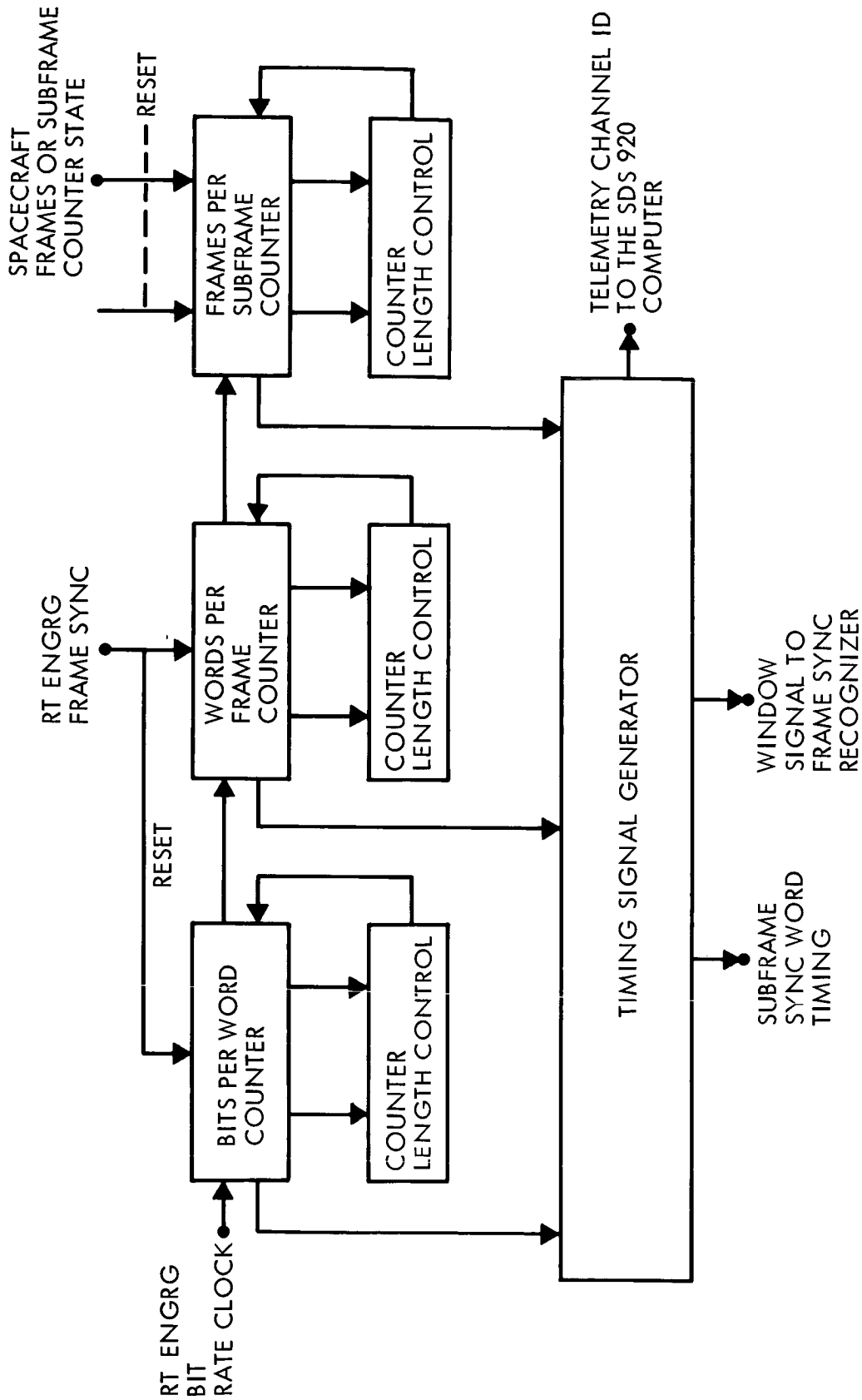

Figure 3.1-8: Real-Time Engineering Decommutator

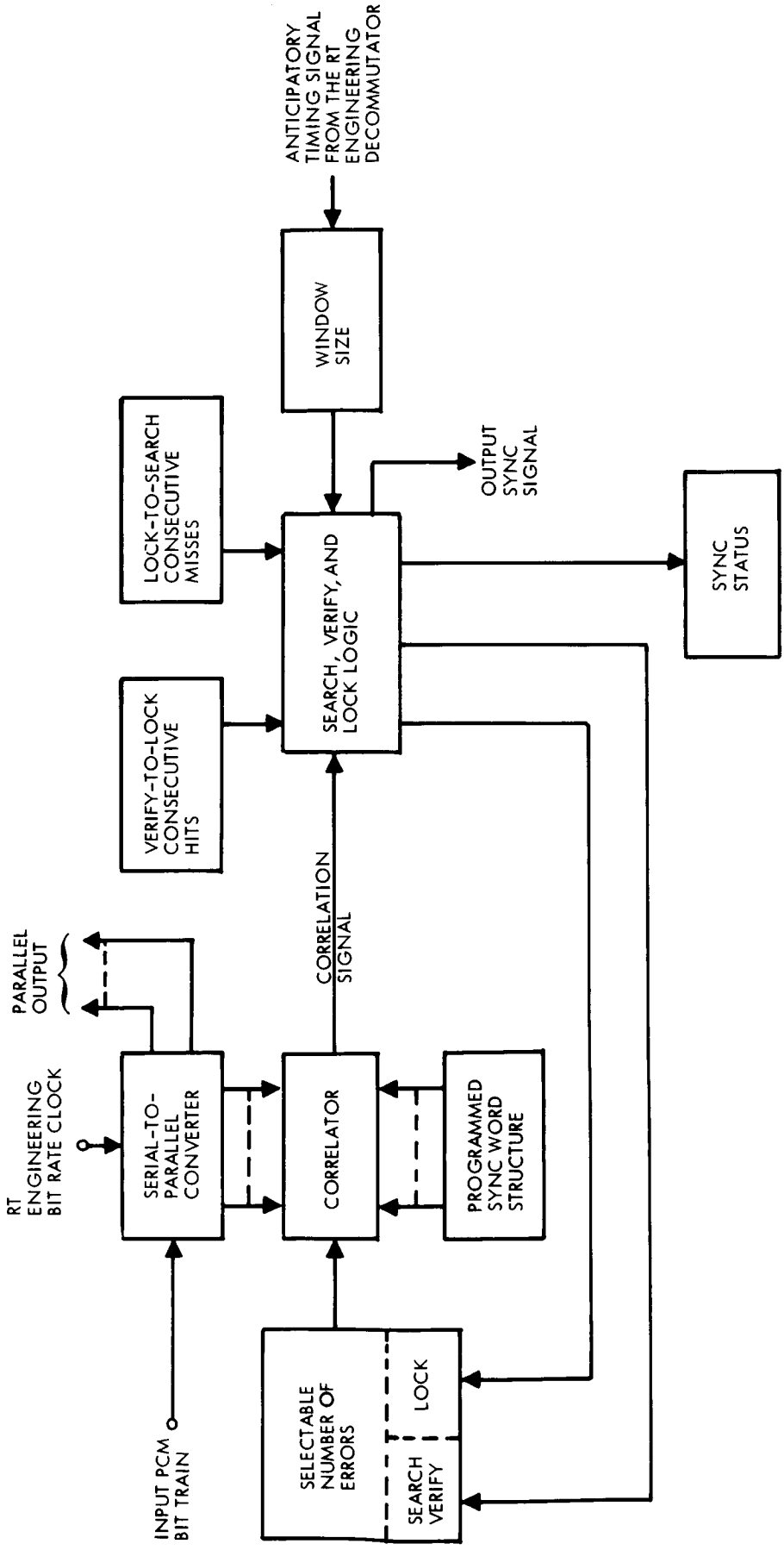

Figure 3.1-9: Real-Time Engineering Frame Sync Recognizer

3.1.2.7 Engineering Data Subframe Sync Recognizer

This unit, shown in Figure 3.1-10, recognizes unique subframe synchronization words derived from the spacecraft frame-counter and generates timing signals required for further processing of the telemetry data.

The 116th-through-119th bits of the engineering-data frame are gated from the frame sync recognizer in parallel into the correlator and compared with the pattern generated by the frame counter state. This 4-bit word is also stored in the input storage register. The use of correlation data and the stored input word is dependent on the mode status of the synchronizer. A triple mode synchronization scheme is used to minimize acquisition time and to maximize the probability of maintaining lock. When the synchronizer is in the search mode the decommutator frames/subframe counter is reset to the spacecraft frames/subframe counter state by a reset signal from the subframe sync recognizer. Once the two counters are in phase and the input word agrees within a certain prescribed number of errors with the generated synchronized word structure, a correlation signal is generated. This switches the synchronizer from the search to the verify mode. If a preselected consecutive number of correlations are obtained, the synchronizer switches to the lock mode. Once in the lock mode, a preselected consecutive number of misses must occur before it will return to the search mode.

3.1.2.8 Alternates

The balance between hardware and software is the prime alternate or tradeoff which must be considered in implementing the real-time

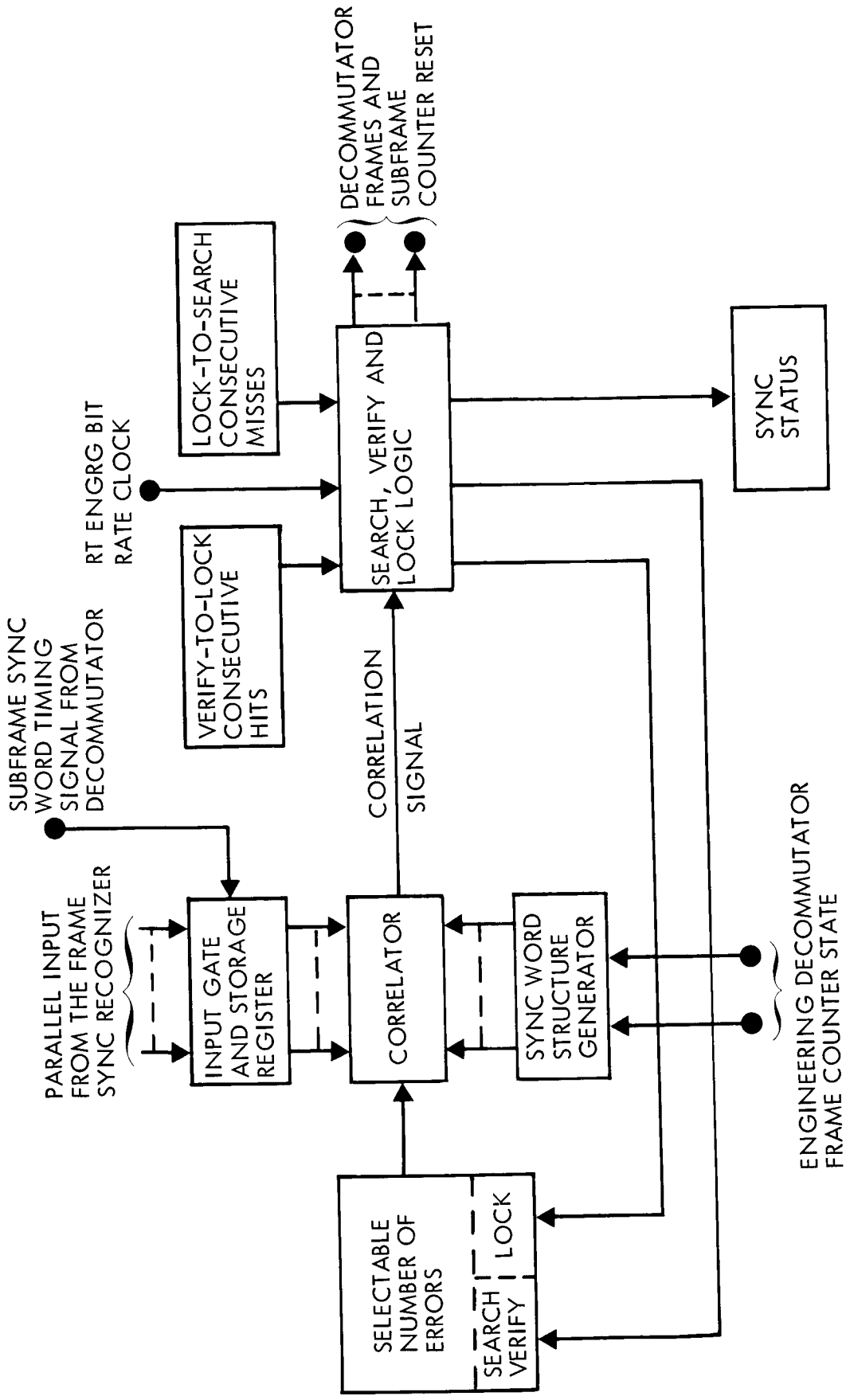

Figure 3.1-10: Real-Time Engineering Subframe Sync Recognizer

monitoring of engineering data at the DSIF. The chosen approach uses hardware to generate the necessary timing signals for computer-priority interrupt, while software and the computer typewriter input are used to process and display data. This is a reasonable balance-point because:

1) The SDS 920 computer must be capable of handling telemetry data from two spacecraft and one capsule simultaneously as well as command transmission and verification from two spacecraft sequentially. If the added burden of timing generation and synchronization were added for real-time monitoring of engineering data, the software requirements would become very complex.
2) The large majority of the functions performed by the hardware are of timing-generation as opposed to data routing, storing, processing, and displaying. Hardware is much more efficient than the computer in performing timing functions. Also, the timing format is much less susceptible to change than data routing and display.
3) There are a large number of controls which are associated with frame and subframe synchronization. If these functions were provided by software, control access would be more limited than with hardware.
4) The correlations performed in the frame and subframe synchronizers are partially analog in nature, and therefore better suited to hardware.

If a larger computer facility were available at the DSIF, the balance point chosen above should be re-evaluated.

3.1.2.9 Command Processor

A functional block diagram of the command processor is shown in Figure 3.1-11. Its purpose is to provide the special processing necessary to take command words from the computer or backup sources, verify that the command has been correctly received in the command processor, and verify transmission of the correct command.

3.1.2.10 Operating Modes

There are three operating modes--normal, backup, and test. Data flow in the normal mode is as follows:

At the specified GMT for transmission, a command triplet (three 26-bit words) is transferred from the computer through the load programmer into the transmit register. The transmit register compares the three words. The modulator output is compared in the transmit register with the transmitted word. If an error is detected, the transmission is inhibited and an alarm is sounded. If they are not identical, the computer is asked to retransmit the command triplet to the load programmer. In addition, the command word is stored and displayed by the transmit register for comparison with the command triplet which the spacecraft transmits back to the DSIF via a real-time engineering telemetry channel. The command verification words are stripped out of the RT engineering data by the SDS 920 computer and routed through the load programmer into the receive register. The receive register takes a majority vote between the received command words; if a majority exists, this majority is presented to the command computer for comparison with

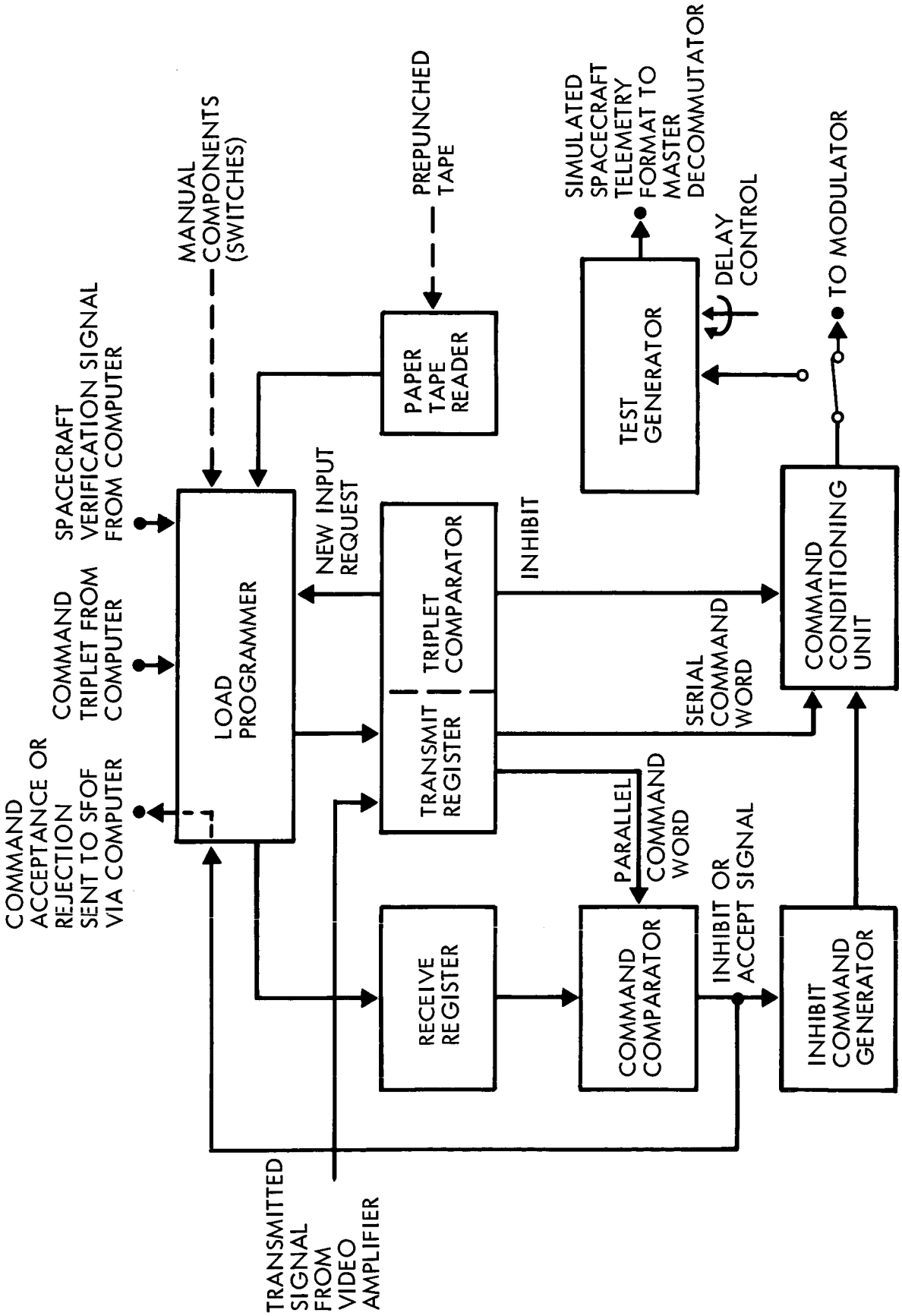

Figure 3.1-11: Command Processor

the word stored in the transmit register. If the words are identical, an acceptance signal is sent to the SFOF via the SDS 920 computer. If any of the restrictions outlined above are met, the command comparitor directs the inhibit command generator to transmit an inhibit command to the spacecraft, which then rejects the previously-received command. If no command inhibit is transmitted, the spacecraft accepts the command as correct.

3.1.2.11 Backup Mode

In the event that the command section of the SDS 920 computer is inoperative, it is necessary to insert the command triplet into the load programmer by using either the paper-tape reader or manual commands. In this case, if the transmit register does not receive the command triplet correctly, an alarm is sounded indicating that the command triplet should be resubmitted to the load programmer.

3.1.2.12 Alternates

The prime alternate consideration is the removal of the SDS 920 computer from the backup mode. This would necessitate addition of data stripping-and-processing functions to the RT engineering decommutator to recover those words associated with command verification.

3.1.2.13 Frequency Down Converter

This unit translates the telemetry spectrum from the 10-megacycle receiver IF to the lowest intermediate frequency compatible with the telemetry spectrum. This allows recording of the predetected signal at a speed commensurate with that required for serial-recording of

reconstructed PCM data. The unit, as shown in Figure 3.1-12, performs the following functions:

1) Band limiting of the input signal about its 10-mc center frequency;
2) Down-conversion to a 500-kc intermediate frequency. The first down converter uses the 10-mc reference frequency. If the reference frequency is not available, a backup 9.5-megacycle crystal oscillator will be used for the first down-conversion;
3) Band-limiting of the 500-kc intermediate frequency and down-conversion to the selected output frequency.

3.1.2.14 Alternate Mechanization

An alternate recording technique which could take the place of the predetection recording of the frequency down-converter output is the recording of the telemetry subcarriers at the output of the 10-mc phase detector. While this alternate approach eliminates the frequency down-converter, it does not allow for the possibility that the 10-mc phase detector loses lock. The use of the frequency down-converter is justified since it is of prime importance that a record be kept of all data, under as many unfavorable contingencies as possible.

3.1.2.15 Computer Interface Equipment

This unit organizes the telemetry data-words into a form more compatible for insertion into the DSIF computer and provides the time buffer for assembling a complete frame of data. In doing so, the computer interface equipment performs the following functions:

1) Accepts parallel 7-bit telemetry data-words from the master decommutator and frame sync recognizer;

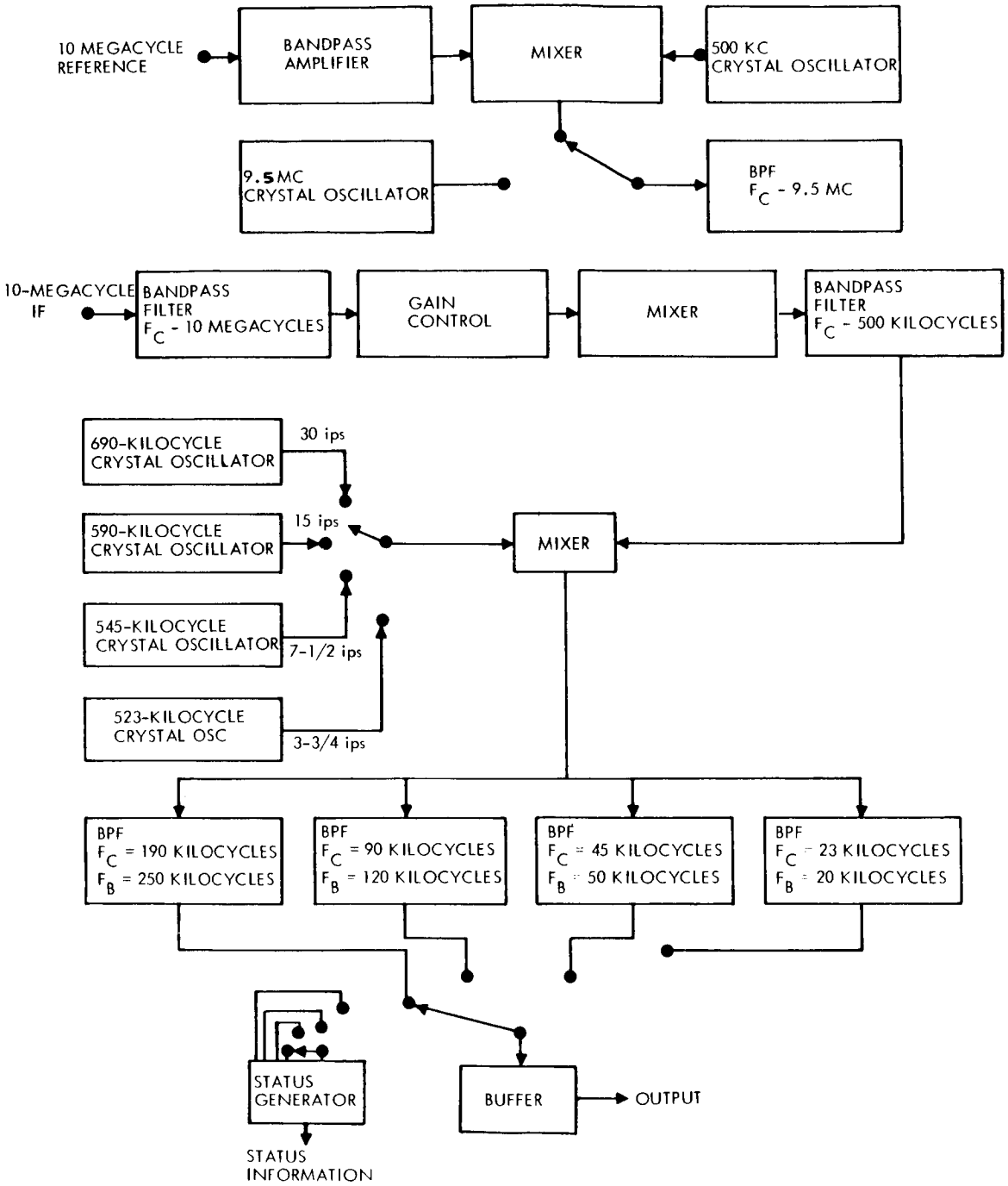

Figure 3.1-12: Frequency Down Converter

2) Groups 3 of these words into a 24-bit computer word;

3) Stores these grouped words in a buffer memory until a complete frame is assembled;

4) Supplies this data to the DSIF computer.

Data is formatted as 7-bit parallel words in the master decommutator and frame sync recognizer and is supplied to the buffer memory. This data is assembled into a 24-bit word format and stored sequentially in a buffer memory. The frame synchronizer notifies the computer interface equipment when a frame sync has occurred. It in turn notifies the command and telemetry data-handling computer (SDS 920) with a priority interrupt signal. The assembled data is then read into the computer under its command timing.

3.1.3 Software - DSIF

3.1.3.1 SDS 920 Command Processing System

The SDS 920 command processing system provides the capability for receiving, verifying, displaying, storing, and controlling transmission of commands from the SFOF to the spacecraft via the Voyager communications ground equipment at the DSIF. These commands are originated from the SFOF 7094 user program which is written to produce teletype command-message strings in a format compatible for transmission to the spacecraft. These command strings are stored on the disk at the SFOF. At the SFOF, a 7040 routine is used to transmit these commands over teletype lines. When these commands are verified at the on-site computer, a message is sent to the SFOF requesting the next command message.

The on-site command processing system consists of subroutines which are grouped into two major programs, the command verification processor and the command transmission processor.

3.1.3.2 Command Verification Processor

The on-site SDS 920 command verification processor has the requirement for accepting a string of command triplets transmitted from the SFOF. The command strings are preceded by end-of-message, preamble, and an administrative message with GMT. The commands are sent as triplets, one at a time. The last command in the sequence has a special code-character indicating the end of the message.

The input processor constantly looks at incoming teletype messages coming over the TTY lines. When it finds the preamble that indicates there is a command triplet following, it alerts the system and stores the following command triplets. At this time, the SDS 920 command processor examines the command triplet for authenticity. If the command is found to be correct, a special preamble is prepared and the command triplet is stored in a buffer.

If the command retransmission message is prepared, one of the teletype lines to the SFOF is selected and the prepared message, preceded by an end-of-message, is transmitted to the SFOF. If the command was verified at the DSS, the on-site computer looks for the next command triplet from the SFOF. If the command was not verified, the same command triplet is retransmitted from the SFOF.

This sequence of events continues until the last command triplet has been successfully verified. When the verified command sequence is complete, the stored commands in the SDS 920 are punched on paper tape in a format compatible with the Voyager ground equipment. This punched paper-tape also has a leader on it with the time for transmission. The system alerts the DSS operator by a message indicating what set of commands are being punched-out and its GMT of transmission. The operator then verifies this paper tape by running it back into the SDS 920 command processing system, which compares it bit-by-bit, and a new tape is punched in the event an error was detected.

3.1.3.3 Command Transmission Processor

At a preset time before transmission, the command transmission processor alerts the DSS operator by message on the typewriter, stating that it is x minutes away from transmission of a particular command string to the Voyager spacecraft. The alerting time of x minutes will be inserted at the time of command-program initiation.

The operator types in an instruction notifying the SDS 920 that the proper command tape has been verified and loaded on the tape reader. When the transmit - GMT is reached, the first command triplet is automatically read from the paper tape-reader and sent to the command-control transmission ground equipment. After the command has been transmitted, verified, and enabled by the ground equipment, a signal requesting the next command is sent back to the SDS 920. At this time, the SDS 920 issues an administrative message which is sent to the SFOF,

reporting that the commands have been transferred from the SDS 920 to the command transmission equipment. Also, the DSS operator is able to monitor the command transmission by observing the SDS 920 line printer. The above command transfer control, printout, and SFOF notification is repeated until the complete command sequence is transmitted, verified and stored in the spacecraft programmer.

3.1.3.4 SDS 920 Telemetry Data-Handling System

The SDS 920 telemetry data-handling system will provide the buffering, formatting, and editing of the telemetry data-stream as it is received from the on-site ground equipment and for controlling the transmission to the telemetry data to the SFOF. The formatted telemetry data is coded so that it is completely compatible with the data links and the SFOF equipment. The high-speed data line (HSDL) is used for transmission, and the teletype is used as backup. In the primary mode the complete telemetry stream is transmitted. In the TTY backup mode, only edited portions of the telemetry frame are transmitted. To accomplish the above, the telemetry data-handling system is programmed by three major software programs. These software programs are the input trap processor, telemetry processor, and the output processor.

3.1.3.5 Input Trap-Processor

The raw telemetry-data is transferred from the spacecraft to the DSIF in a serial stream at a variable-bit rate dependent on the flight mode. At the DSIF the decommutator identifies the 91-bit serial PCM telemetry frame, establishes time reference and transfers this data into the computer input channel. The input trap-processor accepts the data

words and transfers them into a memory buffer. This routine is controlled by the external interrupts, frame sync, and word sync, which are generated by the ground equipment. This routine also identifies each of the frames as they are stored in an input buffer.

3.1.3.6 Telemetry Processor

The telemetry processor formats and edits, prior to transmission, the raw telemetry-data from the input buffer. The format of the data is compatible with the data transmission links and ordered so it provides readable intelligence on the teleprinters at the SFOF. The HSDL has sufficient capability to transmit all the data received on the lower subcarrier-frequency. However in some modes the teletype lines, at a thirty bit/sec rate, are not capable of transmitting all the raw telemetry data in real time. Therefore, several edit modes are required to accommodate the transmission rate. The telemetry edit modes also select various priority measurements and combination of measurements for priority transmission to the SFOF or display at the DSIF during various mission phases. Prior to telemetry processing, the system is initialized with the proper set of tables for a particular edit mode. During the flight these edit modes will be changed at a pre-set time according to a particular phase in the mission or by a mode request from the SFOF. The modes will be changed by entering a message through the SDS 920 typewriter. The SDS 920 telemetry processor will then be required to select the proper edit tables to form the telemetry frame. Each mode specifies the portion of the telemetry frame to be selected for transmission, the commutation order, and the sampling rate.

The standard data-block format for a one-telemetry frame is shown in Table 3.1-1. The general format shows that a message-line will contain, at most, N telemetry-data characters. The N adapted as a system design standard will be chosen to enhance the readability of primary-mode full-stream printout and to minimize the likelihood of transmission errors destroying the frame-start message. By convention, all telemetry data message-lines but the last in a frame must contain the full N data characters.

For transmission via HSDL, the standard format is transmitted for each telemetry frame encountered. When transmission starts, no preamble or data identification word is placed on the line at the DSIF. The required identification is entered at the SFOF. If the SFOF design changes requiring a preamble to be inserted at the DSIF or the HSDL similar to the TTY requirement, then the SDS 920 will insert the required HSDL preamble.

For transmission via teletype, the same message-line sequence is used. In this case an end-of-message and telemetry-data preamble are sent out over the teletype lines. According to the particular mode of transmission, one or a maximum of three teletypes will be used. When lines are shared, successive frames are sent on alternate lines.

Performance telemetry data and edit modes are provided to accommodate each phase of the mission and are selectable at the time of SDS 920 and IBM 7040 Program initiation. The edit mode selects the measurements that are required at the SFOF during the particular mission phases.

Table 3.1-1: TELETYPE TRANSMISSION STANDARD FORMAT

(ONE-TELEMETRY FRAME)

CR/LF/5/5/XX/GMT TIME (10 CHARACTERS)/P

CR/LF/ID/TELEMETRY DATA (N CHARACTERS)/P

CR/LF/ID/TELEMETRY DATA (N CHARACTERS)/P

CR/LF/ID/TELEMETRY DATA (N CHARACTERS)/P

MESSAGE LINE

- The message line is repeated until frame is complete.
- The above format is repeated for each frame.
- Telemetry data transmission is preceded by end of message and preamble message.

NOTE:
CR = Carriage Return
LF = Line Feed
55 = Frame-Start Sync Code
XX = Telemetry Data Mode
P = Longitudinal Parity
ID = Data Message-Line Number
N = Number of Telemetry-Data Characters (Each character is four data bits plus parity)

During critical mission phases the teletype lines are utilized as backup to the high-speed data link.

3.1.3.7 Output Processor

The output processor takes the formatted and edited raw telemetry data from the output buffer for transmission over the high speed data line or teletype. The control information for the particular transmission media comes from the telemetry processor. If the system is using the HSDL, the program transfers telemetry data over the line at 600, 1200, and 2400 bits-per-second rate. This is asccomplished by adding filler bits to keep the lines at their full transmission rate. If the teletype lines are used, the output processor has the capability of controlling the transmission of telemetry data over one or more lines. The output processor also provides for the display of all telemetry data transmitted to the SFOF.

3.1.4 Hardware - SFOF

3.1.4.1 Subcarrier Demodulator and Biorthogonal Block Decoder

This unit recovers a serial PCM data train and data rate clock from a biorthogonal block coded telemetry subcarrier. The output signals are supplied to the IBM 7040 at the SFOF. A block diagram of the unit, shown in Figure 3.1-13, depicts the specific functions that are to be performed.

The subcarrier carrier demodulation and symbol synchronization function are performed by hardware functionally equivalent to that described previously, except that the data regenerator and format converter are

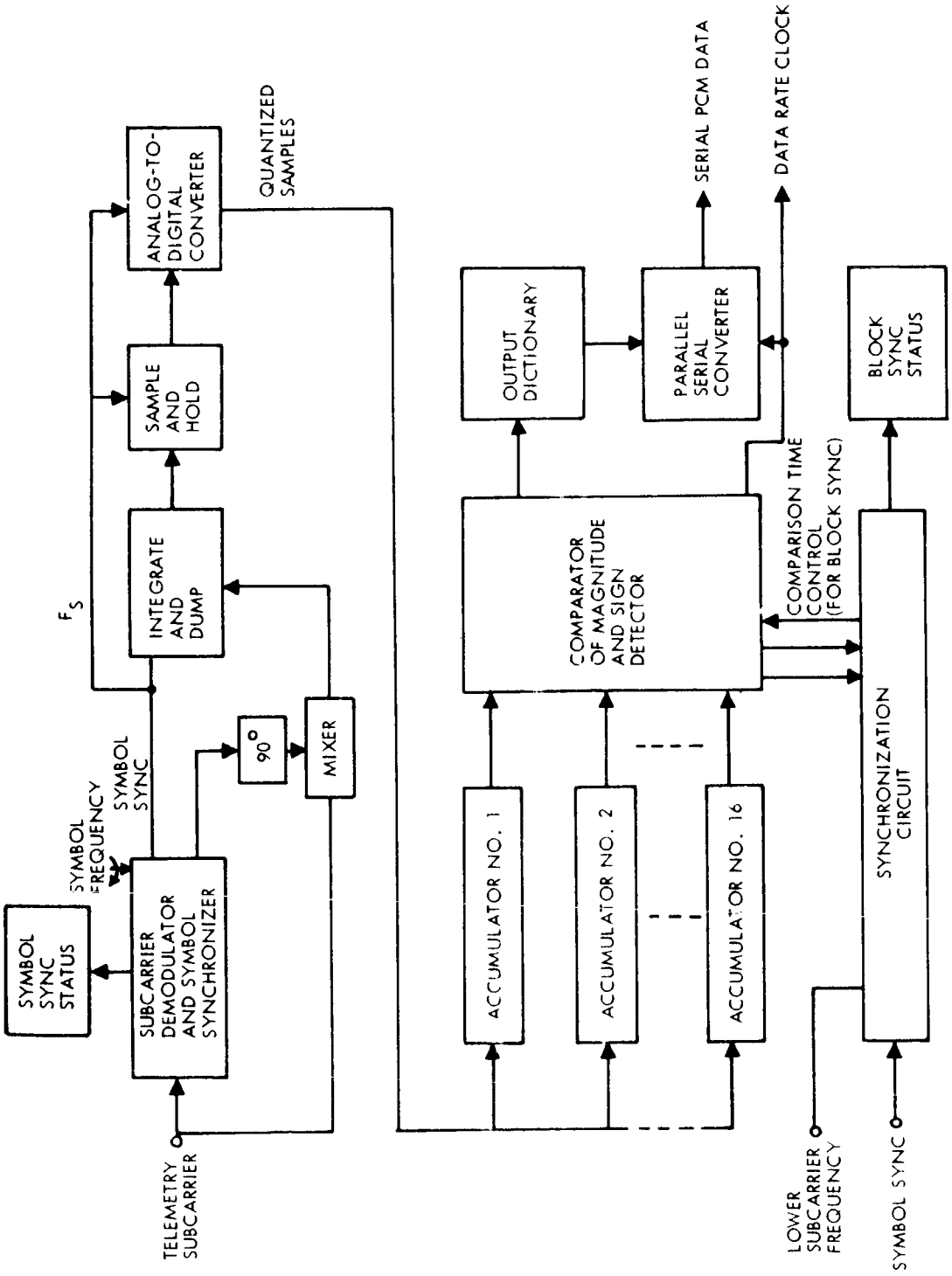

Figure 3.1-13: Subcarrier Demodulator and Biorthagonal Block Decoder

deleted. Figure 3.1-14 shows the waveforms at the output of the subcarrier demodulator and symbol synchronizer as well as schematically depicting the coding-decoding process. The synthesized subcarrier frequency is used to coherently sample the data on a symbol by symbol basis. Each sample is quantized to an eleven bit level and either added or subtracted from each of the 16 accumulators. Thus on a given block of data, 16 correlations are made on symbol by symbol basis. Each correlation is sampled and quantized and then either added or subtracted in the accumulator depending on whether the corresponding code word symbol is a "1" or "0". The magnitude of the numbers stored in the accumulator at the end of each word period is compared. The sign of the greatest in magnitude determines whether a given word or its complement is readout as a five bit parallel word from the output dictionary. The five bit word is then converted to a serial signal by the parallel to serial converter.

Block synchronization which is required to perform the data decoding is provided by the synchronization circuit which makes use of the lower subcarrier frequency and symbol synchronization. In the acquisition mode the gross phase of the block counter is set by the low frequency subcarrier zero crossing while the fine phase is controlled by symbol synchronization.

3.1.4.2 Alternate Mechanizations

Other mechanizations are available for decoding bi orthogonal block coded data which are functionally equivalent to the one shown in Table 3.1-1. The most significant change would be in the correlation and peak detection section and the block synchronization of the synchronizer..

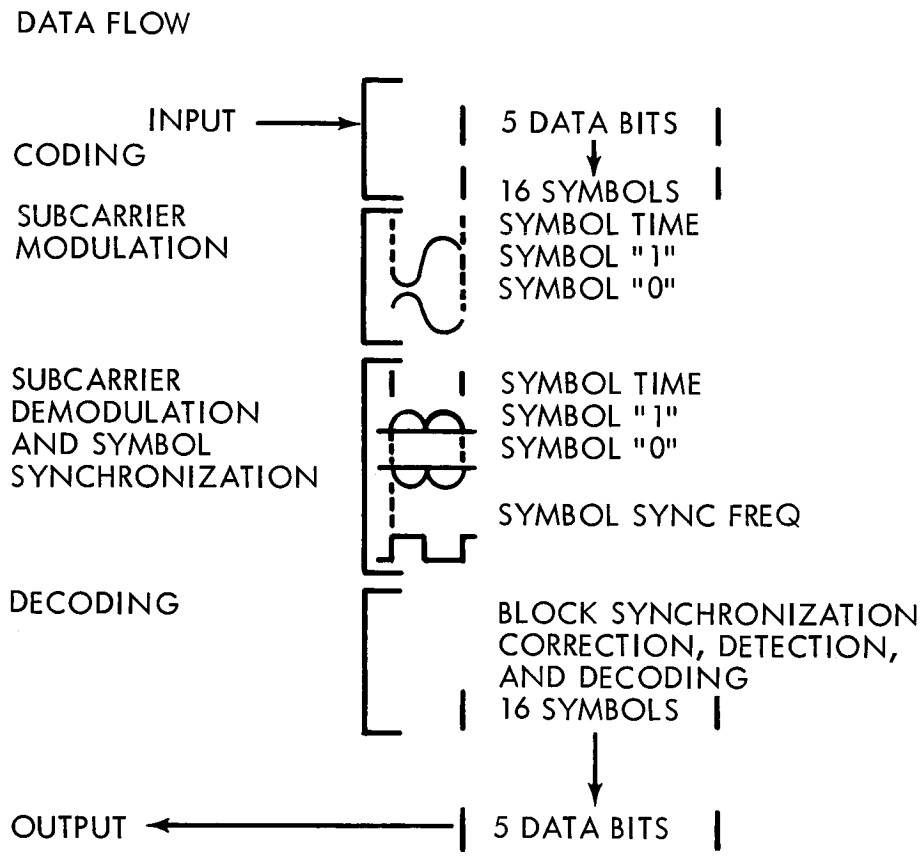

Figure 3.1-14: Block Coding - Decoding Data Flow

Specifically, two other alternate techniques are available to perform these functions. One, the A/D converter and digital accumulators can be replaced by 16 analog correlators which correlate the input waveform with the 16 stored biorthogonal codes and locates the greatest magnitude terms, all in an analog fashion. Second, optical techniques can be used to perform this identical function. A matrix which shows the advantages and disadvantages of each of the above techniques is given in Table 3.1-2.

Table 3.1-2: COMPARISON OF MECHANIZATIONS

	Proven in Hardware	Comparative Reliability	Comparative Size	Comments
Chosen System (Digital)	Yes	High	Large	Block size limited to 5 by ground equipment size
Analog System	Yes	Low	Medium	Analog System stability critical to performance
Optical System	No	Projected High	Small	If proven, may allow larger block size

A second block synchronization technique which makes use of the comma free characteristics of the chosen biorthogonal set exists. Theoretically it should be possible to shift the phase of the block counter symbol by symbol until the correlation signals on a block by block basis reach a maximum average value. This would indicate the block synchronization point. However, until this technique is proven with hardware, the synthesized lower frequency subcarrier terms should be used for block synchronization.

3.1.4.3 Predetected Tape Demodulator

This unit, as shown in Figure 3.1-15 accepts any one of four intermediate frequency telemetry spectrums from a predetection recording. It synthesizes the intermediate frequency carrier and then uses this component to demodulate its sidebands. The Predetected Tape Demodulator output is used at the appropriate subcarrier demodulators, bit synchronizers, and data reconstructors.

A predetected telemetry spectrum at one of four intermediate frequencies is supplied to the input of the predetected tape demodulator. This input is suitably buffered and then passed into a phase-lock loop carrier detector which locks onto the IF center frequency carrier term. The synthesized carrier term is then used in a carrier demodulator to recover carrier sidebands. The demodulated carrier terms are passed through a selectable low pass filter to eliminate undesired output spectrum.

3.1.5 Software - SFOF

3.1.5.1 IBM 7040/7044 Telemetry Processing System

This program satisfies the requirement for analysis of the telemetry data stream as first received by the SFOF from a DSIF. The raw telemetry stream is displayed by teleprinter or high speed printers. In order for selected telemetry measurements to be displayed by teleprinter, high speed printer or plotter, the telemetry data stream is edited; formed into telemetry frames for decommutation; and routed to the display devices. In addition, alarm monitoring is performed

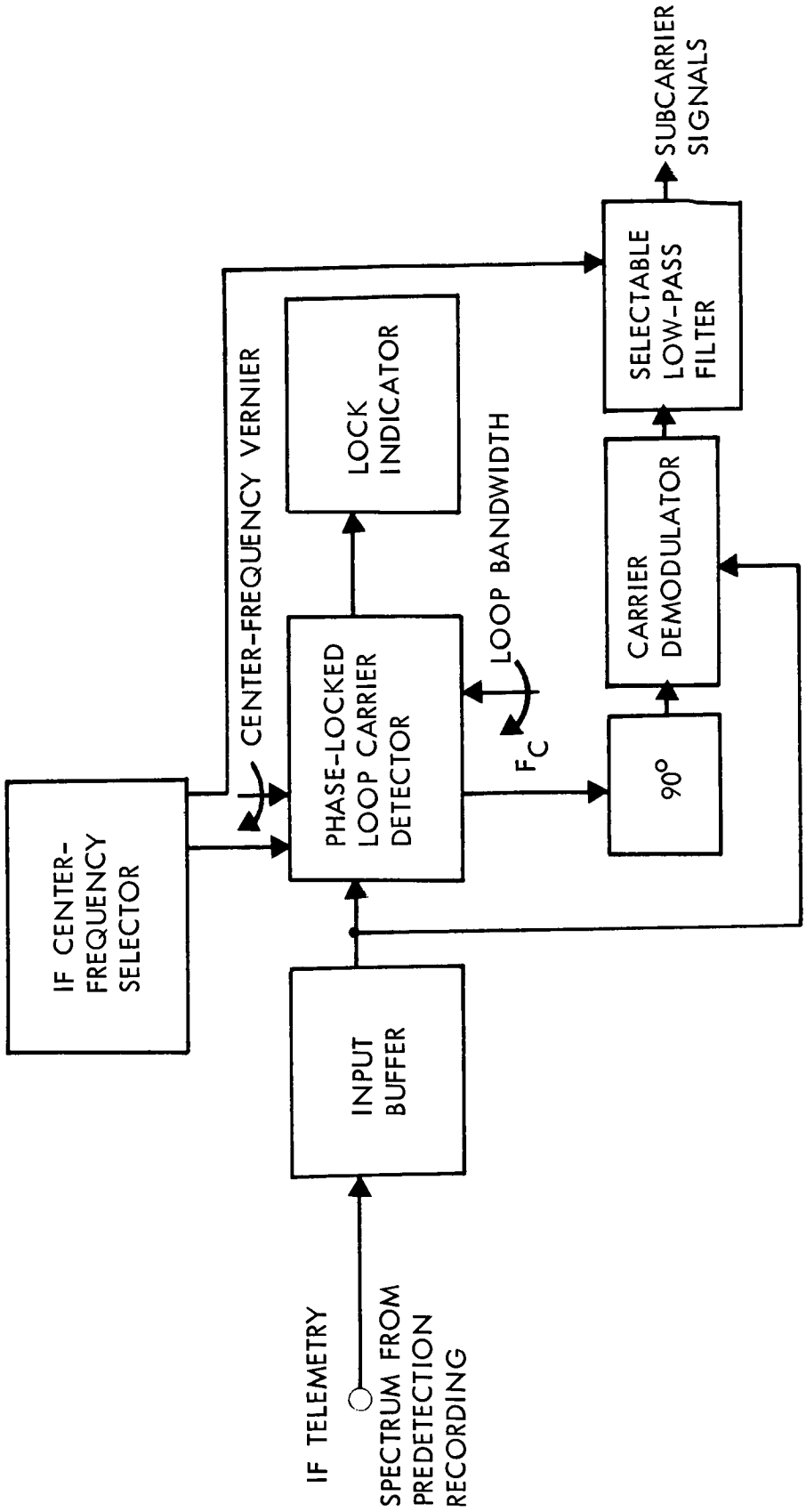

Figure 3.1-15: Predetected Tape Demodulator

on selected telemetry measurements by comparing the measurement value with limiting values.

The 7040/7044 Telemetry Processing System is considered as three distinct sections: the Input Processor, the Telemetry Processor, and the Output Processor. All three sections operate in the IBM 7040 computer concurrently as one integrated computer program. Prior to the operation of the processing system, a large number of mission dependent tables and parameters used by the processing system will be set up or initialized.

3.1.5.2 Input Processor

The Input Processor is a number of basically mission-independent routines that interface with existing 7040/7044 routines in the SFOF system. The Input Processor, Figure 3.1-3, places complete message lines in the HSBUFI buffer.

3.1.5.3 Telemetry Processor

The Telemetry Processor forms the message lines into complete telemetry frames and stores decommutated data into the buffer TELMI. In addition, alarm monitoring of selected telemetry measurements is performed by the Telemetry Processor. When the telemetry processing executor routine is notified by routine TPSIN or routine TTYIN that one or more message lines are available in buffer HSBUFI for processing, the process executor routine moves the message line(s) from HSBUFI to its decommutation buffer. When the decommutation buffer is full, this routine searches for the frame sync mark. When the frame sync mark is found, one telemetry frame of data

is formed in the decommutation buffer. After the telemetry frame is formed, the processor executor ascertains that the required decommutation table is available to decommutate the formed telemetry frame; if not, the required table is obtained from disk or tape. (The decommutation tables for all possible data modes will be set up from card input during set up.) Using the information in the decommutation table to identify each data sample by a unique commutation number, the samples are stored in the TELMI buffers. As the data samples are stored, the processor executor enters the alarm routine for those measurements for which alarm monitoring is performed. If a measurement exceeds the alarm limits a pre-specified number of times (which is set at program initiation and changed as necessary by message composer input), the alarm prints an alarm message on the user's administrative printer. After the complete, formed telemetry frame has been stored in the TELMI buffers, the processor executor begins forming the next telemetry frame.

3.1.5.4 Output Processor

The Output Processor is a collection of basically mission-independent routines that now exist within the SFOF system which will be modified as necessary to be compatible with the Voyager system. The routines will provide the ability to display the raw telemetry stream or selected telemetry measurements in real-time.

3.1.5.5 IBM 7094 Telemetry Processing System

The IBM 7094 Telemetry Processing System processes the telemetry data for subsequent use by 7094 analysis programs and for formatting stored

telemetry for display similar to the IBM 7040 real-time displays. As the telemetry data from the spacecraft is received at the Space Flight Operations Facility (SFOF), it is recorded on tape and disk by the IBM 7040 computer for processing on the IBM 7094 computer. The IBM 7094 Telemetry Program processes the telemetry data stream and edits the telemetry data stream, forms the telemetry data stream into telemetry frames, time-tags and decommutates the telemetry frame and stores the decommutated data on tape and disk. The decommutated telemetry data on tape serves as a historical record of the telemetry data. The decommutated telemetry data on disk is accessible to any user program. The 7094 programming system also processes past-time telemetry data display requests and provides a capability for selecting the requested data over a specified time interval and produces formatted displays comparable to the real-time displays available on the IBM 7040.

The IBM 7094 programming system is divided into three parts: the Input Processor, the Telemetry Processor and the Output Processor.

3.1.5.6 Input Processor

The Input Processor is essentially a mission-independent program which is available as part of the present SFOF programming system. It requires some modification to process Voyager data. The processor will examine the raw stream of input data and pass the information on to the proper dependent processor.

3.1.5.7 Telemetry Processor

The Telemetry Processor is a mission-dependent program which examines the raw telemetry stream which contains data identification words and forms the raw stream into telemetry frames, time-tags the frame, decommutates and flags measurements with data parity errors. The decommutated and flagged data (raw counts) is stored in the Master Data Table on disk and on save tape for historical reference. It also is capable of operating in several modes and is able to interpret a message sent via the Input Processor as in which mode the data is to be processed. It is to be processed in a mode other than that indicated on the raw telemetry stream. All telemetry data on a scratch tape prepared by the Input Processor are processed during its run.

3.1.5.8 Output Processor

The Output Processor prepares requested past-time displays from data available in the Master Data Tables. This is a mission-independent program which requires only minor modification to handle Voyager data.

3.1.5.9 IBM 7040 Command Processor

The 7040 Command Processor, a modified mission independent program, reads the command sequences consisting of EOM, Preamble, instructions to the DSS operator, command triplets, and GMT from disk and transmits the commands from the SFOF to the DSIF. In addition, it automatically verifies transmission of each command from the SFOF to the DSS.

3.1.5.10 Flight Path Analysis

A completely mission-dependent software package is required for flight path analysis. The basic function of this program is to analyze telemetry trajectory information and issue guidance commands to accomplish the basic mission functions of trans-Mars trajectory, midcourse correction, Mars orbit injection and Mars orbital corrections. For the specifics of this program, see Volume A, Section 2.1.2.

3.1.5.11 Spacecraft Performance Analysis

The spacecraft performance analysis program accomplishes the following functions:

1) Perform the analyses required to assess subsystem performance, and provide status information to the user area.
2) Establish future subsystem capabilities and status, via trend analysis, as a function of mission time and event sequence.
3) Display output data in the user area on specified display devices and in specified formats.
4) Accept call-up from the user area I/O consoles in accordance with pre-established priorities.
5) Store specified program outputs in the disk file or on tape for call-up by other programs.
6) Determine emergency situations and issue corresponding alarm messages.

3.1.5.12 Space Science Analysis

This is a mission-dependent software program which analyzes the space science data received from the Voyager Spacecraft. As the scientific package is not yet defined, this program cannot now be described.

3.1.5.13 Manual Analysis Aids

Manual analysis aids are required to accomplish the following functions:

1) Provide a reduced capability in the event of a computer failure and check computer output.
2) Provide additional analysis aids not provided by the computer programs.
3) Maintain performance test data, calibration and configuration data.
4) Provide failure and analysis trees for fault isolation.
5) Provide non-standard event procedures to determine work-around procedures and establish mission restraints imposed by spacecraft subsystem performance.

The manual aids supplement and provide backup for the command and telemetry data computer programs. They consist of manuals for each subsystem containing analysis aids, engineering and test data, and procedures and methods to perform specific functions and provide information pertinent to mission control. Procedures to cope with

abnormal performance indications of each spacecraft subsystem are included. The manuals are designed specifically for operational use and are self-sufficient from a technically qualified user viewpoint.

3.1.5.14 Mission Integration and Control

In addition to the handling of data within the Deep Space Net and the providing of data for use by flight and scientific data analysis programs, software is required for mission integration and control. The requirements establishing this software are based upon the need for common information in several areas and for assurance that the requirements and actions of each area are compatible with spacecraft design and the mission objectives.

The ability to correlate the spacecraft clock time with Greenwich Mean Time and to detect errors in timing which may have occurred in the spacecraft is required.

Since it is not possible to predict the precise time of occurrence of many of the inflight events, a means of updating the flight status is desirable. This is accomplished by providing the SFOF with software which lists both past and future events within approximately a 24-hour period.

3.2 LAUNCH-COMPLEX-EQUIPMENT FUNCTIONAL DESCRIPTION

This section defines the launch complex equipment (LCE). LCE is the system-level operational support equipment that accomplishes Planetary Vehicle (PV) prelaunch preparation, test, and operations, as well as flight-readiness verification of two qualified PV's.

3.2.1 Equipment Identification and Usage

The LCE includes all OSE used at the launch pad and in the blockhouse, the ESA, and the magnetic-mapping area. (For discussion of operations and equipment in the magnetic-mapping area, see Section 3.6.2, of this volume.

3.2.2 LCE Design Criteria Parameters and Function Definition

The following are the critical parameters on which LCE design criteria are based: spacecraft safety, reliability of spacecraft flight-readiness monitoring, operational simplicity, versatility, internal design simplicity, rapid task accomplishment maintainability, engineering design status, and cost. One other unique parameter exists for the magnetic-mapping area, which is the creation of a minimum effect on the beta field by the OSE. These criteria and the concepts described in Section 2.0 of this volume, (which apply to the LCE) are the basis for decisions in defining the LCE.

The sequence of operations in the ESA is outlined in Figure 3.2-1. The major operations to be performed in the ESA are magnetic mapping (see Section 3.6.2), fuel and pyrothechnics loading, thrust vector alignment, and encapsulation of the Planetary Vehicle. The OSE consists

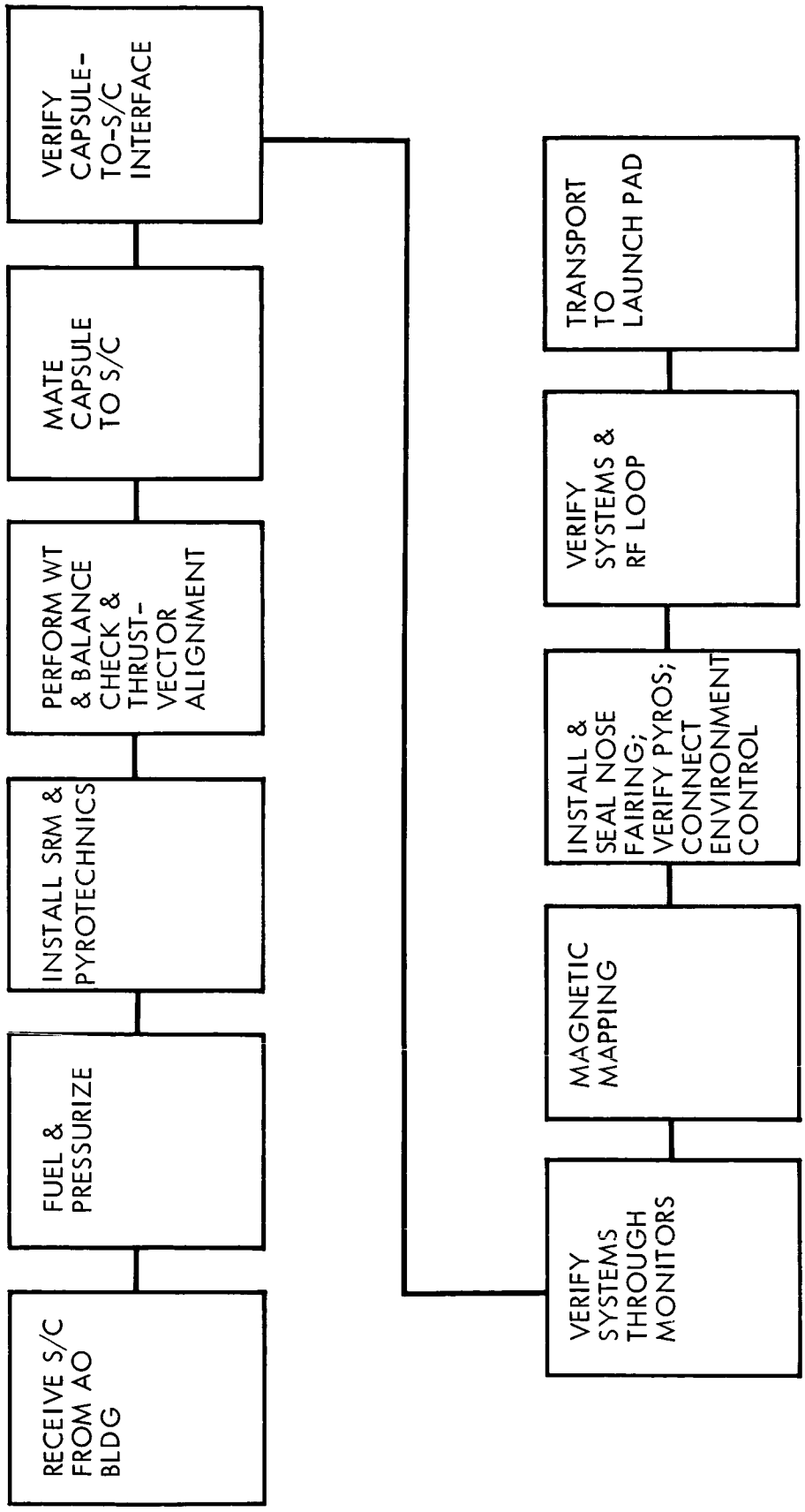

Figure 3.2-1: ESA Operation Sequence

of: LCE (transportable duplicates of command, monitoring, and recording equipment of certain blockhouse items); MDE (used in conjunction with LCE) to process data; AHSE items required for assembly, handling, transport, and environmental control; and selected SSTE items such as pyrotechnic test kit; propulsion subsystem service units; alignment adapters; etc.

In the magnetic mapping, ESA, and launch complex areas, the communication linkage arrangements vary during operation as dictated by test requirements, local conditions, and general range-safety requirements. Couplers (rf) and hardwire linkages, radiated rf signals, test points, and umbilicals are used at appropriate times.

Following completion of ESA operations, the encapsulated PV is taken to the service structure and placed on the launch vehicle. Emplacement is by the launch vehicle contractor.

Prior to emplacement of the flight-model PV on the launch vehicle, the LCE, facilities, and launch vehicle are verified as operational and compatible with the flight-model PV. In the performance of these checkout operations, the spacecraft simulator (see Section 3.5) and the proof test model (PTM) are to be employed. The prelaunch and launch countdown activities, including plus and minus counts, are simulated.

The LCE transmits power and commands to the Planetary Vehicle (PV) after the vehicle is installed on the launch vehicle at the launch pad. The

equipment also monitors and records selected, critical spacecraft functions received from the umbilical and flight data system modes before liftoff. The LCE is capable of monitoring flight readiness of the various spacecraft subsystems without assistance from any other facility (e.g., DSIF). No test capability is incorporated in the LCE to detect faults below the spacecraft subsystem level. Figure 3.2-2 illustrates the implementation.

At the magnetic-mapping facility and the launch pad, the major functions of the LCE are:

1) Data acquistion and transmission to and from the Planetary Vehicle;
2) Data processing of information from and commands to the Planetary Vehicle;
3) Data display for certain Planetary Vehicle and OSE information.

3.2.2.1 Data Acquisition and Transmission

Two methods of acquiring PV data exist--extracting information from data provided by the flight data system and running hardwire probes to test points in the PV through the umbilical. Both methods are used.

Three data channels for PV information are available and used in the LCE--flight data monitored on the PV S-band data system, which is transmitted by the Centaur VHF data system, and the data system functions monitored through the umbilical.

The umbilical monitors those functions concerned with PV power, environmental control, personnel, and equipment safety. Umbilical wire count is kept to a minimum.

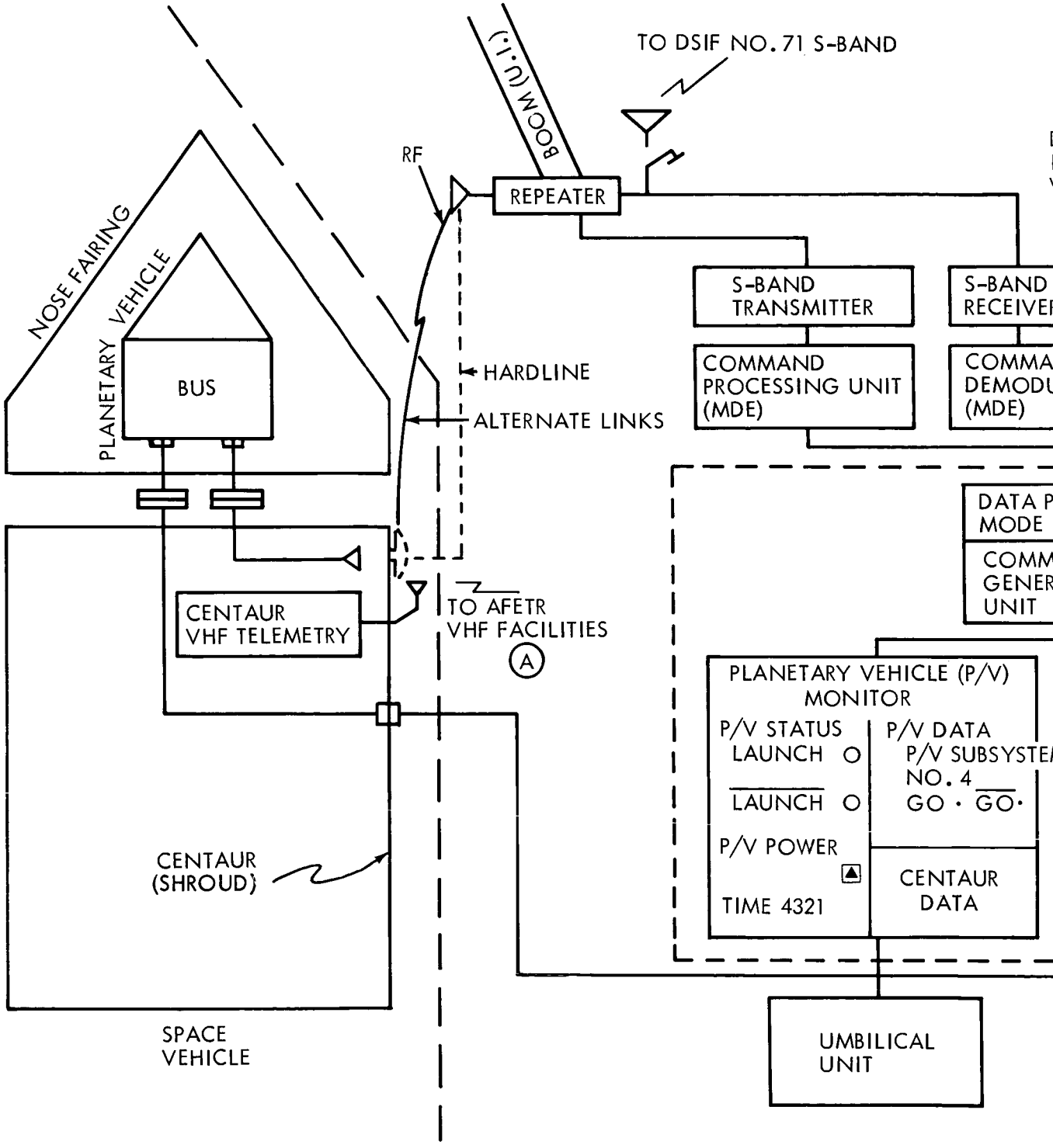
TO DSIF NO. 71 S-BAND
BOOM (U.L.)
RF
REPEATER
NOSE FAIRING
PLANETARY VEHICLE
BUS
HARDLINE
ALTERNATE LINKS
S-BAND TRANSMITTER
COMMAND PROCESSING UNIT (MDE)
CENTAUR VHF TELEMETRY
TO AFETR VHF FACILITIES
A
PLANETARY VEHICLE (P/V) MONITOR
P/V STATUS
LAUNCH O
LAUNCH O
P/V POWER
TIME 4321
P/V DATA
P/V SUBSYSTEM NO. 4
GO · GO ·
CENTAUR DATA
CENTAUR (SHROUD)
SPACE VEHICLE
UMBILICAL UNIT

5 > 1

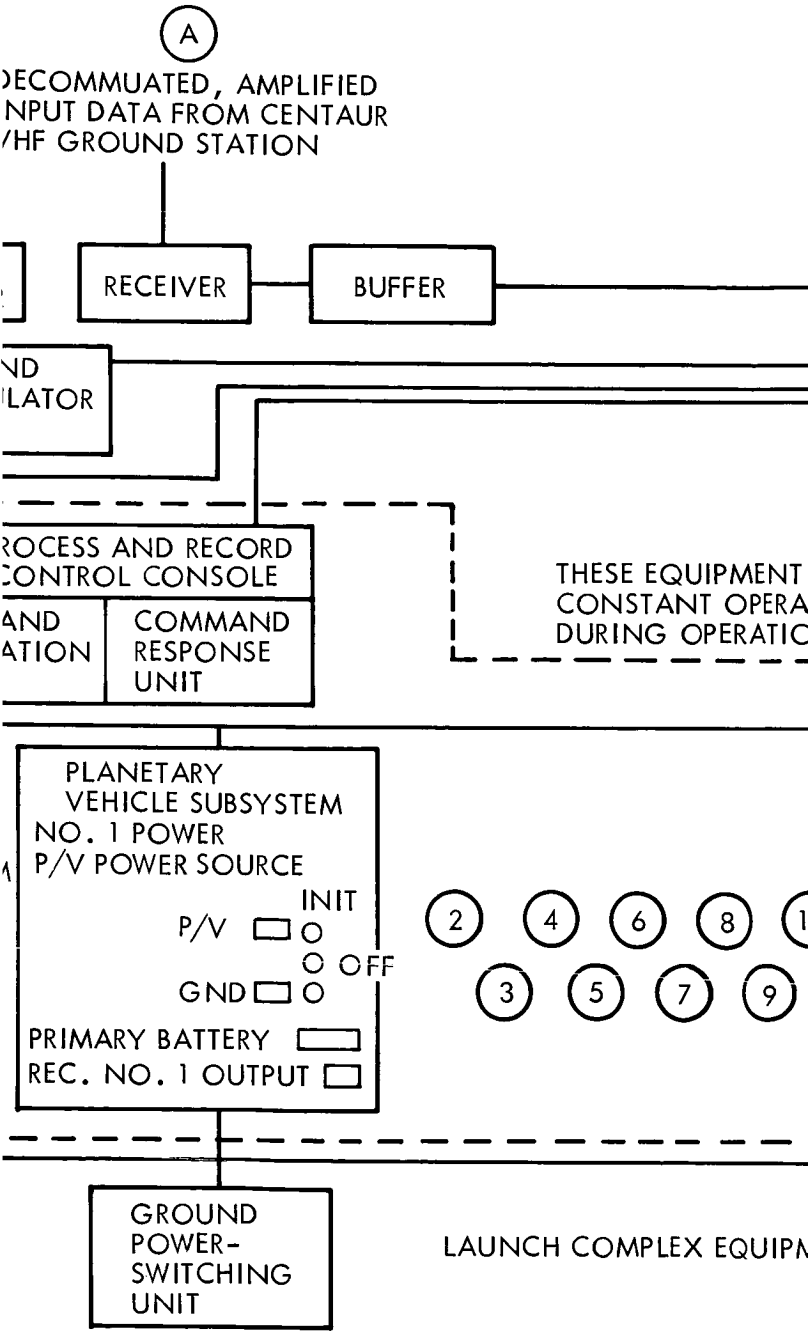
A
DECOMMUTATED, AMPLIFIED
INPUT DATA FROM CENTAUR
VHF GROUND STATION
RECEIVER
BUFFER
ND
LATOR
ROCESS AND RECORD
CONTROL CONSOLE
AND
ATION
COMMAND
RESPONSE
UNIT
THESE EQUIPMENT
CONSTANT OPERA
DURING OPERATIO
PLANETARY
VEHICLE SUBSYSTEM
NO. 1 POWER
P/V POWER SOURCE
INIT
P/V
OFF
GND
PRIMARY BATTERY
REC. NO. 1 OUTPUT
2
4
6
8
3
5
7
9
GROUND
POWER-
SWITCHING
UNIT
LAUNCH COMPLEX EQUIPM

Figure 3.2-2

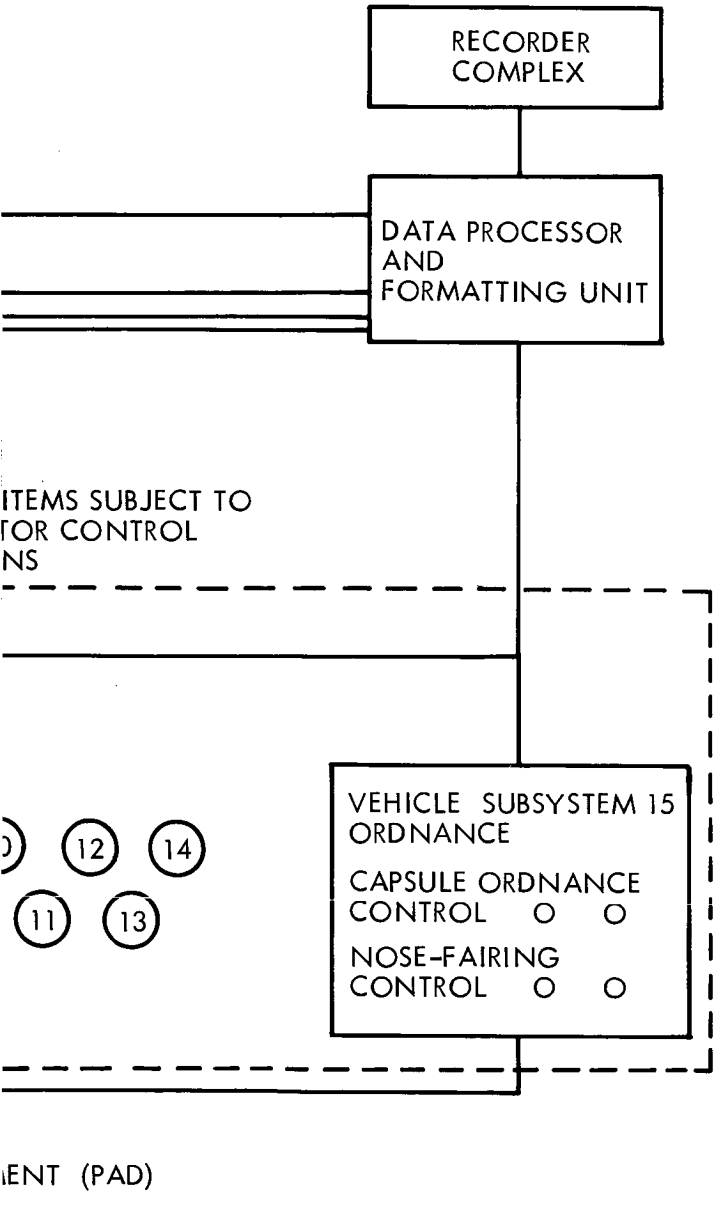
RECORDER COMPLEX
DATA PROCESSOR AND FORMATTING UNIT
ITEMS SUBJECT TO
TOR CONTROL
NS
VEHICLE SUBSYSTEM 15
ORDNANCE
CAPSULE ORDNANCE CONTROL O O
NOSE-FAIRING CONTROL O O
12
14
11
13
ENT (PAD)

To accommodate the S-band system for prelaunch operations without using the DSIF 71, S-band communications equipment and mission dependent equipment (MDE) must be provided at the blockhouse. A pad repeater provides a controllable-output open-loop frequency to DSIF 71 and closed-loop rf to the blockhouse receiver.

Planetary vehicle information which is transmitted through the Centaur VHF telemetry will be extracted and displayed in the blockhouse.

A landline receiver will be provided as part of the LCE to receive, equalize and amplify the VHF channel information. A Buffer unit will extract sync, store axial shift messages into the Data Processor and Formatting Unit (DPAF) in parallel at a twenty-four bits per shift rate.

3.2.2.2 Data Processing

Digital data must be processed to evaluate the Planetary Vehicles' response to the OSE-generated commands. Data processing is necessary for the issuance of commands to the Planetary Vehicle. Logic must be performed and both hardwired logic and programmable logic (stored program computer) were considered.

Figure 3.2-3 lists the items of OSE used in the ESA, magnetic mapping and launch complex facilities.

AHSE	Encapsulated PV Lifting Fixture	X		X	AHSE	See Vol. C., Sec. 3.4
	Planetary Vehicle Lifting Fixture	X	X			
	Flight S/C - S/C Bus Lifting Fixture	X	X			
	System Level Sling Set	X	X	X		
	Inst. S/C Simulator Lifting Fixture	X		X		
	OSE Lifting/Instl'n Set	X	X			
	Weight/Balance Equipment	X				
	Rocket Motor Alignment Fixture	X				
	Dolly, General Purpose	X				
	Rocket Motor Installation Hoist	X				
	Safety Devices	X				
	Protective Covers	X	X			
	Shipping Containers	X	X			
	Spacecraft Container	X	X			
	Work Platforms and Access Equipment	X	X	X		
	Magnetic Mapping Test Stand		X			
	Transporter, Remote Site OSE Set	X				
	Transporter (PV)	X				
	Transporter (EPV)	X		X		
	Transporter (S/C)	X	X			
MDE	Command Processor	X	X	X		See Vol. C, Sec. 3.1
SSTE	Pyrotechnic Test Kit	X				See Vol. C, Sec. 4
	Food Service Unit	X				
	Propulsion System Test Unit	X				
	Nitrogen Servicing Unit	X				
	Propellant System Purge, Dry and Flush Unit	X				
	External Power Supply Unit	X		X		
	Freon Servicing Unit	X				
	Solid Motor Transporter	X				
	Test Battery	X	X			
	Battery Charger Assembly	X		X		
	Remote AC Conditioning Assembly			X		
	External Power Supply Unit	X		X		

Figure 3.2-3: OSE Required at ESA, Magnetic Mapping Area, and the Launch Complex

ITEM NO.	ITEM NAME	USE LOCATION ESA	MM	LAUNCH CX	CATEGORY	INTERFACE
LCE						
3.2.3.1	Ground Power Switching Unit	X		X	LCE	3.2.3.2,-.13,-.14
3.2.3.2	Umbilical Function Unit	X		X		3.2.3.4,-.10,-.13,-.23
3.2.3.3	S-Band 2-Way Repeater			X		3.2.3.5,-.2
3.2.3.4	Umbilical Set			X		3.2.3.30 CENTAUR
3.2.3.5	Repeater Cabling Set			X		3.2.3.3,-.6,-.7,-.12
3.2.3.6	S-Band Transmitter	X	X	X		3.2.3.5,-.30, MDE
3.2.3.7	S-Band Receiver	X	X	X		3.2.3.5,-.30 MDE
3.2.3.8	Centaur VHF Landline Receiver			X		3.2.3.5,-.30 MDE
3.2.3.9	Centaur VHF Data Buffer			X		AFETR Ground Line
3.2.3.10	Data Processor and Formatting Unit	X	X	X		3.2.3.11,-.12,-.13 SSMP's, MDE
3.2.3.11	Recorder Complex	X	X	X		3.2.3.10
3.2.3.12	Data Process and Record Mode Control Console	X	X	X		3.2.3.10,-.11
3.2.3.13	PV Monitor Console	X	X	X		3.2.3.9,-.10,-.11,-.12 MDE, and SSMP's
3.2.3.14	Radio Subsystem Monitor Panel (SSMP)	X	X	X		3.2.3.10,-.13,-.30
3.2.3.15	Telemetry and Data Storage SSMP	X	X	X		
3.2.3.16	Antenna SSMP	X	X	X		
3.2.3.17	Attitude Reference SSMP	X	X	X		
3.2.3.18	Autopilot SSMP	X	X	X		
3.2.3.19	Science Payload SSMP	X	X	X		
3.2.3.20	Thermal Control SSMP	X	X	X		
3.2.3.21	Propulsion SSMP	X	X	X		
3.2.3.22	Reaction Control SSMP	X	X	X		
3.2.3.23	CC&S SSMP	X	X	X		
3.2.3.24	Power SSMP	X	X	X		
3.2.3.25	Capsule SSMP	X	X	X		3.2.3.10,-.13,-.30
3.2.3.26	Data Processor/Formatter (Software)	X	X	X		3.2.3.10
3.2.3.27	S-Band Antenna/Diplexer		X			3.2.3.10,-.13,-.30
3.2.3.28	Interconnect Cabling, ESA	X	X			3.2.3.10,- .13 Power
3.2.3.29	Portable Air Conditioning Unit	X	X	X		Encap. PV; Transporter
3.2.3.30	Interconnecting Cabling, LCE	X	X	X		All Block house shelter umbilical
3.2.3.31	Portable Cooling Unit					Encap. PV telecomm.

Figure 3.2-3: Continued

3.2.3 LCE Functional Descriptions

Functional description of OSE items unique to the Launch Complex/ESA/ magnetic mapping areas are given below. (Functional descriptions for equipment which is used in these areas but is basically categorized as MDE, AHSE, etc., are found in other sections of this volume).

3.2.3.1--Ground Power Unit

The ground power switching unit interfaces with the PV through the hard-line umbilical. It provides power to the PV when required, switches it, charges batteries and monitors the PV power subsystem status. The switching unit accepts commands from the PV power subsystem monitor and provides the PV power status to the same through the Data Processing and Formating Unit (DPAF). (See also Section 4.2.3.2 of this volume.)

3.2.3.2--Umbilical Unit

At one interface, the umbilical unit mates with the 3.2.3.4 umbilical set, to provide all umbilical functions not supplied by the ground power switching unit, i.e., environmental control, safety, etc. Pyrotechnic devices have monitor loops to verify status. However, all umbilical wires are capable of being shorted to spacecraft ground without damage to PV circuits, or to the OSE circuits.

One result is that for the power subsystem umbilical monitors, isolation pads are required in the PV. For pyrotechnic monitoring circuits, a further requirement is that current limiting must be accomplished so that no single circuit component failure, including wiring, will result in discharge of a device.

Further, the umbilical unit interfaces with the CC&S subsystem monitor 3.2.3.23, the PV monitor console 3.2.3.13 and the data processor and formating unit 3.2.3.10 in that it provides these units' fault data.

3.2.3.3 S-Band Double-Ended Repeater

The unit fulfills four functions:

1) Provide rf command input to ascent antenna on the shroud while the PV is on the launch vehicle on the pad (via coaxial line) from blockhouse.
2) Provide rf Output from ascent antenna to blockhouse.
3) Provide rf transmission open loop to DSIF 71 upon blockhouse command from the shroud ascent antenna.
4) Prevent rf open-loop radiation under all conditions except Item 3.

The unit is boom mounted on the umbilical tower and is provided with electrical power and switching, tuning, and control signals from the blockhouse.

3.2.3.4--Pad Umbilical Cabling

The umbilical from the blockhouse that serves the PV physically interfaces with Centaur since no hard points for mounting are provided on the nose fairing or shroud.

The umbilical provides power, environmental control, and safety monitoring functions for the PV. Continuity loops through the nose fairing ordnance circuits, mechanism squibs, igniters and PV ground are also provided.

3.2.3.5--Repeater Cabling Set

A cabling set, solid conductor and coaxial, is required between the blockhouse and the Double Ended S-Band Repeater to:

1) Provide an RF path from the blockhouse to the PV for commands.
2) Provide an RF path from the PV to the blockhouse for command verification and T/M data.
3) Provide power, open-loop antenna switching to DSIF 71, tuning and other control signals from the blockhouse to the repeater.

3.2.3.6--S-Band Transmitter

During the checkout process, it is necessary to provide RF commands to the PV. The commands are available at the output of the command processing unit (MDE) as serial modulated data. The S-band transmitter provides a low-level signal through the repeater cabling to the PV, coupling the repeater antenna to the PV antenna through the shroud ascent antenna. The S-Band transmitter is controlled from the command generation unit of the data processor and record mode control console.

3.2.3.7 S-Band Receiver

The S-band receiver monitors PV command response and flight data measurements. It accepts rf from the spacecraft through the S-band repeater/coupler hardline and provides an output to the decommutation equipment (MDE) which reconstructs the data. The S-band receiver is controlled from the data processing and record mode control console.

3.2.3.8--Centaur VHF Landline Receiver

Data available from the PV flight data system is also available through

the Centaur VHF flight data system. VHF data are received by the AFETR VHF facilities and transmitted by landline to the blockhouse. The Centaur data is processed at the ETR facility and transmitted to the blockhouse by landline. The Centaur VHF landline receiver accepts serial data from the GFE landline, amplifies it and transmits it to the Centaur VHF data buffer 3.2.3.9.

3.2.3.9 Centaur VHF Buffer

The Centaur VHF buffer unit receives serial data from ETR VHF facilities via the landline and CENTAUR data receiver. It stores the data so that the DPAF can acquire the data at an internally clocked rate and upon command from that unit shifts the information in parallel. The buffer unit has store and sync extraction capability only. No fixed logic is required beyond this, because all additional logic is accomplished by the program stored in the data processing and formatting unit. The buffer unit does not require operator monitoring.

3.2.3.10 Data Processor and Formatting Unit (DPAF)

A general-purpose digital machine with input/output equipment is required. Processing speed and memory of most machines currectly on the market are adequate for LCE purposes. However, because the machine is a general purpose machine, it may well be desired to use it for other purposes when the LCE in the blockhouse (or the LCE in the van) is not in use. The machine will be provided to the contractor as GFE. It is recommended the machine used be identical to its counterpart in the DSIF Sta. No. 71.

3.2.3.11 Recorder Complex

It is necessary to have permanent recording capability in the LCE. Permanent storage is necessary for later data retrieval to evaluate trends and anomalies and permanent visual readout is helpful to launch operators. The DPAF serves as a memory bank for items of a relatively current nature but as certain types of data accumulate, it must be recorded in a form suitable for DPAF input and in a form(s) suitable for operator input.

The recorder complex records all data from the flight data system and selected time samples from continuous monitors for reinsertion in the DPAF.

The recorder prints out in alphanumeric format, all flight data samples and certain selected continuously monitored variables. Time-based plots of certain critical variables are required, upon command of the DPAF. The recorder complex is comprised of magnetic tape I/O equipment, printers and two axis plotters.

3.2.3.12 Data Process and Record Mode Control Console

The DPAF retains commands and appropriate responses in memory or peripheral storage but depends upon the control console for instructions as to when and what types of commands to issue and what responses to expect. The console accomplishes the general function of activating the LCE (Both in the blockhouse and in the transportable configuration) or in putting the DPAF on the job of batch processing of trend data. In

addition to the control for activation of the DPAF and other units of the LCE the central console incorporates a command generation unit to select commands to be sent to the DPAF for formatting and a command response unit to display decided commands from the same unit. It is intended that all communication between the PV and the LCE be controlled from this unit.

3.2.3.13--Planetary Vehicle Monitor Console

The console (See Figure 3.2-4) displays PV status obtained from the two flight data acquisition systems, the hard wire umbilical and the non-Voyager portion of the launch complex. Overall PV status is maintained as well as the individual status of the fifteen major subsystems. Certain critical functions such as PV power readiness and launch time are mentioned as well as the subsystems.

This console is specified as the station of the chief PV launch coordinator and the console functions are restricted, as much as possible to those of monitoring status rather than stimuli generation and response evaluations. Checkout functions are recorded at the console in near real time if they are sufficiently critical.

3.2.3.14 Operational Display

At the subsystem monitor panels it is necessary to communicate certain information concerning Planetary Vehicle subsystem status and command and stimuli responses to launch operations. This will be done visually to avoid possible interference.

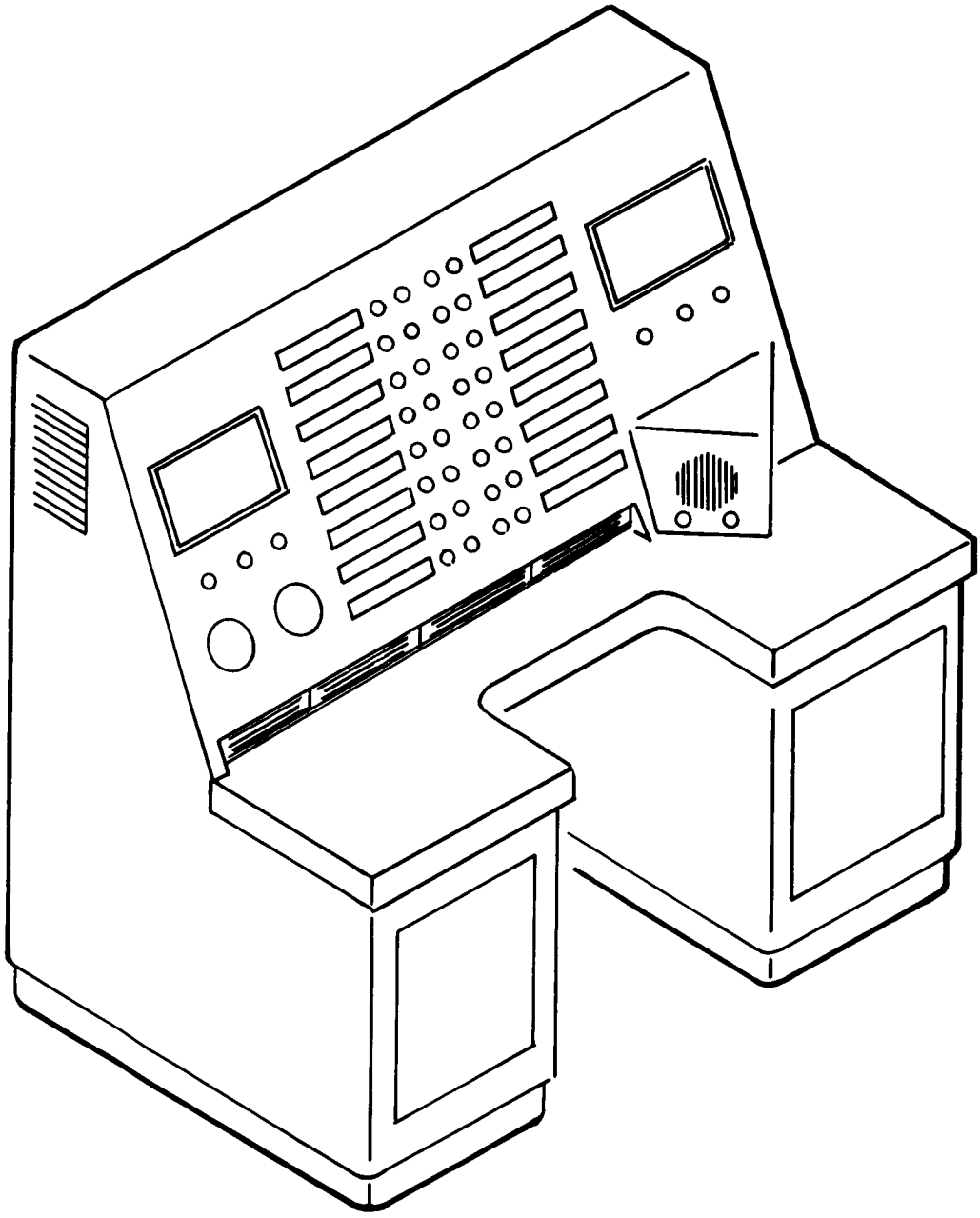

Figure 3.2-4: Planetary-Vehicle Monitor

The information pertaining to a particular subsystem will be grouped so that the complete status of that subsystem is quickly made evident. This applies to the functions monitored through the unbilical as well as monitored telemetered data.

The Data Processor and Formatting Unit (DPAF) provides a storage for current real time status. Information is provided by the DPAF on request. This would be the latest information in storage. Most information is available to the DPAF on a rather limited sampling basis. Umbilical information can usually be obtained by the DPAF as often as the DPAF wishes to scan the input lines. The data available through the flight data (telemetry) system are sampled at once per minute, once every ten minutes and once every twenty minutes rates.

Technical Approach--It is desired to display status subsystem-by-subsystem whenever possible. Some Planetary Vehicle subsystem may warrant as high as thirty periodically updated status displays. Rather than requiring an operator to monitor and make comparisons for thirty (or more) sets of data, the displays provide go-no go indications with call up of quantitative data available when a problem appears. Hence most if not all signals will have an easily observable status indicator which verifies that the monitored parameters are within pre-assigned tolerance values.

The source information is in a variety of forms. Some indications are discretes whose representation may only be "go-no go" or "on-off"

indicators. Most are analog type measurements in which quantitative values are of interest.

The standard status module is illustrated in Figure 3.2-5. This module receives coded information at intervals from the DPAF which indicates positively:

1) Fault;

2) $\overline{\text{Fault}}$;

3) Range.

"Fault" indicates that the value of the monitored parameter is unacceptable and if not rectified will scrub the flight.

"$\overline{\text{Fault}}$" indicates that the quality of the monitored component is acceptable for flight.

"Range" indicates that the values of the monitored component is within some preprogrammed range. (This range presumably may be set from accumulated trend data.)

Separate Fault - $\overline{\text{Fault}}$ (go-no-go) indications are provided to preclude the occurrence of an undetected standard status module failure. (Where for example the module fails in a $\overline{\text{Fault}}$ mode).

The standard numeric module is illustrated in Figure 3.2-6. The standard numeric module incorporates these three decimal digit displays which provide the subsystem monitor operator with:

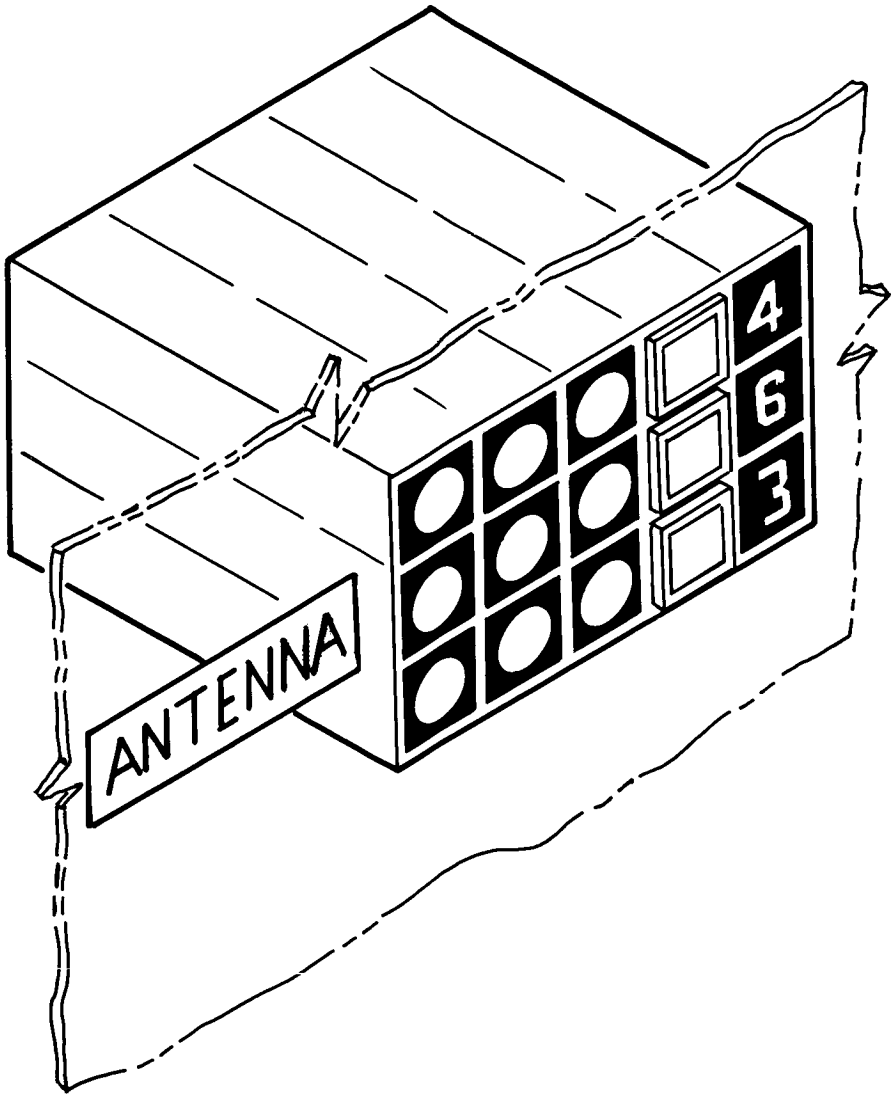

Figure 3.2-5: Standard Status Module

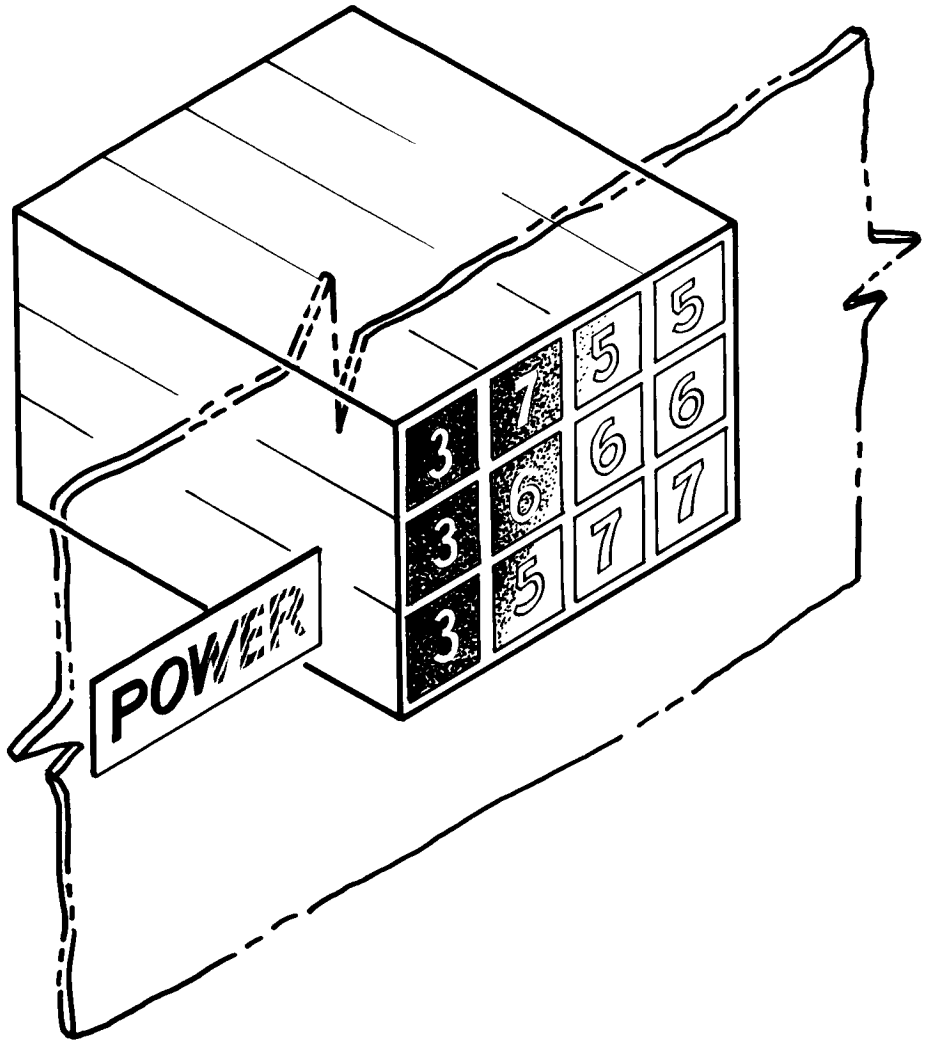

Figure 3.2-6: Standard Numeric Module

1) The upper limit of the variable

2) The latest value of the variable available to the DPAF

3) The lower limit of the variable

The variable identifier is manually installed on the display face of the standard numeric module by the subsystem monitor operator at the time the status data is gated to the module.

3.2.3-15 Subsystem Monitor Panels

The functional description given below is applicable to the following subsystem monitor panels (SSMP):

1) Radio;

2) Telemetry and data storage:

3) Antenna;

4) Attitude reference;

5) Autopilot;

6) Science payload;

7) Thermal control;

8) Propulsion;

9) Reaction control;

10) CC&S;

11) Power;

12) Capsule.

The monitor panels for the subsystems listed above will continuously monitor, in near real time, information available from the flight data systems. This data will be derived from Centaur or Voyager data transmission systems. Specific measurement status, as well as allowable

range information, will be available. Top level subsystem status visual displays will be provided to the monitor panel operators as well as to the planetary vehicle monitor console operator.

Figure 3.2-7 is a tabulation of measurements whose status shall be constantly displayed on the Standard Status Module.

Standard Numeric Modules will be provided also, in the Subsystem Monitor Panels (see Figure 3.2-8) in the quantities given in Figure 3.2-7.

The grouping of the SSMP per display unit is as follows:

1) One display unit; 3.2.3.14,-.15, -.16
2) One display unit; 3.2.3.17, -.18
3) One display unit; 3.2.3.19, -.20
4) One display unit; 3.2.3.21, -.22
5) One display unit; 3.2.3.23
6) One display unit; 3.2.3.24
7) One display unit; 3.2.3.25

3.2.3.16 Data Processor and Formatting Unit Software

Computer programs must be provided for the LCE function as well as for the verification of other software in the program.

3.2.3.17 S-Band Antenna/Diplexer

At the Magnetic Mapping Facility in the ESA, it is necessary to transmit commands to and receive responses and flight data from the Planetary

ITEM	SUBSYSTEM	STD. STATUS MODULE & MEASUREMENT	STD. NUMERIC MODULE TOTAL	PARAMETER UNIT	PARAMETER RANGE	SAMPLING RATE (SAMPLES/SEC.)
3.2.3.14	Radio	Exciter output power	2	Osc. pwr	0-2W	1/600
		Crystal OSC temp. (oven)		Temp.	25°-150°F	1/1200
		Receiver A temp.		Temp.	150° ± 150°F	1/1200
3.2.3.15	Telemetry and Data Storage	Recorder "A" Press	3	Xport press	0-4 psia	1/1200
		Recorder "B" Press		Xport press	0-4 psia	1/1200
		Recorder "A" Temp.		Temp.	± 150°F	1/1200
		Recorder "B" Temp.		Temp.	± 150°F	1/1200
3.2.3.16	Antenna	Low gain ant. RF input	2	RF pwr	0-50 W	1/600
		High gain ant. motor temp. (H-1)		Temp.	± 300°F	1/1200
		High gain ant. motor temp. (S-1)		Temp.	± 300°F	1/1200
3.2.3.17	Attitude Reference	Star Presence Signal (6 channels)	2	Intensity, Magnitude	-2.5 to 46	1/60
		Canopus Track Power		Cond.	Yes/No	1/600
		Canopus sensor temp.		Temp.	± 150°F	1/600
3.2.3.18	Autopilot	Roll gyro error	4	Angle	± 2°	1/60
		Pitch gyro error		Angle	± 2°	1/60
		Yaw gyro error		Angle	± 2°	1/60
		Roll gyro rate		Angle rate	± 2°/sec	1/60
		Pitch gyro rate		Angle rate	± 2°/sec	1/60
		Yaw gyro rate		Cond.	Yes/No	1/600
		Accelerometer Power		Sync	?	?
		Roll spin motor		Cond.	Yes/No	1/600
		Pitch spin motor		Cond.	Yes/No	1/600
		Yaw spin motor		Cond.	Yes/No	1/600
3.2.3.19	Science Payload	Science equipment temperatures	10	Temp.	--	1/1200
		Science equipment voltages		Volts	--	1/1200
		Science equipment currents		Amps	--	1/1200
3.2.3.20	Thermal Control	Coldplate 1 temp.	2	Temp.	± 150	1/1200
		Coldplate 2 temp.		Temp.	± 150	1/1200
		Coldplate 3 temp.		Temp.	± 150	1/1200
		Coldplate 4 temp.		Temp.	± 150	1/1200
		Coldplate 5 temp.		Temp.	± 150	1/1200
		Coldplate 6 temp.		Temp.	± 150	1/1200
		Coldplate 7 temp.		Temp.	± 150	1/1200
		Coldplate 8 temp.		Temp.	± 150	1/1200
3.2.3.21	Propulsion	Gas supply pressure	4	psia	0-4000	1/60
		Fuel Tank Pressure		psia	0-400	1/60
		Oxidizer Tank Pressure		psia	0-400	1/60
		Gas Supply Temp.		°R	300-600	1/60
		Gas Supply Temp.		°R	300-600	1/60
		Fuel Tank Temp.		°R	400-600	1/600
		Fuel Tank Temp.		°R	400-600	1/600
		Oxidizer Tank Temp.		°R	400-600	1/600
		Oxidizer Tank Temp.		°R	400-600	1/600
3.2.3.22	Reaction Control	A/C Tank #1 Pressure	3	psia	0-375	1/60
		A/C Tank #2 Pressure		psia	0-375	1/60
		Jet Driver pitch +		Cond.	Yes/No	1/1200
		Jet Driver Pitch -		Cond.	Yes/No	1/1200
		Jet Driver Yaw +		Cond.	Yes/No	1/1200
		Jet Driver Yaw +		Cond.	Yes/No	1/1200
		Jet Driver Roll +		Cond.	Yes/No	1/1200
		Jet Driver Roll -		Cond.	Yes/No	1/1200
		A/C Gas Temp. #1		Temp. Farenheit	± 150°	1/1200
		A/C Gas Temp. #2		"	± 150°	1/1200
3.2.3.23	CC&S	Command Magnitude Ident.	5	Mode		
				Cond.		
		Processor #1 or A 2		Mode		
				Cond.		
		Command Decoder #1 or A 2		Mode		
				Cond.		
		Programmer Data		Mode	Instruct	
				Cond.	Words	1/60
		Programmer Parity		Ind.	Yes/No	1/60
		Vehicle Time		Time	233 hrs.	1/60
		Command Verify		Verify	Command Word	1/60
		A/C Mode Select		Mode Cond.	Yes/No	1/60

Figure 3.2-7: Subsystem Monitor Panel Measurement Displays

ITEM	SUBSYSTEM	STD. STATUS MODULE & MEASUREMENT	STD. NUMERIC MODULE TOTAL	PARAMETER UNIT	PARAMETER RANGE	SAMPLING RATE (SAMPLES/SEC.)
3.2.3.24	Power	Battery 1 Temp.	10	Temp.	±150°F	1/1200
		Battery 2 Temp.		Temp.	±150 F	1/1200
		Battery 3 Temp.		Temp.	±150 F	1/1200
		Power Conditioner Temp.		Temp.	±150 F	1/1200
		Regulator B Output I		amperes	0-10A	1/600
		DC/AC Inv. Output I		amperes	0-10A	1/600
		DC/AC Inv. Failure		On/Off	-	1/600
		DC/AC Inv. Output		Volt	0.55V	1/600
		3 ϕ Inv. Output V (ϕ 1)		Volt	0.26V	1/600
		3 ϕ Inv. Input I		ampere	0.10A	1/600
		1 ϕ Inv. Output V		Volt	0-28V	1/600
		1 ϕ Inv. Output I		ampere	0-10A	1/600
		Power Sync Frequence		cycles/sec	400 + 2 aps	1/600
		PS & L Input I		amperes	0-30A	1/60
		PS & L Output I		amperes	0-30A	1/60
		PS & L Output V		Volt	0-150V	1/60
		Regulator A Output I		amperes	0-10A	1/600
		Battery S-1 Voltage		volt	0-50V	1/60
		Battery S-2 Voltage		volt	0-50V	1/60
		Battery S-3 Voltage		volt	0-50V	1/60
		Battery S-1 Discharge I		amperes	0-15A	1/60
		Battery S-2 Discharge I		amperes	0-15A	1/60
		Battery S-3 Discharge I		amperes	0-15A	1/60
		Battery 1 S/C Charge I		amperes	0-15A	1/60
		Battery 2 S/C Charge I		amperes	0-15A	1/60
		Battery 3 S/C Charge I		amperes	0-15A	1/60
		Battery Charger I		amperes	0-15A	1/60
		Ground Power Voltage		volts	0-50V	Constant- Computer clocked
		Battery Charger #1 Current		amperes	0-30A	Constant
		Battery Charger #2 Current		amperes	0-30A	Constant
		Battery Charger #3 Current		amperes	0-30A	Constant
		DC/DC Failure Unit A Sense Mode		On/Off		1/60
		DC/DC Failure Unit B Sense Mode		On/Off		1/60
3.2.3.25	Capsule	To be added				

Figure 3.2-7: Cont. Continued

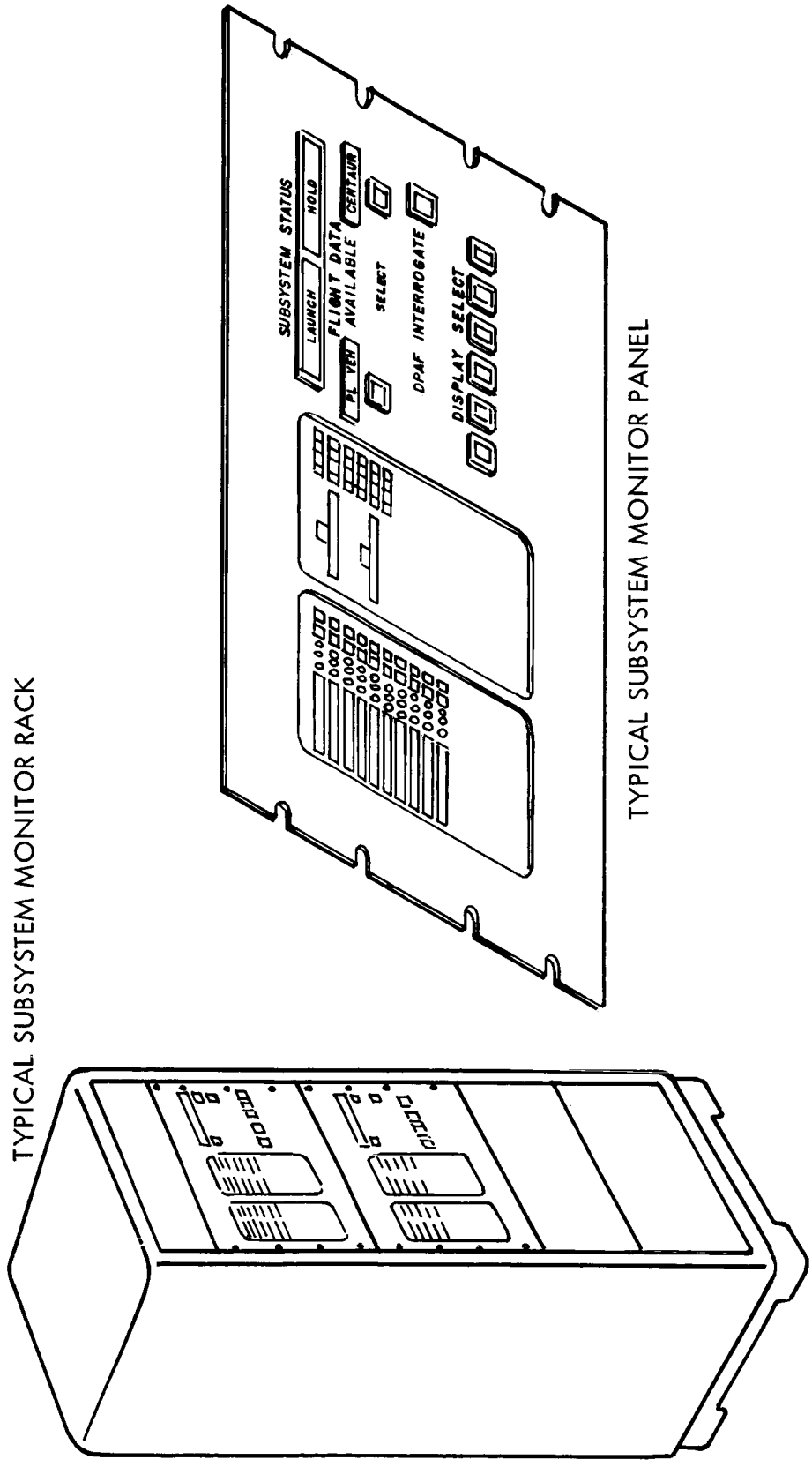

Figure 3.2-8: Typical LCE Subsystem Monitor Rack and Panel

Vehicle by the rf data link. The S-band system is used open loop to preclude any effects the presence of a coaxial cable might have on the magnetic field. A small directional antenna suitable for S-band is used with a diplexer to provide for two-way communication between The Planetary Vehicle and the transportable LCE. The antenna is mounted on a portable stand and is capable of being trained in elevation and azimuth.

3.2.3.18 Interconnecting Cabling ESA

This item provides all electrical paths necessary to complete links between the LCE and the ground power system. It specifically includes conductors for blockhouse type power, grounding, and control signals.

3.2.3.19 Portable Air Conditioning Unit

A portable air conditioning unit will be provided to supply cooled air or nitrogen to the spacecraft or PV during all periods from the departure of the PV from the industrial area, through ESA operations and transport to the launch pad. This item will be capable of supplying air or nitrogen at adjustable temperatures and flows compatible to the PV's requirements. Mounting and power provisioning will be such that the unit may accompany the flight article(s) wherever needed. The air temperature in the shroud as maintained at $45^{o}F \pm 5$ with air at a relative humidity at that temperature ($40^{o}F$) of 50 percent maximum and with gas cleanliness per Federal Standard 209, Class 100,000.

3.2.3.20 Interconnecting Cabling, LCE

Power and signal cabling must be provided between the LCE (blockhouse and transportable) equipments. In addition, the LCE interconnecting cabling must make the signal and power interface with the other blockhouse equipment for power, range time and other countdown information contained in the blockhouse.

3.2.3.21 Portable Cooling Unit

A portable cooling unit will be provided to maintain a proper flow (closed loop) of cooling gas or other working fluid to the encapsulated PV during the time required to lift the PV from the transporter at the launch pad (service structure) and emplace it on the launch vehicle. The unit will be self-contained except for electrical power to operate the unit's mechanical equipment. The spacecraft temperature is maintained at $45^{o}F \pm 5$ during all uses of this unit. Provisions are made for rapid change-over during installation to other environmental control units dissipation of possible capsule RTG waste heat.

3.3 SYSTEM TEST COMPLEX

The Voyager System Test Complex (STC) includes all electrical and mechanical elements necessary to support subsystem and system testing of the spacecraft. Adapters and other STC category equipments are required that will allow the basic STC to be used in various test configurations and locations such as Goldstone, magnetic mapping, space chamber and ESA testing.

3.3.1 Equipment Identification and Usage

The basic STC is the operational unit as diagrammed in Figure 3.3-1 and contains or uses the following major elements:

1) DSIF MDE to perform the functions of spacecraft command insertion into the transmitter/modulator and telemetry demodulation, decommutation, and formatting for on-site data processing.
2) All subsystem test sets as described in Section 4.0 of this document modified as required for integration into the STC.
3) Environmental cooling facilities to support the test operations on the Voyager Spacecraft.
4) A central control element to maintain system test control and data recording.
5) Electrical power system to provide spacecraft electrical ground power.
6) Three axis test stand to support specialized spacecraft system tests (AHSE).
7) Subsystem and spacecraft simulators to permit system interface and parallel subsystem testing.
8) Personnel intercommunication system.

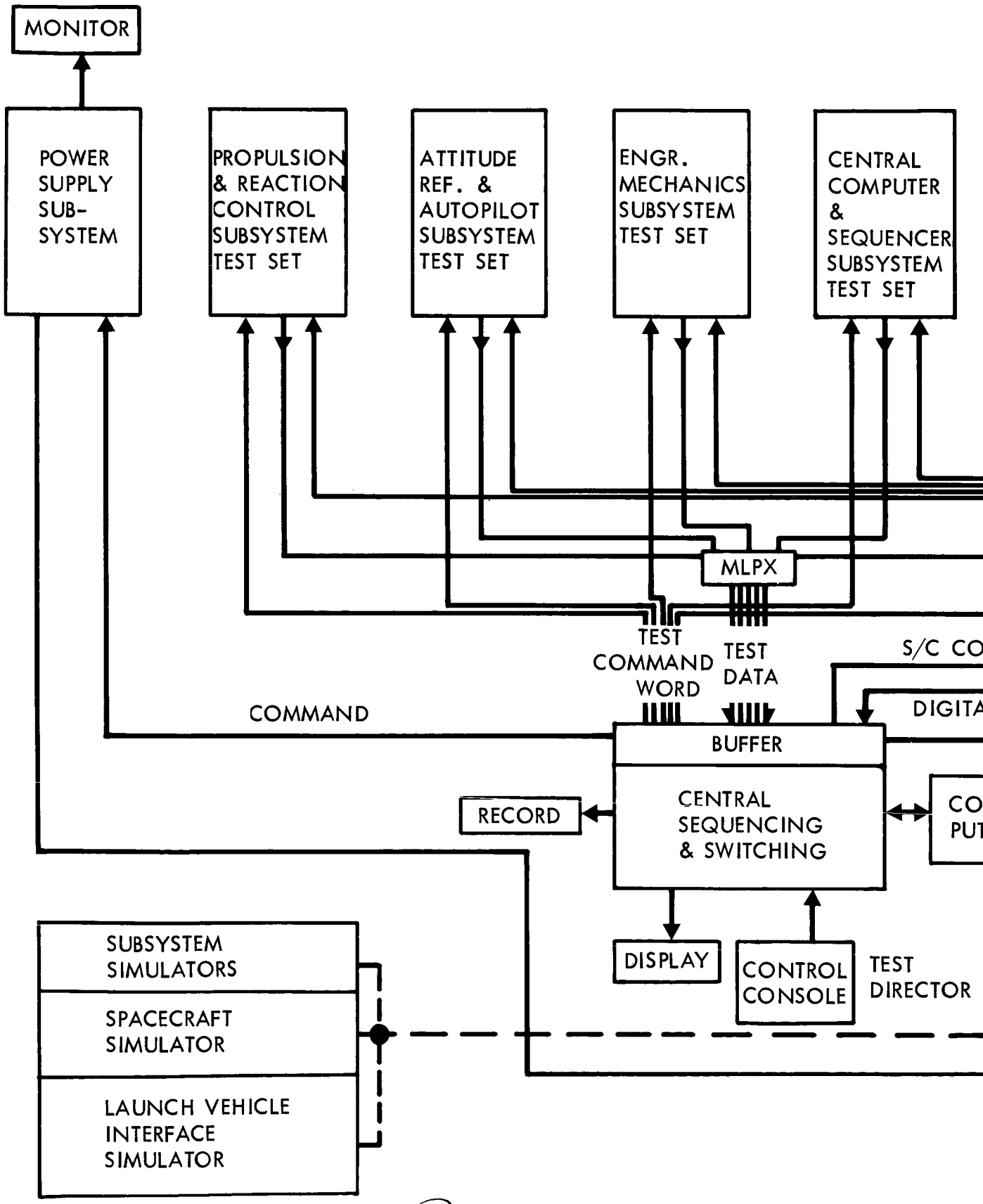
MONITOR
POWER SUPPLY SUB-SYSTEM
PROPULSION & REACTION CONTROL SUBSYSTEM TEST SET
ATTITUDE REF. & AUTOPILOT SUBSYSTEM TEST SET
ENGR. MECHANICS SUBSYSTEM TEST SET
CENTRAL COMPUTER & SEQUENCER SUBSYSTEM TEST SET
MLPX
TEST COMMAND WORD
TEST DATA
S/C CO
DIGITA
COMMAND
BUFFER
RECORD
CENTRAL SEQUENCING & SWITCHING
CO PUT
DISPLAY
CONTROL CONSOLE
TEST DIRECTOR
SUBSYSTEM SIMULATORS
SPACECRAFT SIMULATOR
LAUNCH VEHICLE INTERFACE SIMULATOR

79 Ø

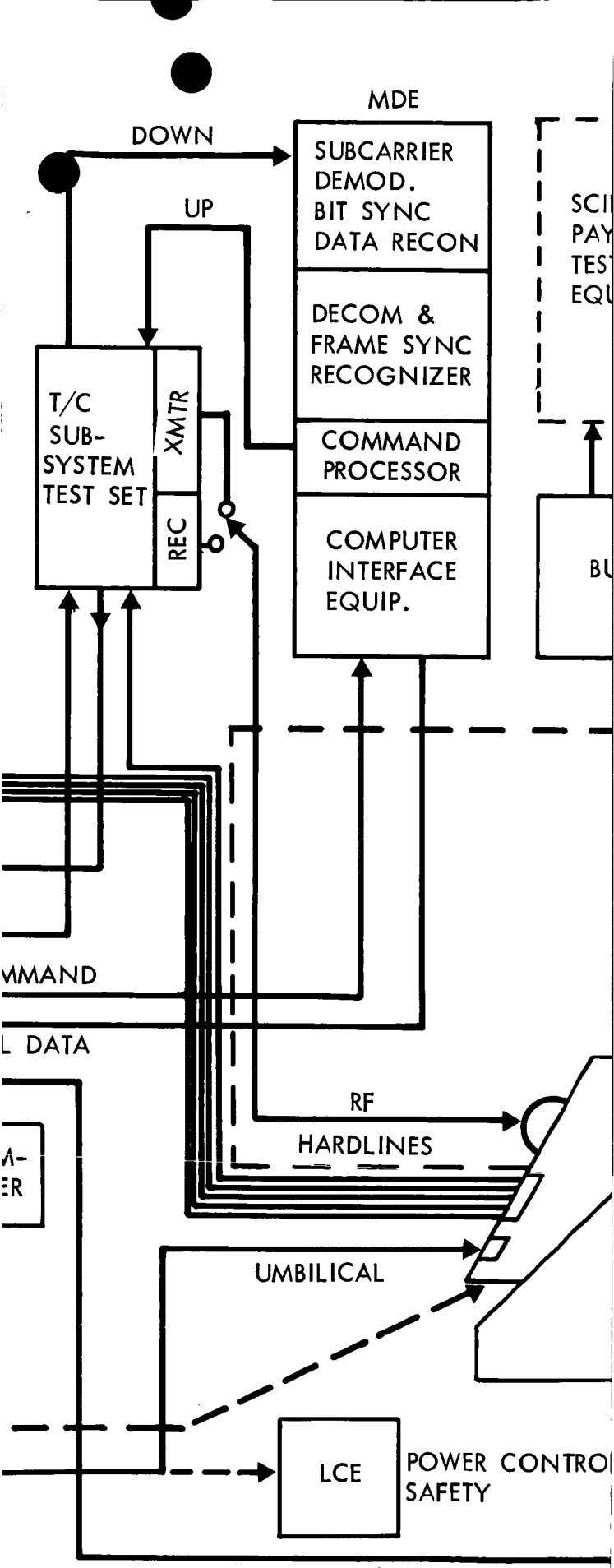

Figure 3.3-1: Sy

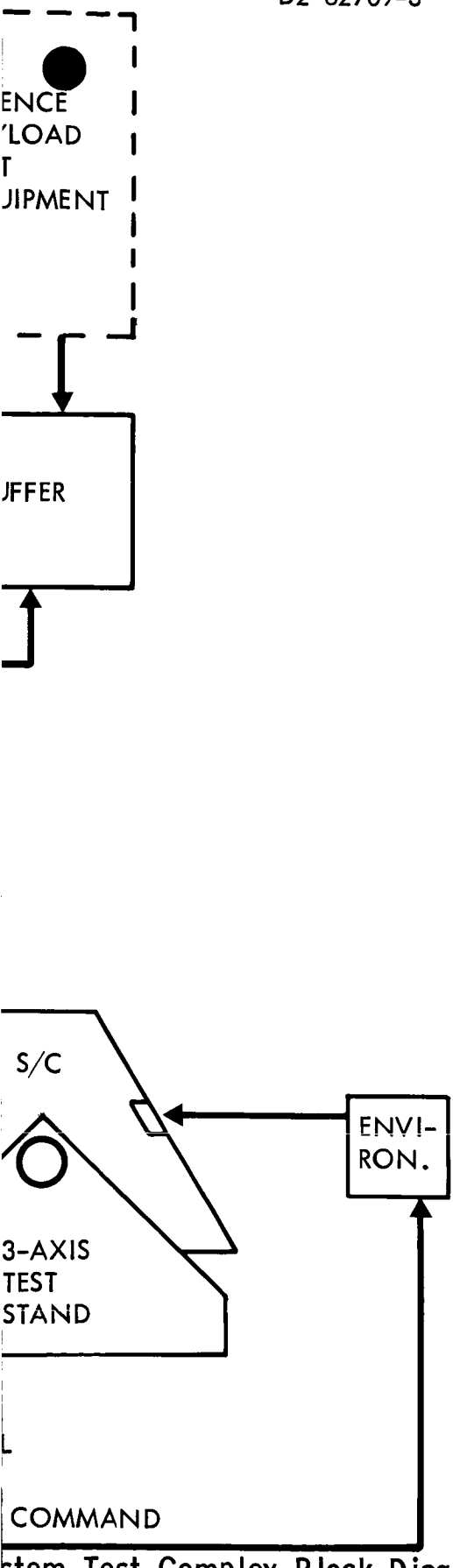

stem Test Complex Block Diagram

The STC exercises the spacecraft through all standard and backup modes of operation. In addition, the STC provides the capabilities to adapt to non-standard conditions and to permit spacecraft fault isolation to the field spare level. Wherever possible the physical configuration of the STC is such that all of the major elements, as indicated above, will be located in one area. However, the STC design will permit physical separations between the test article and the test equipment when only a portion of the STC category equipment is required.

To accomplish the system developmental and integration testing of the Voyager Spacecraft, a "completely" automatic STC is neither justified nor desirable. This conclusion is based on the numbers of systems to be tested, complexity of tests, equipment costs, test programming costs, and equipment configuration development time.

One of the primary requirements at the subsystem test set level is for repeatable controlled test sequences and data readout for off-line trend analysis. Because of this, the subsystem test sets that perform the basic STC test functions have, inherent in their design, significant automatic test sequencing, data recording, and limited data evaluation and display capabilities. These characteristics are used to their maximum extent within the STC.

Environmental control of the spacecraft includes the use of an air conditioned clean room that is controlled to $72^{\circ} \pm 3^{\circ}$F. During system tests in this area, a supply of air or nitrogen gas is ducted into the spacecraft. The gas supply temperature range is adjustable between 45°

and 75°F, with a flow rate up to 25 pounds per minute at 10 inches H_2O STP, a relative humidity less than 50 percent, and cleanliness meeting Federal Standard 209, Class 100,000.

An electrically heated nitrogen vaporizer supply of cold gas is required for testing the Science Payload IR sensors. This gas should be between -25° and -45°F, at less than 50 percent relative humidity. The flow rate should be adjustable from 0 to 0.5 pounds per minute and cleanliness should meet Federal Standard 209, Class 100,000.

Preliminary analysis associated with determining the design characteristics of the STC central control unit indicate some specific results. These are:

1) A central automatic test sequence control, data recording and limited data evaluation and display capability is required at the STC. This follows because of the identical requirements at the subsystem test level and because of the need to provide total system test control with respect to test programming and safety interlock.
2) The requirements for performing full operation flight simulation tests imply a more comprehensive flight simulation test that can be readily made if a DSIF on-site data processing subsystem is included within the STC.
3) Implementation of Item #2 will provide the capability within the STC to checkout all DSIF operational software programs that are described in Section 3.1 of this document.
4) Implementation of Item #2 will provide the capability to perform off-line trend data analysis in the STC on a priority basis.

In order to meet the STC operational requirements as described above, an SDS-920 computer or equivalent is required as a part of the central control unit. This satisfies the requirement for providing an automatic system level test sequencing and recording capability and limited real-time data evaluation and display. In addition, it provides functional growth for expanded automatic test capabilities consistent with future Voyager program direction.

3.3.2 Design Concepts and Constraints

The basic purpose of the STC is to provide the capability of performing comprehensive testing of the spacecraft with and without the Science Payload and Flight Capsule. Section 2.2 of this volume presents overall concepts which are observed in the STC design. Some of the more detailed restraints for the STC design are included herein. They are:

1) The STC is designed for automatic test sequencing with provision for manual override to obtain the required high degree of test repeatability while maintaining the ability to do single step sequencing for mission and test hardware, trouble shooting, and fault isolation.
2) The STC will have the capability to ascertain spacecraft performance, including fault isolation to the subsystem level, through analysis of the quantitative information received via the radio telemeter.
3) The STC is designed to use, where possible, equipment components that are electrically and mechanically identical to those of the subsystem test equipment.
4) Hardware circuitry design in the STC is identical, in all possible cases, to the designs in the MDE and LCE.

5) All system level tests including compatibility, FAT, TAT, and final assembly tests are accomplished using the STC. Adequate measurements through hardwire and telecommunications must be provided for test, monitor, and control.

6) System level end-to-end testing is performed by the STC on the basis of telemetry flight data measurements and hardwire monitor and control measurements.

7) During system level tests, the spacecraft is tested in several modes, times, and conditions. Test operations require the support of facilities (e.g., environment, magnetic field control, etc.), MDE, AHSE and selected SSTE.

8) The STC equipment will be designed with the team concept in mind. That is, it will be designed for maximum utility by the team of engineers and technicians which moves with the flight hardware and test equipment from completion of assembly and fabrication through mission completion.

9) The processing of telecommunications commands and data will be done by a simulated DSIF which will include configurations identical to MDE hardware and software at the DSIF.

10) Electrical power to the spacecraft is furnished through the spacecraft umbilical circuits except when the batteries or solar panels are being exercised. The cable carrying test circuits and electrical power to the spacecraft simulates the impedance of the LCE umbilical cable.

11) Except where mandatory, the basic spacecraft wiring harness will not be opened or disconnected when testing subsystems in an assembled spacecraft. All electrical power to the subsystem under test will

be applied through the spacecraft electrical simulator.

12) The STC design is transportable as an entity whose major assemblies have simple electrical interfaces thus facilitating movement and reassembly of the equipment in a manner to minimize time required for setup, recalibration, realignment and use.

3.3.3 Applicable Documentation

1) Functional Specification OSE/MC-3-110, dated June 17, 1963, "Mariner C, Operational Support Equipment Design Characteristics and Restraints"
2) Functional Specification DFI-1061-FNC, "Deep Space Network On-Site Data Processing Subsystem"

3.3.4 Functional Description

The STC equipment is used to checkout the Voyager Spacecraft and to verify DSIF MDE hardware, software, and spacecraft compatibility in operational mode and configuration. The overall functional block diagram is shown in Figure 3.3-1 and a typical module block diagram is depicted in Figure 3.3-2. The functional description of the STC is divided into the following categories:

1) Test control.
2) Test data routing and evaluation.
3) Test data display and storage.
4) DSIF software checkout.

3.3.4.1 Test Control

Testing will be accomplished in one of two operational modes; the "program controlled" or the manual mode. In the program control mode, a computer

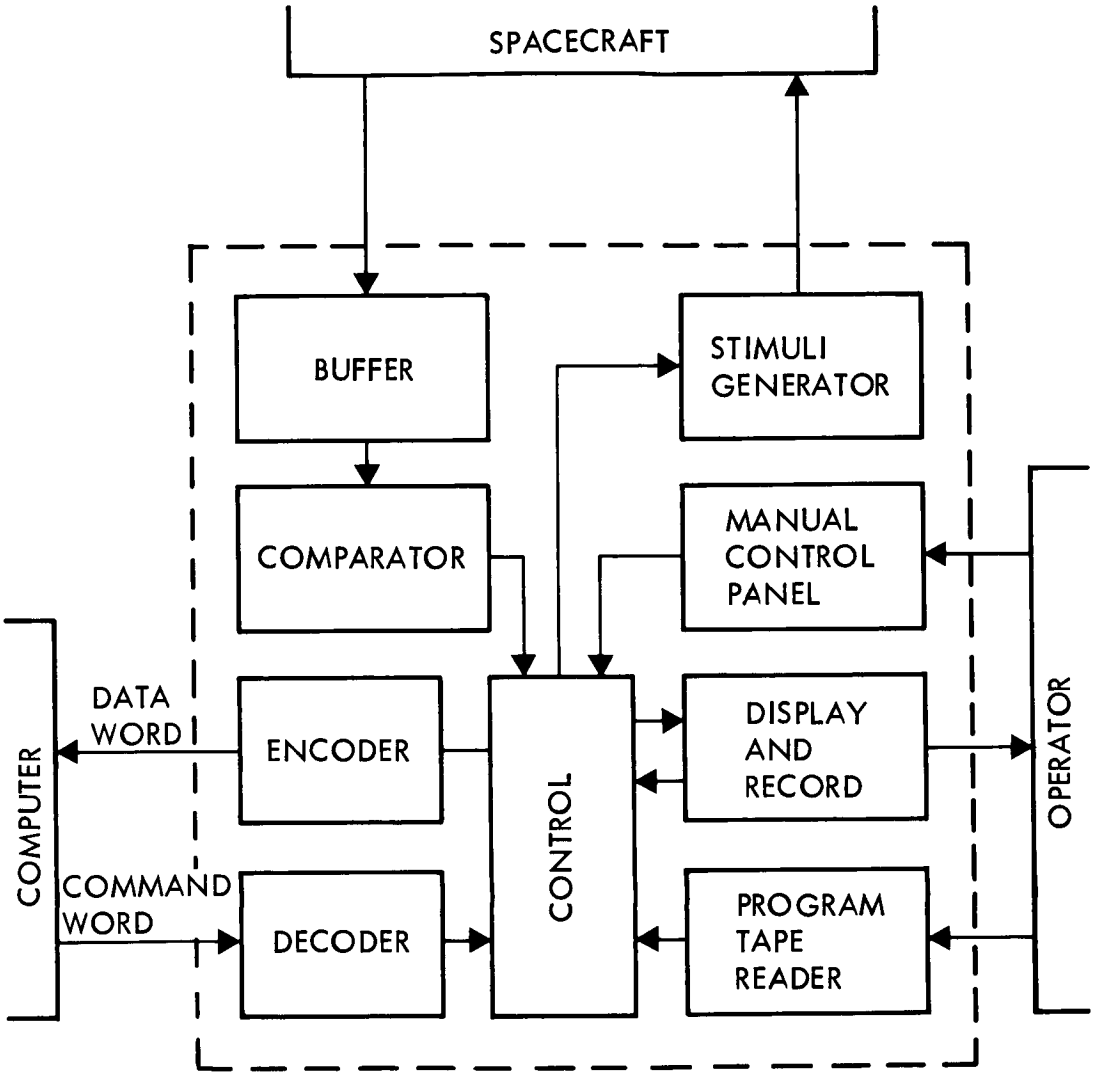

Figure 3.3.2: Typical Subsystem Test Set Configuration

will initiate, sequence, route, evaluate and display all data coming from or going to the spacecraft. Stimuli commands will be sent under test program control to the individual subsystem test sets which generate the stimuli. The stimuli will, in turn, be routed to the spacecraft via hardline connections in a manner identical to that used for subsystem level testing. Commands being sent to the spacecraft CC&S are transmitted from the computer to the command processor portion of the MDE, routed to the transmitter in the telecommunications test rack and transmitted via an RF link to the spacecraft. This provides communication link similar to that used during DSIF operations. Resulting data are analyzed and routed to a central display.

In the program control mode all test data will be evaluated by the computer at a rate determined by the system under test. An alternate mode would be to manually sequence individual test steps at the discretion of the test operator.

During manual test operation the computer will maintain overall test control to ensure that safety inter-locks for electrical power and environmental control are maintained, to minimize mutual interference, and to control gross test scheduling. However, the insertion of subsystem and spacecraft commands and stimuli and the evaluation of the resulting test data will be done on an individual basis at each subsystem test set by the test engineer. In this mode, the existing subsystems test equipment configurations and local displays are used.

3.3.4.2 Test Data Routing and Evaluation

All test data is received from the spacecraft via cabling, RF coax, and open loop RF depending on the type of tests being conducted and the specific test mode. Test cable connections from the spacecraft are routed to the appropriate individual subsystem test set racks using the same pin connections that are utilized during bench level testing.

In the "program control" test mode the test data is encoded at the test sets for routing by hardwire to the computer multiplexer and input buffer. All data evaluation is done automatically by the computer except on demand and under program control when it is necessary to modify the program and implement manual evaluating procedures. Test data transmitted via the RF link use an antenna coupler and coaxial cables except when specialized tests require open-loop RF radiation transmissions. The RF test data is fed into the S-band receiver located in the telecommunications test rack. The output of the receiver is routed to the MDE for subcarrier demodulation, frame and bit synchronization, and buffering into the computer for real time processing.

During "manual mode" operation, overall test program control (as described in the previous section), is maintained by the computer. However, tests are programmed on an individual basis by test engineers located at each subsystem control station. The telemetry data is routed to the telecommunications rack where it is received, demodulated, decommutated and displayed to the test engineer at the subsystem control station.

3.3.4.3 Test Data Display and Storage

The test data resulting from the previously described operation are displayed for operator recognition and evaluation in both the automatic and manual modes. Sequential test-in-progress indications, status lights, GO/NO-GO lights, and run clock displays are included at the subsystem test sets and the system test control console. The master time clock also provides for operator synchronization of all participants in the system test complex.

In the automatic program control mode of testing, significant test results will be printed out at the computer display console. Out-of-tolerance readings will be flagged to allow the operator to take the required remedial or alternate mode implementation action.

In the manual mode the test results will be displayed and monitored at the individual subsystem test sets.

Test data storage is accomplished by means of magnetic tape recorders, direct writing oscillographs and hard copy print-out records. Data from the spacecraft and the OSE are stored in the required format to verify equipment operational status, permit trend prediction, allow previous test point data recall, retrace equipment test history in event of failure, and to permit off-line detailed engineering analysis. Test data are recorded on magnetic tape by the computer in the program controlled mode of testing and are recorded at the individual subsystem test sets in the manual mode.

3.3.4.4 DSIF Software Checkout

The software programs which are verified by the DSIF on-site data processing subsystem within the STC are written for the DSIF SDS-920 computer. The checkout of these programs represent a major test effort that must be accomplished prior to the DSIF compatibility test program schedule. In addition, during flight simulation tests conducted at the Kent facility, these programs are used for real time processing of all telemetry data received from the spacecraft. Compatibility of the software with the MDE hardware should be fully verified prior to the Goldstone DSIF tests.

3.3.5 Interface Definition

The following interfaces exist for the STC and its component parts:

1) Radio frequency interfaces exists with the spacecraft S-band radio transmitter and receiver. Both radiating and nonradiating (coax plus antenna coupler) modes exist. Another interface exists with the VHF radio receiver.
2) The following interfaces exist with the spacecraft umbilical circuits: electrical power transmission and sensing circuits, safety circuits, and the environment monitor circuits.
3) A digital-data interface exists with the spacecraft-to-Centaur VHF circuits.
4) The science package simulator and the Flight Capsule simulators both interface directly with their associated spacecraft circuits and mounting provisions.
5) The Spacecraft dummy electrical simulator must interface individually and collectively with all the spacecraft electric/electronic modules.

6) The STC external cabling interfaces with all the special test connectors on spacecraft electric/electronic modules.

7) A set of duplicate MDE is integrated into the STC. These equipment items and software programs function during STC system testing in a manner similar to the mission operational phases.

8) The LCE is used at the STC during specific system level tests.

9) AFETR Services--These interface points include communication, power, grounding, electrical interference, facilities and environment.

3.3.6 Safety Considerations

There are three basic safety considerations associated with the design of the STC. These are:

1) Personnel Safety

   a) Personnel safety is provided by the use of electrical interlock on all rack drawers and panels. Electrical design practices will ensure adequate safety margins with respect to locating electrical power supply grounds.

2) Spacecraft Safety

   a) The STC computer must provide interlock functions in addition to that provided by the individual test sets to preclude a test sequence being initiated that is harmful to the spacecraft equipment. Examples of these interlocks are the application of the cooling system prior to specific subsystems operations, inertial platform gyro positions prior to power application, and prevention of subsystem performance due to ground power transients and protection from harmful voltage fluctuations.

b) Command word generation and verification procedures will be thoroughly tested for functional integrity prior to their operational use with the spacecraft.

c) The design of all input circuits to the spacecraft system or any of its subsystems are such that no failure within the STC will cause damage to the spacecraft. All STC to spacecraft interfaces will be so checked successively with the engineering test model, prototype spacecraft, and the Planetary Vehicle Electrical Simulator before using the STC with a flight spacecraft.

d) Electrical ground loops between the spacecraft and STC will be rigidly controlled through use of appropriate design specifications.

3) OSE Safety

a) The design of all OSE is such that in the event of a power failure the reactivation of specific items of equipment will be sequenced in a manner to protect their functional integrity.

b) The selection of cable connectors and location of power supply wiring within the OSE prohibits inadvertent mating of power and signal connections to the wrong element. In the event of an over-load failure on a power lead, adjacent wiring will not be connected to any critical circuits.

3.3.7 Testing

The STC has the self-check and operational checking capability of those basic subsystem test equipments included in STC and as described in Section 4.0 of this document. Some ancillary equipment will be included in order

to assure that calibrations, alignments and ranges are within the required operating limits. The inclusion of computer control, data storage, analysis, and display also allows the STC to isolate its own failures to the replaceable spares level. In the case of test equipment redundancy included with equipment common to LCE the STC has the ability to check standby as well as active circuitry. The STC can accomplish the self checks prior to or during test without interrupting the test sequence.

3.4 ASSEMBLY, HANDLING, AND SHIPPING EQUIPMENT (AHSE)--SYSTEM LEVEL

3.4.1 Scope

System level AHSE includes equipment that serves more than one airborne subsystem or serves other systems OSE. In a number of cases systems AHSE must function or interface with subsystem AHSE; where these conditions exist, the relationships will be described. Not included in AHSE are facility items; GFE, standard manufacturing tooling; and commercial or Government transportion equipment, such as aircraft, vans, fork-lift trucks, and hoists.

3.4.2 AHSE Classes

System-level AHSE includes the following equipment classes:

1) Measurement equipment--mechanical;
2) Test stands and fixtures;
3) Transportation equipment;
4) Safety devices;
5) Work platforms and access equipment;
6) Dollies, trucks, and installation devices;
7) Protective covers;
8) Shipping containers;
9) Lifting slings and fixtures;
10) Assembly jigs, fixtures, and special tools.

3.4.3 Functions Performed

System level AHSE includes items that perform the following functions:

1) Provide the capability of safely lifting, holding, and positioning spacecraft assemblies (or OSE) during system assembly and test.
2) Maintain cleanliness requirements during transportation of systems, OSE, and spacecraft assemblies.

3) Maintain environmental requirements during transportion of systems, OSE, and the various spacecraft assemblies.

4) Provide for transport and handling of Planetary Vehicle assemblies and all systems OSE.

3.4.4 AHSE Critical Parameters

In selecting a given design or approach to a system AHSE solution, a number of general characteristics or criterion are reviewed or applied relative to that solution. A priority listing is established that applies to all equipment classes under the AHSE category. This listing, described in detail under subtitles below, is formulated based on the following assumptions:

1) Proper performance of basic function is not listed as a characteristic because this is assumed the prime reason for creation of a given design.

2) Program-level decisions or general criterion are not listed because these requirements are specified or apply without trade consideration.

3) Many characteristics are not listed because they are a function of cost. Cost itself is listed and needs to be expanded to cover factors that contribute therein.

Personnel Safety--The most important characteristic of all system-level AHSE is its ability to afford personnel protection or provide for safe usage by operating personnel. This feature is incorporated in AHSE by the process of selecting conservative designs, providing safety devices, eliminating operator error sources, reducing risk operations, avoiding

4) Usage cost--the cost per AHSE item for the life of the program is considered, not just acquisition cost.

3.4.5 Equipment Functions and Proposed Design

Preliminary designs for categories of equipment are noted in the following paragraphs.

3.4.5.1 Measurement Equipment--Mechanical

Alignment Stations--An alignment station performs all close-tolerance adjustments and physical placement of the various sensors, reference packages, thrustors, motors, platforms, and structural components. The alignment requirements are shown by Figure 3.4-1. This station positions the spacecraft in the required attitudes to allow all alignments to be accomplished by one station. Optical devices and other state-of-the-art tolerance measurement devices are employed at this station.

A stable, rigid OSE framework is provided. This frame incorporates alignment-device attachments at accurately adjustable points. These alignment devices work in conjunction with adapters furnished as subsystem OSE (i.e., target holders, etc.). Figure 3.4-2 illustrates the conceptual design.

Weight and Balance Equipment--A set of static-weight balance equipment is required for use both in explosive and nonexplosive areas for weight and center of gravity determination and adjustments. This equipment is used for weight and balance measurements of the Spacecraft Bus and other levels of assembly up to and including the Planetary Vehicle with

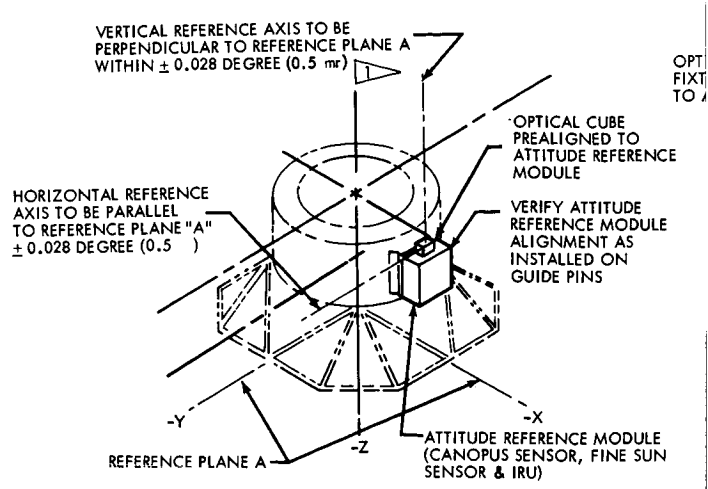

ATTITUDE REFERENCE MODULE ALIGNMENT

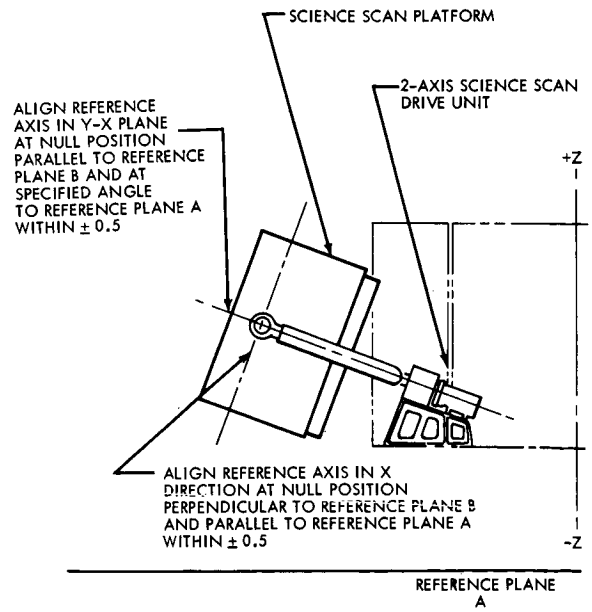

SCIENCE SCAN PLATFORM

1 mr = MILIRADIAN

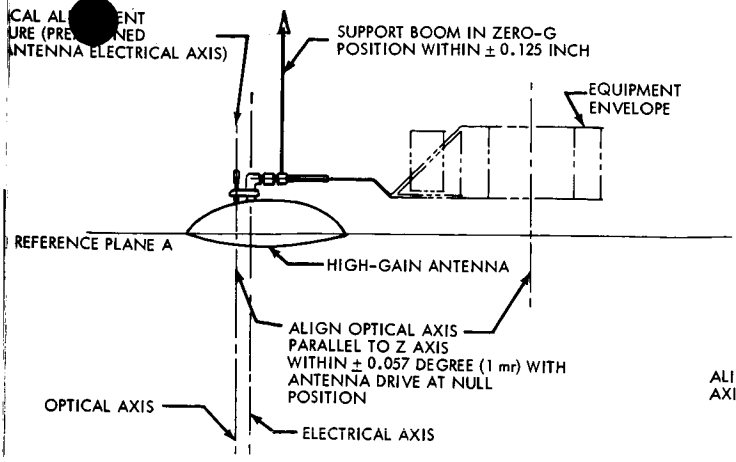

HIGH-GAIN ANTENNA ALIGNMENT

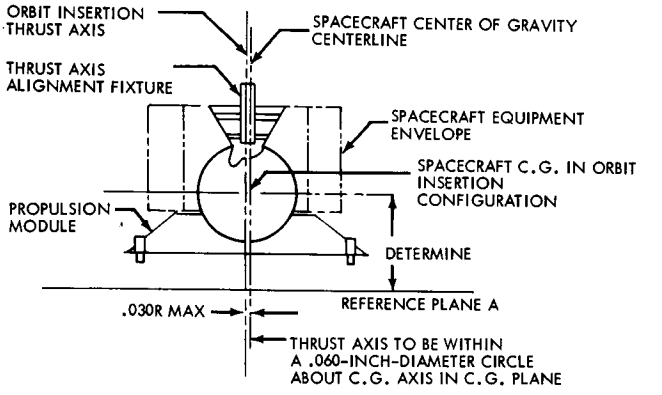

PROPULSION MODULE ALIGNMENT
TO SPACECRAFT

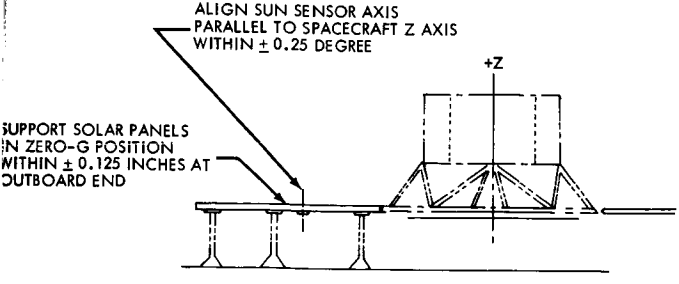

COARSE SUN SENSOR ALIGNMENT

Figure 3.4-1:

89 (2)

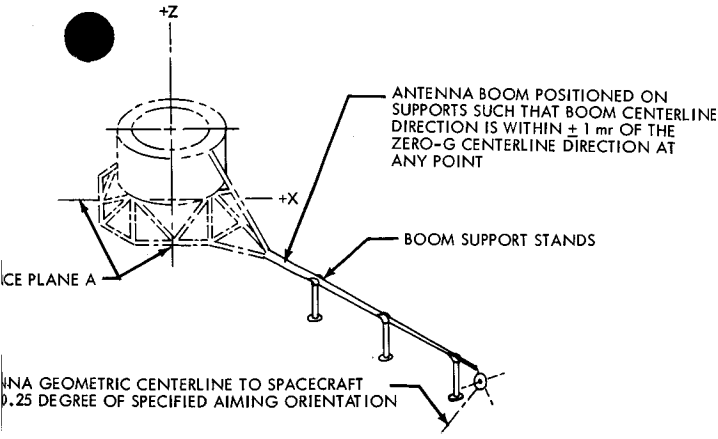

OMNI AND VHF-ANTENNA ALIGNMENT
(OMNI SHOWN)

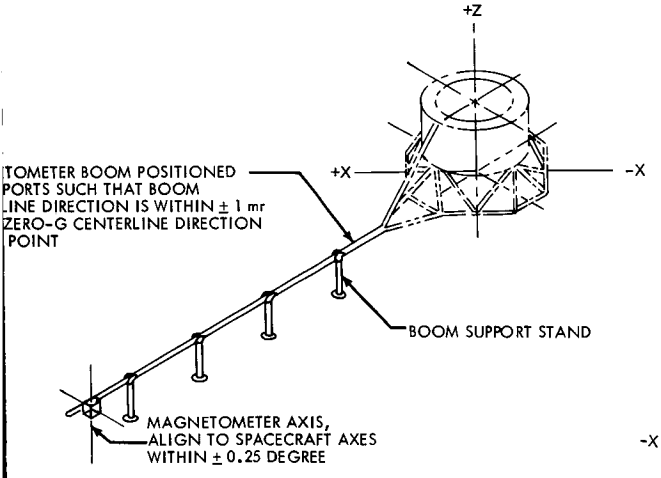

MAGNETOMETER ALIGNMENT

Voyager System Alignment Requirements

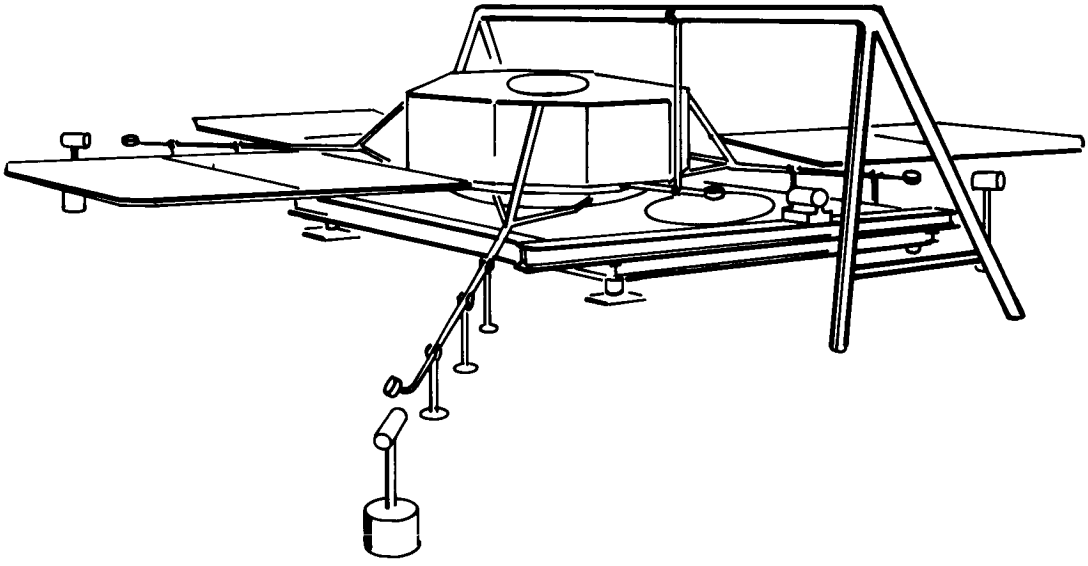

Figure 3.4-2: Mechanism Alignment Station

propellants loaded. The spacecraft is measured and balanced both with mechanisms extended and folded on this station.

A possible solution to this design is described in the paragraph below where the requirements are combined with the rocket motor alignment equipment.

Rocket-Motor Alignment Fixture--A rocket-motor alignment fixture is identified for use to adjust the rocket-engine thrust axis relative to the Flight Spacecraft center of gravity. Conventional optical tooling and physical measurement devices are incorporated in this fixture to effect the required alignment measurements. This fixture operates with subsystem test adapters.

Figure 3.4-3 illustrates a possible design approach that serves both the alignment and weight and balance functions. A combination facility/OSE installation is required where a hydraulic lift from a level below the spacecraft moves the serviced propulsion module into position. The load cells located at four spacecraft support points measure weight and horizontal plane balance. Longitudinal center-of-gravity location determinations are performed as a separate operation prior to propulsion module installation by using adapters to tilt the spacecraft. The rocket-motor thrust vector is aligned by an optical instrument located on a platform over the spacecraft.

An alternate design approach to the same test station is one where the hydraulic elevator is not used (see Figure 3.4-4). The Spacecraft Bus

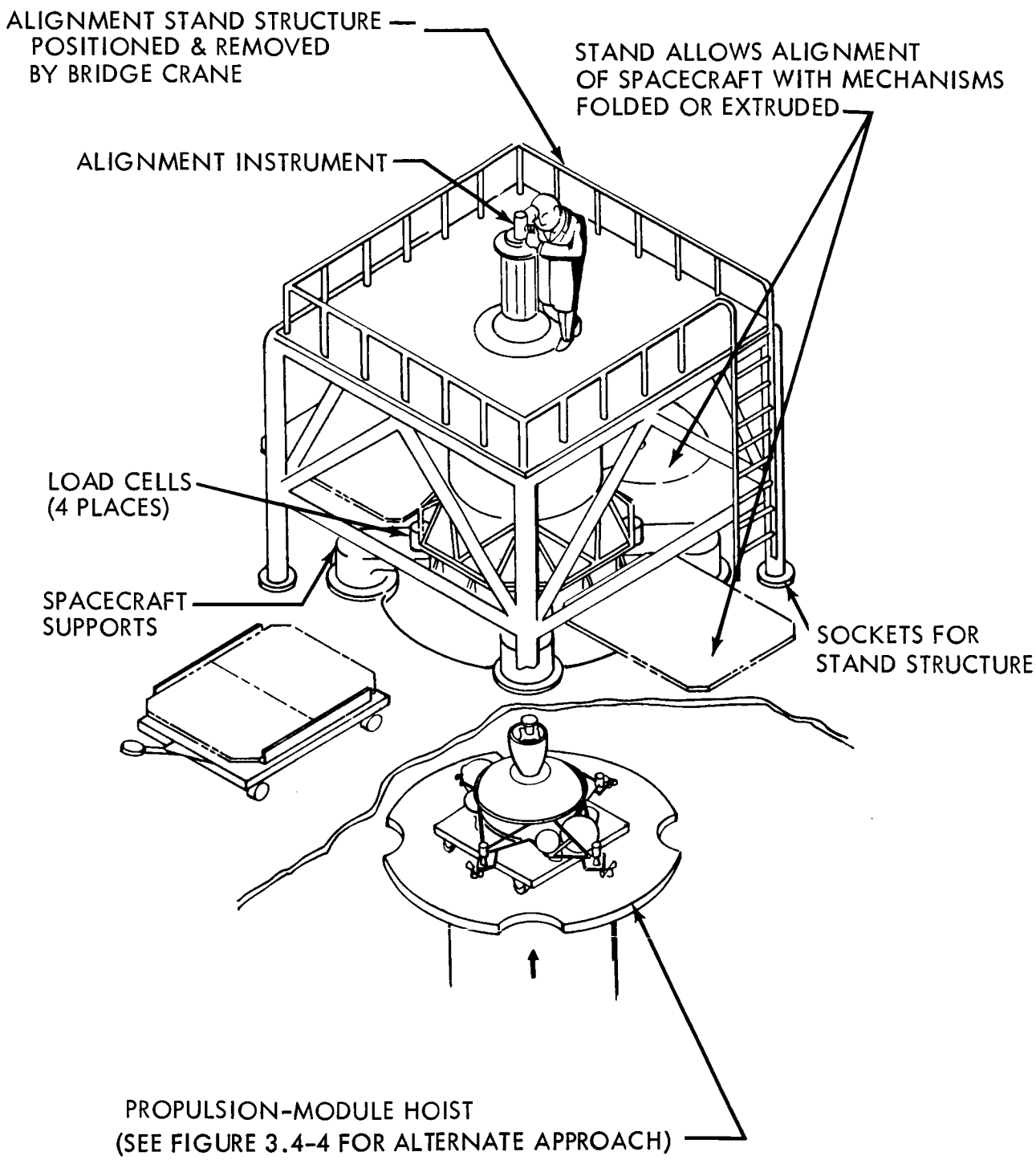

Figure 3.4-3: Weight/Balance of Propulsion Module Alignment Station

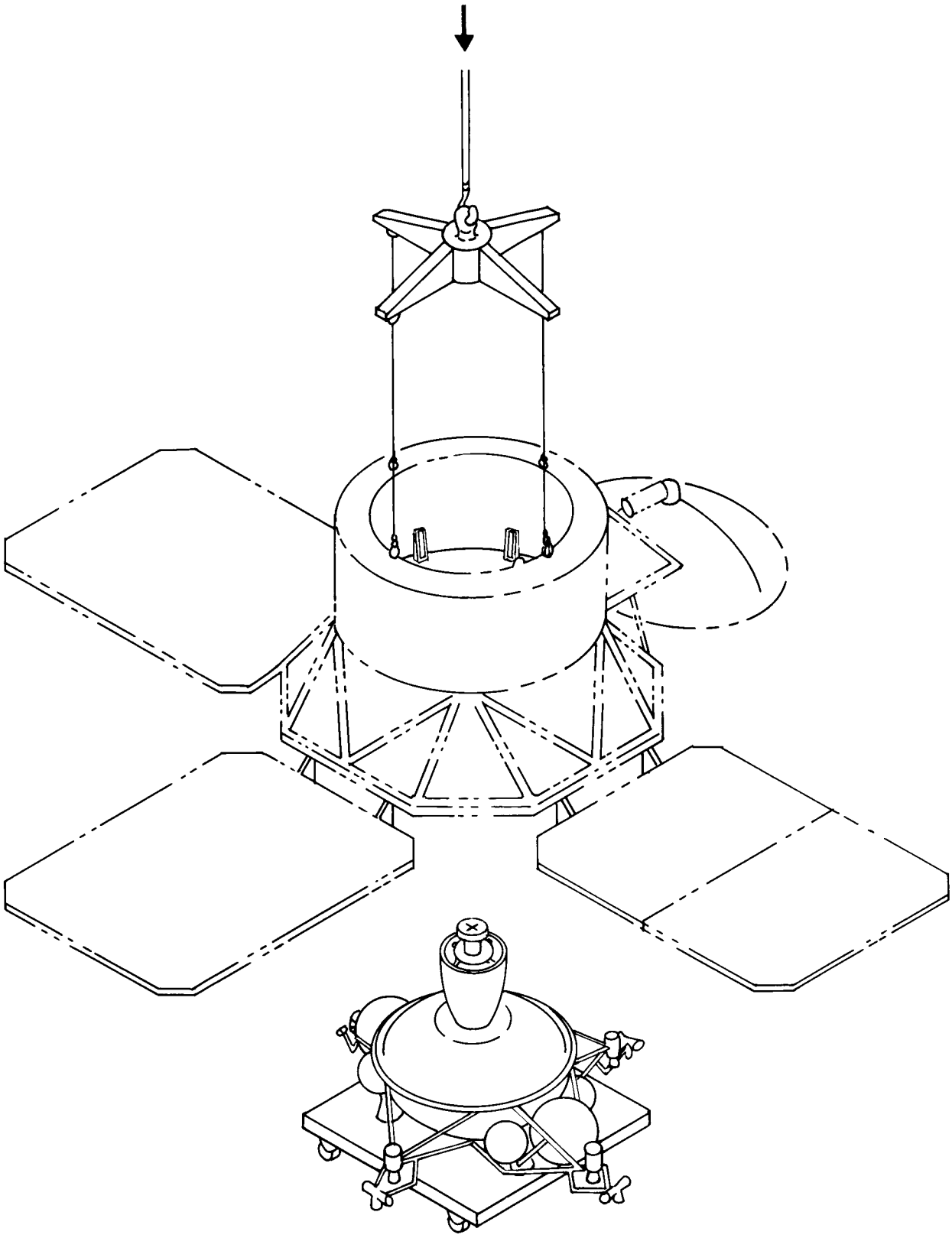

Figure 3.4-4: Propulsion Module Installation (Alternate)

is lowered over the propulsion module and attached. The total unit is then moved to the weight/balance, engine alignment station previously described. Figure 3.4-5 illustrates a measurement approach wherein the large structure above the spacecraft illustrated in Figure 3.4-3 is not required. This approach also solves the mechanism deployment problem.

3.4.5.2 Test Stands and Fixtures

Test Stand--Free Mode--A test stand is needed to support and orient the spacecraft assembly during free-mode tests wherein the vehicle operates with a minimum of OSE test sets or simulation equipment connected. The prime objective of the tests conducted on this stand is that of allowing the spacecraft to operate on internal power with solar panels stimulated by a solar source or the Sun. Spacecraft access for test control and data collection during these tests is by rf telecommunications (open loop) except for the beginning of the test sequence when the umbilical wires and LCE are used.

A specially designed mechanical stand of welded steel construction with electric motor drive capability of table tilt and table rotation in a horizontal plane is proposed. To minimize the physical complexity of this stand, a facility foundation capable of compression and tension loads at four corner points is needed.

Test Stand--STC System Level--A test stand is required for use in both explosive and nonexplosive areas. The test stand has a capability of supporting and positioning the Flight Spacecraft or Planetary Vehicle during certain assembly operations and during system tests. The test

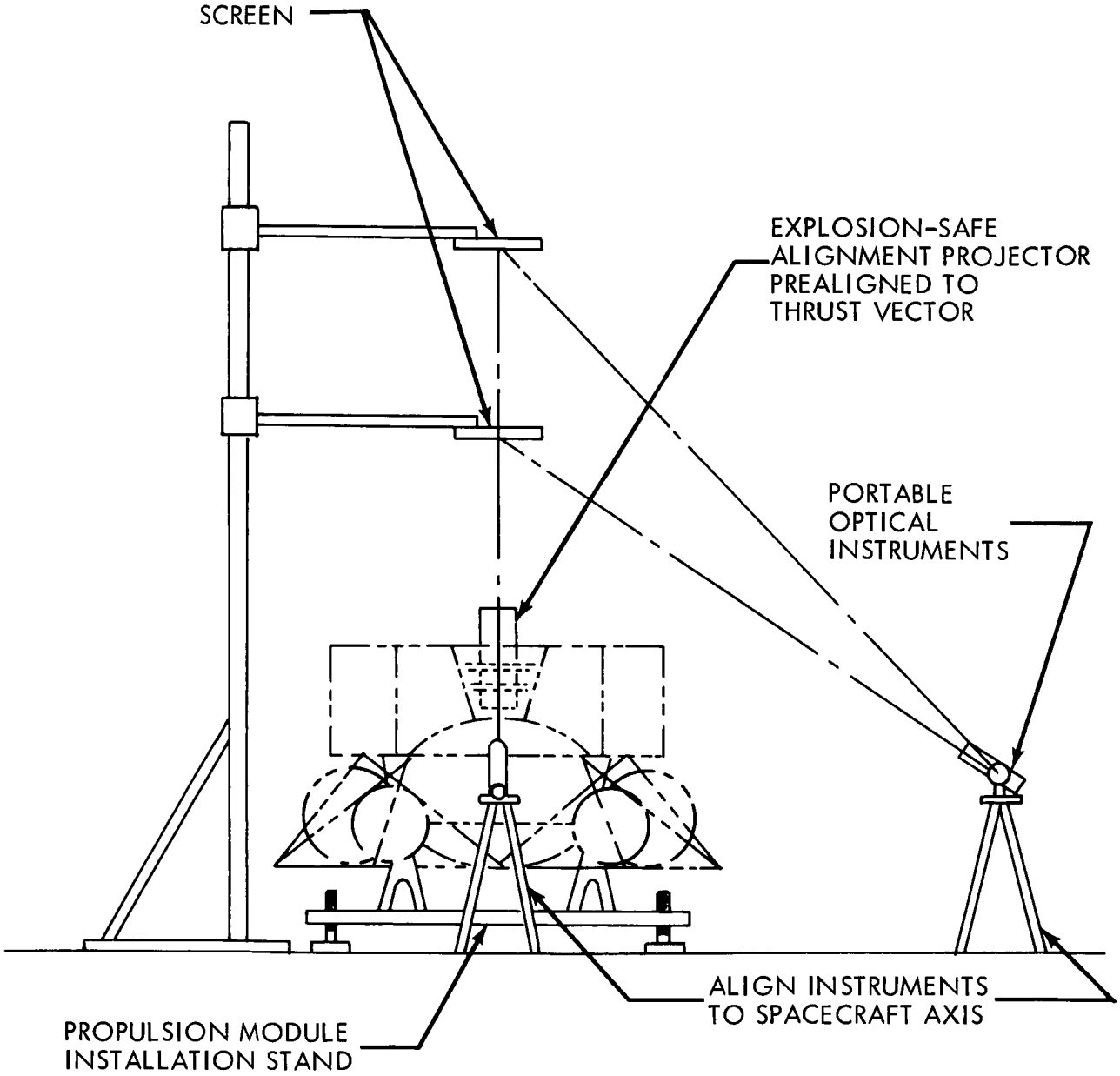

Figure 3.4-5: Thrust Vector Alignment

stand also provides vehicle support and accessibility during fault isolation and maintenance.

This fixture allows positioning of the spacecraft at various attitudes and angles during assembly, maintenance, and system testing. It is assumed that a requirement exists to rotate and also tilt the spacecraft Z-axis to a limited extent when all mechanisms are deployed during system testing. This fixture is also usable to a maximum extent for deployment testing of the spacecraft mechanisms. The rotation and tilt motions required of this device are not coordinated with the spacecraft subsystem by any form of mechanical or electrical coupling. However, a requirement does exist to measure both rates and displacements of the fixture's motions.

A commercially available welding positioner serves as the basic structure and mechanism of this stand. Other special adapters and fittings are required to mate the various spacecraft configurations to the stand. Figure 3.4-6 illustrates this stand in use at the STC.

Test Stand--Mechanism Deployment--A test stand and special installation are required to allow deployment of all spacecraft devices and mechanisms. This stand has the capability to support the spacecraft in the various positions to deploy the mechanisms on the Earth under 1-g conditions. In certain cases such as with the ionization chamber and magnetometer boom assembly, zero-g simulation weight balance or force devices are employed. These devices are subsystem OSE that is integrated into the test station.

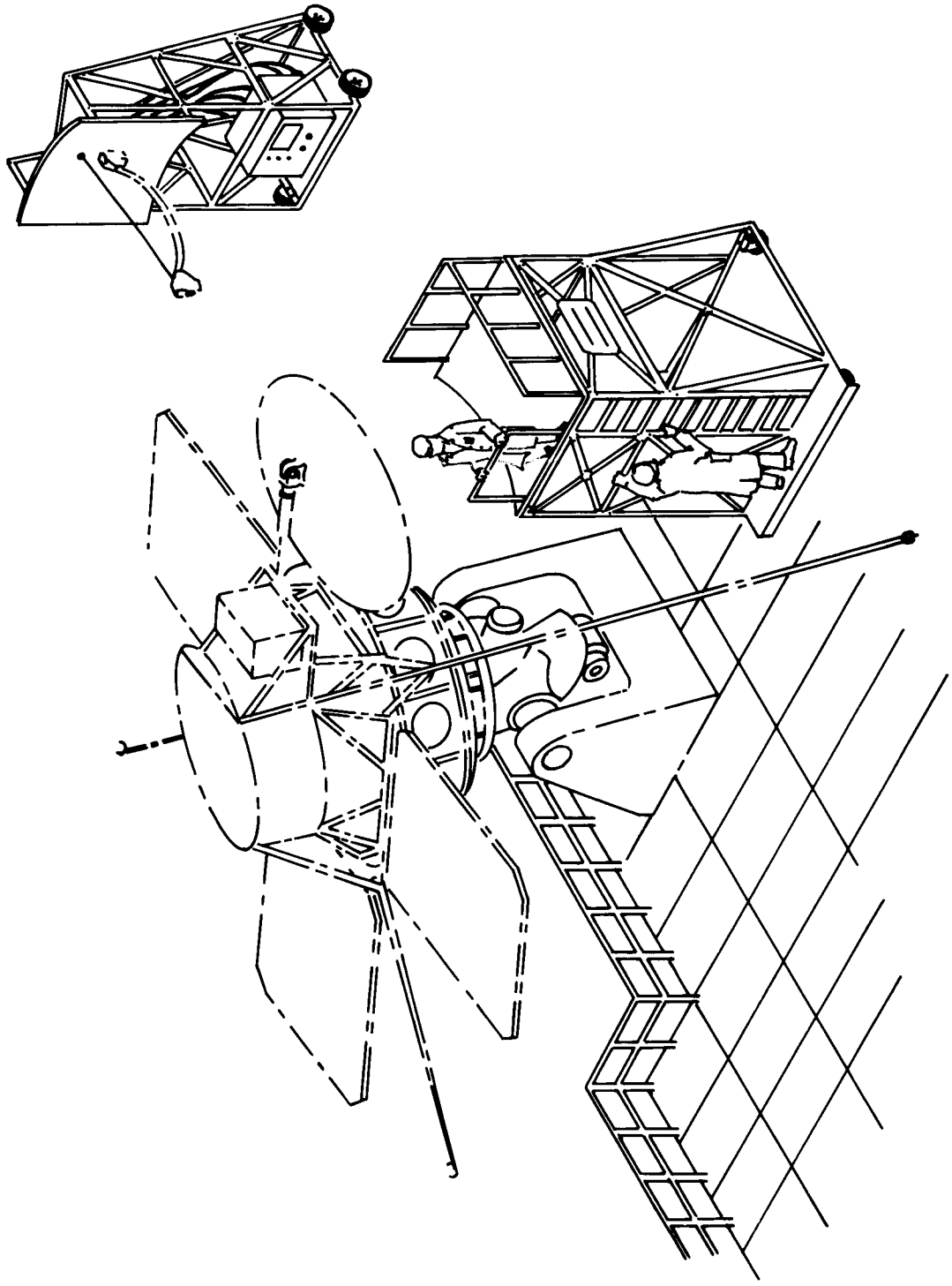

Figure 3.4-6: STC Test Stand

Test Fixture--Planetary Vehicle/Nose Fairing Separation--A test fixture and installation are required to carry out the proof test model sequences to qualify the separation characteristics of the encapsulated Planetary Vehicle. This fixture and associated installations involve a significant number of mechanical devices for both vehicle support and nose fairing segment capture. A major operation interface exists at the test installation regarding capsule, science, and spacecraft OSE because Planetary Vehicle subsystems must operate during these tests.

Test Stand--Goldstone--A test stand is required at Goldstone for use during telecommunications systems tests and Goldstone compatibility tests. This stand must provide a capability for both the Planetary Vehicle and the Flight Spacecraft (Mars orbit) configuration. If practical, this stand will be an STC or ESA device.

Test Fixtures--Antenna Range, EMI, and Acoustic--A number of system-level test fixtures are required for use during proof, reliability, and acceptance testing in Seattle. They are undefined in detail at this point, but concern vibration, acoustics, loads, electrointerference, antenna-range, and other types of tests. These fixtures are listed as OSE by definition.

Test Stand--Magnetic Mapping--A test stand and installation are required to perform the magnetic mapping and magnetic field application functions in the spacecraft processing cycle. This station consists of the system-level AHSE structural stand with adapters to permit mapping of the Planetary Vehicle, Flight Spacecraft, or lower levels of spacecraft

assembly. This station also provides the capability to map spacecraft or perhaps OSE components, if practical.

Test Fixture--Capsule Separation Tests--A test fixture and installation are required in the type-approval program of the overall Planetary Vehicle in Seattle. This test fixture must support the Flight Spacecraft and the capsule in a manner to effect simulated zero-g space separation.

3.4.5.3 Transportation Equipment

Transporter--Encapsulated Planetary Vehicle--A transporter is required to move the Flight Spacecraft, Planetary Vehicle, and the encapsulated Planetary Vehicle from one test location to the next, and to the launch pad. Because the vehicle configurations vary greatly between these usages and moves and shipment to AFETR, a separate transporter is identified for the latter purpose.

This transporter could also act as a buildup or test fixture and propellant loading or rocket motor installation stand. See Figure 3.4-13 for the design approach. This transporter must accommodate the encapsulated Planetary Vehicle possibly containing a capsule RTG. Environmental control equipment and safety monitors are also required on the device as interfacing items.

Transporter--Remote-Site OSE Set--A requirement exists to transport a group of OSE test sets in a configuration that is usable at the ESA, launch pad, Goldstone, free-mode test site, and other system-level tests where test control and data acquisition are conducted primarily by means

of telecommunications. This vehicle transports the simulated DSIF ground station or parts, certain MDE, telemetry equipment, recording equipment, subsystem display and evaluation equipment, and associated power supplies and control consoles that allow the test to take place. This transporter must provide environmental control for both equipment and operators. A general class of over-the-road mobility is provided for this equipment.

A modified commercial highway van with equipment permanently installed is expected to accomplish this transportation function. This van is much like Lunar Orbiter checkout van in principal except that the spacecraft is not transported as part of the van equipment set.

Transporter--OSE--This category is reserved to include any special trailers, vans, or mobile devices to contain the OSE during transportation where these devices are not classed as shipping containers.

3.4.5.4 Safety Devices

A category is reserved in system-level AHSE to include mechanical safety devices such as escape catenaries, blast barriers, radiation barrier (shielding), special force- or load-restraining systems, nets, and propellant shields.

3.4.5.5 Work Platforms and Access Equipment

The size and configuration of the Voyager spacecraft and the arrangement of the Saturn/Centaur on its launch pads present a number of major physical access and personnel operational support problems that are solved by provisioning adequate work platforms and access devices.

3.4.5.6 Dollies, Trucks, and Installation Devices

Dolly--General Purpose--A general-purpose dolly is required to handle the various spacecraft field-spare components in the spacecraft assembly and maintenance area. This dolly can also be used to handle certain OSE items (e.g., simulators). This device interfaces with subsystem-OSE adapters that are furnished for each subsystem field-spare item requiring mechanical handling.

Installation Device--Spacecraft Components--Certain spacecraft components are located in the structure so that conventional installation devices such as cranes, hoists, slings, hands, and shop lifts are inadequate to allow safe, easy assembly or maintenance. A special installation device is provided to interface with subsystem-OSE adapters that support the subsystem components at appropriate points for handling, positioning, adjustment, and installation.

3.4.5.7 Protective Covers

Protective covers at the systems level are listed for both OSE and the spacecraft. Detailed requirements for such covers are undefined at this point, but generally include such items as:

1) Portable clean rooms;
2) Fueling protective devices (splash aprons);
3) Covers used during transport or storage on transporters where these covers are not part of the transporter;
4) A simulated shroud for use during system-level tests where the air
5) conditioning (if any) with the nose fairing must be duplicated; Test area covers (e.g., Goldstone);

6) Sterilization enclosures;

7) Other.

3.4.5.8 Shipping Containers

This category is reserved for both OSE (system-level) and spacecraft (system-level) shipping containers. Shipping containers are transportable but not inherently mobile.

Spacecraft Container--A transporter is required to receive the Spacecraft Bus at the end of Seattle manufacturing and test, then provide for safe transportation by air or road to AFETR or other points within the Continental U.S. (excluding Alaska). The transporter may be used as a reasonably long-term storage unit for completed spacecraft assemblies, and thus provide for unattended usage in a variety of physical areas. The transporter must be able to protect the spacecraft in the event of unscheduled landings, stopovers, equipment changes, and prime mover failures during winter, storm conditions, or summer heat. If air transportable, the device must be able to comply with the most severe emergency condition criteria associated with the various aircraft and carriers planned. The transporter must not present a safety hazard to the transportation crews in event of emergency descent or depressurization or container rupture.

A reusable container is selected to ship the partially disassembled spacecraft by C-124 or larger aircraft. To meet the envelope requirements, the solar panels, booms, capsule, high-gain antenna, and certain boom and solar panel hing support structure must be removed. The

propulsion module may be shipped with the spacecraft or may be shipped separately. Figure 3.4-7 illustrates two types of containers ranging from a sealed hard unit to a soft-cover, unsealed unit. It is proposed that a sealed, hard unit be used for the Voyager program. An environmental control system is part of this device and considers all usages, spacecraft requirements, emergencies, storage time and other demands. This system, while illustrated as a passive system, may be an active air conditioning set supplied and mounted with the container.

Figure 3.4-8 illustrates this container in the transportation configuration for highway movement wherein special permits and convoys are required because of over legal widths (about 11 feet). Air transportation is planned by C-124 or equivalent. Close loading fits are evident between the packaged spacecraft and the aircraft structure. The closeness of fit influences the shipping container form and size.

The magnetic and cleanliness requirements set by the spacecraft are emphasized in this design. Also specified are a spacecraft suspension system and shipping orientation which most closely follows the load carrying capabilities provided in the spacecraft structure for the boost conditions.

3.4.5.9 Lifting Slings and Fixtures

Encapsulated in Nose Fairing Planetary Vehicle Lifting Fixture--A lifting fixture is required to install the encapsulated Planetary Vehicle (PV) onto the Saturn/Centaur launch vehicle. This lifting fixture must remove the encapsulated PV from its transporter and, by interfacing with the

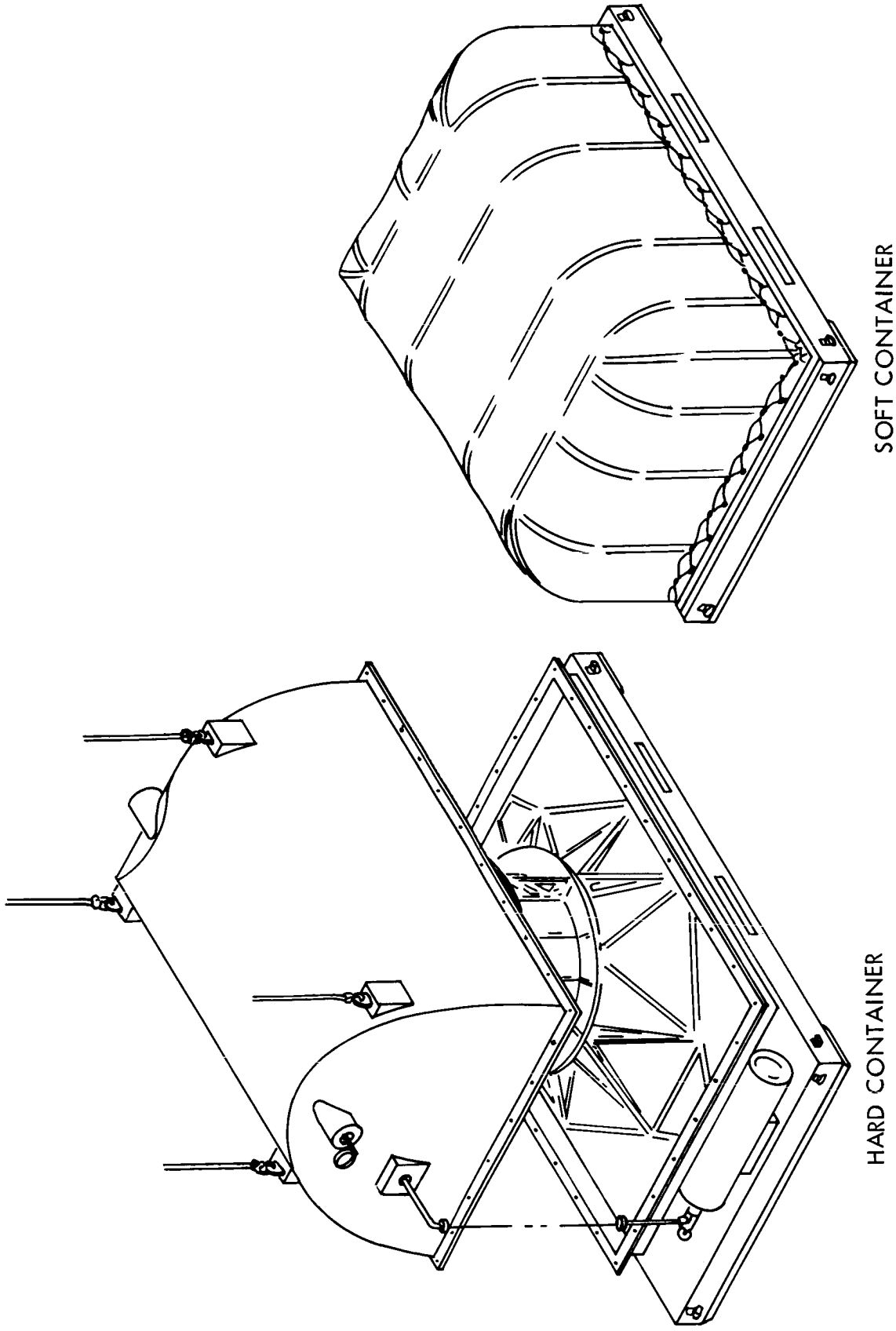

Figure 3.4-7: Spacecraft Container

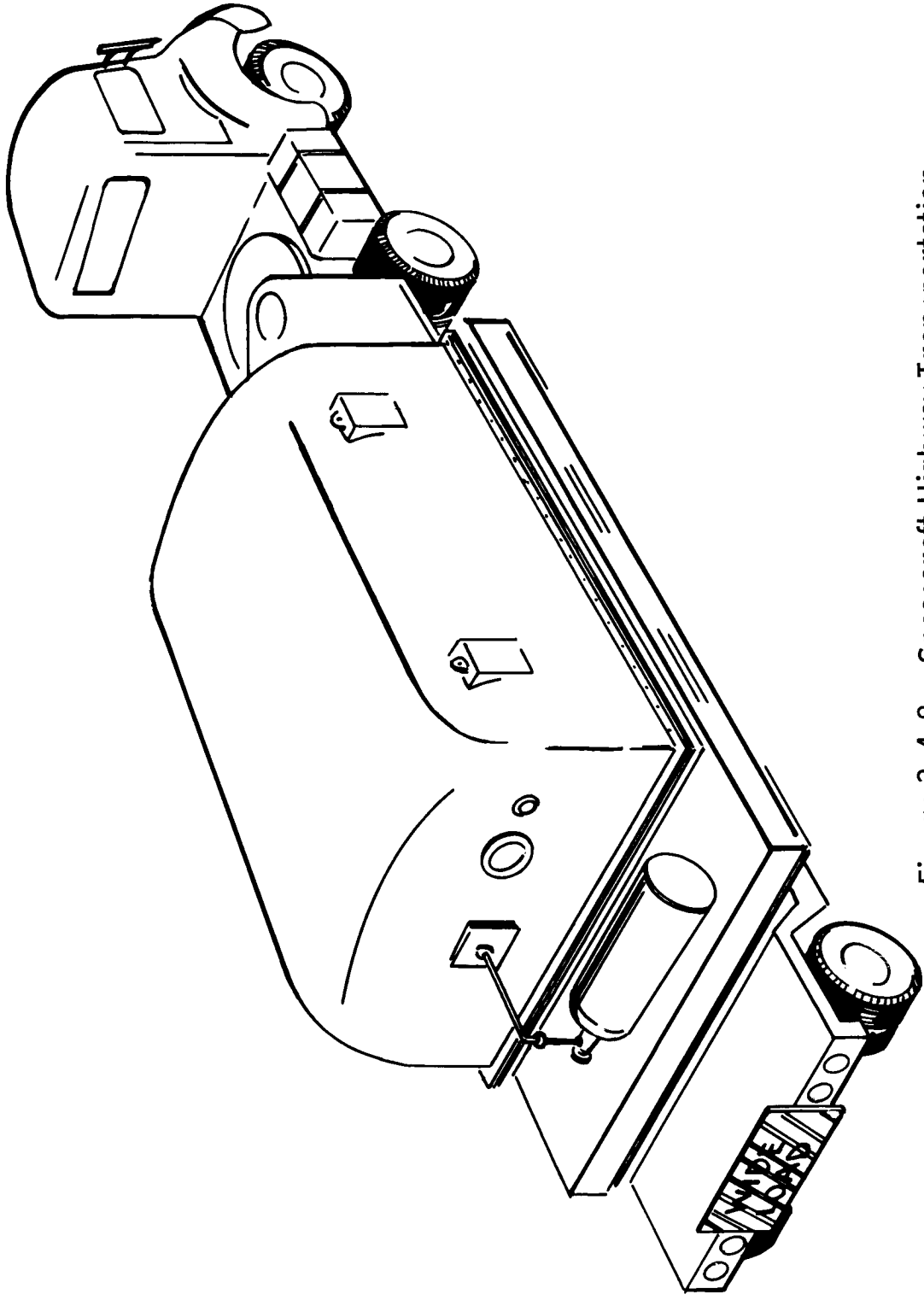

Figure 3.4-8: Spacecraft Highway Transportation

launch Pad 34 or 37 handling equipment, must provide for safe entry through the service tower structure onto the launch vehicle. As presently envisioned this lifting fixture need not provide roll-over capability. It is proposed that the encapsulated PV be handled upright on its transporter. Cooling may be required to the PV during handling because of the heat rejection requirements of the RTG in the capsule; if so, a major design and interface problem will exist. This fixture is usable for installation of the encapsulated PV to its transporter at the ESA. Also, this fixture is usable for nose fairing separation tests during proof model testing in Seattle.

The design approach to this fixture may range from a single, one cable hoist as shown by Figure 3.4-9 to an extremely complex lifting assembly as shown in Figure 3.4-10. Two other possible approaches are shown by Figures 3.4-11 and -12, these being adaptions of the first two schemes. The most significant point in this design area is that a major interface problem exists between the ground equipment and the launch vehicle and perhaps the capsule. This interface problem area is illustrated by Figure 3.4-11.

A concept of handling and fixture design is shown by Figure 3.4-13. This figure also points out other ground system interface requirements.

Planetary Vehicle Lifting Fixture--A lifting fixture is required to handle and move the Spacecraft Bus (fully assembled with propulsion or dry), the capsule and science payload during various operations of assembly, test and service. The spacecraft adapter may be on or off.

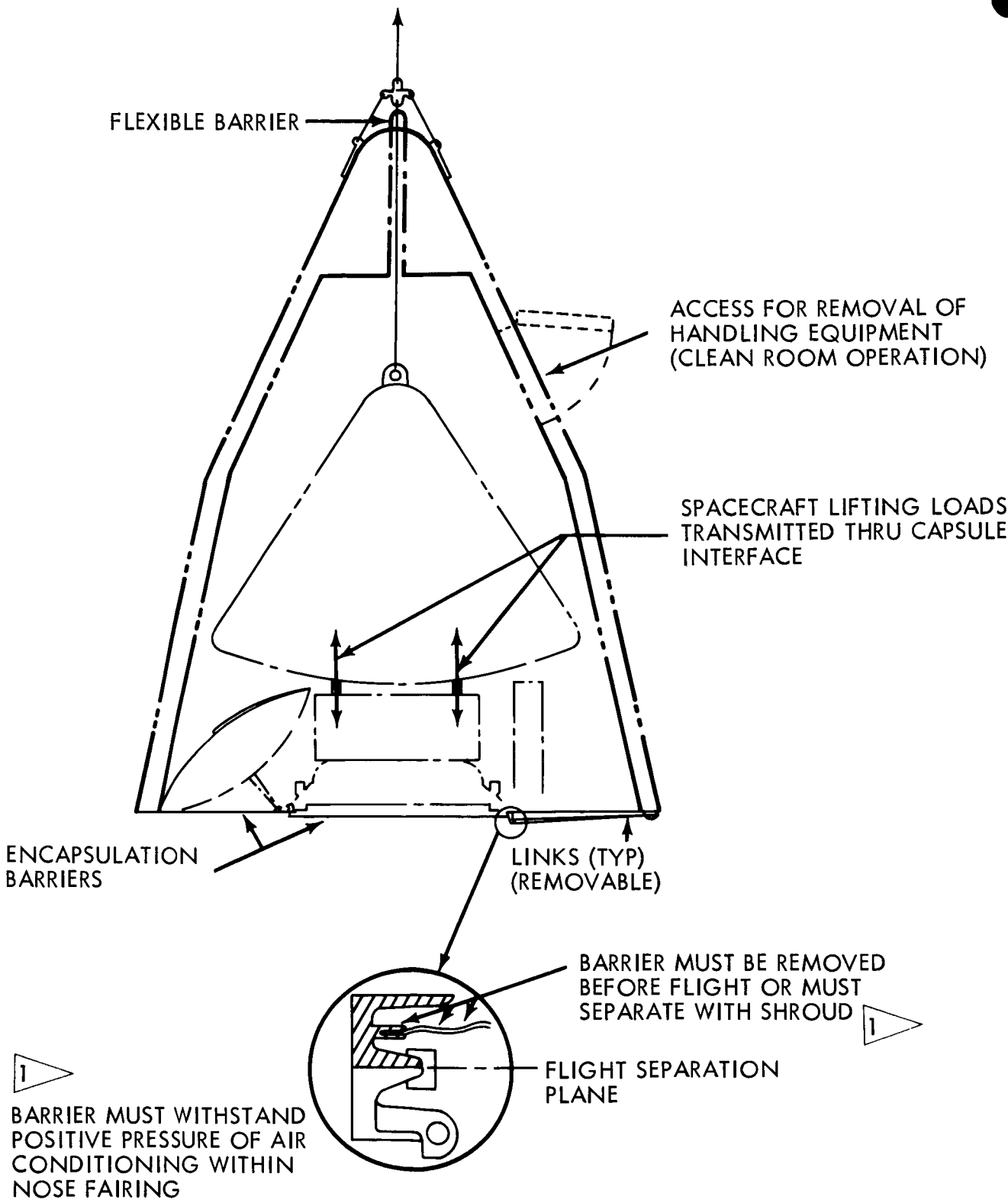

Figure 3.4-9: Encapsulated PV Lifting — Single Point Approach

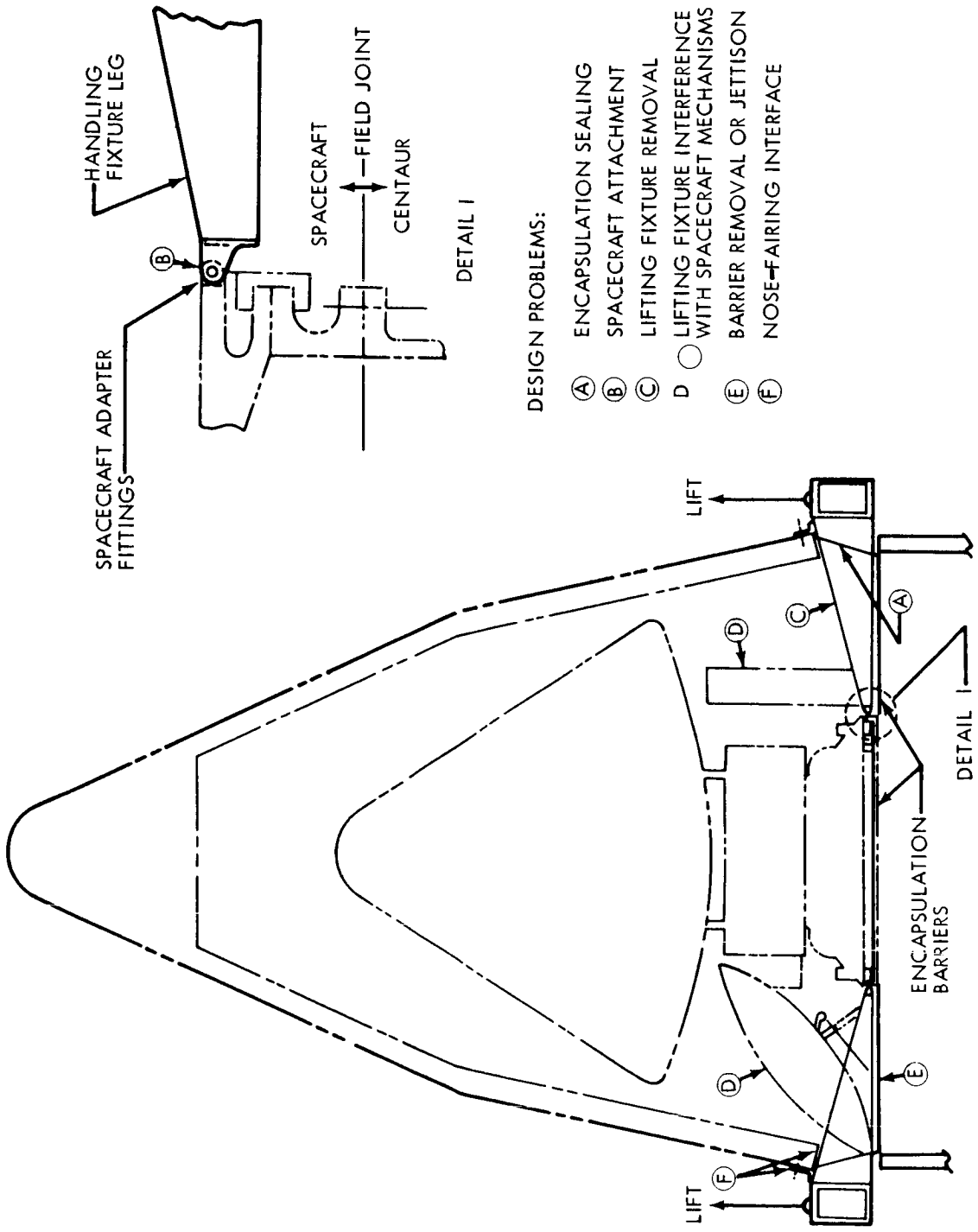

Figure 3.4-10: Encapsulated Spacecraft Lifting Fixture

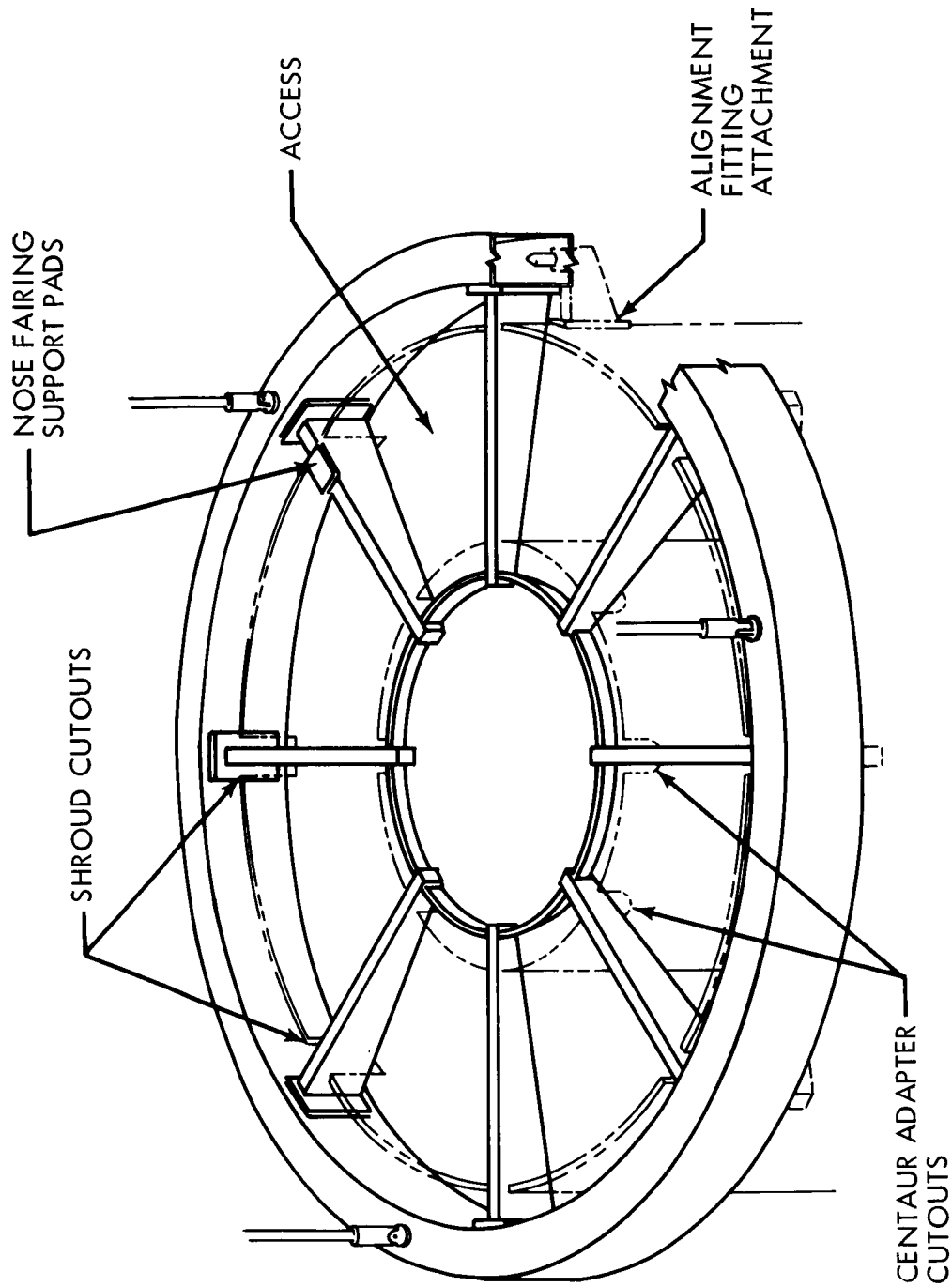

Figure 3.4-11: Possible Launch Vehicle Interfaces with Handling Fixture

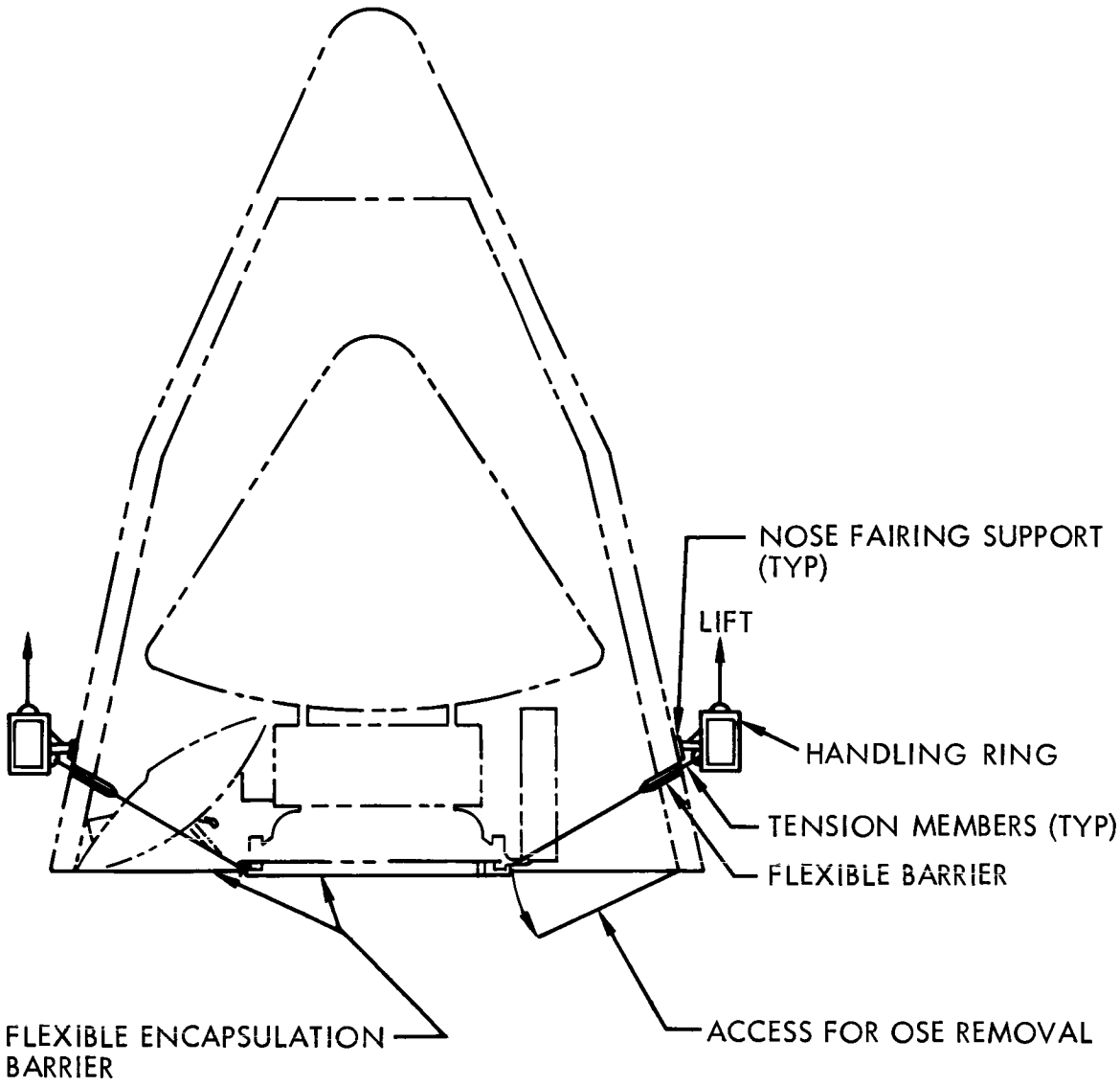

Figure 3.4-12: Encapsulated PV Lifting Fixture — Alternate

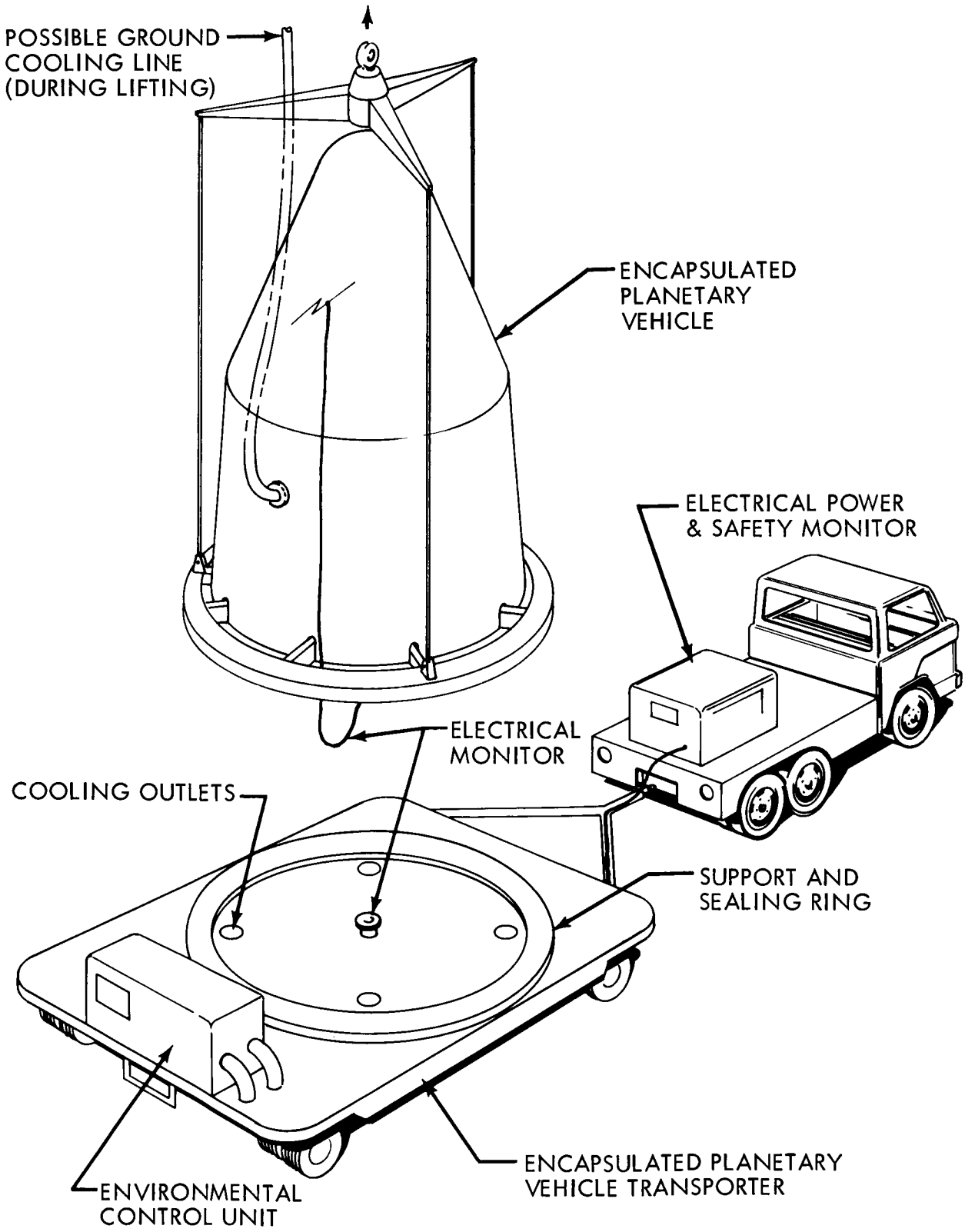

Figure 3.4-13: Encapsulated Planetary Vehicle Transport and Handling

This fixture must handle the Planetary Vehicle with all mechanisms folded in the boost configuration. The device must also allow visual and physical access to all required components to allow test, alignment, service, assembly and other operations planned. Vertical orientation only of the Planetary Vehicle is provided.

Spacecraft Lifting Fixtures--A lifting fixture is required to handle and move the Spacecraft Bus at various levels of assembly up to and including the Flight Spacecraft with adapter configuration. These configurations may be both wet (with solid engines) or dry. Many OSE and physical interfaces must be accommodated in this design as well as providing for the many operations of assembly, installation, alignment, inspection, maintenance, service and test while the vehicle is in this unit. This unit may require a roll-over capability, but only at a point when the major mechanisms are removed from the Spacecraft Bus.

3.4.5.10 Assembly Jigs, Fixtures, and Special Tools

Installation Kits--A number of installation kits are identified at the systems level for use during assembly, build-up, and maintenance both at AFETR and Seattle. These kits may be used at other test locations. The kits consist of the special tools and devices required to effect major assembly uniting operations.

Assembly Jigs--Spacecraft Bus--A special jig, fixture or stand is required to allow all system level assembly operations to take place in an efficient, safe, orderly, coordinated and accurate manner. This jig (or fixture)

must allow positioning of the spacecraft in all required attitudes and orientations projected for Seattle final assembly, Goldstone assembly and AFETR assembly and maintenance to the replaceable field spare. Alignment, holding, clamping and positioning will be provided to the extent required.

The reduction and control of the bacterial load of the spacecraft through assembly, test and launch will require continuing study. Definition and delineation of operational techniques and required equipment must include consideration of all possible sources of contamination. Throughout fabrication, storage, handling and transportation a level of cleanliness consistent with the decontamination requirements selected will be necessary to keep the decontamination potential to a minimum. The selected parts sterilization approach will require development of special handling and assembly techniques to retain parts sterility.

3.5 SPACECRAFT SIMULATOR

3.5.1 Equipment Identification and Usage

The spacecraft simulator is an electrical-electronic simulator of the Flight Spacecraft. Its purpose is to permit final checkout of the LCE and MCE at the earliest point in time. Functions to be simulated are the umbilical and rf link functions of the spacecraft as they affect the LCE and MDE. The spacecraft simulator will have the capability to simulate spacecraft conditions requiring command from the LCE.

The spacecraft simulator is planned for use in performing system-level compatability checks of spacecraft with the STC; however, no subsystem interface simulation or subsystem fault-isolation simulation will be incorporated.

Subsystem--The spacecraft simulator will incorporate electrical-electronic simulation of the following subsystems:

1) Telecommunications;
2) Attitude reference and autopilot;
3) Central computer and sequencer;
4) Electrical power;
5) Temperature control;
6) Pyrotechnic.

Of these, the telecommunications subsystem simulation will consists of a separate simulator (telecommunications simulator) that can be removed as a unit and used in MDE and DSIF checkout.

Planetary Vehicle--The spacecraft simulator will include umbilical leads and interfacing circuitry to provide for attachment of the flight capsule simulator and Science Payload simulator. It is anticipated that these simulators will be government-furnished equipment (GFE); when all of these simulators are used together they will constitute a Planetary Vehicle simulator.

3.5.2 Functional Description

The functions represented consist of all functions occurring at the umbilical (spacecraft - Launch Vehicle interface at the spacecraft-Centaur joint, Saturn Station 2048) and all of the radio-link functions.

3.5.2.1 Spacecraft Telecommunications Subsystem

The spacecraft telecommunications simulator will be used in checking out and establishing the operational readiness of the mission-dependent equipment at the launch site and the DSIF stations. The telecommunications simulation will be used to check out and establish the operational readiness of the LCE via radio link monitoring of flight data.

Required Functions--The required functions of the spacecraft telecommunications simulator are:

1) Receive, phase lock and track the DSN command frequency carrier;
2) Detect, decode and visually display command signals from the DSN;
3) Coherently convert the received carrier frequency by a 240/221 ratio and retransmit this frequency as the telemetry carrier;
4) Generate simulated analog, digital, and pulse-code-modulated data of the various mission modes; multiplex these signals and

phase-shift-key modulate telemetry subcarriers; and apply this to the telemetry carrier.

5) Generate a pseudo-noise code for application to the telemetry carrier.

6) Demodulate the range-code video information transmitted by the DSN on the command-frequency carrier and modulate the telemetry carrier with this information for retransmission to the DSN.

7) Provide a radiated telemetry carrier to permit checkout of the DSN antennas and receivers.

8) Provide a simulated DSN receiver output telemetry data signal to permit checkout of the telemetry ground station. The capability to inject a known amount of noise on the data will be provided.

9) Provide a bit-error detector to compare transmitted simulated PCM signals with that received by the telemetry ground station S-band receiver and detected by the subcarrier demodulator, bit synchronizer, and data reconstructor.

3.5.2.2 Attitude Reference and Autopilot Subsystem

The following umbilical functions must be simulated for LCE checkout:

1) Power to attitude reference and autopilot subsystem;

2) Autopilot temperature;

3) Attitude reference module temperatures (two temperatures).

3.5.2.3 Central Computer and Sequencer Subsystem (CC&S)

The central computer and sequencer (CC&S) simulator will check out and verify the operational support equipment (OSE) prior to the test of the

Flight Spacecraft. The simulator will supply the equivalent load or voltage/impedance that is required by the CC&S via the Centaur umbilical with the OSE.

3.5.2.4 Electrical Power Subsystem

The electrical power subsystem simulator serves two principal functions:

1) To checkout wiring, controls, and test circuitry located at STC and LCE that have been provided for the checkout of the spacecraft electrical power system.
2) To provide power with spacecraft characteristics for the operation of other subsystem simulators.

The simulator will supply the equivalent of each type of power and voltage generated in the spacecraft. Controls will be provided to vary power source characteristics within the limits specified for the mission.

3.5.2.5 Temperature-Control Subsystem

All electrical heaters and thermostatic switches will be simulated. Heater and switch simulators will be of the same electrical characteristics as those used in the Flight Spacecraft.

3.5.2.6 Pyrotechnic Subsystem

The following functions will be performed:

1) Receive and acknowledge pyrotechnic arm signal;
2) Receive and acknowledge pin-puller safe signal;
3) Provide common return.

3.5.3 Interface Definition

The primary purpose of the spacecraft simulator is to check out the interfaces between the Planetary Vehicle and the OSE, as discussed in Section 3.5.3. In addition to these, the spacecraft simulator will be designed for use in the service towers at Launch Complex 34 and 37, AFETR at the location of the Centaur/Spacecraft interface. The following requirements will be met:

1) Electrical power--as supplied in the service tower.
2) RFI--the spacecraft simulator and the RF link will be shielded to obviate any possibility of radio-frequency interference.
3) Work space--the spacecraft simulator will be capable of being elevated to the work platform and installed and used in the service tower clean room.

3.5.4 Performance Parameters

The performance parameters of the spacecraft simulator will be identical to spacecraft parameters peculiar to the umbilical cable and the telecommunications flight-status-monitoring radio link. Values will embrace a wider range than design spacecraft values to permit demonstration of OSE design margins.

3.5.5 Physical Characteristics

The spacecraft simulator will be packaged in standard racks and drawers insofar as possible. It will be suitable for use in a conditioned environment (shop or laboratory). Details of design to implement good reliability, maintainability, and safety are as documented in Section 2.4.6 of this document.

3.5.6 Safety Considerations

Design and use of the spacecraft simulator will be as defined in Section 2.4.6 of this documnet and in accordance with the stipulations of AFMTCP 80-2, "General Range Safety," Volumes 1 and 2, dated 1 October 1963.

3.6 SPECIAL SYSTEM-LEVEL OSE--FUNCTIONAL DESCRIPTIONS

The special system-level category of OSE includes:

1) Procedures and software for collecting and processing significant trend data acquired during test operations with flight hardware;
2) Equipment used at Seattle facilities for magnetic mapping of the proof test model and Flight Spacecraft and at ETR for magnetic mapping of the completely assembled and serviced Planetary Vehicle.

Functional descriptions of this special system-level OSE are included in the following subsections.

3.6.1 Trend-Data Equipment

3.6.1.1 Equipment Identification and Usage

Trend-data equipment (software) consists of the procedures for collecting and editing trend data from part, component, subsystem, and system testing and mission flight of the spacecraft systems. Trend-data equipment also includes computer programs used to accumulate, identify, store, retrieve, analyze, and present trend data. This section describes the elements of the trend-data program in four major subcategories: data collection, data accumulation and storage, data analysis, and data presentation.

3.6.1.2 Critical Parameters

Parameters critical in trend-data equipment are, in order of importance, as follows:

1) Providing high confidence in accurate prediction of trends;

2) Determining and verifying the perturbing forces acting on the spacecraft that can cause performance degradation;

3) Providing adequate measurements and data for trend prediction in all degradation modes;

4) Combining the specific capabilities of the trend-data equipment and the analyst and engineer to provide an effective man-machine system for improved decision-making capabilities.

3.6.1.3 Data Collection, Accumulation, and Storage

Preliminary analysis has identified a number of significant trend parameters. They are the functional and status measurements of power systems such as solar panel currents and voltages and battery voltage-to-current ratios, telecommunication measurements such as bit error rates and received-signal strength, susceptibility of electronics and pyrotechnics to radiation dosage and temperature, and attitude reference and attitude control performance measurements. Further analysis will define the specific measurements to be taken during all levels of test in terms of the flight measurement list.

The OSE test equipment designs include a capability to record, identify, and preserve the technical measurements taken during ground tests. These data from ground tests will be subjected to a computer editing process in which significant trend data will be selected from the total data record and converted into useful engineering units before it is stored in the trend-data accumulation and storage elements of the trend-data program.

The collected data will be tagged with the appropriate identifiers and stored in bulk computer storage.

Computer data processing generates trend data for engineering evaluation. The resulting tabular listings and time-history plots will then be used by the subsystem designers and specialists to determine what subsystem improvement action should be taken.

Presentation of trend data will continue throughout the Voyager program. As data are accumulated, the measured performance of the trend parameters will be compared with previous predictions. The results of the comparisons are used to correct and improve the trend analysis processes.

During countdown, launch, Earth orbit, transmartian flight, Mars encounter, and postencounter phases of the mission, trend data will be presented at SFOF for evaluation during the flight mission. Specific emphasis will be given to displaying parameters having operational impact on the mission. In particular, current plans include display of radiation and temperature susceptibility of the electronics versus measured accumulated dosage and predicted status of each subsystem of the Planetary Vehicle, capsule, and science payload as a function of imposed environments, time, and operational cycles.

3.6.1.4 Interface Definition

The trend-data system interfaces functionally with all Voyager data acquisition systems and with engineering analysis activities.

3.6.1.5 Overall Performance Parameters

Performance parameters are identified by their relative influence on the design of the trend-data equipment.

The design provides capabilities to perform assigned trend-data tasks in a timely and complete manner for decision-making and reaction to ensure mission success.

All significant trend data will have been processed and placed in data storage, and data required for analysis will have been presented to the cognizant engineer.

3.6.2 Magnetic Mapping of OSE

Equipment Identification and Usage--This description concerns items used for the magnetic mapping of the Planetary Vehicle and its associated subsystems.

Critical Parameters--The foremost consideration in the mapping process is accuracy of the magnetic-field determination. This applies to the Planetary Vehicle and its subsystems. A secondary consideration for the Planetary Vehicle is the capability to accomplish the process in a predictably short time because of window limitations.

Functional Description--Magnetic mapping of subsystems and the Planetary Vehicle takes place both at the contractor's facility in Seattle and in the AFETR GFP facility.

At the contractor's facility (to be constructed) in Seattle, magnetic mapping will be performed for subsystems and for the Planetary Vehicle less the solar arrays. Mapping and perming will be performed on subsystems before they are incorporated in the Planetary Vehicle. Before installation of the solar panel assemblies, the Planetary Vehicle will be mapped and the fields of the vehicle and solar array combination determined analytically.

The subsystem mapping process is straightforward for most subsystems; nonmagnetic jigs will be used for positioning. The solar panels, however, will require current simulation because solar radiation cannot readily be provided in the neutralized field facility. Current simulation will be accomplished by running current to the panel in question through coaxial lines and coupling devices.

The Planetary Vehicle with the solar arrays removed will be mounted on a special nonmagnetic test fixture for mapping. No electrical cables will be run to the Planetary Vehicle; instead, the power source will be a set of flight approved test batteries and the Planetary Vehicle to LCE communication line will be the flight data RF system operated open-loop.

Cooling must be provided to the Planetary Vehicle during the mapping process. This will be done by supplying the vehicle through a long nonmagnetic hose fed by the portable air conditioning unit.

At AFETR, the Planetary Vehicle will be mapped after shipment and after capsule installation. This mapping takes place in a government-furnished neutralized field facility at the ESA. Requirements for magnetic mapping OSE are the same as for Planetary Vehicle mapping at the contractor's facility.

Equipment required at both the contractor's facility and AFETR/ESA includes the following.

1) Gimballed nonmagnetic fixture capable of securing the Planetary Vehicle and rotating it around three orthogonal axes. Nonmagnetic drive to rotate the vehicle will be provided for. Position pickoffs (angle indicators) will be installed and wired to provide inputs to X-Y plotters.
2) X-Y plotters will be provided for each axis of rotation in which the Planetary Vehicle is mapped. These will plot field strength versus position angle.
3) Portable air conditioning unit (Item C-29)
4) An air conditioning hose to provide physical separation between the Planetary Vehicle and the air conditioning unit to minimize field perturbation.
5) Two fluxgate magnetometers.

Performance Parameters--The mapping equipment will be capable of resolution greater than 10^{-5} gauss depending on the characteristics of the neutralized field facility.

3.7 EQUIPMENT LIST

The system level OSE equipment required for the 1971 Voyager mission is listed in Table 3.7-1. The listing is tabulated by category, and an identification number is assigned to each item. This identification number also relates the item to the subsection of Section 3 which describes the equipment category. Use assignments for each item are indicated by an "X" in the appropriate column at the current level of equipment identification.

Table 3.7-1: SYSTEM LEVEL OSE CATEGORY: MISSION DEPENDENT EQUIPMENT (MDE)

ITEM NO.		USE ASSIGNMENTS: KENT FACILITY, SEATTLE	SCF (AFETR)	ESA (AFETR)	AFETR MAGNETIC MAPPING	LAUNCH PAD 34	LAUNCH PAD 37	DSIF STATION	SFOF
3.1									
3.1.1	High Bit Rate Subcarrier Demodulator, Bit Synchronizer and Data Reconstructor	X	X	X	X	X	X	X	
3.1.2	Low Bit Rate Subcarrier Demodulator, Bit Synchronizer and Data Reconstructor	X	X	X	X	X	X	X	
3.1.3	Master Decommutator and Frame Synchronizer	X	X	X	X	X	X	X	
3.1.4	Engineering Data Decommutator	X			X	X	X	X	
3.1.5	Engineering Data Frame Sync Recognizer	X			X	X	X	X	
3.1.6	Engineering Data Subframe Sync Recognizer	X			X	X	X	X	
3.1.7	Command Processor	X	X	X		X	X	X	
3.1.8	Frequency Down Converter	X						X	
3.1.9	Computor Interface Equipment	X	X	X	X	X	X	X	
3.1.10	Command Verification Processor (SDS 920 Software)	X	X	X	X	X	X	X	
3.1.11	Command Transmission Processor (SDS 920 Software)	X	X	X	X	X	X	X	
3.1.12	Input Trap Processor (SDS 920 Software)	X	X	X	X	X	X	X	
3.1.13	Telemetry Processor (SDS 920 Software)	X	X	X	X	X	X	X	
3.1.14	Output Processor (SDS 92 Software)	X	X	X	X	X	X	X	

Table 3.7-1: SYSTEM LEVEL OSE CATEGORY: MISSION DEPENDENT EQUIPMENT (MDE)

ITEM NO.		USE ASSIGNMENTS	KENT FACILITY, SEATTLE	SCF (AFETR)	ESA (AFETR)	LAUNCH PAD 34	LAUNCH PAD 37	DSIF STATION	SFOF
3.1									
3.1.15	Subcarrier Demodulator & Bi-Orthogonal Block Decoder		X	X					X
3.1.16	Predetected Tape Demodulator		X	X					X
3.1.17	Input Processor (7040/7044 Software)		X						X
3.1.18	Output Processor (7040/7044 Software)		X						X
3.1.19	Telemetry Processor (7040/7044 Software)		X						X
3.1.20	Input Processor (IBM 7094 Software)		X						X
3.1.21	Telemetry Processor (IBM 7094 Software)		X						X
3.1.22	Output Processor (IBM 7094 Software)		X						X
3.1.23	IBM 7040 Command Processor		X						X
3.1.24	Flight Path Analysis Program (IBM 7094 Software)		X						X
									X
3.1.25	Spacecraft Performance Analysis Program (IBM 7094 Software)		X						X
									X
3.1.26	Space Science Analysis Program (IBM 7094 Software)		X						X
3.1.27	Manual Analysis Aids (Software)		X						
3.1.28	Mission Integration and Control (Software)		X						

Table 3.7-1: SYSTEM LEVEL OSE CATEGORY: LAUNCH COMPLEX EQUIPMENT (LCE)

ITEM NO.		USE ASSIGNMENTS: KENT FACILITY, SEATTLE	SCF (AFETR)	ESA (AFETR)	AFETR MAGNETIC MAPPING	LAUNCH PAD 34	LAUNCH PAD 37	DSIF STATION	SFOF
3.2									
3.2.1	Ground Power Switching Unit		X		X	X			
3.2.2	Umbilical Function Unit		X		X	X			
3.2.3	S-Band Two-Way Repeater				X	X			
3.2.4	Umbilical Set				X	X			
3.2.5	Repeater Cabling Set				X	X			
3.2.6	S-Band Transmitter		X	X	X	X			
3.2.7	S-Band Receiver		X	X	X	X			
3.2.8	Centaur VHF Landing Receiver				X	X			
3.2.9	Centaur VHF Data Buffer				X	X			
3.2.10	Data Processor and Formating Unit		X	X	X	X			
3.2.11	Recorder Complex		X	X	X	X			
3.2.12	Data Process and Record Mode Control Console		X	X	X	X			
3.2.13	Planetary Vehicle Monitor Console		X	X	X	X			
3.2.14	Radio Subsystem Monitor Panel (SSMP)		X	X	X	X			
3.2.15	Telemetry and Data Storage SSMP		X	X	X	X			

Table 3.7-1: SYSTEM LEVEL OSE CATEGORY: LAUNCH COMPLEX EQUIPMENT (LCE)

ITEM NO.	USE ASSIGNMENTS	KENT FACILITY, SEATTLE	SCF (AFETR)	ESA (AFETR)	AFETR MAGNETIC MAPPING	LAUNCH PAD 34	LAUNCH PAD 37	DSIF STATION	SFOF
3.2									
3.2.16	Antenna SSMP		X	X	X	X			
3.2.17	Attitude Reference		X	X	X	X			
3.2.18	Autopilot SSMP		X	X	X	X			
3.2.19	Science Payload SSMP		X	X	X	X			
3.2.20	Thermal Control SSMP		X	X	X	X			
3.2.21	Propulsion SSMP		X	X	X	X			
3.2.22	Reaction Control SSMP		X	X	X	X			
3.2.23	CC&S SSMP		X	X	X	X			
3.2.24	Power SSMP		X	X	X	X			
3.2.25	Capsule SSMP		X	X	X	X			
3.2.26	Data Processor/Formatter (Software)		X	X	X	X			
3.2.27	Antenna/Diplexer		X	X					
3.2.28	Interconnecting Cabling, ESA		X	X					
3.2.29	Portable Air Conditioning Unit	X	X	X	X	X			

Table 3.7-1: SYSTEM LEVEL OSE CATEGORY: LAUNCH COMPLEX EQUIPMENT (LCE)

ITEM NO.	USE ASSIGNMENTS	KENT FACILITY, SEATTLE	SCF (AFETR)	ESA (AFETR)	AFETR MAGNETIC MAPPING	LAUNCH PAD 34	LAUNCH PAD 37	DSIF STATION	SFOF
3.2									
3.2.30	Interconnecting Cabling, LCE		X	X	X	X			
3.2.31	Portable Cooling Unit				X	X			
MDE	As shown in usage charts for MDE								

Table 3.7-1: SYSTEM LEVEL OSE CATEGORY: SYSTEM TEST COMPLEX (STC)

ITEM NO.		USE ASSIGNMENTS: KENT FACILITY, SEATTLE	SCF (AFETR)	ESA (AFETR)	LAUNCH PAD 34	LAUNCH PAD 37	DSIF STATION	SFOF
3.3								
3.3.1	Programmer	X	X					
3.3.2	Programs (Software)	X	X					
3.3.3	Data Display and Printer	X	X					
3.3.4	Data Recorder	X	X					
3.3.5	Rack Structure and Cooling System	X	X					
3.3.6	Rack Power System, and Electrical Wiring	X	X					
3.3.7	Science Package Simulator	X	X					
3.3.8	Flight Capsule Simulator	X	X					
3.3.9	Spacecraft Dummy Electrical Simulator	X	X					
3.3.10	Centaur Data Link Processor	X	X					
3.3.11	External Cables	X	X					
	SSTE Telecommunications (STC Components)	▶ X	X					
	SSTE Electric Power (STC Components)	▶ X	X					
	SSTE Central Computer and Sequencer (STC Components)	▶ X	X					

▶ Subassembly of the noted set of SSTE.

Table 3.7-1: SYSTEM LEVEL OSE CATEGORY: SYSTEM TEST COMPLEX (STC)

ITEM NO.		USE ASSIGNMENTS	KENT FACILITY, SEATTLE	SCF (AFETR)	ESA (AFETR)	LAUNCH PAD 34	LAUNCH PAD 37	DSIF STATION	SFOF
3.3									
SSTE	Attitude Ref. and Autopilot (STC Components)	▶	X	X					
SSTE	Mechanisms-Temperature Control (STC Components)	▶	X	X					
GFE	Computer (SDS-920 or Equiv.)	▷	X	X					
GFE	Science Package Test Set	▷	X	X					
GFE	Flight Capsule Test Set	▷	X	X					
MDE	As shown in usage charts for MDE.								

▶ Subassembly of the noted set of SSTE.

▷ Government Furnished Equipment Item used in STC.

Table 3.7-1: SYSTEM LEVEL OSE CATEGORY: ASSEMBLY, HANDLING AND SHIPPING EQUIPMENT (AHSE)

ITEM NO.		USE ASSIGNMENTS: KENT FACILITY, SEATTLE	SCF (AFETR)	ESA (AFETR)	AFETR MAGNETIC MAPPING	LAUNCH PAD 34	LAUNCH PAD 37	DSIF STATION	SFOF
3.4									
	MEASUREMENT EQUIPMENT MECHANICAL								
3.4.1	Alighnment Station (less adapters)	X	X						
3.4.2	Weight/Balance Equipment	X		X					
3.4.3	Rocket Motor Alignment Fixture	X		X					
	TEST STANDS AND FIXTURES								
3.4.4	Free Mode Test Stand	X							
3.4.5	STC System Level Test Stand	X	X						
3.4.6	Mechanism Deployment Test Stand	X	X						
3.4.7	Planetary Vehicle/Nose Fairing Separation Test Fixture	X							
3.4.8	Goldstone Test Stand			GOLDSTONE					
3.4.9	Antenna Range and EI Test Fixture	X							
3.4.10	Acoustic Test Fixture	X							
3.4.11	Magnetic Mapping Test Stand	X			X				
3.4.12	Capsule Separation Test Fixture	X							

Table 3.7-1: SYSTEM LEVEL OSE CATEGORY: ASSEMBLY, HANDLING AND SHIPPING EQUIPMENT (AHSE)

ITEM NO.		USE ASSIGNMENTS: KENT FACILITY, SEATTLE,	SCF (AFETR)	ESA (AFETR)	LAUNCH PAD 34	LAUNCH PAD 37	DSIF STATION	SFOF
3.4								
	TRANSPORTATION EQUIPMENT							
3.4.13	Transport, Encapsulated Planetary Vehicle	X	X	X	X			
3.4.14	Remote Site OSE Set Transporter	X	X	X				
	OSE Transporter	X	X	X		X	X	
	SAFETY DEVICES							
3.4.16	Portable Blast Barrier	X	X	X	X			
3.4.17	Radiation Barrier	X	X					
3.4.18	Propellant Shields	X	X					
	WORK PLATFORM SETS AND ACCESS EQUIPMENT							
3.4.19	S/C Assembly Platform Set	X	X					
3.4.20	ESA Testing Platform Set	X	X					
3.4.21	STC Testing Platform Set	X	X					
3.4.22	Goldstone Platform Set		GOLDSTONE					
3.4.23	Kent Space Chamber Platform Set	X						

Table 3.7-1: SYSTEM LEVEL OSE CATEGORY: ASSEMBLY, HANDLING AND SHIPPING EQUIPMENT (AHSE)

ITEM NO.		USE ASSIGNMENTS: KENT FACILITY, SEATTLE	SCF (AFETR)	ESA (AFETR)	LAUNCH PAD 34	LAUNCH PAD 37	DSIF STATION	SFOF
3.4								
	WORK PLATFORM SETS AND ACCESS EQUIPMENT (Cont.)							
3.4.24	Encapsulation Area Platform Set		X					
3.4.25	Capsule Installation Platform Set	X	X	X				
3.4.26	Weight/Balance Area Platform Set	X		X				
3.4.27	Umbilical Installation Access Equipment				X	X		
3.4.28	Simulator Usage Access Equipment	X	X	X	X	X		
3.4.29	Encapsulated Planetary Vehicle Installation to Launch Vehicle Access Equipment				X	X		
3.4.30	OSE Operation Access Equipment	X	X	X				
	DOLLYS, TRUCKS (SHOP) AND INSTALLATION DEVICES							
3.4.31	General Purpose Dolly for Voyager Components	X	X	X				
3.4.32	Spacecraft Components Installation Device	X	X	X				
	PROTECTIVE COVERS							
3.4.33	STC Area Protective Cover	X	X					

Table 3.7-1: SYSTEM LEVEL OSE CATEGORY: ASSEMBLY, HANDLING AND SHIPPING EQUIPMENT (AHSE)

ITEM NO.		USE ASSIGNMENTS: KENT FACILITY, SEATTLE	SCF (AFETR)	ESA (AFETR)	LAUNCH PAD 34	LAUNCH PAD 37	DSIF STATION	SFOF
3.4								
	PROTECTIVE COVERS (Continued)							
3.4.34	Goldstone Protective Cover			GOLDSTONE				
3.4.35	Simulated Nose Fairing	X	X	X				
3.4.36	Portable Clean Rooms	X	X	X	Also GOLDSTONE			
3.4.37	Fueling Protective Devices	X		X				
3.4.38	Transport or Storage Cover	X	X	X				
3.4.39	Sterilization Enclosure	X		X				
	SHIPPING CONTAINERS							
3.4.40	Spacecraft Container	X	X	Also GOLDSTONE				
	LIFTING DEVICES							
3.4.41	Planetary Vehicle With Nose Fairing	X		X		X	X	
3.4.42	Planetary Vehicle	X	X	X				
3.4.43	Flight Spacecraft	X	X	X				

Table 3.7-1: SYSTEM LEVEL OSE CATEGORY: ASSEMBLY, HANDLING AND SHIPPING EQUIPMENT (AHSE)

ITEM NO.		USE ASSIGNMENTS: KENT FACILITY, SEATTLE	SCF (AFETR)	ESA (AFETR)	LAUNCH PAD 34	LAUNCH PAD 37	DSIF STATION	SFOF
3.4								
	LIFTING DEVICES (Continued)							
3.4.44	Sling Set for System Level	X	X	X	X	X		
3.4.45	OSE Lifting and Installation Set	X	X	X	X	X	X	X
	INSTALLATION KITS AND ASSEMBLY JIGS							
3.4.46	Planetary Vehicle to Launch Vehicle Kit	X			X	X		
3.4.47	Nose Fairing to Planetary Vehicle Kit	X		X				
3.4.48	Capsule to Flight S/C Kit	X	X	X				
3.4.49	Flight S/C to S/C Adapter Kit	X	X	X				
3.4.50	Science Payload to S/C Bus Kit	X	X	X				
3.4.51	S/C Bus Jig	X	X					

Table 3.7-1: SYSTEM LEVEL OSE CATEGORY: MAGNETIC MAPPING EQUIPMENT

ITEM NO.		USE ASSIGNMENTS: KENT FACILITY, SEATTLE	SCF (AFETR)	ESA (AFETR)	MAGNETIC MAPPING AFETR	LAUNCH PAD 34	LAUNCH PAD 37	DSIF STATION	SFOF
3.6									
3.6.1	X-Y Plotter	X		X					
3.6.2	Air Conditioning Hose Set	X		X					
3.6.3	Fluxgate Magnetometer	X		X					

P 4 - 5

- check telecommunication [illegible]
- model [illegible]

CONTENTS

4.0 FUNCTIONAL DESCRIPTIONS—SUBSYSTEM LEVEL—OPERATIONAL SUPPORT EQUIPMENT

4.1 Telecommunications OSE
- 4.1.1 Equipment Identification and Intended Usage
- 4.1.2 Design Concepts, Requirements and Constraints
- 4.1.3 Functional Description
- 4.1.4 Interface Definition
- 4.1.5 Performance Parameters
- 4.1.6 Safety Considerations
- 4.1.7 Test

4.2 Electrical Power OSE
- 4.2.1 Equipment Identification and Usage
- 4.2.2 Requirements and Constraints
- 4.2.3 Applicable Documentation
- 4.2.4 SSTE Functional Description
- 4.2.5 Interface Definition
- 4.2.6 Performance Parameters
- 4.2.7 Physical Characteristics and Constraints
- 4.2.8 Safety
- 4.2.9 Electrical Power SSTE Checkout and Test

4.3 Propulsion and Reaction Control Subsystem OSE
- 4.3.1 Equipment Identification and Intended Use
- 4.3.2 Design Concepts, Requirements and Constraints
- 4.3.3 Applicable Documents
- 4.3.4 Functional Description
- 4.3.5 Interface Definition
- 4.3.6 Performance Parameters
- 4.3.7 Physical Characteristics and Constraints
- 4.3.8 Safety Considerations
- 4.3.9 Test

4.4 Engineering Mechanics—Operational Support Equipment
- 4.4.1 Mechanisms—Operational Support Equipment
- 4.4.2 Pyrotechnic Subsystem Operational Support Equipment

4.5 Space Science

4.6 Attitude Reference and Autopilot OSE Functional Requirements
- 4.6.1 Equipment Identification and Intended Usage
- 4.6.2 Design Concepts Requirements and Constraints
- 4.6.3 Applicable Documents
- 4.6.4 Functional Description
- 4.6.5 Signal Interface List
- 4.6.6 Performance Parameters
- 4.6.7 Physical Characteristics
- 4.6.8 Safety Considerations
- 4.6.9 Test

4.7 Central Computer and Sequencer OSE
- 4.7.1 Equipment Identification and Intended Usage
- 4.7.2 Design Concept
- 4.7.3 Applicable Documents
- 4.7.4 Functional Description
- 4.7.5 Interface Definitions
- 4.7.6 Performance Parameters
- 4.7.7 Physical Characteristics and Constraints
- 4.7.8 Safety Considerations
- 4.7.9 Tests

4.0 FUNCTIONAL DESCRIPTION OF SUBSYSTEM LEVEL

OPERATIONAL SUPPORT EQUIPMENT

This section identifies and functionally describes the subsystem level equipment provided for support of the 1971 Mars orbital mission where this support is at the subsystem level. The previous section described the system level OSE and no more will be said about it except as related to interface areas. OSE for all the subsystems including the science payload is included. Where possible, an attempt has been made to relate this OSE to or derive it from the subsystem OSE of Mariner "C" and Lunar Orbiter. The subsystem OSE usage is identified; design concepts are described; applicable documentation is referenced; a functional description given; interface areas and considerations are indicated; special equipment performance features are indicated where applicable; characteristics described, safety considerations pointed out; and the approach to qualification and acceptance testing of the equipment outlined. In some cases, trade studies are required to achieve a good practical OSE design and these are identified in this section, as is the testing required to develop and accept the subsystem OSE. A great deal of flexibility in the combining and utilization of the subsystem OSE is inherent in the concept and it should not be construed that particular combinations described in this section are limiting except where so indicated.

4.1 TELECOMMUNICATIONS OSE

4.1.1 Equipment Identification and Intended Usage

The test sets and handling equipment identified below will be used during all bench level tests of the appropriate telecommunication subsystems. This equipment has the capability of providing fault isolation to the component level and with minor modifications it will be integrated into the Systems Test Complex to support the spacecraft system level tests.

1) Telemetry and Data Storage Subsystem Test Set
2) Relay Radio Subsystem Test Set
3) Radio Subsystem Test Set

The following AHSE equipment fixtures will be used in association with the subsystem test sets:

1) Data Recorder Shipping Container
2) Telemetry Processor Shipping Container
3) Relay Radio Shipping Container
4) Radio Exciter/Receiver Shipping Container
5) Power Amplifier Shipping Container
6) Power Amplifier Package Cooling Equipment Assembly
7) Component Mounting Interface Mockup

4.1.2 Design Concepts, Requirements and Constraints

The basic design concept for the telecommunications test equipment is based on standard testing techniques and off-the-shelf equipment designs. This equipment shall have the capability of operating independently and also as part of the STC. Records of all testing from the subsystem level testing on will be kept so that trend analysis of the telecommunication system can be performed. These records shall be maintained in a form compatible with the computer used to perform trend analysis.

4.1.3 Functional Description

4.1.3.1 Spacecraft Telemetry and Data Storage Subsystem Test Set

The Spacecraft Telemetry and Data Storage Subsystem (TDSS) consists of planetary science tape recorders, spacecraft engineering and capsule data core memories, engineering multiplexer encoder, subcarrier frequency and bit rate generator, mode command decoder and format generator, master digital mixer, block encoder, bi-phase modulators, subcarrier selectors, gain controls and frequency combiner. Descriptions of these elements are found in Volume A. The TDSS Test Set is required to provide necessary power, simulate interface input signals, monitor output data and display the results for proper interpretation. Testing is required for qualification, functional checkout, reliability and malfunction analysis requirements.

The TDSS Test Set is capable of activating, monitoring and/or measuring all subsystem parameters required for mission success. Briefly, these parameters will be such things as redundancy control switching, mode

sequencing, pass band characteristics, recorder bit errors, storage bit errors, effects of power supply variations, ripple and transients, system accuracy, data format, subcarrier frequencies, bit rates, PN code generation and 5/16 block code generation.

Operation--The TDSS Test Set Block Diagram is shown in Figure 4.1-1. A paper tape reader will be used to sequence the test cycles, data simulators, TDSS operating modes, readout equipment and output data printer or recorder. This will make possible controllable test cycles and ease of testing. An oscilloscope is provided for malfunction analysis. The design of the Test Set will permit its use with environmental test equipment during type approval testing. It will also be a multiuse design such that certain subsets can be used independently of the main set for special or restricted testing. Both analog and digital input signals are simulated to test the TDSS. PCM inputs are formatted to simulate planetary science, cruise science or capsule data outputs. Analog test signals for the engineering multiplexer are generated in a D-A converter by a digital word command. This digital word is then used as the reference to check the system response. The TDSS format simulator is set to the same mode as the Spacecraft telemetry for readout. Input-output data comparison will require input data encoding and delay storage because of the TDSS multiplexing and encoding delay. Digital comparison is made on a bit by bit basis.

Analog channel checkout will determine that defined limits are not exceeded. The data recovery process consists of subcarrier synchronization, bit synchronization, master frame synchronization, subsystem frame synchronization,

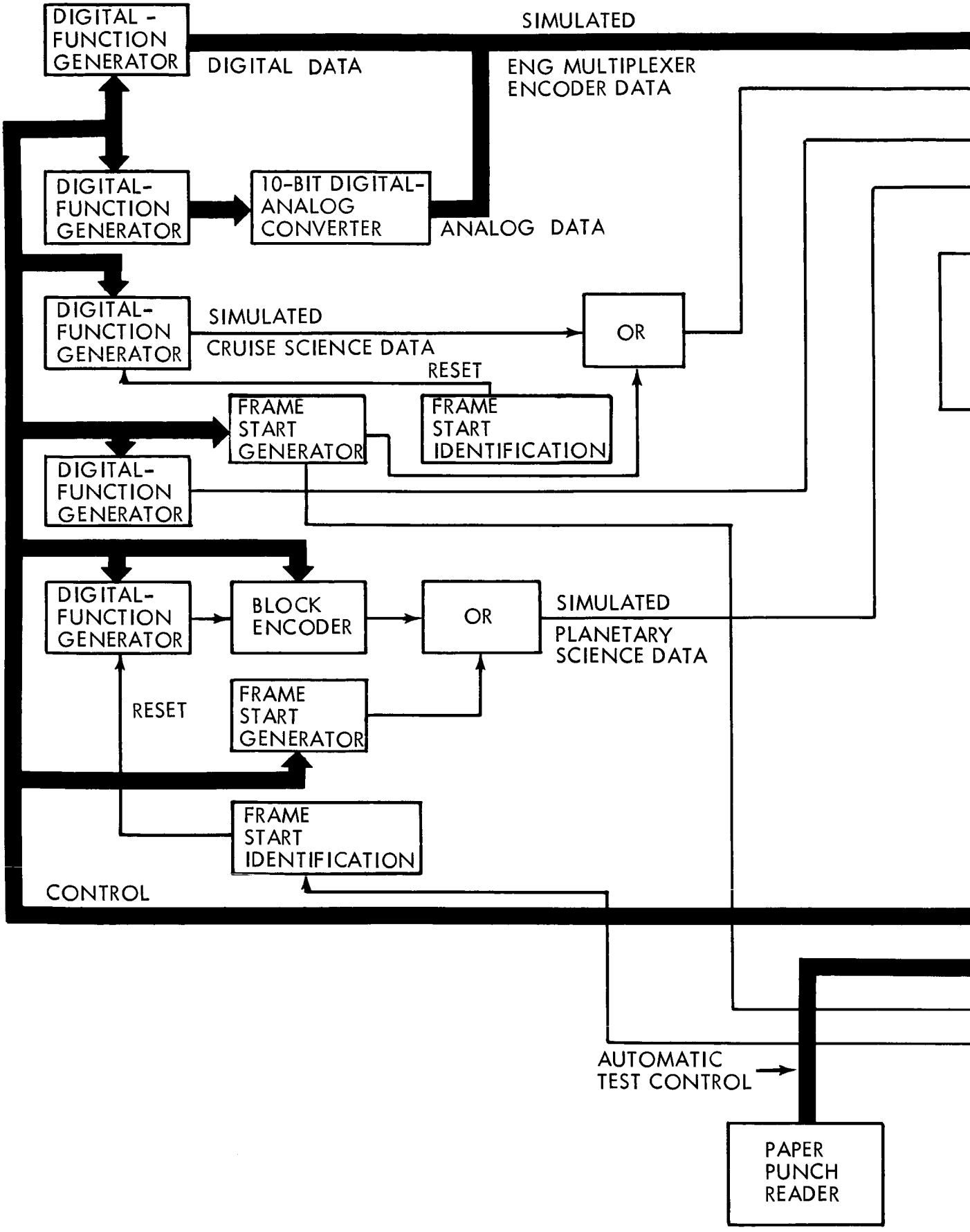
DIGITAL - FUNCTION GENERATOR
SIMULATED
DIGITAL DATA
ENG MULTIPLEXER ENCODER DATA
DIGITAL-FUNCTION GENERATOR
10-BIT DIGITAL-ANALOG CONVERTER
ANALOG DATA
DIGITAL-FUNCTION GENERATOR
SIMULATED
CRUISE SCIENCE DATA
OR
RESET
FRAME START GENERATOR
FRAME START IDENTIFICATION
DIGITAL-FUNCTION GENERATOR
DIGITAL-FUNCTION GENERATOR
BLOCK ENCODER
OR
SIMULATED
PLANETARY SCIENCE DATA
RESET
FRAME START GENERATOR
FRAME START IDENTIFICATION
CONTROL
AUTOMATIC TEST CONTROL
PAPER PUNCH READER

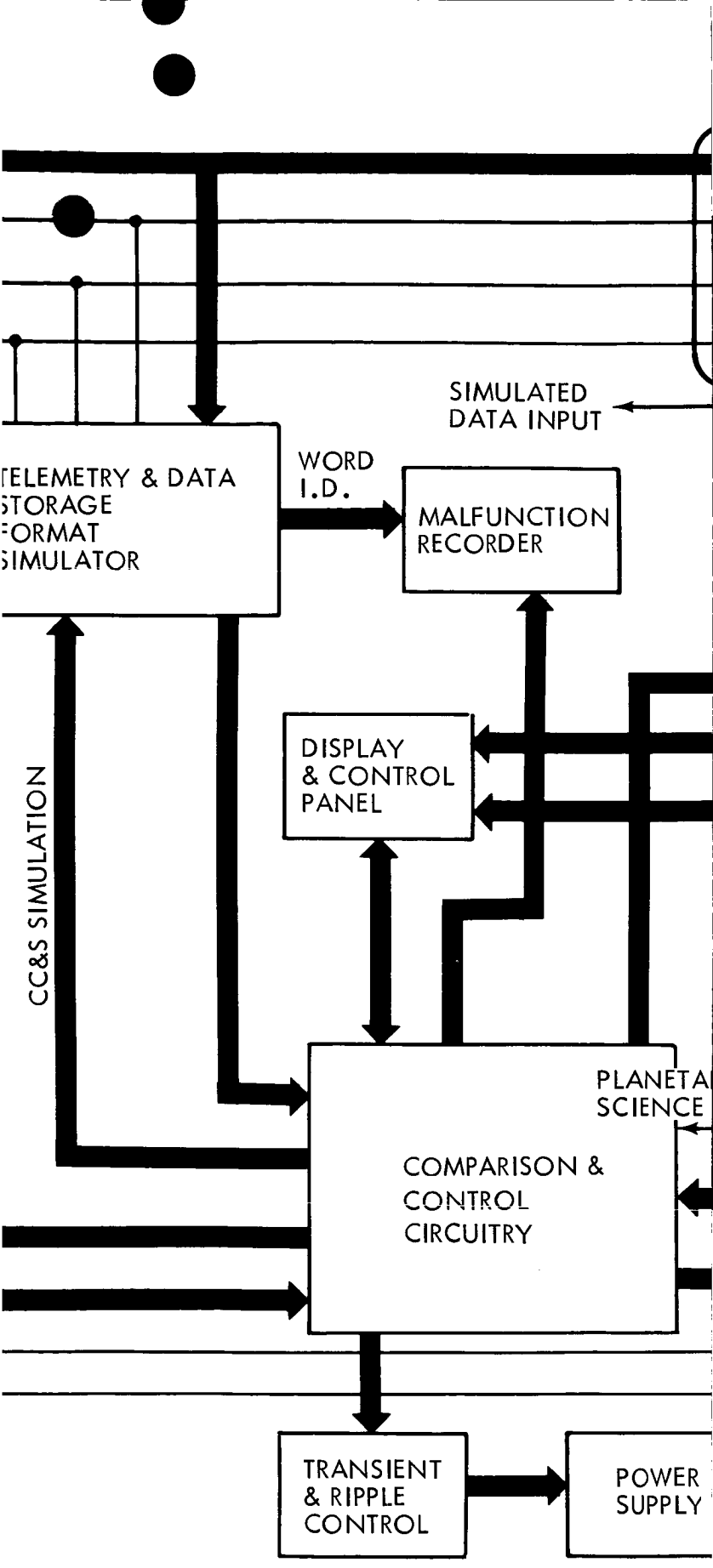
SIMULATED
DATA INPUT
TELEMETRY & DATA
STORAGE
FORMAT
SIMULATOR
WORD
I.D.
MALFUNCTION
RECORDER
DISPLAY
& CONTROL
PANEL
CC&S SIMULATION
PLANETA
SCIENCE
COMPARISON &
CONTROL
CIRCUITRY
TRANSIENT
& RIPPLE
CONTROL
POWER
SUPPLY

Figure

5 (2)

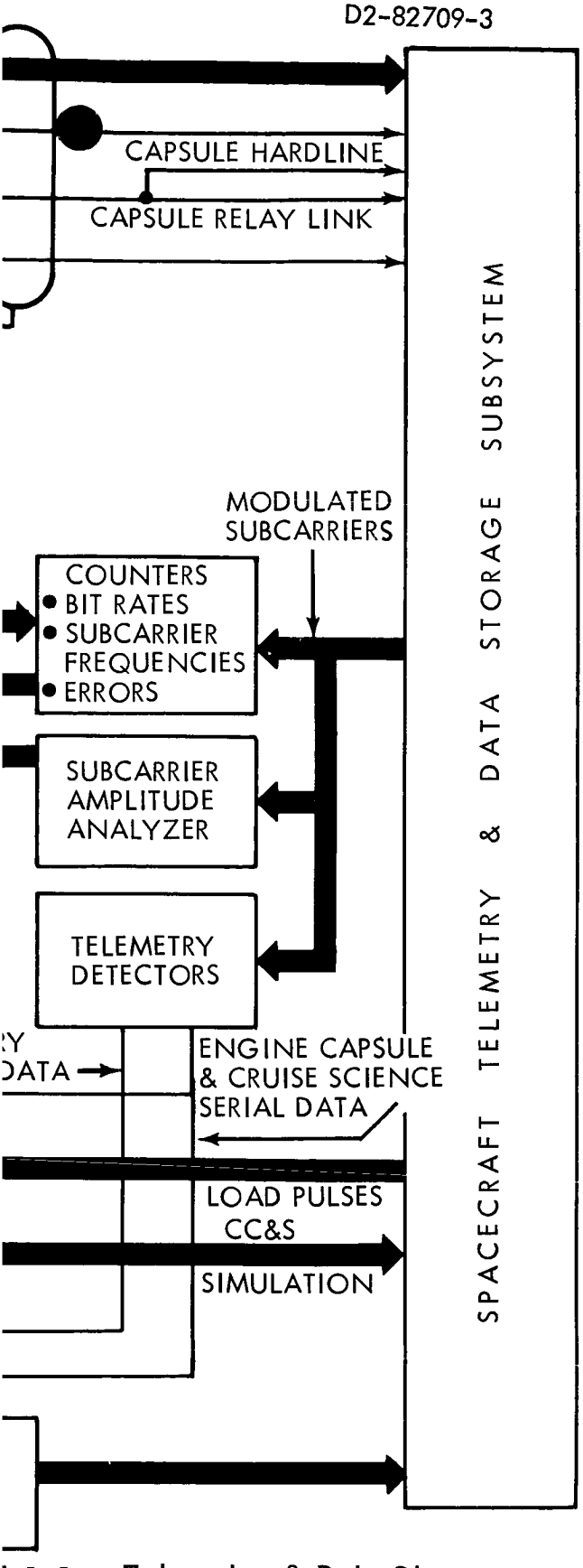

I.1-1 Telemetry & Data Storage Subsystem Test Set

and word selection. Malfunctions are indicated by printing the word identification and the erroneous word.

The TDSS Test Set has two basic modes of operation; manual and automatic. The manual mode is used for special tests; such as, malfunction analysis or detail pulse characteristics. Power supply voltages will be continuously monitored and out of tolerance conditions will cause immediate shutdown.

Calibration and certification of the test set is accomplished manually by using an oscilloscope and a digital voltmeter. Format certification is done by using a slow bit rate and recording on a strip chart.

The automatic mode will be used for the bulk of testing. This mode of testing will permit the establishment of standard test series which are repeatable. Such a capability is required to generate data which lends itself to trend analysis.

Equipment--All data sources to the TDSS are generated by Digital Function Generators (Figure 4.1-2). The output of one function generator is converted to analog form by the 10 bit D/A converter. This signal represents the analog stimuli to the TDSS Engineering Multiplexer and Encoder.

As the signals are generated, they are routed to the TDSS Format Simulator which functions in a similar manner as the Spacecraft TDSS (with the exception that the Format Simulator does not contain planetary science, subcarrier or modulator circuitry). The TDSS subcarrier data is detected

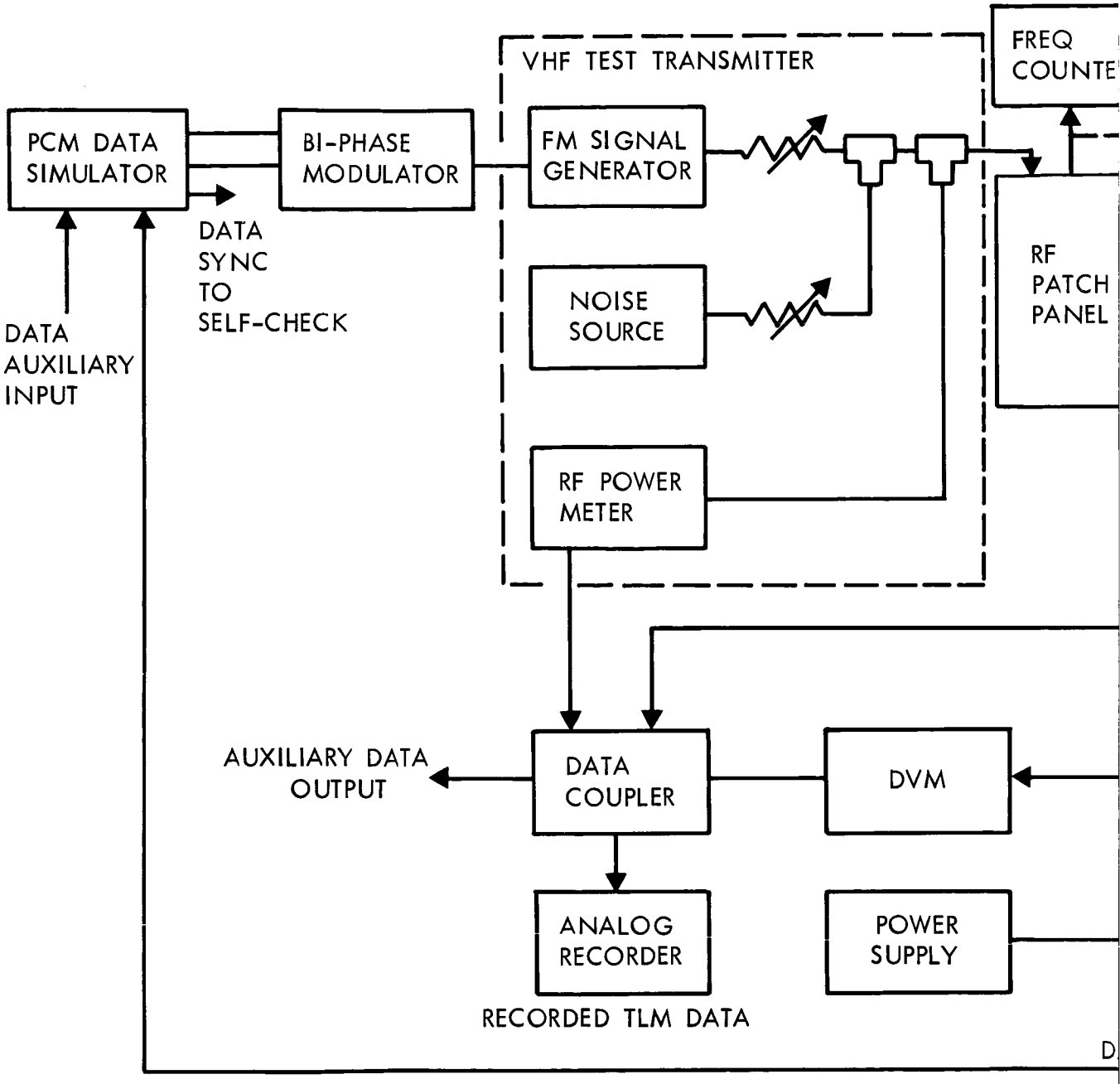
VHF TEST TRANSMITTER
FREQ
COUNTE
PCM DATA
SIMULATOR
BI-PHASE
MODULATOR
FM SIGNAL
GENERATOR
DATA
SYNC
TO
SELF-CHECK
NOISE
SOURCE
RF
PATCH
PANEL
DATA
AUXILIARY
INPUT
RF POWER
METER
AUXILIARY DATA
OUTPUT
DATA
COUPLER
DVM
ANALOG
RECORDER
POWER
SUPPLY
RECORDED TLM DATA

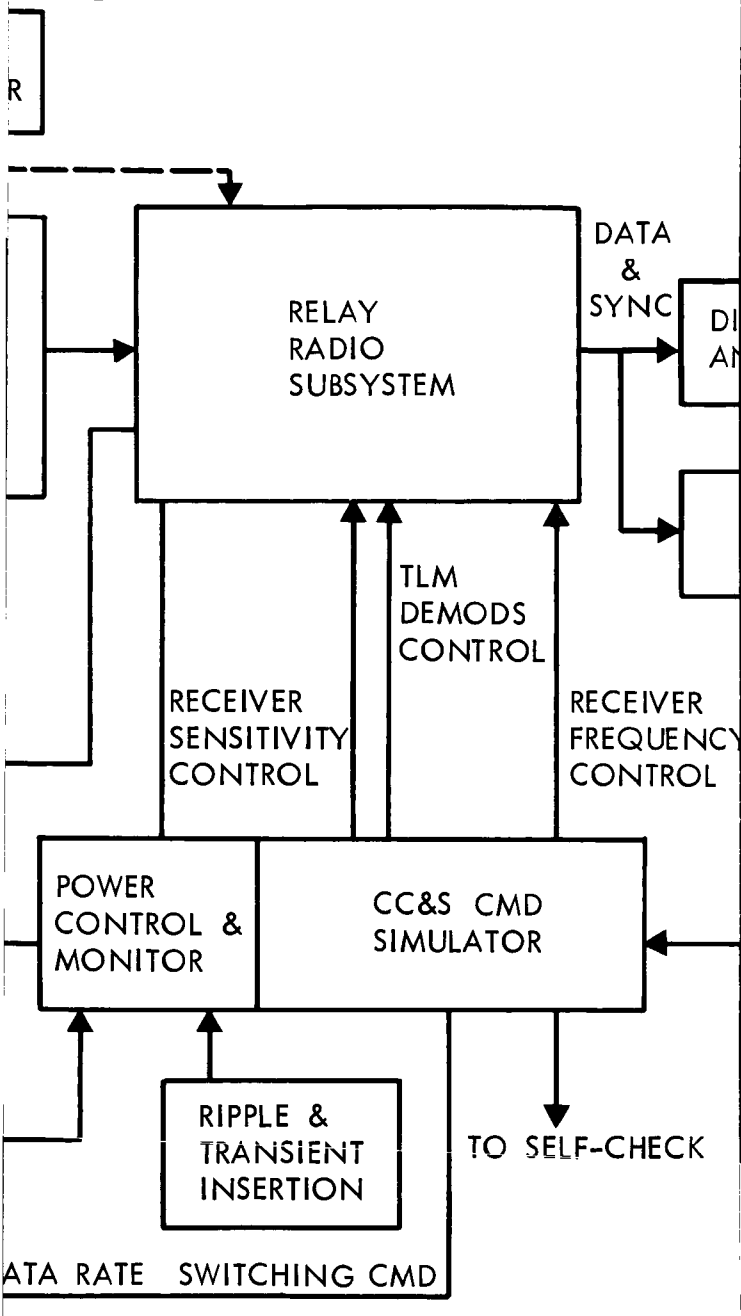
R
RELAY
RADIO
SUBSYSTEM
DATA
&
SYNC
DI
AN
TLM
DEMODS
CONTROL
RECEIVER
SENSITIVITY
CONTROL
RECEIVER
FREQUENCY
CONTROL
POWER
CONTROL &
MONITOR
CC&S CMD
SIMULATOR
RIPPLE &
TRANSIENT
INSERTION
TO SELF-CHECK
ATA RATE SWITCHING CMD

Figure 4.1-

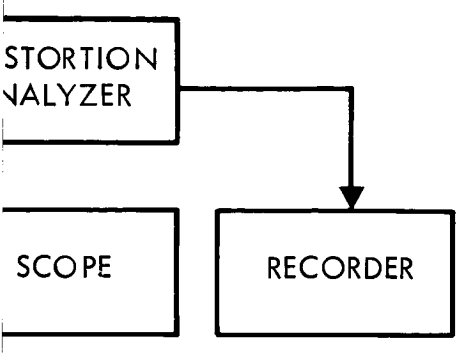

AUXILIARY COMMAND
SEQUENCING INPUT

2: Spacecraft Relay Radio Subsystem Test Set — Functional Block Diagram

and compared to the output of the Format Simulator. Except for a constant fixed delay (which is predictable) the output from the telemeter detectors and format simulators should be identical on a bit by bit basis. Any deviation from this identical comparison is recorded on the malfunction recorder along with word identification. The comparison and check operation described does not include playback of stored information. Evaluation of this data is accomplished by identifying large blocks of data by an identification start word prior to routing to the TDSS. On playback these words are detected and the applicable Digital Function Generators are forced to a reset position. The generation of the simulation data is then controlled by the recovered bit synchronization signals. In this manner simulated data and TDSS playback data are in synchronization and proper bit by bit comparison can be made.

4.1.3.2 Spacecraft Relay Radio Subsystem Test Set

The Relay Radio Subsystem Test Set will be used to functionally check the operation of the Relay Radio Subsystem. The required test functions of the spacecraft relay radio subsystem test set are:

1) Provide a sensitivity check of the relay radio subsystem;
2) Verify that the subsystem can properly pass a simulated data signal at the various bit rates encountered during the mission;
3) Measure the bandwidth of the subsystem;
4) Verify the dynamic range of the subsystem;
5) .Verify proper operation of the RF attenuator;
6) Verify proper operation of local oscillator switchover in the VHF receiver;

7) Ensure that there are no spurious outputs from the telemetry detector;

8) Measure the characteristics of the data outputs of the telemetry detector to see if they are within the specified limits;

9) Measure the frequency accuracy, and the short- and long-term stability of the local oscillators in the VHF receiver;

10) Measure the power consumption of the subsystem and determine the effect of input voltage variations;

11) Determine the effect upon subsystem performance of induced ripple and transients in input power, input signal and control lines;

12) Measure the bit error rate of the subsystem;

13) Verify demodulation data rate switching;

14) Perform threshold tests on both frequencies.

Operation--The test set will provide two frequency modulated VHF signals of variable power level to the unit under test. A block diagram of the test set is shown in Figure 4.1-2. A PCM simulator will be used to generate simulated capsule data. The generator will provide data at two rates, 11-1/9 bps and 166-2/3 bps switchable from a simulated CC&S command from the command and power control panel. Monitor circuitry will be incorporated to measure signal format and output level to provide a means of simulator self-check. The output of the PCM simulator is fed into a bi-phase modulator which drives the VHF test transmitter. The VHF test transmitter will be a specially designed unit to meet the signal stability requirements of 1 part in 10^6 and to provide adequate shielding against spurious signals into the input of the subsystem receiver. The signal source will be a crystal controlled oscillator for stability multiplied

up to the 100-Mc range. Precision variable attenuators will be provided to reduce the oscillator output to the -122 dbm signal level required to check the receiver threshold sensitivity at both input frequencies. A variable level noise source will be provided to supply a variable signal to noise ratio.

An RF power meter will be provided to monitor the signal output level of the test transmitter. The bandpass of the system will be checked by varying the frequency of the test transmitter and monitoring the telemetry detector output, noting the frequency at which data is unacceptable. The data rates will be varied as well as the frequency of the input to simulate doppler effects at capsule separation. Automatic switching of the RF attenuator will be checked by decreasing the signal level into the receiver and noting the level at which switchover occurs.

Measurement of the local oscillators' accuracy and stability will be accomplished with the frequency counter at test points on the receiver. The output of the test transmitter will be monitored with a frequency counter to ensure that the signal is at the correct frequency and at the proper level.

The data and sync outputs of the telemetry detector will be monitored with an oscilloscope for spurious outputs and output level wave shape characteristics. The distortion analyzer will be used to measure the harmonic content of the detector output signal. An analog recorder will be provided to record the output of the distortion analyzer or telemetry monitor points of the subsystem. The Command and Power Control Panel will

provide dc power control and monitor of the subsystem as well as simulated CC&S commands for L.O. switchover, RF attenuator disconnect and data rate switching. A digital voltmeter will be provided to measure power, control and telemetry voltages. The Ripple and Transient insertion panel will provide a means of inserting controlled quantities of ac ripple and transients of varying amplitude, width and repetition rate on the hardware inputs and outputs of the system. DC power to the subsystem will be supplied by a precision regulated power supply.

The relay radio test set includes the following equipment:

1) PCM Data Simulator--A PCM simulator which will generate a 7-bit PCM word at variable bit rates upon command. A portion of this simulator will be an input register by which data can be entered from an external source. Monitor circuitry will be provided to check output signal format and levels. A visual indication of out of tolerance condition will be provided on the front panel as well as remotely for self-check purposes.
2) Bi-Phase Modulator--A modulator which provides PSK modulation to one of two possible subcarriers. This unit will have the same performance characteristics as the capsule phase modulator.
3) VHF Test Transmitter--A specially designed unit to provide a very stable carrier in the VHF band at varying RF output power levels. A noise source is provided to impose known amounts of noise upon the data.
4) RF Patch Panel--A unit to couple RF energy into the subsystem and provide for insertion of test equipment loads and attenuators into the RF System.

5) Ripple and Transient Insertion Panel--A sine wave generator and pulse generator with coupling circuitry to allow ripple and transients to be impressed on input power, input signal and output signal lines.

6) Command and Power Control Panel--A panel which permits control and monitor of the dc power into the subsystem and also simulates sending of CC&S commands. Commands and controls on this panel can be operated manually or programmed from a remote source. Monitor of critical power and control functions is provided for self-check purposes.

7) Data Coupler--A unit which takes the output of the DVM, electronic counter and telemetry monitors, converts them to a common format for input to the printer or auxiliary data input.

4.1.3.3 Spacecraft Radio Subsystem Test Set

The Spacecraft Radio Subsystem Test Set will be used to functionally check the operation of the Spacecraft Radio Subsystem. The required functions of the Spacecraft Radio Subsystem Test Set are:

1) Perform a check of phase lock tracking;

2) Check the command reception and detection of the subsystem, monitor command bit error;

3) Measure the RF power output of the transponder;

4) Check the transmitter output for spurious modulation;

5) Measure ranging signal delay through the subsystem;

6) Measure the subsystem sensitivity;

7) Measure the dynamic range of the subsystem;

8) Measure telemetry modulation deviation;

9) Measure incidental phase modulation;

10) Measure receiver local oscillator stability and accuracy;

11) Measure receiver bandwidth;

12) Determine effects on subsystem performance due to input voltage variations;

13) Determine the effects of ripple and transients on input power and signal lines;

14) Redundant switching.

Operation--Figure 4.1-3 shows a block diagram of the test equipment configuration for testing of the Radio Subsystem. In brief, the RF test equipment consists of:

1) A test transmitter and receiver integrally combined to achieve the high frequency stability transmission and reception at the 240/221 frequency ratio and the necessary radio frequency interference suppression;

2) An RF patch panel to facilitate tests made in the different antenna modes;

3) A command modulator which simulates the actual PN code, bit rates, and command data;

4) A T/M subcarrier, simulated PCM Data and sync to simulate T/M input to the Radio Subsystem from space vehicle T/M and storage;

5) Command and Power Control for actuating the mode switching, redundancy control functions and input controlling power in accordance with test configuration desired;

6) Analog recorder and digital voltmeter;

7) Command Data Comparator;

8) Ranging Test unit;

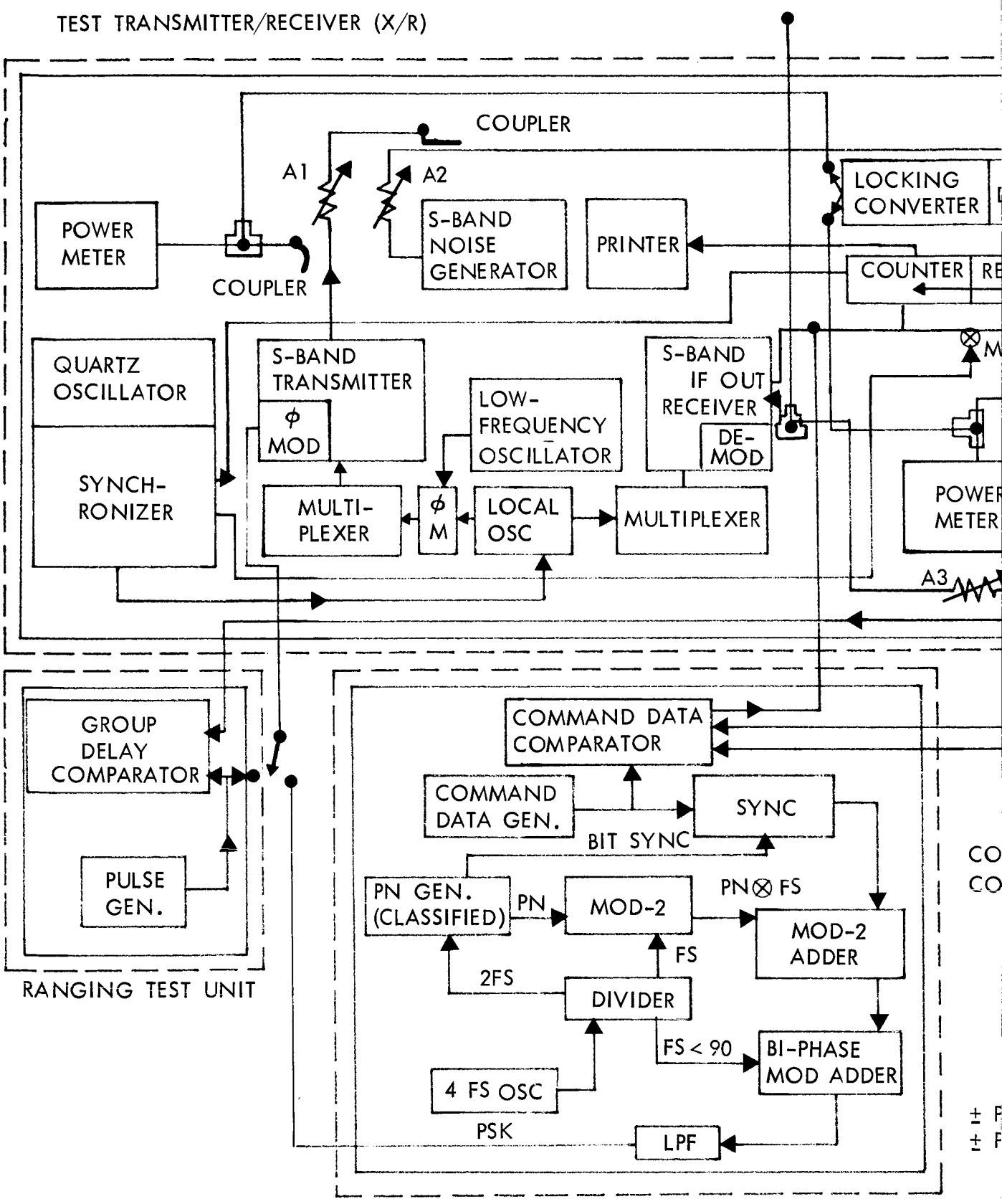
TEST TRANSMITTER/RECEIVER (X/R)
COUPLER
A1
A2
POWER METER
COUPLER
S-BAND NOISE GENERATOR
PRINTER
LOCKING CONVERTER
COUNTER
QUARTZ OSCILLATOR
S-BAND TRANSMITTER
φ MOD
LOW-FREQUENCY OSCILLATOR
S-BAND IF OUT RECEIVER
DE-MOD
SYNCH-RONIZER
MULTI-PLEXER
φ M
LOCAL OSC
MULTIPLEXER
POWER METER
A3
GROUP DELAY COMPARATOR
PULSE GEN.
RANGING TEST UNIT
COMMAND DATA COMPARATOR
COMMAND DATA GEN.
SYNC
BIT SYNC
PN GEN. (CLASSIFIED)
PN
MOD-2
PN⊗FS
MOD-2 ADDER
FS
2FS
DIVIDER
FS < 90
BI-PHASE MOD ADDER
4 FS OSC
PSK
LPF

170

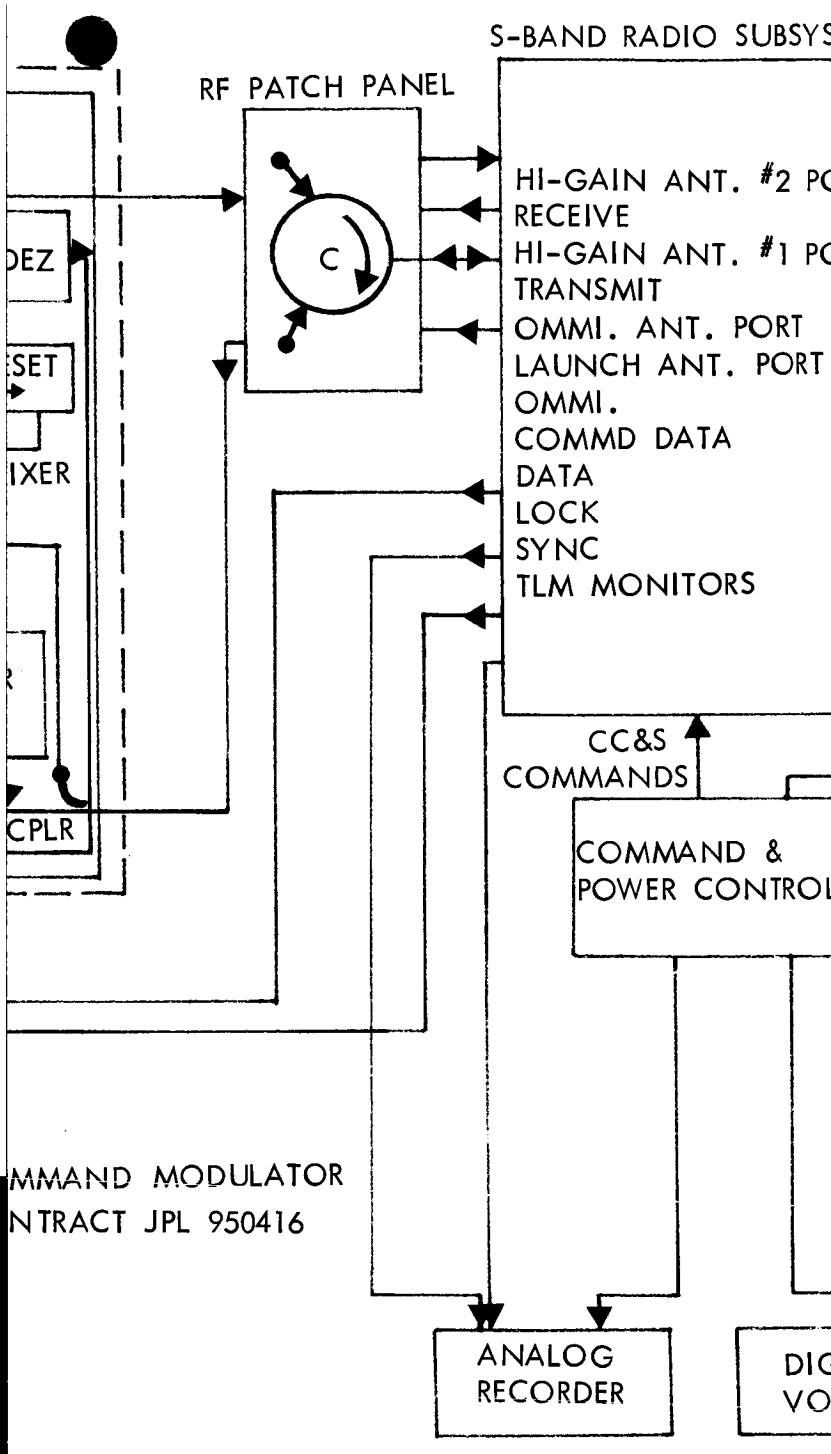

N ⊗ FS X FS < 90
N ⊗ 2 FS

Figure 4.1-

17 (2)

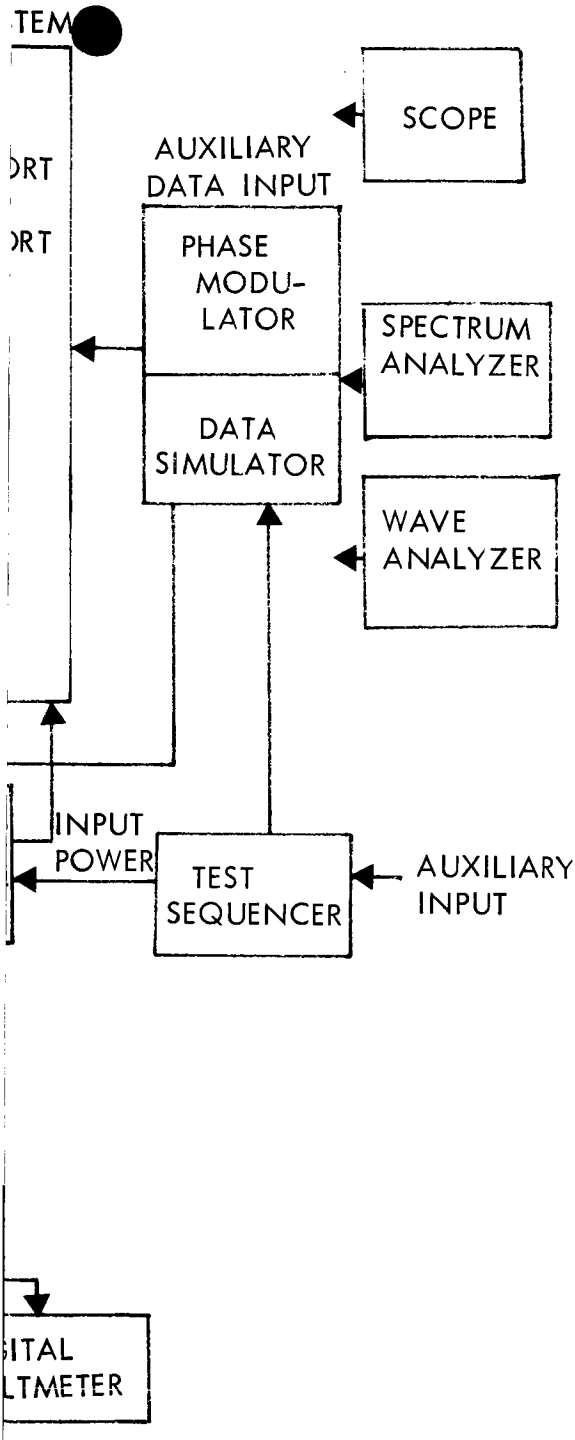

-3: Spacecraft Radio Subsystem Test Set — Functional Block agram

9) Scope, Spectrum Analyzer, and wave analyzer for general tests concerned with spurious outputs, IPM, and modulation index.

RF Output Power--A power meter in the test Transmitter/Receiver will enable composite RF power measurements for any and all modes of subsystem operation. Spectral power measurements and comparisons are made with the spectrum analyzer, which is calibrated by insertion of the test transmitter signals at levels monitored by a power meter.

Spurious Modulation--The spectrum analyzer and the wave analyzer provide a broad capability for detecting, identifying, and measuring spurious modulation. Point A is provided on the Transmitter/Receiver to permit use of Attenuator A_3, in reducing the power level received from the subsystem under test.

Delay--The delay that is measured must correspond to group or envelope delay to be consistent with range units. Therefore, a group delay comparator measures the delay that occurs between the test transmitter input pulses, similar in bit rate and shape to ranging pulses which modulate the test transmitter, and between pulses which are the phase demodulated subsystem command output. The demodulation is chosen from the phase locking converter/phase demodulator rather than that of the test receiver in order to minimize test circuit delay. The converter automatically compensates for the frequency translation of the subsystem and can provide test circuit delay calibration by connecting directly to the test transmitter output at a point closest to the subsystem input.

Sensitivity--The subsystem has several sensitivities, i.e., that relating to carrier phase lock operation under doppler offset and doppler rate at threshold and strong signals; and that relating to command bit error. Because numerous parameters affect sensitivity, the following table contains parameter combinations contributing to failure:

PHASE LOCK FAILURE

Item	Input Pwr. Level	S/N	Doppler Offset	Doppler Rate
1	Phase Demod. Threshold	N*	Fixed	Increase to Failure
2	Phase Demod. Threshold	N*	Increase to Failure	Fixed
3	Strong		Fixed	Increase to Failure
4	Strong		Increase to Failure	Fixed
5	Below Threshold	0	0	0
Command Det. Failure (assuming phase lock functioning)				
6	Command Det. Threshold	N*		
7	Decrease to Failure	0		
	"	N*		

* Noise added (db) = Signal in (db) - Noise Figure (db) - Demodulation threshold (db).

Dynamic Range--The sensitivities of the previous test provide the lower level of the dynamic range relating to failure. Operational dynamic range is determined by the AGC as monitored at a test point and by T/M output. The dynamic range is tested by varying the power level of an unmodulated test transmitter signal inserted into the subsystem over a power range

which encompasses the whole AGC range. A comparison is made of the AGC control voltage with the expected curve; noting the extreme limits, i.e., at high power where AGC levels off and at low power where AGC shifts to an "off the curve" point ("out of phase lock condition").

T/M Modulation Deviation--The telemetry subcarrier modulation deviation test is conducted by observing the S/S transmitter output on the spectrum analyzer and introducing a simulated PCM Telemetry signal to the subsystem input at the correct modulation and voltage level. Measuring the carrier and side band levels will permit calculation of the modulation deviation.

IPM--Use of the spectrum analyzer at the S/S transmitter output and at the test receiver IF out with no transmitter modulation will give satisfactory measurement of IPM in both coherent and auxilliary transmission modes.

Auxilliary Oscillator Accuracy and Stability--The accuracy and stability are measured with no RF input so that the subsystem output is that of the Auxilliary Oscillator which can be sampled at any of the transmitter antenna ports and patched into the receiver of the Transmitter/Receiver which converts it to a lower frequency. The LO of the receiver is stabilized by a synchronizer and is held to better than 1 part in 10^{10} short term stability by the quartz oscillator. Therefore the counter, which derives its time base from the synchronizer, will make satisfactory accuracy measurements of the auxilliary oscillator frequency when measured at the receiver IF output.

The stability is measured by mixing the test receiver IF output with a synchronizer output frequency that presents a difference frequency to the reset unit associated with the counter. The present unit is set so that it will determine when a specific number of difference frequency periods have elapsed. The counter will count over this period of time. This period is related to the short time stability interval so that by observing the count variance the stability of the auxiliary oscillator can be determined.

The difference frequency is selected primarily on the basis of counter time interval resolution and is determined from $f = f_e \frac{(\Delta T - T)}{\Delta T}$ where f = difference frequency f_e = frequency shift expected during stability interval, ΔT = stability interval, and T = counter time interval resolution.

Receiver Bandwidth--This bandwidth refers to the modulation bandwidth and is measured by recording a data signal amplitude at the output from the receiver phase detector as the rate of the pulse generator in the Ranging Test unit is varied.

Effects on Input Voltage Variation--All of the above tests will be conducted over the full input voltage range. Any parameters out of tolerance caused by this condition will be noted and proper corrective action taken.

Effects of Ripple and Transients--Ripple and Transients of the specified magnitude will be impressed on input power, input signal and output signal lines with the ripple and transient insertion panel. The

oscilloscope, wave analyzer and spectrum analyzer will be utilized to analyze the outputs of the subsystem to insure no degradation of signals results from this test.

Verify Redundant Circuits--During whichever of the above tests it is applicable, redundant circuitry will be switched in so that the test is accomplished in all possible configurations.

Radio Test Set Equipment includes:

1) Test Transmitter/Receiver (X/R) -- The Test Transmitter/Receiver provides a modulated S band carrier of variable power level to simulate command and ranging input data into the radio subsystem and an S band receiver-phase demodulator to receive retransmitted ranging data and telemetry data. The unit utilizes a highly stable quartz crystal controlled common local oscillator for both the transmitter and receiver. A noise source is provided to simulate signals at various signal to noise ratios. The transmitter can provide unmodulated test signals or can be phase modulated by the ranging test unit or command modulator. Provision will also be made so that the transmitter can be modulated with the MDE command processor and ranging test unit used at the system test complex and launch complex. The unit will contain its own test equipment for making power output, frequency stability and frequency accuracy measurement. Adequate shielding will be provided to keep RFI and spurious signals from leaking into the subsystem under test. The test equipment configuration for the Test Transmitter/Receiver is shown in Figure 4.1-3.

2) RF Patch Panel -- The Patch panel permits patching between the Radio Subsystem and the Transmitter/Receiver for all antenna modes.

It also contains a circulator for permitting directivity and isoloation when connected to the S/S omni antenna port.

3) Command Modulator -- The Command Modulator consists of a command generator and a command data comparator. The command generator provides a PN code and command messages combined for single command channel operation. High reliability of format generation will be provided in order to assess a 1×10^{-5} bit error in the subsystem. The command data comparator provides a bit by bit comparison of the subsystem command detector output with command data generated within the command generator. A command data comparator output represents a bit error on the part of the subsystem command detector and will be counted on the counter located within the test transmitter/receiver. The unit will be adequately shielded to prevent RFI from leaking into the subsystem under test. This unit will be similar to the one developed for JPL on contract 950416. A block diagram of the command modulator is shown on the overall test set block diagram Figure 4.1-3.

4) Ranging Test Unit -- This unit generates periodic pulses for simple simulation of the ranging PN code and compares the phase of these pulses with those received from the S/S via the Transmitter/Receiver. The pulse rate is low so that phase ambiguity from multiple pulse distribution along the transmission path is avoided. The comparator consists of straight forward phase angle comparison, observable on a differential phase meter calibrated in degrees.

5) Command and Power Control Panel -- A panel which permits control and monitor of the DC power, into the subsystem and also simulates sending of CC & S commands. This panel can be operated manually or

programmed from the test sequencer. Monitor of critical power and control functions is provided for self check purposes.

6) Ripple and Transient Insertion Panel--A sine wave generator and pulse generator with coupling circuitry to allow ripple and transients to be impressed on input power, input signal and output signal lines.

7) Test Sequencer--A unit which permits sequencing of simulated CC & S commands and input power variations to carry out some of the more routine testing of the subsystem. This unit can also be programmed from an external source.

8) PCM Data Simulator--A PCM simulator which will generate a 7 bit PCM word at variable bit rates upon command. A portion of this simulator will be an input register by which PCM data can be entered from an external source. Monitor circuitry will be provided to check output signal format and levels. A visual indication of out of tolerance condition will be provided on the front panel as well as remotely for self check purposes.

9) Phase Modulator--A modulator which provides PSK modulation to two possible subcarriers. This unit will have the same performance characteristics as the multiplexer/encoder phase modulator.

4.1.3.4 Telecommunication Assembly-Handling and Shipping Equipment (AHSE)

The following equipment comprise the assembly-handling and shipping equipment required to support the effort.

1) Component Shipping Containers--There will be five shipping containers -- one (1) for each of the components comprising the Telemetry Subsystem, Relay Subsystem and Radio Subsystem. These units

will be reusable containers qualified for transportation environment and will be used to transport the Data Recorder, Telemetry Processor, Relay, Radio Exciter/Receiver and Power Amplifier components between Philco-WDL and Boeing-Seattle. Due to the weight, size and sensitivity of these components they will be contained as follows:

a) Data Recorder Container--The Data Recorder Component will be contained in polyurethane foam and enclosed in a "rectangular" container.

b) Telemetry Processor, Relay, Radio Exciter/Receiver and Power Amplifier Containers--The Telemetry Processor, Relay, Radio Exciter/Receiver and Power Amplifier components will be contained in polyurethane foam and enclosed in standard "drum" type containers.

2) Power Amplifier Package Cooling Equipment Assembly--This unit will be used to provide cooling to the Power Amplifier Package during test. The heat produced by the power amplifier during operation will be dissipated through heat transfer from the power amplifier to the cooling equipment at a rate sufficient to provide the power amplifier with a temperature environment consistent with optimum performance and life.

3) Component Mounting Interface Mock-up--This unit will be used to check the cable and configuration interface compatibility of the Telemetry, Relay and Radio Subsystems with the Spacecraft Structure.

4.1.4 Interface Definition

The Telecommunications test set will have an interface with the spacecraft which will allow the test set to radiate signals to the VHF and S-band antennas and receive radiated signals from the spacecraft S-band antennas. Coaxial cable communication links paralleling these same three paths shall be provided to accomplish testing where the radiation of RF energy is not desired.

The subsystem test sets when operating individually shall have the interfaces defined below.

4.1.4.1 Telemetry and Data Storage Subsystem Test Set Interfaces

The test set output interfaces are:

1) Simulated engineering analog data to the Engineering Multiplexer Encoder.
2) Simulated capsule data, 10 bps and 100 bps to the capsule storage unit via the Centaur hardline connection and the Relay Radio interface.
3) Simulated cruise science data, 100 bps, to the tape recorders.
4) Planetary science data, 50,000 bps, to the tape recorders.
5) Simulated clock signal to the Timer and the Mode Command Register.
6) Simulated CC & S command executions to the Mode Command Register, Block Coder and the redundant units.
7) 400-Cycle and DC power to the subsystem.

The test set input interfaces are:

1) Centaur telemetry output, 10 bps, from the isolation amplifier.

2) Modulated subcarrier output signals from the Mode Control unit.

4.1.4.2 Relay Radio Subsystem Test Set Interfaces

The test set output interfaces are:

1) PCM/PSK/FM VHF carrier in the 100 mc range to antenna subsystems.
2) DC Power 37 vdc ± 5 percent to the subsystem.
3) CC & S control lines to the attenuator disconnect, data demodutation rate switch and the receiver local oscillator switch.

The test set input interfaces are:

1) Data Pulse train and sync signals from the Detector and Bit Synchronizer.
2) Telemetry monitor points associated with establishing relay radio subsystem performance.

4.1.4.3 Radio Subsystem Test Set Interfaces

The test set output interfaces are:

1) Simulated command and ranging modulated S-Band carrier, to diplexer;
2) Simulated Telemetry modulated subcarriers to radio subsystem exciters;
3) Simulated spacecraft power to the radio subsystem;
4) Simulated CC & S Commands for redundant switching and antenna selection.

The test set input interfaces are:

1) Telemetry and ranging modulated S-Band carrier, which is derived from the subsystem response to a simulated input;

2) Detected Commands from the logic control element;

3) Telemetry monitor points associated with establishing radio subsystem performance.

4.1.5 Performance Parameters

The performance parameter of the individual subsystem test sets are:

4.1.5.1 Telemetry and Data Storage Subsystem Test Set

Subsystem supply power

1) Regulated 37 VDC at 5A.

2) 37 VDC with transient pulses of up to +10V amplitude imposed, 5 cps to 150 kc.

3) 37 VDC with AC ripple of up to 0.5V amplitude imposed, 5 cps to 150 kc.

Telemetry simulation signals

1) 0-5V dc, in 0.5 V steps.

2) 50 mvdc in 5 mv steps.

3) PCM train, 0 and 5 VDC, 10 bps.

4) PCM train, 0 and 5 VDC, 100 bps.

5) PCM train, 0 and 5 VDC, 50,000 bps.

Clock generator output

1) 50 kc square wave, 0-10 VDC

2) 100 cps square wave, 0-10 VDC

Simulated CC&S signals

1) Output level - OV and + 6V.

2) Duration - steady state or 501775 pulse.

4.1.5.2 Relay Radio Subsystem Test Set

Subsystem supply power -- same as those parameters listed in 4.1.5.1.

Simulated VHF signals

1) FM modulated 100 mc carrier frequency.

2) Output type - PCM NRZ.

3) Word length - 7 bits.

4) Output levels - "zero" - less than 0.5 volts

"one" - 5 volts ± 0.5 volts.

Simulated CC&S signals

1) Output level - OV and + 6 V.

2) Duration - steady state or 50 MS pulse.

4.1.5.3 Radio Subsystem Test Set

Subsystem supply power same as those parameters listed in 4.1.5.1.

Transmitter/receiver signal parameters

1) Test signal power level at 2115 ± 5 Mc -0 dbm to -170 dbm.

2) Phase modulation at S-band - 6.0 radians maximum.

3) Noise simulation at S-band - ±15 db.

4) Power measurement at 2295 ± 5 Mc - 50 watts to -40 dbm with ±1 db accuracy.

Data simulator signal parameters

1)	Output type	PCM NRZ
2)	Word length	7 bits
3)	Data rates	11 1/9 bps and 166 2/3 bps

4.1.6 Safety Considerations

The telecommunications system test set will be configured such that it is impossible to automatically send a command while testing that would be interpreted by the CC&S as a command to detonate any of the pyrotechnics. A manual over-ride will be provided where it is deemed necessary to test pyrotechnic circuitry, but such an over-ride will be enabled only by a mechanical device taken from the vehicle and whose absence from the vehicle means the circuit to be tested is disarmed. Over voltage protection shall be provided on all hard line connections to the flight equipment. All interconnecting cables will be keyed to preclude misconnections.

Any time during the Radio Subsystem tests or Telecommunications System test that a TWTA is operated, cooling must be provided to the space facing surface of the Telecommunications System. This will require an air flow across this surface of approximately 10 lb/min., 50% relative humidity and between 40° and 50°F.

4.1.7 Test

The Telecommunications Test Set will have a self test capability that will enable it to verify that portion of the telemetry information loop which is within the test equipment. This check will be accomplished,

regardless of whether or not the test set is connected to the Telemetry System, by switching Telemetry Test Set outputs to signal conversion equipment which will in turn feed back to the test set a predetermined response as either an S-band or CC & S signal. Verifying correct operation of the test set will require matching the achieved response with the known pattern which should result from a given Telemetry Test Set output.

Tests of the individual subsystem test sets will be accomplished as outlined below.

4.1.7.1 Telemetry and Data Storage Subsystem Test Set

The tape playback unit, tape recorder, biorthogonal encoder telemetry detector and decomutator will be checked by patching them in the configuration shown in Figure 4.1-4. A test tape of known format will be run on the tape playback unit. The oscilloscope will be used to monitor the output of each piece of equipment. A dual channel preamp unit will be used, one channel connected to the tape playback unit and the other at the various monitor points. The equipment outputs will be checked for waveshape, voltage level and formats.

4.1.7.2 Relay Radio Subsystem Test Set

The operational checks of the Relay Radio test set consists of a check of the phase modulator and of the VHF test transmitter. The phase modulalator will be checked by applying the input from the data simulator. The deviation will be measured during both data transmission rates by the wave analyzer. The test transmitter will be checked by feeding in

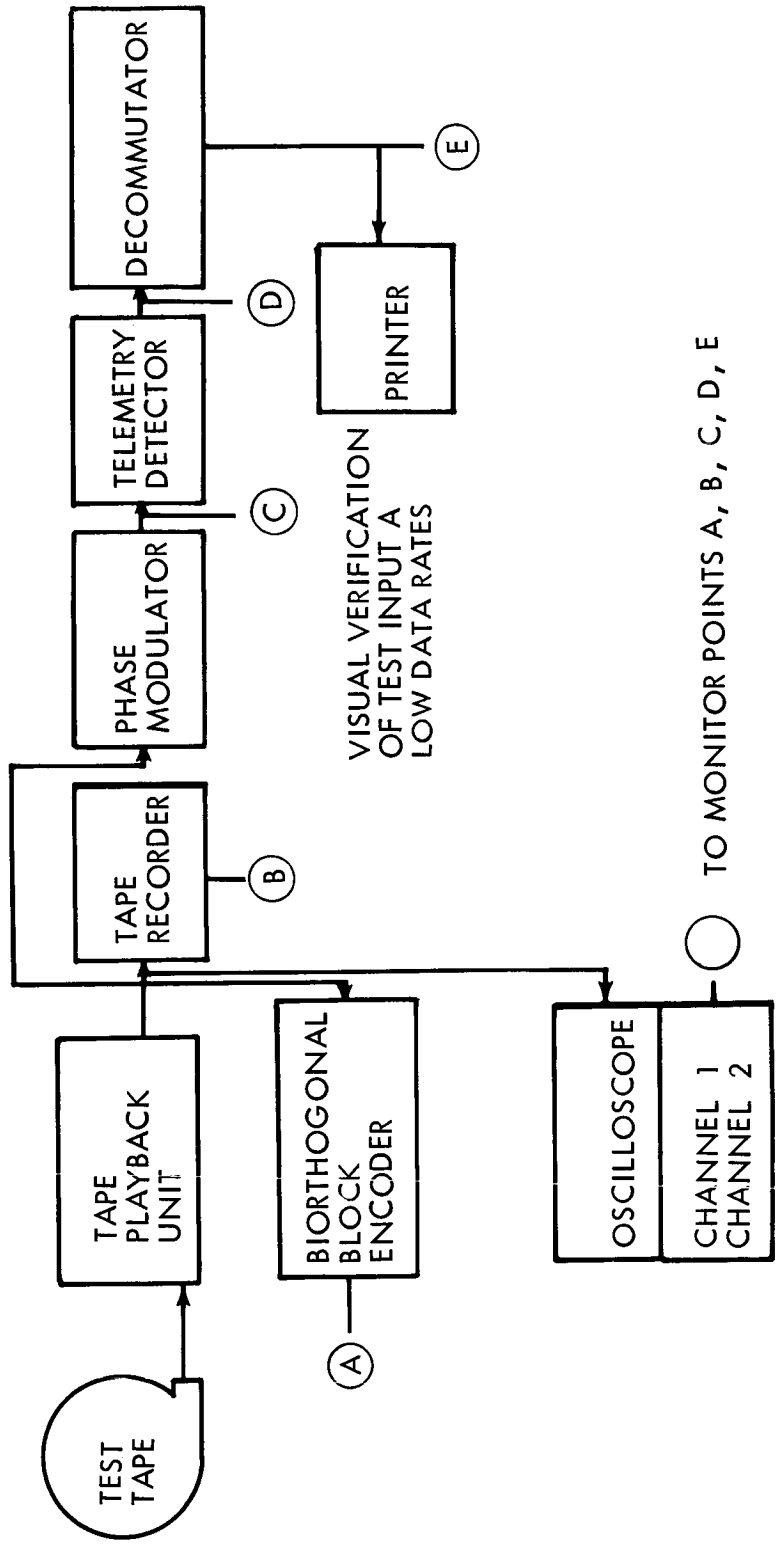

Figure 4.1-4: Telemetry and Data Storage Operational Check Equipment

the output of the phase modulator and measuring carrier deviation with the spectrum analyzer. Carrier frequency, local oscilator accuracy and short term stability as well as power output will also be monitored.

4.1.7.3 Radio Subsystem Test Set

The operational checks of the Radio Subsystem will consist of proper command modulator operation, ranging test unit operation and checkout of the test transmitter/receiver. The command modulator will be checked for the following:

1) PN Generator - verify proper code,
2) Command Data Generator - verify proper output wave form and voltage;
3) $4f_s$ Oscillator - verify frequency accuracy, short term stability and output wave shape;
4) Command Output - verify proper output waveform, voltage level, command format and spurious outputs.

The ranging test unit test will consist of a verification of proper ranging signal output wave shape and voltage level plus a calibration check of the delay compartor. This delay will be measured by inserting a calibrated delay line at the RF Patch Panel and observing the reading of the phase meter.

The test transmitter will be checked for the following:

1) Carrier frequency accuracy;
2) Carrier frequency short term stability;

3) Modulation deviation during command and ranging signal generation;

4) Spurious outputs during command and ranging signal generation;

5) Local oscillator frequency accuracy and short term stability.

4.2 ELECTRICAL POWER OSE

The OSE for the electrical power subsystem operational testing and checkout is described in this section.

4.2.1 Equipment Identification and Usage

The electrical power SSTE provides for testing of all electrical power modules, subassemblies, assemblies, batteries,and solar panels from completion of fabrication up to the point of readiness for installation in the spacecraft.

The electrical power SSTE logically breaks down into three subcomplexes:

1) Solar Panel OSE
2) Battery OSE
3) Module and Subsystem OSE

Each of these subcomplexes is described in detail in the following subsections.

Design of the electrical power subsystem test equipment includes consideration of the requirements for integration with the System Test Complex (STC) and the Launch Complex Equipment (LCE). Many electrical power subsystem test equipment items are used in the STC at all locations, as well as in the LCE.

Operation of the electrical power SSTE requires the availability of certain items of Assembly Handling and Shipping Equipment (AHSE) unique to the Electrical Power Subsystems. These items are identified and described within this section.

4.2.2 Requirements and Constraints

Design of the electrical power SSTE has been made compatible with overall Voyager OSE concepts by adherence to the applicable requirements set forth in Section 2.2 of this volume; OSE Design Parameters.

The unique features of electrical power SSTE are determined by the inherent nature of the spacecraft electrical power subsystem components.

4.2.3 Applicable Documentation

EOS-V-1042, Voyager Spacecraft Electrical Power Subsystem, OSE/Spacecraft Interface Table

4.2.4 SSTE Functional Description

The electrical power SSTE includes all of the equipment items required to test the complete electrical power subsystem as well as each of its major components down to the replaceable assembly or subassembly level. The SSTE provides external power, simulated spacecraft loads, means of control, monitoring, and data recording for testing the subsystem. It provides simulation of essential portions of the subsystem to enable realistic testing of replaceable level components.

Mechanized test sequences are used where applicable in combination with automatic recording to assure the acquisition of data for reliability evaluation and trend prediction. The major elements of the OSE are as follows:

1) Module and Subsystem OSE

The portion of SSTE required for test of all power conditioning modules and assemblies. These modules and assemblies are described in Section 4.2 of Document D2-82709-1.

2) Solar Panel OSE

The solar panel OSE provides the capability for illuminating panels and for monitoring and recording electrical performance of solar panel sections.

3) Battery OSE

The battery OSE provides the capability for monitoring and recording battery performance data during bench tests and Flight Acceptance Tests (FAT). It also incorporates battery charging capability.

Assembly, Handling, and Shipping Equipment (AHSE) required for use with the electrical power SSTE is listed and described later in this section (see 4.2.4.4).

Table 4.2-1 itemizes all basic modules used in building up the three groups of equipment and comprising the electrical power SSTE. The first three columns under the heading "Application" indicate their utilization within SSTE. The fourth and fifth columns indicate their usage in the STC and LCE, respectively.

The various tests to be performed on the electrical power subsystem using the SSTE or its equivalent within the STC and LCE are shown in Table 4.2-2 together with identification of the test complex to be employed. This tabulation is presented for cross reference only.

Table 4.2-1: ELECTRICAL POWER SSTE MODULES

Description	Application: Module and Subsystem Test Equipment	Solar Panel Test Equipment	Battery Test Equipment	System Test Complex	Launch Complex Equipment
Rack Cabinet - six-foot	X			X	X
Rack Cabinet - five-foot		X	X		
Rack Cabinet - four-foot	X			X	X
Module Test Panels	X				
Mode Control Panel	X				
Power Supply (battery simu.& ext. pwr)	X			X	X
Sync Simulator	X				
Solar Panel Simulators	X			X	
Control Panel	X			X	X
Analog Tolerance Detectors	X			X	X
Calibration Source	X			X	X
Power Subsystem Simulator	X			X	X
Transfer Assembly	X			X	X
Battery Charger			X	X	X
Digital Comparator	X			X	
Oscilloscope	X			X	
True rms Meter	X			X	
Integrating Digital Voltmeter	X	X	X	X	X
Data Access Panel	X			X	
Strip Chart Recorder	X			X	
Digital Clock	X			X	
Digital Printer	X			X	
Programmer	X			X	
Scanner Control	X			X	
Scanner - Crossbar	X			X	
Digital Limit Storage Module	X			X	
Tape Addresser	X	X		X	
Tape Punch	X	X		X	
Tape Punch Coupler	X	X		X	
Complex Intercom				X	X
Computer Digital Display				X	X
Remote Monitor Switch Assembly					X
X-Y Plotter		X			
Digital Thermometer		X			
Master Control Panel (solar panel OSE)		X			
Sun Tracker Control Panel		X			
Sun Tracker Electronics		X			
Sun Tracker Mount		X			
Scanner - 50-channel			X		
Control Panel (battery tester)			X		
Solar Panel Exciter		X			

Table 4.2-2: Power Subsystem Tests Location and OSE Required

DEFINITIONS: EOS - Electro-Optical Systems, Inc.
SAF - Spacecraft Assembly Facility at Kent, Washington
AFETR - Air Force Eastern Test Range
Table Mt. - Site for Solar Tests

	Test Location	Module & Subsystem Test Equipment	System Test Complex	Launch Complex Equipment	Solar Panel Test Equipment	Solar Panel Exciter	Battery OSE
SOLAR PANELS							
TA and FA Tests	EOS				X	X	
TA and FA Tests	Table Mt.				X		
Spacecraft Compatibility Test	SAF		X			X	
Post Shipment Test	AFETR				X	X	
Operational Checkout (with spacecraft)	AFETR		X				
BATTERY							
TA and FA Tests	EOS						X
Bench Tests	SAF						X
Bench Tests	AFETR						X
POWER CONDITIONING ELECTRONICS							
TA and FA Tests	EOS	X					
Compatibility Test	EOS	X				X	
Compatibility Test	Table Mt.	X					
Post Shipment Test	SAF	X					
Special Evaluation Tests as Required	SAF	X					
Spares Post Shipment Test	AFETR	X					
Special Evaluation Tests as Required	AFETR	X					
SPACECRAFT TESTING							
Initial Power Turn-On	SAF		X				
Subsystem and Special Tests	SAF		X				
Power Survey	SAF		X				
TM Calibration	SAF		X				
System Tests	SAF		X				
RF Coupler Test	SAF		X				
Dummy Run	SAF			X			
Vibration Test	SAF		X	X			
Mission Test	SAF		X				
Spares Qualification	SAF		X				
Space Flight Operations Facilities Test	SAF		X				
Preshipment System Test	SAF		X				
Subsystem Tests	AFETR		X			X	
System Tests	AFETR		X				
Operational Checkout	AFETR		X				
Dummy Run and Joint Flight Acceptance	AFETR			X			
RFI Test	AFETR			X			
Final System Test	AFETR		X	X			
Final Operational Checkout	AFETR		X				
Final Pre-countdown Checkout	AFETR			X		X	
Simulated Launch	AFETR			X			
Launch	AFETR			X			

In addition to the requirements and constraints referenced in subsection 4.2.1 above, the following performance requirements have determined the electrical power SSTE design concept:

Accuracy--Of prime importance is the accuracy of the measurements performed by the OSE. The large common mode noise levels encountered while operating on the STC, LCE, and to a lesser extent, on the module and subsystem test equipment must not degrade the accuracy of the data acquisition system monitoring equipment. Data scanning rates up to five per second for DC and one per three seconds for true RMS AC measurements will produce accuracies of not less than 0.1 percent for DC and one percent for AC. Data output will be available as: 1) binary coded decimal for input to a computer; 2) digital printout on paper tape; 3) punched paper tape with an IBM eight-level code format. Accuracy of temperature measurements shall be better than one percent. Accuracy of panel meters shall be better than one percent full scale.

Test Repeatability--Next to accuracy, test repeatability is of the highest importance. Precise test repeatability must be accomplished so as not to distort or mask trend data, module or subsystem confidence, and reliability verification.

Measurements and operating parameters must be repeatable from test to test and between any combination of Module and Subsystem Test Equipment, System Test Complex, and launch complex equipment. To achieve this goal, the power subsystem OSE will provide identical power and control, and data acquisition systems for use in the module and subsystem test equipment and System Test Complex OSE.

The uniformity of these OSE will also reduce design costs, provide a proven basic OSE design early in the Voyager program, require less spare assemblies, and ease operator training through familiarity.

Reliability--The importance of OSE reliability must be recognized as a prime design goal. The use of proven circuits, derating of components, and conservative solid state designs will be guidelines for OSE design. Commercial equipment, incorporated within the SSTE must be of the highest quality, field proven, and from manufacturers with a history of providing reliable equipment.

The SSTE will be mechanically designed to withstand normal transportation vibration and shock environments. Rack slides will allow convenience, service, and calibration access.

Data Retention--Long life trend predictions and reliability evaluation will require retention of all test data on modules and subsystems. The SSTE will produce printed digital readout on paper tape for real time evaluation and short term data review. Data, for long term retention and for computer analysis will be recorded on punched paper tape using an IBM eight-level code.

Safety--The OSE/Power subsystem interface will not be a hazard to the power subsystem. All OSE connectors interfacing with the power subsystem or spacecraft will be HI-REL and chosen to prevent mismatch.

The OSE external power, battery simulator, and solar panel simulator supplies incorporate over voltage protection and adjustable current limiting circuitry.

Power subsystem monitor lines include isolation networks where similar circuitry does not exist in the flight hardware.

The OSE controls, their functions, and their titles are human engineered. The OSE includes a rigorous self-test capability. This includes a means to check the operation of controls, performance of all external supplies, accuracy of all data monitoring equipment, and tolerance detectors.

Tolerance Detectors--The OSE design for the module and subsystem test equipment, System Test Complex and Launch Complex Equipment includes independent and programmable analog and digital tolerance detectors.

Analog tolerance detectors provide full time monitoring of the power subsystem on a limited number of monitoring lines. An out-of-tolerance condition will be indicated by an audio alarm and a panel indicator designating the circuit involved. An out-of-tolerance condition produces a command signal to the data acquisition system to start a complete scan of all monitor lines.

Digital tolerance detectors provide extremely precise programmable tolerance limits. An out-of-tolerance condition flags the recorded data and also activates the audio alarm and a panel indicator.

Computer Control--The electrical power SSTE is adaptable to local or remote computer control when utilized as part of the STC or LCE.

4.2.4.1 Module and Subsystem Test OSE Detail Functional Description. The module and subsystem test OSE is contained in three consoles: the test adapter rack, the power and control console, and the data acquisition system. Punch tape recording capability is provided by a portable unit when computer data processing is required. A typical arrangement of the Module and Subsystem Test OSE assembly layout is shown in Figure 4.2-1.

Test Adapter Rack--The test adapter rack provides:

1) A means to electrically connect the power subsystem either as individual modules or at the assembly level, to the power and control and data acquisition system consoles.
2) A mechanical support for individual modules during testing.
3) Input and output voltage and current monitors for individual module testing.
4) Control of electrical loads.
5) Operating mode commands.
6) A substitute for the central computer and sequencer synchronizing signal.
7) Simulated battery power.
8) Forced air for cooling power subsystem during operating periods.

The module test panels are designed such that they may be used in the OSE test adapter rack or as a separate bench test fixture when used with

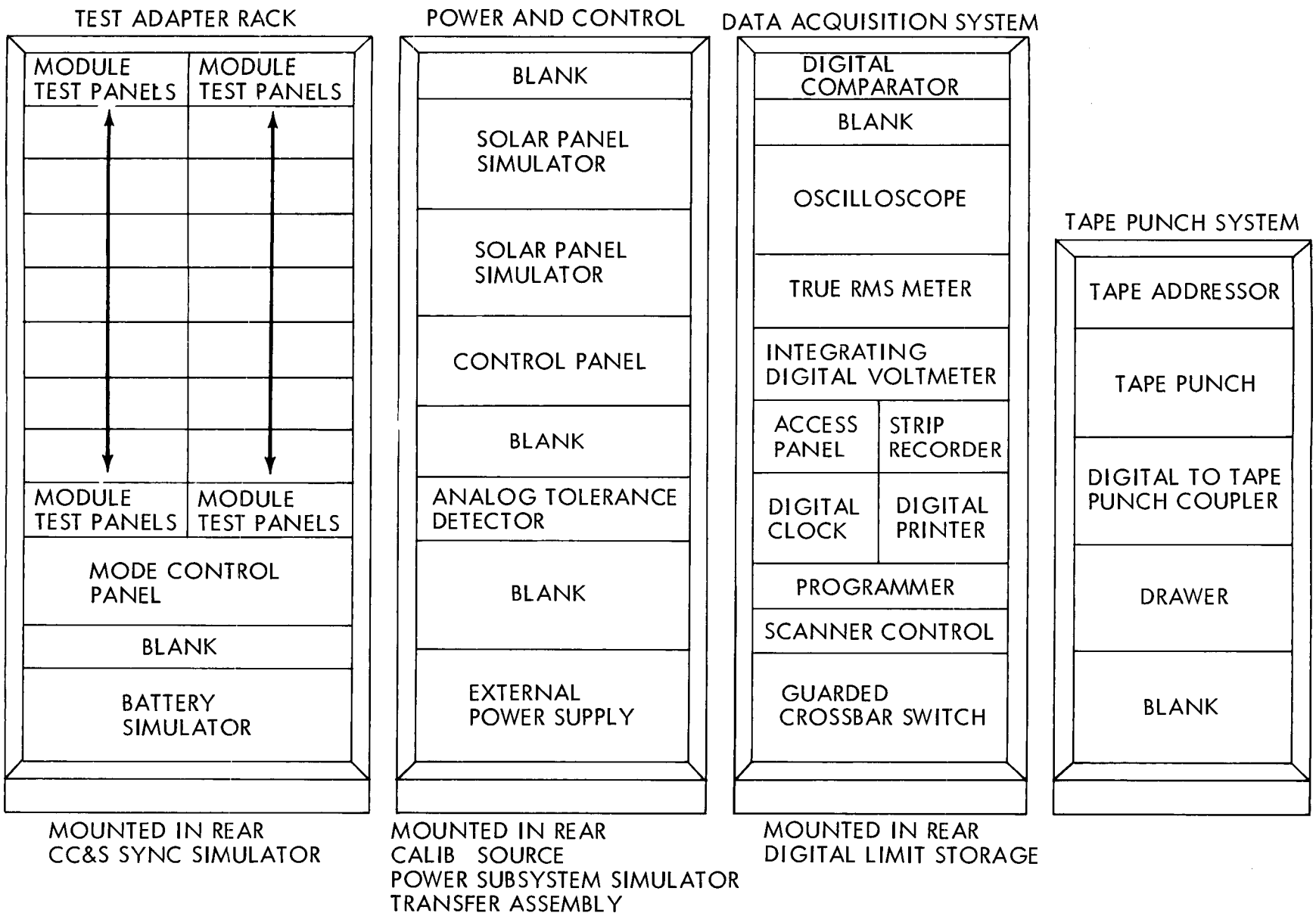

Figure 4.2-1: Module and Subsystem Test OSE

external power sources and monitoring equipment. A typical module test panel circuit is shown in Figure 4.2-2. The test panel circuitry provides for all power, control, and monitor circuits to be available (in parallel) at both the front panel (for bench testing) and at a rear connector for assembly into the adapter rack. All high level current monitoring is accomplished through the use of precision meter shunts permanently installed in each panel.

The mode control panel includes circuitry to command the power subsystem through various failure modes and simulate central computer and sequencer switching functions. Switching is also included to change the adapter rack from a module test configuration to assembly level testing.

Power and Control Console--The power and control console provides:

1) External power and simulated solar panel power.
2) Power subsystem control.
3) OSE control.
4) Analog tolerance detectors and alarm.
5) Panel meters for monitoring battery terminal and cell voltages, simulated solar panel voltage and current, external power voltage and current, d.c. regulator voltage and current, and running time for the spacecraft and OSE.
6) Self-tests capabilities for power sources, controls and monitors.

A block diagram of the power and control console is shown in Figure 4.2-3.

The control panel contains all power switching controls, analog tolerance detector indicators, a tolerance detector alarm circuit, self-test-operate

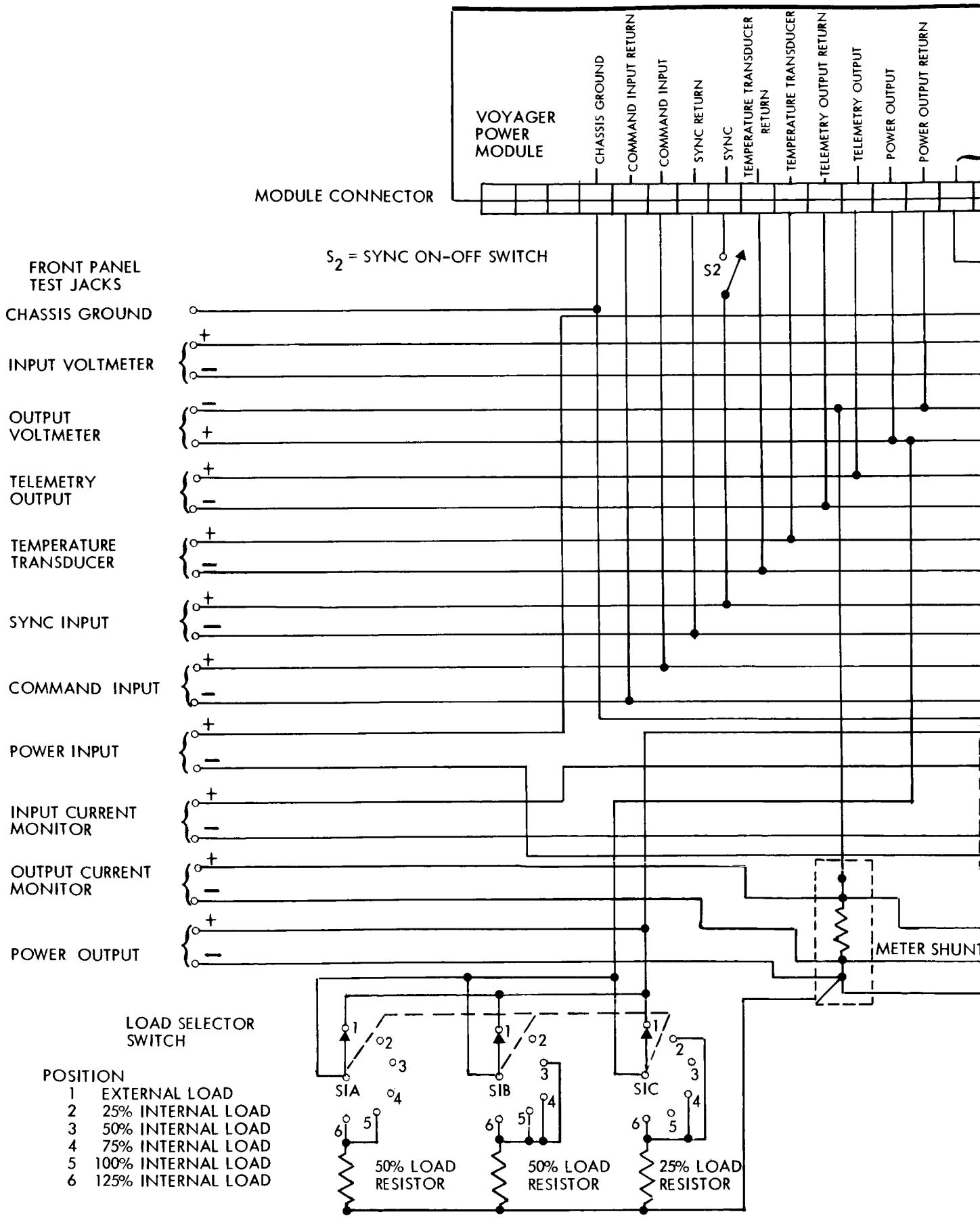
VOYAGER POWER MODULE
CHASSIS GROUND
COMMAND INPUT RETURN
COMMAND INPUT
SYNC RETURN
SYNC
TEMPERATURE TRANSDUCER RETURN
TEMPERATURE TRANSDUCER
TELEMETRY OUTPUT RETURN
TELEMETRY OUTPUT
POWER OUTPUT
POWER OUTPUT RETURN
MODULE CONNECTOR
S_2 = SYNC ON-OFF SWITCH
S2
FRONT PANEL TEST JACKS
CHASSIS GROUND
INPUT VOLTMETER
OUTPUT VOLTMETER
TELEMETRY OUTPUT
TEMPERATURE TRANSDUCER
SYNC INPUT
COMMAND INPUT
POWER INPUT
INPUT CURRENT MONITOR
OUTPUT CURRENT MONITOR
POWER OUTPUT
METER SHUNT
LOAD SELECTOR SWITCH
SIA
SIB
SIC
50% LOAD RESISTOR
50% LOAD RESISTOR
25% LOAD RESISTOR
POSITION
1 EXTERNAL LOAD
2 25% INTERNAL LOAD
3 50% INTERNAL LOAD
4 75% INTERNAL LOAD
5 100% INTERNAL LOAD
6 125% INTERNAL LOAD

47 (7)

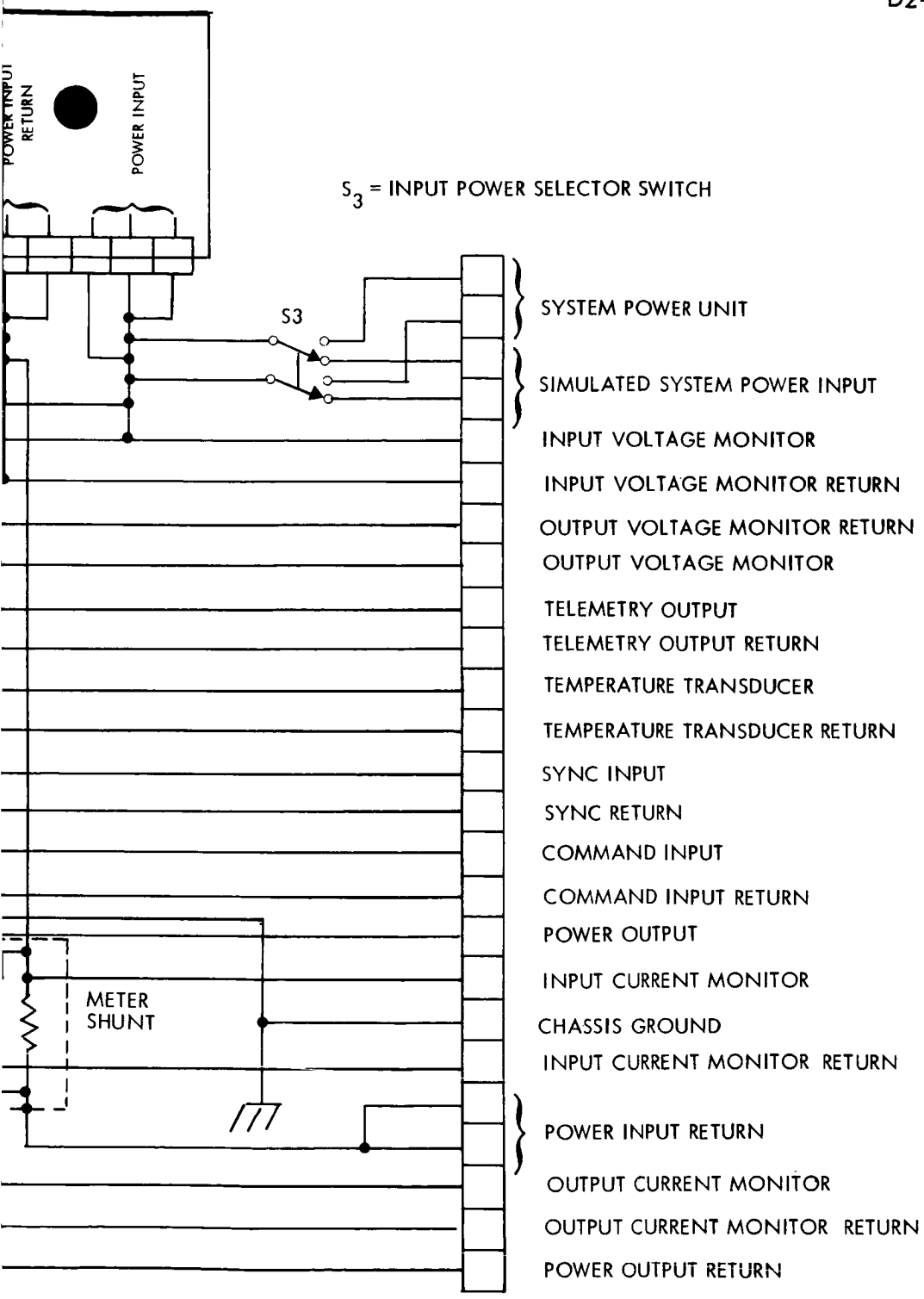

Figure 4.2-2: Typical Module Test Panel

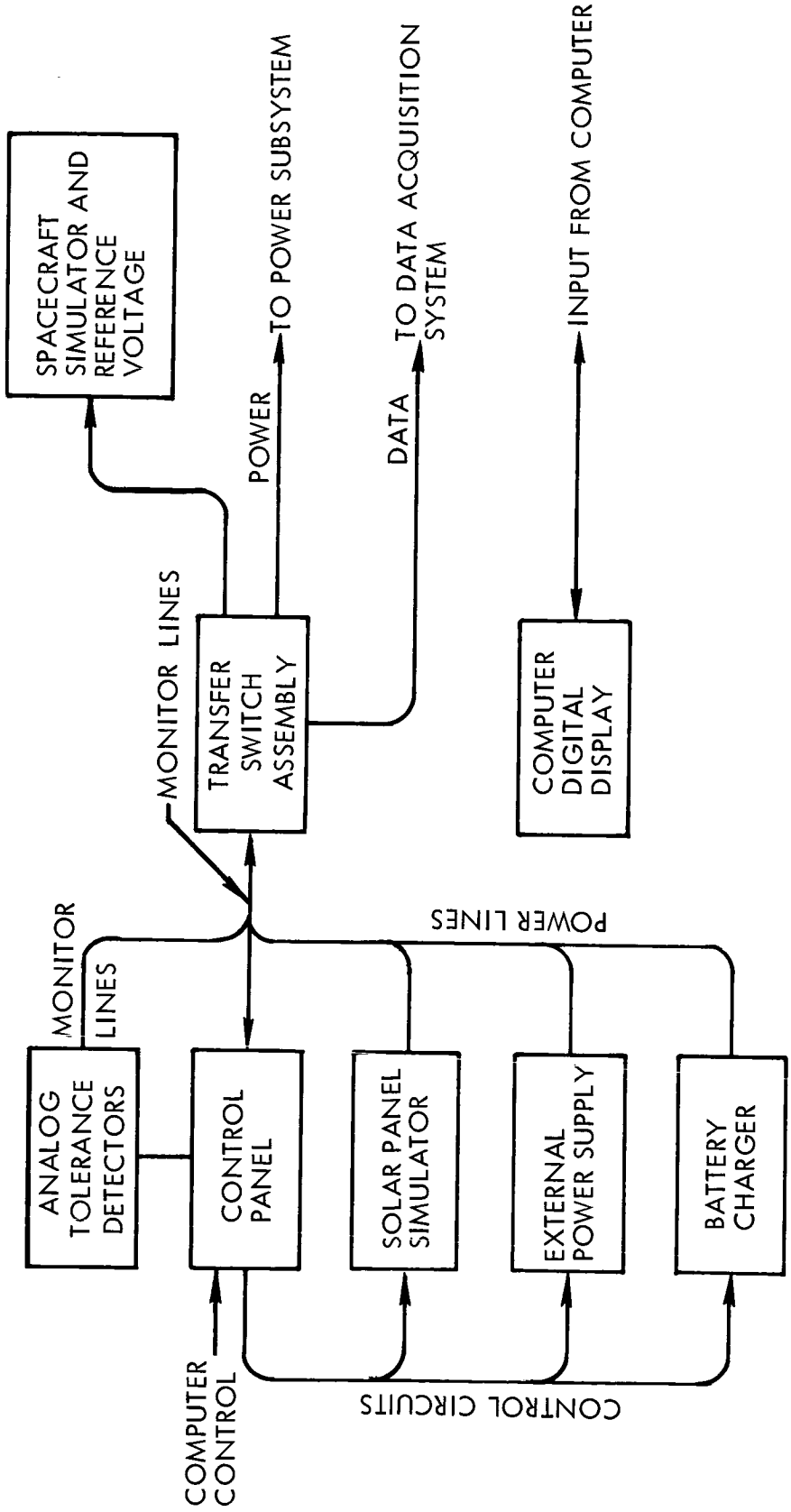

Figure 4.2-3: Power and Control Console

controls, and meters for monitoring regulator input voltage and current, battery cell and terminal voltages, and a spacecraft running time meter. A solar panel simulator provides spacecraft power with characteristics closely matching solar panels in space. The simulator is programmable through a range equivalent to that encountered during an Earth-Mars flight.

The external power supply provides regulated ground power or simulated battery power to the power subsystem. External sensing, current limiting, and voltage limiting are incorporated into the design.

The analog tolerance detector panel incorporates a number of adjustable tolerance detectors which sense when a spacecraft monitor line has deviated above or below a pre-established limit. A visual go,no-go signal is produced and remotely displayed on the control panel. In addition to the visual signal, an audio alarm in the control panel is activated by the tolerance detector during an out-of-limit condition.

The transfer assembly contains all switching circuitry necessary for transferring the OSE to either the power subsystem or reference voltages and power subsystem simulator. Operation of the transfer switch is accomplished remotely from the control panel.

The reference voltages and power subsystem simulator panel contains all of the necessary loads, relays, and voltage sources to simulate a complete power subsystem. The voltage sources are obtained from built-in regulated supplies. With the use of the transfer assembly, and the reference voltages,

and power subsystem simulator, the OSE operator can test the performance of the power and control rack and the data acquisition system. The circuitry allows for testing all monitor functions without disturbing the normal operation of the power subsystem.

Data Acquisition System Console--The data acquisition system provides:

1) Automatic data acquisition.
2) Voltage, current, frequency, wave shape and temperature monitoring.
3) Digital recording on printed paper tape.
4) Digital recording on punched paper tape.
5) Analog strip recording.
6) HI/GO/LO readout from a digital comparator.

A block diagram of the data acquisition system is shown in Figure 4.2-4.

The heart of the data acquisition system is an integrating digital voltmeter which virtually eliminates the measurement errors caused by extraneous noise on the signal, without restriction on grounding of the signal source, recorder, or programming device. The instrument input is floating and guarded, and is average reading, thus achieving extremely effective common mode noise rejection. Data output from the voltmeter is a binary coded decimal (BCD).

The input scanner for the data acquisition system incorporates a guarded crossbar switch which maintains a high rejection of common mode noise. The scanner accommodates up to 200 three-wire inputs. This crossbar switch, through optimum path length design and the use of solid gold twin

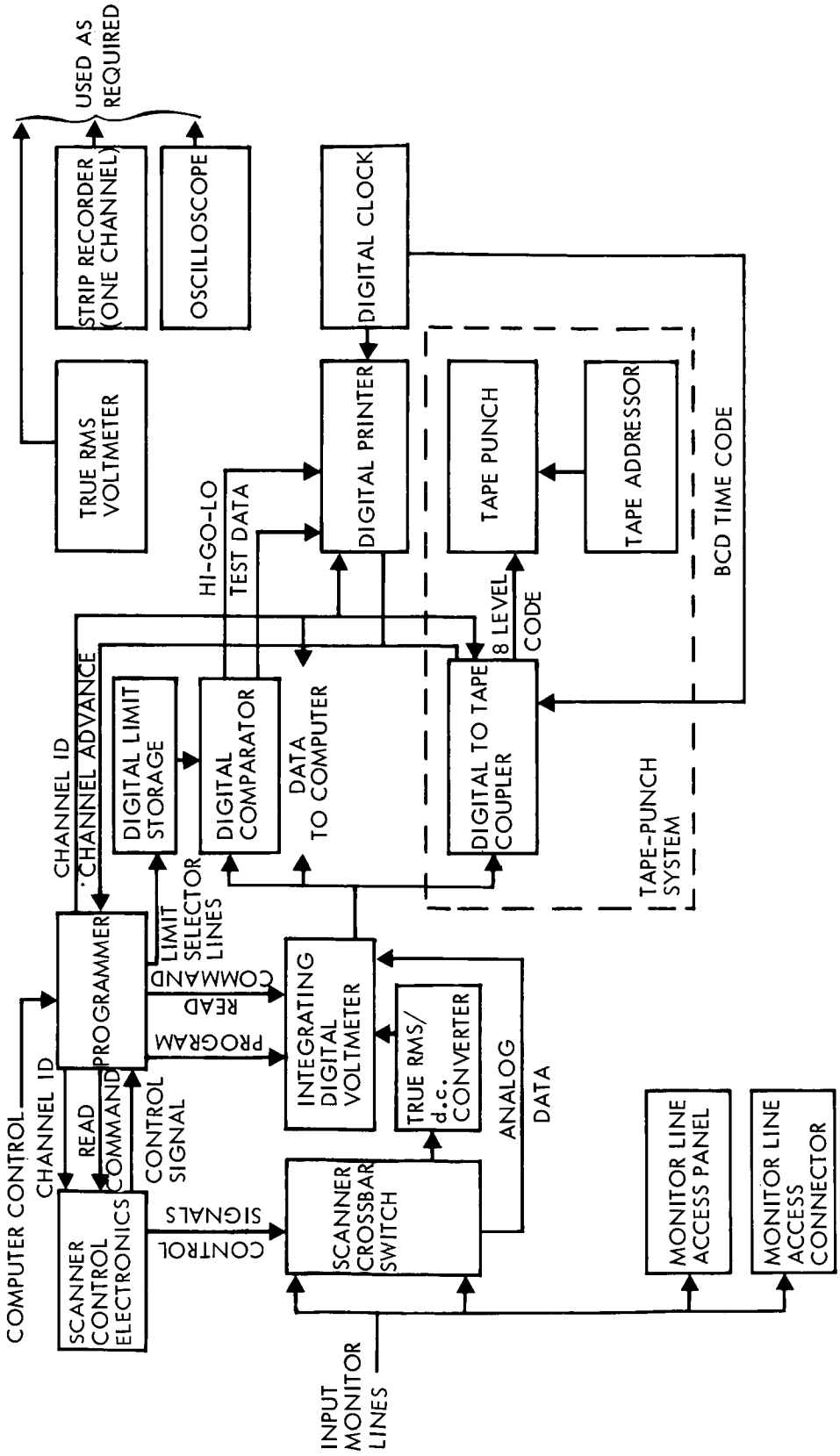

Figure 4.2-4: Data Acquisition System

contacts, achieves a very low signal path resistance and low thermoelectric potential, thus insuring accurate transference of low-level signals. The scanner control and crossbar switch assemblies are housed in separate cases.

The Data Acquisition System is controlled by a programmer which selects the input lines to be monitored, mode of measurement, voltmeter range, initiates read and print commands, and establishes the tolerance levels for the digital comparators.

A digital strip printer records the binary coded decimal data output from the integrating digital voltmeter together with time of day from a digital clock, and HI/GO/LO indication from the digital comparator.

A digital comparator accepts the BCD data from the integrating digital voltmeter and the high and low BCD tolerance limits from the digital limits storage module. A comparison is made in less than three milliseconds. The digital limit storage module stores pre-established limits for each measurement and, upon command from the programmer, forwards the BCD limits for a corresponding measurement to the digital comparator.

A true rms-to-dc converter with one percent accuracy conditions a.c. measurements at the output of the scanner.

A rack mounted true rms voltmeter with one-quarter percent accuracy augments the digital a.c. measurements.

A wideband oscilloscope with a differential input amplifier provides the capability of monitoring all data lines for wave shape, level, ripple, and noise.

A general purpose six-inch strip chart recorder permits analog recording of any single data line. The recorder incorporates an all solid-state servo system and input amplifier circuit.

All power subsystem monitor lines are available at both the front and rear of the OSE for measurement and recording convenience. The monitor line access panel is located on the front panel of the Data Acquisition System. The monitor line access connector is located at the rear of the Data Acquisition System for use with recording oscillographs, commutators, etc.

A high speed, punched paper tape recording system stores data in an IBM eight-level code for later computer processing. The system includes a coupler for converting the parallel BCD code, from the integrating digital voltmeter, into a serial eight-level standard IBM code. A tape addresser allows the operator to dial in a preamble onto the paper tape. This preamble would normally include:

1) Day, Month, Year
2) Module or assembly type code
3) Module or assembly serial number
4) Test procedure number
5) Test engineer's code number
6) Data Acquisition System serial number

The addresser automatically inserts the necessary spaces, line feeds and carriage return signals.

4.2.4.2 Solar Panel OSE Detail Functional Description

The Solar Panel OSE consists of the following equipment:

1) Solar panel test console
2) Sun tracker
3) Solar panel exciter
4) Water Bath
5) Standard and secondary standard solar cells
6) Solar panel deployment monitor
7) AHSE-assembly, handling, and shipping equipment
   (AHSE will be covered in Subsection 4.2.4.4)

Solar Panel Test Console--The Solar Panel Test Console provides the following capabilities:

1) Solar panel voltage and current measurements
2) Solar panel temperature measurements
3) Solar panel load
4) Standard cell short circuit current and temperature measurements
5) Digital data recording on printed paper tape
6) Digital data recording on punched paper tape
7) Control of sun tracker

The Solar panel test console assembly layout is shown in Figure 4.2-5. The master control panel provides switching circuitry for controlling:

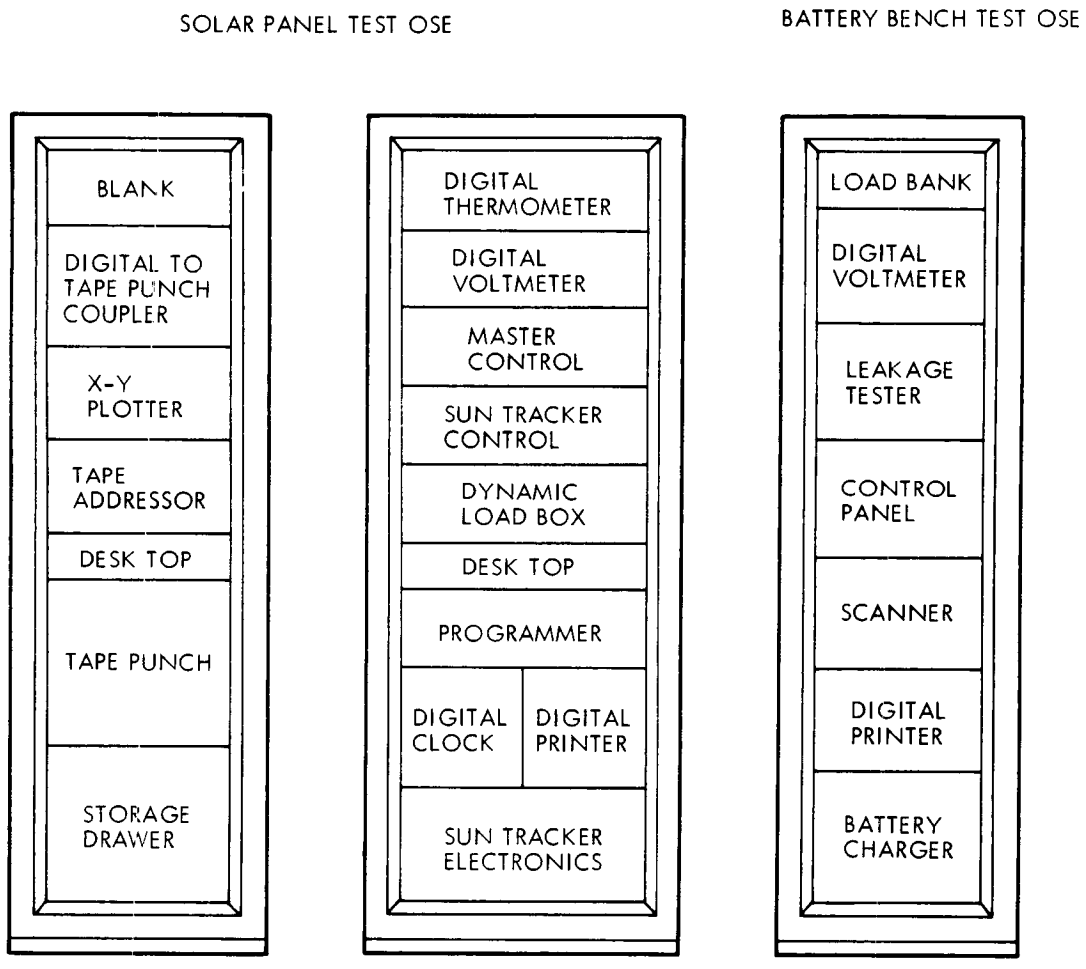

Figure 4.2-5: Solar Panel and Battery Operational Support Equipment

1) AC power: ON-OFF

2) Solar panel section selector

3) X-Y plotter: Record - Standby

4) Digital printer: Record - Standby

5) Tape punch: Record - Standby

6) Programmer functions: Automatic-Manual, Start, Reset, Manual Step

The Sun tracker control panel provides manual or automatic control of the Sun tracker mount. Controls include:

1) AC Power: ON-OFF

2) Elevation: Automatic-OFF-Manual

3) Azimuth: Automatic-OFF-Manual

4) Manual Elevation: CW-OFF-CCW

5) Manual Azimuth: Up-OFF-Down

A transistorized dynamic load provides a dummy load for solar panel testing. Controls include:

1) Load: ON-OFF

2) Mode: Local Control - Programmer Control

3) Terminal Voltage: Variable: 0-120 volts
Manual Step (3 volts each)
Reset

A digital thermometer provides direct readout of solar panel temperature at six points in degrees centigrade to four significant figures. Both visual and BCD outputs are produced. The instrument is transistorized and utilizes a chopper comparator servo balancing system. Temperature

sensing is achieved with precision, interchangeable thermister probes attached to the solar panel at locations defined in the test procedure.

An X-Y plotter provides an efficient means to portray solar panel voltage and current by producing a graph in Cartesian coordinates. The X-Y recorder incorporates two transistorized servo systems to produce a pair of crossed motions, moving a pen so as to write a precise X-Y plot.

The integrating digital voltmeter provides extremely accurate voltage and current measurements. Current measurements are accomplished through the use of precision meter shunts. This instrument is fully described in Subsection 4.2.4.1.

A digital strip recorder records the BCD outputs from the digital thermometer and voltmeter together with time of day from a digital clock.

A tape punch provides data retention for later computer analysis. The tape punch is identical to that used in the Module and Subsystem OSE.

Sun Tracker--The Sun tracker provides a mount which automatically maintains a solar panel section and a standard cell so that their surfaces are normal to the Sun vector. The mount is locked to the Sun movement by a servo system controlling elevation and azimuth motors. The tracker will be used for outdoor functional tests and high altitude calibration.

Solar Panel Exciter--The solar panel exciter provides simulated sunlight for conducting solar panel tests indoors. The exciter consists of four basic assemblies.

1) Power console

2) Calibration console

3) Lamp test stand

4) X-Y calibration scanner

The power console houses the line voltage regulators and the individual lamp color temperature adjustment controls.

Line voltage regulators are required because the variation in line voltage adversely affects the color temperature stability which, in turn, would cause a variation in the output of the solar panel.

The calibration console houses the controls and circuitry required to calibrate the solar panel exciter. Included are the color temperature bridge circuit and controls for the X-Y calibration scanner.

The lamp test stand provides the frame and supports for the flood lamp array. This unit is light in weight so that maximum mobility can be maintained. The lamp stand design allows easy adjustment of the light bank to any desired angle or level in a matter of seconds. The position can be fixed by means of a foot locking lever. The light-bank is counter-weighted through a parallelogram mechanism which assures that the light angle alignment adjustment is made with a minimum of effort. The light test stand is mounted on locking type casters.

A solar panel exciter unit assembled for use on the Ranger vehicle is shown in operation during spacecraft checkout of AFETR in Figure 4.2-6.

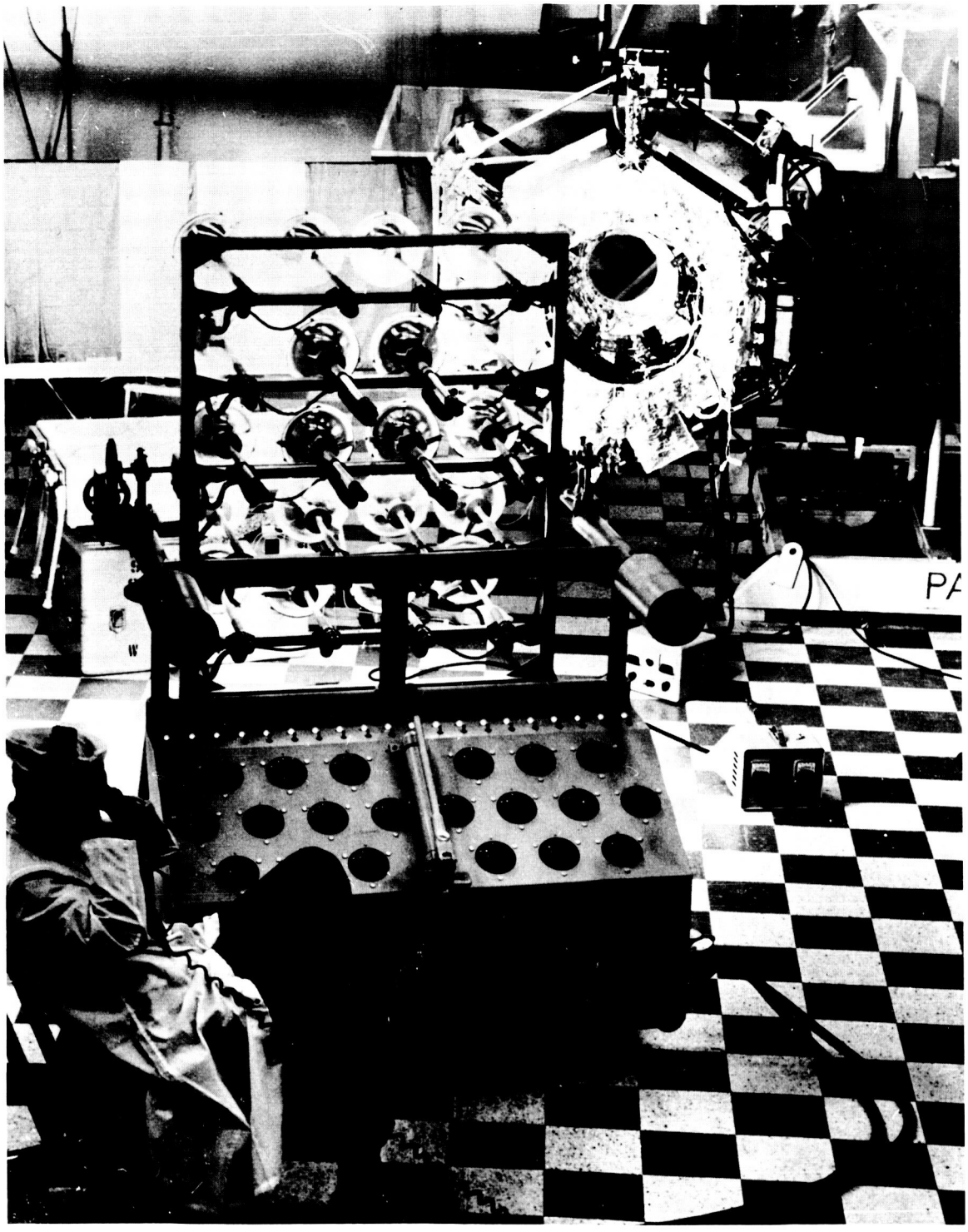

Figure 4.2-6: Solar Panel Exciter

The X-Y calibration scanner provides a method for mounting a standard cell and the color measuring sensor in front of the exciter and automatically scanning the complete area being illuminated by the lamp test stand to determine illumination intensity and uniformity. Remote control of the scanner is accomplished from the calibration console. Each transducer has thermistors mounted in its housing so that temperatures of the cell can be known at all times during the calibration procedure. Both the color temperature sensor and the standard cell are water cooled by means of flexible tubing connected to a constant temperature water bath.

Water Bath--A constant temperature water bath provides the necessary temperature stability required for the standard cell and color temperature sensor. A pump circulates the coolant, through flexible tubing, to the sensor mounting.

Standard and Secondary Standard Cells--The standard cell will be a solar cell whose short-circuit current has been measured at altitudes in excess of 77,000 feet which shall be considered to have been measured at air-mass-zero conditions.

The calibration of secondary standards will be accomplished in the following manner: A primary standard cell whose spectral response, covering, and coating are close to that of the cells used in the Voyager solar panels will be obtained. The primary standard cell and a number of randomly selected solar cells typical of those used for the Voyager solar panel, and filtered in a manner typical of that array,will be placed in adjacent positions and calibrated utilizing approved techniques.

Cell Ratio--The short-circuit current of these cells shall be read simultaneously at 5-minute intervals during a test period extending from 3 hours before solar noon to 3 hours after solar noon. A plot shall be made of the ratio of the uncollimated short-circuit current of each cell to the standard cell.

$$\text{Cell Ratio} = \frac{I_{sc} \text{ uncollimated - secondary cell}}{I_{sc} \text{ uncollimated - primary balloon cell}}$$

Those cells whose ratios do not deviate more than 1 percent during the 6-hour test period will be considered acceptable as secondary standard cells.

Average Cell Ratio--The average cell ratio for each cell will be calculated from the readings taken during the 6-hour test period as follows:

$$\text{Average cell ratio} = \frac{\text{sum of measured cell ratios}}{\text{number of ratio measurements}}$$

Short-Circuit Current at Air-Mass Zero--The air-mass-zero short-circuit current of the secondary cell is determined by the product of the average cell ratio and the air-mass-zero short-circuit current of the primary standard cell.

Solar Panel Deployment Monitor--The solar panel deployment monitor provides a means of measuring hinge angle and motor current, as related to time, and supplies external motor power.

4.2.4.3 Battery OSE Detail Functional Description

The battery OSE consists of the following equipment.

1) Battery bench test OSE;

2) Portable battery tester;

3) AHSE assembly, handling, and shipping equipment (AHSE is summarized in Paragraph 4.2.4.4).

Battery Bench Test OSE--The battery bench test OSE provides the following capabilities:

1) Terminal voltage measurement

2) Cell voltage measurements

3) Temperature sensor measurement

4) Continuity and leakage current measurements

5) Battery charging

6) Constant current loads

7) Electrical capacity test

8) Digital print out of voltage and current measurements

The battery bench test OSE layout is shown in Figure 4.2-5.

A control panel provides switching circuitry for:

1) Rack Power: ON-OFF

2) Print Command

3) Mode: Charge--OFF--Discharge

4) Load Selector

5) Continuity test selector.

A scanner provides for monitoring the terminal voltage and all cell voltages sequentially. Provisions for either manual or automatic scanning are incorporated.

A digital voltmeter provides accurate voltage and current measurements. Precision meter shunts are utilized for current readings. The digital voltmeter BCD output is recorded on a digital printer. The printer is identical with that described in the module and subsystem test equipment.

The battery charger assembly will provide a capability for charging all three spacecraft batteries simultaneously. The charger circuitry will include remote voltage sensing, automatic "stop charge" at predetermined voltage, current limiting, running time meter, provisions for remote operation, voltage, and current meters.

A leakage tester is incorporated for measuring electrical leakage and breakdown within the battery and its connectors.

The load bank incorporates a solid state constant current load. The load is adjustable in steps between 2 and 15 amps.

Portable Battery Tester--The portable battery tester is a small hand-held monitor, used primarily for checking batteries mounted on the spacecraft and not connected to the system test complex OSE. The instrument measures terminal voltage, cell voltages, and temperature transducer resistance.

4.2.4.4 Electrical Power AHSE

Assembly, handling, and shipping equipment for supporting the power subsystem is itemized and described below.

Battery AHSE--This includes the items below.

1) Handling Fixture--Offers protection to the battery during bench testing and supports the battery in the shipping container.
2) Shipping Container--Provides protection to the battery during shipping and temporary storage.
3) Cotton Cover--Protects battery's polished surfaces during all handling operations.
4) Plastic Bag--Polyethylene bag. Used to seal out moisture during cold storage.
5) Cold Storage Box--A refrigerated storage container held at 30°F used for long-term storage of batteries.
6) Safety Equipment--Protective clothing, face mask, and eye wash facilities are required to protect battery handling personnel from possible contact with the potassium hydroxide electrolyte.
7) Foam Pad--Polyurethane foam pads are placed under used test batteries when not mounted in handling fixture or environmental test fixtures.

Solar Panel AHSE--This includes the items below.

1) Handling Frame--Solar panel support fixtures are used at all times except during weighing, center-of-gravity tests, vibration test, or when mounted on spacecraft.
2) Solar Panel Dolly--Attaches to handling frame and used to transport solar panels from one area to another.

3) Dust Cover--Light plastic bag to protect panels from contamination.

4) Heat-Seal Bag--A plastic bag which is sealed by application of heat to seams. It is used to protect the panel from contamination while being shipped long distances and during periods of extended storage.

5) Shipping Trailer or Cases--Used for transporting and storage of solar panels. Structurally strong and hermetically sealed. Special shock mounts are designed to prevent excessive shock and vibration loads during transportation.

6) Deployment Aid--Mechanical supports used during solar panel deployment tests.

Power Conditioning Electronic AHSE--This includes the items below.

1) Plastic Storage Container--Sealed lid boxes and internal supports used to protect electronic modules during storage and transportation between areas.

2) Shipping Container--Metal or fiberglass case used to transport electronic modules between facilities and for storage.

4.2.5 Interface Definition

The intricate interface between the electrical power subsystem and its OSE can be categorized by:

1) Monitor points;

2) Input power, output loads, and control signals;

3) OSE interface connectors.

Tables for each of these interface areas are summarized in a separate reference (see Section 4.2.3). Each table includes the interface required for the Module and Subsystem Test Equipment (MSSTE), STC, and LCE.

4.2.6 Performance Parameters

4.2.6.1 Controls

The OSE provides the following switching functions to control the power subsystem operation.

1) External Spacecraft Power: ON-OFF
2) Power Changeover: Internal/External
3) Solar Panel Simulators: ON-OFF
4) Battery Simulator: ON-OFF
5) Various ON-OFF and SET-RESET commands are hardlined into the power subsystem during portions of the spacecraft testing program, and during subsystem tests.
6) The Module and Subsystem Test OSE Adapter Rack provides for switching module input and output circuits to a system configuration or simulated system power source and dummy loads.

4.2.6.2 Power Sources

The following power sources are incorporated within the OSE:

Solar Panel Simulator--A solid state Solar Panel Simulator with output characteristics duplicating that of Voyager solar panels. The output characteristics are adjustable to simulate all conditions encountered during the Voyager Earth-to-Mars mission. Operating mode is adjustable with front panel controls and by remote computer programming. The simulator will supply up to 1800 watts output. Input power: 120/208 V a.c., 400 cps, 3 phase.

External Power Supply--External power is provided by a solid state, high efficiency dc power supply incorporating both constant voltage, constant current (automatic transfer from constant voltage to constant current), and remote sensing. Voltage and current levels are adjustable with front panel controls and from remote computer programming.

Output Voltage:	0-100 vdc
Output Current:	0-30 amps
Input Power:	120/208 vac, 400 cps, 3 phase
Regulation:	0.05 percent maximum. No load to full load.
Ripple:	0.02 percent maximum
Output Impedance:	0.001 ohm at dc, 2 ohm at 100 kc maximum

Battery Simulator--Simulated Battery Power for subsystem tests is provided by a power supply identical to the external power source above.

Battery Charger--The battery charger circuit provides adjustable charging current and "Stop Charge" voltage sensing.

Output Voltage:	70 volts maximum
Output Current:	0-3 amps dc
Stop Charge Voltage Sensor Range:	0-70 vdc
Stop Charge Voltage Sensor Range Resolution:	0.05 volts
Stop Charge Voltage Sensor Range Drift:	0.02 percent maximum

4.2.6.3 Monitoring and Data Acquisition

The Monitoring and Data Acquisition functions of the Power Subsystem OSE is performed by the following:

Various Panel Meters--For monitoring dc voltages and current:

Range as required

Accuracy 1 percent full scale.

Calibration resistors accessible for calibrating to desired portion of meter scale.

Self Test Calibration Source Assembly--All dc voltage sources:

Accuracy	> ± 0.05 percent
Drift	< ± 0.2 percent
All ac Voltage Sources	
Accuracy	> ±0.1 percent
Drift	< ±0.05 percent
All Load Resistors	
Accuracy	± 0.1 percent
Drift	± 0.1 percent

Analog Tolerance Detectors--Stable solid state voltage comparators perform go-no-go decisions with high speed, accuracy, and repeatability. High and low limits are established by multiturn precision potentiometers.

Accuracy	0.1 percent
Repeatability	500 microvolt
Speed	100 millisecond maximum

Meter Shunts--A variety of meter shunts are utilized throughout the Adapter Rack and Power and Control Console. Accuracy of shunts is greater than 0.1 percent.

Integrating Digital Voltmeter--The following applies:

Common Mode Rejection	140 db at all frequencies including dc
Ranges	0.1, 1, 10, 100, 1000V, 300 percent over-ranging permitted on 0.1, 1, 10, and 100V ranges
Accuracy	±0.01 percent of reading ± 0.005 percent of full scale, ± 1 digit.
Calibration Source	1 volt ± 0.006 percent 6 month stability
Input impedance	10 megohm on 10, 100, 1000V ranges. 1 megohm on 1V range. 100K on 0.1V range.
Output	BCD code for measured data, function, and range

True rms to dc Converter--The converter measures the actual rms value of the ac voltage and presents a proportioned dc output for monitoring with the above digital voltmeter.

Response time	Typically 2 sec to within 1 percent of final value for step change
Accuracy	± 1 percent of full scale
Input Impedance	10 megohm

True rms Meter--A rack mounted true rms voltmeter providing 1/4 percent accuracy has been incorporated in the OSE as a backup to the converter/digital voltmeter combination.

Range	0.1 to 1000 volts
Accuracy	1/4 percent 0.1 to 300 volts, 100 cps to 10 kc

Digital Recorder--The output of the Data Acquisition System is printed out by a digital printer. The accuracy of the printed output is equal to the driving source. The recorder is essentially a slave to the digital comparator. The printing rate is five lines per second maximum.

Programmer--Scanner--A guarded crossbar scanner is incorporated in the Data Acquisition System to sequentially transfer information from up to 200 three-wire signal sources to the input of the digital voltmeter/counter or true rms to dc converter. The assembly accommodates up to 20 different programs and is easily expanded to 40 by the addition of plug-in boards. Front panel access is provided to programming boards. The programmer assembly is completely solid state.

Digital Clock--The digital clock provides both visual and electrical (BCD) outputs of hours, minutes, and seconds. A time base switch selects either 60 cps or external 1 pulse per second (pps) reference signal.

Strip Recorder--An analog multispeed strip chart recorder provides a capability for continuous recording and monitoring of any single channel.

Solid state servo amplifiers are utilized.

Chart size	6" x 100', 5" writing width
Chart Speeds	1, 2, 4, 8 in/min; 1, 2, 4, 8 in/hr
Spans	5, 10, 50, 100, 500 mV; 1, 5, 10, 50, 100V full scale
Input resistance	200,000 ohm/volt through 10V span; 2 megohms on all others.
Accuracy	Better than 0.2 percent full scale

Tape Punch and Electronic Complex--A solid state electronic coupler accepts BCD digital data from the Data Acquisition System and converts the information to an IBM, 8 level code for the high-speed tape punch. Maximum speed of the tape punch is 110 characters per second.

Digital Thermometer--The following applies.

Range	000.0 to 100.0°C
Accuracy	± 0.15°C instrument
	± 0.20°C probe
Repeatability	0.05°C (visual)
	0.10°C (BCD output)
Power input	105-125 vac, 600 cps, 25 watts

X-Y Plotter--The following applies

Range (each axis)	0.5, 1, 5, 10, 50 mV/inch
	0.1, 0.5, 1, 5, 10 V/inch
Paper size	8 1/2 x 11 inches

Input resistance	200,000 ohm/volt, full scale
Accuracy	Better than 0.2 percent, full scale
Slewing rate	15 inches/sec
Power input	115 vac, 60 cps, 80 watts

4.2.6.4 Solar Panel Special OSE

Dynamic Load--The dynamic load is a transistorized voltage dependent loading device.

Range	0-120 volts, continuously variable or in 40 steps of 3 volts each
Maximum power dissipation	200 watts
Maximum input voltage	120 volts
Maximum current	6 amperes

Sun Tracker--The following applies.

Azimuth range	$\pm$ 200 degrees
Elevation range	$\pm$ 90 degrees
Slewing rate - manual	0-90°/minute
Slewing rate - autotrack	5°/minute maximum
Tracking accuracy	Better than 1/2 degree

Solar Panel Exciter--The following applies.

Area of illumination	15 sq ft
Lamp color temperature	2800° $\pm$ 50°K
Uniformity of illumination	$\pm$ 6 percent over entire area of illumination

4.2.7 Physical Characteristics and Constraints

4.2.7.1 Module and Subsystem Test OSE

The Module and Subsystem Test OSE is packaged into three six-foot rack cabinets and a single four-foot portable rack cabinet which contains the tape punch equipment. Chassis slides are utilized where practicable. The following electrical power service will be required:

117 vac, 60 cps, single phase, 3 kW

120/208 vac, 400 cps, three phase, 3 kW

The Power and Control cabinet and the Data Acquisition System cabinet will be equipped with forced air blowers and air filters.

4.2.7.2 Solar Panel Test OSE

The Solar Panel Test Console consists of two five-foot rack cabinets, each with caster bases. Chassis slides will be utilized where practicable.

Power input required: 117 vac, ± 10 percent, 60 cps, 1.5 KW.

The Solar Panel Exciter equipment requires an air-conditioned area approximately 15 feet by 18 feet for operation.

Power Input required: 117V ± 10 percent, 60 cps, 12 KW.

4.2.7.3 Battery OSE

The battery test console consists of one five-foot rack cabinet with caster base. Chassis slides will be utilized where practicable.

Power Input required: 117 V a.c. ± 10 percent, 60 cps, 0.75 KW.

Intensity	up to 140 mW/cm^2 sunlight
Stability of color temperature and intensity	Better than 2 percent over a six-hour period

4.2.8 Safety

The OSE incorporates circuit designs and safety features offering maximum protection to the power subsystem while the two are interconnected. These features include (but are not limited to) the following:

1) Overvoltage protection and current limiting on External Power Supply, Solar Panel Simulators, Battery Simulator, and Battery Chargers.
2) OSE/Power Subsystem interface connectors are noninterchangeable.
3) Isolation of power circuits from monitor circuits in all OSE/Power Subsystem cables and connectors.
4) Visual and Audio alarm signals provide immediate operator awareness of an out-of-tolerance condition in the power subsystem.
5) Built-in self test capability of internal supplies, controls, and monitoring equipment.

It is assumed that all monitor outputs in the power subsystem include adequate circuit isolation to assure its own protection. Should this not be the case, isolation networks will be added, in the OSE, to all lines so involved.

The OSE operating procedure requires a compatability test of the OSE, using either nonflight power subsystem modules or module simulators, before the OSE is interfaced with flight equipment.

4.2.9 Electrical Power SSTE Checkout and Test

A series of OSE tests and inspections will be conducted during and following fabrication to assure compliance with the reliability requirements of the Voyager OSE and to qualify it for use with the power subsystem. The OSE fabrication and test plan outline is shown in Figure 4.2-7.

The test plan outline encompasses the entire OSE test sequence from component level to end item qualification, complex installation and checkout, and test complex compatibility.

The OSE qualification test verifies the OSE/power subsystem compatibility, monitoring accuracy, and control capability. This test is performed on all OSE prior to its interface with power subsystem assemblies.

A high ambient temperature performance test, transportation vibration test, and electro-magnetic interference tests are performed on the first article system test complex and launch complex OSE.

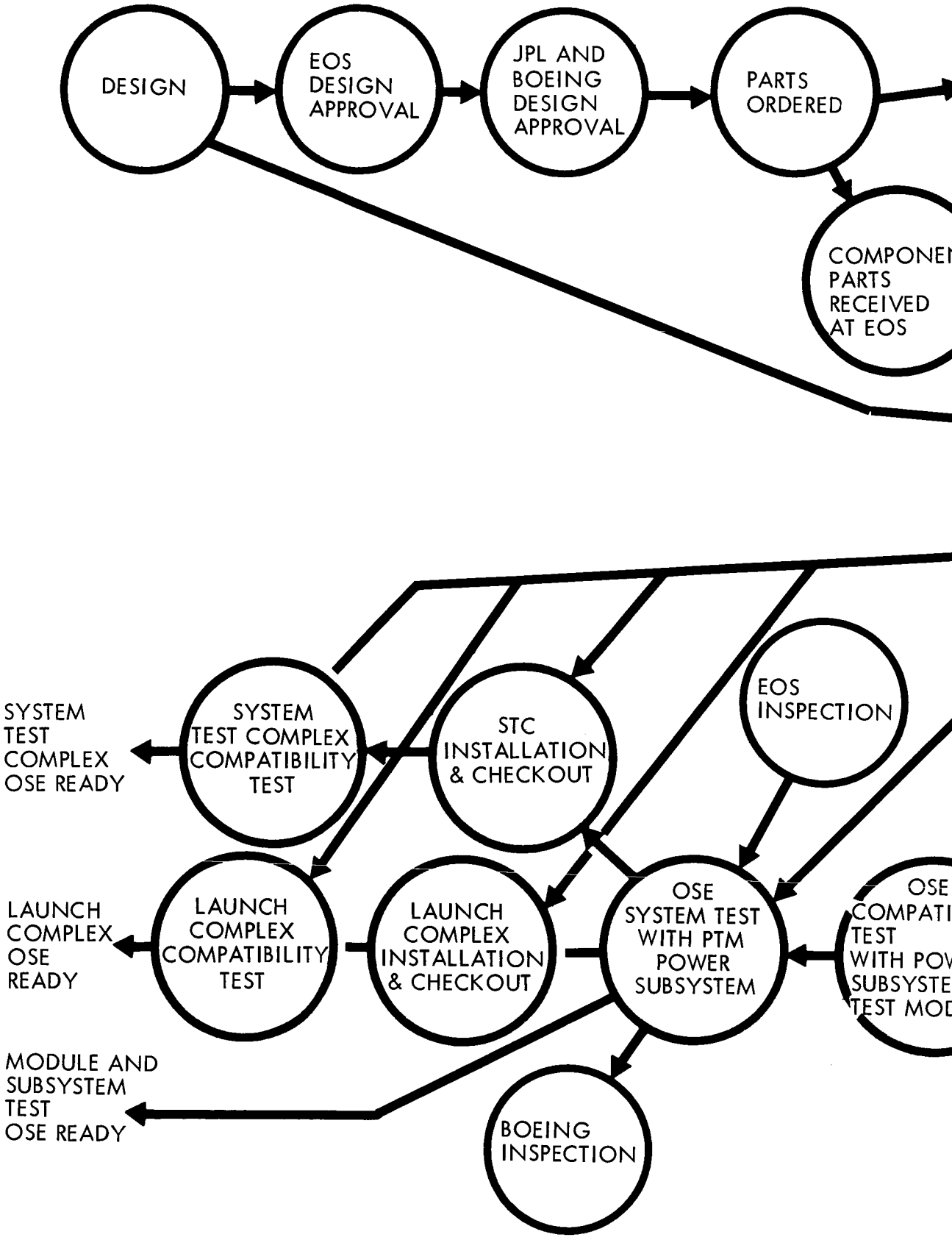
DESIGN
EOS DESIGN APPROVAL
JPL AND BOEING DESIGN APPROVAL
PARTS ORDERED
COMPONEN PARTS RECEIVED AT EOS
SYSTEM TEST COMPLEX OSE READY
SYSTEM TEST COMPLEX COMPATIBILITY TEST
STC INSTALLATION & CHECKOUT
EOS INSPECTION
LAUNCH COMPLEX OSE READY
LAUNCH COMPLEX COMPATIBILITY TEST
LAUNCH COMPLEX INSTALLATION & CHECKOUT
OSE SYSTEM TEST WITH PTM POWER SUBSYSTEM
OSE COMPATI TEST WITH POW SUBSYSTE TEST MOD
MODULE AND SUBSYSTEM TEST OSE READY
BOEING INSPECTION

81 (1)

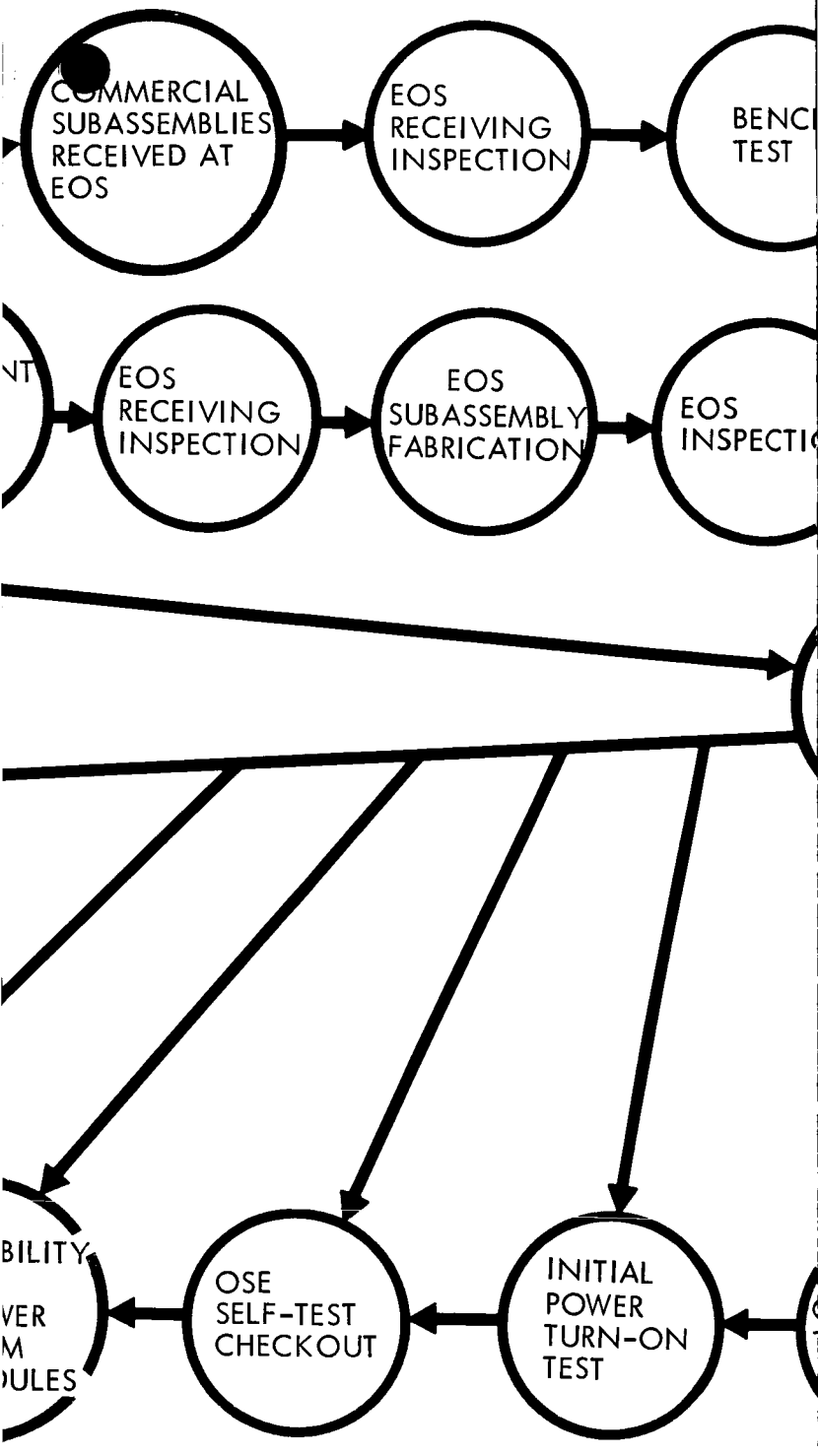

Figure 4.2-7: Fabrication and Test Plan for
Complex, Launch Complex Eq
T

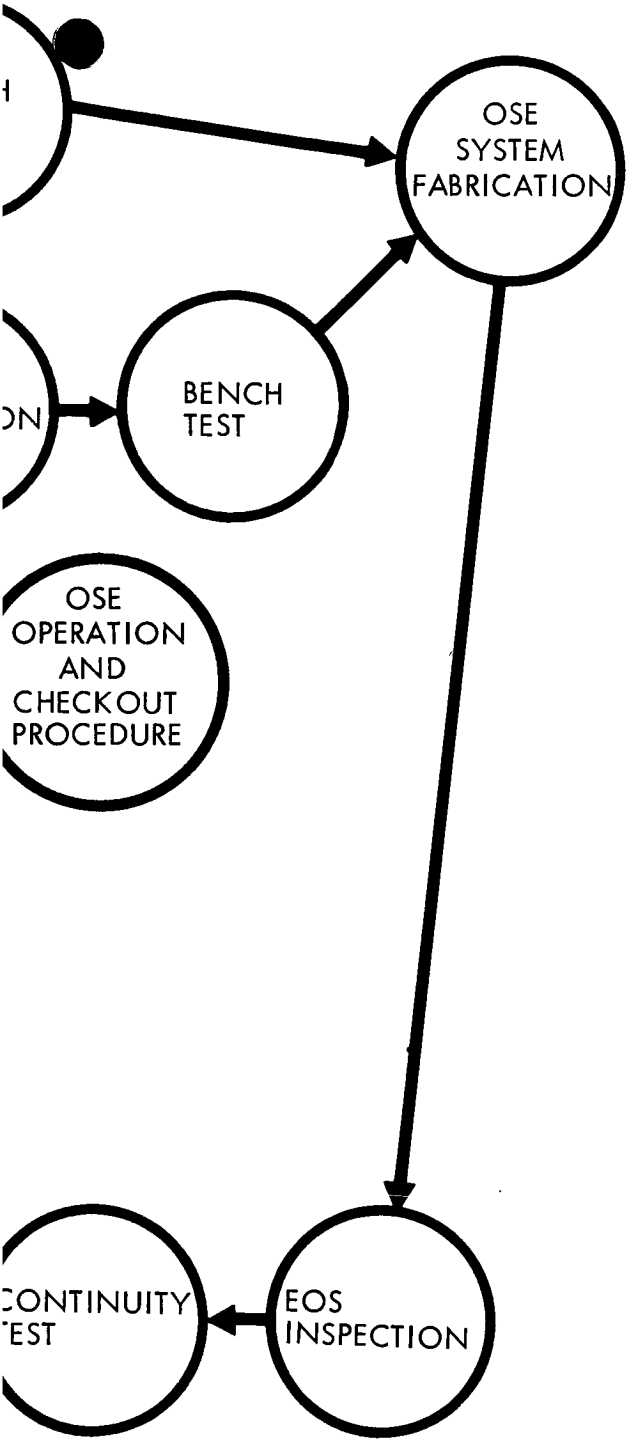

Power Subsystem OSE — System Test
uipment, and Module and Subsystem
est Equipment

4.3 PROPULSION AND REACTION CONTROL SUBSYSTEM OSE

Voyager spacecraft propulsion and reaction control subsystems require supporting equipments which verify and condition the subsystem for flight. Equipments required are those which provide for propellant and solid motor loadings, pressurization system loading and verification of spacecraft subsystem status and performance.

4.3.1 Equipment Identification and Intended Use

This section contains those items of operational support equipment required for testing, servicing and handling of the Voyager spacecraft midcourse correction and orbit insertion propulsion subsystems and the reaction control subsystem. Propulsion system test equipment and area of use are shown in Figure 4.3-1.

4.3.2 Disign Concepts, Requirements and Constraints

The propulsion system OSE concepts use existing proven methods and designs with no advancement to the state-of-art. The Voyager propulsion subsystem OSE is similar to that for other unmanned spacecraft programs including Mariner, Surveyor and Lunar Orbiter. Basic differences between support equipment requirements for Voyager and Surveyor or Mariner OSE are due to:

1) Greater propellant requirements for Voyager.

2) Multiple monopropellant engines for Voyager.

.

Basic difference between support equipment requirements for the Voyager liquid midcourse and orbit trim propulsion and Lunar Orbiter is

Figure 4.3-1: PROPULSION OSE--AREA OF USE AND FUNCTION

Equipment	Area of Use	Function
Fuel Servicing Unit	SSTE/ESA	Service Subsystem Propellant
Propellant System Purge Flush and Dry Unit	SSTE/ESA	Condition Spacecraft Propellant System for Flight Loading
Nitrogen Servicing Unit and Propulsion System Test Unit	STC	Used in Performance of Leak Flow and Pressure Testing of Propulsion Module Assembly (less orbit insertion motor, propellants and pyrotechnic squibs)
	SSTE/ESA	Used in Checkout Testing of Complete Propulsion Module Assembly and Pressurization of N_2 Tanks - N_2 Unit Supports Propellant Servicing
Freon Servicing Unit	SSTE/ESA	Used to Service Orbit Insertion Propulsion System System TVC System
Propulsion Module Assembly Handling and Installation Dolly	STC System Test Complex (Hangar Area Clean Room)	Used in Handling Moving and Testing the Propulsion Module Assembly (less OIPS Propellant and squibs)
	SSTE/ESA	Same as for above - OPIS and Squibs Installed
Solid Motor Transporter	SSTE STC ESA	Supports and Protects Solid Motor in Transit until Motor Unloaded.

due to monopropellant usage on Voyager versus bipropellants for Lunar Orbiter.

Requirements of the spacecraft propulsion and reaction control subsystems which impose constraints on the OSE are discussed in Sections 4.3 and 4.7 of D2-82709-1.

Design limitations imposed on the OSE are in the areas of: handling, storing, modes of testing, and installation and testing of potentially hazardous components. These hazardous components include the solid propellant motor, pyrotechnic isolation squibs, toxic and corrosive hydrazine propellant and high pressure vessels.

Test equipment for checkout of the pyrotechnic isolation squibs and the solid propellant orbit insertion motor is accomplished by test equipment shown in Section 4.4.5. Tests on these components consist of electrical circuit continuity checks.

4.3.3 Applicable Documents

1) Boeing Document D2-100228-1, Mechanical Servicing and Test Equipment Specification (Design Requirements)
2) Boeing Document D2-72076, Purge, Dry and Flush Units, Propellant Systems
3) Boeing Document D2-72075, Servicing Units, Propellants

4.3.4 Functional Description

Functional and descriptive characteristics for the equipment identified in Figure 4.3-1 are given below. Interrelated use of the equipments is shown in the Servicing and Test Equipment Functional Interface Diagram, Figure 4.3-2.

4.3.4.1 Fuel Servicing Unit

This unit is a mobile propellant servicing tanker consisting of a trailer, a hydrazine (N_2H_4) propellant storage tank with a minimum capacity of 9.0 cubic feet, manually operated control circuits for controlling propellant transfer flows and pressure, and a 0 to 100 psig nitrogen gas circuit.

The unit performs the following functions:

1) Storing N_2H_4 propellant.
2) Transferring and loading a minimum of 410 pounds of propellant at a controlled rate to the spacecraft.
3) Weighing the loaded propellants to an accuracy of $\pm$.05% of total transferred.

A block diagram of the fuel servicing unit is shown in Figure 4.3-3.

The unit operates in a closed fluid-vapor loop with the propulsion subsystem. Propellant transfer is accomplished through pressurization of the supply tank with nitrogen gas. Provisions are incorporated for collecting and processing toxic vapors to a safe level (5 parts per million of N_2H_4 in nitrogen). Filters are used for removing

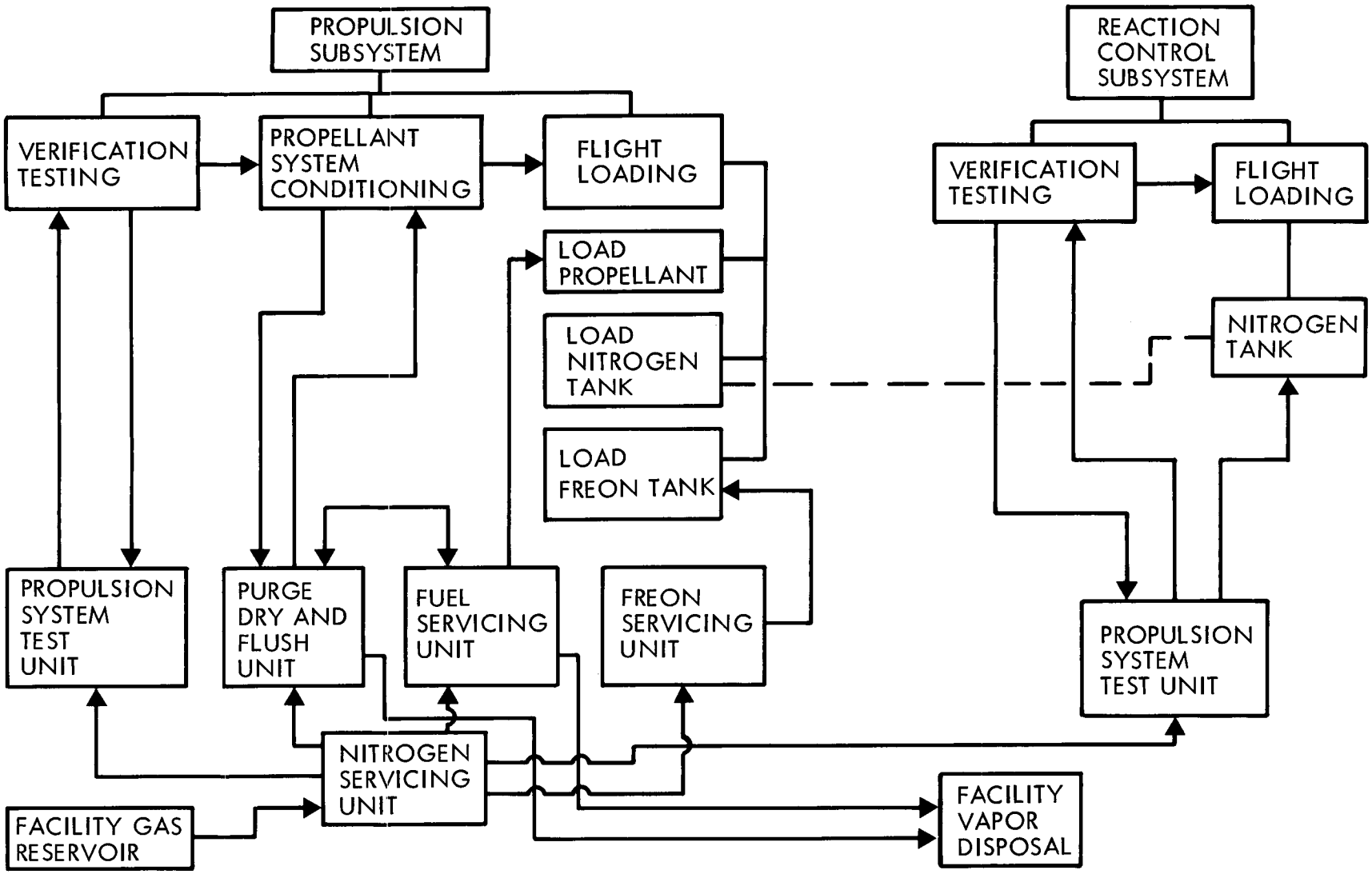

Figure 4.3-2: Servicing and Test Equipment Functional Interface

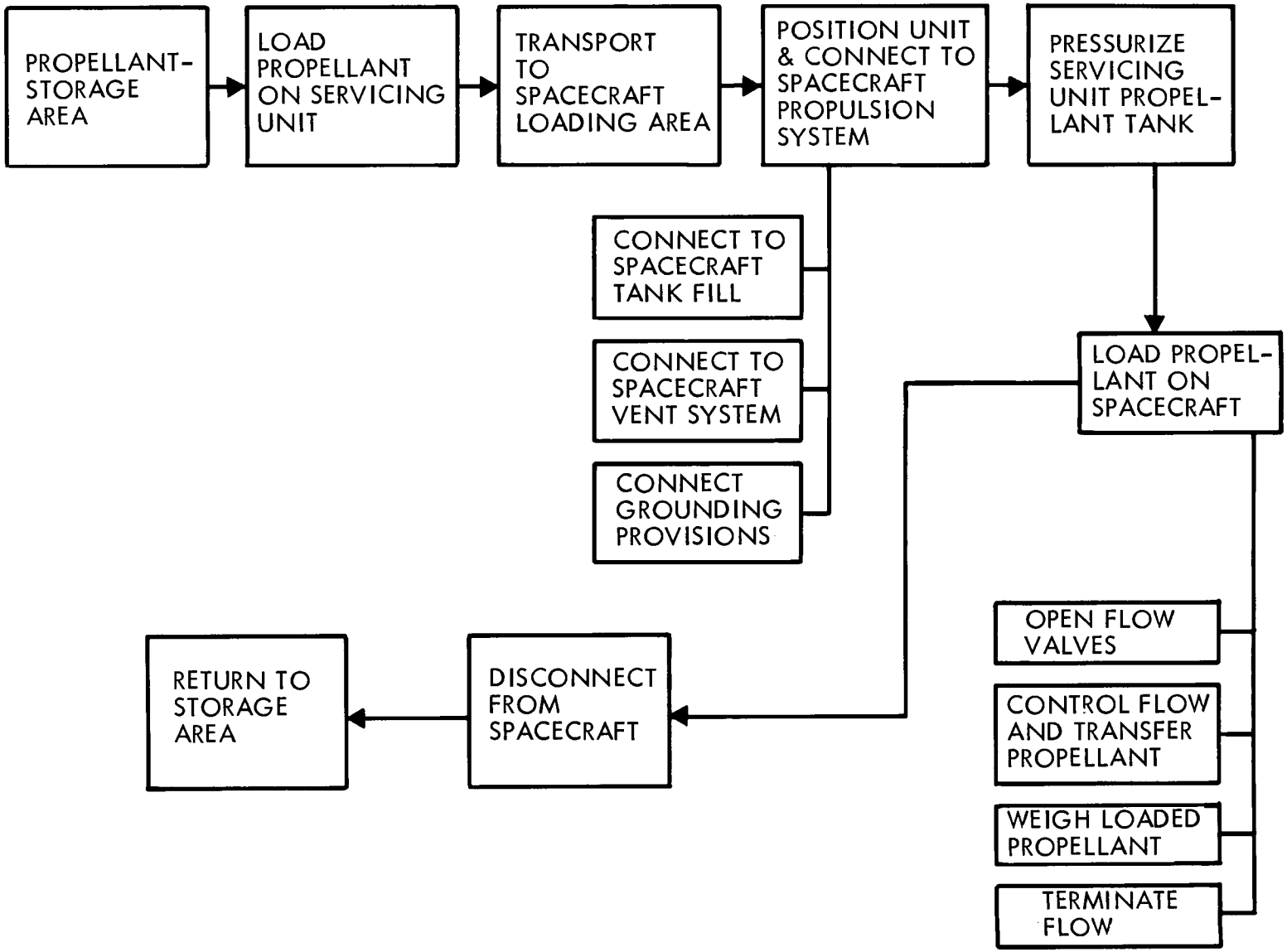

Figure 4.3-3: Fuel Servicing Unit — Functional Block Diagram

solid particles from the propellant to 5 micron nominal and 20 micron absolute; temperature gages provide for monitoring the propellant bulk temperature between 35°F to 99°F with an accuracy of ±1% of full scale range.

The fuel servicing unit is similar to those defined for supporting the Surveyor or Lunar Orbiter; the basic difference is in storage tank capacity. The Voyager uses hydrazine propellant whereas the others use Aerozine 50; however, materials are compatible with both fuels.

4.3.4.2 Propellant System Purge, Dry and Flush Unit

This unit is trailer-mounted and incorporates solvent supply tankage, receiving tankage for used solvent and unloaded propellants, flow control, monitoring equipment and other accessories required for safe storage and transfer of solvents and propellants. A functional block diagram of the unit is shown in Figure 4.3-4.

The unit supports the loading and unloading of the hydrazine propellant subsystem. The unit performs flushing, purging, and drying of the propellant tanks and lines for conditioning them for flight loading. It is also used to decontaminate the fuel servicing unit.

The unit operates in a closed liquid vapor loop with the spacecraft propulsion system or propellant servicing unit and it contains an integral vapor treatment system for processing toxic vapors to a safe level. It is functionally divided into a 0 to 100 psig nitrogen circuit, a solvent supply circuit, a solvent/propellant receiving circuit

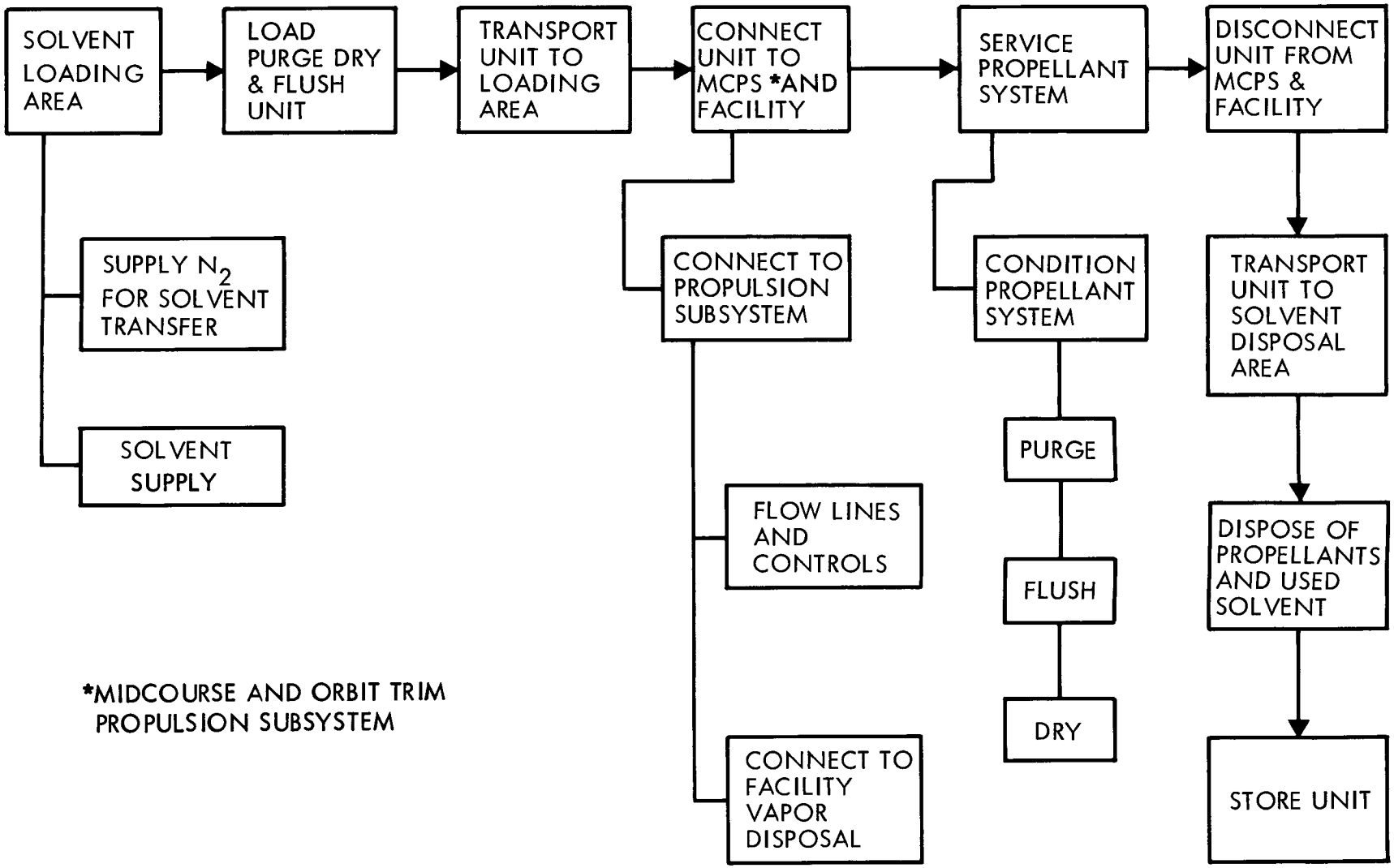

Figure 4.3-4: Propellant System Purge Dry and Flush Unit Functional Block Diagram

and a vent and a vapor disposal system. Manually controlled flow and shutoff valves control operational modes. Nitrogen pressurization of the solvent tanks is used for solvent transfer operations.

The equipment, excepting its capacity, is essentially identical to that provided for the Surveyor, Mariner and Lunar Orbiter Programs.

4.3.4.3 Nitrogen Servicing Unit

The nitrogen servicing unit is of console type configuration and consists of control sections which contain pressure regulating and shutoff valves, dryers, filters, and connecting plumbing necessary to supply and control gaseous nitrogen and helium pressures and flows. Figures 4.3-5 and 4.3-6 show typical configuration and functional block diagrams of this servicing unit.

The unit performs the functions of regulating and distributing facility supplied 6000 and 2200 psig nitrogen and helium pressure for use in performance of leak and functional testing of the propulsion and reaction control subsystem. It is used for purging and pressurization of the spacecraft subsystems and propellant servicing unit. During spacecraft propulsion and reaction control subsystems leak checks, functional tests and system pressurization, the unit is used in conjunction with the propulsion system test unit.

Drying and filtration equipment filters and dries the gases and filters out particles down to 5 micron nominal, 13 micron absolute. A dewpoint of -100°F is maintained for the delivered gases.

WEIGHT: 600 POUNDS
VOLUME: 500 CUBIC FEET

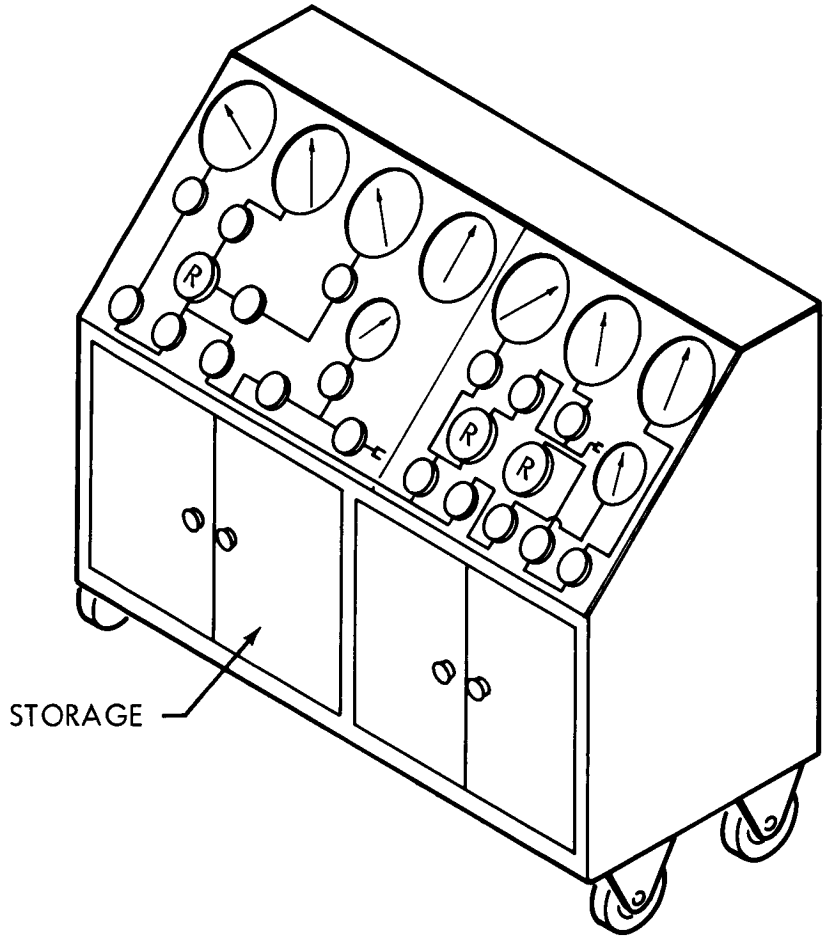

Figure 4.3-5: Nitrogen Servicing Unit

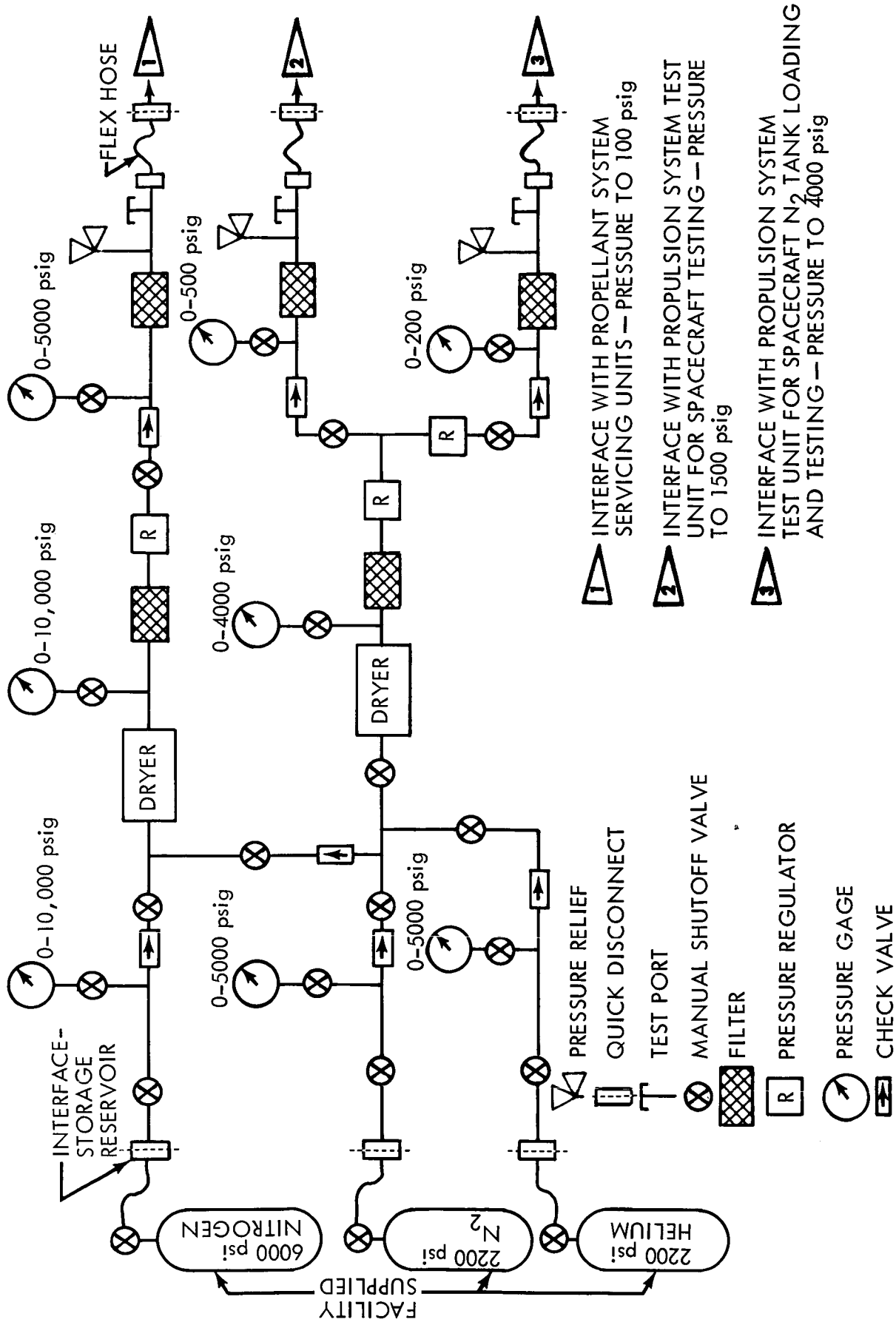

Figure 4.3-6: Nitrogen Servicing Unit — Functional Diagram

Pressure regulation is manually controlled and gage-monitored in the individual pressure circuits. Pressure ranges for the gages in the high pressure circuits are 0 to 10,000 and 0 to 5000 psig and for the low pressure circuits 0 to 500 psig and 0 to 200 psig.

Nitrogen servicing units with the above capabilities are provided for the Surveyor and Lunar Orbiter Programs. They are, therefore, considered available for Voyager support.

4.3.4.4 Propulsion System Test Unit

This unit consists of individual test groups which include flow meters, pressure gage assemblies, mass spectrometer, dew analyzers, temperature monitoring equipment, and an electrical test group.

The unit performs mechanical and electrical tests on the spacecraft propulsion and reaction control systems. These tests include leak checks, regulation and flow testing of the system pressure regulators, and actuation and response testing on the electrical solenoids in the propellant and nitrogen pressure circuits of the spacecraft midcourse and orbit trim propulsion, orbit insertion propulsion, thrust vector control (TVC), and reaction control subsystems. The electrical test equipment performs the functions of 1) checking the response of the reaction control nozzle valves and midcourse propulsion engine jet vanes to simulated autopilot signals, and 2) testing the orbit insertion motor TVC system response to simulated autopilot signals.

The unit is supplied with gas test pressures from the N_2 servicing unit and electrical power for distribution to the spacecraft subsystem test points. The test units measure system regulator pressures and flows, gas temperatures, system leakage and operational characteristics of the propellant and nitrogen pressurization system. It measures actuation and response of the electrical components on the propulsion and reaction control nozzles and TVC of the orbit insertion motor.

The propulsion subsystem test unit design is similar to that for Lunar Orbiter. Equipments, except for the autopilot simulator, are conventional and readily available.

4.3.4.5 Freon Servicing Unit

The freon servicing unit is functionally divided into: 1) a freon supply circuit, 2) a nitrogen pressure and purge circuit, and 3) a weighing section. A schematic diagram of the unit is shown in Figure 4.3-7. The unit is used to service the TVC system of the solid propellant orbit insertion motor. The unit contains the necessary control valves and monitoring devices for purging the freon container on the motor prior to servicing. Freon temperature must be kept within 50°F to 90°F during loading. The freon is pressure-fed into the motor tank by pressurizing the servicing unit freon tank with nitrogen. The unit also provides the equipment for weighing and loading 62 pounds of the freon.

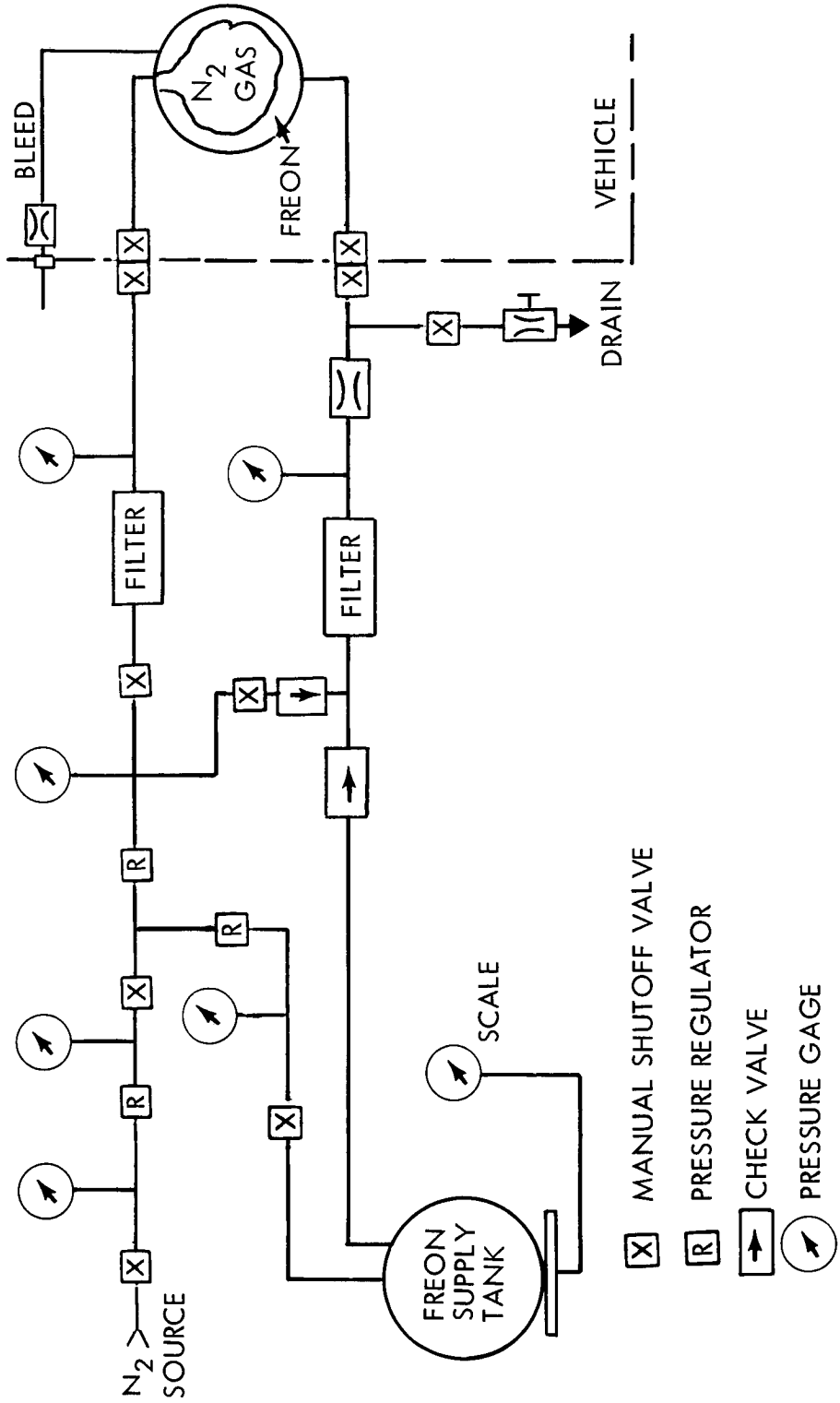

Figure 4.3-7: Freon Servicing Unit — Functional Diagram

4.3.4.6 Propulsion Assembly, Handling and Shipping Equipment

Solid Motor Transporter--The solid motor transporter basically consists of a mounting bed which provides cradling and shock absorption devices for adequately supporting and protecting the motor from damage during shipment of the motor. The unit provides for complete containment of the motor. Control of motor temperature between 50°F and 90°F is maintained through use of shipping vehicles and storage areas which have environmental temperature control provisions. A means is provided for continuous monitoring of air directly adjacent to the motor case. Protection against direct solar radiation and induced air currents will be provided by an outer enclosure. Availability of the transporter should pose no problem. Similar requirements and equipments have been used for transporting other solid rocket motors.

Propulsion Module Handling and Installation Dolly--This handling dolly consists of a metal framework mounted on wheels. The framework includes supporting surfaces compatible with support or mounting provisions on the propulsion module assembly. The dolly provides the capability for moving the propulsion module assembly (which includes all of the components of the midcourse correction and orbit insertion propulsion systems and the reaction control system) from an assembly or test area to the location where installation into the spacecraft is accomplished. Provisions are incorporated to allow the loaded dolly to be towed.

4.3.5 Interface Definition

Unless otherwise noted, the interfaces identified in the following are mechanical type connections. Interface loads at these connections are either liquid or gas pressures.

4.3.5.1 Fuel Servicing Unit Interfaces (See Figure 4.3-8)

The unit will interface with:

1) Propellant Fuel Fill -- 0 to 50 psia fuel pressure
2) Propellant Fuel Tank N_2 Pressure Inlet -- 0 to 60 psia
3) Purge, Dry and Flush Unit Solvent Supply and Receiving Tank Connecting Hoses and Vapor Vent System (These interfaces when conditioning fuel unit.) -- 0 to 50 psig
4) Nitrogen Source -- 0 to 100 psig N_2 pressure
5) Facility Vapor Ducting System
6) Grounding Connections for Facility Ground and Spacecraft

4.3.5.2 Propellant System Purge, Dry and Flush Unit Interfaces (See Figure 4.3-9) The unit will interface with:

1) Fill and Drain Connection of Spacecraft Propulsion System--0 to 50 psig
2) Spacecraft Propellant Tank Vent -- 0 to 50 psia
3) Servicing Unit (See Section 4.3.5.1). -- 0 to 50 psig
4) Nitrogen Source -- 0 to 100 psig
5) Facility Vapor Ducting System
6) Spacecraft Interface Connector Grounding Fittings

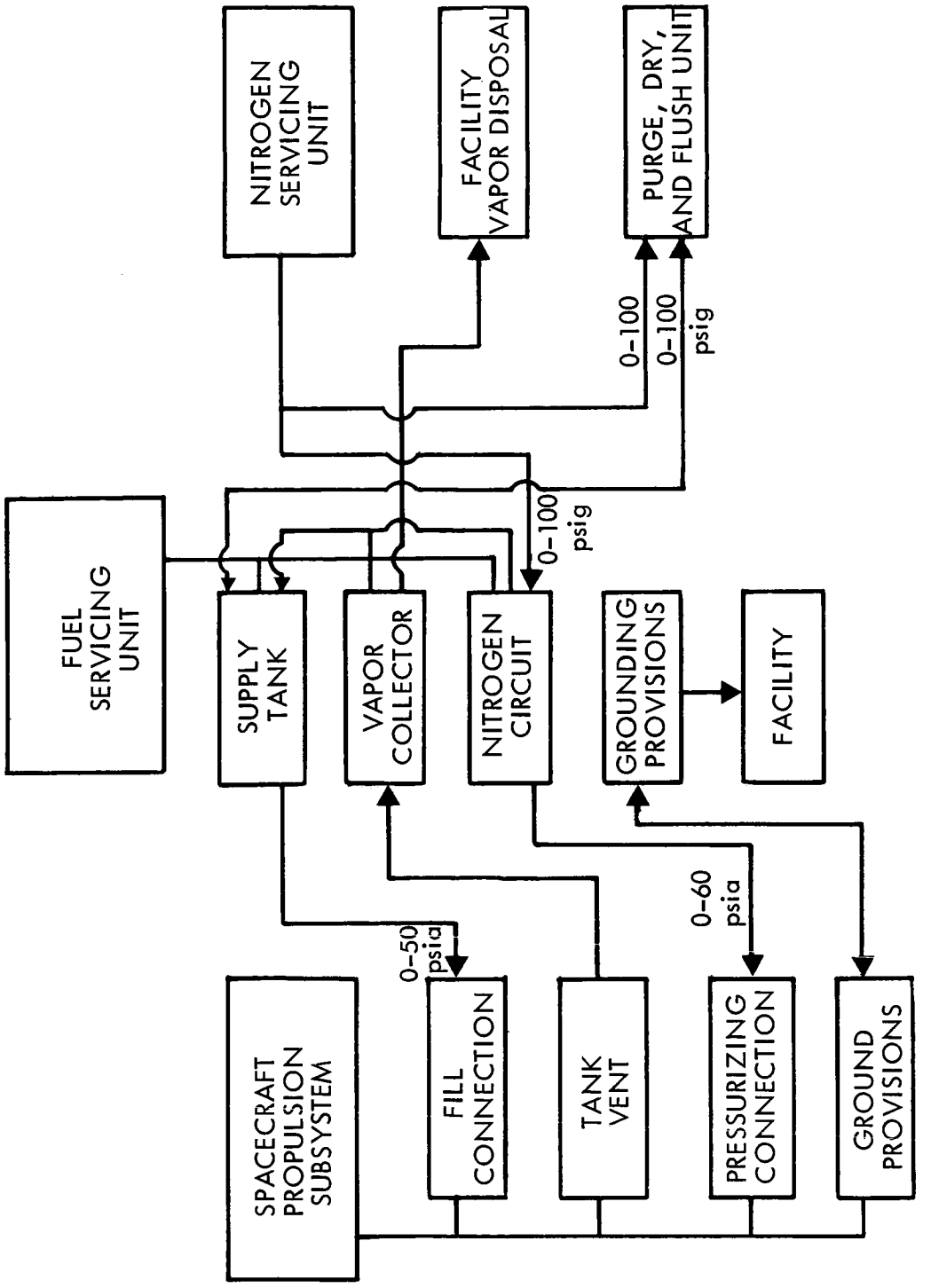

Figure 4.3-8: Fuel Servicing Unit — Interface Block Diagram

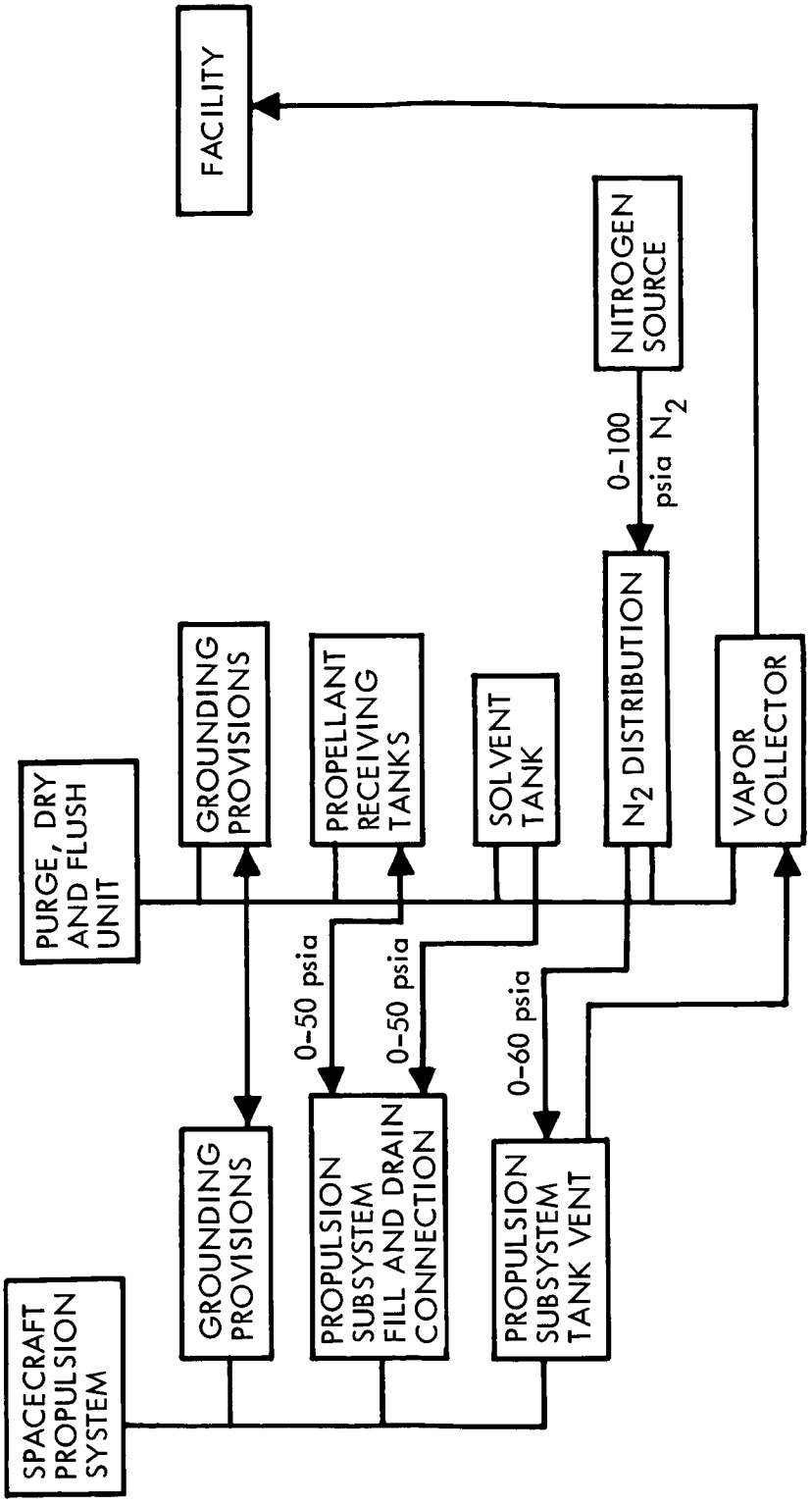

Figure 4.3-9: Propulsion System Purge, Dry and Flush Unit — Interface Block Diagram

4.3.5.3 Nitrogen Servicing Unit Interfaces (See Figure 4.3-10)

The unit interfaces with

1) Propulsion System Test Unit -- 0 to 3500 psia N_2 pressure
2) Propellant System Purge, Dry and Flush Unit -- 0 to 100 psig N_2 pressure
3) Propellant Servicing Unit -- 0 to 100 psig N_2 pressure
4) Facility Supplied Nitrogen and Helium Pressure Reservoirs -- 2200 to 6000 psig

4.3.5.4 Propulsion System Test Unit Interfaces (See Figure 4.3-11 and Figure 4.3-12)

The unit interfaces with the spacecraft propulsion system:

1) Propellant Tankage -- N_2 pressure to 315 psia
2) N_2 Tank -- N_2 pressure to 3500 psia
3) N_2 System Plumbing -- N_2 pressure up to 3500 psia
4) Propellant Tank Pressure Transducer -- Electrical
5) Propellant System Plumbing -- N_2 pressure up to 315 psia
6) Electrical Solenoids -- 28 to 35 VDC
7) Midcourse Propulsion Engine Jet Vane-Actuators
8) Orbit Insertion TVC Secondary Injection Control Valves

The unit interfaces with the spacecraft reaction control system:

1) Plumbing -- N_2 pressure to 3500 psia
2) Nitrogen Tank for Thrusting Nozzles -- N_2 pressure to 3500 psia
3) Solenoids -- Electrical 28 to 35 VDC

The unit also interfaces with the nitrogen servicing unit and the electrical power supply.

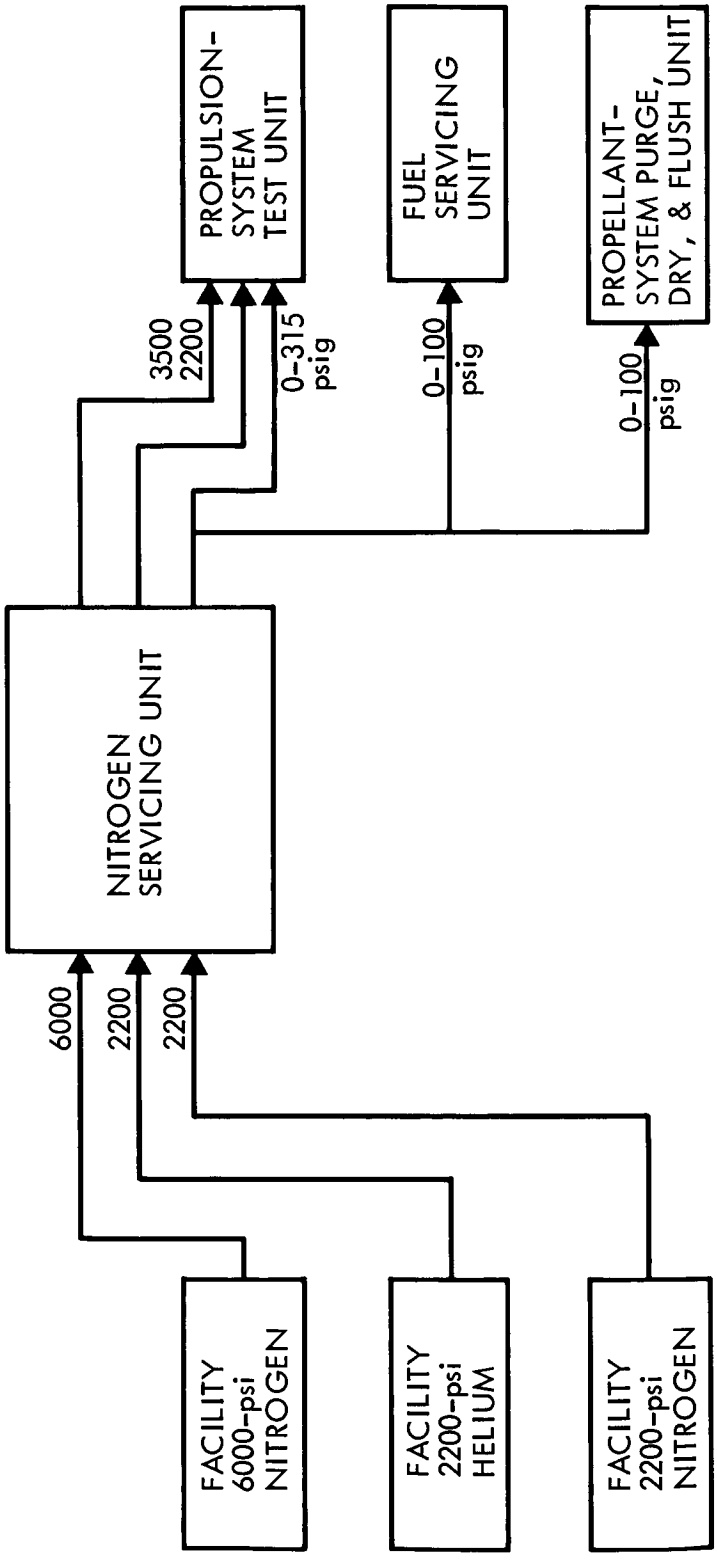

Figure 4.3-10: Nitrogen Servicing Unit — Interface Block Diagram

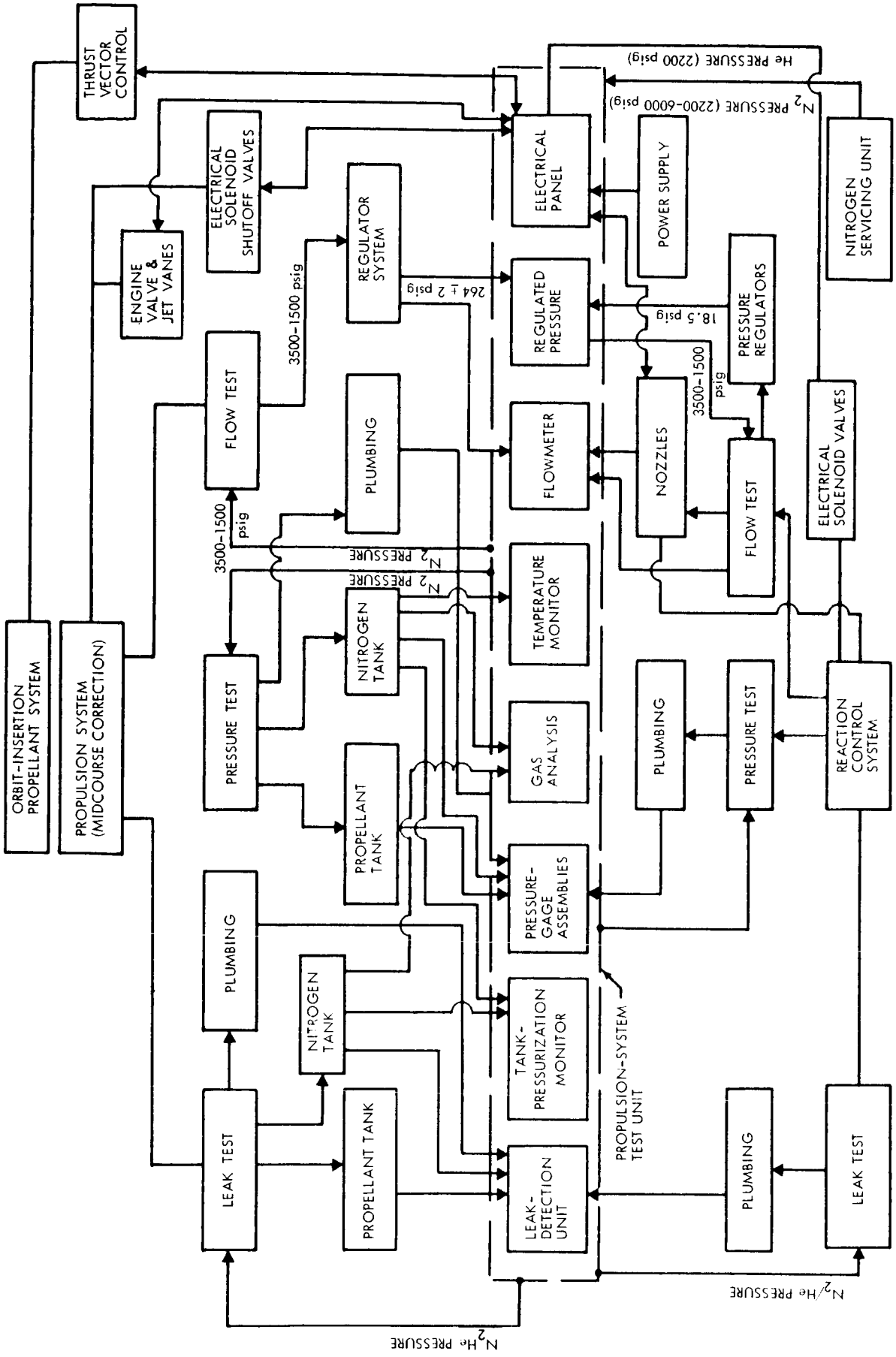

Figure 4.3-11: Propulsion System Test Unit — Interface Block Diagram

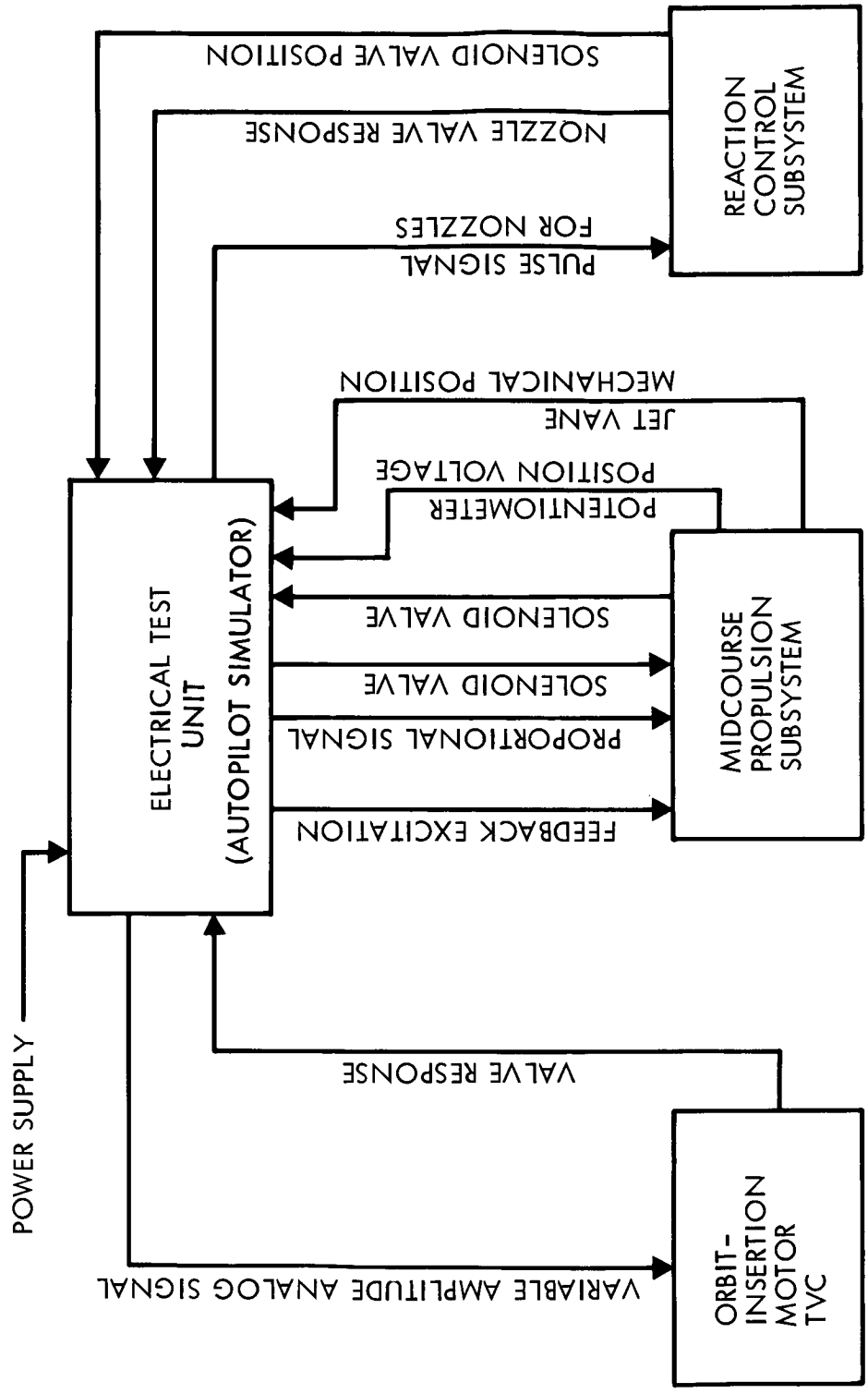

Figure 4.3-12: Propulsion System Interface — Autopilot Simulator

4.3.5.5 Freon Servicing Unit

The freon servicing unit interfaces with:

1) The Solid Orbit Insertion Motor TVC Freon Tank

2) The Nitrogen Servicing Unit

4.3.6 Performance Parameters

The equipment will have the capability to perform functions as shown in the following:

4.3.6.1 Fuel Servicing Unit

1) Transfer and load 410 pounds of N_2H_4 propellants at a minimum flow rate of 2 gpm and with weighing accuracy of .05% of total propellant weight transferred.

2) Filter propellants to 5 micron nominal, 20 micron absolute.

3) Collect and dilute toxic vented vapors to 5 ppm of N_2H_4 in nitrogen.

4.3.6.2 Propellant System Purge, Dry and Flush Unit

1) Provide capacity for multiple solvent flushes of spacecraft propellant system.

2) Detect concentrations of N_2H_4 in solvent in 10 ppm increments over a range of 0 to 100 ppm.

3) Transfer flushing solvent to spacecraft at a minimum rate of 2 gpm.

4) Remove flushing solvent or propellants from spacecraft at a minimum flow rate of 1 gpm.

5) Dilute toxic vapors to 5 ppm of N_2H_4 in nitrogen.

4.3.6.3 Nitrogen Servicing Unit

1) Regulate 6000 psig and 2200 psig inlet gas pressures down to 2200 psig and 50 psig respectively.

2) Filter and dry gases to 5 micron nominal, 13 micron absolute at $-100^{o}F$ dewpoint.

4.3.6.4 Propulsion System Test Unit

1) Measure regulated pressures to 264 ± 2 psig in midcourse propulsion system.

2) Measure regulated pressures to 50 psia in reaction control system.

3) Detect leaks to 1×10^{-7} atm cc/sec.

4) Filter gases to .3 micron nominal, 1.2 micron absolute.

5) Determine dewpoint of gases in spacecraft tank for verifying dryness over dewpoint range of $+70^{o}F$ to $-80^{o}F$.

6) Check electrical solenoid shutoff valves in spacecraft propellant and nitrogen pressurization systems.

7) Provide electrical pulses of 20 milliseconds to continuous of fixed amplitude to reaction control system nozzle control valves and record valve response rate.

8) For midcourse propulsion checkout, provide analog DC signal voltage controllable in amplitude. Provide an excitation voltage to the position potentiometer. Measure potentiometer position voltage and mechanical alignment of jet vanes.

9) For orbit insertion motor TVC checkout, provide a variable amplitude analog DC signal and measure valve response.

10) Monitor temperature of gases during testing.

4.3.6.5 Freon Servicing Unit

1) Load solid orbit insertion motor TVC freon tank with 62 pounds of freon to an accuracy of 0.5 percent.

2) Purge freon tank prior to loading.

3) Load freon within range of $50^{\circ}F$ to $90^{\circ}F$.

4.3.6.6 Solid Motor Transporter

1) Transport solid motor weighing 2626 pounds.

2) Provide protection against environments.

3) Provide for limiting shock loads to a maximum of 3 g's in any direction.

4) Continuous monitoring of temperature of air adjacent to motor.

4.3.6.7 Propulsion Module Handling and Installation Dolly

1) Provide for safe handling of 3500 pound module assembly.

4.3.7 Physical Characteristics and Constraints

1) All tanks and piping shall conform to the applicable ASME codes.

2) Gas pressure gages shall be equipped with blow-out back panels or equivalent for personnel safety.

3) Equipments shall be designed such that a single failure will cause minimum impairment to system operation and hazard to personnel. Included in such preventive measures will be relief and burst diaphragms for overpressures, and adequate shutoff valves.

4) Manually operated controls and instrumentation shall be panel mounted.

5) The fuel servicing and purge, dry and flush units shall meet the mobility requirements of MIL-M-008090D Type I, Class 2, Group A. These units shall be compatible with hydrazine N_2H_4.

4.3.8 Safety Considerations

Design of servicing, testing, and handling equipments for propulsion systems having solid propellants, liquid propellants, high pressure systems and pyrotechnic devices consider the following as they relate to system and personnel safety:

1) Toxicity of liquid propellants.
2) Dilution and disposal of toxic vapors.
3) Spillage of highly corrosive, highly toxic propellants.
4) Detonation of solid propellants and pyrotechnic devices.
5) Explosion hazards.
6) Fire hazards.
7) Contamination.

Support equipments utilizing high gas pressure circuits require safety factors and overpressure relief provisions. Safety devices are located in a manner that precludes additional hazards when they function.

The need for protective garments, deluge systems, warning devices, etc., should be considered for personnel in or adjacent to areas where toxic or explosive type propellants or equipment is handled.

4.3.9 Test

Operational support equipment tests consist of routine calibration and checkout at AFETR. These tests are required to ensure that the equipment is ready for operational use.

The tests consist of two types:

1) Periodic calibration against known standards.

2) Self-checking preoperational checkouts.

Items requiring periodic calibration are: pressure gages, temperature gages, electrical meters, regulators, weighing scales, and temperature recorders. These items are contained within OSE servicing units, test units and motor transporter.

The self-checking operations rely on dual gages. During preoperation checkout, identical dual gage readings assure that the readouts are within calibration limits. This concept is applicable to pressure, temperature gages and electric meters. The preoperation checkout for the temperature recorder (on the motor transporter) is to assure that a new recorder is in place and ready to operate.

4.4 ENGINEERING MECHANICS - OPERATIONAL SUPPORT EQUIPMENT

The operational support equipment required for support of the mechanisms and pyrotechnics subsystems is defined in this section. There is no OSE specifically applicable to the structure and cabling subsystems since that equipment identified at the system level, such as the alignment fixtures, described in 3.4, also serves as a structure equipment OSE item.

4.4.1 Mechanisms - Operational Support Equipment

This document section covers the SSTE necessary to support the following mechanisms; (1) VHF Antenna deployment, (2) Low Gain Antenna deployment, (3) Magnetometer Boom deployment, (4) Solar Panel deployment, (5) High Gain Antenna deployment and Pointing, (6) Scan Platform deployment and Pointing, (7) Planetary Scan Optics Cover Positioning, (8) Lower Positioning, and (9) Capsule and Barrier Separation. Of these, much of the SSTE covering the Solar Panels appears in Section 4.2.

Though the mechanisms required to perform these deployment or positioning functions are physically separated on the spacecraft, their functions in several instances are identical and are performed by identical components such as actuators or zero "g" simulating support devices. For this reason, the required SSTE is grouped where appropriate.

4.4.1.1 Vinsion Actuator Test Bench

Equipment Identification and Intended Usage--Hydraulic-bench types of equipment are required to check out the Vinsion actuators used to deploy: (1) VHF Antenna; (2) Low Gain Antenna; (3) Magnetometer Boom; and (4) High Gain Antenna. Though the actuators are not all identical, they are similar to the extent that the same test set-up is usable.

Design Concept, Requirements and Constraints--The test set-up must have capability for measuring force exerted over entire stroke of actuator plus a capability for timing the actuation stroke when a variety of loads are applied.

Functional Description--Since the Vinsion actuator is a self contained unit, the test bench needs only clevis type attachments to mount the actuator, a means of compressing the actuator and a means of maintaining a fixed load on the actuator as it extends. A hydraulic circuit with a variable pressure regulator is selected to allow actuator test load adjustments to be made.

Interface Definition--The interfaces are two clevis type attachments to mount the ends of the actuator in the test fixture.

Performance Parameters--Specific performance parameters are as yet undefined. Representative values are equally acceptable and are as follows:

1) Actuator stroke - 3 to 6 inches
2) Steady applied load - 15 to 200 pounds

Physical Characteristics and Constraints--The test bench is the size and

weight of a small hydraulics test bench with similar requirements for electric power and hydraulic pump and tank capacities.

Test--Self test procedures will be used.

4.4.1.2 Zero-g Simulator

Equipment Identification and Intended Usage--This equipment is required to counterbalance the weight of the following during their deployment cycle to demonstrate the adequacy of the deployment mechanisms: (1) VHF Antenna, (2) Low Gain Antenna, (3) Solar Panels, and (4) High Gain Antenna.

Design Concepts, Requirements, and Constraints--The test equipment consists of suitable support devices (probably weights suspended from overhead pulleys) to create essentially a zero "g" condition while the aforementioned devices are released from their stowed positions and deployed and locked in their extended positions while being acted upon by their deployment mechanisms. The only constraints on the device are that it closely simulate a zero "g" condition throughout the deployment cycle and that the test be performed after these booms and mechanisms are attached to the spacecraft.

Functional Description--The test equipment provides support at points compatible with the spacecraft components and allows deployment motions to take place as is done during flight. Supporting loads are applied in a manner and in orientation that produces no undesirable distortions. The ground equipment's inertia and response characteristics must be such that a valid deployment test may be carried out.

Interface Definition--Applicable interfaces are the cable attachments to the deploying element. The support elements are soft straps or cushioned pads since the booms, in some cases, act as wave guides and are highly susceptible to damage.

Performance Parameters--The test devices are able to accomodate deployment through 180 degrees rotation in a period of approximately 10 seconds.

Physical Characteristics and Constraints--The test equipment consists of lightweight cables attached to the deployment component at carefully selected points and fittings. The cables pass through overhead pulleys and terminate at adjustable counterweights. The test area must have a capability of handling a boom which extends 35 feet from the center of the spacecraft.

Safety Considerations--The low-gain and VHF antenna booms require protection since they serve as wave guides or elements of rigid coaxial line. Surface damage impairs their efficiency as conductors. The booms must also be protected from condensate forming inside.

4.4.1.3 High Gain Antenna and Scan Platform Drive

Two electro-mechanical rotary drive units are used on both the high-gain antenna and scan platform pointing assemblies.

Equipment Identification and Usage--This equipment is necessary to functionally test the drive units before installation in the next higher assembly.

Design Concepts, Requirements, and Constraints--A pulse generator will be used to drive the pointing mechanisms while torque and position measurements are made on the units. A single test set will be utilized to test both high-gain antenna and scan platform drive units.

Functional Description--The equipment will measure the torque at the output shaft when specified power is applied to the drive unit. It also allows the drive unit to demonstrate a certain holding capability when power is removed and torque is applied in either direction. Absolute position readout is provided to ensure that the transducer in the drive unit is functioning properly.

Performance Parameters--The pulse generator must be capable of delivering 25 pulses of DC power at a level of 50 watts in pulse widths of 50 milliseconds. Torquemeter must have range of 0 to 15 foot-pounds. The position indicator will be capable of absolute readout from a 10-bit incremental transducer.

Physical Characteristics and Constraints--The approximate size of the test unit is 8"x8"x6". The unit operates from standard 110 VAC supply.

4.4.2 Pyrotechnic Subsystem Operational Support Equipment

4.4.2.1 Equipment Identification and Intended Usage

This section defines the pyrotechnic subsystem operational support equipment, which includes an ordnance circuit test set and auxiliary equipment.

4.4.2.2 Design Concepts, Requirements and Constraints

A test set similar to the existing minuteman ordnance circuit test set is proposed. This set will operate in conjunction with the CC&S test set.

4.4.2.3 Applicable Documentation

Boeing Part No. 10-20994 Ordnance Circuit Test Set

4.4.2.4 Functional Description

Functional testing of the pyrotechnic subsystem is accomplished in conjunction with the CC&S functional testing using the CC&S operational support equipment. The test set will determine that the pyrotechnic device firing leads are free from extraneous current immediately prior to firing lead connection to the pyrotechnic device and to measure bridgewire resistance.

4.4.2.5 Interface Definition

The test set will interface with each firing lead connector to test the firing lead for extraneous (hazardous) current. It operates in a control loop with the CC&S.

The test set will interface with each pyrotechnic device to measure bridgewire resistance.

4.4.2.6 Performance Parameters

The test set will be capable of detecting extraneous (hazardous) current from DC to 15,000 cycles. Current readout will be limited to

the range of 0 to .100 amperes; at a value above .100 amperes a circuit breaker will break the circuit within the test set to protect OSE circuitry. The test set will be capable of measuring resistance up to 50 ohms with maximum current output of .005 amperes. It will be self-powered and have self-test capability.

4.4.2.7 Physical Characteristics

The test set will be enclosed in a fiberglass case, which is portable and capable of withstanding the effects of rough, field handling environments.

It requires adapter cables to mate with the connectors being tested. (It is recommended that Boeing Part Number 10-20994-10, Ordnance Circuit Test Set being supplied to the Minuteman program be used for this purpose).

4.4.2.8 Safety Considerations

Test set current output is limited to .005 amperes. All corners are rounded for safe use. Output connectors are recessed below the exterior surface. A circuit breaker will open the circuit above .10.

4.5 SPACE SCIENCE

The Space Science Payload, including its Data Automation Equipment, for the 1971 Flight Spacecraft will be supplied as GFE. These instruments perform a number of science experiments. Data Automation Equipment sequences and calibrates the science instruments, provides temporary data storage, and sequences data transmittal to the spacecraft for storage or for telemetry transmission to ground receivers. The specific scientific experiments have not been defined, but will include planetary experiments such as surface mapping and atmospheric observations, and planetary-interplanetary experiments such as magnetic field mapping, solar plasma observations, and galactic cosmic ray measurements. See Volume A, Section 4.5, for detailed typical descriptions.

Development of the various scientific experiment packages, as well as mating of these packages to the spacecraft, will require a coordinated effort to identify the various interfaces between the scientists' hardware and the Spacecraft Bus and its OSE for testing and calibrating, both prior to and after mating with the Spacecraft Bus.

The Science Payload OSE includes all checkout and special calibration equipment for the subsystem. It must be furnished by the experimenter/scientist as GFE. The Science Payload OSE will be combined with the Spacecraft Bus OSE to form a part of the System Test Complex. This will be accomplished by the spacecraft contractor at the same time that he assembles the Spacecraft Bus and the Science Payload. The spacecraft contractor will also provide pertinent design information to the Science Payload contractors and will perform OSE mating tests to assure mutual compatibility of all System Test Complex elements.

4.6 ATTITUDE REFERENCE AND AUTOPILOT OSE FUNCTIONAL REQUIREMENTS

This section describes the subsystem test set for the Attitude Reference and Autopilot Subsystems.

4.6.1 Equipment Identification and Intended Usage

The test set for the two subsystems is integrated to permit common utilization of equipment. It consists of two standard equipment packs plus three special purpose auxiliary equipments consisting of a rotary tilt table, star field simulator, and sun simulator. This tester is for use at the subsystem level only. A typical test configuration is shown in Figure 4.6-1.

4.6.2 Design Concepts Requirements and Constraints

This section defines the concepts unique to the Operational Support Equipment for the Attitude Reference and Autopilot Subsystems. The subsystem tester requirements are specifically considered along with the requirements for utilization of the selected test set modules at other levels of test in the system test complex.

The test set operation is automatically controlled from a tape program. Random access to tests and override capability are provided by manual programming. Read-out devices include a print-out of the test number, upper-lower limits measured value data, and test time. Self test features are an integral part of the test set. Self test can be initiated at any time in the program without disconnecting the unit under test. Time sharing of common usage items

COMMAND DECODER AND SEQUENCER	MEASUREMENT DEVICES
TAPE READER AND CONTROLS; MANUAL PRO-GRAMMER	
VISUAL READOUTS	STIMULUS GENERATORS
COMPARATOR	
PRINTER	INPUT SIGNAL CONDITIONERS
MAGNETIC TAPE RECORDER	OUTPUT SIGNAL CONDITIONERS
ACCESSORY DRAWER	TEST POINT SELECTOR
POWER SUPPLY	POWER SUPPLIES

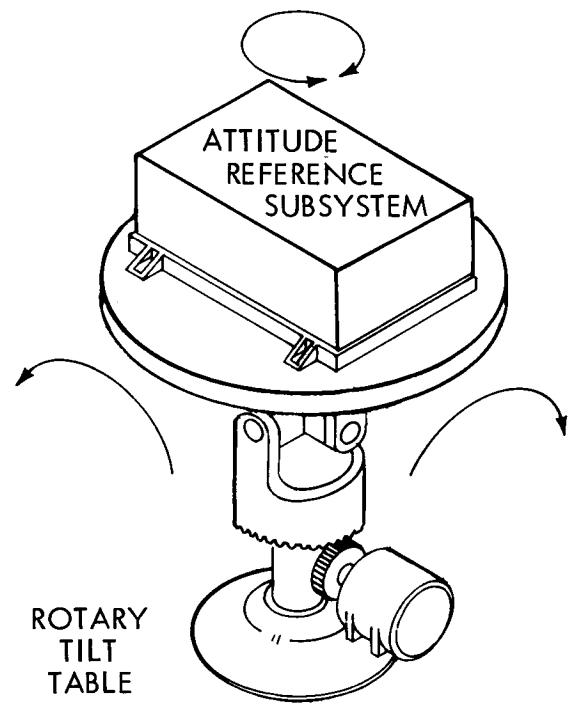

Figure 4.6-1: Typical Test Set Configuration

and measurement devices is employed.

4.6.3 Applicable Documents

Lunar Orbiter	D2-100244-1-3	Programmer Test Set
Lunar Orbiter	10-70053 Rev. C	IRU Test Set

4.6.4 Functional Description

The subsystem test set provides all input-output signals and control necessary to verify the performance of the attitude references and autopilot at the subsystem level.

The test set provides all commands to the attitude references and autopilots normally supplied by the CC&S. Appropriate loads will be used to simulate the normal interface. The optical sensors require simulated star and Sun sources. A precision rotary tilt table is required to checkout the gyros and accelerometers in the IRU.

In addition telemetry monitor points are utilized to the fullest extent. A test connector is required on the subsystem to provide access to critical points for monitoring equipment performances with the OSE.

4.6.4.1 Test List

The tests performed by the OSE on the Attitude Reference and Autopilot subsystems are:

Accelerometers

1) Output Pulse Characteristics

2) Power Variation and Transient Sensitivity

3) Scale Factor, Threshold and Resolution

4) Velocity Scale Factor, Bias and Input Axis Alignment

5) Temperature Compensation

Gyros

1) Torquing Rates

2) Torque Rate Switching

3) Gyro Servo Loop Response

4) Gyro Drift Test and Bias

5) Gyro Alignment

6) Temperature Compensation

Canopus Sensor

1) Sun Shutter Response

2) Lock-On Capability

3) Star Recognition Response

4) Field of View Sensitivity

5) Signal to Noise Ratio

6) Calibrate Star Mapping TM Output

7) Measure Roll Error Response

8) Fine Mode Output

9) Coarse Mode Output

Autopilot

1) Valve Driver Response

2) Measure Gain and Response of Jet Vane Servo Drivers

3) Measure Gain and Response of Secondary Injection Valve Drivers

4) Input Thresholds

4.6.4.2 Test Equipment Block Diagram

The Attitude Reference and Autopilot Subsystem Test Equipment requirements are derived from the summation of test requirements at all levels of test, subsystem, integrated S/C, type approval environmental, etc. The Attitude Reference and the Autopilot subsystems testers time share common programming, control and measurement devices so that one test equipment meets the test requirements of both subsystems. The block diagram presented in Figure 4.6-2 is the preliminary design for a test set which meets these combined test requirements. The functions performed within each block are briefly described.

1) The Input Signal Conditioner includes the circuits which provide isolation between the spacecraft and the test equipment. These circuits protect the spacecraft from faults occurring within the test equipment and prevent source loading. These circuits must present the same interface characteristics as the mating S/C subsystems.

2) Output Signal Isolation provides protection to spacecraft components and the correct output interface characteristics. This block also includes provisions for modifying the interface signals to the limiting value or submarginal values.

3) The Test Point Selection Matrix provides the input and output switching required to perform the various test services. Test

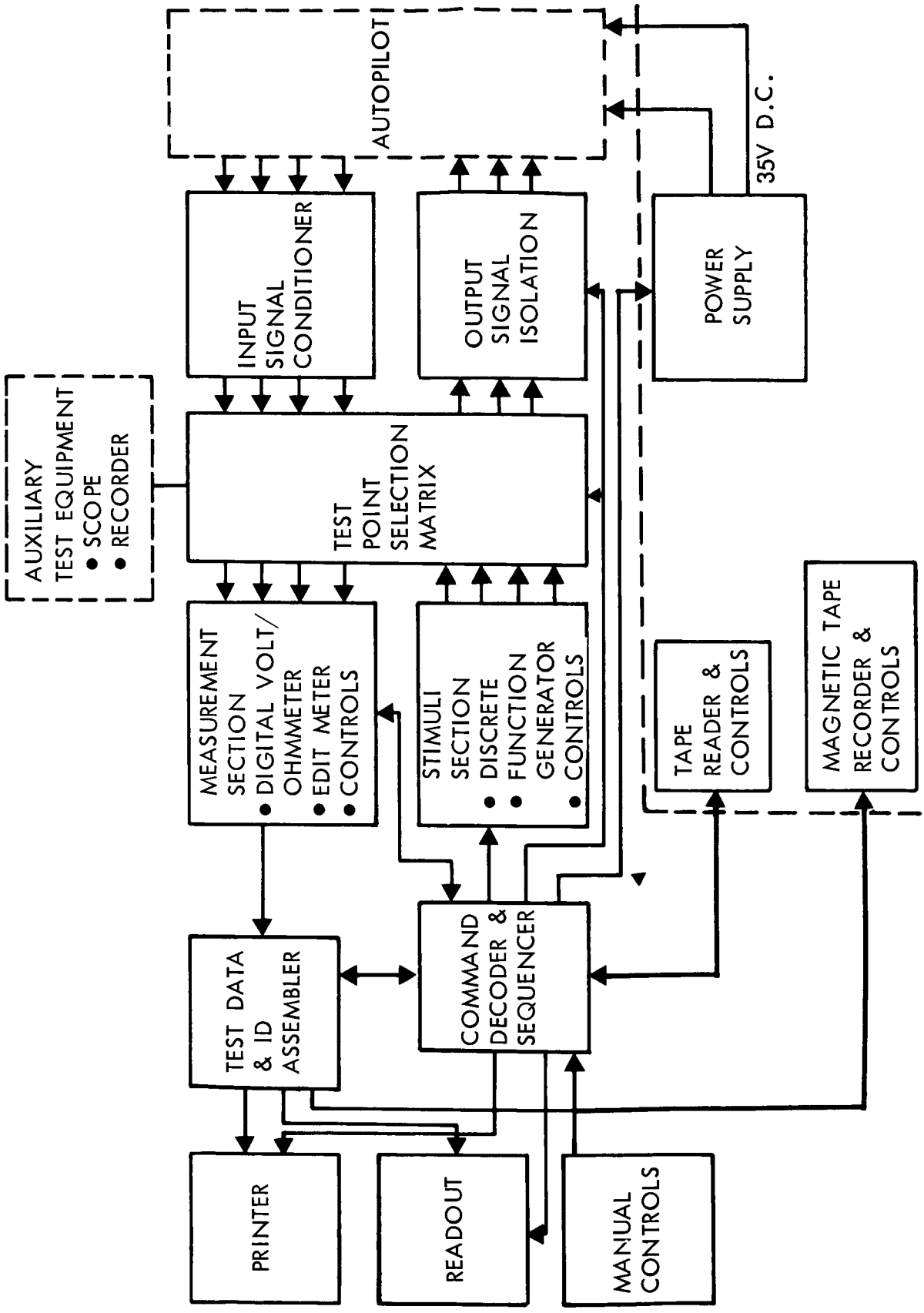

Figure 4.6-2: Autopilot and Attitude Reference OSE Functional Block Diagram

point inputs are switched either to the measurement section or to auxiliary test equipment such as oscilloscopes, recorders, high precision meters, etc. for manual operations.

4) The Measurement Section includes a digital volt-ohmeter, an Eput meter, an Up-Down counter and control circuitry. The Up-Down counter is a 5 - or 6 - bit register which counts bias pulses. Provisions to read out contents in BCD on command is included. Controls to initiate conversion, signal end of conversion, and gate outputs are included.

5) The Stimuli Section contains the circuits required to stimulate various subsystem functions. These include various discrete stimuli, a sine wave function generator, and the controls required to initiate, terminate, and select parameters, and to gate outputs.

6) The Test Data and I. D. Assembler assembles the measurement data and the various identification data into a format suitable for entry into an IBM data processing system. The assembler provides the temporary storage and the controls required to fill, read out and clear the register. The identification data is entered from the tape program and/or the manual data entry on the control panel. The GO/NO-GO comparator is another function of this block. The test value is compared with high and low limits, provided from tape program and the decision displayed to the operator.

7) The Printer provides hard copy data for on-the-spot evaluation and data package records.

8) Read Out functions are included in the manual control panel to display the test value, test number, GO, NO-GO, self-test results,etc.

9) The Manual Controls include all the controls required for the operator to initiate, stop, or override any of the test sequences.

10) The Command Decoder and Sequencer receives test command and test data from the tape reader. The test commands are decoded into discretes which are routed to the appropriate functional block for execution. Test data such as test limits and test ID number are routed to the test data assembler. The sequencing and control logic required to verify that test sequences are completed, advance the program to next sequence, perform self-check sequences, etc. are included in this function. This includes the capability of slewing the tape to any designated test sequence on command or automatically as result of test NO-GO.

11) The Tape Reader and Controls block includes an 8-level punched tape photoelectric reader, and circuits necessary to control the drive mechanism.

12) The Magnetic Tape Recorder and Controls record the test values and identification in format suitable for input into an automatic data processing system. The controls required to start, stop and control the recorder in response to commands from the Command Decoder and Sequencer are included.

13) The Power Supply supplies 35 vdc power and reference frequencies to the unit under test.

4.6.5 Signal Interface List

The complete attitude reference and autopilot subsystem electrical

interface is described in the Interface List, Table 4.6.1-II of Volume A. This list tabulates all inputs and outputs for both packages, their signal characteristics and their intended use. The signal characteristics include type, logic levels, frequency, etc. The usage listing designates whether the signal is used in the functional interface, the OSE test connecter, the telemetry output or a combination of these.

4.6.6 Performance Parameters

Test of the attitude reference and autopilot subsystem performance requires the application of electrical and mechanical stimuli and measurement of equipment parameters.

The autopilot performance parameters are measured in terms of electrical quantities such as voltage, current, frequency, phase, period, and power. These quantities require only standard and commonly available measurement accuracies and range.

The attitude reference performance tests require special consideration in terms of mechanical and optical alinement and positioning. The test of the IRU (gyros and accelerometers) require that they be subjected to rotation in their axes at rates varying from 0.05 to 4.0 degrees/sec. The IRU also requires positioning with a repeatability of 10 $\widehat{\text{sec}}$.

4.6.7 Physical Characteristics and Constraints

The equipment will be installed in standard 6 ft. racks. Auxilary equipment as shown below will be external.

4.6.7.1 Star Simulator

The Canopus Sensors require a simulated star capable of variable intensity and calibration over a wide field of view for functional testing. International Telephone and Telegraph Co. has developed a star sensor optical test fixture on another program which appears to be well suited for this use. Its weight and design are such that it can be adapted to mount directly on the Attitude Reference package, both separately and when assembled in the spacecraft.

The design positions the field-of-view test points on a spherical segment concentric with the first nodal point of the Star Tracker objective lens. A single collimated and variable "point source" is provided, consisting of a photographic lens with a small hole at the focal point, rear-lighted by an incandescent lamp. The point source is capable of filling the tracker's entrance pupil with radiation closely simulating that of Canopus, with the radiation appearing to emanate from an infinitely-distant point source locatable within 0.001° of any desired location within the Star Tracker's field of view. The intensity of the source will be variable, at will, between 1/10 and 5 times the intensity of Canopus, the assembly will exclude all extraneous illumination.

4.6.7.2 Rate Table--A tilting rotary rate table will be required to test the attitude control package inertial instruments. The rate required will be 0.05 degree/sec to 4.0 degree/ sec. The whole table and stand will have to be aligned with a 10 $\widehat{\text{sec}}$ accuracy with a positioned accuracy of the head of 30 $\widehat{\text{sec}}$.

To obtain a nearly frictionless mounting platform, a hydrodynamic bearing is required for the rate table. The Davidson Model No. D500-103 Hydrodynamic Balance (HDE) meets all the requirements and is presently being used at Autonetics for similar tests.

4.6.7.3 Sun Simulator

A sun source will be simulated by a diffusion screen and collimated light source.

4.6.7.4 Assembly, Handling and Shipping Equipment (AHSE) Requirements

The Attitude Reference and Autopilot Subsystem required no special assembly fixtures, jigs or tools for assembly into the S/C at Boeing STC or AFETR.

The Attitude Reference and Autopilot Subsystem requires no special handling equipment for mounting or transportation.

Shipping containers for each component will be designed, fabricated and tested in accordance with applicable specifications.

4.6.8 Safety Considerations

The test set design will include normal circuit safety precautions. It will also be designed to prevent any hazard to the tested equipment.

4.6.9 Test

The equipment is designed for self test. A self test tape provides

the programming for checking all functions of the test set. This program permits a functional check of the equipment during acceptance and qualification tests. The self test can be conducted during a subsystem test without disconnecting the unit under test. A simulator of the subsystem is used to verify interfaces in the test set prior to utilization with the S/C equipment. Subsystem protection, in case of test set malfunction, will be verified. Environmental conditions will be laboratory ambient.

4.7 CENTRAL COMPUTER AND SEQUENCER OSE

4.7.1 Equipment Identification and Intended Usage

The Central Computer and Sequencer (CC&S) Operational Support Equipment (OSE) provides for a complete checkout monitoring of the CC&S subsystem.

The OSE consists of the following equipment:

- Control Panel
- Power Panel
- Data Control Unit
- Tape Reader
- Message Accumulating Register and Preamble Generator
- Stimuli
- Simulated Load
- Output Comparator
- Display and Output Scanner
- Event Recorder
- Test Set Memory
- Commercial Test Equipment (i.e. Oscilliscope, frequency function generator, etc.)

A system block diagram of the OSE is shown in Figure 4.7-1. Table 4.7-1 lists the OSE and areas of intended usage.

A description of the equipment design and its operation is included in the following paragraphs.

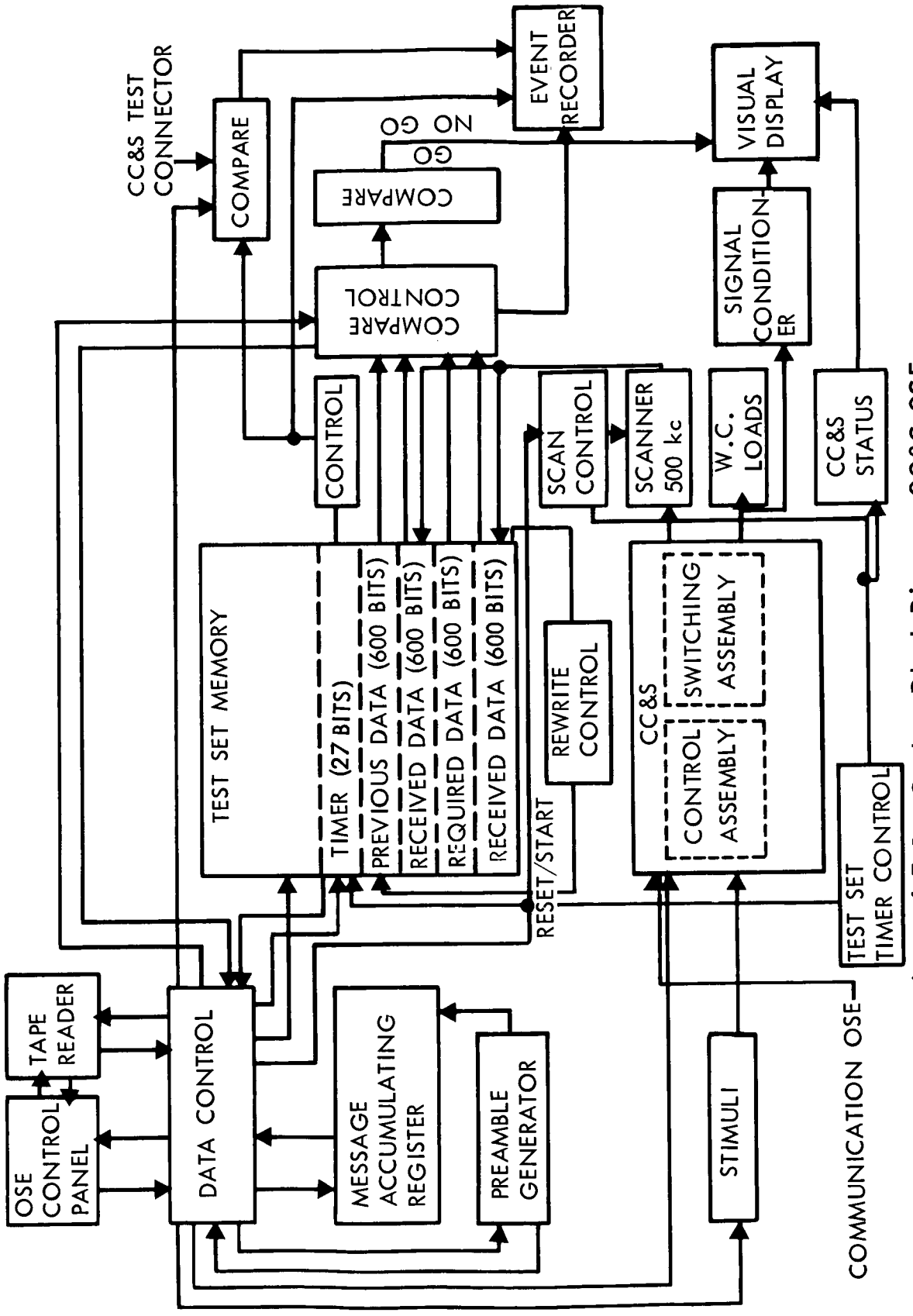

Figure 4.7-1: System Block Diagram CC&S OSE

Table 4.7-1 EQUIPMENT IDENTIFICATION AND INTENDED USAGE

CC&S OSE:	USAGE: (SSTE) Subsystem Test Equipment	(STC) System Test Complex	(LCE) Launch Complex Equipment	(AHSE) Assembly Handling & Shipping Equipment
SSTE Items (1-11)	X			
SSTE Items (2,6,7,9, & 11 Only)		X		
SSTE Items (9 & 11 Only)			X	
Oscilloscope	X	X		
Multimeter	X	X		
AC-DC Differential VM	X	X		
Function Generator	X	X		
Counter	X	X		
Test Article Mounting Fixture	X			
Test Connector Cables	X	X		
Breakout Boxes		X		
Transportation Container for Switching & Control Assemblies				X

4.7.2 Design Concept

The design approach for this test equipment reflects certain concepts and considerations used in the Mariner C, CC&S as specified in JPL document OSE/MC-4-210A and the Lunar Orbiter Programmer as specified in Boeing document D2-100244-3.

4.7.3 Applicable Documents

	The Boeing Company
Boeing Document D2-100244-1	Programmer Test Set Design Specification, dated February 3, 1965 (Lunar Orbiter)
Boeing Document D2-100244-3	Programmmer Test Set Operation and Maintenance, dated May 19, 1965 (Lunar Orbiter)

4.7.4 Functional Description

A functional description of the OSE required for the CC&S plus a discussion of the testing to be conducted is covered in the following paragraphs.

4.7.4.1 Design of Subsystem Test Equipment

A block diagram of the CC&S OSE is shown in Figure 4.7-1. A test equipment configuration is shown in Figure 4.7-2 and is standard type rack-mounted equipment. The system includes the following equipment:

1) OSE Control Panel -- This equipment (shown in Figure 4.7-3 provides control for the OSE equipment during the entire subsystem testing. It provides control for both manual and automatic modes. One specific function of the control panel is to provide the test operator with manual control for selection, transmission and display of

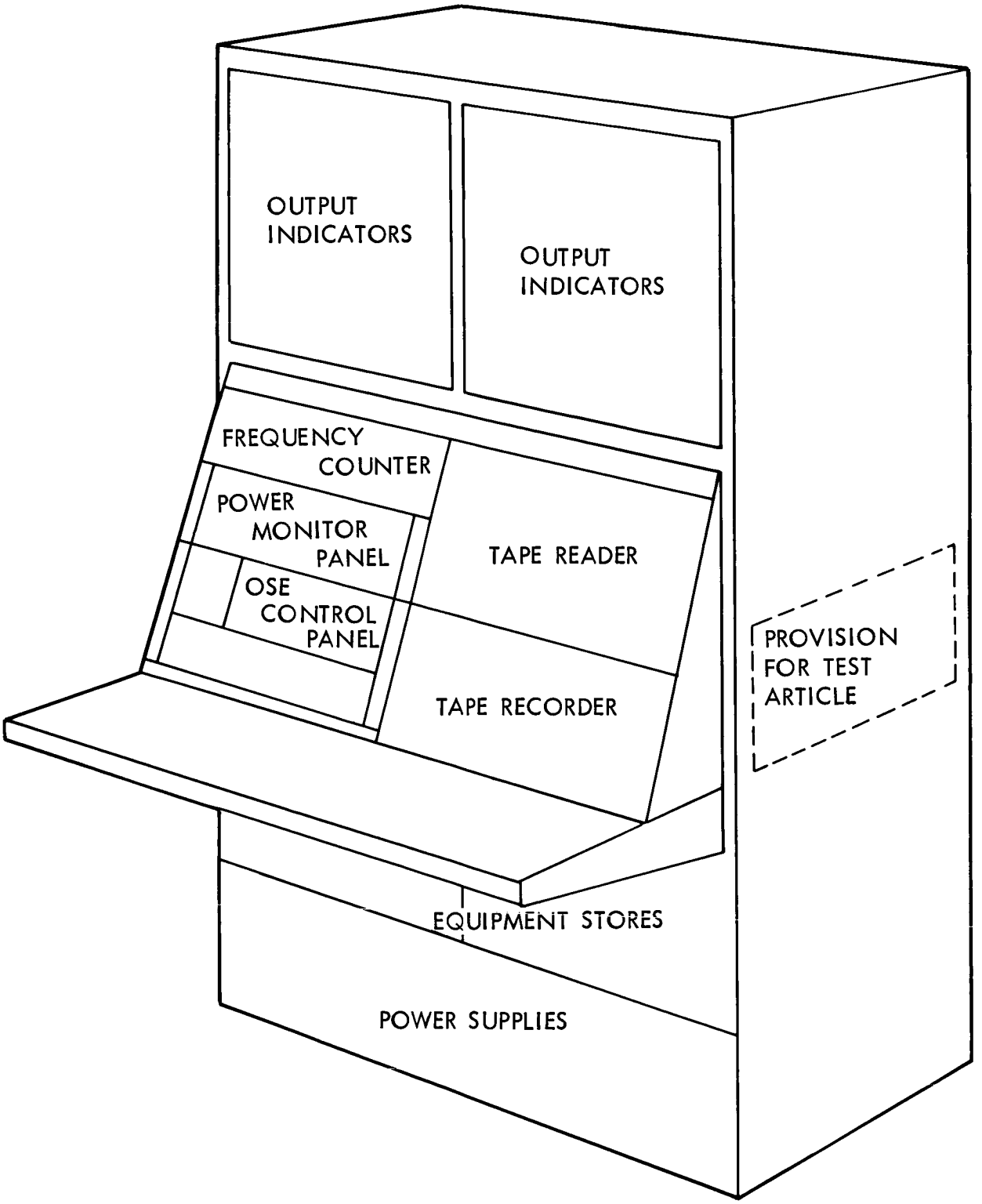

Figure 4.7-2: CC&S SSTE CONFIGURATION

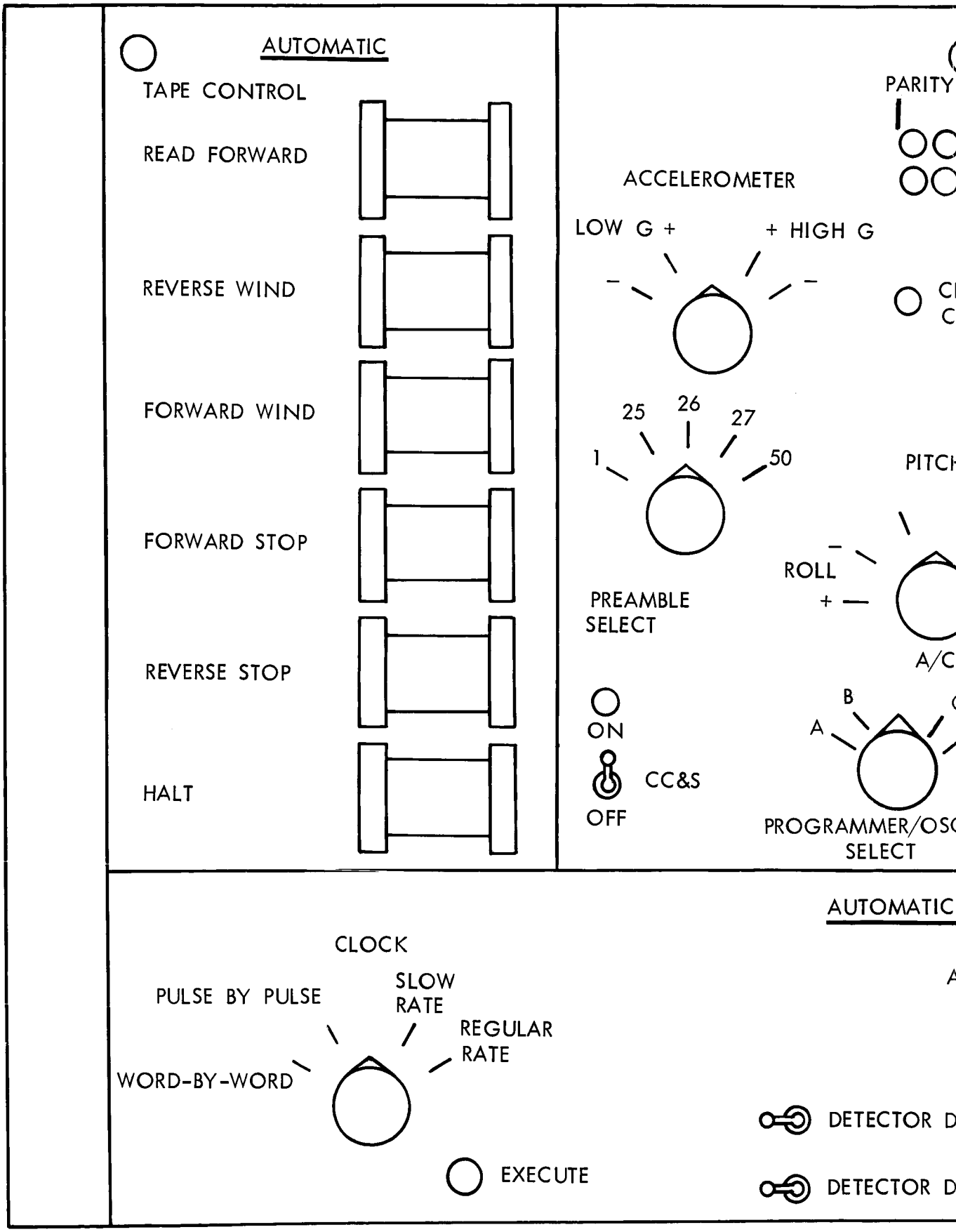
AUTOMATIC
TAPE CONTROL
READ FORWARD
REVERSE WIND
FORWARD WIND
FORWARD STOP
REVERSE STOP
HALT
PARITY
ACCELEROMETER
LOW G +
+ HIGH G
25
26
27
1
50
PREAMBLE SELECT
PITCH
ROLL
A/C
ON
CC&S
OFF
A
B
PROGRAMMER/OSC SELECT
AUTOMATIC
CLOCK
PULSE BY PULSE
SLOW RATE
REGULAR RATE
WORD-BY-WORD
EXECUTE
DETECTOR D
DETECTOR D

137(1)

MANUAL

OPERATION CODE

MAGNITUDE OR FUNCTI

.EAR INPUT
OMMAND

TRANSFER
TO CC&S

CC&S

YAW

1 2

RESET

D

A

MODE

B

PARITY OVERRIDE

CILLATOR

AND MANUAL

M

EXECUTE DEMODULATOR

ATA A

SWITCHOVER
DEMODULATOR

ATA B

CLOCK INHIBIT

137 (2)

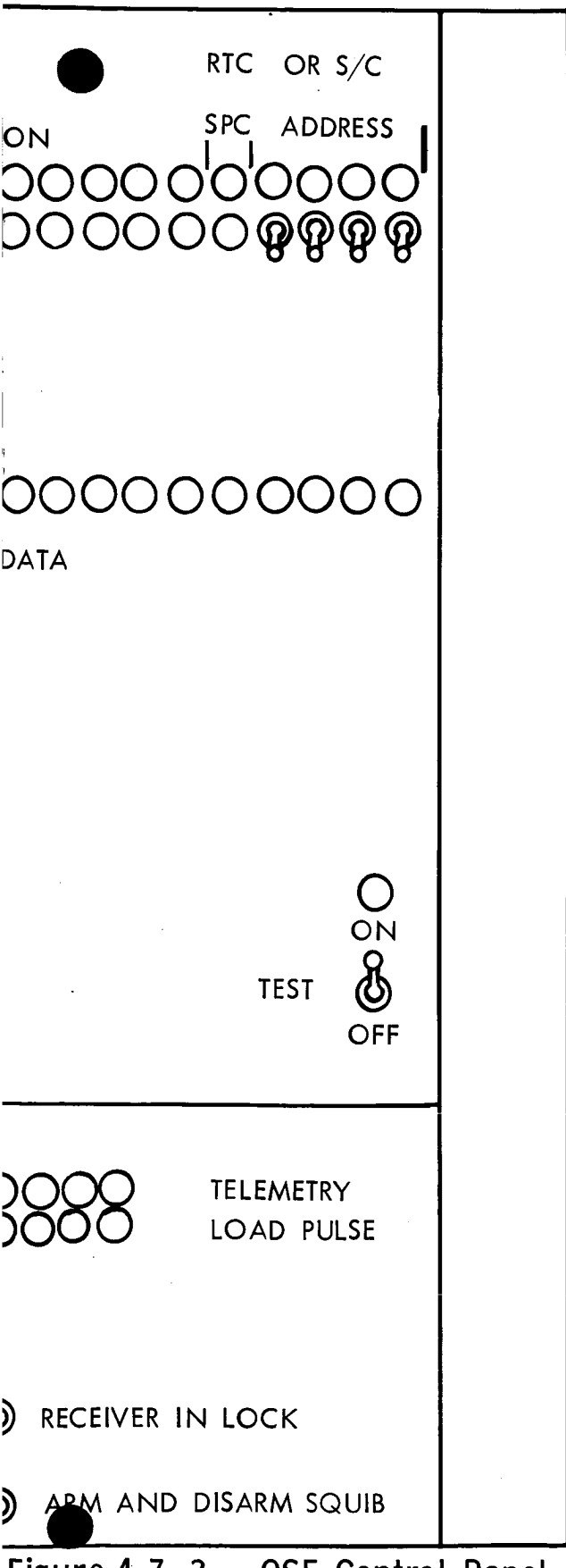

Figure 4.7–3: OSE Control Panel

command words. The Lunar Orbiter word processor panel, Figure 4.7-4 provides a similar capability to the control panel required for the CC&S OSE.

2) Power Panel -- This panel is used to control and monitor all power to OSE equipment and the CC&S during subsystem testing. Meters, selector switches, indicators, and test connectors are provided for monitoring the power sources.

3) Data Control Unit -- The data control unit controls the progress of the test, instructs the tape reader, decodes information from the tape, routes decoded data to appropriate control functions within the test set, and in the sequences of the test set. In addition this unit formats command words, controls the event recorder, provides system timing, and synchronization.

4) Tape Reader -- The tape reader uses prepared tapes for programming the OSE during CC&S subassembly testing. Test procedures stored on the tape are read and converted to electrical signals. Sequencing of the tape motion and the resulting output information is controlled by the data control unit.

5) Message Accumulating Register and the Preamble Generator -- This equipment will simulate the command detector output by generating and transmitting any command word to the CC&S for all test programs.

6) Stimuli -- This portion of the OSE equipment simulates all inputs to the CC&S received from the spacecraft subsystems. It also simulates all CC&S outputs that interface with the spacecraft subsystems. Stimuli required are shown in Table 4.7-2. The OSE stimuli generator currently being used to checkout the Lunar Orbiter Programmer and the

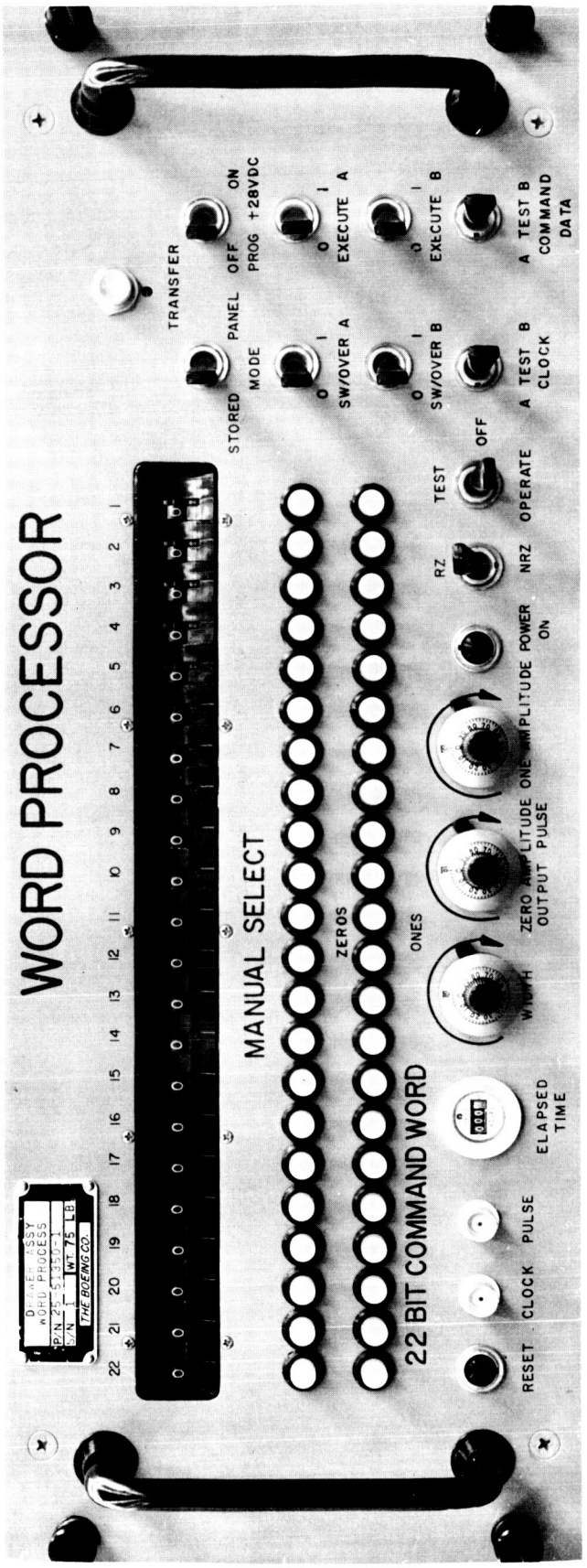

Figure 4.7-4: Lunar Orbiter Control Panel

Table 4.7-2 STIMULI REQUIRED TO TEST THE CC&S

FUNCTION	STIMULI REQUIRED
Canopus Present	Digital level to simulate the output of the star tracker Canopus.
Sun Present	Analog, adjustable to simulate the solar panel output voltage.
Roll Gyro	Digital pulses on two lines. The sum of the pulses on both lines is 5 kc.
Pitch Gyro	Digital pulses on two lines. The sum of the pulses on both lines is 5 kc.
Yaw Gyro	Digital pulses on two lines. The sum of the pulses on both lines is 5 kc.
High-g Accelerometer	Digital pulses approximately 1 kc.
Low-g Accelerometer	Digital pulses approximately 1 kc.
High-Level Signals	Squib, solenoid, and relay drivers.
Low-Level Signals	10K at 1000 micro-micro farads output impedance.

Refer to D2-82709-1, Paragraph 4.8.4 for detailed information on CC&S stimuli.

Attitude Control System is shown in Figure 4.7-5. The generator can issue 120 discrete and 40 analog signals in addition to supplying indicators for programmer telemetry data.

7) Simulated Load -- This equipment provides simulated worse case loads for the CC&S and interfacing subsystems.

8) Output Comparator -- The output comparator is used during the automatic mode of the test to insure that the outputs from the CC&S are correct.

9) Display and Output Scanner -- This equipment scans all the CC&S inputs and outputs and stores this data in the test set memory. It also provides control for a display of the CC&S and OSE operational and test status.

10) Event Recorder -- The event recorder records all changes in the output when testing either the switching assembly or the control assembly and will record time, channel identification, and signal characteristics.

11) Test Set Memory -- The OSE magnetic core memory will supply storage for the status of the CC&S and OSE. Status keeping is provided from scan to scan, keeping track of what the signal values were on the previous scan and cycling this information for comparison with new scan data.

12) Commercial Test Equipment -- Off the shelf commercial measuring and test equipment is part of the OSE. This equipment includes an AC-DC differential voltmeter, a counter, frequency function generator, oscilloscope and multimeter. Adaptors, plug-ins, test leads and auxiliary equipment is provided.

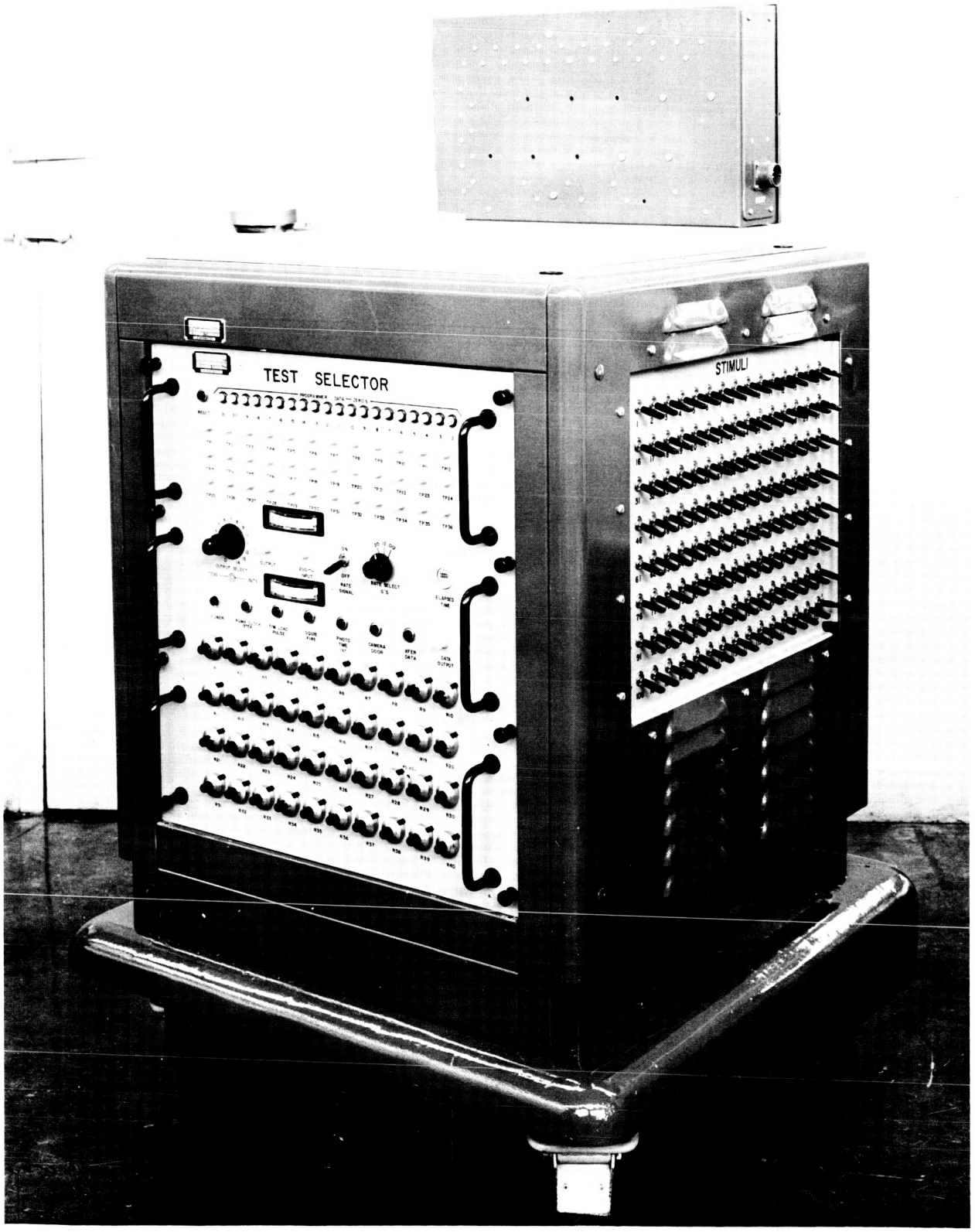

Figure 4.7-5: Lunar Orbiter Stimuli Generator

4.7.4.2 Operation of Subsystem Test Equipment

The control assembly and the switching assembly can be tested separately or together. See Figure 4.7-1. The test set is normally operated in the automatic mode utilizing a paper tape for controlling the inputs. When trouble shooting is required, the OSE can be operated manually. The first items to be tested in either the automatic or manual mode will be the CC&S power supplies and oscillators.

Automatic Mode (control assembly or complete CC&S) -- The first automatic mode test consists of testing the CC&S by real time control. The entire test procedure is stored on the tape; it includes commands, stimuli switching, and outputs required. All information is read from the tape by the tape reader and transferred into the data control. If the information is a command, it is transferred to the message-accumulating register. When the accumulating register has been filled with 23 bits, it automatically formats the command with the proper 4 bits of spacecraft address. A signal is then sent to the preamble generator which will send a selected number of zeroes to the CC&S followed by the command. If the number of zeroes in the preamble is equal to or greater than 26, the following command will be accepted by the CC&S.

Other information contained on the tape determines the stimuli to switch ON or OFF, as the test proceeds.

While the CC&S is processing the input data, the required CC&S data are read from the tape and placed in the test set memory. When the outputs

of the CC&S are ready (indicated by a signal from the test connector) they are scanned and read into two locations in the test set memory. The received, scanned output data is then shifted out of the test set memory serially and compared with the last previously received, scanned output data. The changed data outputs are recorded. After this comparison is completed, the changed output data are compared serially with the required CC&S output data and if they compare a GO is issued and the next message is read from the tape. If a NO-GO is issued, the test set will halt, and a NO-GO indication will appear on the control panel. The operator then switches the OSE to the manual mode for trouble shooting.

A second automatic mode test utilizes a CC&S stored program. A program is loaded into the CC&S memory and verified. The CC&S outputs are scanned every 100 milliseconds and loaded into the OSE test set memory. The received data are then compared with the required and previous outputs and as before, any changes from the previous output are recorded. The test set timer and the CC&S timer are also compared and if they agree, the time is recorded after each event. If no agreement occurs, the test is halted and the OSE is switched to the manual mode for trouble shooting.

A third automatic mode test is a combination of the previous two tests and is used to test real time override of the CC&S. The same general procedures are followed.

Automatic Mode (Switching Assembly) -- To perform this test requires only stimuli input signals. The output is scanned and verified in the same manner as above.

The functional flow diagram describing the automatic test modes is shown in Figure 4.7-6.

Manual Mode -- This mode of operation is used mainly for trouble shooting. Another use for the manual tests will be to evaluate what happens when the CC&S is subjected to abnormal conditions such as when failures occur within spacecraft subsystems. Another useful feature of the manual mode is the investigation failure mode programming. (Failures can be simulated and evaluated prior to and during mission operations utilizing spare flight equipment).

If a NO-GO occurs during the automatic test, the tester will stop and the output status of the CC&S will be displayed. If the operator wishes to know what has taken place just prior to the NO-GO, the tape can be rerun and stopped. The program can then be manual stepped (word by word or pulse by pulse) through the remaining part of the program.

4.7.4.3 Reliability

To ensure a reliable CC&S OSE without excessive cost, the commercial equivalent of spacecraft parts will be used. Where required, the circuits used will be identical to those used within the spacecraft or the Lunar Orbiter Programmer Test Set (see Boeing Document D2-10244-1).

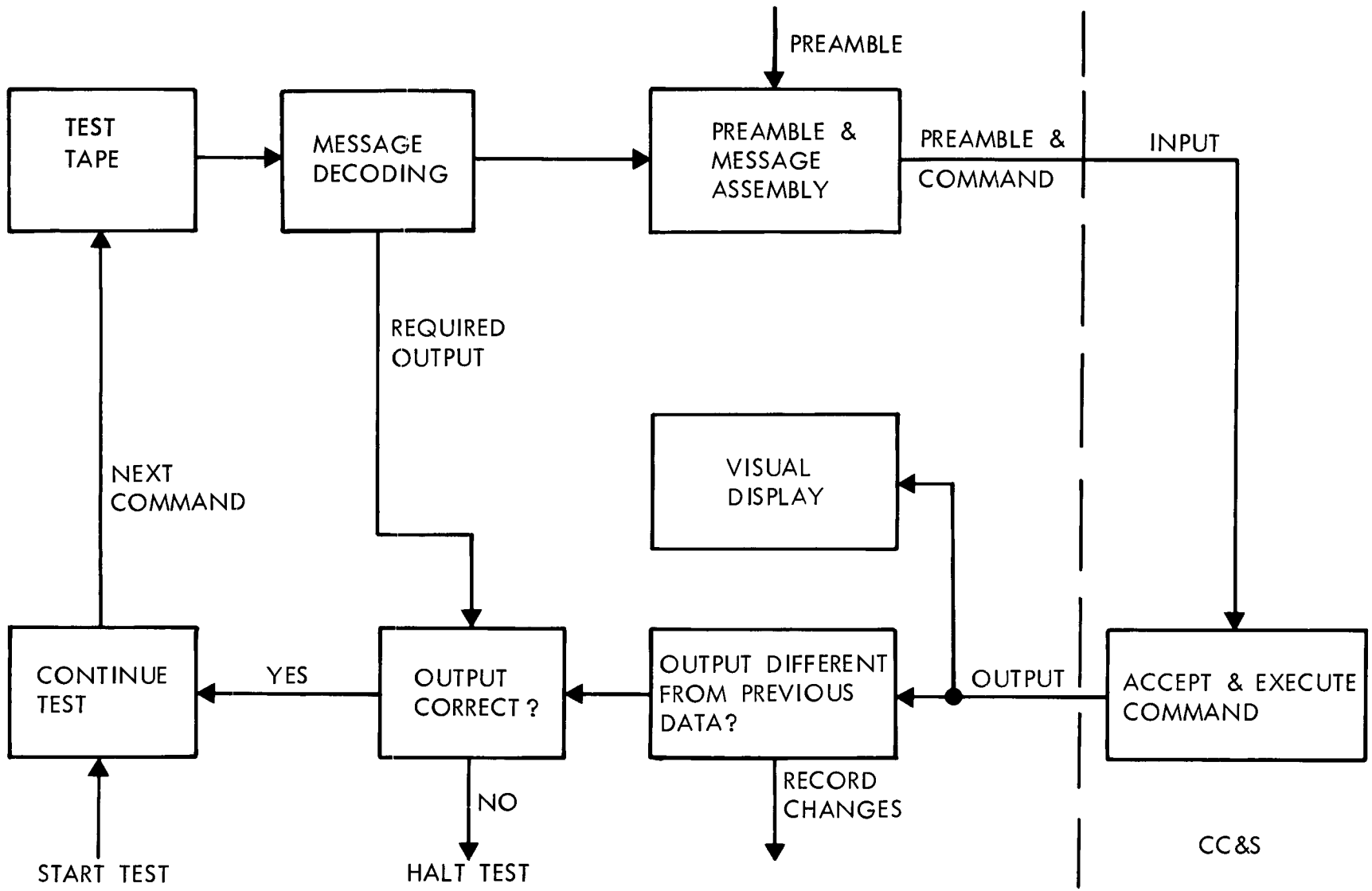

Figure 4.7-6: Automatic Test Mode CC&S OSE

All remaining circuits will be worse case designed with special attention given to ensure "fail safe" conditions where required.

4.7.4.4 Development Status

Most of the circuits proposed for the CC&S OSE have been designed and tested on the Lunar Orbiter Program. Maximum utilization of design and development experience gained on the Mariner C and Lunar Orbiter Program will be incorporated in the design of the CC&S OSE.

4.7.5 Interface Definitions

Interface between the CC&S and its OSE consists of the CC&S input/output and test connector and the OSE connectors.

4.7.6 Performance Parameters

The major performance parameters are given below:

1) Verify a timing accuracy of 1 part in 10^6 over a 16-hour period.
2) Evaluate and record any changes on a total of approximately 600 CC&S input/outputs with a maximum of 20 changes per 100 milliseconds.
3) Provide up to 2000 27-bit command words and up to 5 words per second in CC&S.
4) Provide 370 simulated stimuli and loads representing inputs from other subsystems and the CC&S.
5) Storage capacity - 2048 bits.

4.7.7 Physical Characteristics and Constraints

Subsystem Test Equipment -- This equipment will be contained in two standard six-foot racks (Figure 4.7-2). Panels that are not part of the

commercial purchased equipment will be of standard 19 inch dimensions. All equipment items will be designed and arranged to maximum usefulness and safety to the personnel using it. All cabling will follow good engineering practices (see section 2.2.1.11).

4.7.8 Safety Considerations

The OSE will incorporate fail safe interface circuits so that failure in the OSE during test will not damage other equipment items. Pryotechnics and valve control circuitry in the CC&S will be returned to the safe condition upon completion of OSE testing. Critical circuits in the OSE will be made redundant.

4.7.9 Tests

Compatibility between the OSE and the CC&S will be established at the subsystem level prior to and after delivery of the test set, the OSE will be capable of self test at any time.

ERRATA

The Boeing Company Document No. D2-82709-3, Voyager Spacecraft System Final Technical Report

VOLUME C

"Design for Operational Support Equipment"

Page No.	Paragraph, Table, or Figure No.	
		Section 1.0
1-2		Launch Complex Equipment (LCE)--...
		The second sentence which reads:
		"The LCE does not, however, include assembly, handling, and shipping... ."
		should be revised to read:
		"The LCE does not, however, include all assembly, handling, and shipping... ."
		System Test Complex (STC)--...
		The first sentence which reads:
		"The STC houses the equipment for testing the Planetary Vehicle, with or without the Spacecraft Science Payload, and Flight Capsule from initial assembly... ."
		should be revised to read:
		"The STC houses the equipment for testing the Planetary Vehicle, with or without the Spacecraft Science Payload and Flight Capsule, from initial assembly... ."

ERRATA (Continued)

VOLUME C

Page No.	Paragraph, Table, or Figure No.	
		Section 2.0
2-7	Figure 2-2	VOYAGER PROOF TEST MODEL FLOW 1) At the juncture of column 6 "Vibration Test" and the row designated "Mechanical Subsystem" the term "extended" should be changed to "folded/extended." 2) The objective under column 15 "ETR Interface Tests" which reads: "Verify compatibility of spacecraft with DSIF, MOS, and Launch Vehicle" should be revised to read: "Verify compatibility of spacecraft with DSIF, MOS, LCE and Launch Vehicle."
		Section 3.0
3-2	Para. 3.1	MISSION DEPENDENT EQUIPMENT Delete the last sentence which reads: "For the operations concept of this equipment, broken down to hardware and software at the DSIF and SFOF, see Section 2.4.1.1."

ERRATA (Continued)

VOLUME C

Page No.	Paragraph, Table, or Figure No.	
3-2	Para. 3.1.1	Functional Description The first sentence in the first paragraph which reads: "The following discussion describes the hardware and software...must be provided for--at most--two spacecraft and one capsule." should be revised to read: "The following discussion describes the hardware and software...must be provided for--at most--two spacecraft and two capsules."
3-57	Figure 3.2-2	VOYAGER OSE/LCE LAUNCH-PAD OPERATIONS On the schematic of the space vehicle shown at the left on the figure, add a shroud antenna opposite the coupler which appears above the legend "To AFETR VHF Facilities" Delete the antenna symbol illustrated internal to the Centaur shroud and continue the transmission line from the interface coupling to the added shroud antenna.