NASA CR 71484

February 7, 1966

VOYAGER

N66-21076

(ACCESSION NUMBER)	(THRU)
194	1
(PAGES)	(CODE)
CR 71484	31
(NASA CR OR TMX OR AD NUMBER)	(CATEGORY)

FACILITY FORM 602

GPO PRICE $ _____

CFSTI PRICE(S) $ _____

Hard copy (HC) 5.00

Microfiche (MF) 1.25

ff 653 July 65

PHASE IA, TASK B

ORAL PRESENTATION TO JET PROPULSION LABORATORY

GENERAL ELECTRIC

MISSILE AND SPACE DIVISION

NASA Contract NAS-7-100

VOYAGER SPACECRAFT SYSTEM

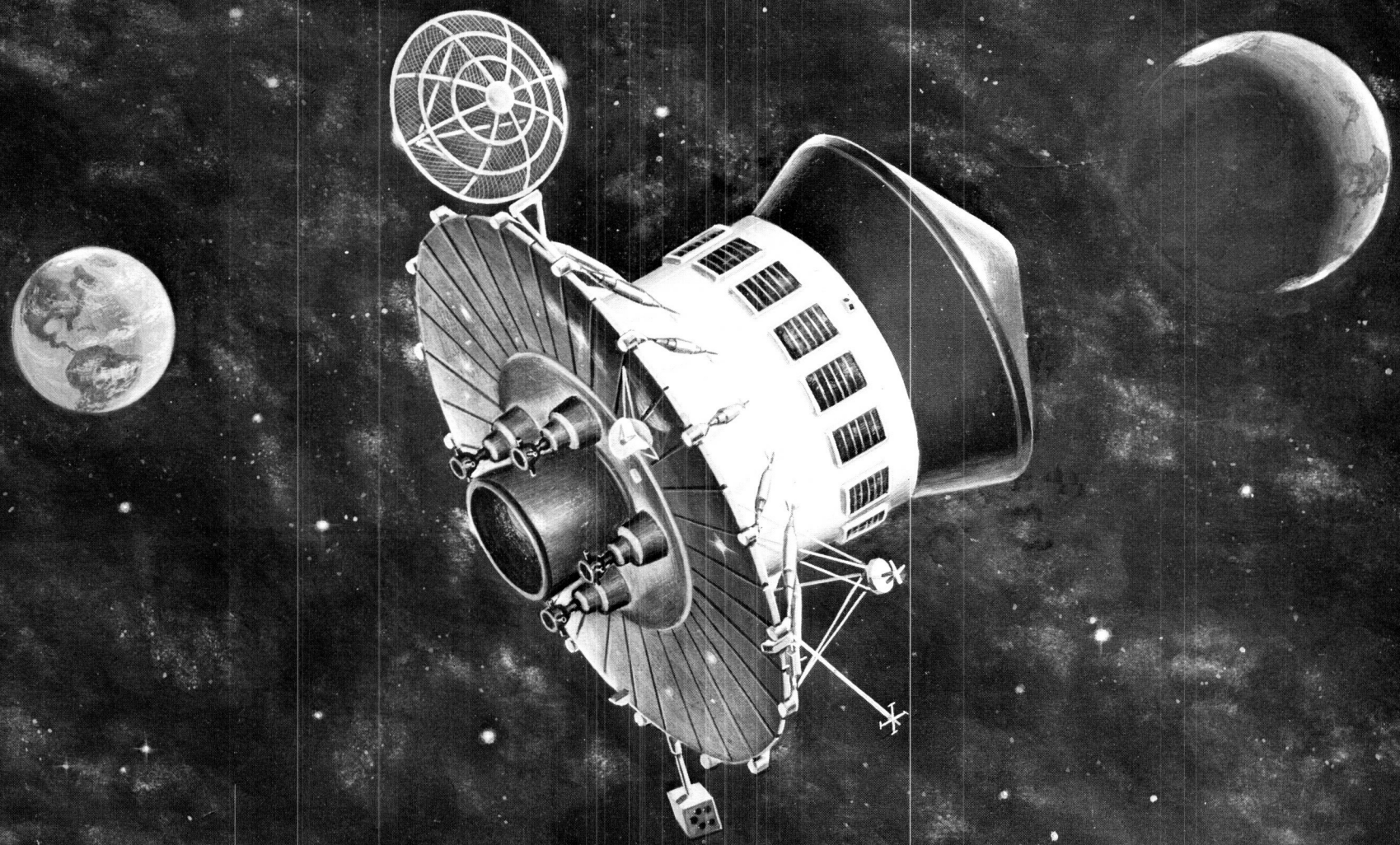

PHASE 1A, TASK B ORAL PRESENTATION

FEB. 7, 1966

GENERAL ELECTRIC

MISSILE AND SPACE DIVISION

VOYAGER PROJECT

GENERAL ELECTRIC
CORPORATE EXECUTIVE
OFFICE

MISSILE & SPACE DIVISION
H. W. PAIGE
VICE PRESIDENT &
DIVISION GENERAL MANAGER

- APOLLO SUPPORT DEPT.
- RE-ENTRY SYSTEMS DEPT.
- OTHER DEPTS.

[redacted]

- DIVISION STAFF FUNCTIONS
- SPACE SCIENCES LAB

VOYAGER PROJECT

GENERAL ELECTRIC
CORPORATE EXECUTIVE
OFFICE

MISSILE & SPACE DIVISION
H. W. PAIGE
VICE PRESIDENT &
DIVISION GENERAL MANAGER

- APOLLO SUPPORT DEPT.
- RE-ENTRY SYSTEMS DEPT.
- OTHER DEPTS.

VOYAGER SPACECRAFT SYSTEM DEPARTMENT
B. H. CALDWELL
PROJECT MANAGER

F. W. CRIMP
DEPUTY PROJECT MANAGER

- DIVISION STAFF FUNCTIONS
- SPACE SCIENCES LAB

VOYAGER EFFORT-GE TEAM

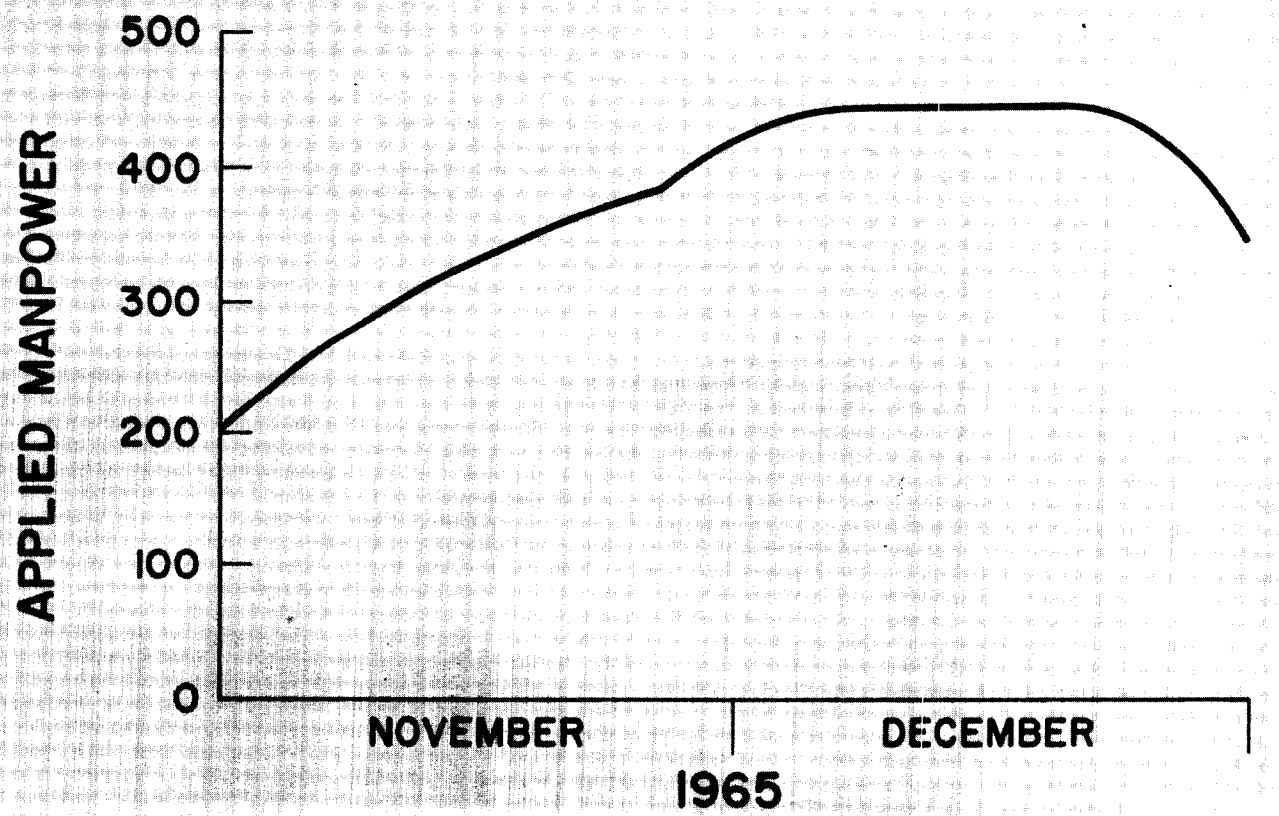

GE VOYAGER TEAM

GE MISSILE AND SPACE DIVISION

LIGHT MILITARY ELECTRONICS DEPT.	AEROJET-GENERAL	ROCKETDYNE
MALTA TEST STATION	BELL AEROSYSTEMS	ROCKET RESEARCH
MILITARY COMMUNICATIONS DEPT.	HONEYWELL	RYAN AERONAUTICAL
RESEARCH AND DEVELOPMENT CTR.	MARQUARDT	THIOKOL
	MARTIN	TRW-PROPULSION

PRESENTATION OUTLINE

- PROPULSION & CONFIGURATION SELECTION
- TRAJECTORY & ORBIT SELECTION
- AUTOMATIC SPACECRAFT
- TELECOMMUNICATIONS
- OSE
- OTHER SELECTED PROBLEMS
- PLANETARY QUARANTINE
- CONCLUSION & DISCUSSION

PROPULSION AND CONFIGURATION SELECTION

J. H. CHESTEK
A. D. COHEN

SPACECRAFT ENVELOPE

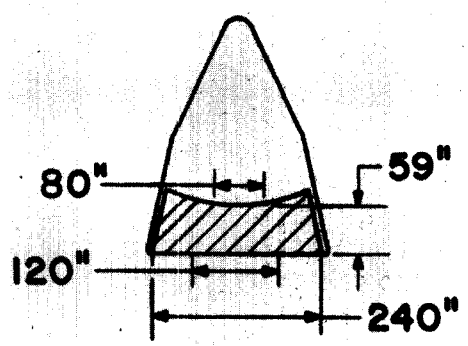

TASK A

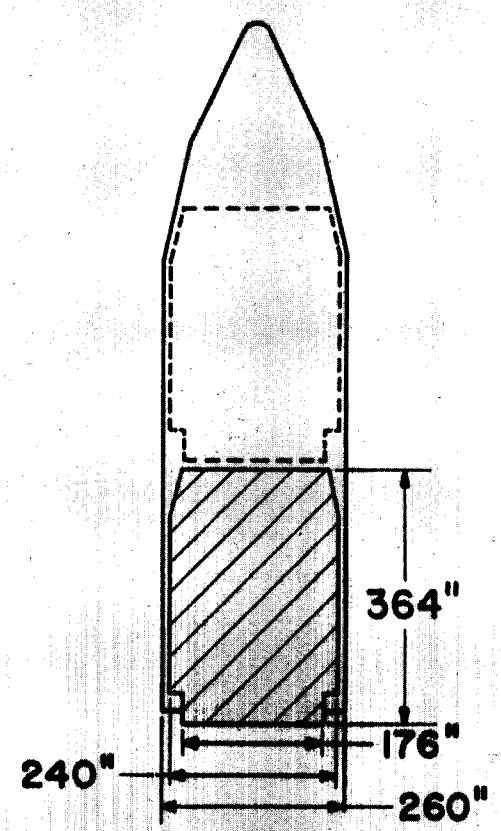

TASK B

PROPULSION LOCATION

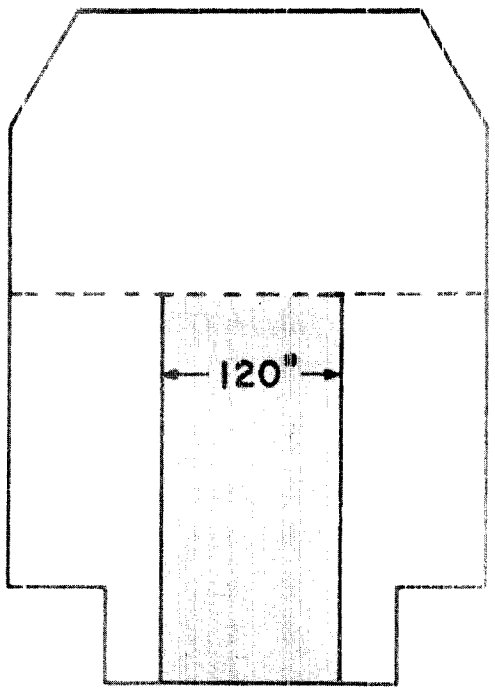

FLIGHT ORIENTATION

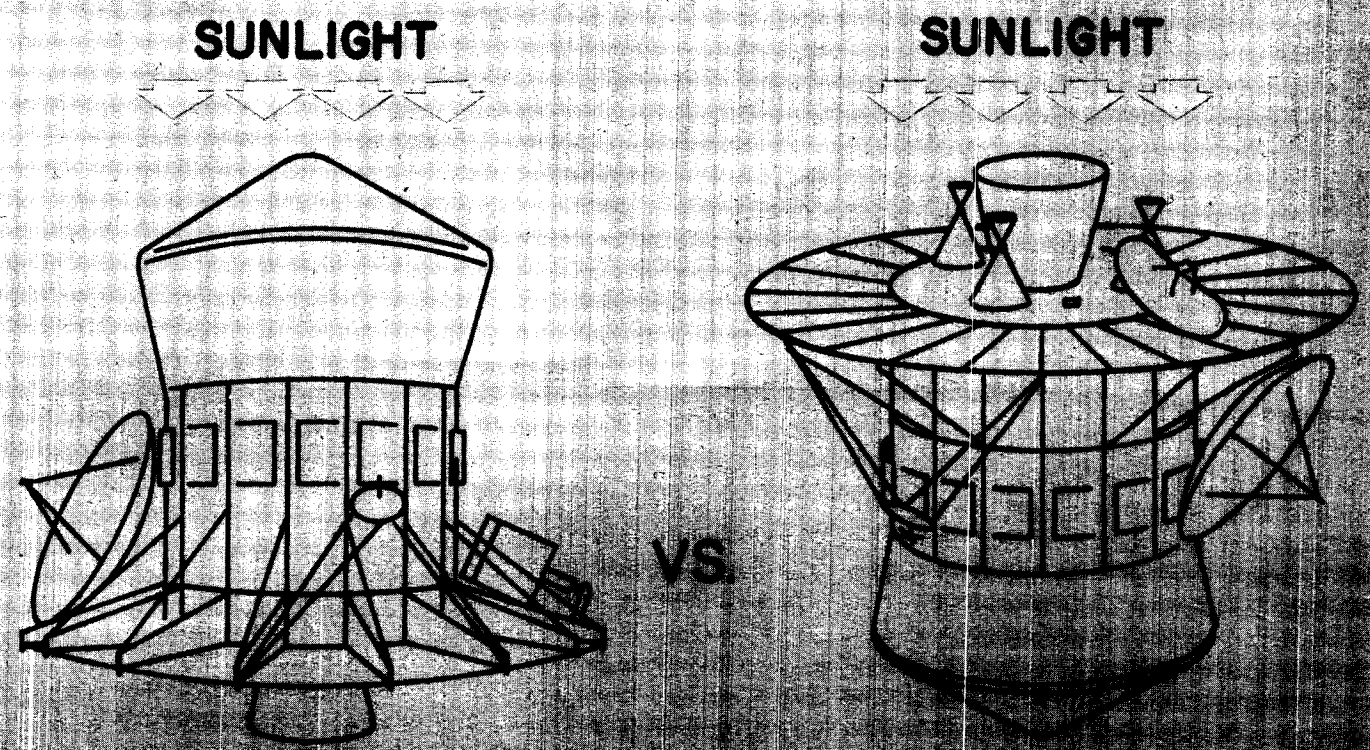

PSP LOCATION

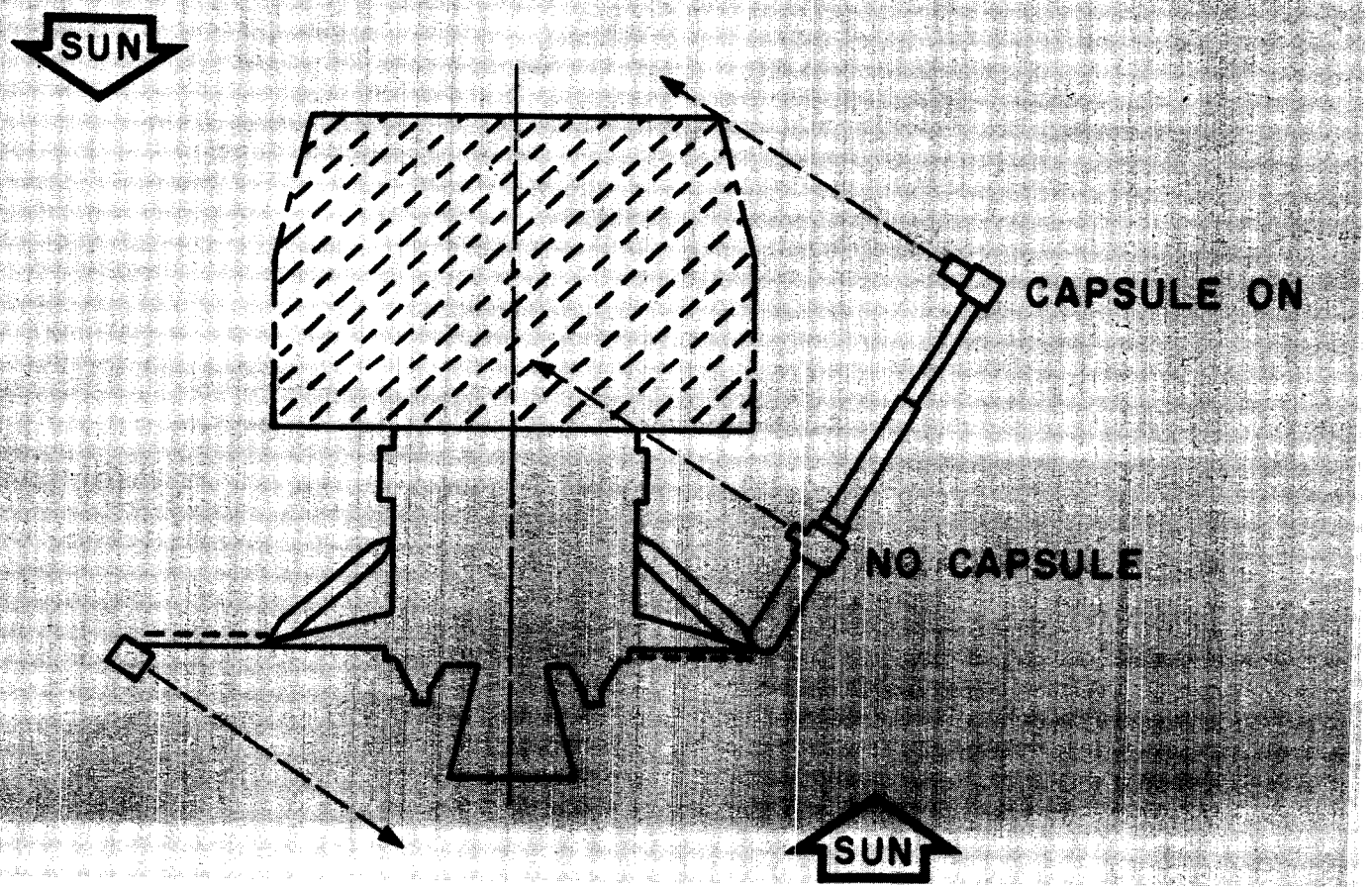

PSP LOCATION

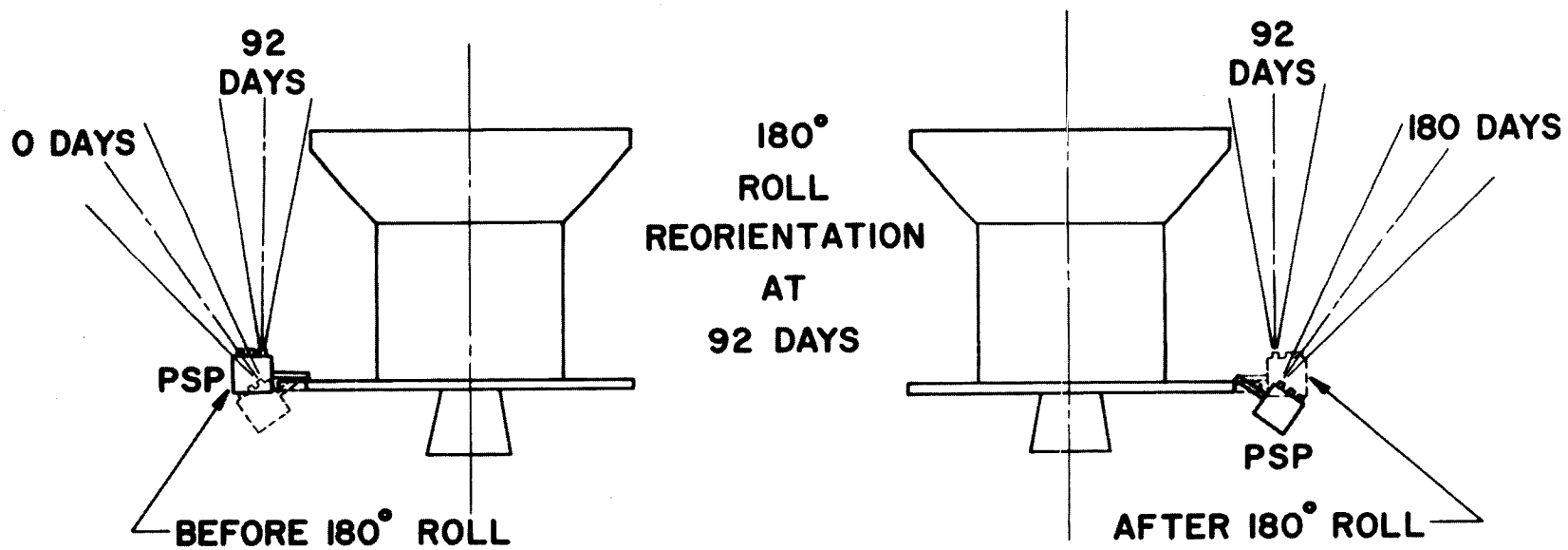

ELECTRONICS LOCATION

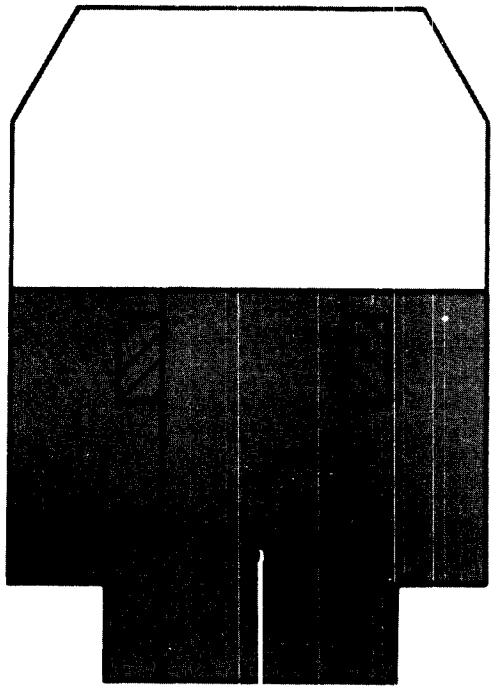

NUMBER OF SIDES

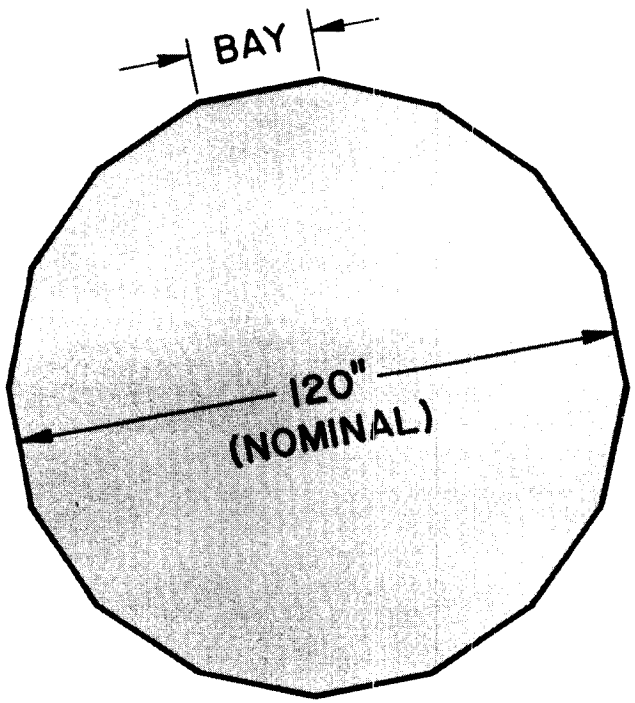

16 SIDES

SIDES	LBS/BAY	BAY LENGTH
12	59	32"
16	44	24"
24	30	16"

SOLAR PANEL CONFIGURATION

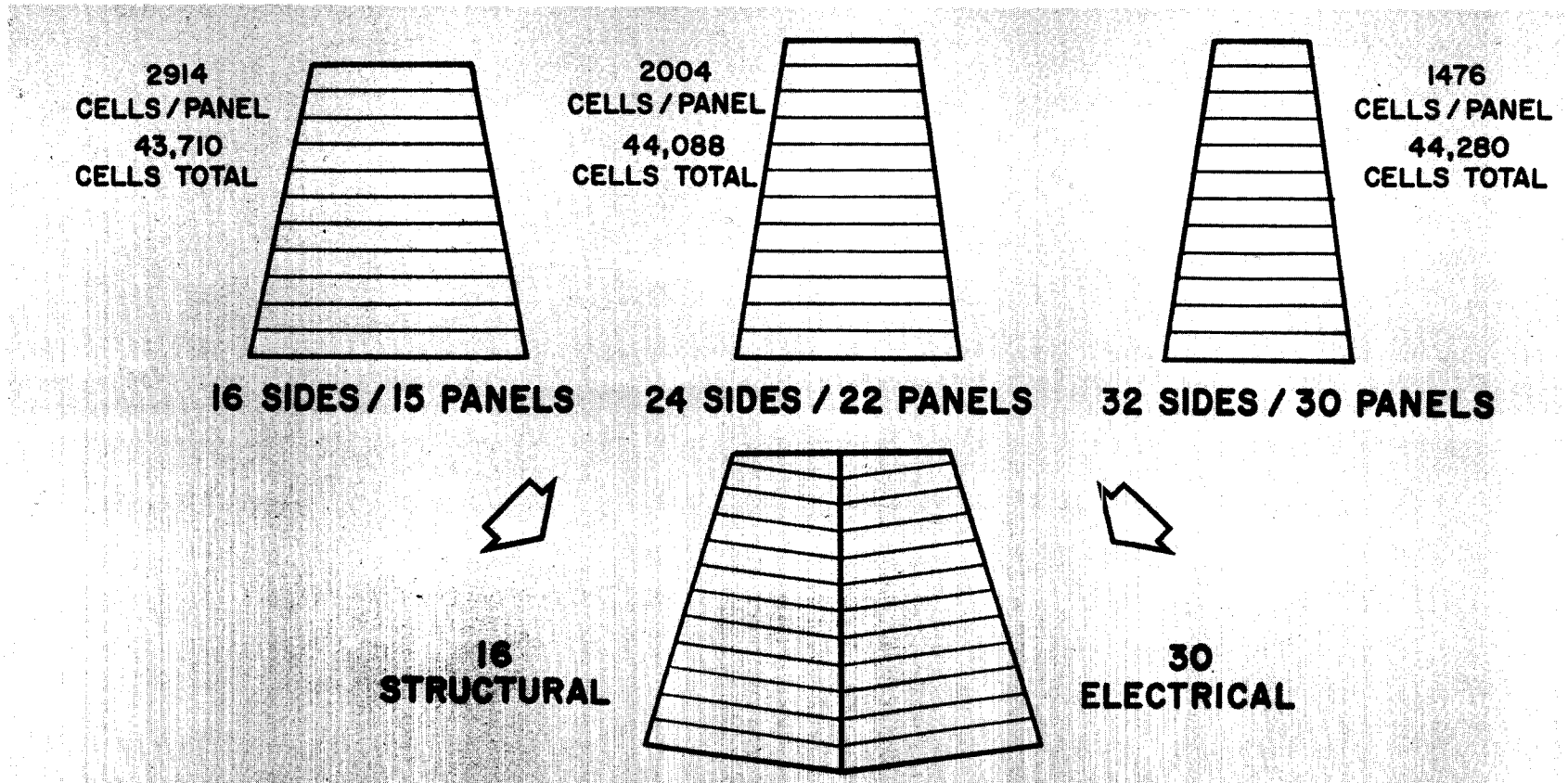

ANTENNA LOCATION

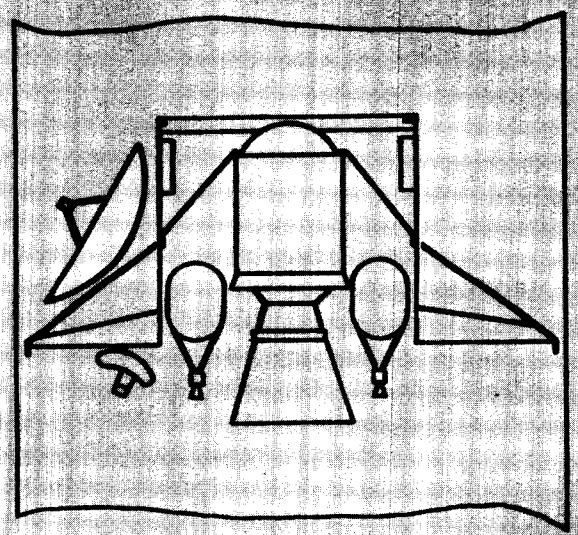

CONFIGURATION "G"

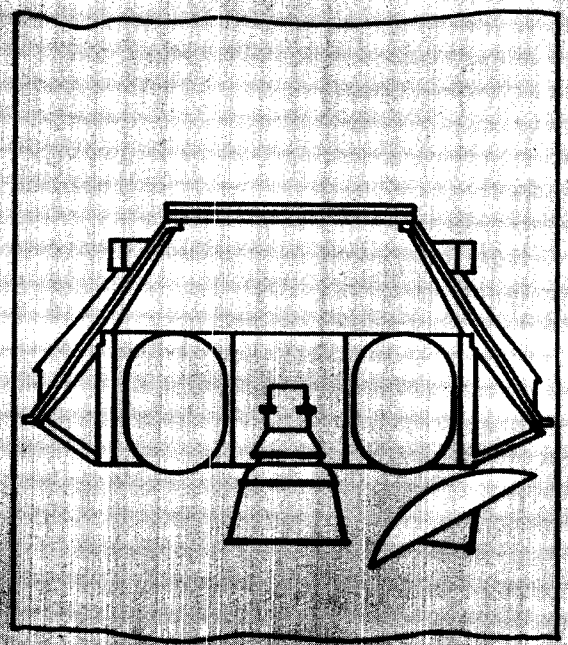

CONFIGURATION "H"

NON-DEPLOYED ANTENNA

- AUXILIARY CRUISE ANTENNA
- CANOPUS VERIFICATION
- DEPLOYABLE SOLAR PANELS
- UNUSABLE IN MANEUVER ALTITUDE
- PACKAGING DIFFICULTIES

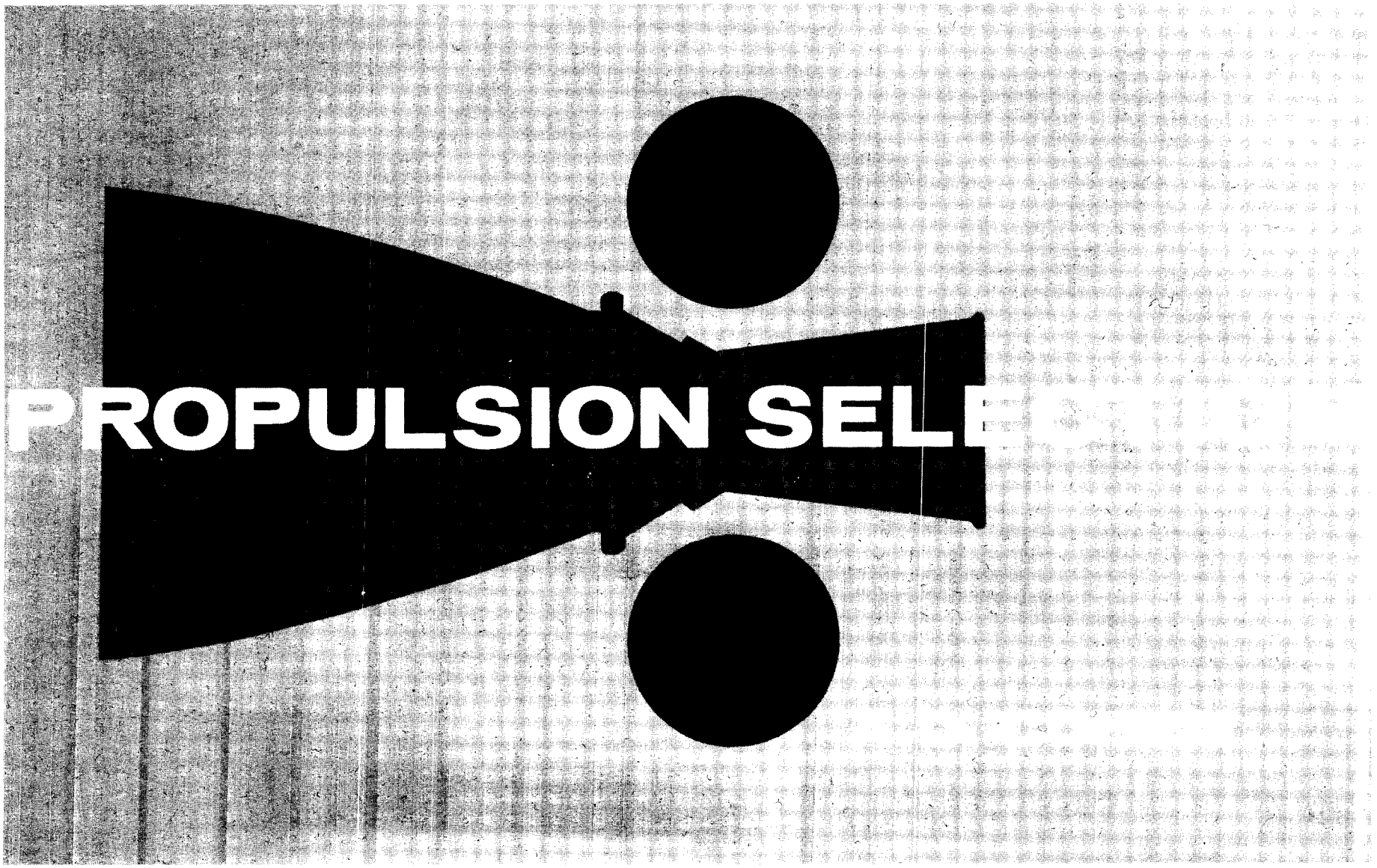
PROPULSION SEL

CANDIDATE SYSTEMS

- LEMDE
- TRANSTAGE
- SOLID (OI) -LIQUID (MC/OT)

PROPULSION DESIGN REQUIREMENTS

	1971-73	1975-77
ORBIT INSERTION ΔV, KPS		
REQUIRED	2.0	
DESIRED	2.2	AS HIGH AS POSSIBLE
MID-COURSE ΔV, MPS	200	200
ORBIT TRIM ΔV, MPS	100	100
MINIMUM ΔV FOR MIDCOURSE		
REQUIRED	1.0±0.07	1.0±0.07
DESIRED	0.1±0.007	1.0 ±0.007
MAXIMUM PROPULSION WEIGHT, LBS	15,000	15,000

CURRENT LEMDE

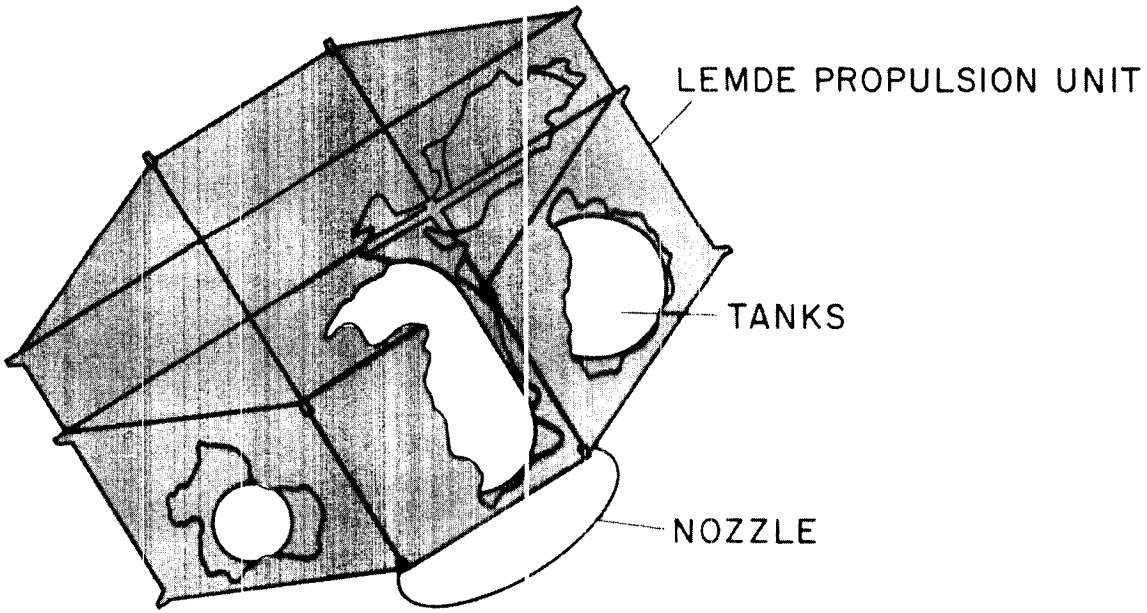

PERFORMANCE MODIFICATIONS

- GIMBAL ACTUATORS
- PROPELLANT ACQUISITION

LONG LIFE RELIABILITY MODIFICATIONS

- PRESSURIZATION SYSTEM
- OXIDIZER STORAGE
- OTHER

LEMDE MODIFICATIONS

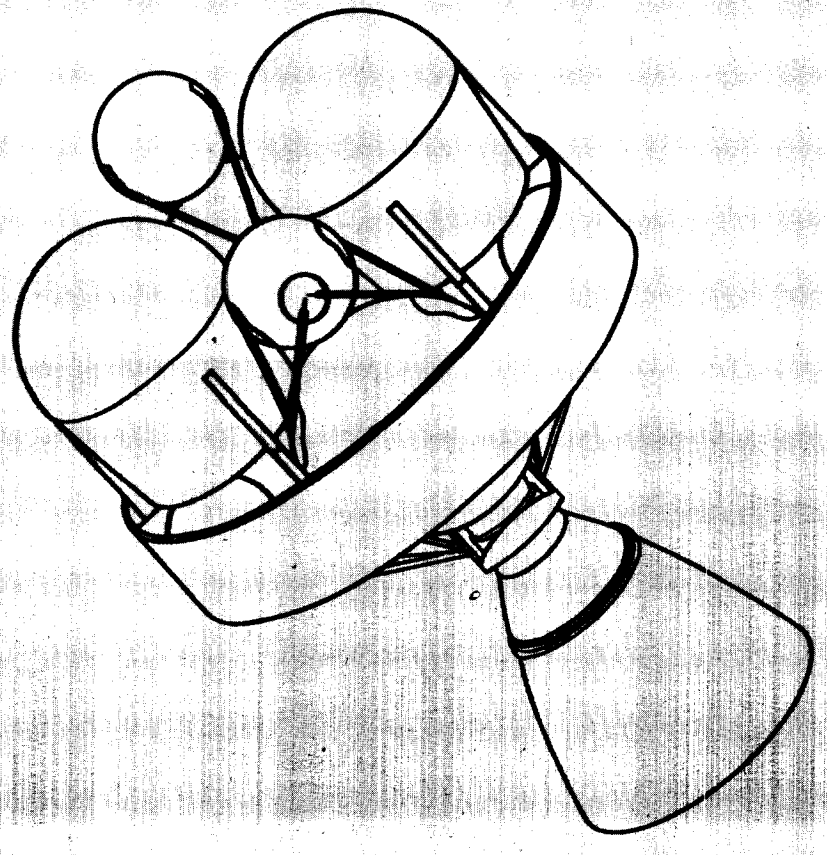

CURRENT TRANSTAGE

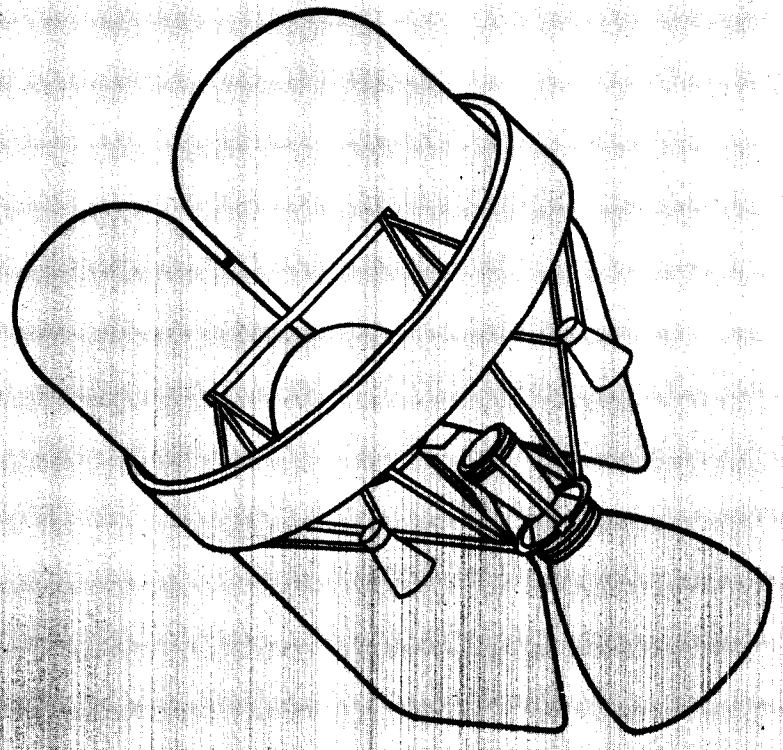

PERFORMANCE MODIFICATIONS

- LOW THRUST SYSTEM
- PROPELLANT ACQUISITION

LONG LIFE RELIABILITY MODIFICATIONS

- REDUCE LEAKAGE

  BRAZED/WELDED PLUMBING
  PROPELLANT PREVALVES
  ACTUATOR BOOTS

- OXIDIZER STORAGE

- BLOWDOWN PRESSURIZATION

TRANSTAGE MODIFICATIONS

- OFF-LOADED TANKS
- SHORTENED TANKS
- REPLACE OXIDIZER TANK
- SINGLE MAIN ENGINE
- CHANGE O/F RATIO
- BLOWDOWN PRESSURIZATION

TRANSTAGE MODIFICATIONS

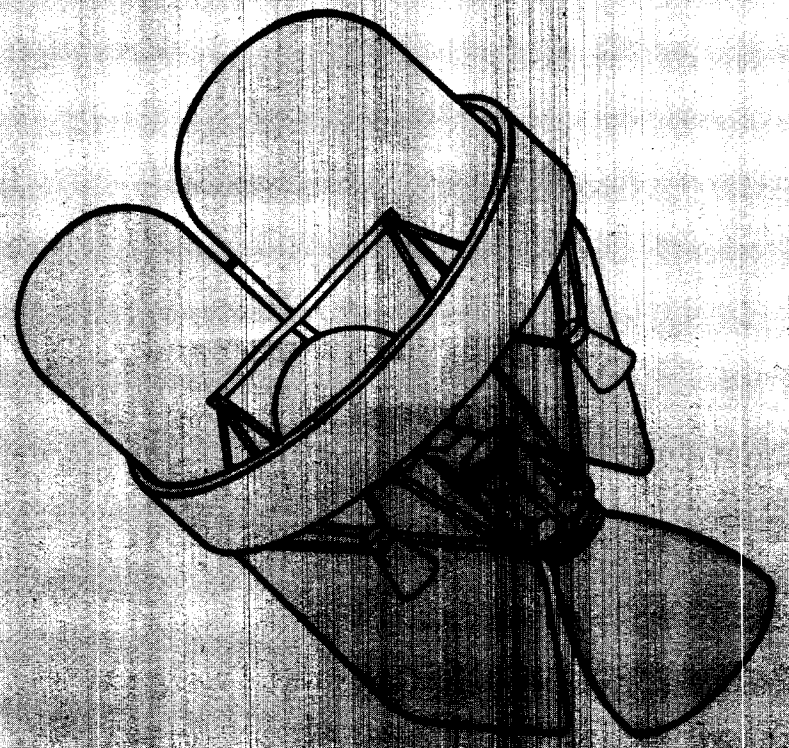

MODIFIED MINUTEMAN WING VI

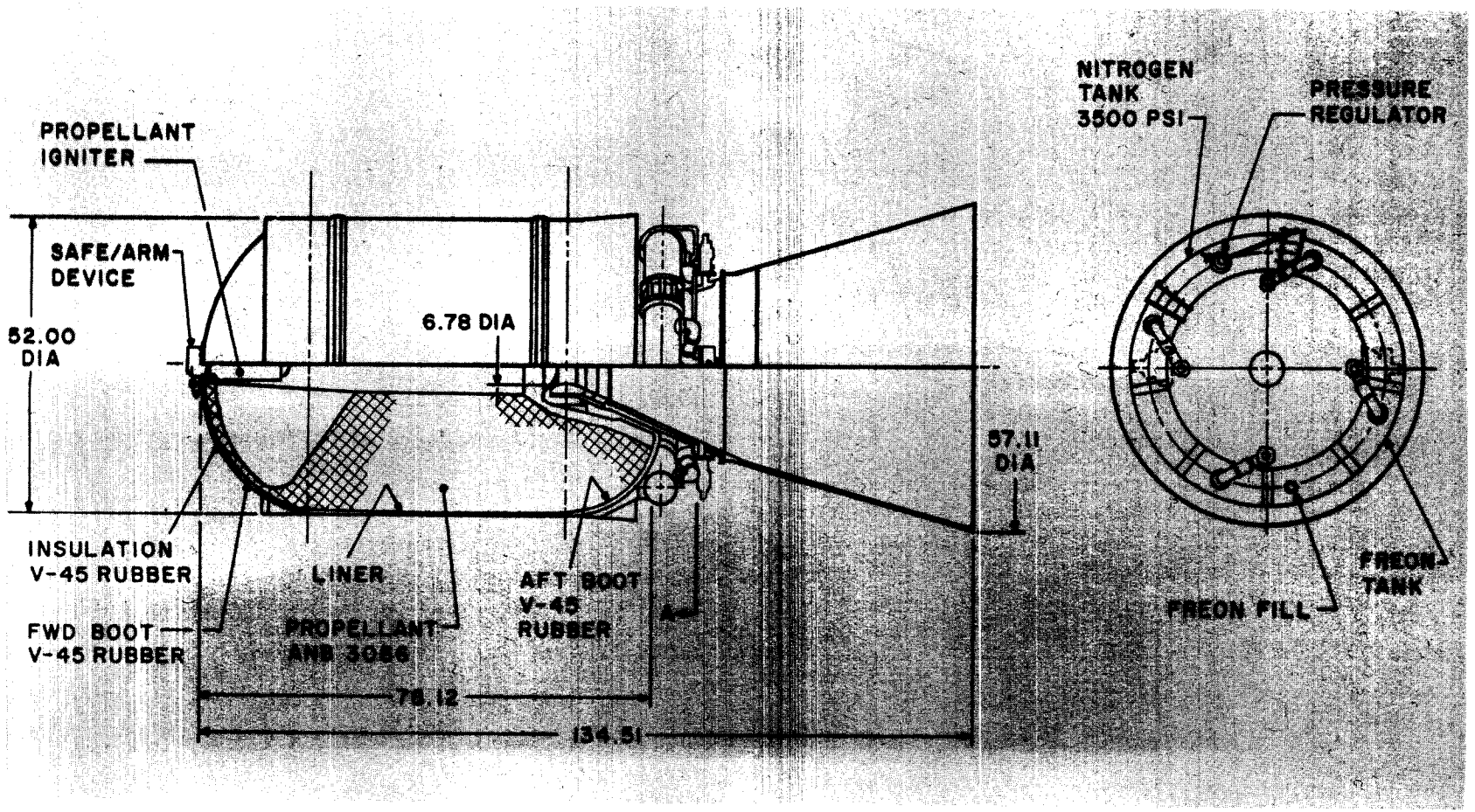

CYLINDRICAL FIBERGLASS CONCEPT

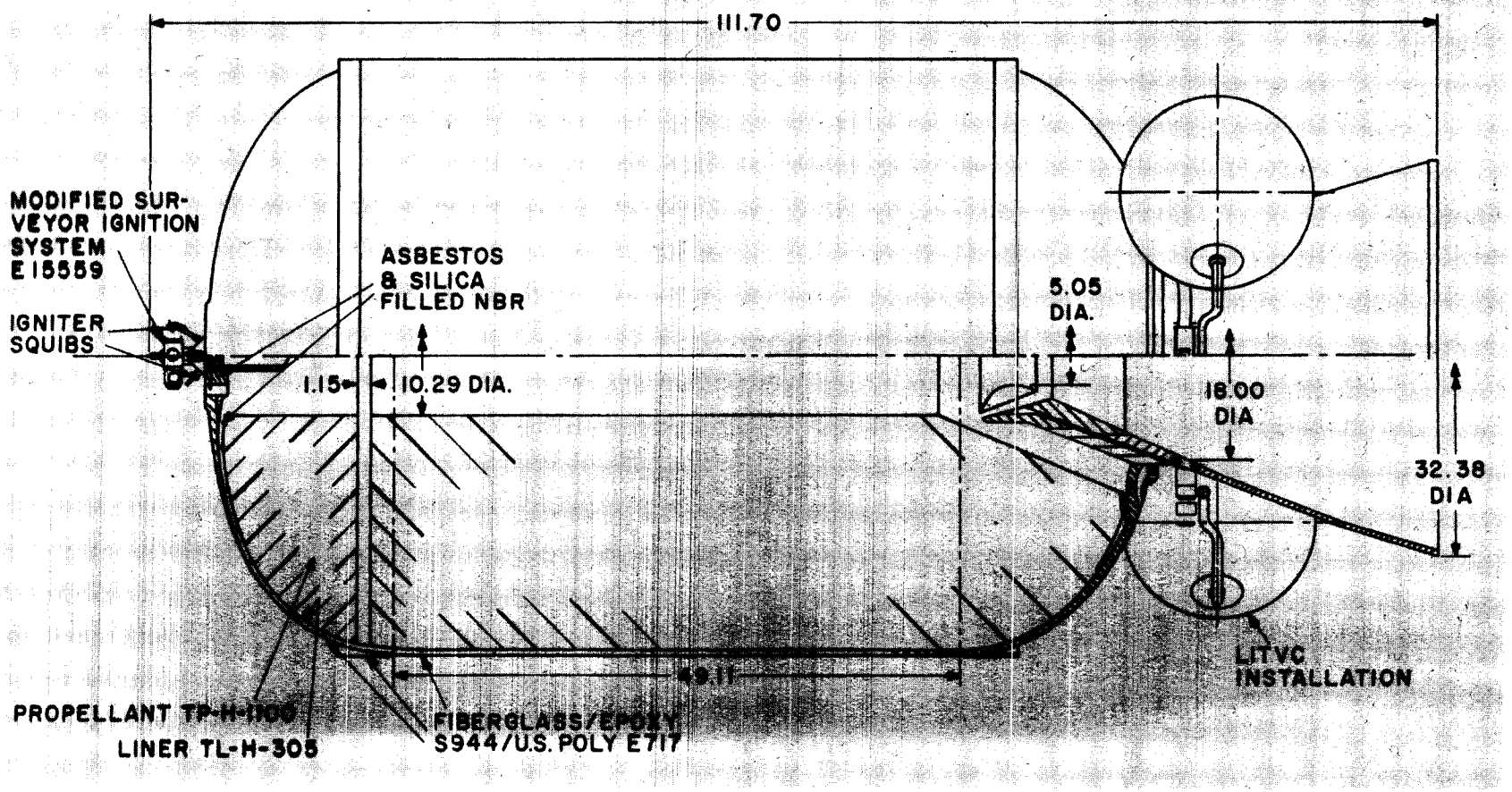

OVALOID FIBERGLASS CONCEPT

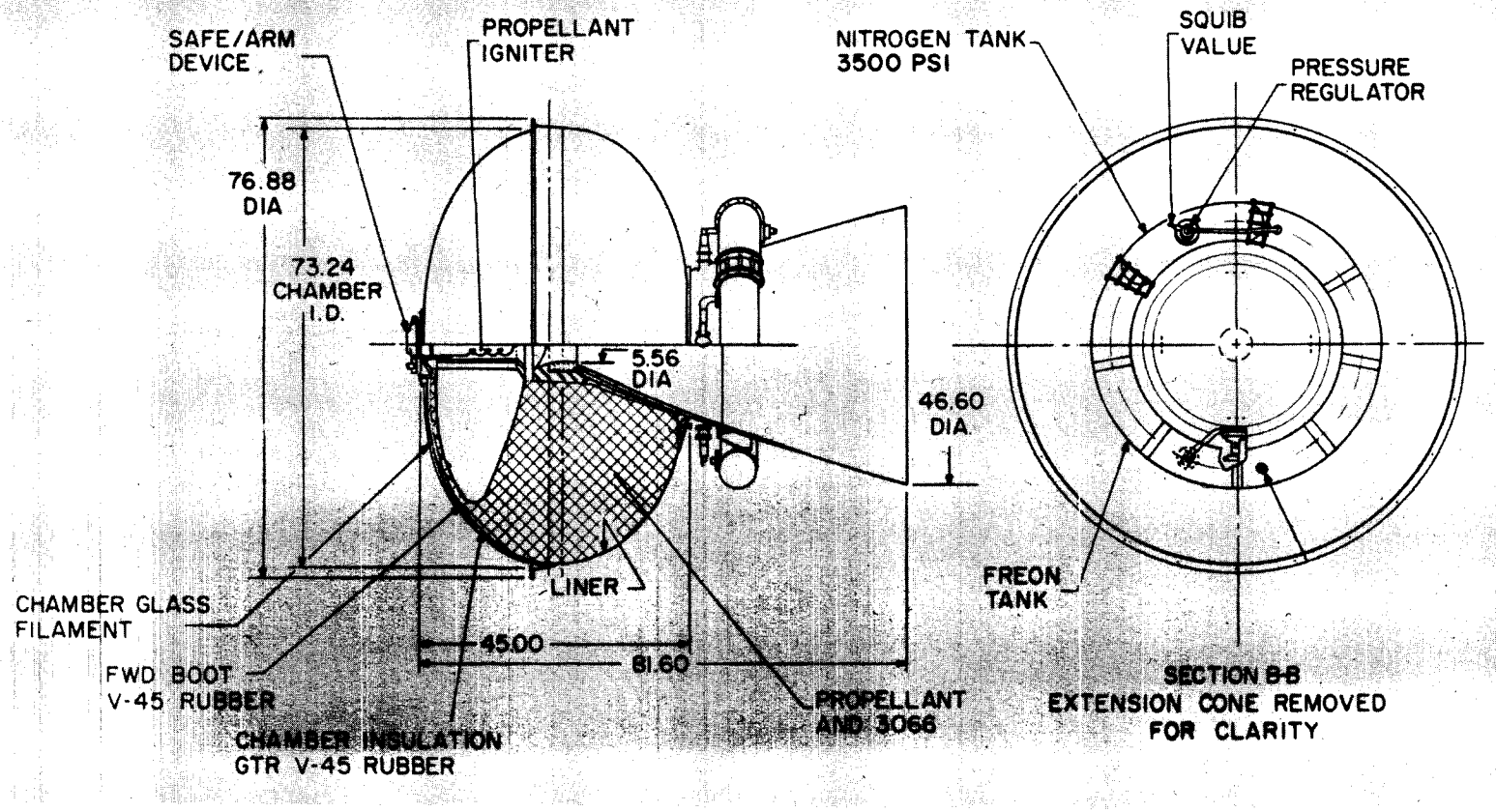

MODIFIED MINUTEMAN WING VI

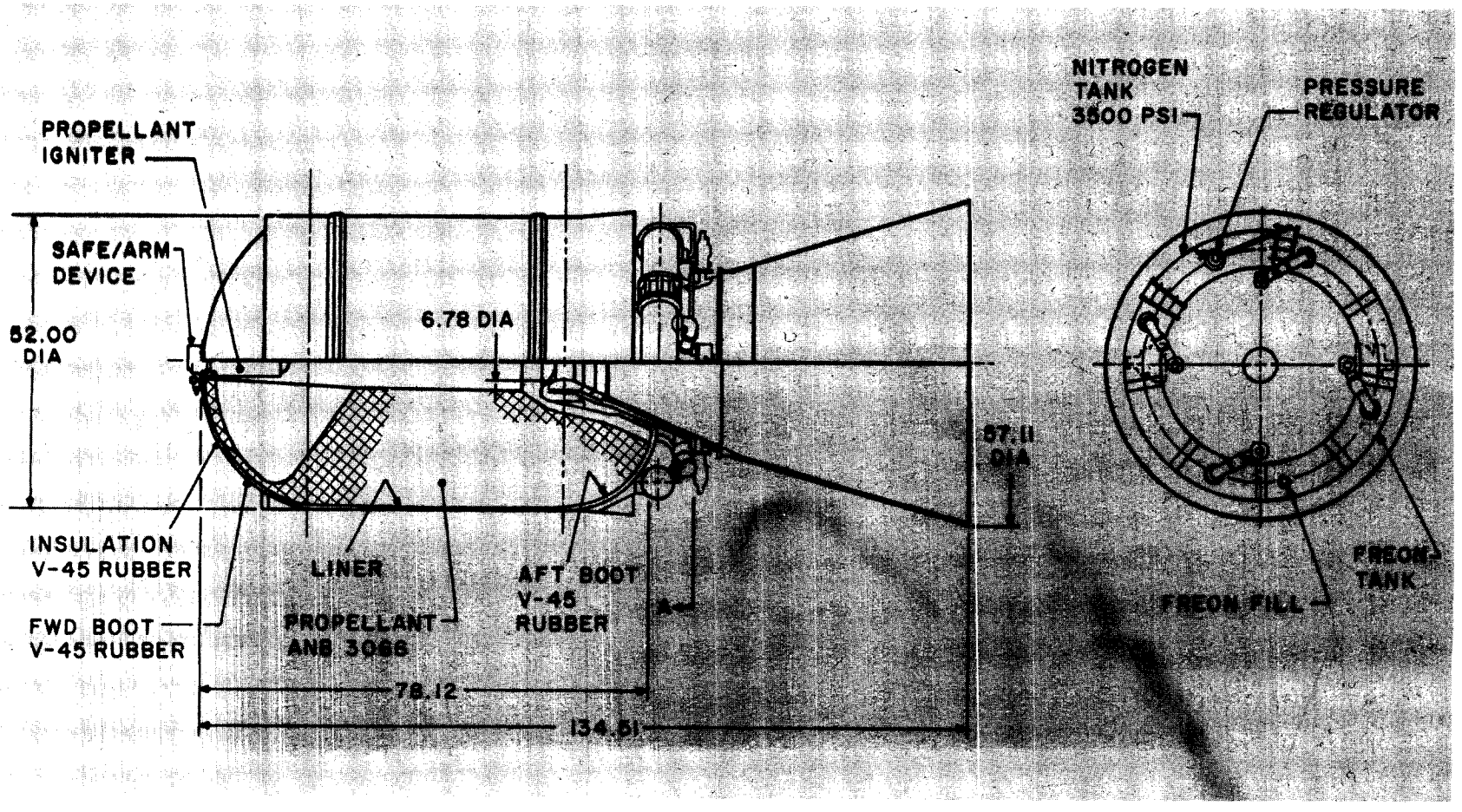

MODIFIED MINUTEMAN

USES EXISTING

- TOOLING
- PRIMARY NOZZLE STRUCTURE
- NOZZLE INSULATION
- TVC SYSTEM
- PROPELLANT FORMULATION
- GRAIN DESIGN
- IGNITOR SYSTEM
- TEST EQUIPMENT
- FIXTURES

MC/OT PROPULSION SELECTION

MONOPROPELLANT

BIPROPELLANT

4 ENGINES

PAIR-OUT CAPABILITY

100 POUND THRUSTORS

MC/OT PROPULSION EVALUATION

	MONOPROPELLANT	BIPROPELLANT
MISSION SUCCESS	• FEWER PARTS • PROVEN PROPELLANT ACQUISITION	
MISSION PERFORMANCE	• I_{sp} ~ 240 SEC • WEIGHT = 2181 LB • IO/MC/OT WT = 11,694 LB	• I_{sp} ~ 300 SEC • WEIGHT = 1699 LB • IO/MC/OT WT = 11,009 LB
COST	• ~ $7.6 M	• ~ $8.8 M
CONTRIBUTION TO LATER MISSIONS	• ΔV = 1.42 KPS	• ΔV = 1.52 KPS
ADDITIONAL '71 CAPABILITY	• AMPLE GROWTH	• AMPLE GROWTH

MONOPROPELLANT SCHEMATIC

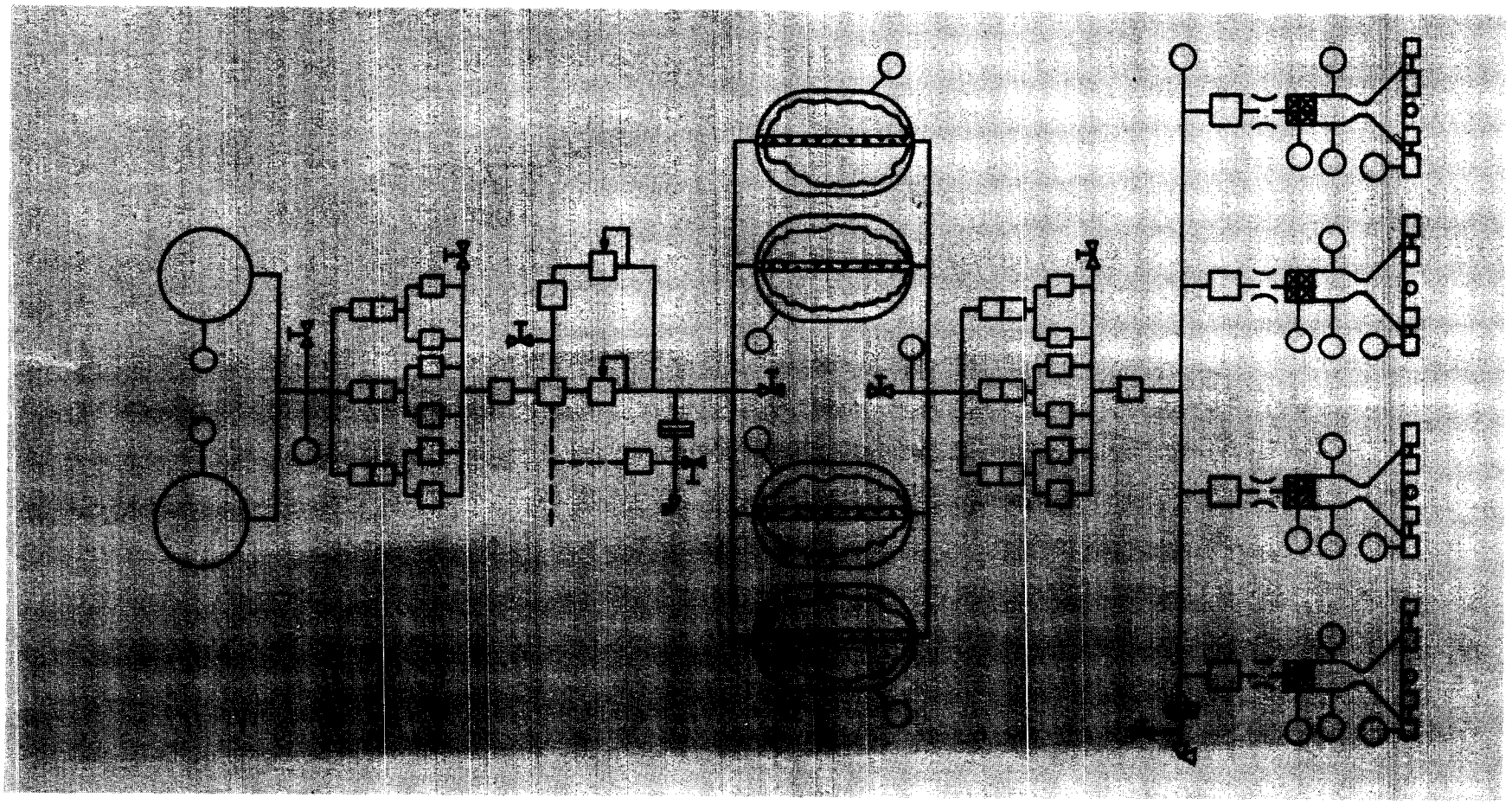

MONOPROPELLANT SCHEMATIC

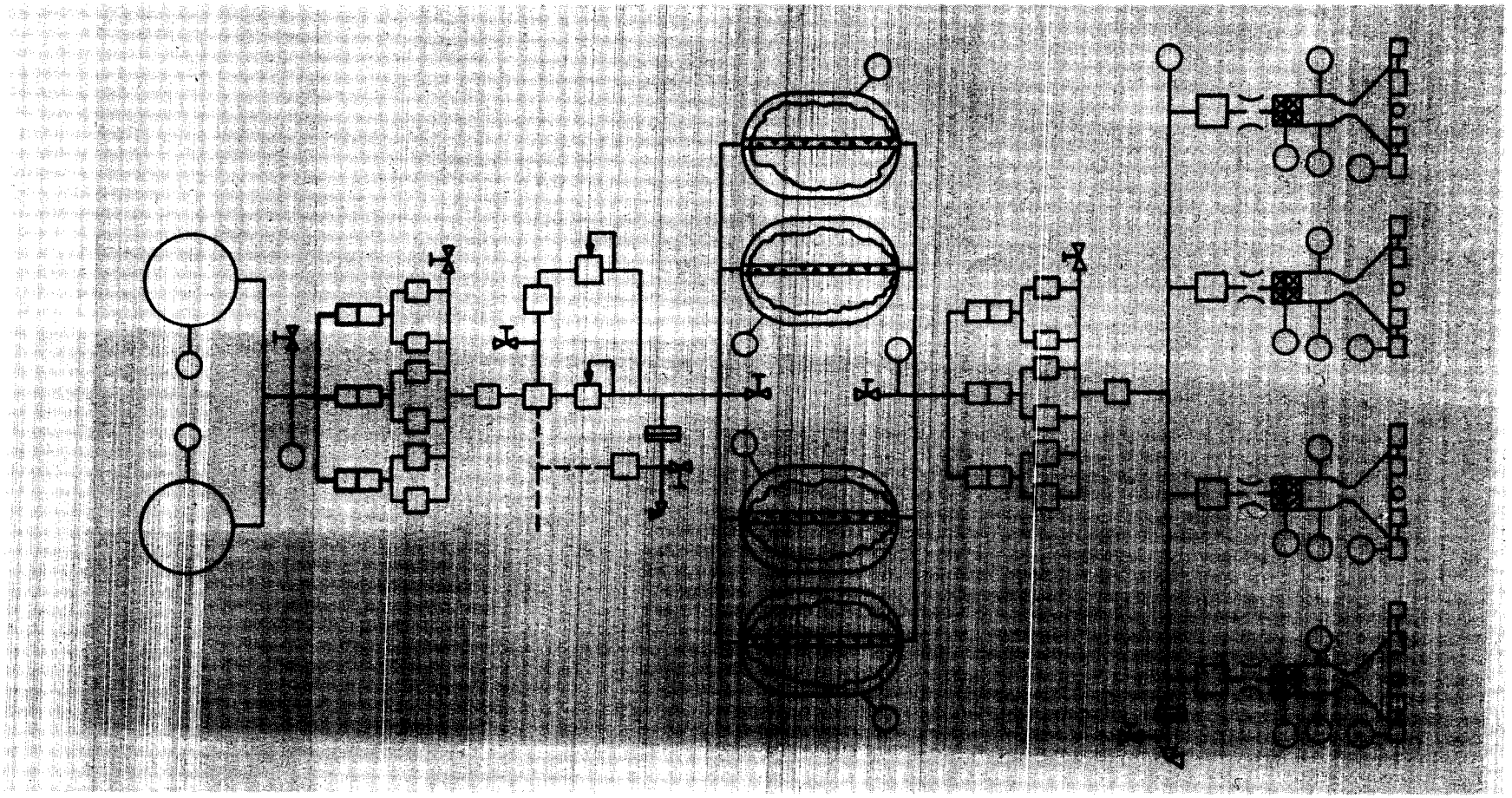

MONOPROPELLANT SCHEMATIC

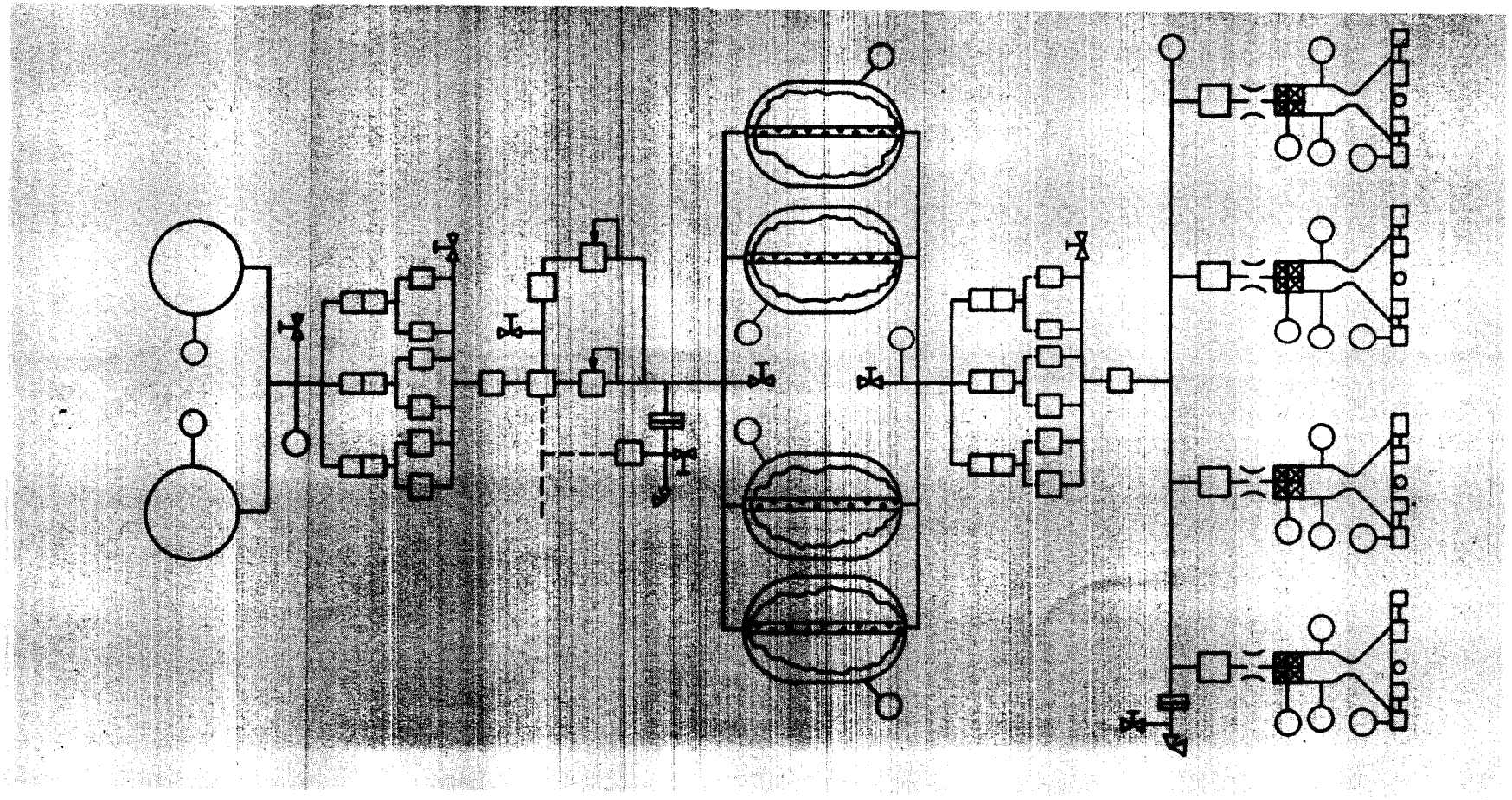

MONOPROPELLANT SCHEMATIC

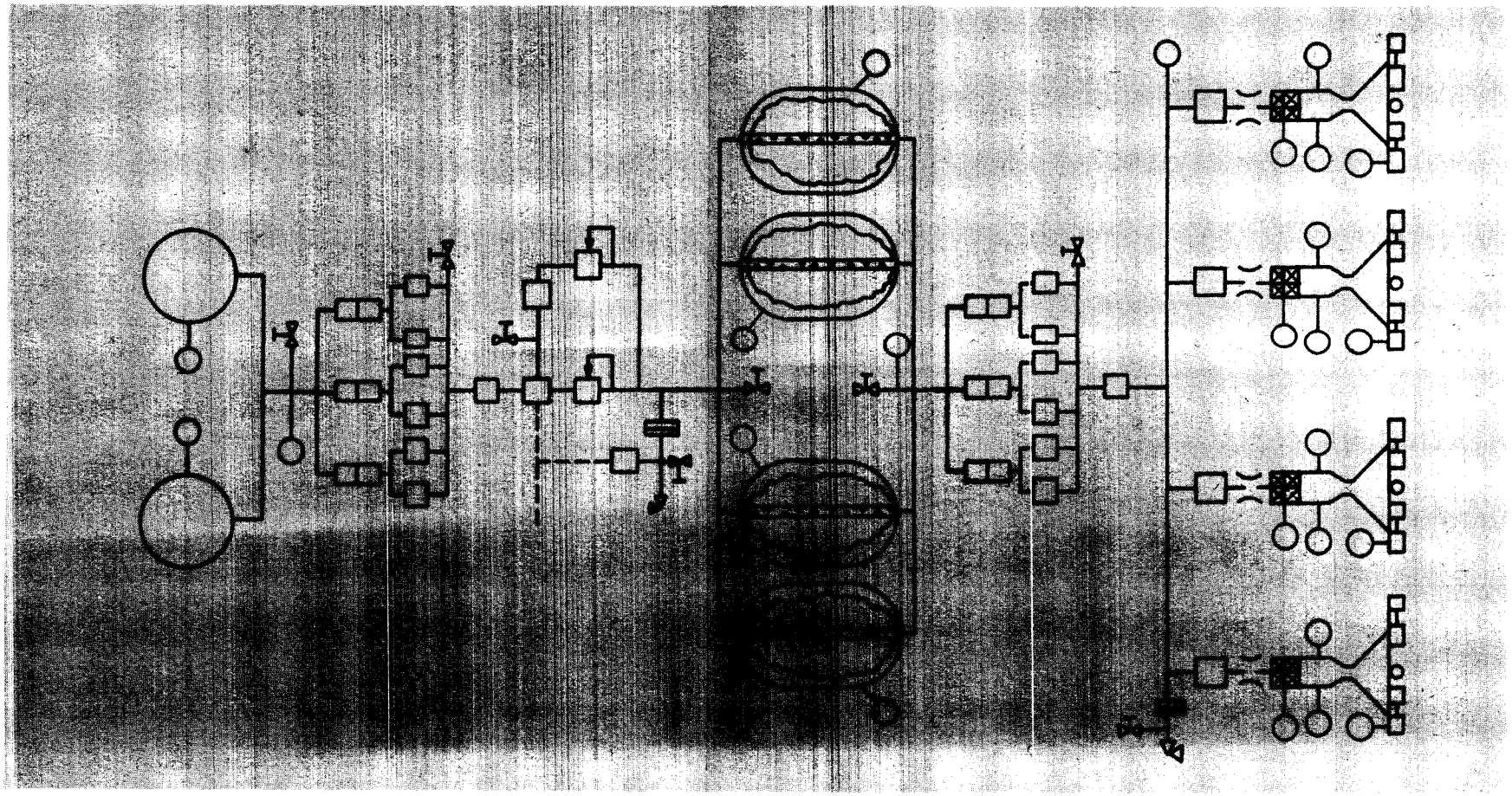

MONOPROPELLANT SCHEMATIC

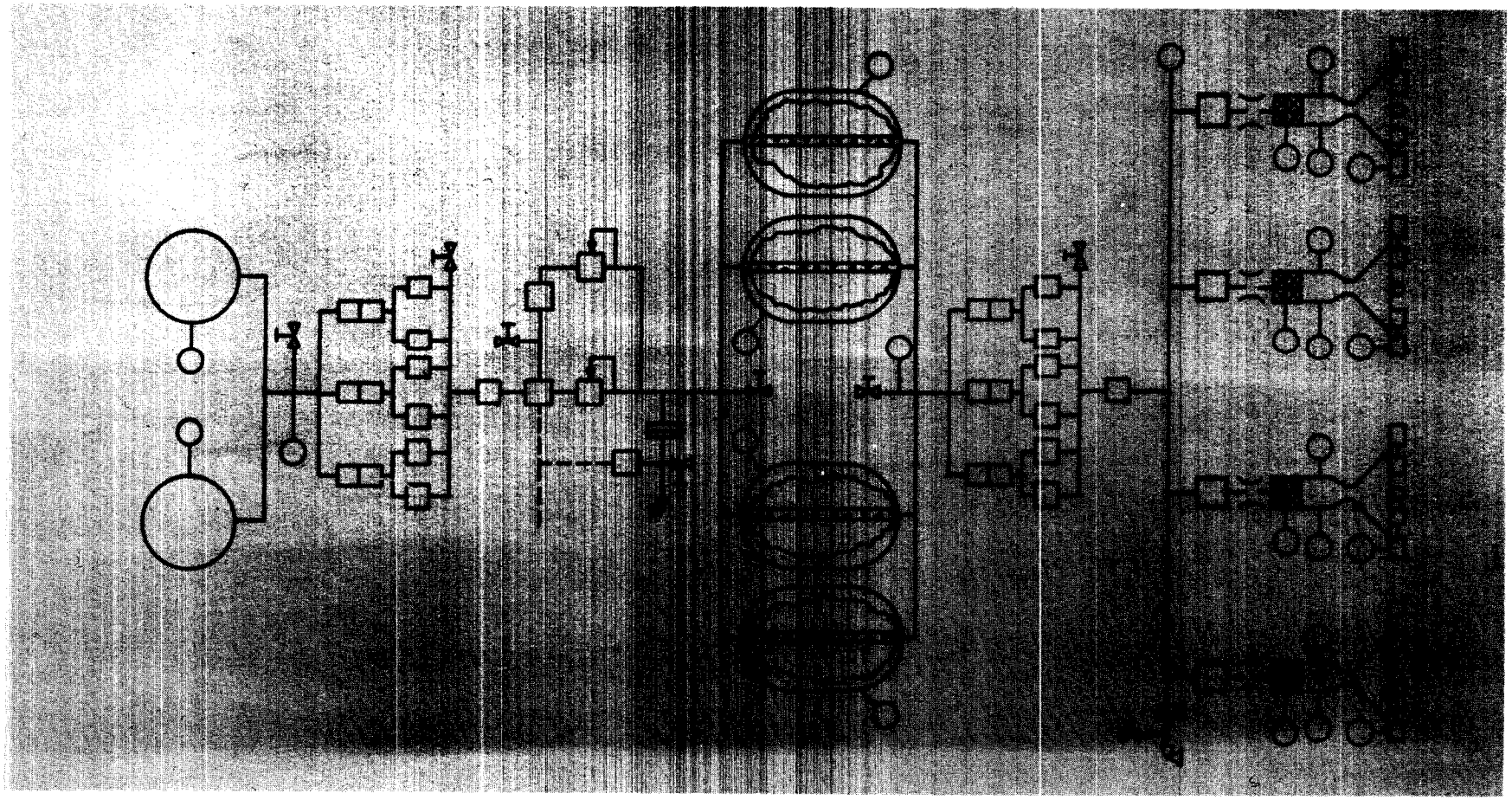

MONOPROPELLANT SCHEMATIC

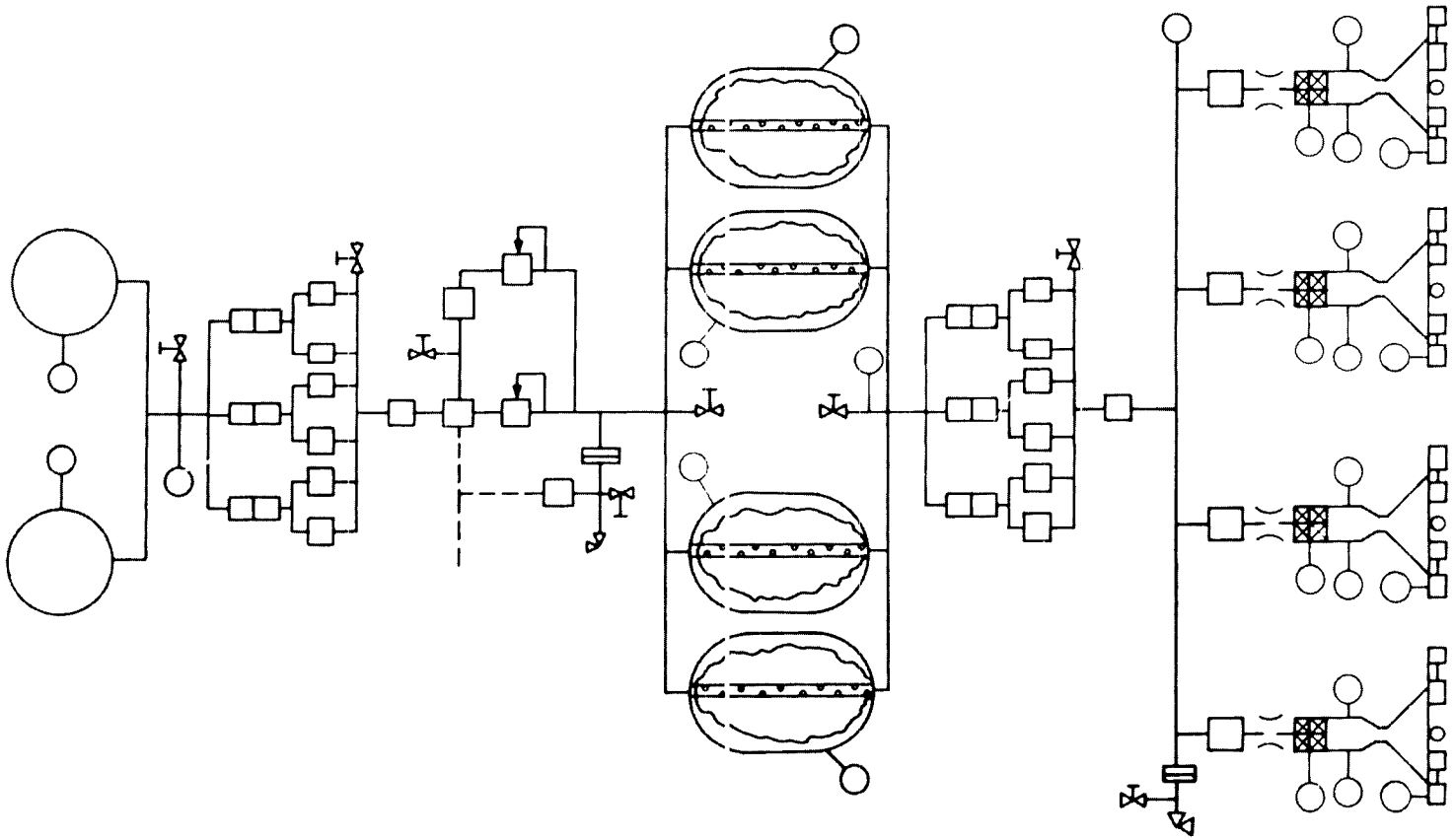

PREFERRED SYSTEM

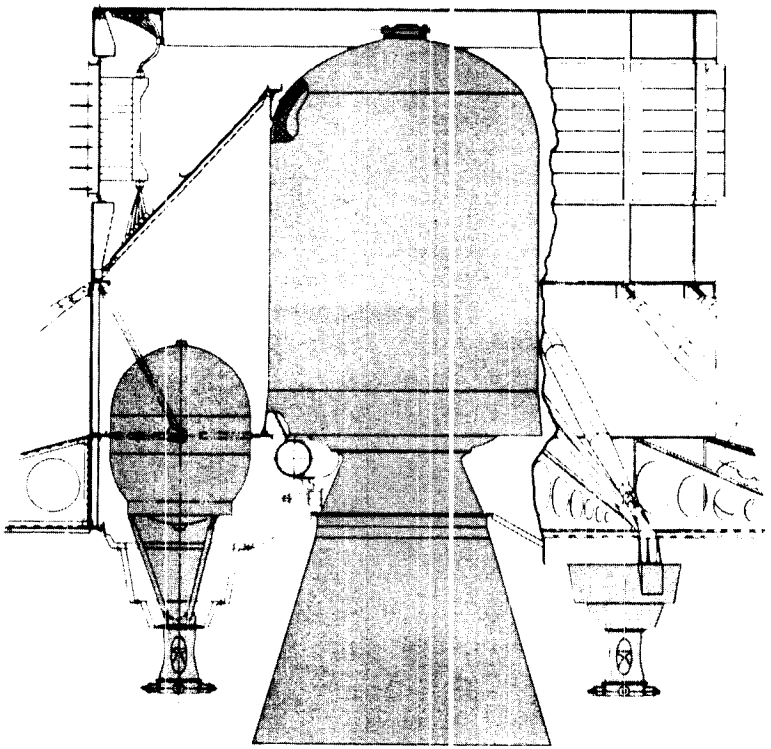

PROBLEM AREAS

- PLUME RADIATION
- VACUUM STORAGE OF SOLIDS
- VACUUM STORAGE OF CATALYST
- PAIR-OUT SENSING
- LEAKAGE CONTROL

CONFIGURATION SELECTION

CONTINUED

J. H. CHESTEK

CANDIDATE SYSTEMS

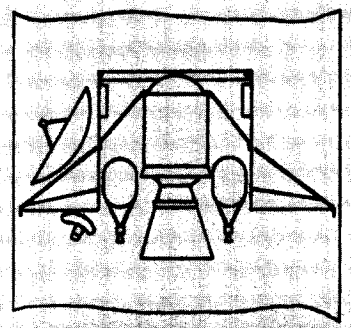

MINUTEMAN

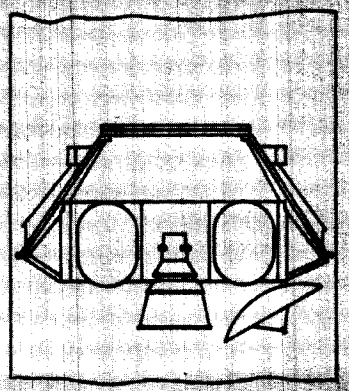

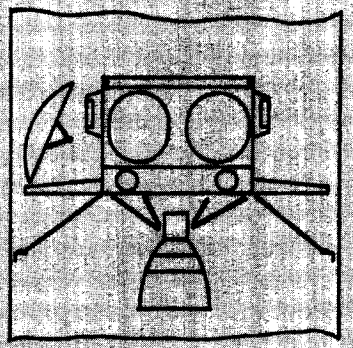

LEMDE

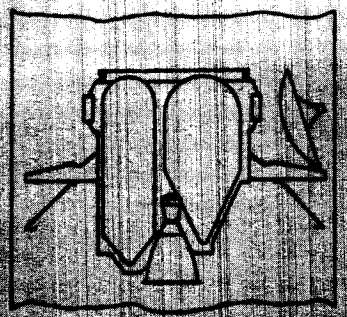

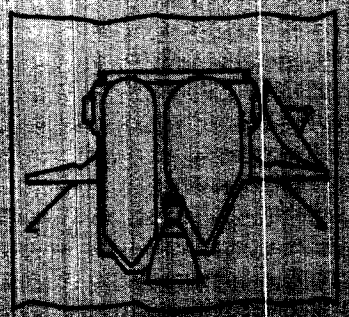

TRANSTAGE

CANDIDATE SYSTEMS

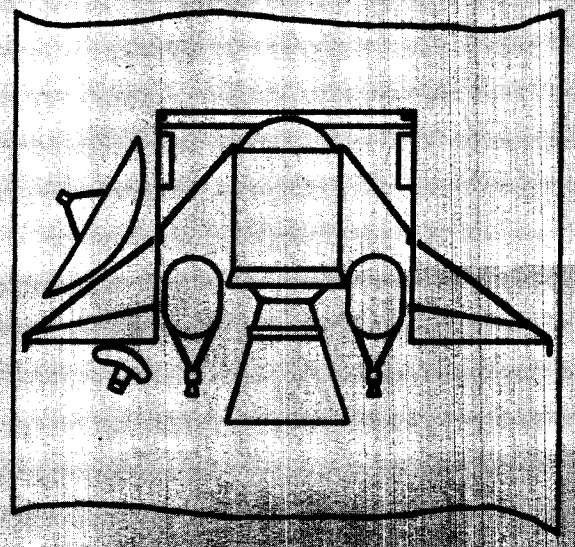

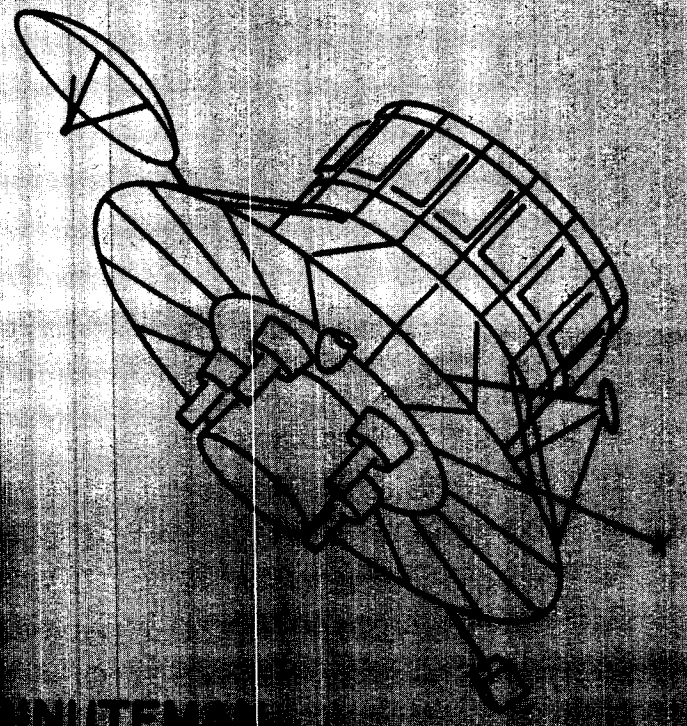

MODIFIED MINUTEMAN
CONFIGURATION G

CANDIDATE SYSTEMS

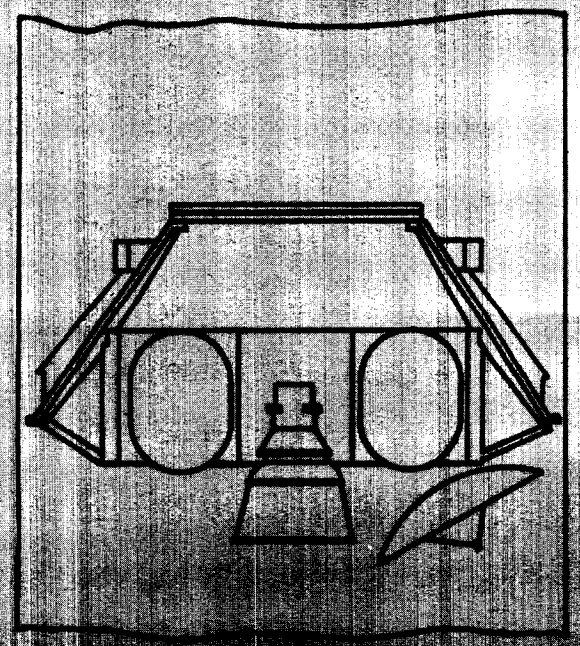

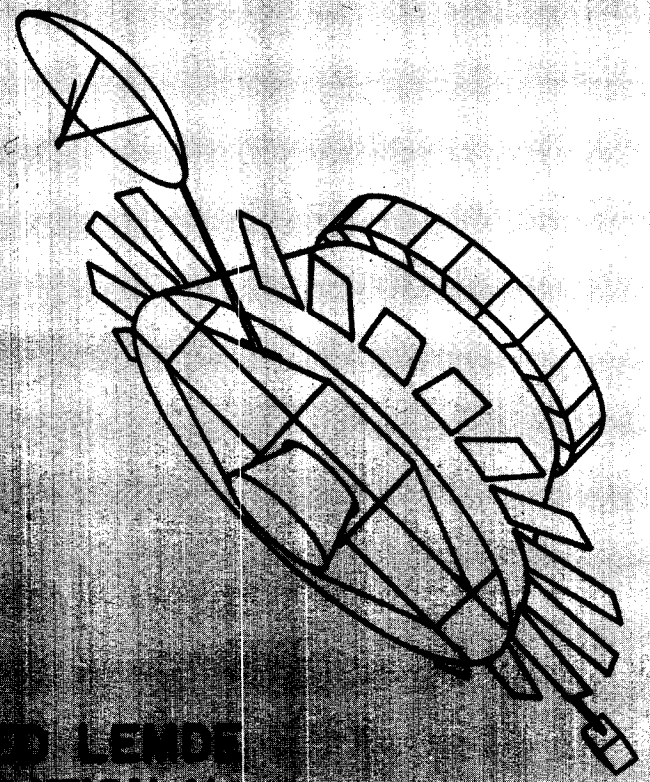

UNMODIFIED LEMDE
CONFIGURATION H

CANDIDATE SYSTEMS

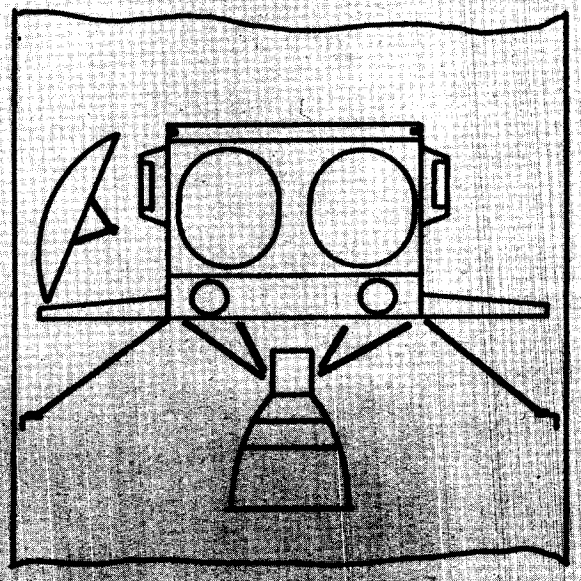

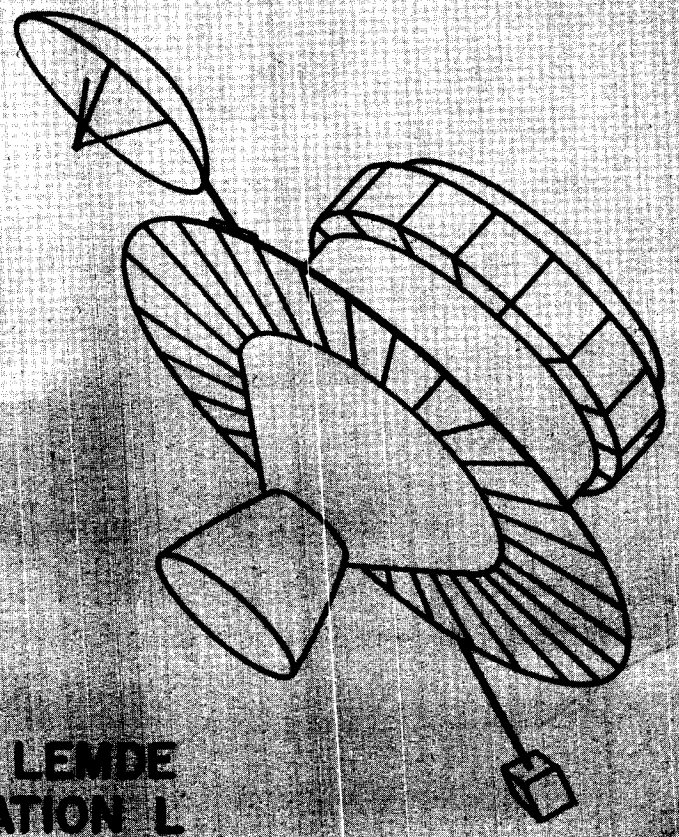

MODIFIED LEMDE
CONFIGURATION L

CANDIDATE SYSTEMS

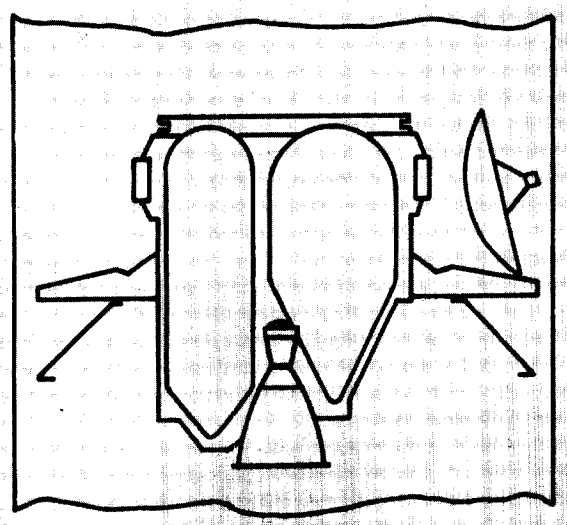

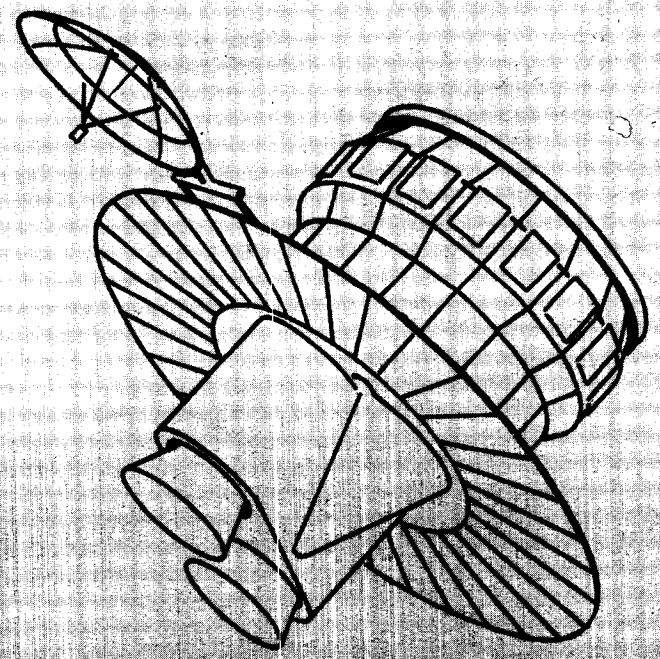

UNMODIFIED TRANSTAGE
CONFIGURATION N

CANDIDATE SYSTEMS

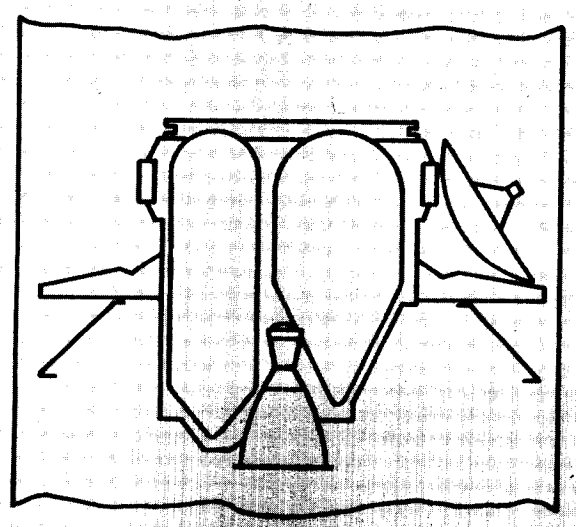

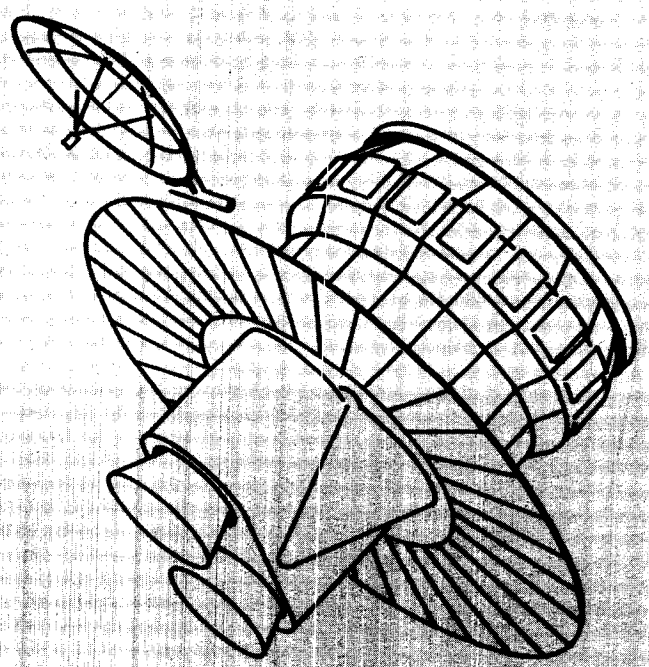

MODIFIED TRANSTAGE
CONFIGURATION Q

SELECTION CRITERIA

CONSTRAINTS

- PLANETARY QUARANTINE
- MINIMUM SCHEDULE RISK

COMPETING CHARACTERISTICS

- MISSION SUCCESS
- MISSION PERFORMANCE
- COST
- CONTRIBUTION TO LATER MISSIONS
- ADDITIONAL 1971 CAPABILITY

SELECTION CRITERIA

CONSTRAINTS

- PLANETARY QUARANTINE
- MINIMUM SCHEDULE RISK

COMPETING CHARACTERISTICS

- MISSION SUCCESS
- MISSION PERFORMANCE
- COST
- CONTRIBUTION TO LATER MISSIONS
- ADDITIONAL 1971 CAPABILITY

PLANETARY QUARANTINE

- SOLID ROCKET

  HIGHER KILL PROBABILITY

  MORE DATA AVAILABLE

- MONOPROPELLANT

  SMALLER, SEPARATE SYSTEM

SELECTION CRITERIA

CONSTRAINTS

- PLANETARY QUARANTINE
- MINIMUM SCHEDULE RISK

COMPETING CHARACTERISTICS

- MISSION SUCCESS
- MISSION PERFORMANCE
- COST
- CONTRIBUTION TO LATER MISSIONS
- ADDITIONAL 1971 CAPABILITY

SELECTION CRITERIA

CONSTRAINTS

- PLANETARY QUARANTINE
- MINIMUM SCHEDULE RISK

COMPETING CHARACTERISTICS

- MISSION SUCCESS
- MISSION PERFORMANCE
- COST
- CONTRIBUTION TO LATER MISSIONS
- ADDITIONAL 1971 CAPABILITY

MISSION SUCCESS

	CONFIGURATION G (SOLID)	CONFIGURATION L (MOD LEMDE)	CONFIGURATION Q (MOD TRANSTAGE)
PROPULSION		HIGHEST POTENTIAL	
AUTOPILOT	RIGID BODY	LEAST ELECTRONICS	
ATTITUDE CONTROL	RIGID BODY	QUESTION	QUESTION
THERMAL	HEAT INPUT		

SELECTION CRITERIA

CONSTRAINTS

- PLANETARY QUARANTINE
- MINIMUM SCHEDULE RISK

COMPETING CHARACTERISTICS

- MISSION SUCCESS
- MISSION PERFORMANCE
- COST
- CONTRIBUTION TO LATER MISSIONS
- ADDITIONAL 1971 CAPABILITY

SELECTION CRITERIA

CONSTRAINTS

- PLANETARY QUARANTINE
- MINIMUM SCHEDULE RISK

COMPETING CHARACTERISTICS

- MISSION SUCCESS
- MISSION PERFORMANCE
- COST
- CONTRIBUTION TO LATER MISSIONS
- ADDITIONAL 1971 CAPABILITY

SELECTION CRITERIA

CONSTRAINTS

- PLANETARY QUARANTINE
- MINIMUM SCHEDULE RISK

COMPETING CHARACTERISTICS

- MISSION SUCCESS
- MISSION PERFORMANCE
- COST
- CONTRIBUTION TO LATER MISSIONS
- ADDITIONAL 1971 CAPABILITY

CONTRIBUTION TO LATER MISSIONS

SYSTEM	1975/77 OI ΔV, KPS
LEMDE	1.52
TRANSTAGE	1.28
SOLID + MC/OT	
ALUMINUM (MONO)	1.42
ALUMINUM (BIPROP)	1.52
BERYLLIUM (MONO)	1.49
BERYLLIUM (BIPROP)	1.59

SELECTION CRITERIA

CONSTRAINTS

- PLANETARY QUARANTINE
- MINIMUM SCHEDULE RISK

COMPETING CHARACTERISTICS

- MISSION SUCCESS
- MISSION PERFORMANCE
- COST
- CONTRIBUTION TO LATER MISSIONS
- ADDITIONAL 1971 CAPABILITY

SELECTION SUMMARY

	CONFIGURATION G (SOLID)	CONFIGURATION L (MOD LEMDE)	CONFIGURATION Q (MOD TRANSTAGE)
CONSTRAINTS			
QUARANTINE	BEST	ACCEPTABLE	ACCEPTABLE
SCHEDULE	ACCEPTABLE	ACCEPTABLE	ACCEPTABLE
CHARACTERISTICS			
MISSION SUCCESS	BEST OVERALL	ACCEPTABLE	ACCEPTABLE
MISSION PERF.	MEETS GOALS	MEETS REQ'TS	MEETS GOALS
COST	LOWEST	UNCERTAIN	ACCEPTABLE
LATER MISSIONS	ACCEPTABLE	ACCEPTABLE	ACCEPTABLE
ADD'L '71 CAPAB.	AMPLE	AMPLE	AMPLE

SELECTED CONFIGURATION

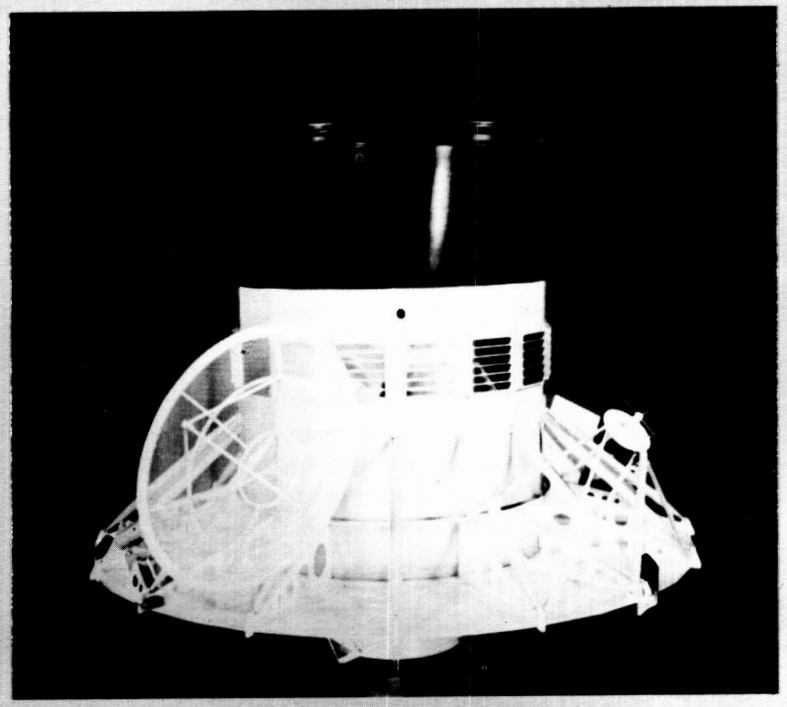

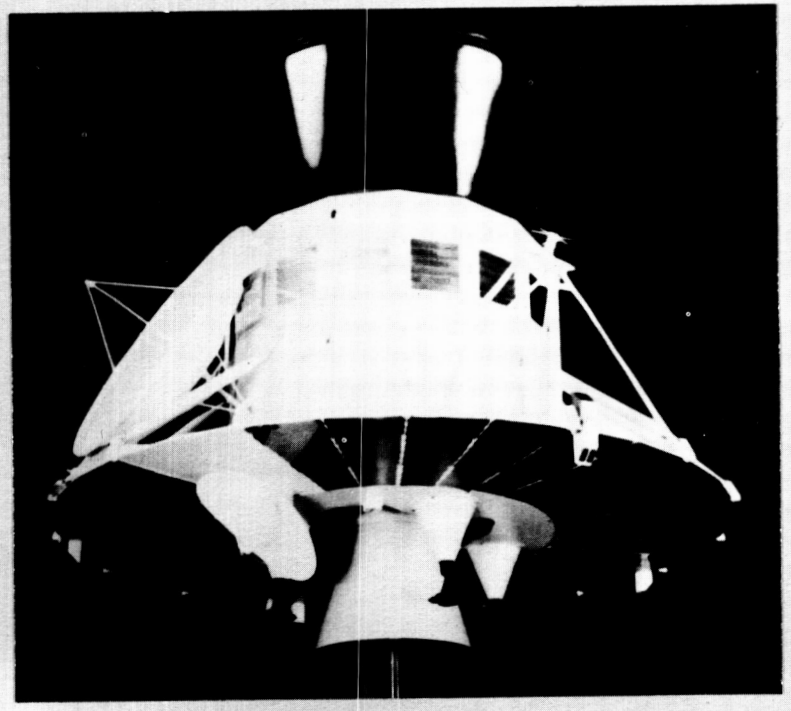

TRAJECTORY AND ORBIT SELECTION

W. E. JOHNSTON

DESIGN TRAJECTORIES

HELIOCENTRIC TRAJECTORY

• LAUNCH PERIOD		4/28-6/28/71
• ARRIVAL	FIRST	11/ 1 -11/17/ 71
	SECOND	11/11 -11/27/ 71

MARS ORBIT

• SIZE	1,000 x 10,000 KM
• INCLINATION	60°
• LINE OF APSIDES:	CAPSULE IMPACT 20° FROM EVENING TERMINATOR-FIRST ORBITING DAY RELEASE

CAPSULE DE-ORBIT TRAJECTORY

• DE-ORBIT	230° TRUE ANOMALY
• ENTRY ANGLE	16°
• VELOCITY INCREMENT	217 MPS
• THRUSTING DIRECTION	124°

TRAJECTORY PROBLEMS

- TIME OF FLIGHT ADJUSTMENT
- ORBIT INSERTION
- CAPSULE SEPARATION
- RELAY COMMUNICATION PARAMETERS
- ORBIT TRIM REQUIREMENTS

TRAJECTORY PROBLEMS

- TIME OF FLIGHT ADJUSTMENT
- ORBIT INSERTION
- CAPSULE SEPARATION
- RELAY COMMUNICATION PARAMETERS
- ORBIT TRIM REQUIREMENTS

TIME OF FLIGHT SENSITIVITY 1971 MISSION

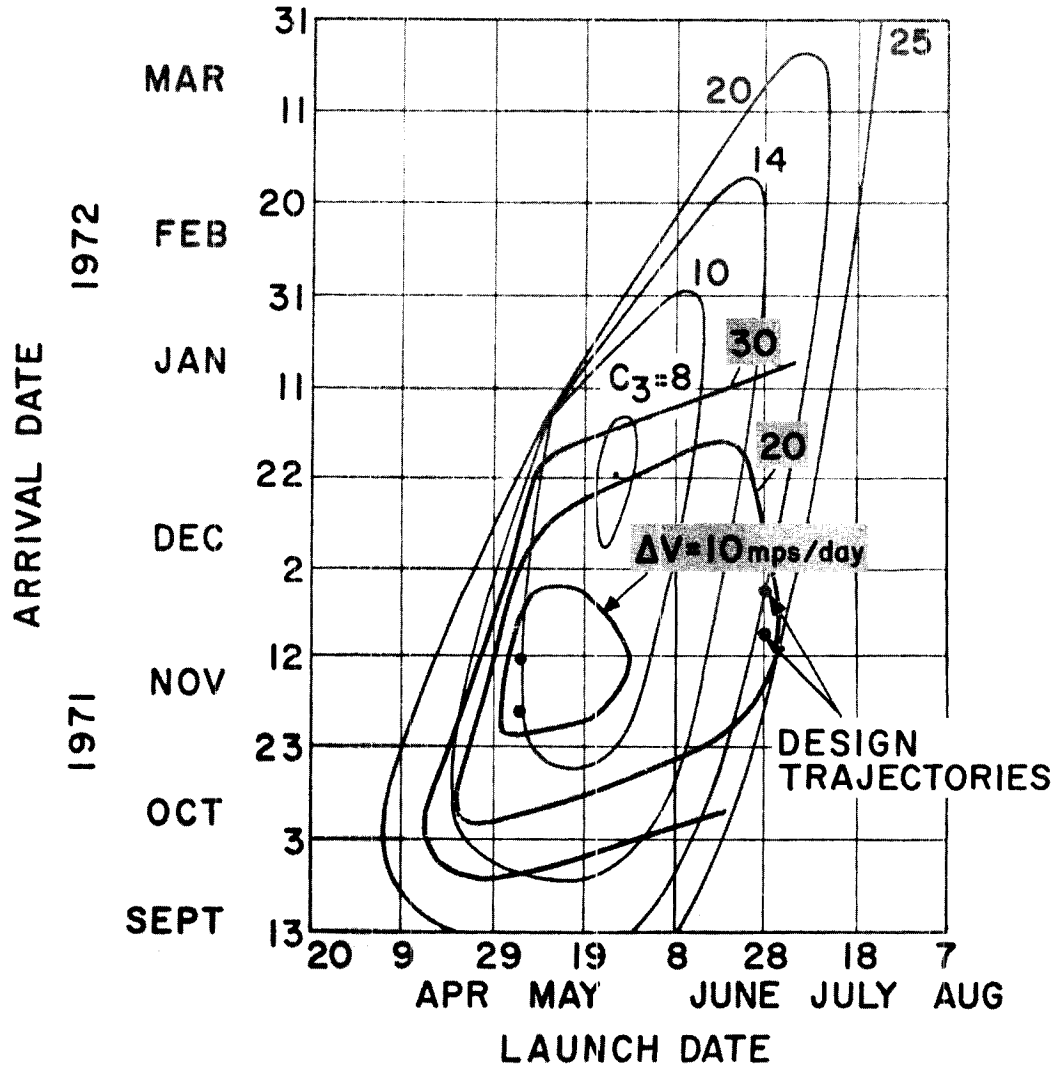

TIME OF FLIGHT SENSITIVITY 1973 MISSION

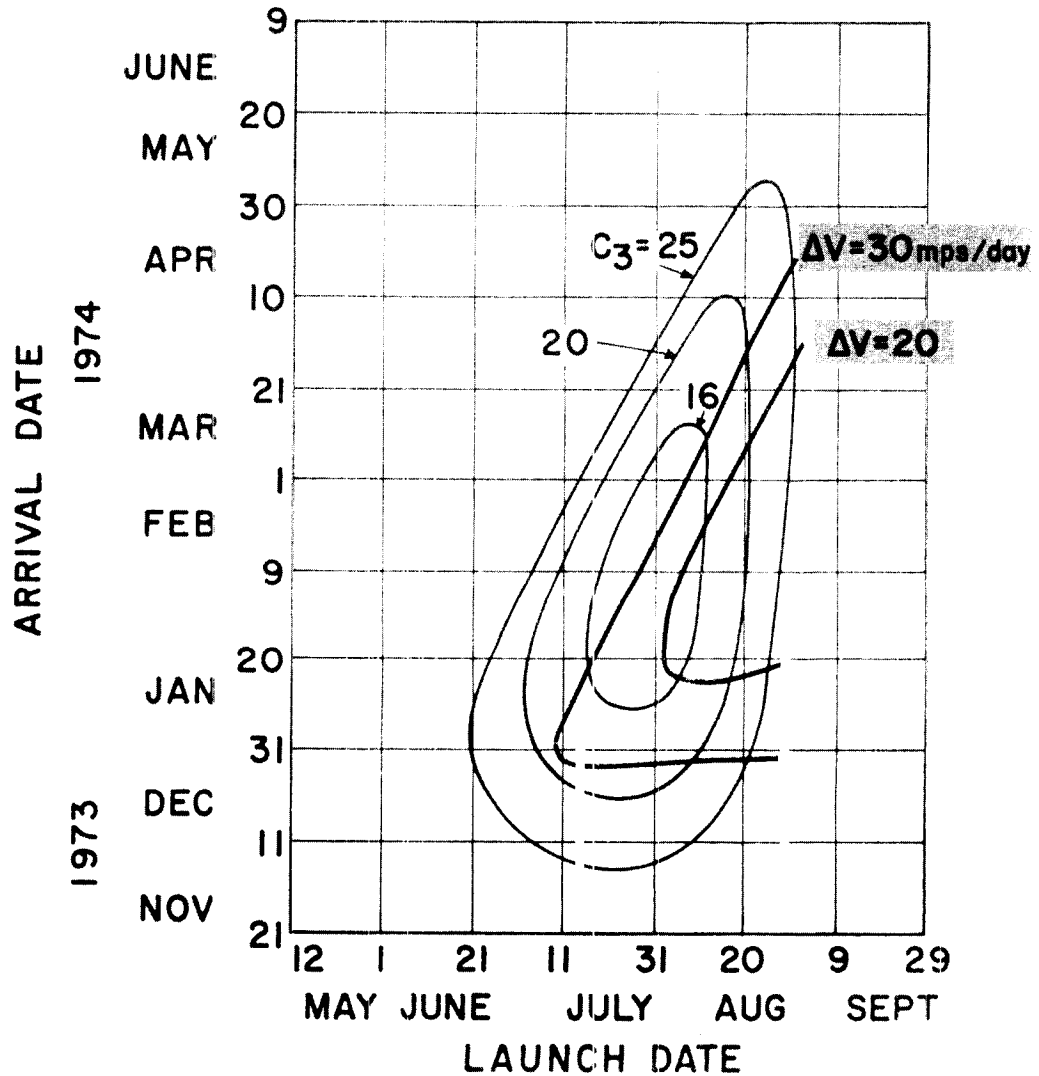

1973 TIME OF FLIGHT ADJUSTMENT

- LIMITED LAUNCH PERIOD
- HIGH VELOCITY INCREMENT
- HIGH MIDCOURSE MANEUVER ERRORS

TRAJECTORY PROBLEMS

- TIME OF FLIGHT ADJUSTMENT
- ORBIT INSERTION
- CAPSULE SEPARATION
- RELAY COMMUNICATION PARAMETERS
- ORBIT TRIM REQUIREMENTS

ORBIT INSERTION

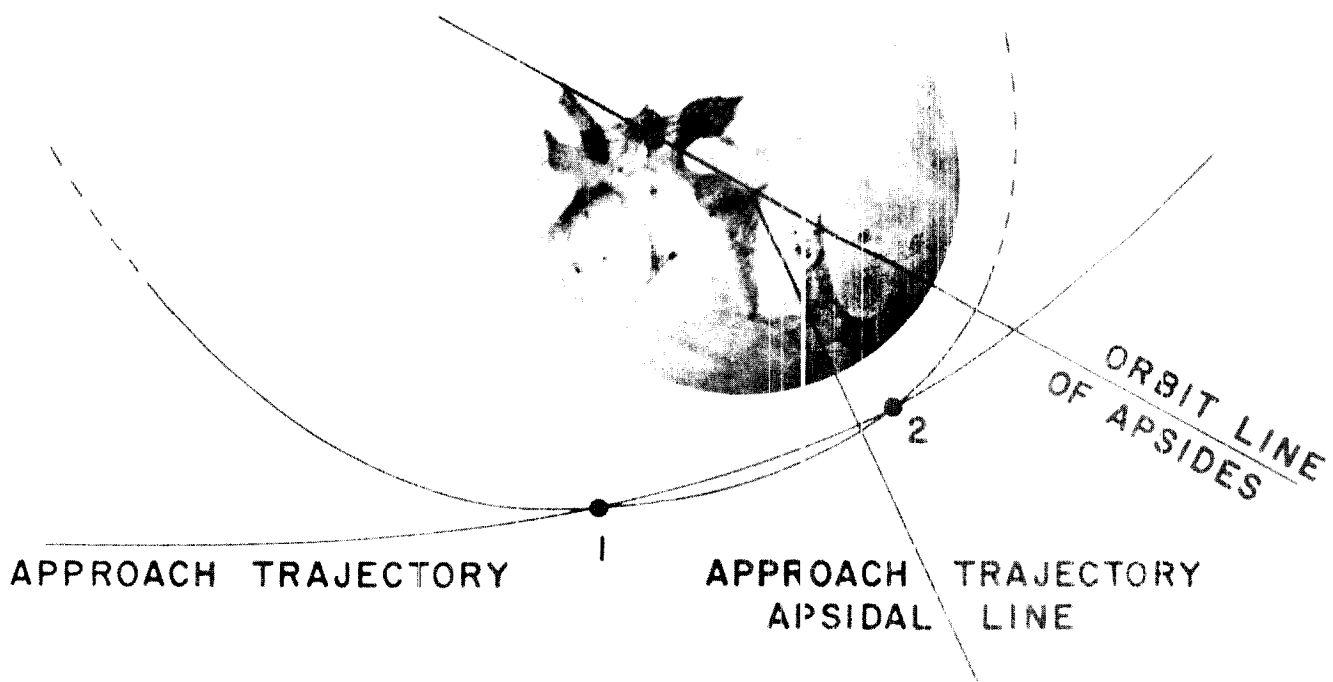

ORBIT INSERTION LOCATION

	POINT 1	POINT 2
ORBIT ERRORS		
• PERIAPSIS	316 KM	260 KM
• LINE OF APSIDES	4.83°	4.31°
• PERIOD	1.3 HR.	0.9 HR.
APPROACH HYPERBOLA		
• PERIAPSIS	1010 KM	953 KM
PLANETARY QUARANTINE		
• CONTROL MALFUNCTION	IMPACT	220 KM (PERIAPSIS)
• PROPULSION EJECTA	POOR	GOOD

TRAJECTORY PROBLEMS

- TIME OF FLIGHT ADJUSTMENT
- ORBIT INSERTION
- CAPSULE SEPARATION
- RELAY COMMUNICATION PARAMETERS
- ORBIT TRIM REQUIREMENTS

CAPSULE DE-ORBIT TRAJECTORY

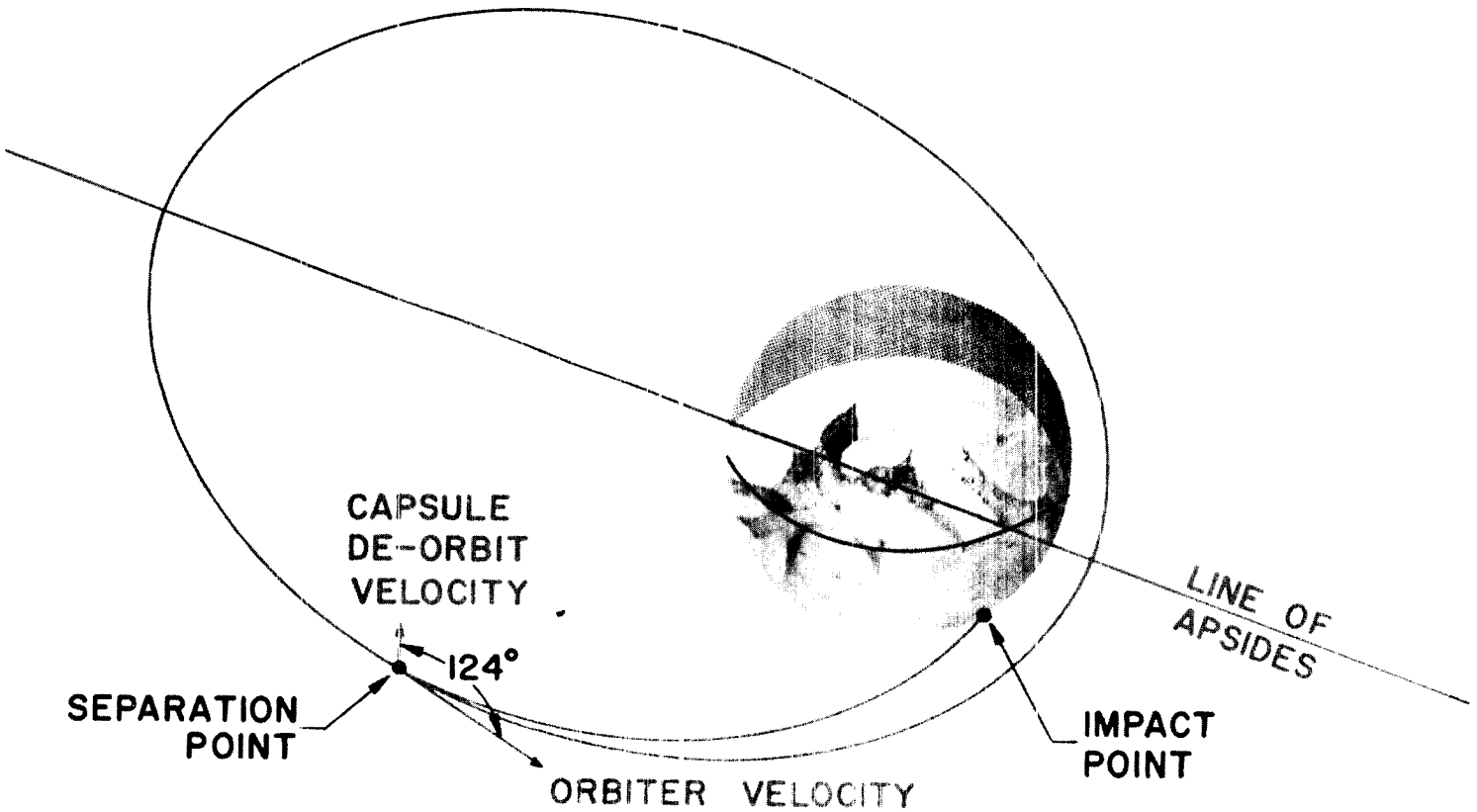

CAPSULE IMPACT DISPERSION

- ERROR SOURCES
  - ORBIT PARAMETER UNCERTAINTY
  - MARS GRAVITATIONAL CONSTANT
  - ATMOSPHERE PROFILE & DENSITY
  - SPACECRAFT ATTITUDE ERRORS
  - CAPSULE SEPARATION ERRORS
  - CAPSULE THRUSTING ERRORS

- EXPECTED DISPERSION (3 SIGMA)
  - 242 KM

TRAJECTORY PROBLEMS

- TIME OF FLIGHT ADJUSTMENT
- ORBIT INSERTION
- CAPSULE SEPARATION
- RELAY COMMUNICATION PARAMETERS
- ORBIT TRIM REQUIREMENTS

CAPSULE RELAY CONSIDERATIONS

- G = 10 LOG (ANTENNA GAIN) - 20 LOG(RANGE) $\geq$ -5 DB

- FIXED ANTENNA

CAPSULE – ORBITER RANGE

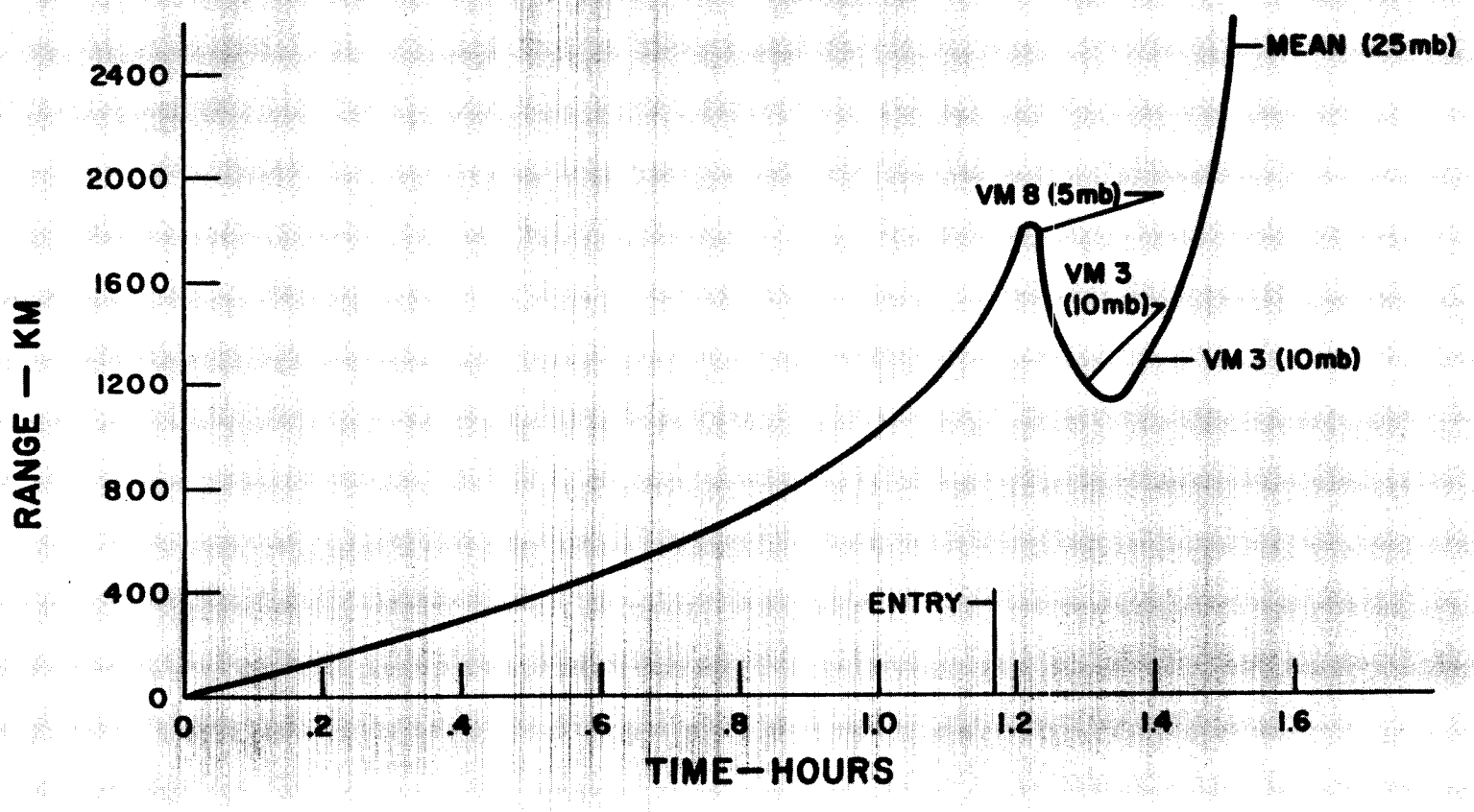

CAPSULE-ORBITER LINE-OF-SIGHT

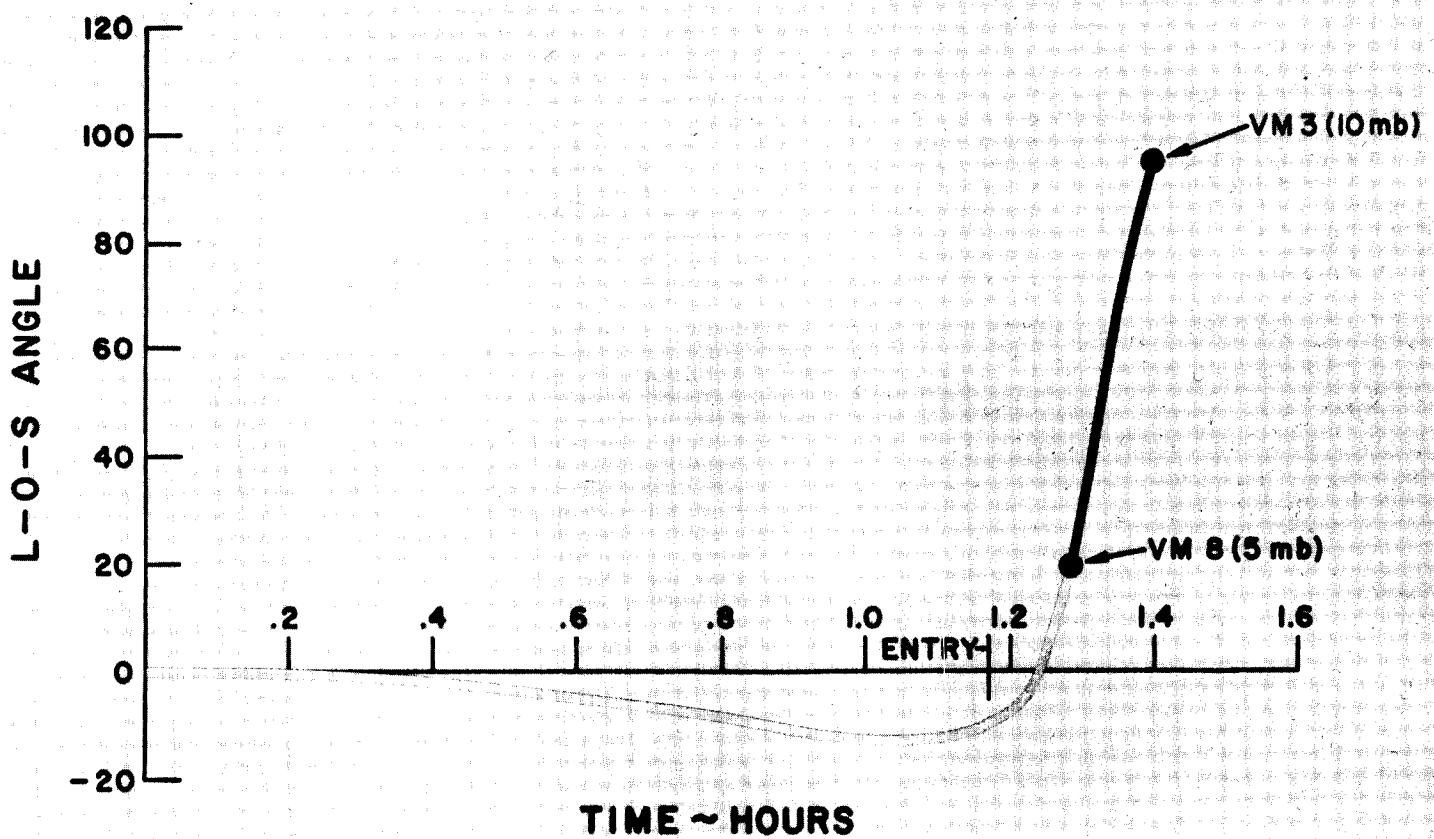

RELAY LINK PERFORMANCE PARAMETERS

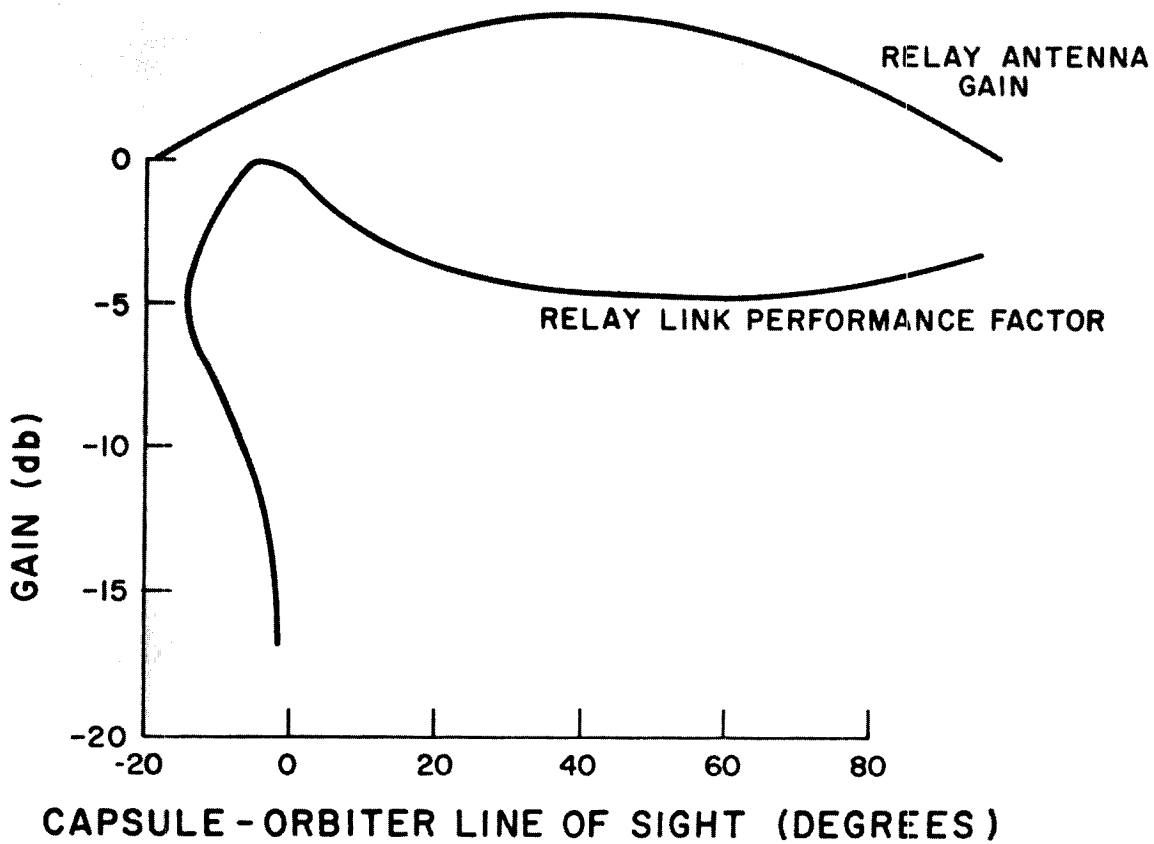

TRAJECTORY PROBLEMS

- TIME OF FLIGHT ADJUSTMENT
- ORBIT INSERTION
- CAPSULE SEPARATION
- RELAY COMMUNICATION PARAMETERS
- ORBIT TRIM REQUIREMENTS

CAPSULE ENTRY LOCATION

ORBIT		ENTRY LOCATION		ENTRY LOCATION	
PERIAPSIS KM	APOAPSIS KM	20° ENTRY	VACUUM GRAZE	20° ENTRY	VACUUM GRAZE
1300	13,000	318	338	314	336
700	8,000	313	337	307	334
		IN-PLANE VELOCITY INCREMENT 235 MPS		IN-PLANE VELOCITY INCREMENT 185 MPS	

CONCLUSIONS

- ALL CONSTRAINTS FULFILLED
- NO SPACECRAFT DESIGN BURDEN
- GOOD PLANET COVERAGE
- GOOD EXPERIMENT CONDITIONS
- HIGH PROBABILITY FOR ENTRY DATA RECEIPT
- ORBIT TRIM REQUIRES FURTHER STUDY

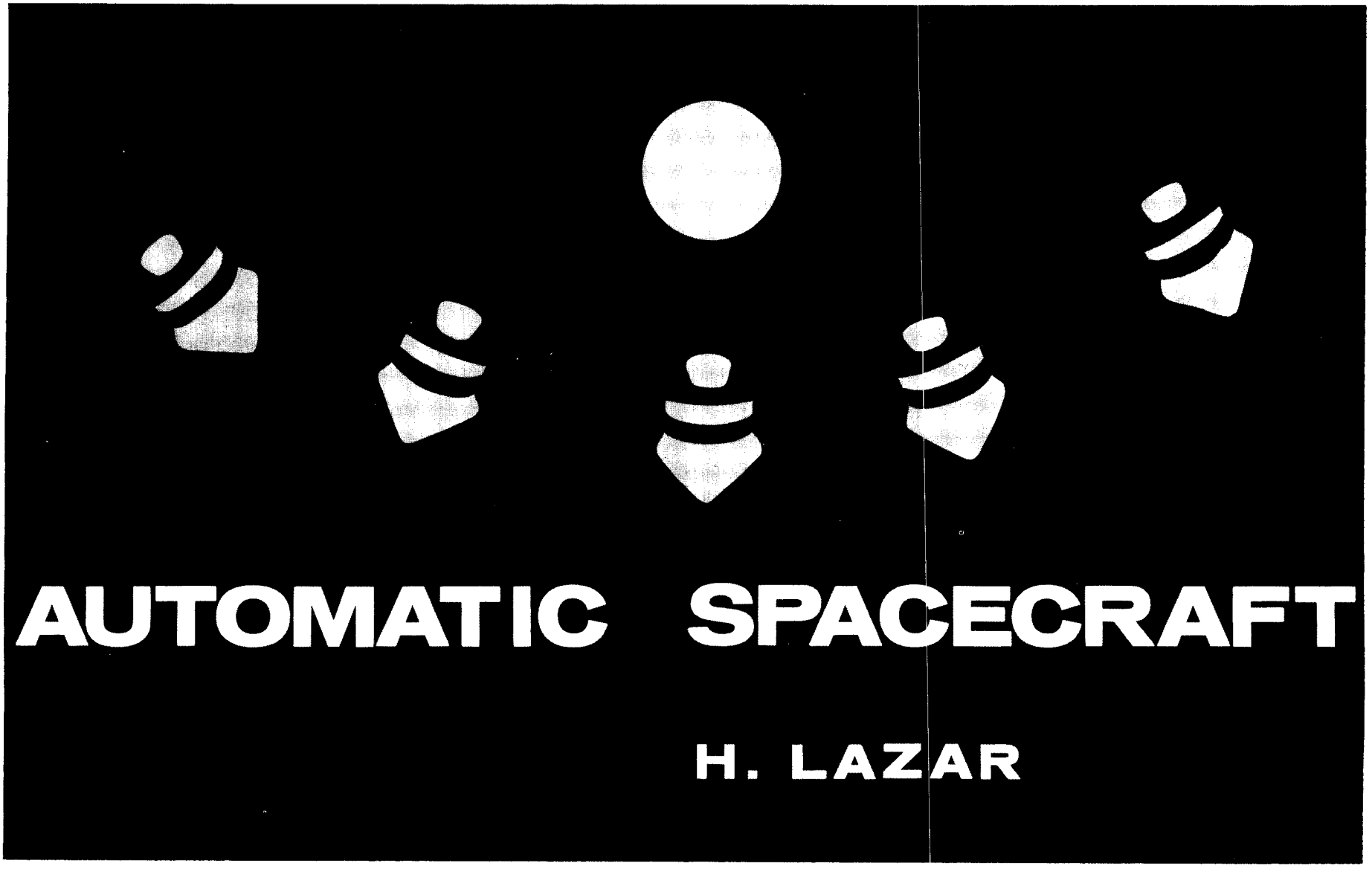
AUTOMATIC SPACECRAFT
H. LAZAR

VOYAGER

NOMINAL FLIGHT

NO

TRAJECTORY CORRECTIONS

TIME-DEPENDENT UPDATE

TRAJECTORY-DEPENDENT UPDATE

SYSTEM MALFUNCTIONS

ONBOARD SEQUENCING

NOMINAL SEQUENCE

- INITIAL STABILIZATION
- CRUISE
- ORBIT INSERT
- CAPSULE SEPARATION
- ORBIT OPERATION

CONTINGENCY MODE FEATURES

- TRAJECTORY ADJUST
- ORBIT TRIM
- BACKUP

GROUND COMMAND

SEQUENCE MODIFICATION

(C&S LOADING)

FAULT SWITCHING

AUTOMATIC FEATURES

- ATTITUDE CONTROL
- VOLTAGE REGULATION
- TEMPERATURE CONTROL

AUTOMATIC FEATURES

ATTITUDE CONTROL

VOLTAGE REGULATION

TEMPERATURE CONTROL

CANOPUS ACQUISITION

OCCULTATION MODE SWITCHING

SCIENCE SEQUENCING

ANTENNA & SCIENCE ARTICULATION

AUTOMATIC FEATURES

ATTITUDE CONTROL

VOLTAGE REGULATION

TEMPERATURE CONTROL

CANOPUS ACQUISITION

OCCULTATION MODE SWITCHING

SCIENCE SEQUENCING

ANTENNA & SCIENCE ARTICULATION

CANOPUS ACQUISITION

SUN ACQUISITION

CANOPUS SEARCH

CANOPUS ENCOUNTER

COMMAND OVERRIDE

MARINER PROCEDURE

AUTOMATIC FEATURES

ATTITUDE CONTROL

VOLTAGE REGULATION

TEMPERATURE CONTROL

CANOPUS ACQUISITION

OCCULTATION MODE SWITCHING

SCIENCE SEQUENCING

ANTENNA & SCIENCE ARTICULATION

OCCULTATION MODE SWITCHING-SUN

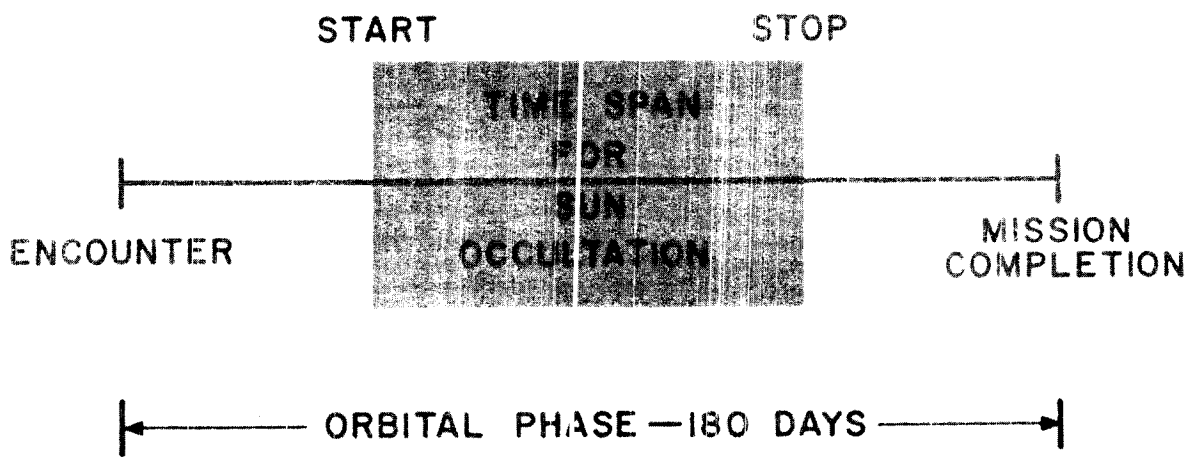

MISSION TIME

OCCULTATION MODE SWITCHING-CANOPUS

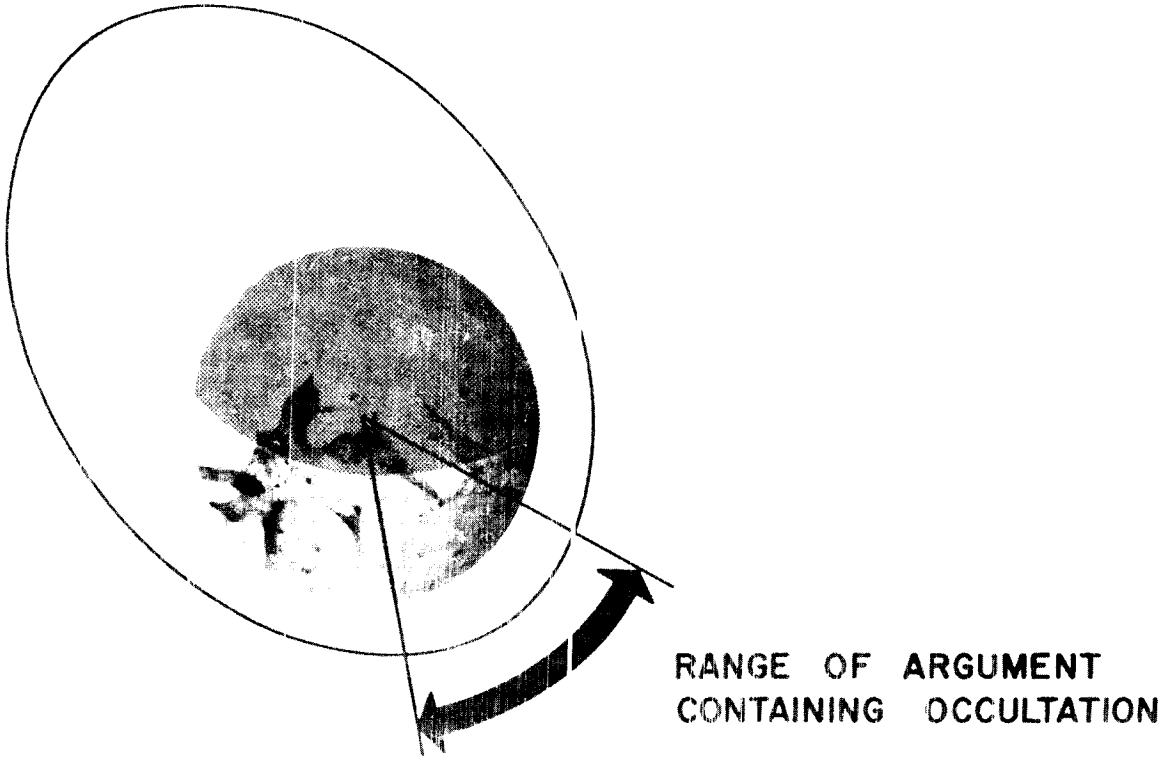

OCCULTATION MODE SWITCHING-EARTH

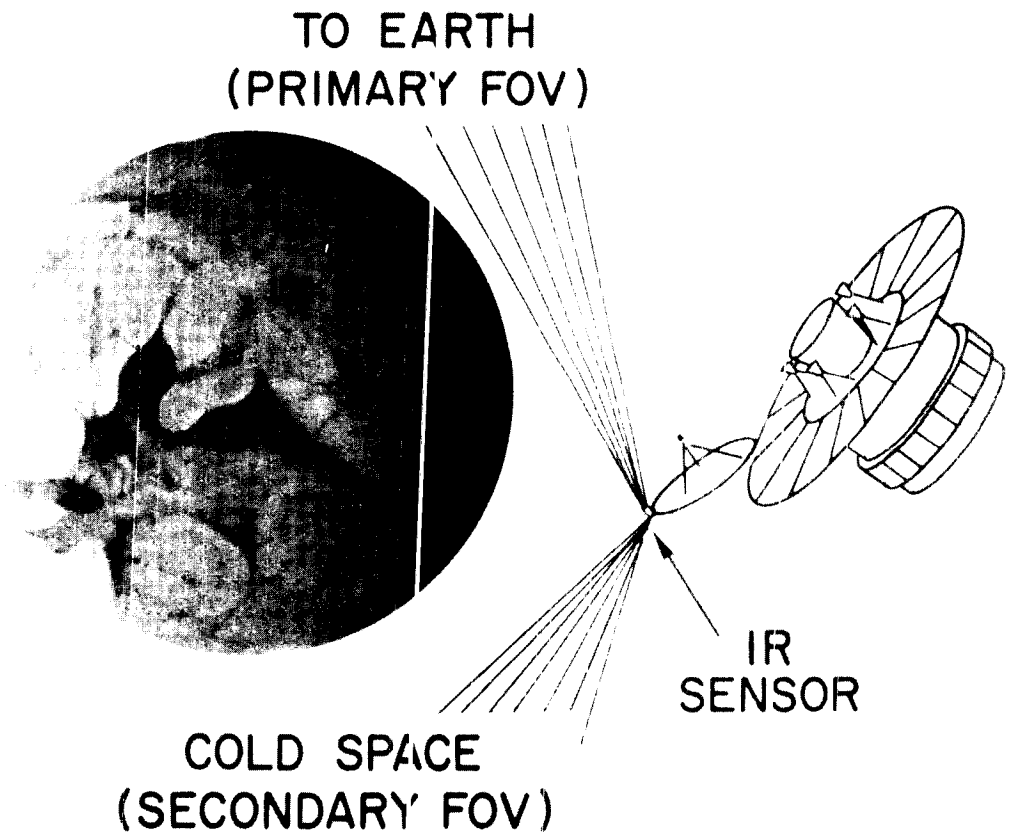

AUTOMATIC FEATURES

ATTITUDE CONTROL

VOLTAGE REGULATION

TEMPERATURE CONTROL

CANOPUS ACQUISITION

OCCULTATION MODE SWITCHING

SCIENCE SEQUENCING

ANTENNA & SCIENCE ARTICULATION

SCIENCE SEQUENCING

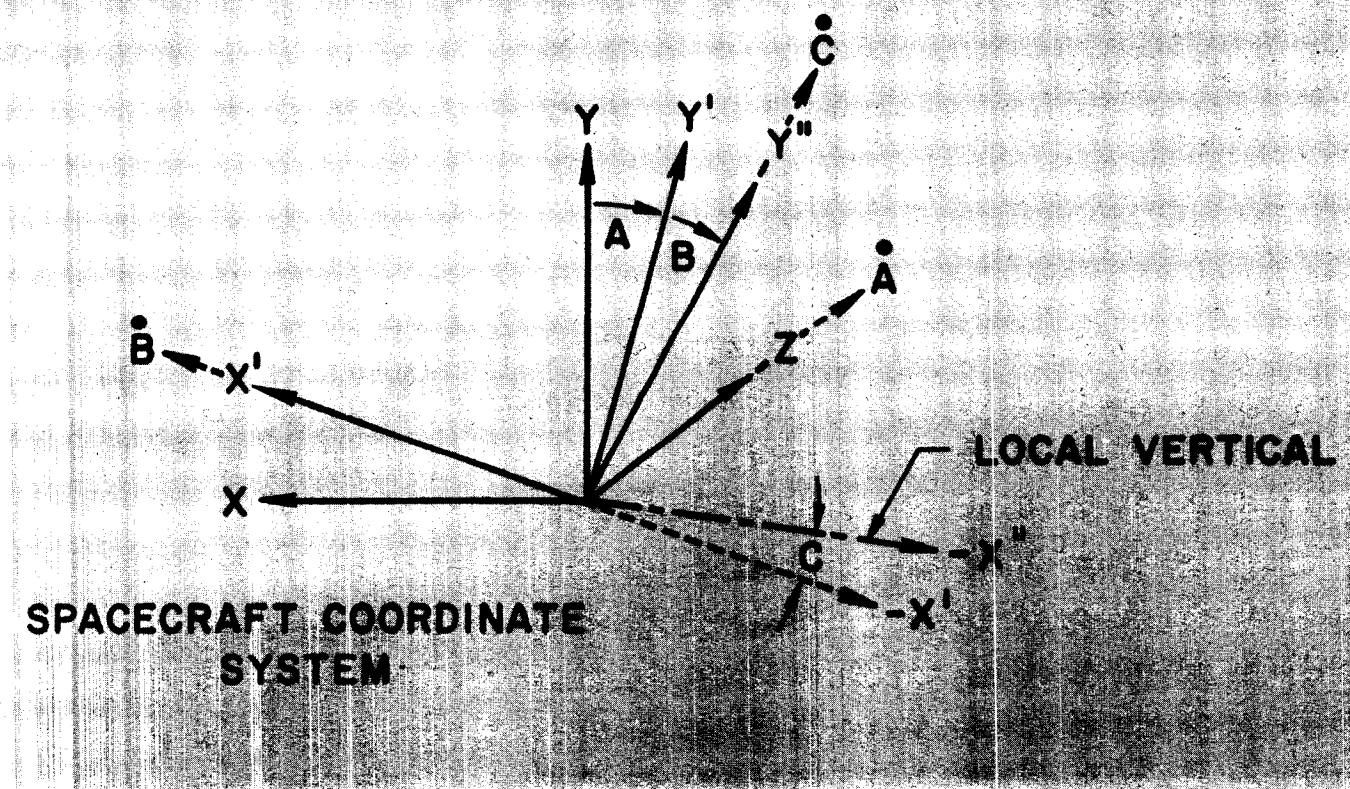

SCIENCE SEQUENCING

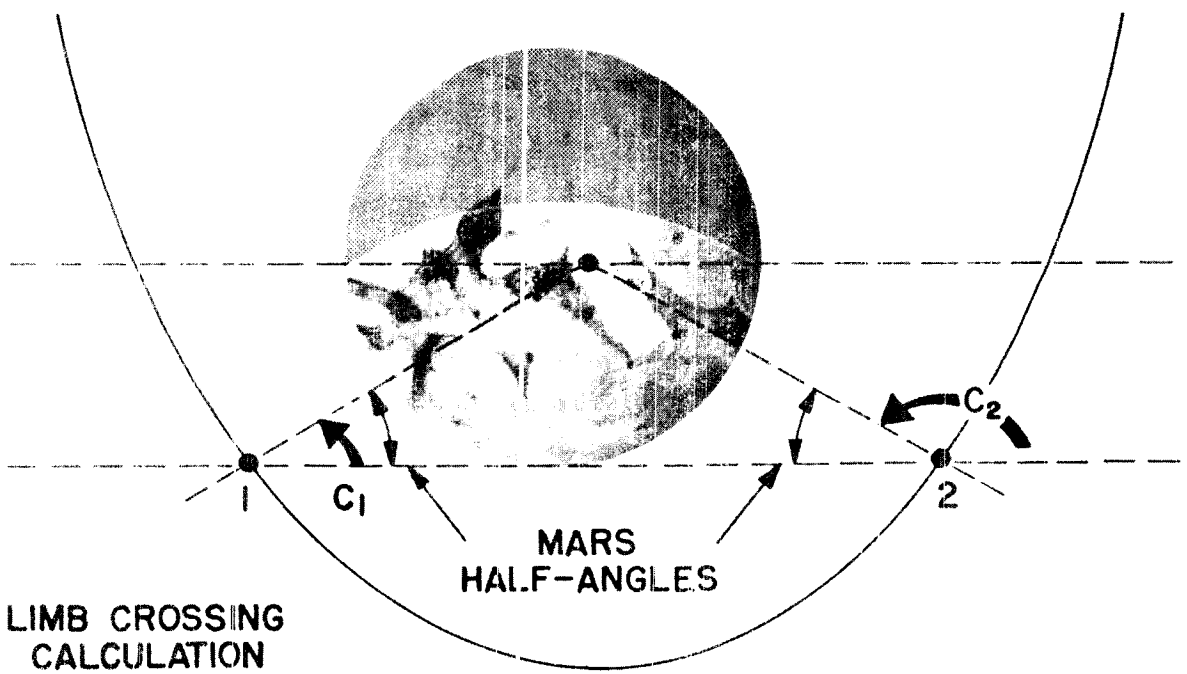

LIMB CROSSING
CALCULATION

AUTOMATIC FEATURES

ATTITUDE CONTROL

VOLTAGE REGULATION

TEMPERATURE CONTROL

CANOPUS ACQUISITION

OCCULTATION MODE SWITCHING

SCIENCE SEQUENCING

ANTENNA & SCIENCE ARTICULATION

ARTICULATION CONTROL

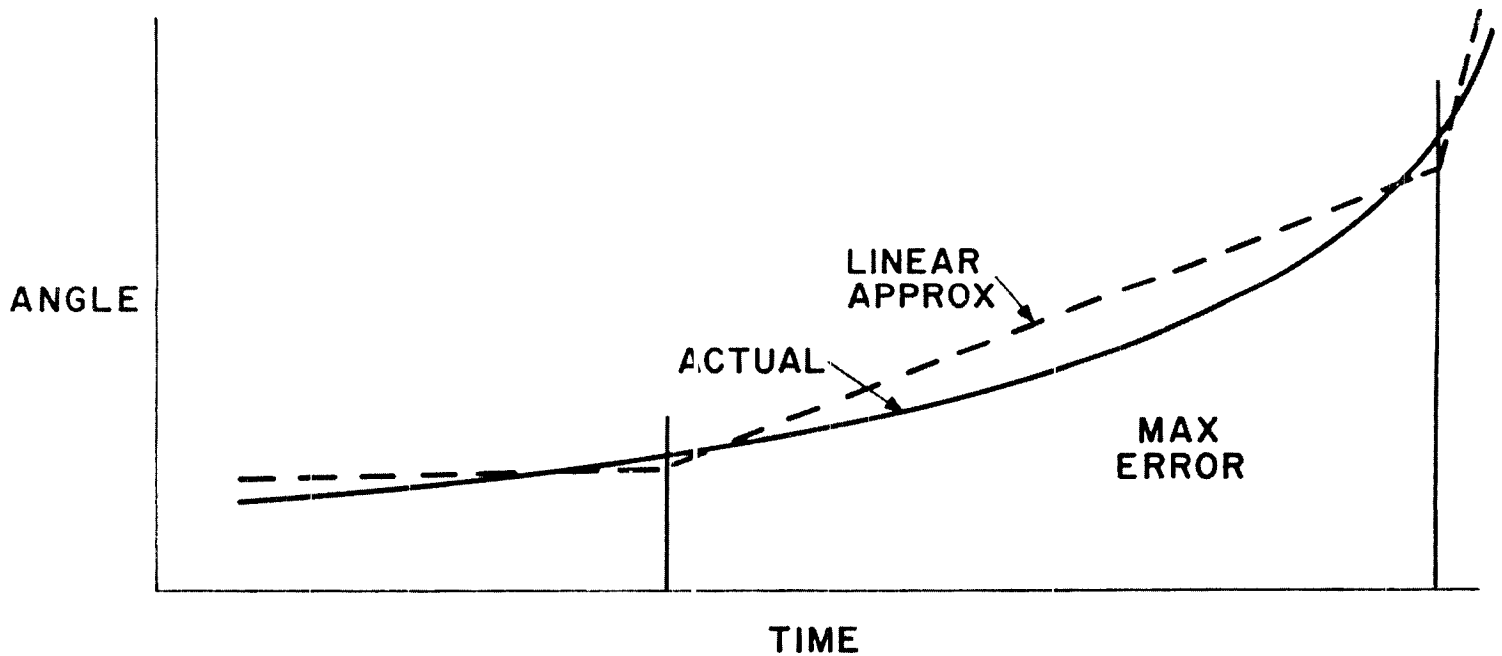

CRITICAL FUNCTIONS

- MANEUVER TURNS
- MC ENGINE FIRING
- OI ENGINE FIRING
- OT ENGINE FIRING
- CAPSULE SEPARATION
- SCIENCE DEPLOYMENT

C & S FUNCTIONS

- TIME-AND-FUNCTION CRITICAL
- FUNCTION CRITICAL
- NON-CRITICAL

C & S FEATURES

- SINGLE PART FAILURE TOLERANT
- MINIMUM PIECE PARTS PER FUNCTION
- SEPARATE FUNCTION CIRCUITRY

AUTOMATIC SPACECRAFT

- VOYAGER HIGHLY AUTOMATIC
- C & S NOMINAL CONTROL
- COMMAND OVERRIDE
- C & S CONTINGENCY CONTROL
- C & S PIECE PART FAILURE TOLERANCE

TELECOMMUNICATIONS
E. NIEMANN

TELECOMMUNICATIONS

- TASK B DESIGN SUMMARY
- LAUNCH PHASE TRANSMISSION
- SCIENCE/ENGINEERING DATA MULTIPLEXING
- ERROR CONTROL CODING

TELECOMMUNICATIONS

- TASK B DESIGN SUMMARY
- LAUNCH PHASE TRANSMISSION
- SCIENCE/ENGINEERING DATA MULTIPLEXING
- ERROR CONTROL CODING

TELECOMMUNICATIONS SYSTEM

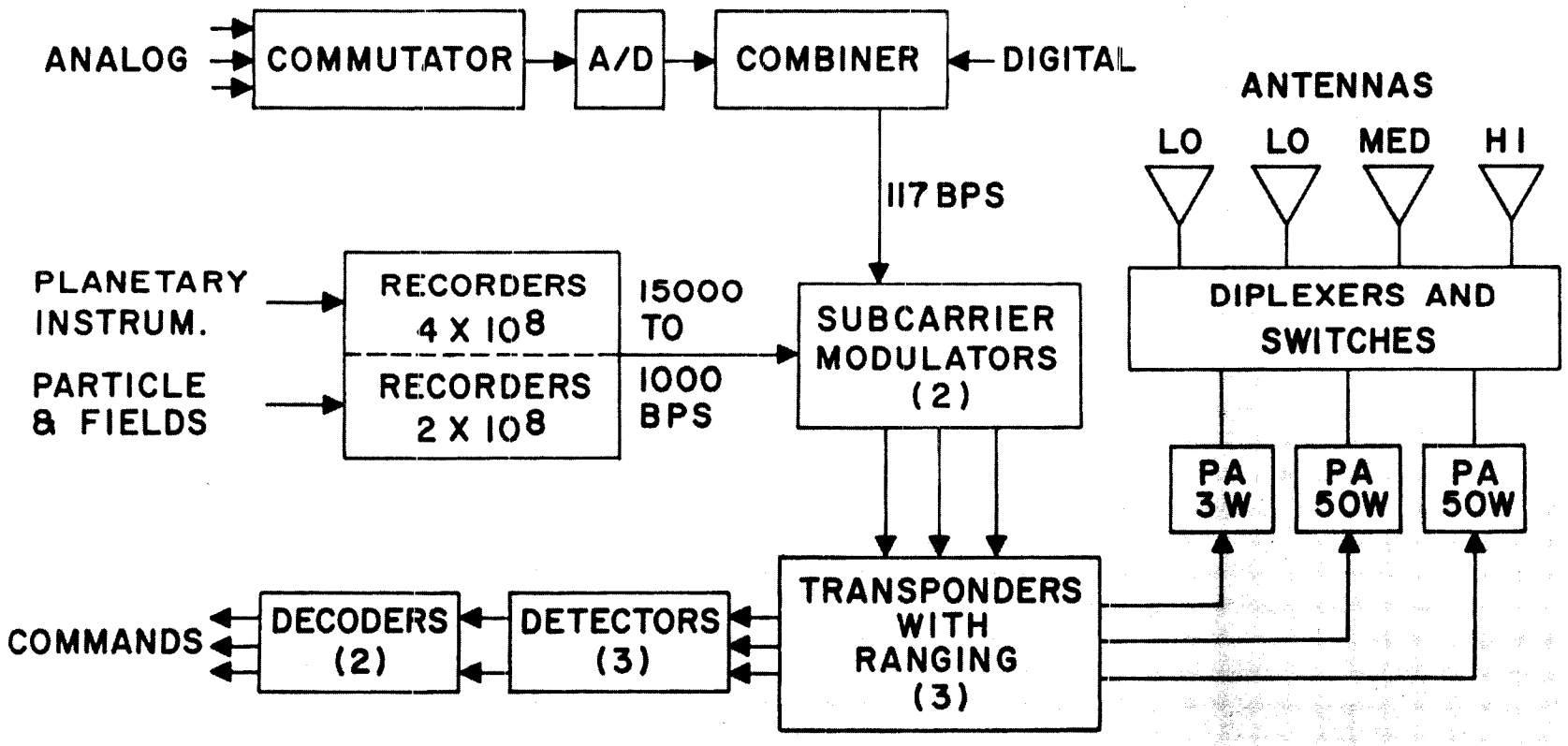

TELECOMMUNICATIONS SYSTEM

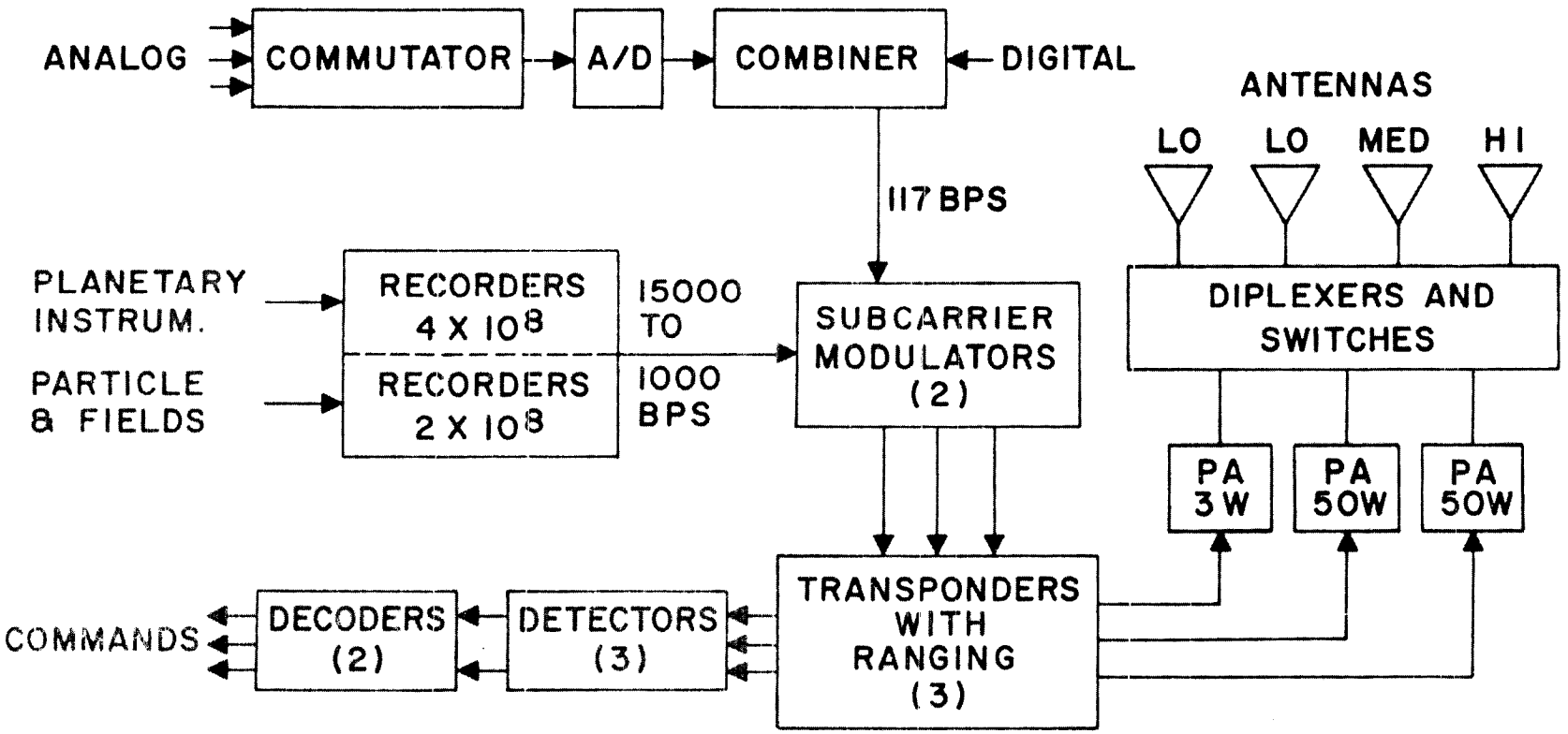

TELECOMMUNICATIONS SYSTEM

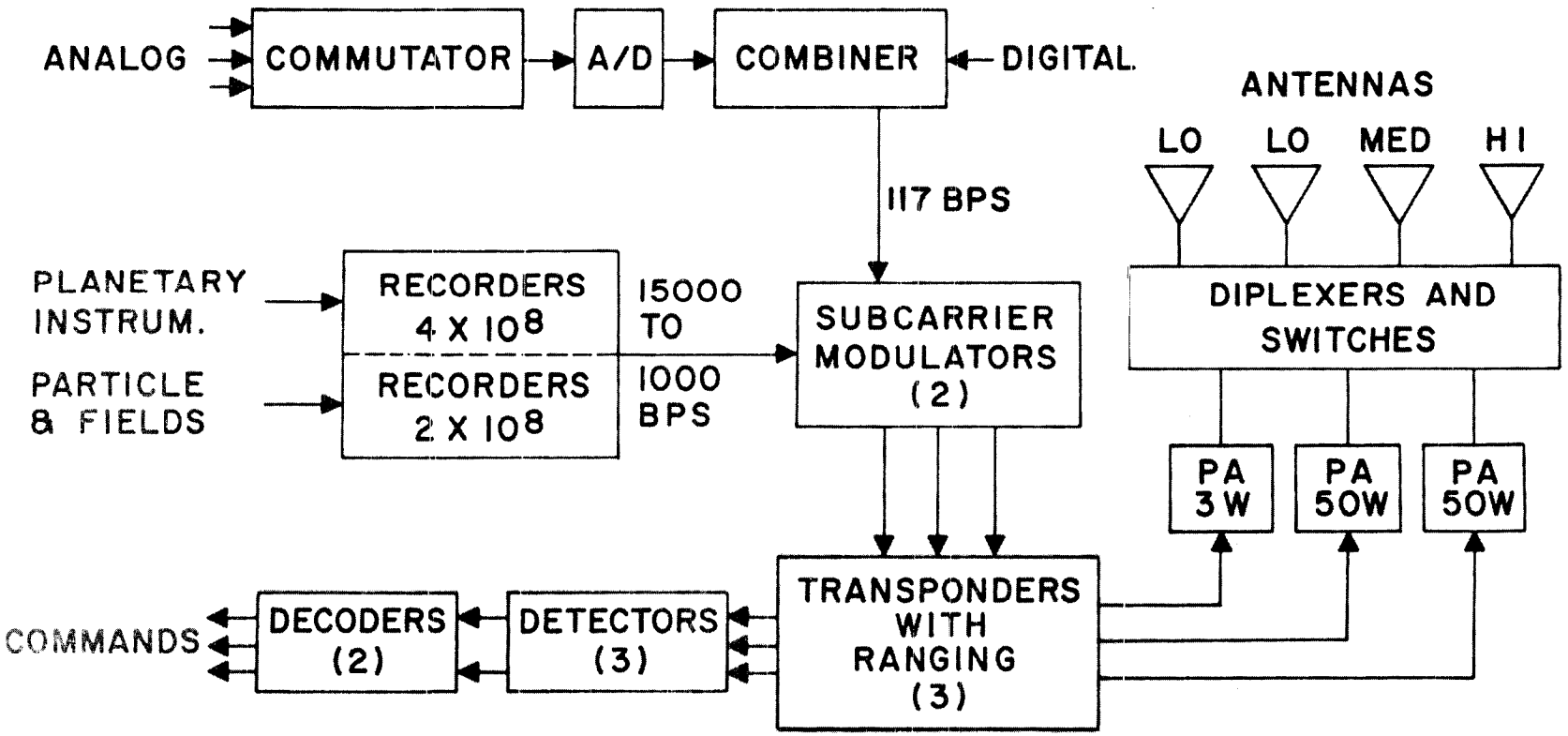

TELECOMMUNICATIONS SYSTEM

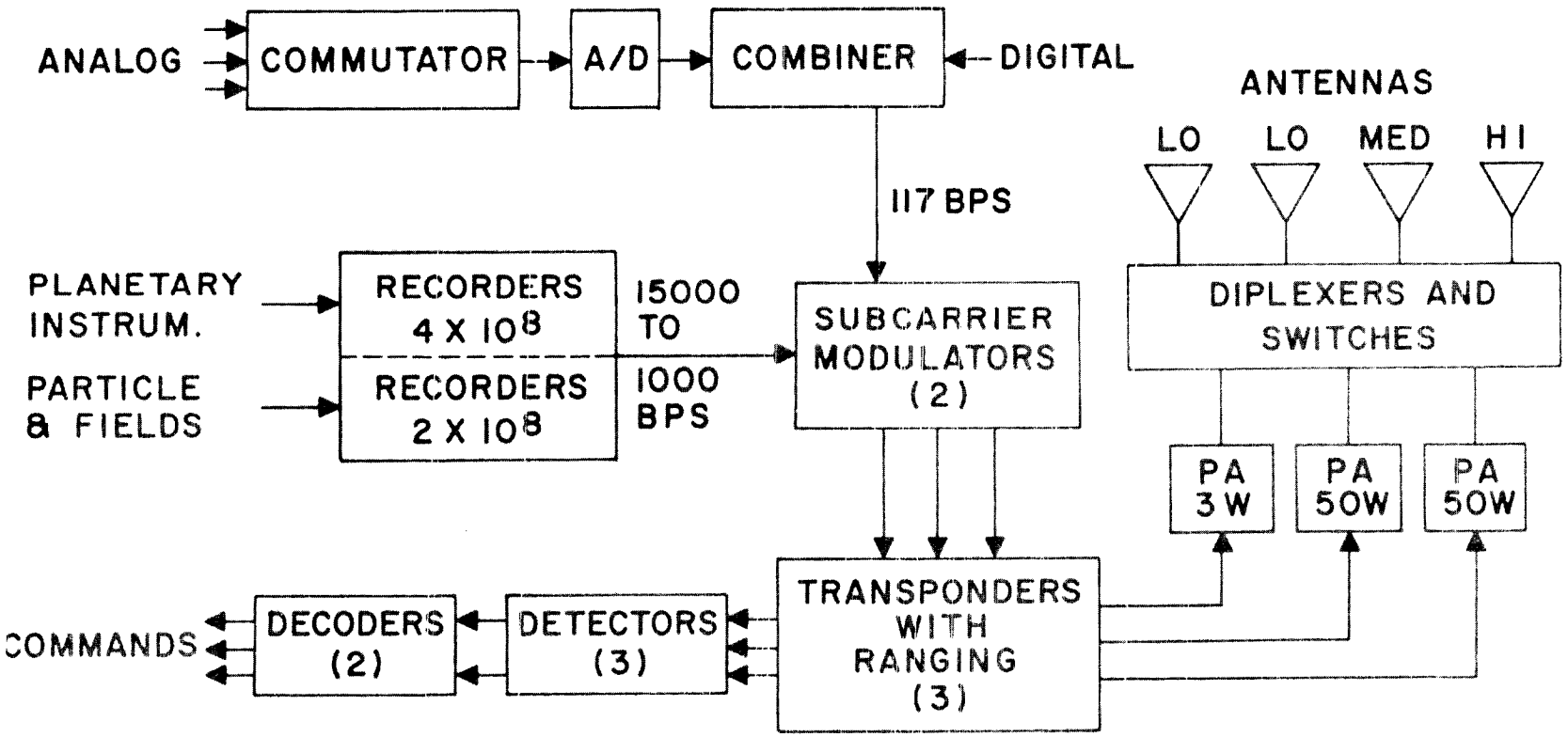

TELECOMMUNICATIONS SYSTEM

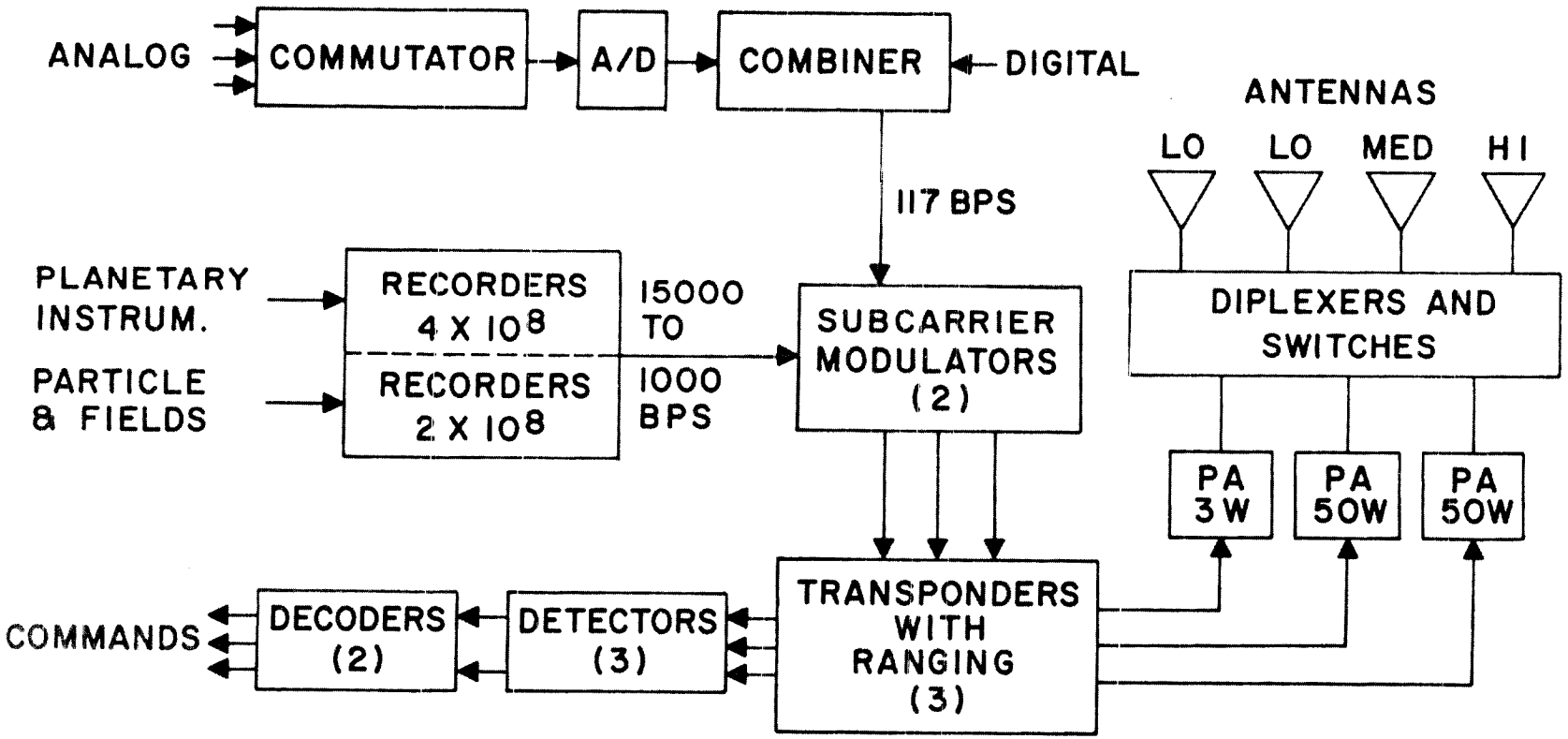

TELECOMMUNICATIONS

- TASK B DESIGN SUMMARY
- LAUNCH PHASE TRANSMISSION
- SCIENCE/ENGINEERING DATA MULTIPLEXING
- ERROR CONTROL CODING

LAUNCH TELEMETRY-TASK A

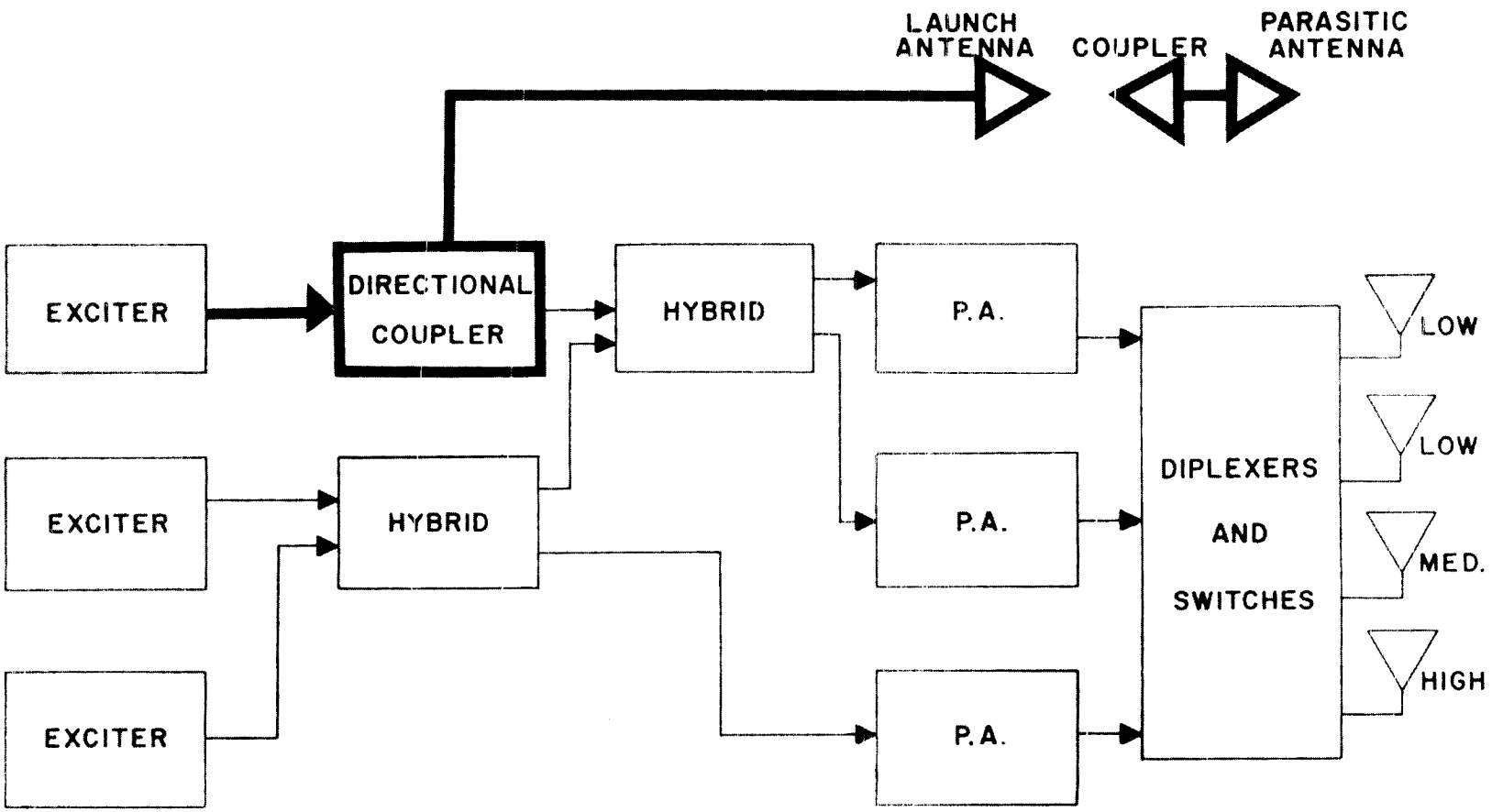

LAUNCH TRANSMISSION — TASK B

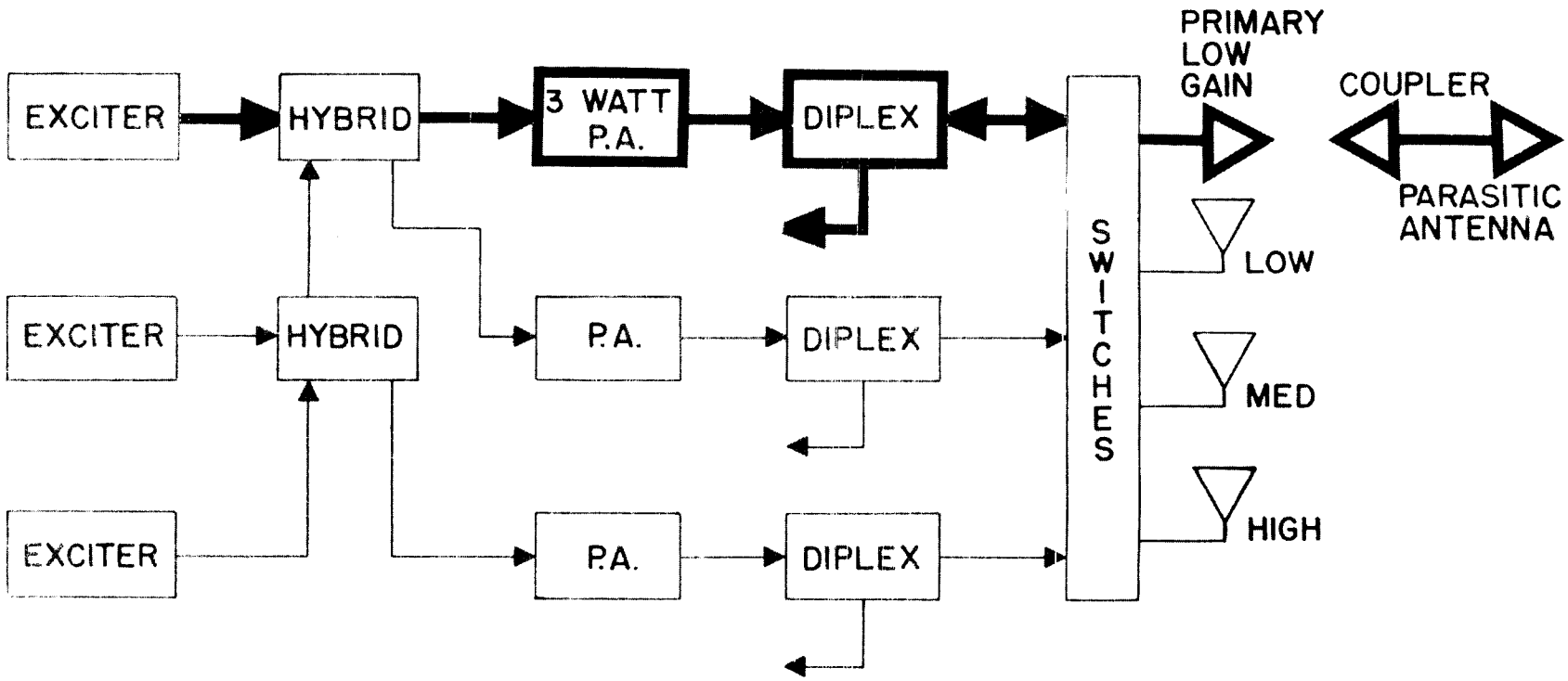

TELECOMMUNICATIONS

- TASK B DESIGN SUMMARY
- LAUNCH PHASE TRANSMISSION
- SCIENCE/ENGINEERING DATA MULTIPLEXING
- ERROR CONTROL CODING

TIME DIVISION MULTIPLEXING

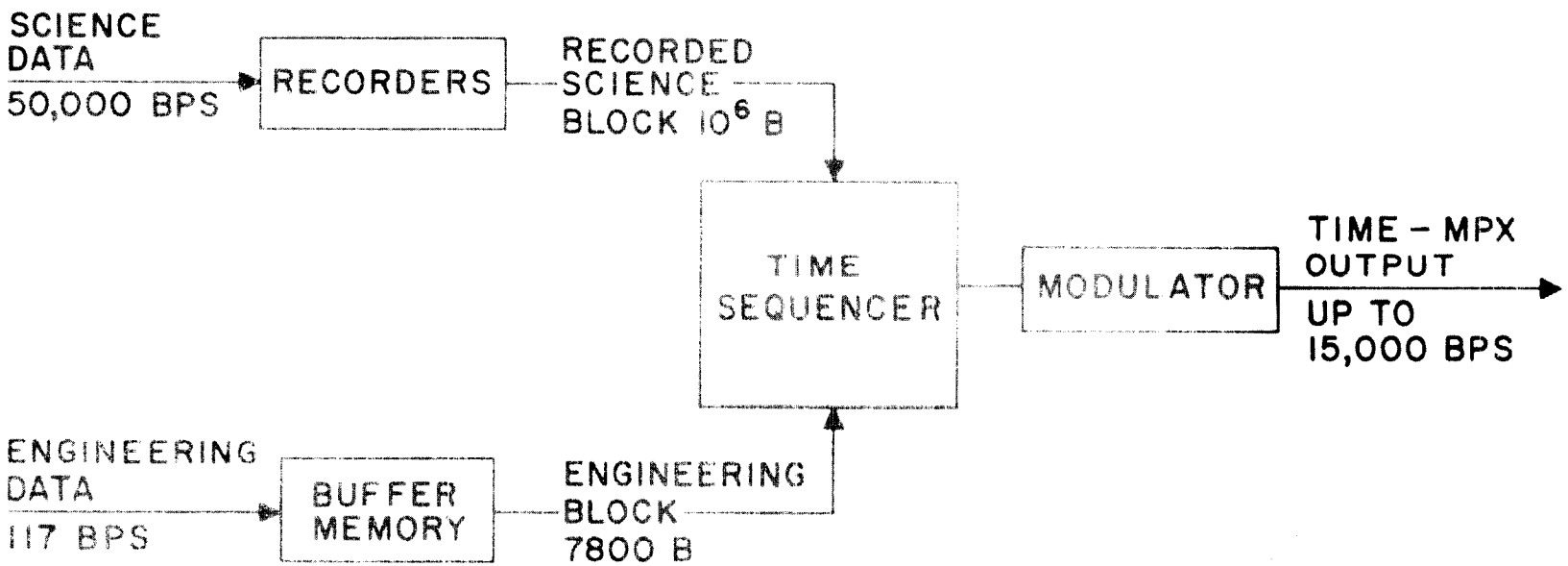

FREQUENCY DIVISION MULTIPLEXING

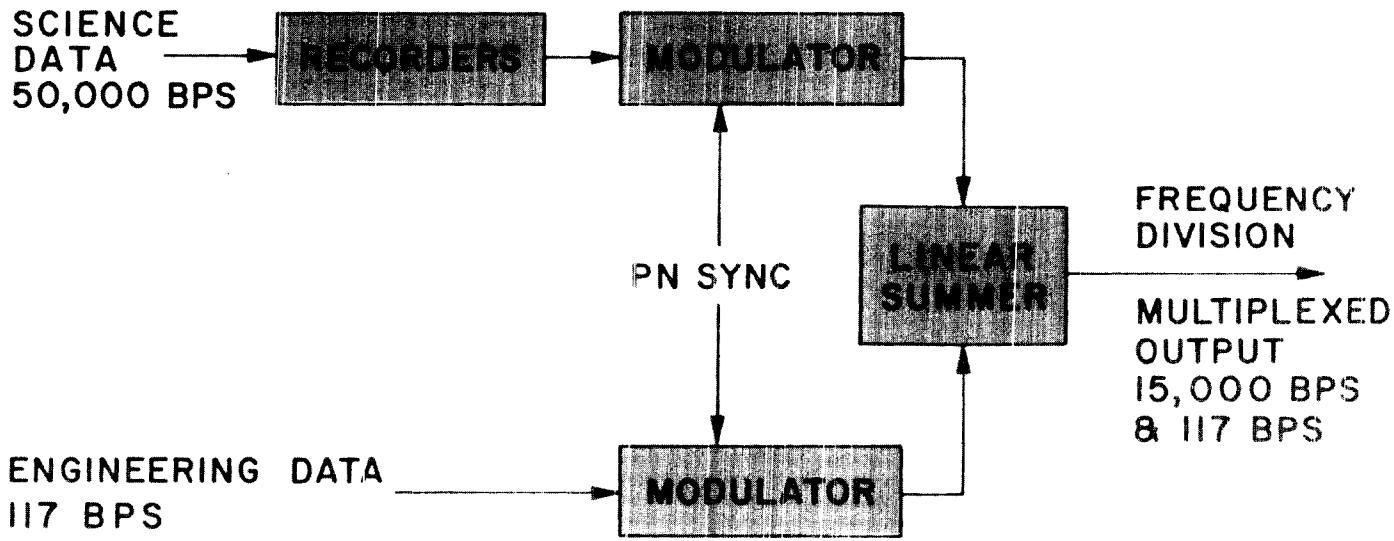

FREQUENCY DIVISION MULTIPLEXING

- CIRCUIT SIMPLICITY
- NO DATA "BLOCK" CONSTRAINTS
- INTERMODULATION LOSSES

TELECOMMUNICATIONS

- TASK B DESIGN SUMMARY
- LAUNCH PHASE TRANSMISSION
- SCIENCE/ENGINEERING DATA MULTIPLEXING
- ERROR CONTROL CODING

ERROR CONTROL CODING

- REGULAR BI-SIMPLEX
  7-BIT 63 DIGITS

- APPROXIMATES BI-ORTHOGONAL
  7-BIT 64 DIGITS

- IMPROVES PERFORMANCE

THRESHOLD	2.4 db
7-BIT SAMPLES	3.4 db

ERROR CONTROL CODING

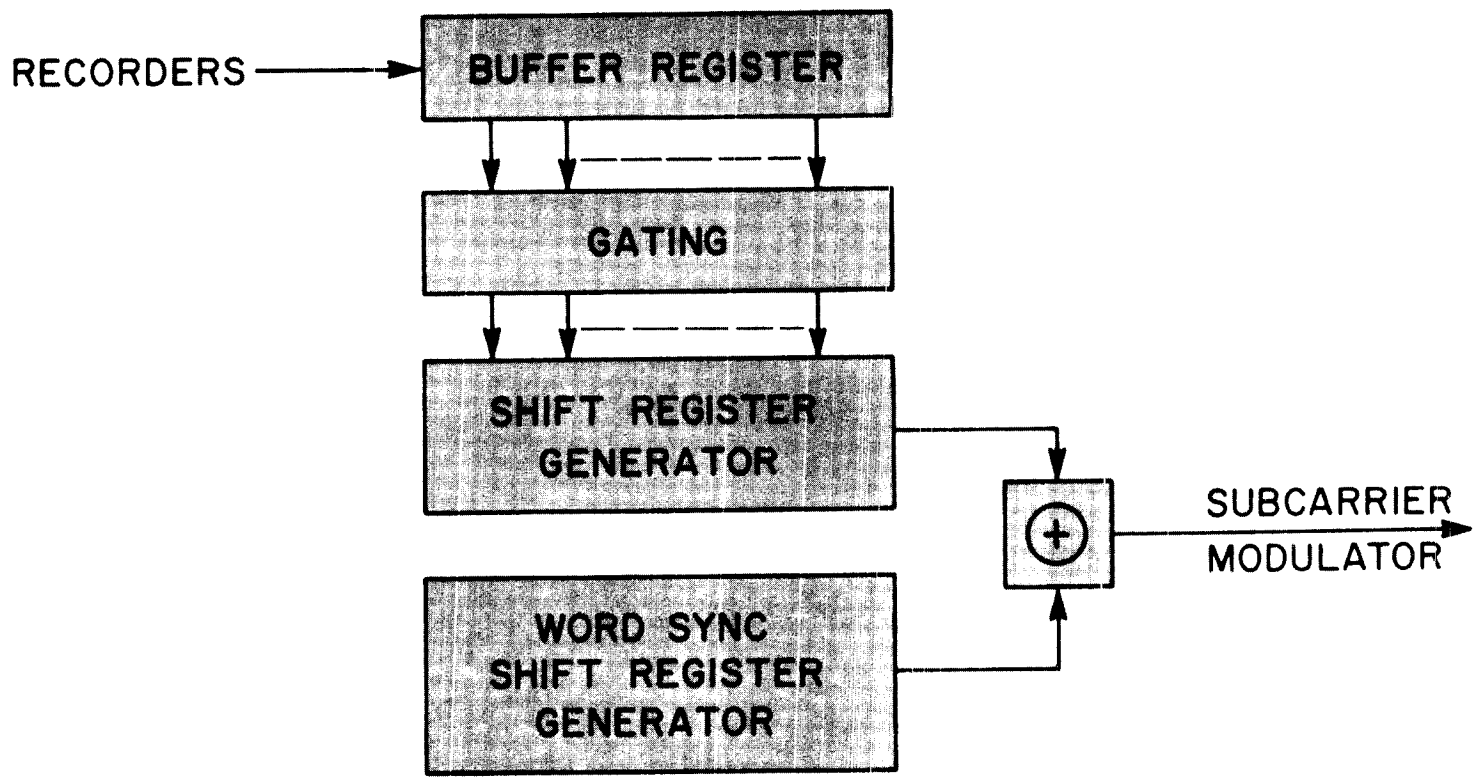

OS
L. BERGÈRE

COMPLEX 39

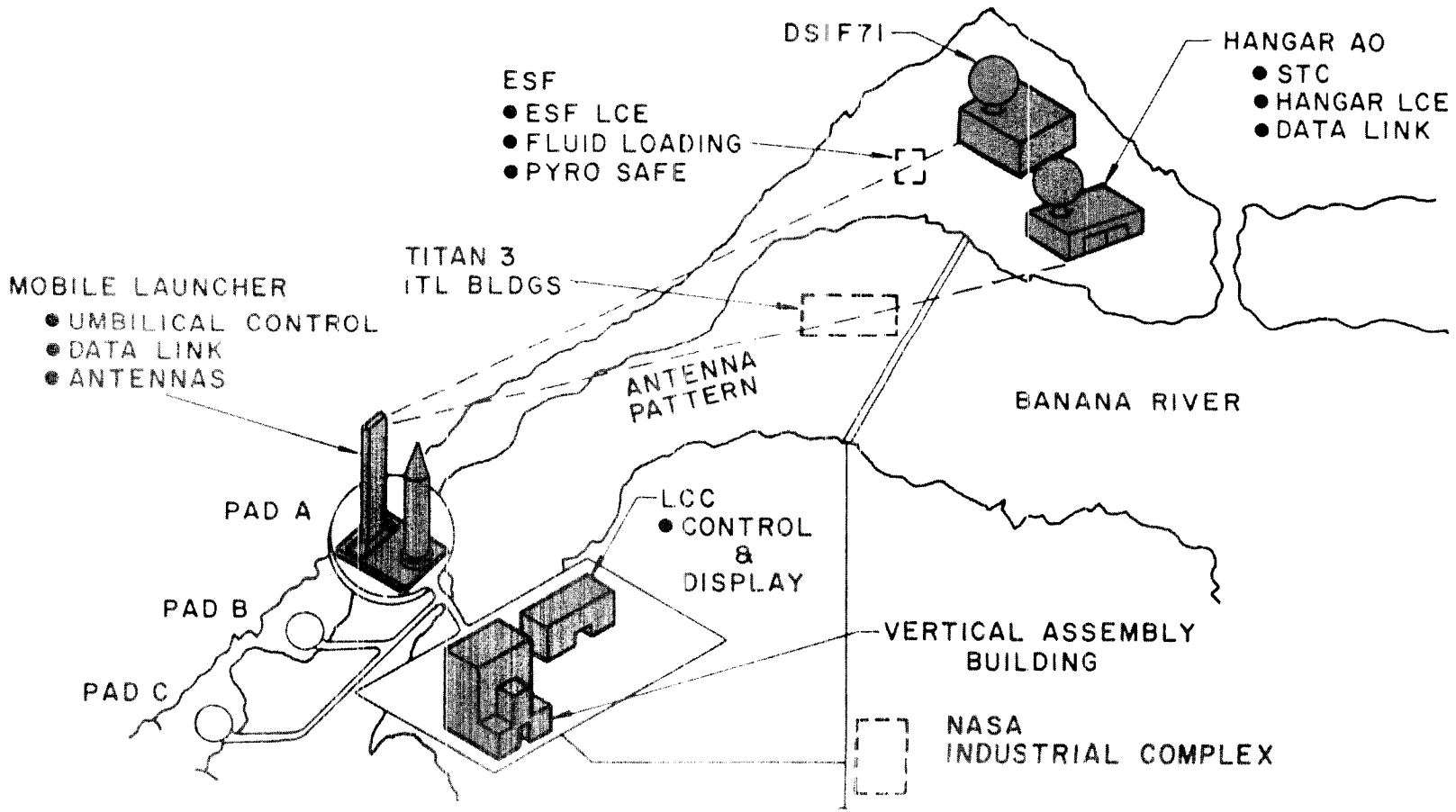
DSIF71
HANGAR AO
● STC
● HANGAR LCE
● DATA LINK
ESF
● ESF LCE
● FLUID LOADING
● PYRO SAFE
TITAN 3
ITL BLDGS
MOBILE LAUNCHER
● UMBILICAL CONTROL
● DATA LINK
● ANTENNAS
ANTENNA PATTERN
BANANA RIVER
PAD A
LCC
● CONTROL & DISPLAY
PAD B
VERTICAL ASSEMBLY BUILDING
PAD C
NASA INDUSTRIAL COMPLEX

UMBILICAL FUNCTIONS

POST-EVACUATION CRITICAL

- GROUND POWER
- PYRO CONTINUITY
- PROPULSION PRESSURES
- BATTERY VOLTAGES
- MAIN BUS
- RF LEADS
- S/C POWER ON-OFF

PRE-EVACUATION USE

- HARDWARE TLM
- HARDWARE COMMAND LOAD
- C&S LOAD
- C&S READ-OUT
- RADIO S/S POWER
- POWER S/S MONITORS
- PYRO ARM-SAFE
- CAPSULE SIGNALS
- G&C MONITORS

LCE FUNCTIONS - BASIC

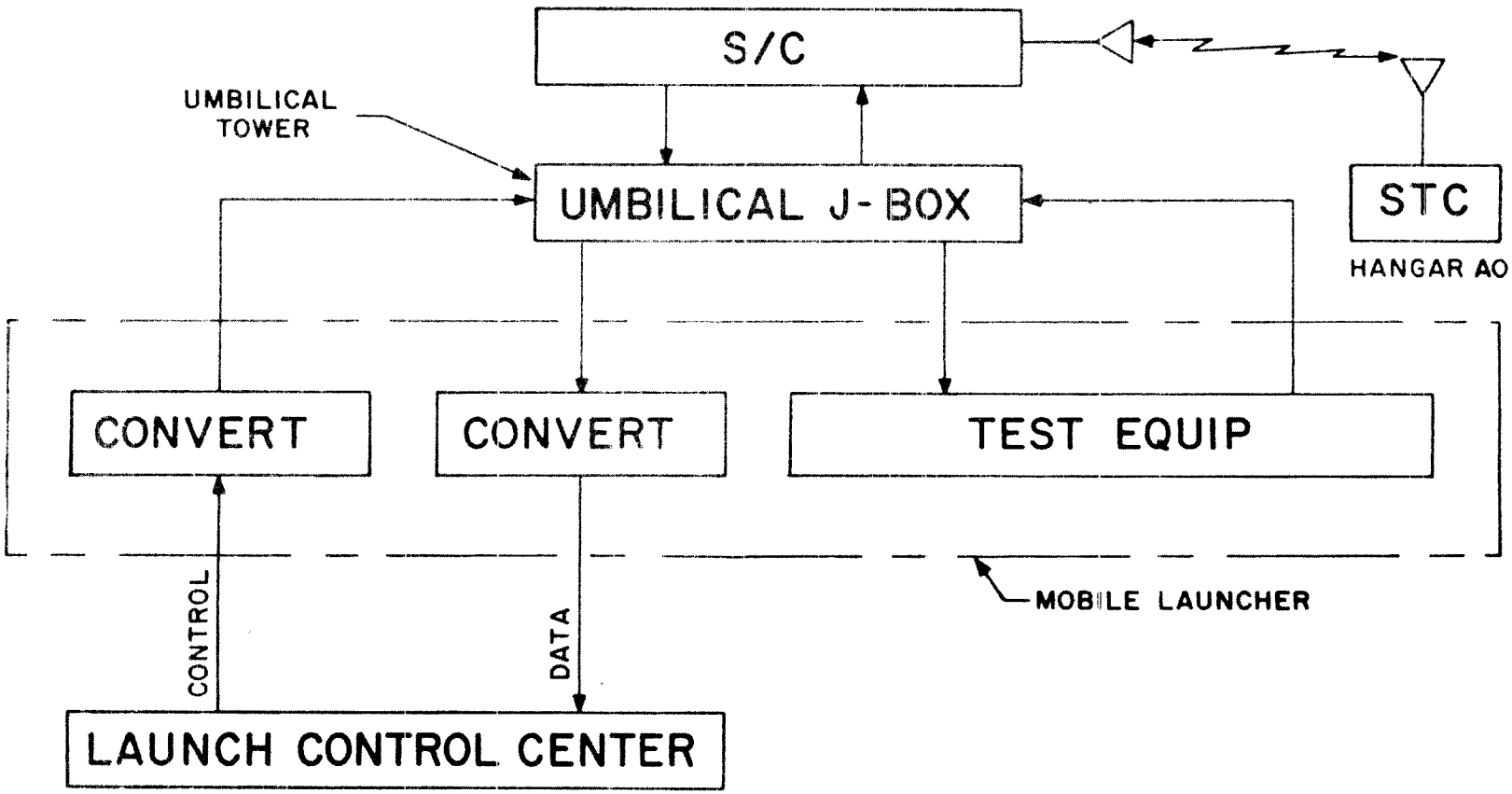

LCE FUNCTIONS-STC/LCC LINK

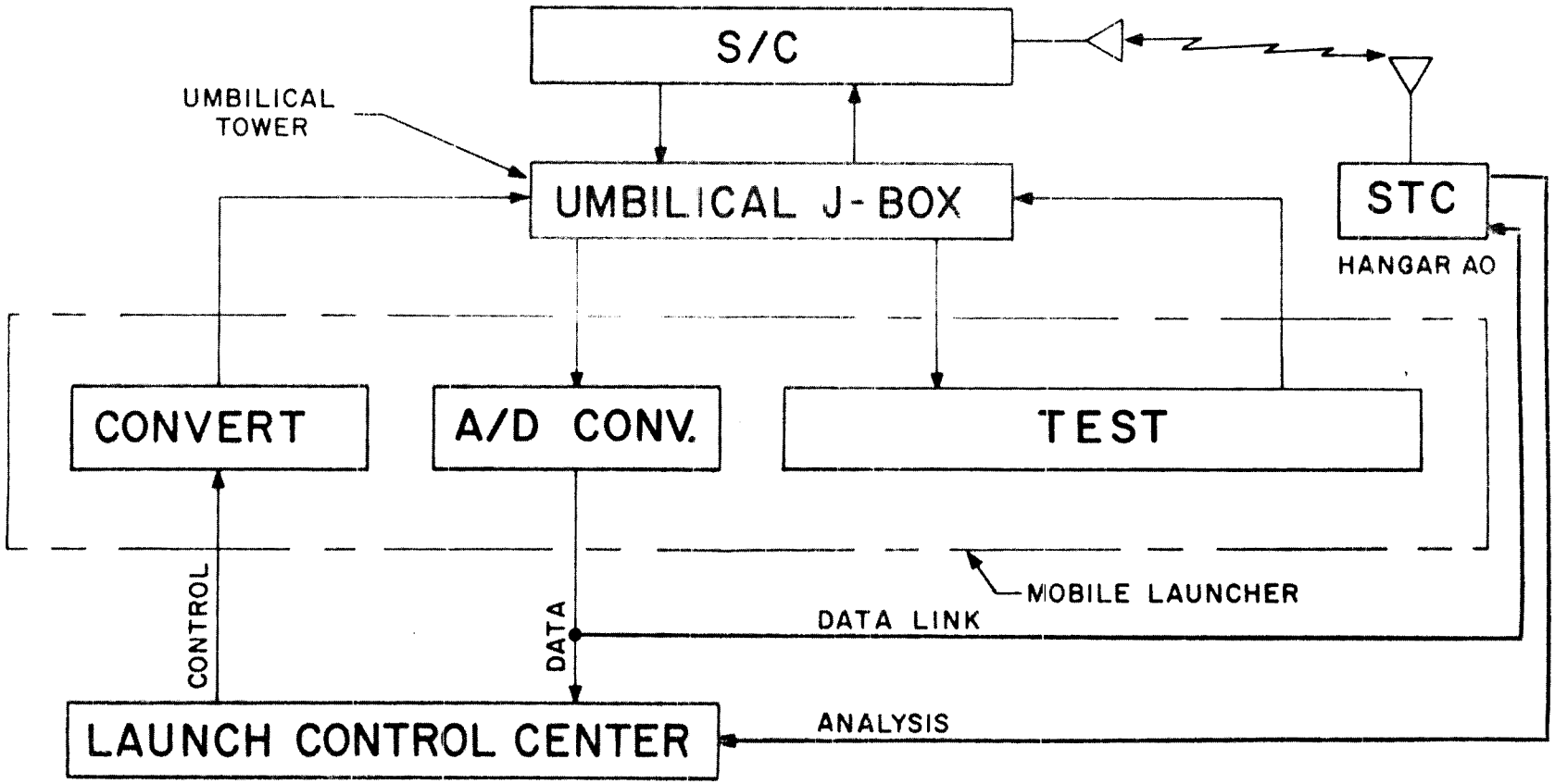

LCE FUNCTIONS-ADDED UMBILICAL DATA

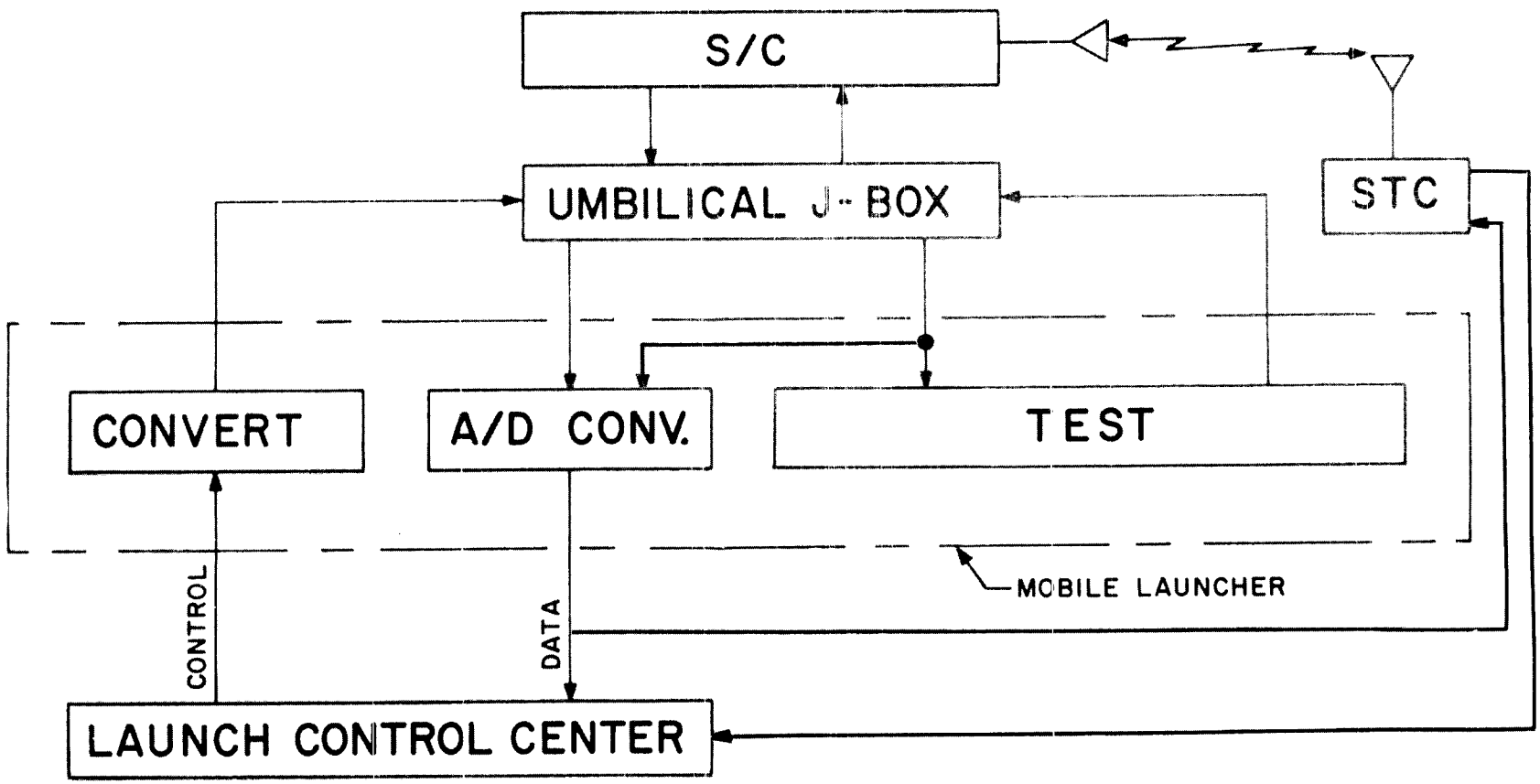

LCE FUNCTIONS-STC CONTROL LINK

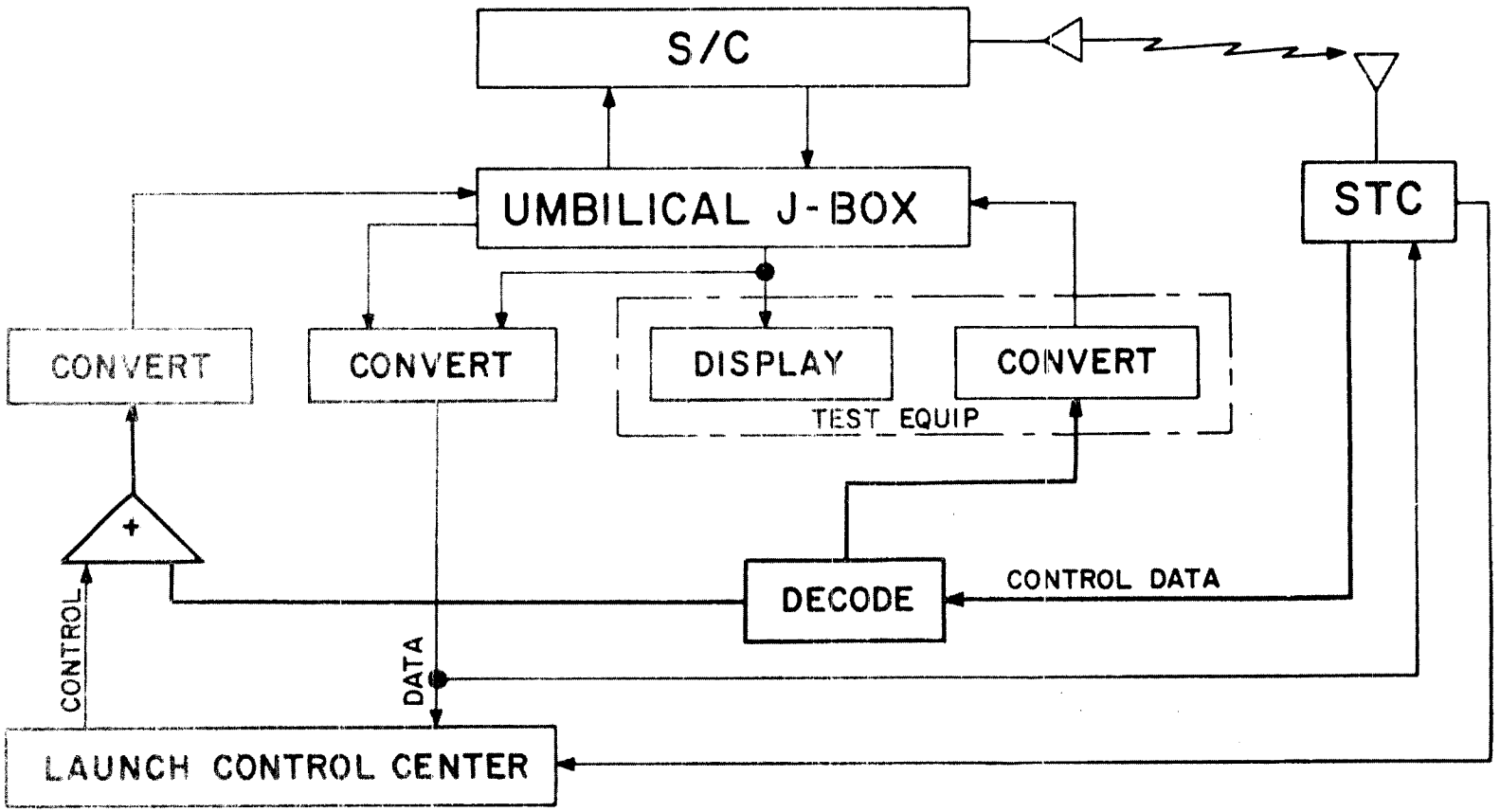

CONTROL LINK DETAILS

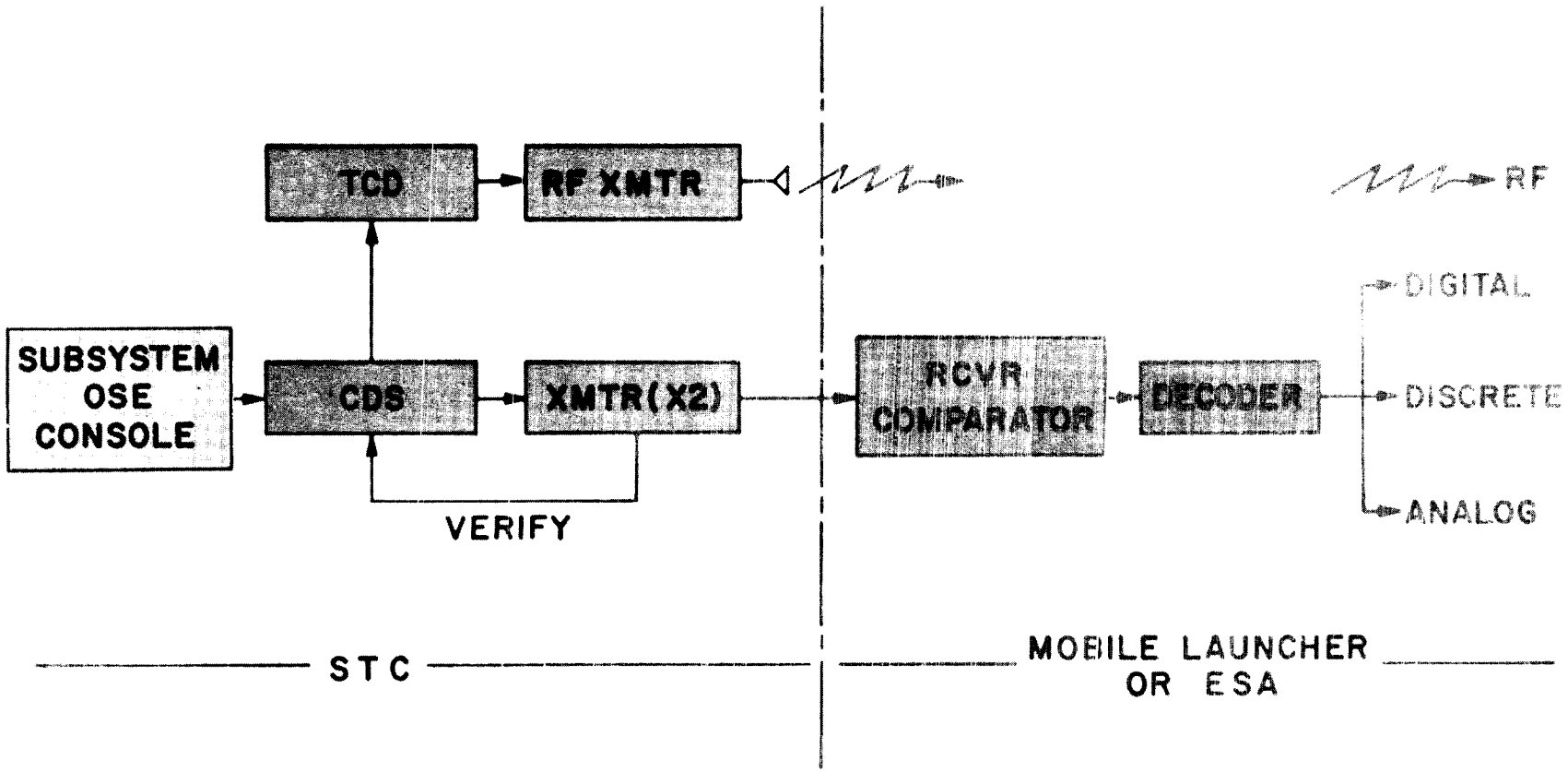

INFORMATION LINK DETAILS

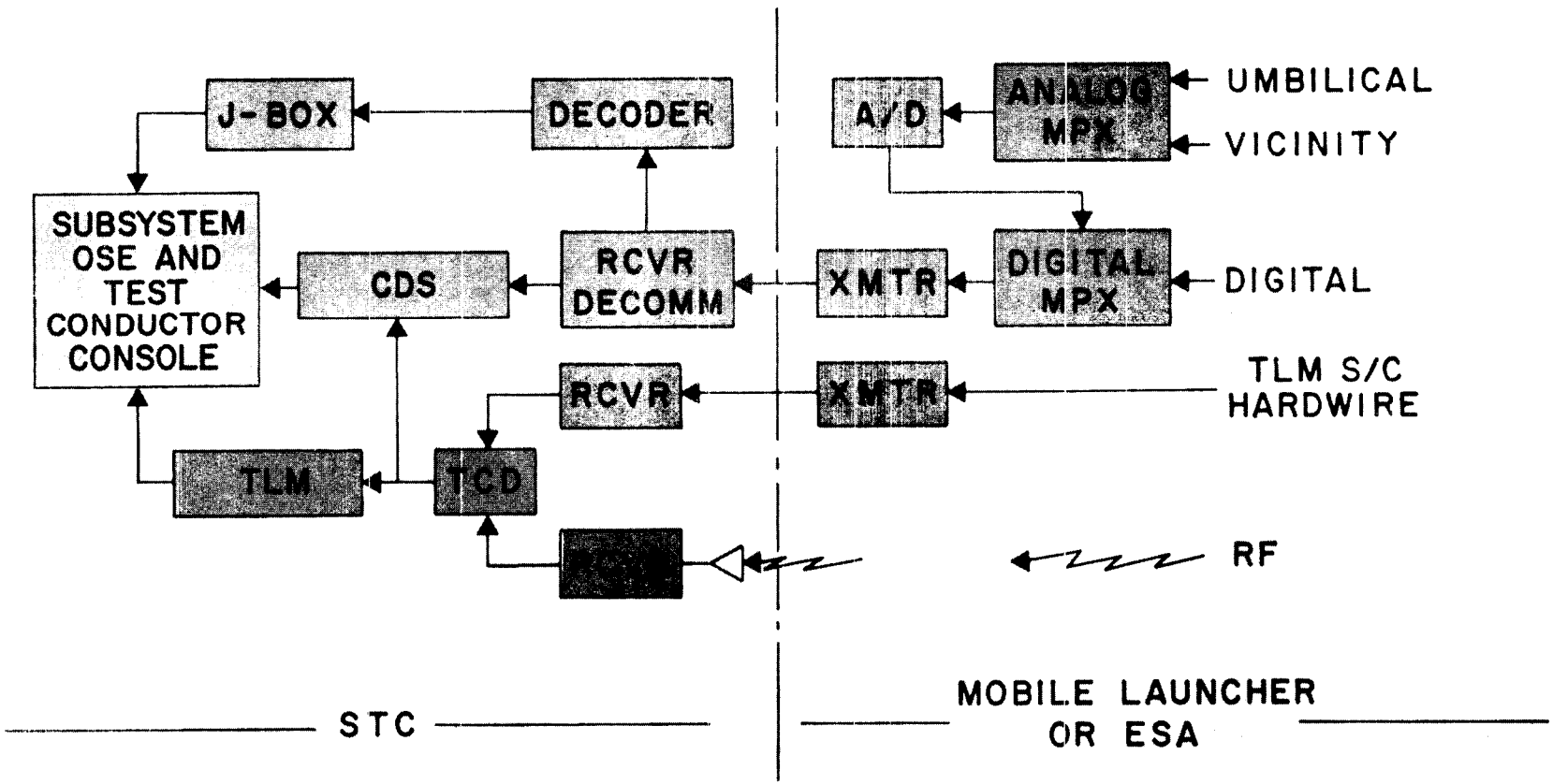

OVERALL LCE

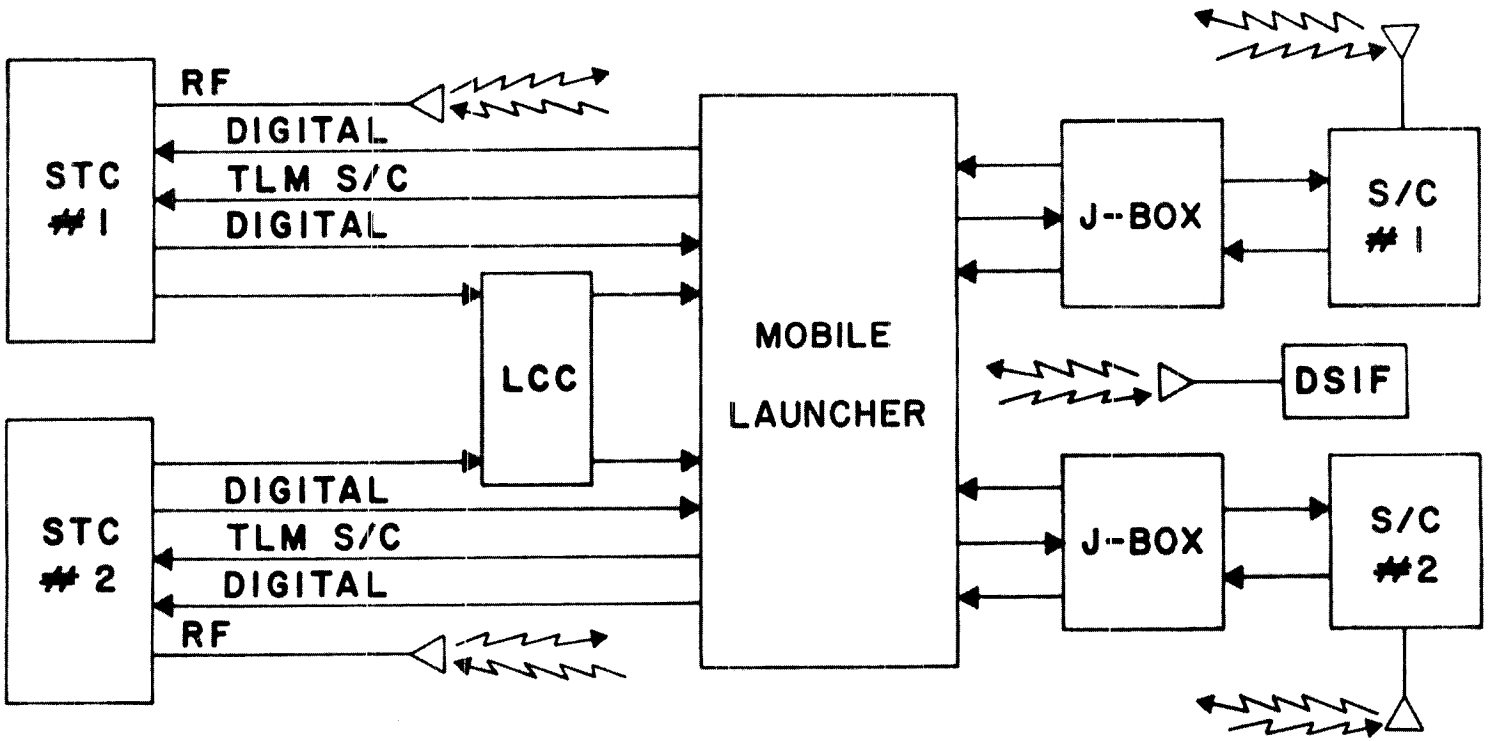
STC #1
RF
DIGITAL
TLM S/C
DIGITAL
LCC
STC #2
DIGITAL
TLM S/C
DIGITAL
RF
MOBILE LAUNCHER
J-BOX
S/C #1
DSIF
J-BOX
S/C #2

LCE PROBLEM AREAS

- VOYAGER VS SATURN FLOW
- PAD A/STC LINE OF SIGHT
- FUEL STERILIZATION
- PAD ABORT

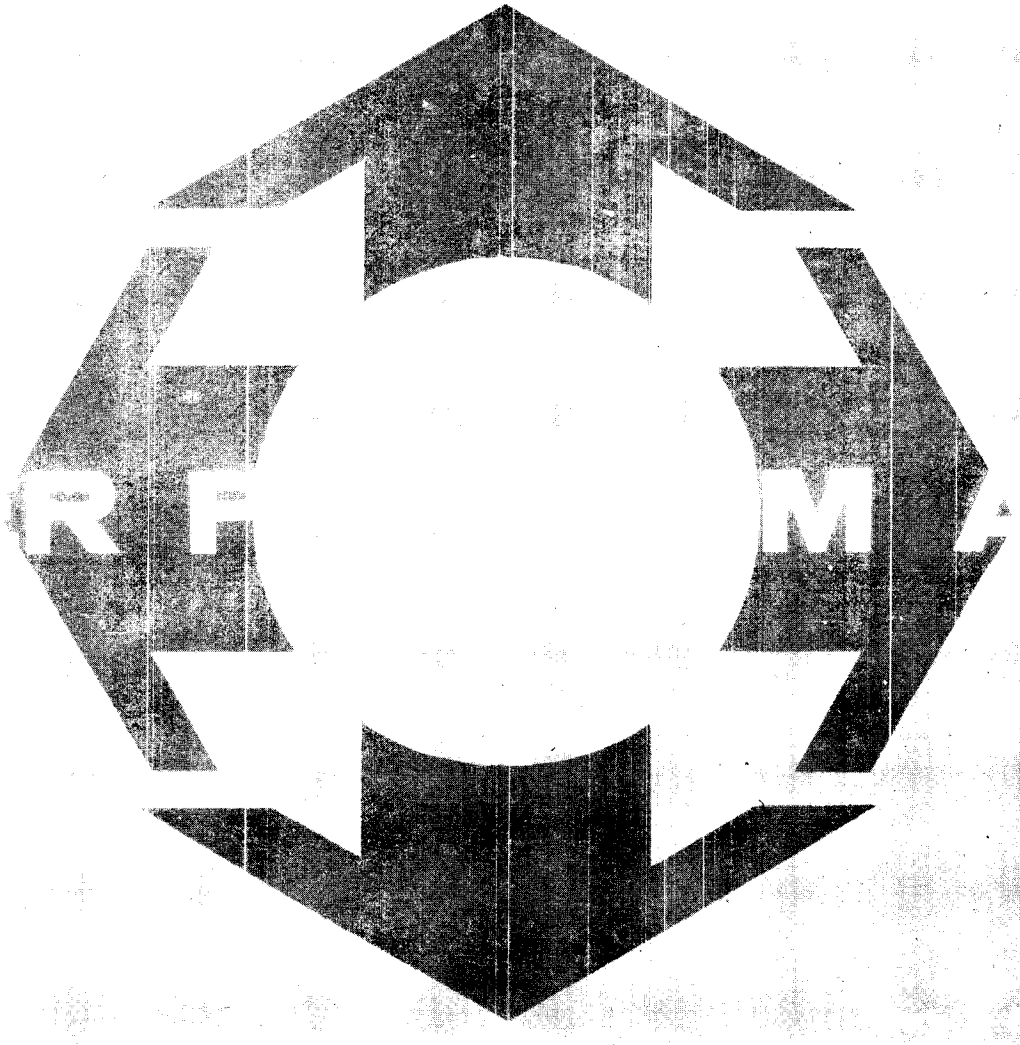
RFM

OTHER PROBLEM AREAS

- PLANETARY VEHICLE SEPARATION
- ARRAY - BATTERY LOAD SHARING
- ANTENNA DEPLOYMENT / ARTICULATION
- ATTITUDE CONTROL JETS
- APPROACH GUIDANCE
- ATTITUDE VERIFICATION

OTHER PROBLEM AREAS

- PLANETARY VEHICLE SEPARATION
- ARRAY - BATTERY LOAD SHARING
- ANTENNA DEPLOYMENT / ARTICULATION
- ATTITUDE CONTROL JETS
- APPROACH GUIDANCE
- ATTITUDE VERIFICATION

PLANETARY VEHICLE SEPARATION

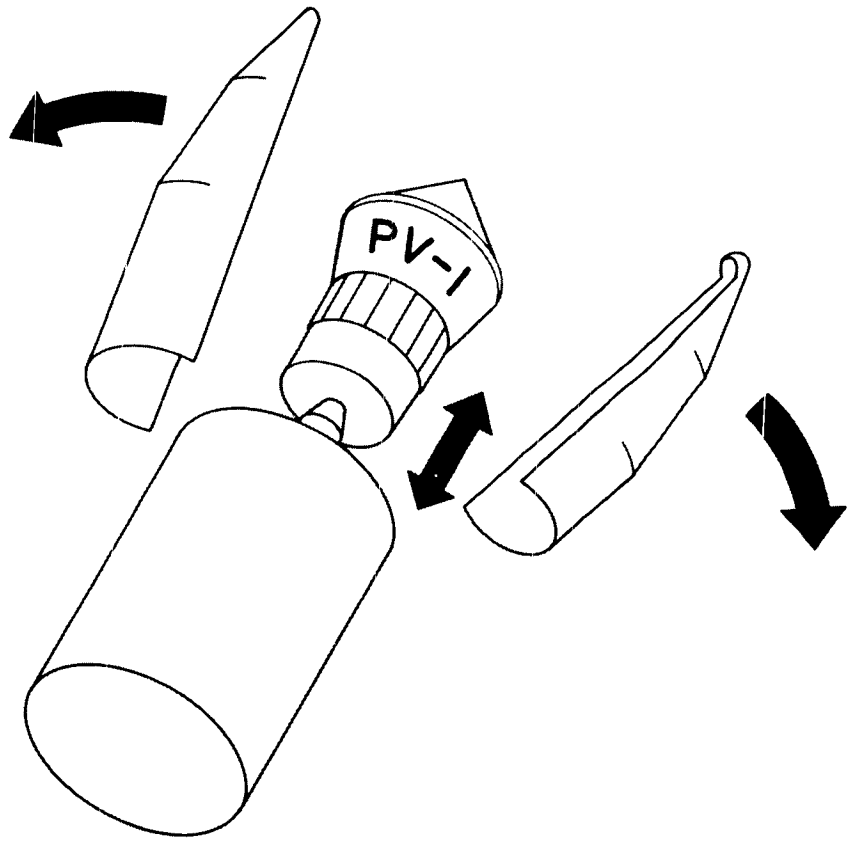

PLANETARY VEHICLE SEPARATION

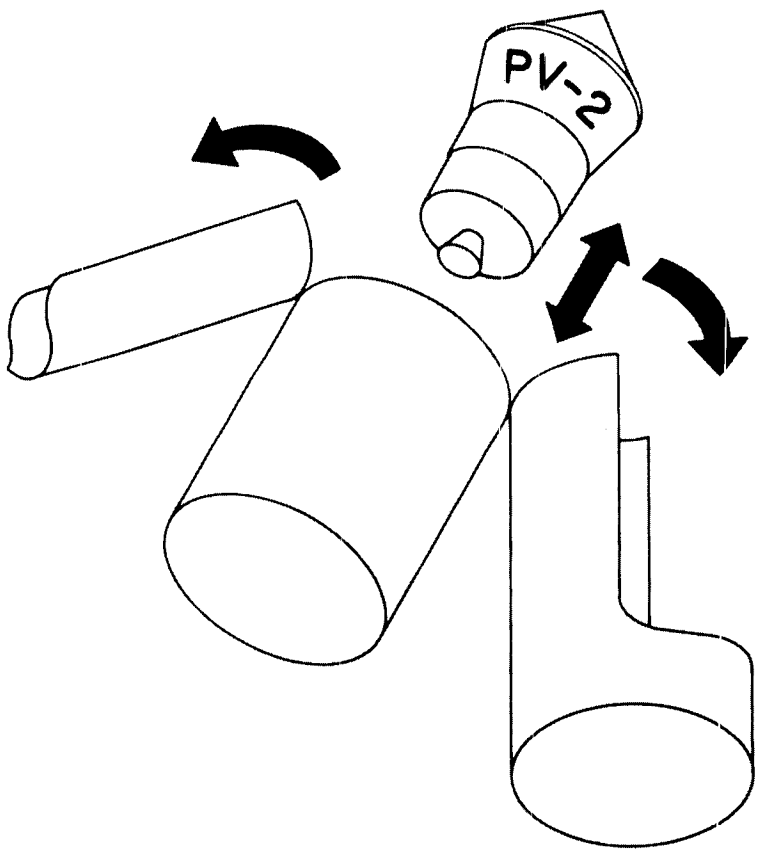

PLANETARY VEHICLE SEPARATION

PHYSICAL SEPARATION

- FRANGIBLE NUTS
- ENCAPSULATED FUSE
- V-CLAMP
- GAS PISTON

VELOCITY INCREMENT

- PRELOADED SPRINGS
- COLD-GAS JETS
- SOLID ROCKETS
- GAS PISTON

OTHER PROBLEM AREAS

- PLANETARY VEHICLE SEPARATION
- ARRAY - BATTERY LOAD SHARING
- ANTENNA DEPLOYMENT / ARTICULATION
- ATTITUDE CONTROL JETS
- APPROACH GUIDANCE
- ATTITUDE VERIFICATION

ARRAY-BATTERY LOAD SHARING

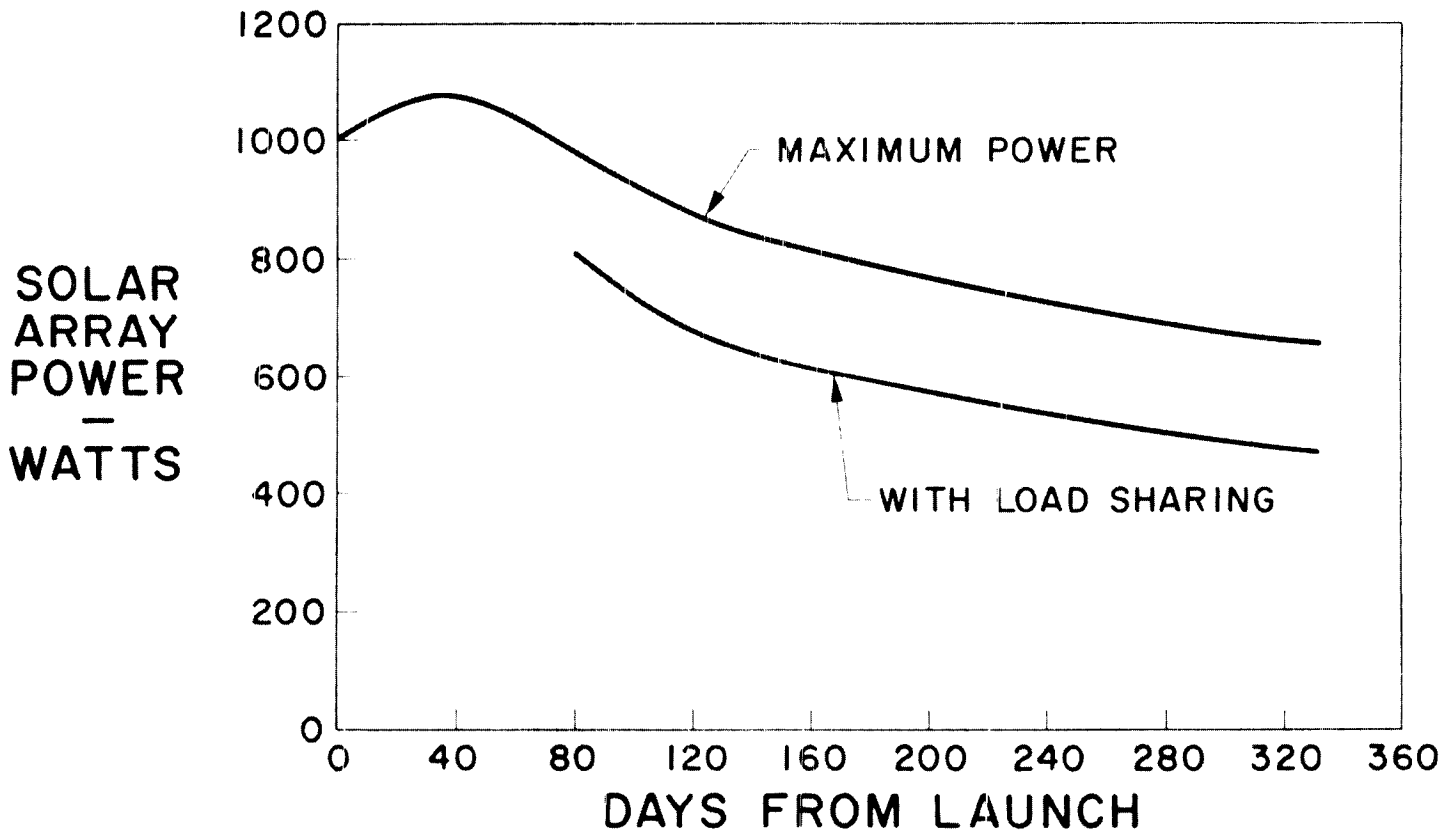

ARRAY-BATTERY LOAD SHARING

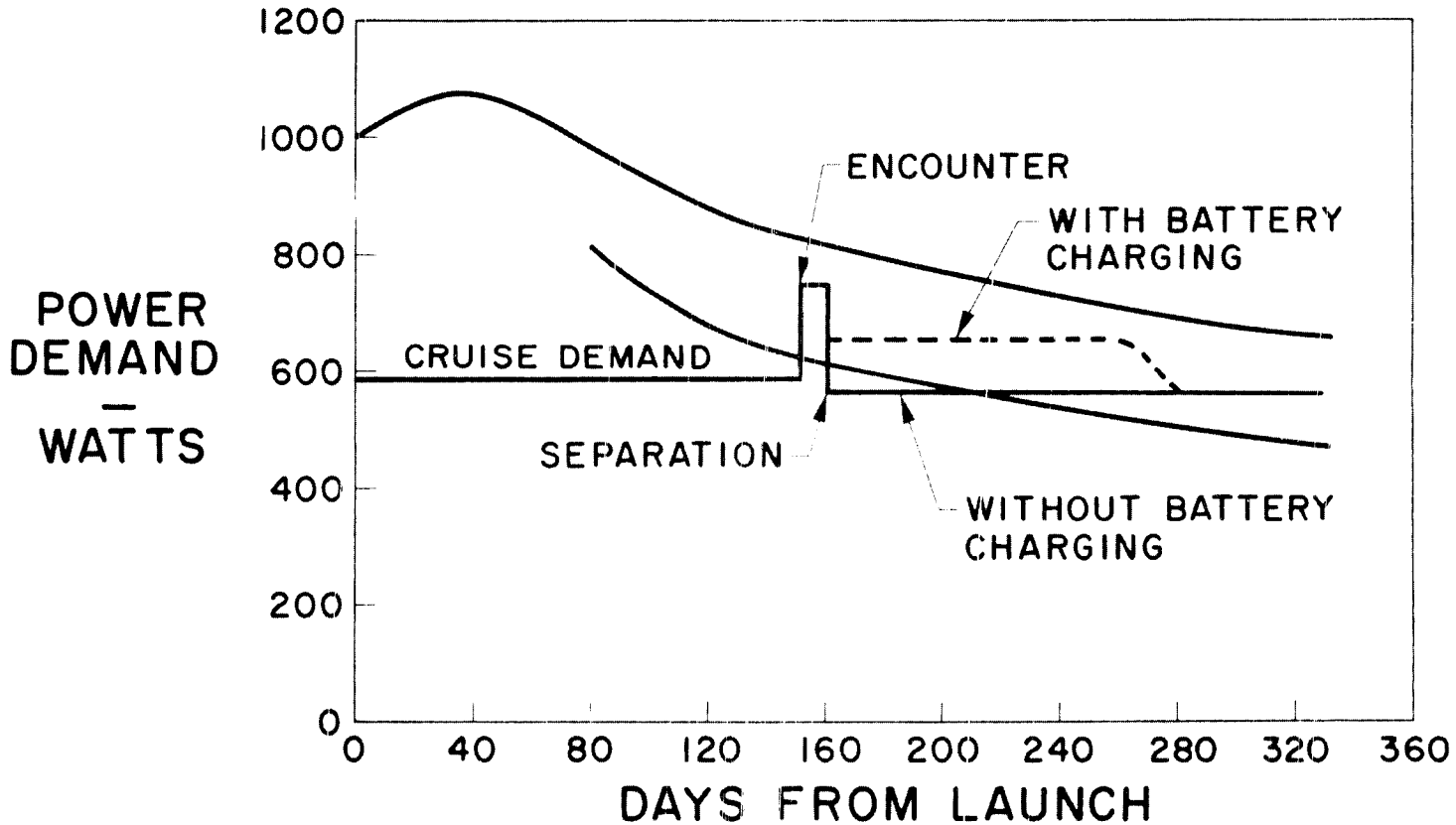

LOAD SHARING PREVENTION

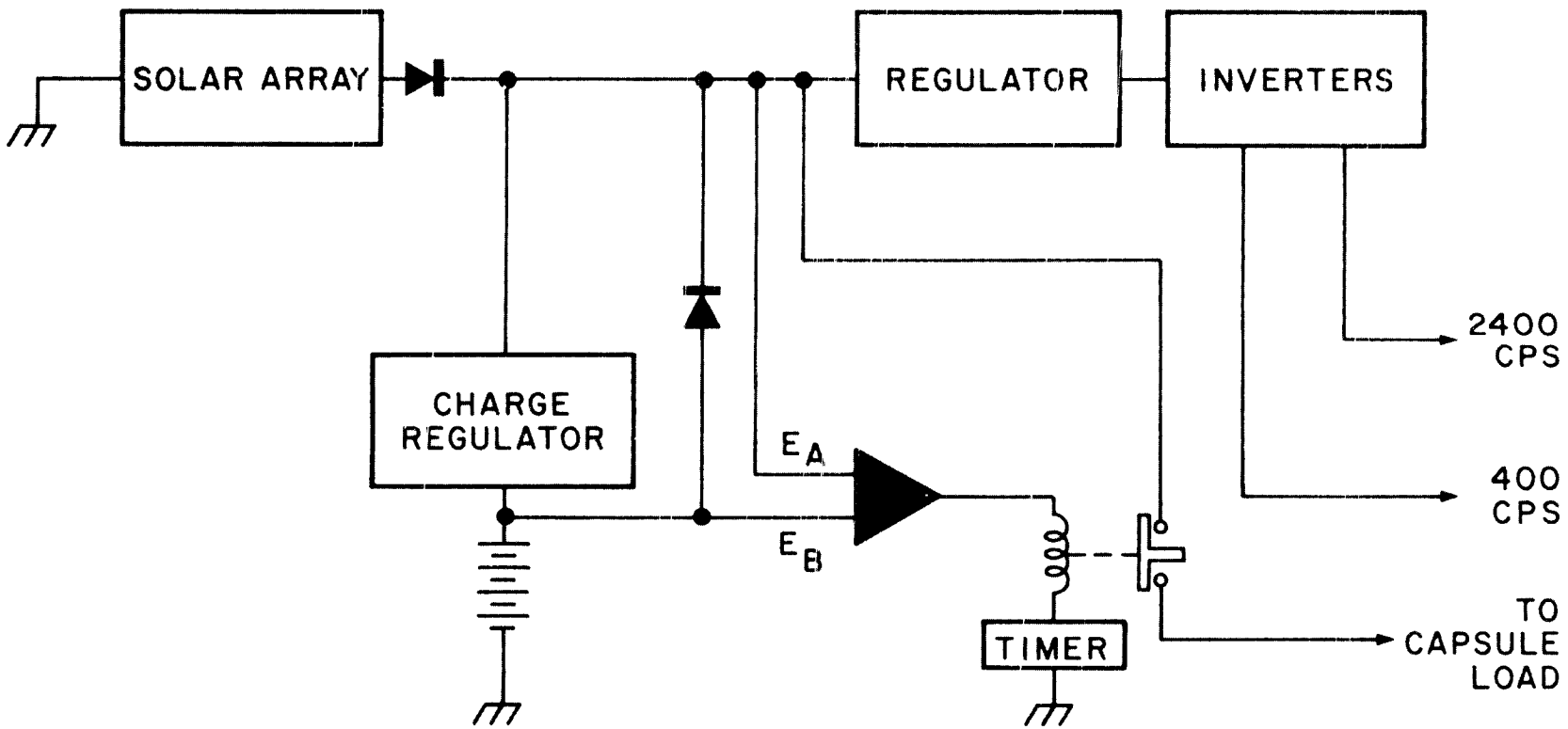

OTHER PROBLEM AREAS

- PLANETARY VEHICLE SEPARATION
- ARRAY - BATTERY LOAD SHARING
- ANTENNA DEPLOYMENT / ARTICULATION
- ATTITUDE CONTROL JETS
- APPROACH GUIDANCE
- ATTITUDE VERIFICATION

ANTENNA DEPLOYMENT/ARTICULATION

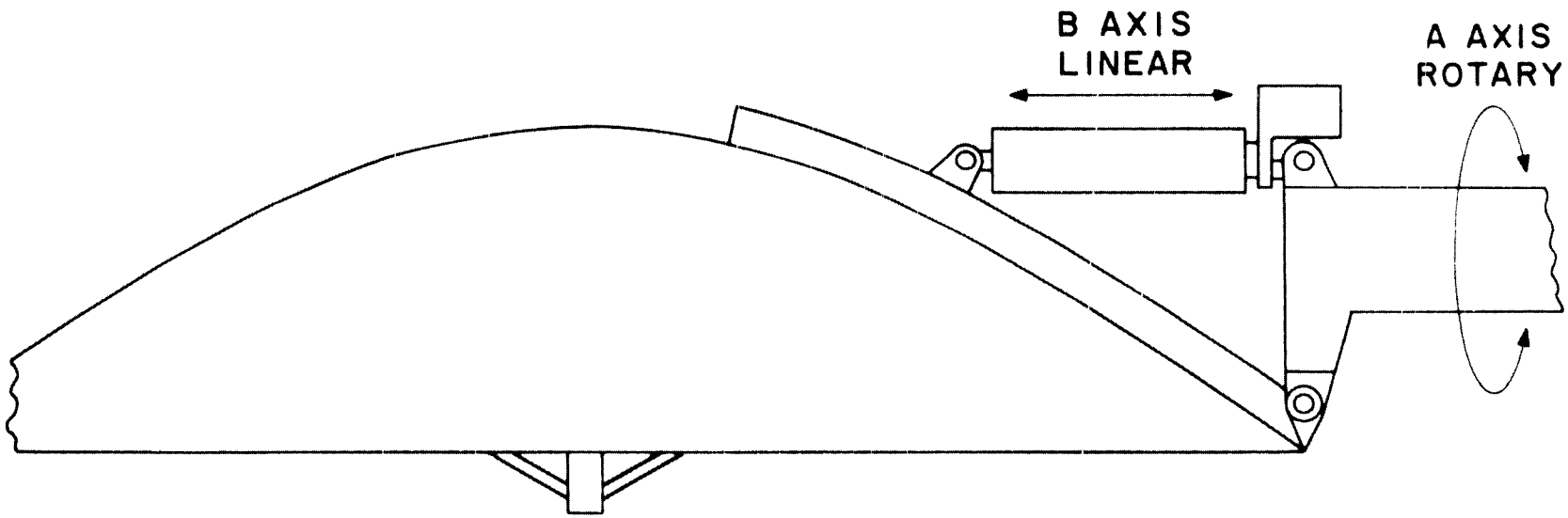

ANTENNA DEPLOYMENT/ARTICULATION

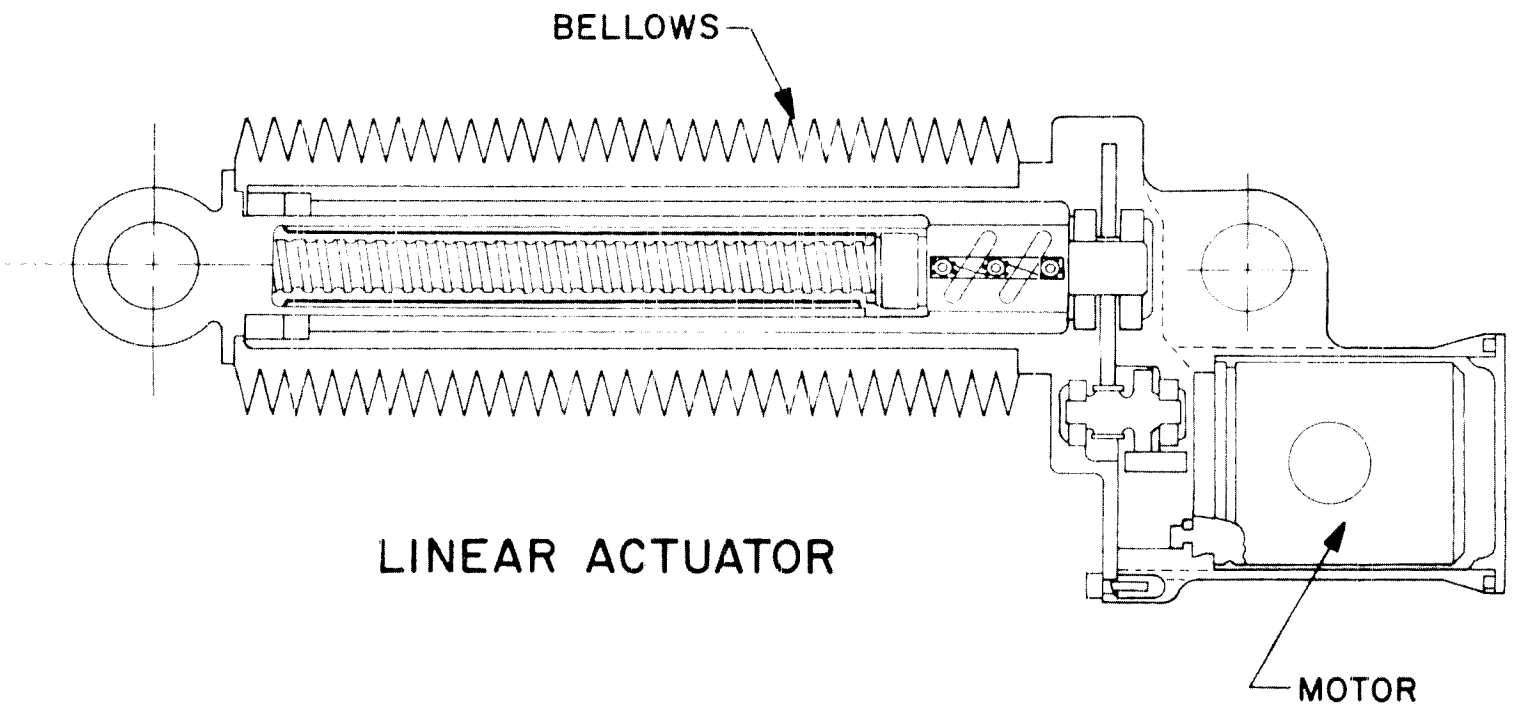

LINEAR ACTUATOR

ANTENNA DEPLOYMENT/ARTICULATION

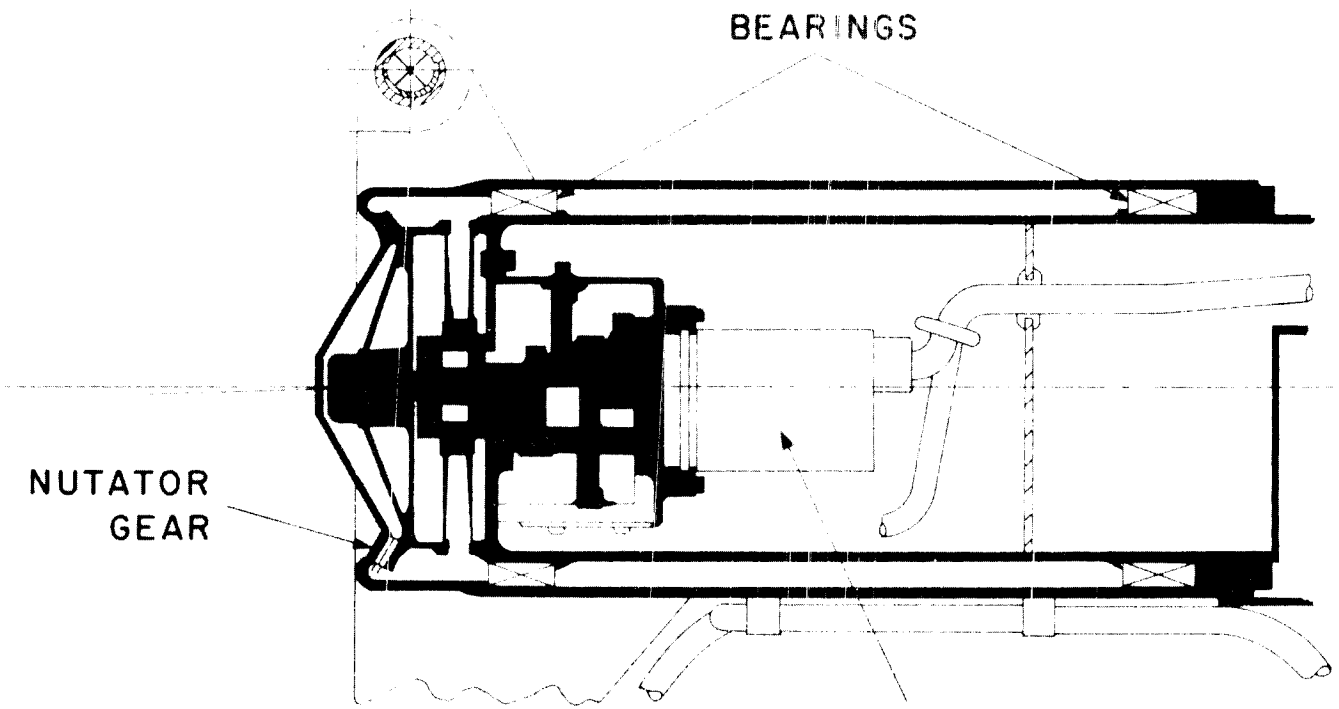

ROTARY ACTUATOR

OTHER PROBLEM AREAS

- PLANETARY VEHICLE SEPARATION
- ARRAY - BATTERY LOAD SHARING
- ANTENNA DEPLOYMENT / ARTICULATION
- ATTITUDE CONTROL JETS
- APPROACH GUIDANCE
- ATTITUDE VERIFICATION

ATTITUDE CONTROL JETS

SINGLE THRUST LEVEL

MAX LIMIT CYCLE RATE 0.5×10^{-4} RAD/SEC

LIMIT CYCLE IMPULSE 631 LB-SEC

VALVE OPERATIONS (ALL) 56,000

DUAL THRUST LEVEL

MAX LIMIT CYCLE RATE 0.07×10^{-4} RAD/SEC

LIMIT CYCLE IMPULSE 197 LB-SEC

VALVE OPERATIONS (ALL) 19,200

ATTITUDE CONTROL PROPELLANTS

	TANKAGE & FLUID WEIGHT	TANKAGE VOLUME	HEATER	FLIGHT EXPERIENCE
FREON	160.7 LB.	2.7 CU. FT.	YES	NIMBUS
NITROGEN	185.7 LB.	5.1 CU. FT.	NO	MARINER
HYDRAZINE	NO FLIGHT EXPERIENCE AT LOW THRUST			

ATTITUDE CONTROL JET MODULES

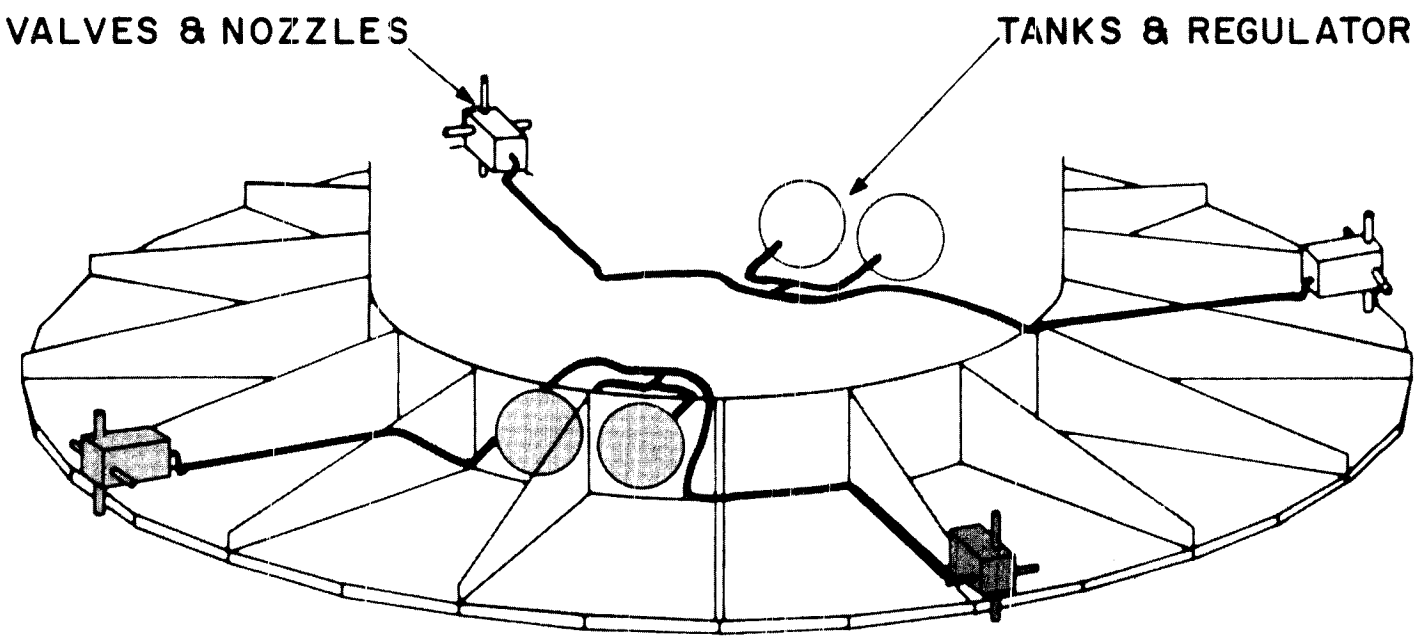

OTHER PROBLEM AREAS

- PLANETARY VEHICLE SEPARATION
- ARRAY - BATTERY LOAD SHARING
- ANTENNA DEPLOYMENT / ARTICULATION
- ATTITUDE CONTROL JETS
- APPROACH GUIDANCE
- ATTITUDE VERIFICATION

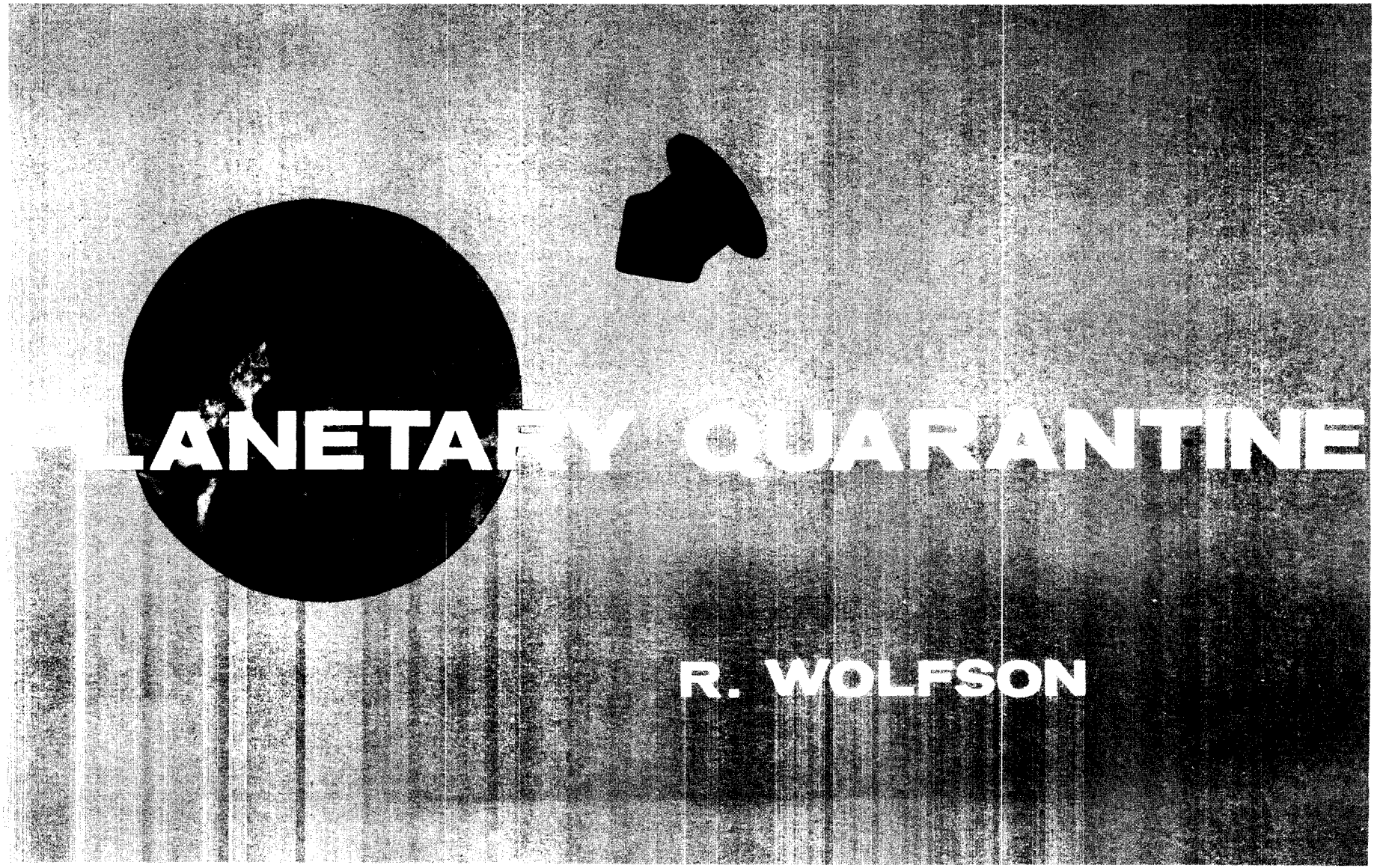
PLANETARY QUARANTINE
R. WOLFSON

OTHER PROBLEM AREAS

- PLANETARY VEHICLE SEPARATION
- ARRAY - BATTERY LOAD SHARING
- ANTENNA DEPLOYMENT / ARTICULATION
- ATTITUDE CONTROL JETS
- APPROACH GUIDANCE
- ATTITUDE VERIFICATION

METHODS OF ATTITUDE VERIFICATION

- HIGH GAIN ANTENNA
- GYROS
- SYSTEMS CHECK
- GIMBALLED SENSORS
- SOLAR ASPECT SENSOR

METHODS OF ATTITUDE VERIFICATION

- HIGH GAIN ANTENNA
- GYROS
- SYSTEMS CHECK
- GIMBALLED SENSORS
- SOLAR ASPECT SENSOR

HIGH GAIN ANTENNA

- COARSE VERIFICATION ONLY
- ADDED COMMAND DATA
- COMPLEX MANEUVER SEQUENCE
- ANTENNA RELIABILITY LOSS

METHODS OF ATTITUDE VERIFICATION

- HIGH GAIN ANTENNA
- GYROS
- SYSTEMS CHECK
- GIMBALLED SENSORS
- SOLAR ASPECT SENSOR

METHODS OF ATTITUDE VERIFICATION

- HIGH GAIN ANTENNA
- GYROS
- SYSTEMS CHECK
- GIMBALLED SENSORS
- SOLAR ASPECT SENSOR

METHODS OF ATTITUDE VERIFICATION

- HIGH GAIN ANTENNA
- GYROS
- SYSTEMS CHECK
- GIMBALLED SENSORS
- SOLAR ASPECT SENSOR

METHODS OF ATTITUDE VERIFICATION

- HIGH GAIN ANTENNA
- GYROS
- SYSTEMS CHECK
- GIMBALLED SENSORS
- SOLAR ASPECT SENSOR

SOLAR ASPECT SENSOR

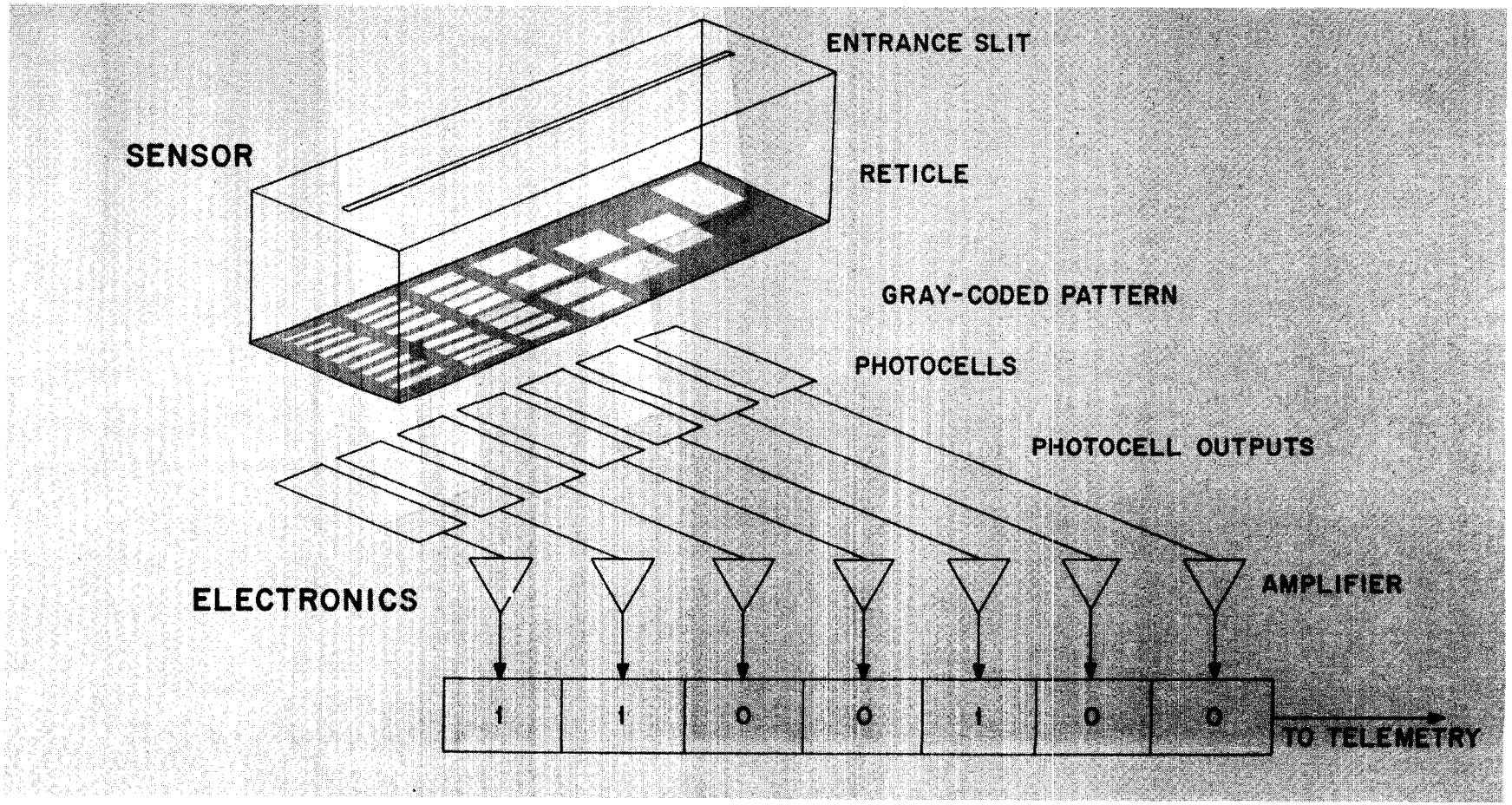

APPROACH GUIDANCE

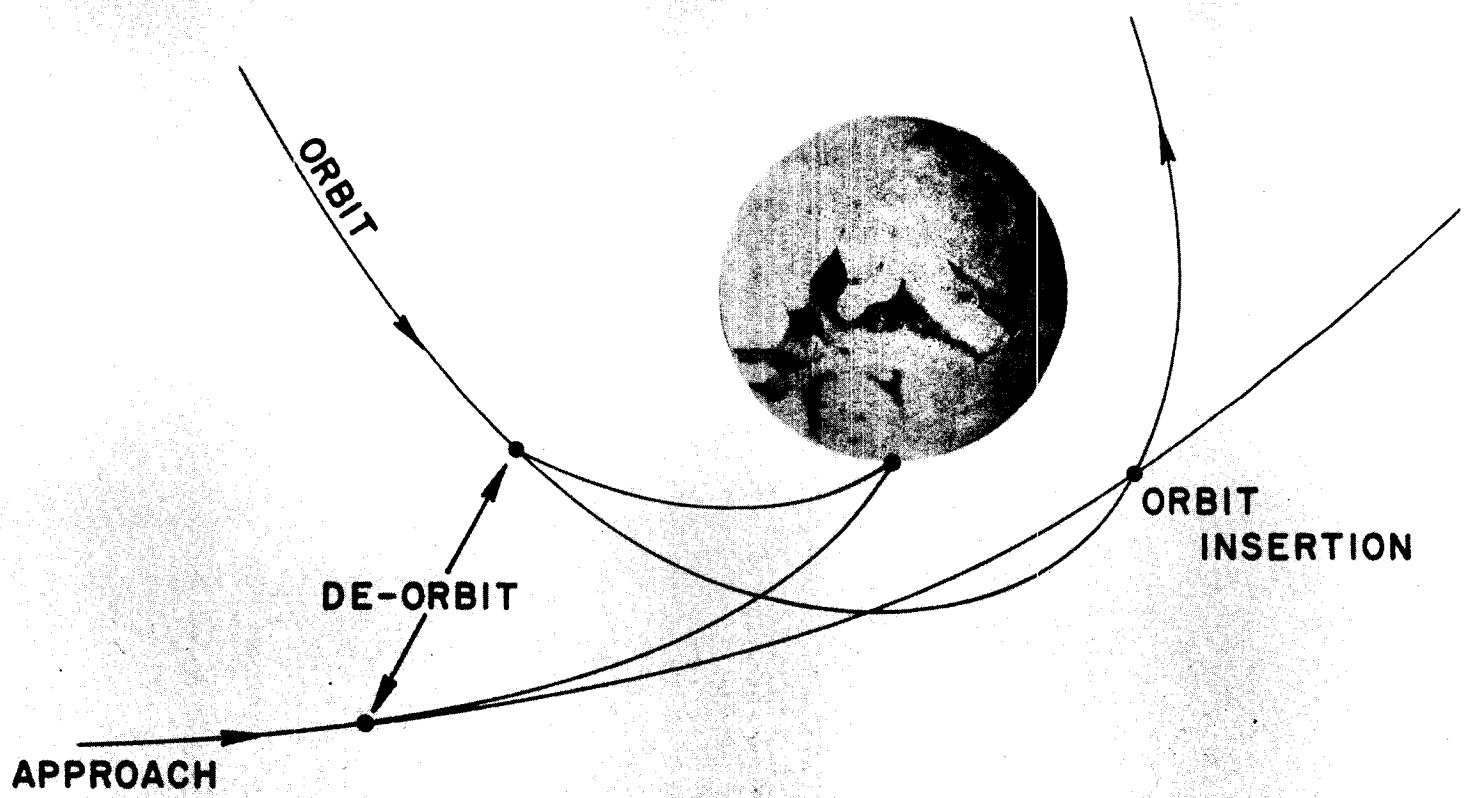

APPROACH

- IDENTIFY ALL SOURCES
- ASSESS PROBABILITY OF EACH
  - MISSION ALTERNATIVES
  - HARDWARE APPROACHES

TODAY'S STATUS

- OPEN BIO-BARRIER LATE
- CONSTRAIN LOOSE EJECTA
- DECONTAMINATE / STERILIZE:
  - A/C GAS - PROBABLY YES
  - MC/OT SYSTEM - POSSIBLY NO
  - OI SYSTEM - PROBABLY NO

PROBABILITY ANALYSIS

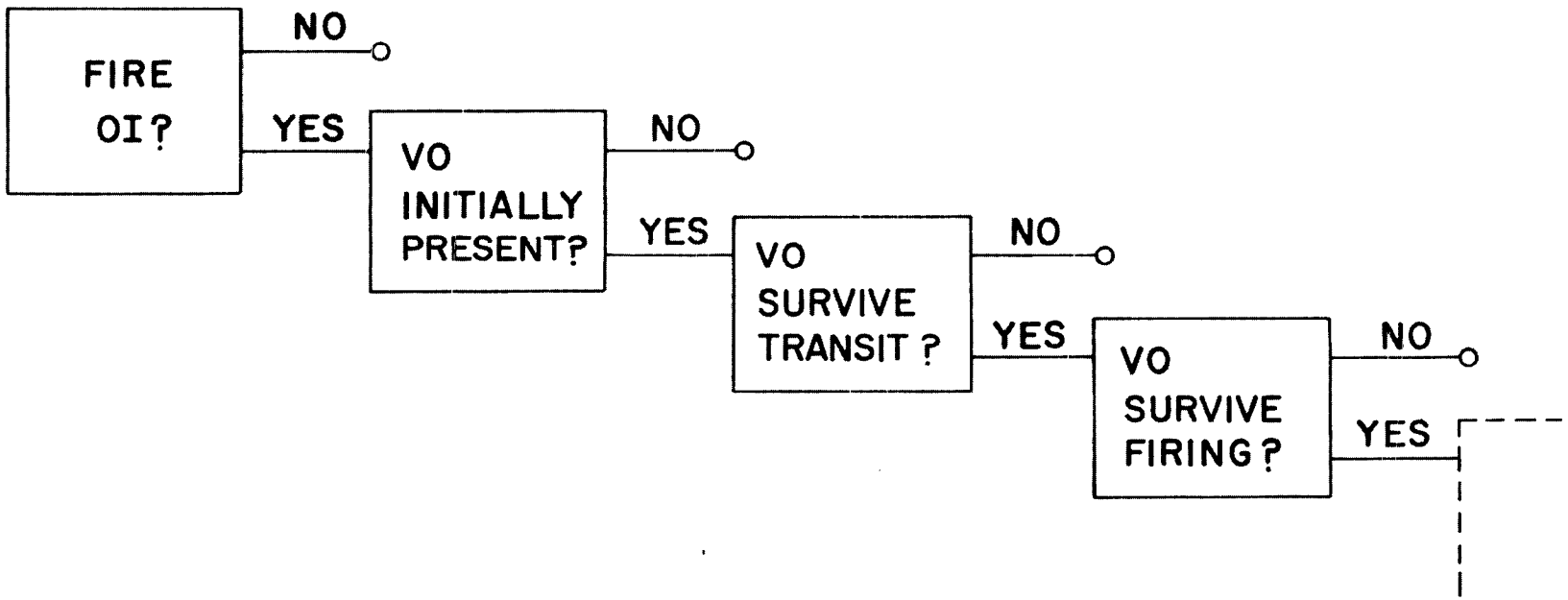

DRY HEAT TREATMENT

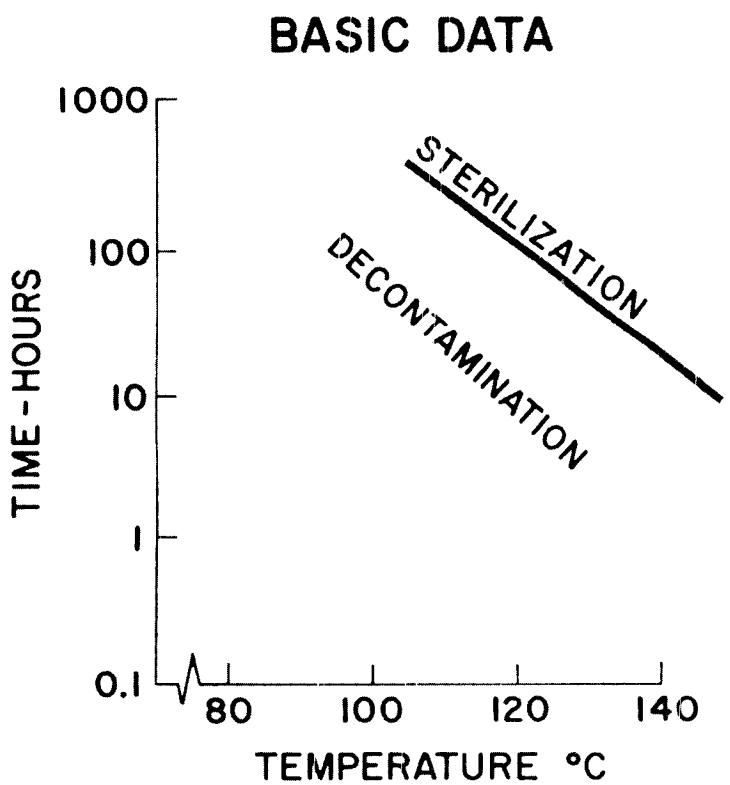

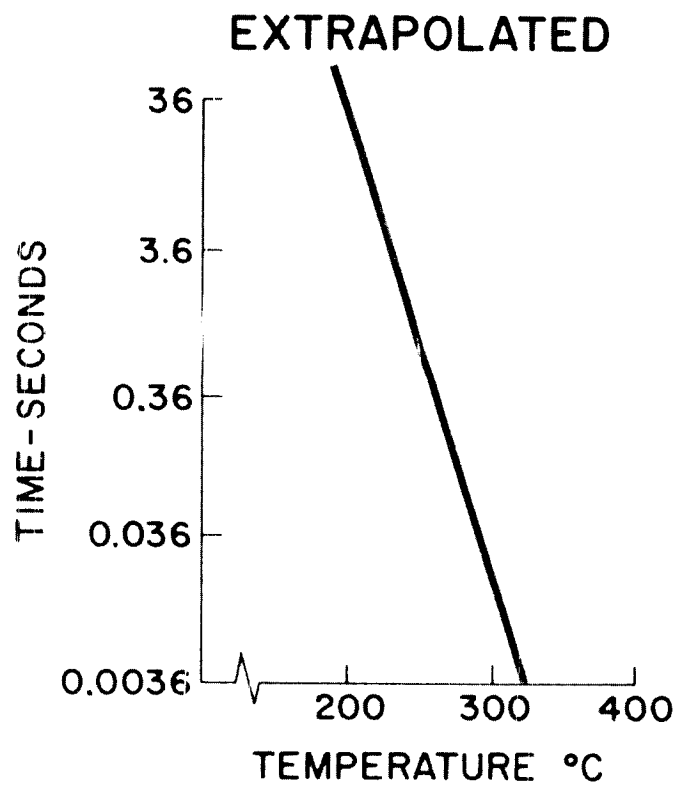

PROBABILITY ANALYSIS

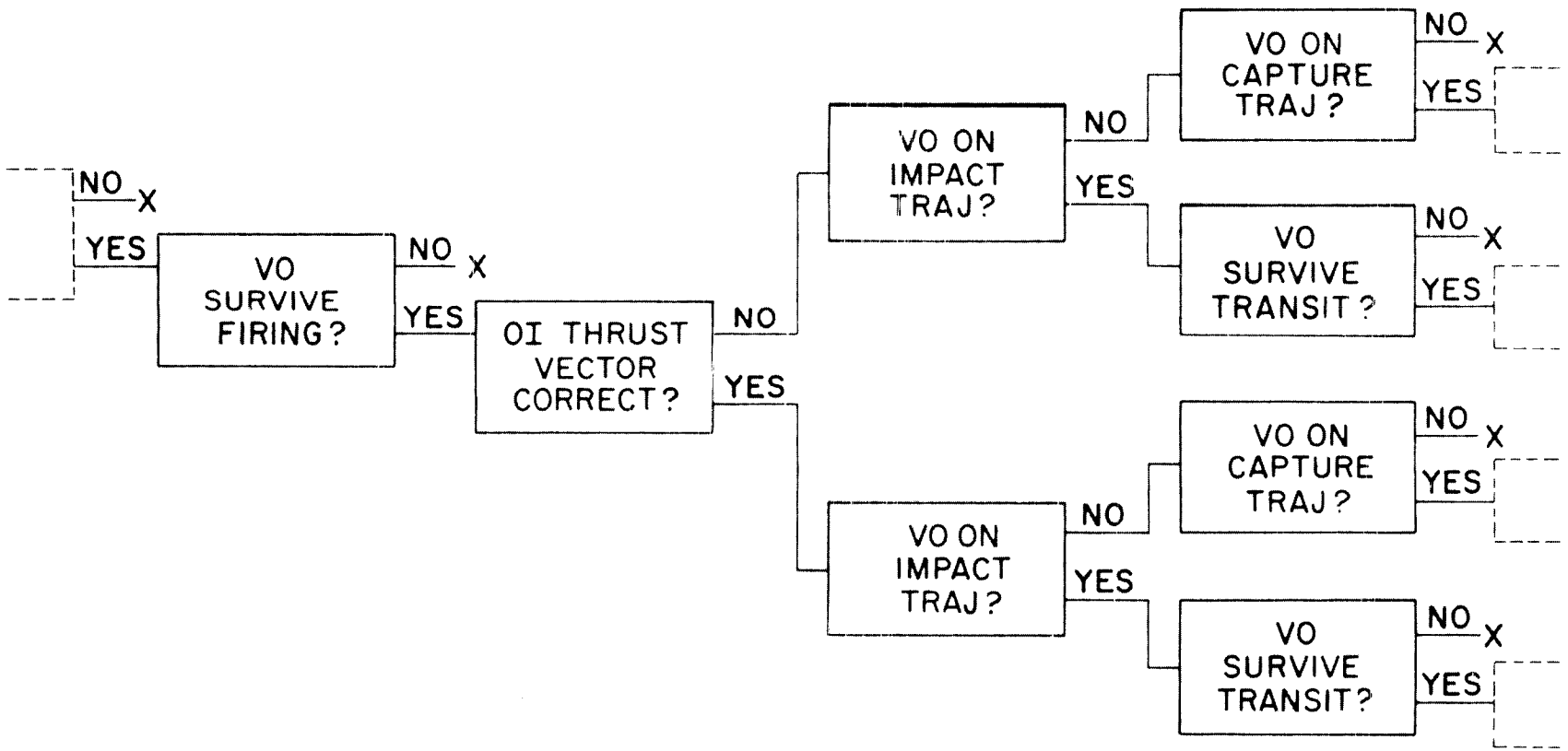

ORBIT INSERTION OPTIONS

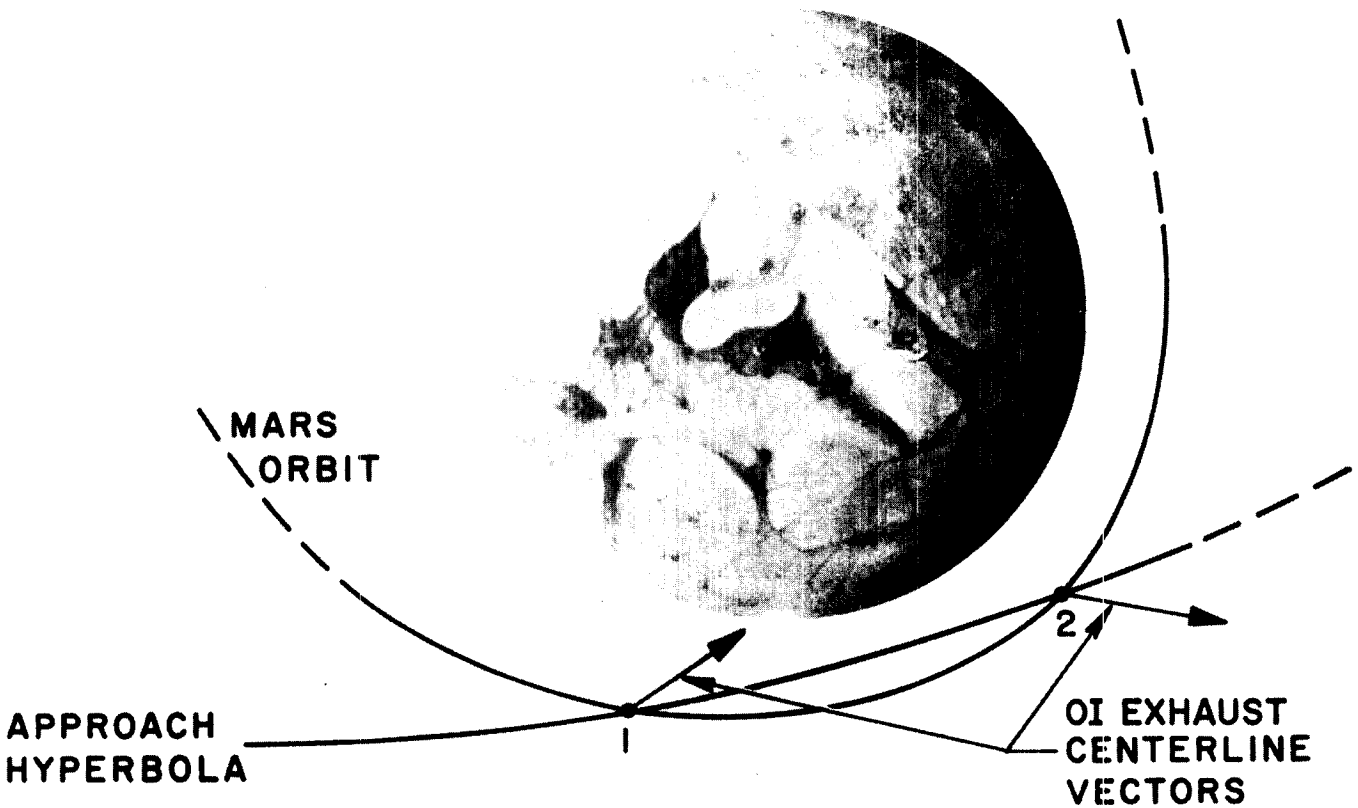

PROBABILITY ANALYSIS

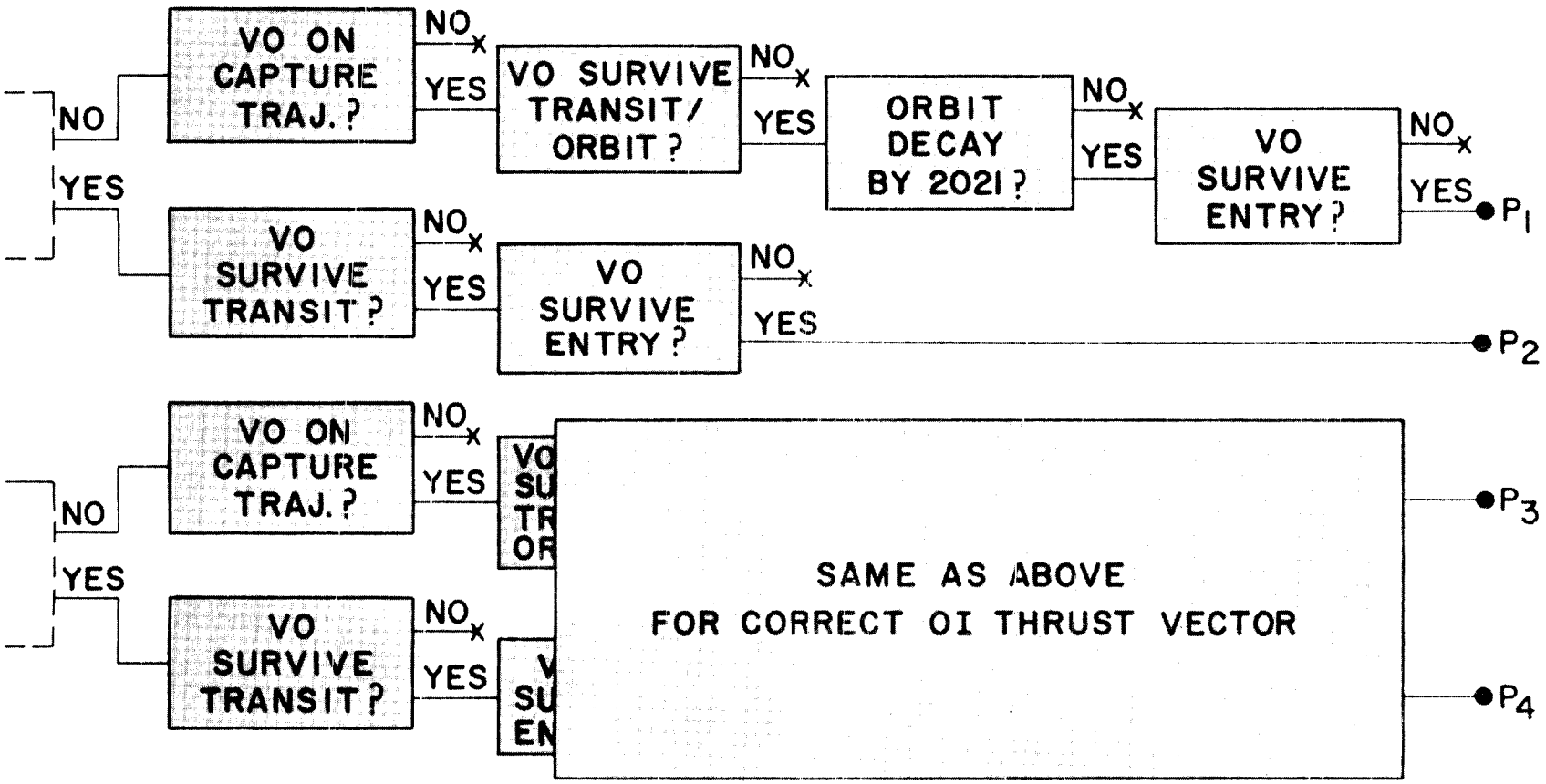

FUTURE TASKS

- MATH MODEL DEVELOPMENT
- MORE SOPHISTICATED ANALYSIS
- MISSION TRADEOFFS – JPL PARTICIPATION

FUTURE TASKS

- MATH MODEL DEVELOPMENT
- MORE SOPHISTICATED ANALYSIS
- MISSION TRADEOFFS – JPL PARTICIPATION

CONTAMINATION TREE

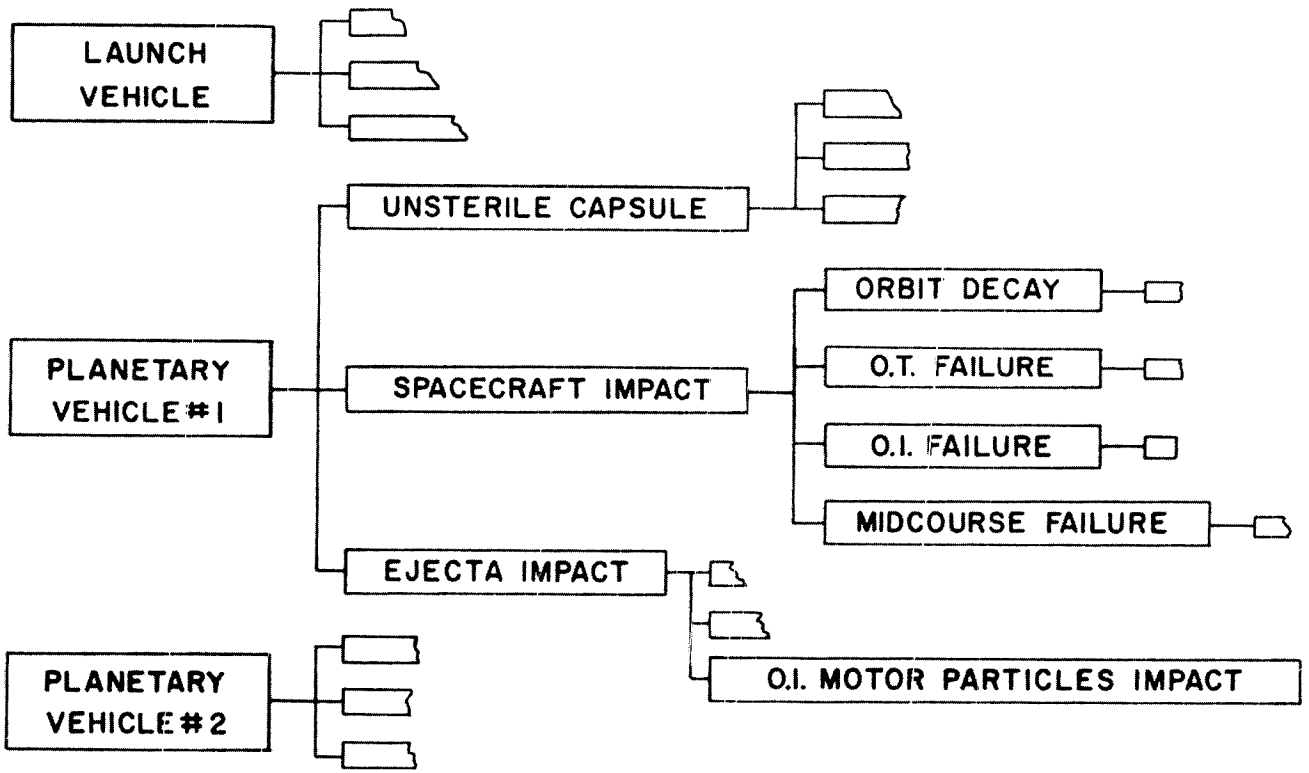

FUTURE TASKS

- MATH MODEL DEVELOPMENT
- MORE SOPHISTICATED ANALYSIS
- MISSION TRADEOFFS – JPL PARTICIPATION

FUTURE TASKS

- MATH MODEL DEVELOPMENT
- MORE SOPHISTICATED ANALYSIS
- MISSION TRADEOFFS—JPL PARTICIPATION

TRADEOFF / OPTIMIZATION EXAMPLE

NOMINAL ORBIT 1,000 X 10,000 KM

CANDIDATE ORBIT 2,000 X 10,000 KM

- ADDITIONAL OI $\Delta V \sim 140$ m/sec
- ADDITIONAL DE-ORBIT $\Delta V \sim 76$ m/sec
- ADDITIONAL RELAY RANGE AT ENTRY ~ 1800 km

MISSION TRADEOFF EXAMPLE

- LAST MIDCOURSE MANEUVER

  EXECUTE FAR FROM MARS

- ORBIT TRIM

  LOWER ENERGY ORBIT

  LINE OF APSIDES ADJUSTMENTS

  ELIMINATE

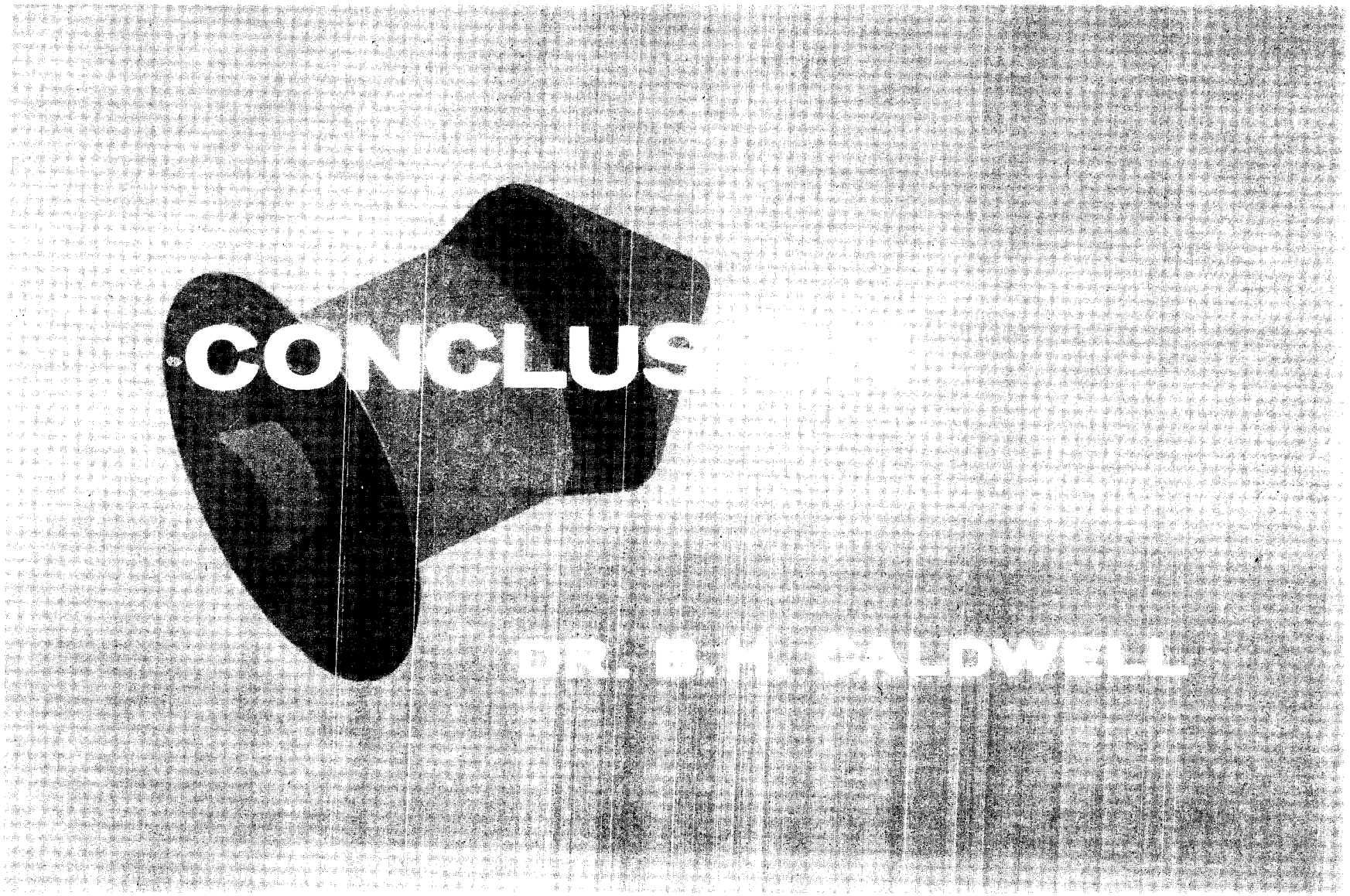
CONCLUS
DR. B.H. CALDWELL

SPACECRAFT DESIGN EVALUATION

SUBSYSTEM	HARDWARE DEVELOPMENT STATUS						REBUNDANC BACK-UP	MISSION FLEXIBILITY
	ITEM	RELATED PROGRAM						
			A*	B*	C*			
TELE-COMMUNICATIONS	TRANSPONDER	MARINER C	●				THREE TRANSP	
	POWER AMPLIFIER (30 W)				●	APOLLO (10 W)	THREE POWER	
	RELAY DETECTOR			●				
	RELAY RECEIVER			●				
	TAPE RECORDER				●	[illegible] TRANSPOR [illegible]	THREE TAPE	MAXIMUM DATA STORAGE
	MAGNETIC CORE MEMORIES			●				
	DATA ENCODER SUBSYSTEM				●	INTEGRATED CIRCUITS	THREE ANAL	BUFFER STORAGE FOR LOW DATA RATE
	COMMAND DETECTOR	MARINER C	●				THREE DETE	SCIENCE DATA AND FOR [illegible]
	COMMAND DECODER				●	INTEGRATED CIRCUITS	DUAL DECODE	DATA [illegible] MANIPULATION
	PRIMARY LOW GAIN ANTENNA	MARINER C	●					
	[illegible]			●			SECONDARY	
	[illegible]			●				
	[illegible]							
	[illegible]							