NATIONAL AERONAUTICS AND SPACE ADMINISTRATION

Technical Report No. 32-871

Sub-Alfvénic Flow in a Duct with a Nonuniform Magnetic Field

Roger Peyret

N66-22809
(ACCESSION NUMBER) (THRU)
25 1
(PAGES) (CODE)
CR-74082 25
(NASA CR OR TMX OR AD NUMBER) (CATEGORY)
FACILITY FORM 602

GPO PRICE $
CFSTI PRICE(S) $
Hard copy (HC) 1.00
Microfiche (MF) .50
ff 653 July 65

JET PROPULSION LABORATORY
CALIFORNIA INSTITUTE OF TECHNOLOGY
PASADENA, CALIFORNIA

April 15, 1966

NATIONAL AERONAUTICS AND SPACE ADMINISTRATION

Technical Report No. 32-871

Sub-Alfvénic Flow in a Duct with a Nonuniform Magnetic Field

Roger Peyret

Alan L Kistler

A. L. Kistler, *Manager*
Fluid Physics Section

JET PROPULSION LABORATORY
CALIFORNIA INSTITUTE OF TECHNOLOGY
PASADENA, CALIFORNIA

April 15, 1966

Copyright © 1966
Jet Propulsion Laboratory
California Institute of Technology

Prepared Under Contract No. NAS 7-100
National Aeronautics & Space Administration

CONTENTS

I. Introduction. Physical Problem and Mathematical Model . . 1

II. Equations 3

A. General Equations 3

B. Linearized Equations 4

III. Flow Field 6

A. Calculation of $v_0^{(1)}$ 6

B. Calculation of $u_0^{(1)}$ and $p_0^{(1)}$ 7

C. Asymptotic Behavior 8

IV. Magnetic Field 8

V. Validity of the Solution 11

VI. Conclusion 13

Appendix A. Asymptotic Behavior of Integrals for Large Positive x 14

Appendix B. Convergence of Fourier Series 14

Appendix C. Asymptotic Behavior of Integrals (83) and (84) for Large x 15

Nomenclature 16

References 17

FIGURES

1. **Real configuration** 2
2. **Mathematical model:** $\widetilde{B}_y^*(0, \widetilde{y}) = 0$ 2
3. **Mathematical model:** $\widetilde{B}_y^*(0, \widetilde{y}) \neq 0$ 3
4. **Magnetic field configuration for the case when** $B_y^*(0, y) = 0$ 12

ABSTRACT

22809

The flow of a conducting fluid in a duct through a nonuniform magnetic field of the following type is considered: for $x < 0$, the field is uniform and parallel to the axis $0x$ of the duct; for $x > 0$, the field is nonuniform and the magnetic lines are slightly curved, so that it is possible to use a small-perturbation theory. Moreover, the magnetic Reynolds number R_m and the Alfvén number A are assumed small. One calculates the flow field, then the induced magnetic field. It is found that the disturbances which are propagated upstream decay exponentially for the flow and algebraically for the magnetic field.

I. INTRODUCTION. PHYSICAL PROBLEM AND MATHEMATICAL MODEL

The object of this analysis is to determine the effect of the nonuniformity of a magnetic field on the flow of an electrically conducting fluid in a duct.

Consider the flow of a conducting fluid through the magnetic field created by a solenoid of finite length. The fluid passes through a nozzle which is designed so that the shape of the inlet follows the magnetic lines. Beyond this nozzle, the cross section of the duct is constant (Fig. 1). Such a device has been conceived by Maxworthy (Refs. 1, 2) for the experimental study of flows with an aligned magnetic field. The object of such a pattern for the nozzle inlet is to avoid the introduction of current or vorticity and, therefore, to get a uniform flow with a uniform, aligned magnetic field in the test section (T). However, the curvature of magnetic lines in the downstream region (D) creates disturbances which, in the sub-Alfvénic case, propagate upstream in the test section (Ref. 2).

Actually, this kind of flow is close to the flow past a body when the applied magnetic field is parallel to the velocity at infinity (Refs. 3, 4). The disturbances created by the obstacle in this latter flow can be compared with those created by the curvature of magnetic lines in the present case. However, one of the differences between these flows is the fact that here the wake, in which the disturbances are propagated, is channeled by the duct walls as soon as it begins to form; the effect of walls plays an important role in the manner of decay of disturbances.

For the physical problem being considered, it is advisable to find a suitable mathematical model to represent the physical phenomena in the best fashion.

Suppose that the axis of both two-dimensional solenoid and duct is the $0\tilde{x}$ axis; then the selected mathematical model is as follows:

For $\tilde{x} > 0$, the nonuniform magnetic field is the real one without flow. For $\tilde{x} < 0$, the magnetic field is uniform and parallel to the $0\tilde{x}$ axis. In other words, the

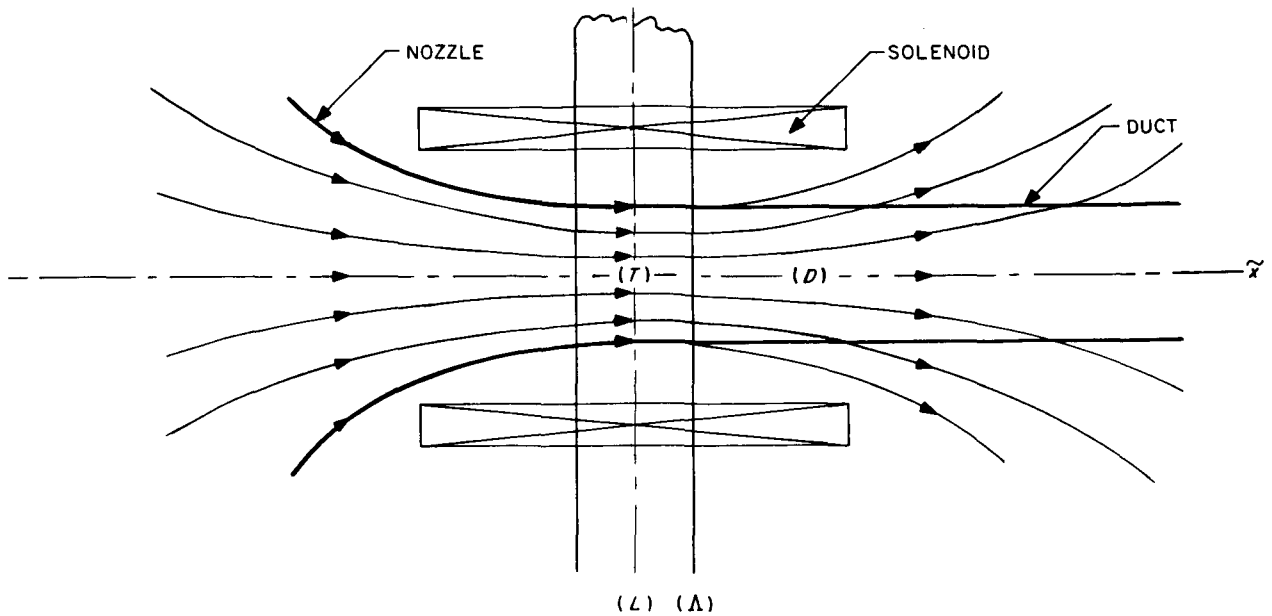

Fig. 1. Real configuration

magnetic lines which arrive at the point $\tilde{x} = 0$ from $\tilde{x} > 0$ are continued by parallel straight lines in the negative half-plane; namely,

$$\tilde{x} > 0 \quad \tilde{\mathbf{B}}_{\text{appl}}(\tilde{x}, \tilde{y}) = [\tilde{B}_0 + \epsilon \tilde{B}_x^*(\tilde{x}, \tilde{y})]\,\tilde{\mathbf{x}} + \epsilon \tilde{B}_y^*(\tilde{x}, \tilde{y})\,\tilde{\mathbf{y}}$$

$$\tilde{x} < 0 \quad \tilde{\mathbf{B}}_{\text{appl}}(\tilde{x}, \tilde{y}) = \tilde{B}_0\,\tilde{\mathbf{x}} \tag{1}$$

In these expressions, $\tilde{B}_0$ is a constant and ϵ is a dimensionless parameter which characterizes the magnitude of the nonuniform field.

However, from the mathematical point of view the region where the real magnetic field, without flow, is parallel to $0\tilde{x}$ actually reduces to a straight line (L) orthogonal to the $0\tilde{x}$ axis (Fig. 1). Then, it will have two possibilities according as we choose for the $0\tilde{y}$ axis either this (L) line or the (Λ) line which separates the regions (T) and (D).

1. If (L) is taken for the $0\tilde{y}$ axis (Fig. 2), the nonuniform field for $\tilde{x} > 0$ is the real field, while the field for $\tilde{x} < 0$ is uniform ($\equiv \tilde{B}_0\,\tilde{\mathbf{x}}$); we have

$$\tilde{B}_y^*(0, \tilde{y}) = 0 \tag{2}$$

2. If the region (T) is assumed to spread upstream to infinity, the line (L) is moved to infinity and the real magnetic configuration is as follows: From upstream infinity to line (Λ), which is at a finite distance — and which is selected for the $0\tilde{y}$ axis — the curvature of magnetic lines is infinitely small [region (T)]; this curvature is so small in comparison with the curvature of magnetic lines in the downstream region (D) that disturbances which are created in (T) are negligible. Under these conditions, the mathematical model (Fig. 3) is constructed so that the nonuniform field for $\tilde{x} > 0$ is the real field in (D) while for $\tilde{x} < 0$ the field is uniform. Therefore

$$\tilde{B}_y^*(0, \tilde{y}) \neq 0 \tag{3}$$

and the magnetic lines show a discontinuity in slope at $\tilde{x} = 0$.

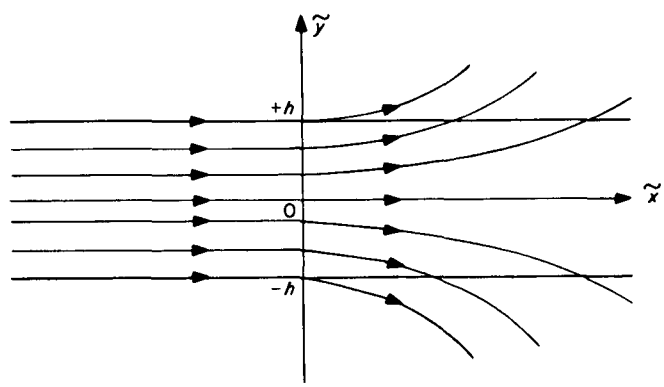

Fig. 2. Mathematical model: $\tilde{B}_y^*(0, \tilde{y}) = 0$

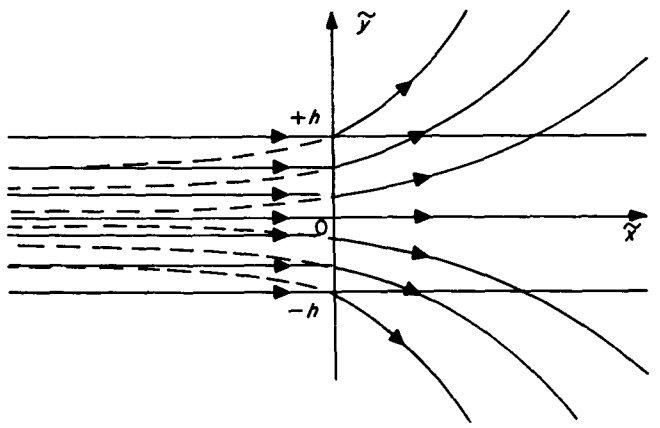

Fig. 3. Mathematical model: $\tilde{B}_y^*(0, \tilde{y}) \neq 0$

Now, in introducing the Heaviside function $H(x)$ so that

$$H(\tilde{x}) = 1 \qquad \text{if } \tilde{x} > 0$$
$$H(\tilde{x}) = 0 \qquad \text{if } \tilde{x} < 0$$

expressions (1) must be written:

$$\tilde{\mathbf{B}}_{\text{appl}}(\tilde{x}, \tilde{y}) = \tilde{B}_0 \tilde{\mathbf{x}} + \epsilon H(\tilde{x}) \left[\tilde{B}_x^*(\tilde{x}, \tilde{y}) \tilde{\mathbf{x}} + \tilde{B}_y^*(\tilde{x}, \tilde{y}) \tilde{\mathbf{y}}\right] \tag{4}$$

In other words, the applied magnetic field can be considered as the superposition of a uniform field $B_0 \mathbf{x}$ and a nonuniform field

$$\epsilon H(\tilde{x}) \left[\tilde{B}_x^*(\tilde{x}, \tilde{y}) \tilde{\mathbf{x}} + \tilde{B}_y^*(\tilde{x}, \tilde{y}) \tilde{\mathbf{y}}\right]$$

The following formal analysis is valid whatever the form of this latter field which must satisfy the Maxwell equation ($\tilde{B}_x^*$ and $\tilde{B}_y^*$ are conjugate harmonic functions); we shall need to specify the asymptotic behavior of $\tilde{B}_y^*(\tilde{x}, \tilde{y})$ for infinite $\tilde{x}$; and, in the case of a finite solenoid, $\tilde{B}_y^*$ is known to tend toward zero as x^{-4}.

In this study, the parameter ϵ will be assumed to be small; this hypothesis will permit the use of a small-perturbation theory. Moreover, the question of boundary conditions at walls for the magnetic field will lead us to assume a small magnetic Reynolds number, so that it will be possible to neglect the induced field (Section II). The flow quantities will be calculated in Section III; in this same section the higher approximation for the magnetic field will be determined from the solution for the velocity. Finally, Section V will be devoted to a discussion of the solution.

II. EQUATIONS

A. General Equations

We consider the steady, two-dimensional flow, in a channel of infinite length and height $2h$, of an incompressible, inviscid, nonthermally conducting fluid of electrical conductivity σ and magnetic permeability μ; this flow is subjected to the magnetic field defined by Eq. (4)—the electric field is assumed to be zero.

Let $\tilde{\mathbf{B}}$ be the magnetic induction, $\tilde{\mathbf{V}}$ the flow velocity, $\tilde{p}$ the pressure, and $\tilde{\rho}$ the constant density. When $\epsilon = 0$, the applied magnetic field is uniform and parallel to the flow; therefore, its effect is zero and the uniform flow is characterized by $\tilde{\mathbf{V}}_0 = \tilde{V}_0 \tilde{\mathbf{x}}$, $\tilde{p}_0$, $\tilde{\rho}_0 (\equiv \tilde{\rho})$. Let us introduce the following dimensionless quantities:

$$x = \frac{\tilde{x}}{h} \qquad y = \frac{\tilde{y}}{h}$$

$$\mathbf{B} = \frac{\tilde{\mathbf{B}}}{\tilde{B}_0} = (B_x, B_y) \qquad \mathbf{V} = \frac{\tilde{\mathbf{V}}}{\tilde{V}_0} = (u, v) \qquad p = \frac{\tilde{p}}{\tilde{\rho}_0 \tilde{V}_0^2} \tag{5}$$

$$\mathbf{B}_{\text{appl}} = \mathbf{x} + \epsilon H(x) \left[B_x^* \mathbf{x} + B_y^* \mathbf{y}\right]$$

Under these conditions and with the usual hypothesis of magnetofluid dynamics, the equations are

$$\frac{\partial u}{\partial x} + \frac{\partial v}{\partial y} = 0 \tag{6}$$

$$u \frac{\partial u}{\partial x} + v \frac{\partial u}{\partial y} + \frac{\partial p}{\partial x} = -N B_y (u B_y - v B_x) \tag{7}$$

$$u \frac{\partial v}{\partial x} + v \frac{\partial v}{\partial y} + \frac{\partial p}{\partial y} = N B_x (u B_y - v B_x) \tag{8}$$

$$\frac{\partial B_x}{\partial x} + \frac{\partial B_y}{\partial y} = 0 \tag{9}$$

$$\frac{\partial B_y}{\partial x} - \frac{\partial B_x}{\partial y} = R_m (u B_y - v B_x) \tag{10}$$

where

$$R_m = \mu \sigma \widetilde{V}_0 h \tag{11}$$

is the magnetic Reynolds number

$$N = \frac{\sigma \widetilde{B}_0^2 h}{\rho_0 \widetilde{V}_0} = \frac{R_m}{A^2} \tag{12}$$

is the interaction parameter and

$$A^2 = \frac{\mu \widetilde{\rho}_0 \widetilde{V}_0^2}{\widetilde{B}_0^2} \tag{13}$$

is the square of the Alfvén number. The boundary conditions will be discussed later.

B. Linearized Equations

Now, ϵ is assumed to be small; in other words, the curvature of magnetic lines in the region $x \geqslant 0$ is small and we are concerned with the perturbation fields induced by this curvature. For that, we assume that asymptotic expansions of the following form exist:

$$\begin{aligned} u(x, y; \epsilon, R_m, N) &= 1 + \delta_1(\epsilon)\, u^{(1)}(x, y; R_m, N) + \cdots \\ v(x, y; \epsilon, R_m, N) &= \delta_2(\epsilon)\, v^{(1)}(x, y; R_m, N) + \cdots \\ p(x, y; \epsilon, R_m, N) &= p_0 + \delta_3(\epsilon)\, p^{(1)}(x, y; R_m, N) + \cdots \end{aligned} \tag{14}$$

and

$$\begin{aligned} B_x(x, y; \epsilon, R_m, N) &= 1 + \epsilon H(x)\, B_x^*(x, y) \\ &\quad + \delta_4(\epsilon)\, b_x^{(1)}(x, y; R_m, N) + \cdots \\ B_y(x, y; \epsilon, R_m, N) &= \epsilon H(x)\, B_y^*(x, y) \\ &\quad + \delta_5(\epsilon)\, b_y^{(1)}(x, y; R_m, N) + \cdots \end{aligned} \tag{15}$$

where the $\delta_i(\epsilon)$ are infinitely small with ϵ and are determined so that the equations have meaning; the quantities $b_x^{(1)}$ and $b_y^{(1)}$ are the components of the magnetic field induced by the perturbation flow. The study of the linearized equations obtained from expansions (14) and (15) shows that we must have

$$\delta_i(\epsilon) = \epsilon \qquad (i = 1, \cdots, 5) \tag{16}$$

Therefore, the linearized equations are:

$$\frac{\partial u^{(1)}}{\partial x} + \frac{\partial v^{(1)}}{\partial y} = 0 \tag{17}$$

$$\frac{\partial u^{(1)}}{\partial x} + \frac{\partial p^{(1)}}{\partial x} = 0 \tag{18}$$

$$\frac{\partial v^{(1)}}{\partial x} + \frac{\partial p^{(1)}}{\partial y} = N \left[H(x)\, B_y^* + b_y^{(1)} - v^{(1)} \right] \tag{19}$$

$$\frac{\partial b_x^{(1)}}{\partial x} + \frac{\partial b_y^{(1)}}{\partial y} = 0 \tag{20}$$

$$\frac{\partial b_y^{(1)}}{\partial x} - \frac{\partial b_x^{(1)}}{\partial y} = R_m \left[H(x)\, B_y^* + b_y^{(1)} - v^{(1)} \right] \tag{21}$$

Now, introducing the only component of vorticity, $\omega^{(1)}$,

$$\omega^{(1)} = \frac{\partial v^{(1)}}{\partial x} - \frac{\partial u^{(1)}}{\partial y} \tag{22}$$

and $j^{(1)}$, the only component of current,

$$j^{(1)} = \frac{\partial b_y^{(1)}}{\partial x} - \frac{\partial b_x^{(1)}}{\partial y} \tag{23}$$

Eqs. (17)–(21) give

$$\omega^{(1)} = \frac{1}{A^2} j^{(1)} \tag{24}$$

Moreover, $\omega^{(1)}$ and $j^{(1)}$ satisfy the same equation:

$$\left[\frac{\partial^2}{\partial x^2} + \frac{\partial^2}{\partial y^2} - R_m \frac{A^2 - 1}{A^2} \frac{\partial}{\partial x} \right] \begin{pmatrix} \omega^{(1)} \\ j^{(1)} \end{pmatrix} = \begin{pmatrix} 1 \\ A^2 \end{pmatrix} N \times \left(\frac{\partial^2}{\partial x^2} + \frac{\partial^2}{\partial y^2} \right) \left[H(x)\, B_y^* \right] \tag{25}$$

The left-hand side of Eq. (25) is identical with the left-hand side of the equation studied by Lary (Ref. 3) in the

case of flow past a thin airfoil with aligned uniform magnetic field. This equation allows us to forecast already the possibility of disturbances (created here by the curvature of magnetic lines) propagating upstream when the Alfvén number is smaller than 1.

Now, we must consider the boundary conditions:

$$\text{for } x \to \pm\infty \qquad u^{(1)}, v^{(1)}, p^{(1)}, b_x^{(1)}, b_y^{(1)} \to 0 \tag{26}$$

$$\text{for } y = \pm 1 \qquad v^{(1)} = 0 \tag{27}$$

These boundary conditions are not sufficient; it is necessary to prescribe conditions on the magnetic field. The electrical conductivity of the wall is not infinite; therefore, the magnetic field must be continuous through the wall and must be matched with the outer induced field, the two components of which are a pair of conjugate harmonic functions. In the present case, because this problem leads to serious difficulties, we shall assume now that

$$R_m \ll 1 \tag{28}$$

Under this hypothesis, the induced magnetic field can be neglected in a first approximation and the flow can be determined without boundary conditions for the field.

Now, it is convenient to express the magnitude of the parameter R_m in expansions (14) and (15):

$$\begin{aligned} u^{(1)}(x, y; R_m, N) &= u_0^{(1)}(x, y; N) + R_m u_1^{(1)}(x, y; N) + \cdots \\ v^{(1)}(x, y; R_m, N) &= v_0^{(1)}(x, y; N) + R_m v_1^{(1)}(x, y; N) + \cdots \\ p^{(1)}(x, y; R_m, N) &= p_0^{(1)}(x, y; N) + R_m p_1^{(1)}(x, y; N) + \cdots \end{aligned} \tag{29}$$

$$\begin{aligned} b_x^{(1)}(x, y; R_m, N) &= R_m b_{x1}^{(1)}(x, y; N) + \cdots \\ b_y^{(1)}(x, y; R_m, N) &= R_m b_{y1}^{(1)}(x, y; N) + \cdots \end{aligned} \tag{30}$$

The equations which must be satisfied by $u_0^{(1)}$, $v_0^{(1)}$, and $p_0^{(1)}$ are

$$\frac{\partial u_0^{(1)}}{\partial x} + \frac{\partial v_0^{(1)}}{\partial y} = 0 \tag{31}$$

$$\frac{\partial u_0^{(1)}}{\partial x} + \frac{\partial p_0^{(1)}}{\partial x} = 0 \tag{32}$$

$$\frac{\partial v_0^{(1)}}{\partial x} + \frac{\partial p_0^{(1)}}{\partial y} = N\left[H(x)\, B_y^* - v_0^{(1)}\right] \tag{33}$$

With hypothesis (28), the interaction parameter N will not be infinitely small if

$$A^2 \ll 1 \tag{34}$$

This new condition means that the flow is very sub-Alfvénic. Equations (31)–(33) give an equation for $v_0^{(1)}$ only:

$$\frac{\partial^2 v_0^{(1)}}{\partial x^2} + \frac{\partial^2 v_0^{(1)}}{\partial y^2} + N\frac{\partial v_0^{(1)}}{\partial x} = N\frac{\partial}{\partial x}\left[H(x)\, B_y^*\right] \tag{35}$$

with the boundary conditions

$$\text{for } x \to \pm\infty \qquad v_0^{(1)} \to 0 \tag{36}$$

$$\text{for } y = \pm 1 \qquad v_0^{(1)} = 0 \tag{37}$$

Note that (1) the component $B_y^*(x, y)$ is the only one to play a role in the problem, and (2) the presence of the Heaviside function as well as its "derivative" indicates a singularity at $x = 0$.

III. FLOW FIELD

A. Calculation of $v_0^{(1)}$

The function $B_y^*(x, y)$ in the right-hand side of Eq. (35) is odd with respect to y. The unknown $v_0^{(1)}(x, y)$ is odd also and must be zero at $y = \pm 1$. Therefore, it seems to be convenient to look for the solution in terms of Fourier sine series:

$$v_0^{(1)}(x, y) = \sum_{n=1}^{\infty} v_n(x) \sin n\pi y \tag{38}$$

The function $B_y^*(x, y)$ can also be expanded in a Fourier series:

$$B_y^*(x, y) = \sum_{n=1}^{\infty} B_n(x) \sin n\pi y \tag{39}$$

Note that the Relation (39) gives $B_y^*(x, \pm 1) = 0$, while actually the value of B_y^* at $y = \pm 1$ is nonzero. Consequently, in order to have a good representation of the actual B_y^* it is necessary to consider a large number of terms in the Fourier series.

Now, $v_n(x)$ must satisfy the following equation:

$$v_n'' + N v_n' - n^2 \pi^2 v_n = N \frac{d}{dx}\left[H(x) B_n(x)\right] \tag{40}$$

with

$$v_n(x) \to 0 \quad \text{when } x \to \pm \infty \tag{41}$$

We can consider separately both equations, respectively, for $x < 0$ and $x > 0$

$$x < 0 \qquad v_n'' + N v_n' - n^2 \pi^2 v_n = 0 \tag{42}$$

$$x > 0 \qquad v_n'' + N v_n' - n^2 \pi^2 v_n = N B_n' \tag{43}$$

Then, the singularity appears in the boundary conditions at $x = 0$: (1) $v_n(x)$ is continuous at $x = 0$,

$$v_n(+0) - v_n(-0) = 0 \tag{44}$$

(2) One condition on $v_n'(x)$ at $x = 0$ is obtained by integrating Eq. (40) between $-\kappa$ and κ, and considering the limit when κ tends toward zero:

$$v_n'(+0) - v_n'(-0) = N B_n(0) \tag{45}$$

The importance of the value of $B_y^*(x, y)$ at $x = 0$ appears in this latter equation. If $B_y^*(x, y) = 0$, then $B_n(0) = 0$ and $v_n'(x)$ is continuous at $x = 0$. On the other hand, if $B_y^*(0, y) \neq 0$, $v_n'(x)$ is discontinuous at $x = 0$.

It is not difficult to solve Eqs. (42)–(43). The associated homogeneous equation has the following solutions

$$e^{\lambda_n^{(+)} x} \qquad e^{\lambda_n^{(-)} x} \tag{46}$$

with

$$\lambda_n^{(\pm)} = \frac{-N \pm \sqrt{N^2 + 4 n^2 \pi^2}}{2} \tag{47}$$

Then, the general solutions of (42) and (43) are

$$x < 0 \qquad v_n(x) = K_n^{(1)} e^{\lambda_n^{(+)} x} + K_n^{(2)} e^{\lambda_n^{(-)} x} \tag{48}$$

$$x > 0 \qquad v_n(x) = C_n^{(1)}(x) e^{\lambda_n^{(+)} x} + C_n^{(2)}(x) e^{\lambda_n^{(-)} x} \tag{49}$$

where $K_n^{(1)}$ and $K_n^{(2)}$ are integration constants, as yet undetermined; $C_n^{(1)}(x)$ and $C_n^{(2)}(x)$ are functions of x which are determined in using the classical method of "variation of parameters." We find

$$x > 0 \qquad v_n(x) = \frac{N}{\lambda_n^{(+)} - \lambda_n^{(-)}} \left\{ \left[\int_0^x e^{-\lambda_n^{(+)} \xi} \frac{dB_n}{d\xi} d\xi + K_n^{(3)} \right] e^{\lambda_n^{(+)} x} - \left[\int_0^x e^{-\lambda_n^{(-)} \xi} \frac{dB_n}{d\xi} d\xi + K_n^{(4)} \right] e^{\lambda_n^{(-)} x} \right\} \tag{50}$$

The constants $K_n^{(1)}$, $K_n^{(2)}$, $K_n^{(3)}$, and $K_n^{(4)}$ are determined by the boundary conditions. The conditions at infinity give

$$K_n^{(2)} = 0 \tag{51}$$

$$K_n^{(3)} = -\int_0^\infty e^{-\lambda_n^{(+)}\xi} \frac{dB_n}{d\xi} d\xi \tag{52}$$

The conditions at $x = 0$ give

$$K_n^{(1)} = -\frac{\lambda_n^{(+)} N}{\lambda_n^{(+)} - \lambda_n^{(-)}} \int_0^\infty e^{-\lambda_n^{(+)}\xi} B_n(\xi)\, d\xi \tag{53}$$

$$K_n^{(4)} = B_n(0) \tag{54}$$

Then, the solution of Eq. (42) is written as

$$v_n(x) = \frac{-N}{\lambda_n^{(+)} - \lambda_n^{(-)}} \left\{ \lambda_n^{(+)} \left[\int_0^\infty e^{-\lambda_n^{(+)}\xi} B_n(\xi)\, d\xi \right] H(-x)\, e^{\lambda_n^{(+)} x} \right.$$
$$\left. + H(x) \left[\lambda_n^{(+)} e^{\lambda_n^{(+)} x} \int_x^\infty e^{-\lambda_n^{(+)}\xi} B_n(\xi)\, d\xi + \lambda_n^{(-)} e^{\lambda_n^{(-)} x} \int_0^x e^{-\lambda_n^{(-)}\xi} B_n(\xi)\, d\xi \right] \right\} \tag{55}$$

B. Calculation of $u_0^{(1)}$ and $p_0^{(1)}$

With the boundary conditions at infinity, Eq. (31) yields

$$u_0^{(1)}(x, y) = -p_0^{(1)}(x, y) \tag{56}$$

and if we look again for the solution for $u_0^{(1)}$ and $p_0^{(1)}$ in terms of Fourier series

$$u_0^{(1)}(x, y) = \sum_{n=0}^{\infty} u_n(x) \cos n\pi y \tag{57}$$

$$p_0^{(1)}(x, y) = \sum_{n=0}^{\infty} p_n(x) \cos n\pi y \tag{58}$$

we obtain from Eq. (33)

$$u_0(x) = p_0(x) = 0$$

and, for $n \geqslant 1$,

$$u_n(x) = -p_n(x) = \frac{n\pi N}{\lambda_n^{(+)} - \lambda_n^{(-)}} \left\{ \left[\int_0^\infty e^{-\lambda_n^{(+)}\xi} B_n(\xi)\, d\xi \right] H(-x)\, e^{\lambda_n^{(+)} x} \right.$$
$$\left. + H(x) \left[e^{\lambda_n^{(+)} x} \int_x^\infty e^{-\lambda_n^{(+)}\xi} B_n(\xi)\, d\xi + e^{\lambda_n^{(-)} x} \int_0^x e^{-\lambda_n^{(-)}\xi} B_n(\xi)\, d\xi \right] \right\} \tag{59}$$

Note that the first derivatives of $u_n(x)$ and $p_n(x)$ are always continuous at $x = 0$ for zero or nonzero values of $B_y^*(0, y)$.

C. *Asymptotic Behavior*

For $x \to -\infty$, expressions (55) and (59) show that $v_n(x)$, $u_n(x)$, and $p_n(x)$ tend toward zero as $e^{\lambda_n^{(+)} x}$, where $\lambda_n^{(+)}$, which is defined by Eq. (47), is an increasing function of n.

For $x \to +\infty$, $v_n(x)$ tends toward zero as x^{-5}, while $u_n(x)$ and $p_n(x)$ behave as x^{-4} (see Appendix A).

In addition, it is possible to see that the Fourier series, the coefficients of which appear in (55) and (59), are absolutely and uniformly convergent for all x and all $|y| \leqslant 1$ (see Appendix B). Therefore, they determine continuous functions which tend toward zero when $x \to \pm\infty$. This being so, the asymptotic behavior of the solution given by Eqs. (55) and (59) for negative infinite x is obtained in considering only the first term of Fourier expansions, namely

$$v_0^{(1)}(x, y) \sim -\frac{\lambda_1^{(+)} N}{\lambda_1^{(+)} - \lambda_1^{(-)}} \left[\int_0^\infty e^{-\lambda_1^{(+)} \xi} B_1(\xi)\, d\xi \right] e^{\lambda_1^{(+)} x} \sin \pi y \tag{60}$$

$$u_0^{(1)}(x, y) = -p_0^{(1)}(x, y) \sim \frac{\pi N}{\lambda_1^{(+)} - \lambda_1^{(-)}} \left[\int_0^\infty e^{-\lambda_1^{(+)} \xi} B_1(\xi)\, d\xi \right] e^{\lambda_1^{(+)} x} \cos \pi y \tag{61}$$

Thus, the propagation of disturbances upstream is made evident; moreover, the decay of these disturbances is exponential.

Downstream, the perturbation flow quantities decrease algebraically; this behavior depends directly on the local applied magnetic field.

These results, the validity of which will be discussed in Section V, lead to analogous conclusions for the corresponding vorticity.

IV. MAGNETIC FIELD

With the hypothesis that $R_m \ll 1$, the magnetic field has been neglected in the determination of flow field at the order of the approximation considered. But, knowing the solution $v_0^{(1)}$, it is possible to calculate the higher approximation for the magnetic field, $b_{x1}^{(1)}$ and $b_{y1}^{(1)}$. These two quantities are solutions of

$$\frac{\partial^2 b_{x1}^{(1)}}{\partial x^2} + \frac{\partial^2 b_{x1}^{(1)}}{\partial y^2} = -\frac{\partial}{\partial y}\left[H(x) B_y^* - v_0^{(1)}\right] \tag{62}$$

$$\frac{\partial^2 b_{y1}^{(1)}}{\partial x^2} + \frac{\partial^2 b_{y1}^{(1)}}{\partial y^2} = \frac{\partial}{\partial x}\left[H(x) B_y^* - v_0^{(1)}\right] \tag{63}$$

At infinity $b_{x1}^{(1)}$ and $b_{y1}^{(1)}$ must tend toward zero, but the problem of boundary conditions at $y = \pm 1$ still remains. However, the knowledge of $v_0^{(1)}$ in terms of a Fourier series permits one to obtain a particular solution of (62) or (63) in terms of an analogous series. Then, to this particular solution we must add an harmonic function, which can be determined by considering the magnetic problem outside the duct. The two components of the outer magnetic field are conjugate harmonic functions. We have to write the continuity of the two components of the field through the walls.

Fundamentally, this problem is the same as that mentioned in Section II for the full equations (17)–(21), but now it is simplified by the fact that we have one equation for $b_{x1}^{(1)}$ (or $b_{y1}^{(1)}$) only, this equation being of the Poisson type.

Let the particular solutions be

$$(b_{x1}^{(1)})_p = \sum_{n=0}^{\infty} b_n(x) \cos n\pi y \tag{64}$$

$$(b_{y1}^{(1)})_p = \sum_{n=1}^{\infty} \beta_n(x) \sin n\pi y \tag{65}$$

The method of solution is identical to the one which has been used for $v_0^{(1)}$. We have for $b_n(x)$, for example,

$$b_n'' - n^2 \pi^2 b_n = -n\pi \left[H(x) B_n - v_n\right] \tag{66}$$

with $b_n(x) \to 0$ when $x \to \pm \infty$. At $x = 0$, $b_n(x)$ and its first derivative are continuous. The calculation of $b_n(x)$ is straightforward; we find

$$b_0(x) = 0$$

and for $n \geqslant 1$

$$\begin{aligned}
b_n(x) = {} & H(-x) \left[D_n^{(1)} e^{\lambda_n^{(+)} x} + D_n^{(2)} e^{n\pi x}\right] \\
& + \frac{1}{2} H(x) \Bigg\{ e^{n\pi x} \Bigg[\int_x^{\infty} e^{-n\pi\xi} B_n(\xi)\, d\xi \\
& + \frac{\lambda_n^{(+)} N}{\lambda_n^{(+)} - \lambda_n^{(-)}} \int_x^{\infty} e^{\left(\lambda_n^{(+)} - n\pi\right)\xi} \int_\xi^{\infty} e^{-\lambda_n^{(+)}\eta} B_n(\eta)\, d\eta\, d\xi \\
& + \frac{\lambda_n^{(-)} N}{\lambda_n^{(+)} - \lambda_n^{(-)}} \int_x^{\infty} e^{\left(\lambda_n^{(-)} - n\pi\right)\xi} \int_0^{\xi} e^{-\lambda_n^{(-)}\eta} B_n(\eta)\, d\eta\, d\xi \Bigg] \\
& + e^{-n\pi x} \Bigg[\int_0^x e^{n\pi\xi} B_n(\xi)\, d\xi + \frac{\lambda_n^{(+)} N}{\lambda_n^{(+)} - \lambda_n^{(-)}} \int_0^x e^{\left(\lambda_n^{(+)} + n\pi\right)\xi} \int_\xi^{\infty} e^{-\lambda_n^{(+)}\eta} B_n(\eta)\, d\eta\, d\xi \\
& + \frac{\lambda_n^{(-)} N}{\lambda_n^{(+)} - \lambda_n^{(-)}} \int_0^x e^{\left(\lambda_n^{(-)} + n\pi\right)\xi} \int_0^{\xi} e^{-\lambda_n^{(-)}\eta} B_n(\eta)\, d\eta\, d\xi + D_n^{(3)} \Bigg] \Bigg\}
\end{aligned} \tag{67}$$

where

$$\begin{aligned}
D_n^{(1)} &= \frac{n\pi}{\lambda_n^{(+)} - \lambda_n^{(-)}} \int_0^{\infty} e^{-\lambda_n^{(+)}\xi} B_n(\xi)\, d\xi \\
D_n^{(2)} &= \frac{1}{2} \int_0^{\infty} e^{-n\pi\xi} B_n(\xi)\, d\xi + \frac{\lambda_n^{(+)} N}{2\left(\lambda_n^{(+)} - \lambda_n^{(-)}\right)} \\
&\quad \times \int_0^{\infty} e^{\left(\lambda_n^{(+)} - n\pi\right)\xi} \int_\xi^{\infty} e^{-\lambda_n^{(+)}\eta} B_n(\eta)\, d\eta\, d\xi \\
&\quad + \frac{\lambda_n^{(-)} N}{2\left(\lambda_n^{(+)} - \lambda_n^{(-)}\right)} \int_0^{\infty} e^{\left(\lambda_n^{(-)} - n\pi\right)\xi} \\
&\quad \times \int_0^{\xi} e^{-\lambda_n^{(-)}\eta} B_n(\eta)\, d\eta\, d\xi - \frac{n\pi + \lambda_n^{(+)}}{2\left(\lambda_n^{(+)} - \lambda_n^{(-)}\right)} \\
&\quad \times \int_0^{\infty} e^{-\lambda_n^{(+)}\xi} B_n(\xi)\, d\xi
\end{aligned} \tag{68}$$

$$D_n^{(3)} = \frac{n\pi - \lambda_n^{(+)}}{\left(\lambda_n^{(+)} - \lambda_n^{(-)}\right)} \int_0^{\infty} e^{-\lambda_n^{(+)}\xi} B_n(\xi)\, d\xi$$

Equation (20) gives

$$\beta_n(x) = -\frac{1}{n\pi} b'_n(x) \tag{69}$$

Therefore, it is possible to calculate $\beta_n(x)$ from (67). As for $u_0^{(1)}(x, y)$ and $v_0^{(1)}(x, y)$ it is possible to demonstrate the absolute and uniform convergence of Fourier series for $(b_{x1}^{(1)})_p$ and $(b_{y1}^{(1)})_p$.

Now, consider the following three regions of the x, y plane:

Inner region	$-1 \leqslant y \leqslant 1$	$-\infty \leqslant x \leqslant +\infty$
Outer positive region	$y > 1$	$-\infty \leqslant x \leqslant +\infty$
Outer negative region	$y < -1$	$-\infty \leqslant x \leqslant +\infty$

Let $b_{x1}^{(1)}$ and $b_{y1}^{(1)}$ be the solutions of (62) and (63) in the inner region, i.e., the sum of the particular solutions (64) – (65) and harmonic functions. In the same manner $b_x^{(0+)}$, $b_y^{(0+)}$, and $b_x^{(0-)}$, $b_y^{(0-)}$ are the components of the outer field.

We can write

$$b_{x1}^{(1)}(x, y) = \sum_{n=1}^{\infty} b_n(x) \cos n\pi y + \int_0^{\infty} (\cosh \alpha y)\,[A_1(\alpha) \cos \alpha x + B_1(\alpha) \sin \alpha x]\, d\alpha$$

$$b_{y1}^{(1)}(x, y) = \sum_{n=1}^{\infty} \beta_n(x) \sin n\pi y - \int_0^{\infty} (\sinh \alpha y)\,[B_1(\alpha) \cos \alpha x - A_1(\alpha) \sin \alpha x]\, d\alpha \tag{70}$$

$$b_x^{(0+)}(x, y) = \int_0^{\infty} e^{-\alpha y}\,[A_0(\alpha) \cos \alpha x + B_0(\alpha) \sin \alpha x]\, d\alpha$$

$$b_y^{(0+)}(x, y) = \int_0^{\infty} e^{-\alpha y}\,[B_0(\alpha) \cos \alpha x - A_0(\alpha) \sin \alpha x]\, d\alpha \tag{71}$$

For $b_x^{(0-)}$ and $b_y^{(0-)}$ which correspond to the region $y < -1$, it is sufficient, taking account of the symmetry, to replace $e^{-\alpha y}$ by $e^{\alpha y}$ in $b_x^{(0+)}$ and $e^{-\alpha y}$ by $-e^{\alpha y}$ in $b_y^{(0+)}$. Moreover, because of this symmetry, it is necessary to specify the continuity of the magnetic field only at $y = +1$. That will determine the four functions $A_0(\alpha)$, $B_0(\alpha)$ and $A_1(\alpha)$, $B_1(\alpha)$ which are not yet known. Therefore

$$\sum_{n=1}^{\infty} (-1)^n b_n(x) + \int_0^{\infty} (\cosh \alpha)\,[A_1(\alpha) \cos \alpha x + B_1(\alpha) \sin \alpha x]\, d\alpha = \int_0^{\infty} e^{-\alpha}\,[A_0(\alpha) \cos \alpha x + B_0(\alpha) \sin \alpha x]\, d\alpha \tag{72}$$

$$\int_0^{\infty} (\sinh \alpha)\,[B_1(\alpha) \cos \alpha x - A_1(\alpha) \sin \alpha x]\, d\alpha = -\int_0^{\infty} e^{-\alpha}\,[B_0(\alpha) \cos \alpha x - A_0(\alpha) \sin \alpha x]\, d\alpha \tag{73}$$

Now, let

$$F(x) = \sum_{n=1}^{\infty} (-1)^n b_n(x) = H(-x)\, F^{(-)}(x) + H(x)\, F^{(+)}(x) \tag{74}$$

where

$$F^{(-)}(x) = \sum_{n=1}^{\infty} (-1)^n b_n^{(-)}(x) \qquad F^{(+)}(x) = \sum_{n=1}^{\infty} (-1)^n b_n^{(+)}(x) \tag{75}$$

and the expressions $b_n^{\pm}(x)$ are given by Eq. (67).

Each of the series (75) is absolutely and uniformly convergent for all x. Then the function $F^{(\pm)}(x)$ are continuous and bounded; therefore $F(x)$ verifies the Dirichlet conditions. Moreover, it is easy to see that $F^{(-)}(x)$ decreases as $e^{\lambda_1^{(+)} x}$ for large negative x and $F^{(+)}(x)$ decreases as x^{-4} for large positive x. This being so, in the Fourier integral

$$F(x) = \frac{1}{\pi} \int_{-\infty}^{\infty} F(\xi) \int_0^{\infty} \cos \alpha (\xi - x)\, d\alpha\, d\xi \tag{76}$$

We can invert the two integrations and, substituting Eq. (76) in Eq. (72), we see that the conditions (72) – (73) will be satisfied if

$$A_0(\alpha) = \frac{\sinh \alpha}{\pi} \int_{-\infty}^{\infty} F(\xi) \sin \alpha \xi\, d\xi$$

$$B_0(\alpha) = \frac{\sinh \alpha}{\pi} \int_{-\infty}^{\infty} F(\xi) \cos \alpha \xi\, d\xi \tag{77}$$

$$A_1(\alpha) = -\frac{e^{-\alpha}}{\pi} \int_{-\infty}^{\infty} F(\xi) \cos \alpha \xi\, d\xi$$

$$B_1(\alpha) = -\frac{e^{-\alpha}}{\pi} \int_{-\infty}^{\infty} F(\xi) \sin \alpha \xi\, d\xi \tag{78}$$

Thus, the expressions (70) give the solution in the region $-1 \leqslant y \leqslant 1$:

$$b_{x1}^{(1)}(x, y) = \sum_{n=1}^{\infty} b_n(x) \cos n\pi y - \frac{1}{\pi}\int_{-\infty}^{\infty} F(\xi) \int_0^{\infty} e^{-\alpha} \cosh \alpha y \quad \cos \alpha (\xi - x)\, d\alpha\, d\xi \tag{79}$$

$$b_{y1}^{(1)}(x, y) = \sum_{n=1}^{\infty} \beta_n(x) \sin n\pi y + \frac{1}{\pi}\int_{-\infty}^{\infty} F(\xi) \int_0^{\infty} e^{-\alpha} \sinh \alpha y \quad \sin \alpha (\xi - x)\, d\alpha\, d\xi \tag{80}$$

In integrating with respect to α, it is found that

$$b_{x1}^{(1)}(x, y) = \sum_{n=1}^{\infty} b_n(x) \cos n\pi y - \frac{1}{2\pi}\int_{-\infty}^{\infty}\left[\frac{1-y}{(1-y)^2 + (\xi-x)^2} + \frac{1+y}{(1+y)^2 + (\xi-x)^2}\right] F(\xi) d\xi \tag{81}$$

$$b_{y1}^{(1)}(x, y) = \sum_{n=1}^{\infty} \beta_n(x) \sin n\pi y + \frac{1}{2\pi}\int_{-\infty}^{\infty}\left[\frac{1}{(1-y)^2 + (\xi-x)^2} - \frac{1}{(1+y)^2 + (\xi-x)^2}\right](\xi-x)\, F(\xi)\, d\xi \tag{82}$$

These expressions represent the solution for $b_{x1}^{(1)}(x, y)$ and $b_{y1}^{(1)}(x, y)$. When x is large (positive or negative), we have for the two integrals in (81) and (82) (see Appendix C):

$$\int_{-\infty}^{\infty}\left[\frac{1-y}{(1-y)^2 + (\xi-x)^2} + \frac{1+y}{(1+y)^2 + (\xi-x)^2}\right] F(\xi) d\xi = \frac{2}{x^2}\int_{-\infty}^{\infty} F(\xi) d\xi + O\left(\frac{1}{x^3}\right) \tag{83}$$

$$\int_{-\infty}^{\infty}\left[\frac{1}{(1-y)^2 + (\xi-x)^2} - \frac{1}{(1+y)^2 + (\xi-x)^2}\right](\xi-x)\, F(\xi) d\xi = \frac{4y}{x^3}\int_{-\infty}^{\infty} F(\xi) d\xi + O\left(\frac{1}{x^4}\right) \tag{84}$$

For large negative x the Fourier series in the solutions (81)–(82) decreases exponentially; therefore, it is concluded that the disturbances of the magnetic field are propagated upstream with an algebraical decay: x^{-2} for $b_{x1}^{(1)}(x, y)$ and x^{-3} for $b_{y1}^{(1)}(x, y)$. Far downstream, the induced field presents the same asymptotic behavior. The validity of these conclusions is subject to the restrictions discussed in the following section. Note that the power of x characterizing the decay does not depend on the applied magnetic field.

Now, if we consider the current $j_1^{(1)}$ which is exactly given by the equation

$$j_1^{(1)} = \frac{\partial b_{y1}^{(1)}}{\partial x} - \frac{\partial b_{x1}^{(1)}}{\partial y} = R_m\left[H(x)\, B_y^* - v_0^{(1)}\right]$$

it is seen that, for negative x, the current decays in exactly the same manner as $v_0^{(1)}$, namely the exponentially (in the calculation of the current the harmonic part of magnetic field gives no contribution).

V. VALIDITY OF THE SOLUTION

In the course of the analysis, we have introduced asymptotic expansions depending on the two small parameters ϵ and R_m. For the magnetic field

$$B_x = 1 + \epsilon H(x) B_x^* + \epsilon\left[R_m b_{x1}^{(1)} + R_m^2 b_{x2}^{(1)} + \cdots\right] + \epsilon^2\left[R_m b_{x1}^{(2)} + R_m^2 b_{x2}^{(2)} + \cdots\right] + \cdots$$

$$B_y = \epsilon H(x) B_y^* + \epsilon\left[R_m b_{y1}^{(1)} + R_m^2 b_{y2}^{(1)} + \cdots\right] + \epsilon^2\left[R_m b_{y1}^{(2)} + R_m^2 b_{y2}^{(2)} + \cdots\right] + \cdots$$

and for the transverse velocity, for example,

$$v = \epsilon\left[v_0^{(1)} + R_m v_1^{(1)} + R_m^2 v_2^{(1)} + \cdots\right] + \epsilon^2\left[v_0^{(2)} + R_m v_1^{(2)} + R_m^2 v_2^{(2)} + \cdots\right] + \cdots$$

and we have then calculated $v_0^{(1)}$, then $b_{x1}^{(1)}$ and $b_{y1}^{(1)}$.

The following difficulties need some explanation:

1. First of all, the terms in ϵ^2 have been neglected. It is relatively easy to see, from the corresponding equations, that the terms in ϵ^2 present no singularity and can be neglected in comparison with those in ϵ for any value of x.

2. In order to determine $v_0^{(1)}$, we have neglected $\epsilon R_m b_{x1}^{(1)}$ with respect to $1 + \epsilon H(x) B_x^*$ and $\epsilon R_m b_{y1}^{(1)}$ with respect to $\epsilon H(x) B_y^*$. At $x = 0$, the solutions for $b_{x1}^{(1)}$ and $b_{y1}^{(1)}$ have no singularity, but $b_{y1}^{(1)}$ is different from zero, while B_y^* can be zero. That means that, for a given R_m, there exists a neighborhood *of* $x = 0$ — depending on the value of R_m — within which $R_m b_{y1}^{(1)}$ is equal to and even greater than B_y^*. However, one can see that such terms as $v_0^{(1)}$, $\partial v_0^{(1)}/\partial x$, $\partial p_0/\partial y$, $\cdots$, which are nonzero at $x = 0$, remain in the equation. Consequently, although the term $R_m b_{y1}^{(1)}$ becomes of the same order as B_y^*, it can be neglected with respect to the other terms of the equation.

3. In the analysis, only the component $(B_{\text{appl}})_y = \epsilon H(x) B_y^*$ played a role; however, it is convenient to consider the behavior of the component $(B_{\text{appl}})_x = 1 + \epsilon H(x) B_x^*$.

If the total applied magnetic field (sum of the uniform part and the nonuniform part) is created by a finite solenoid, the two components must tend toward zero at infinity, particularly

$$1 + \epsilon B_x^* \to 0 \qquad \text{when } x \to +\infty$$

Consequently, the nonuniform part, which has been assumed small with respect to the uniform part, becomes of the same order of magnitude, although within the channel the slope of the tangent to magnetic lines tends toward zero. Therefore, under these conditions, the solution is not valid at positive infinity.

However, as has been pointed out, the applied magnetic field can be considered as the superposition of a uniform field (1, 0) and a nonuniform field $(\epsilon H(x) B_x^*, \epsilon H(x) B_y^*)$ which can also have the following character: As x tends toward infinity, B_x^* and B_y^* tend toward zero and the component $1 + \epsilon B_x^*$ tends toward 1. The corresponding magnetic configuration is shown in Fig. 4 for the case

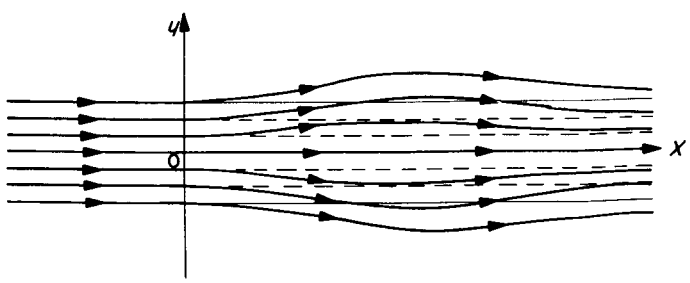

Fig. 4. Magnetic field configuration for the case when $B_y^*(0, y) = 0$

where $B_y^*(0, y) = 0$. At a finite distance along axis $0x$, the magnetic lines are identical to those of Fig. 2; but, for infinite x, they become asymptotes of the extensions of the parallel magnetic lines of region $x < 0$. With that behavior for the applied magnetic field, the difficulty previously mentioned is not present.

4. The quantity $R_m b_{y1}^{(1)}$ has been neglected with respect to $\epsilon H(x) B_y^*$ in order to calculate $v_0^{(1)}$. That is justified at a finite distance; but when $x \to +\infty$, then $b_{y1}^{(1)} \sim x^{-3}$, while $B_y^* \sim x^{-4}$ in the case of a finite solenoid. Therefore, at a certain distance, of the order of R_m^{-1}, the term $R_m b_{y1}^{(1)}$ becomes of the same order of magnitude as B_y^*. Therefore, the solution is not valid for $x \to +\infty$ with any given fixed R_m. However, the formal solution will be valid in a neighborhood of any point x_0 if R_m is chosen so that

$$R_m \ll \frac{B_y^*(x_0, y)}{b_{y1}^{(1)}(x_0, y)} \tag{86}$$

5. Finally, one must study the validity of the formal solution obtained for the velocity (or the pressure). The higher approximation for the transverse velocity, say $v_1^{(1)}$, must satisfy the equation

$$\frac{\partial^2 v_1^{(1)}}{\partial x^2} + \frac{\partial^2 v_1^{(1)}}{\partial y^2} + N \frac{\partial v_1^{(1)}}{\partial x} = N \frac{\partial b_{y1}^{(1)}}{\partial x} \tag{87}$$

which is identical to the equation satisfied by $v_0^{(1)}$ except that $b_{y1}^{(1)}$ replaces $H(x)B_y^*$. Therefore, because $b_{y1}^{(1)}$ behaves like x^{-3} at positive and negative infinity, we can deduce — it is even possible to calculate $v_1^{(1)}$ exactly — that for $x \to -\infty$, $v_1^{(1)} \sim x^{-4}$, while $v_0^{(1)} \sim e^{\lambda_1^{(+)} x}$ and that for $x \to +\infty$, $v_1^{(1)} \sim x^{-4}$, while $v_0^{(1)} \sim x^{-5}$. There again the neglected term $v_1^{(1)}$ becomes of the same order of magnitude as $v_0^{(1)}$ and the solution is not uniformly valid. However, this formal solution will be valid in a neighborhood of any point x_0 if R_m, which must already verify the condition (86), is chosen so that

$$R_m \ll \frac{v_0^{(1)}(x_0, y)}{v_1^{(1)}(x_0, y)} \tag{88}$$

VI. CONCLUSION

With the hypothesis that $R_m \ll 1$, $A^2 \ll 1$, and taking account of the discussions of the previous section, it has been found that the nonuniformity of the applied magnetic field in the half-plane $x \geqslant 0$ creates disturbances in the flow as well as in the magnetic field. These disturbances are propagated upstream; they decay exponentially for the flow quantities, and algebraically for the magnetic field. We must emphasize that, with the hypothesis $R_m \ll 1$, the order of the magnetic field perturbation is higher than that of the flow perturbation. However, we note that both vorticity and current, although of different orders of magnitude, decay in identical manner.

APPENDIX A

Asymptotic Behavior of Integrals for Large Positive x

Let the integral

$$I_n(x) = e^{\lambda_n^{(+)} x} \int_x^\infty e^{-\lambda_n^{(+)} \xi} B_n(\xi)\, d\xi \qquad \text{(A-1)}$$

For large x, $B_n(x)$ can be replaced by its asymptotic behavior, for a finite solenoid $S_n\, x^{-4}$, where S_n is a constant which depends on n. Then the integral in (A-1) is calculated by integrating by parts, and one finds

$$I_n(x) \sim S_n\, e^{\lambda_n^{(+)} x} \int_x^\infty \frac{e^{-\lambda_n^{(+)} \xi}}{\xi^4}\, d\xi = S_n \left[\frac{1}{\lambda_n^{(+)} x^4} - \frac{4}{\lambda_n^{(+)2} x^5} + O\left(\frac{1}{x^6}\right) \right] \qquad \text{(A-2)}$$

Following an analogous method, we find

$$J_n(x) = e^{\lambda_n^{(-)} x} \int_0^x e^{-\lambda_n^{(-)} \xi} B_n(\xi)\, d\xi = -\, S_n \left[\frac{1}{\lambda_n^{(-)} x^4} - \frac{4}{\lambda_n^{(-)2} x^5} + O\left(\frac{1}{x^6}\right) \right] \qquad \text{(A-3)}$$

APPENDIX B

Convergence of Fourier Series

It is sufficient to show only the convergence of the series giving $v_0^{(1)}(x, y)$:

$$\sum_{n=1}^{\infty} \sigma_n(x) \sin n\pi y \qquad \text{(B-1)}$$

The demonstration for other Fourier series occurring in the analysis will be the same.

Let us consider the series

$$\sum_{n=1}^{\infty} |\, v_n(x) \,| \qquad \text{(B-2)}$$

For negative x, the general term of this latter series is

$$|\, v_n(x) \,| = \left| \frac{\lambda_n^{(+)} N}{\lambda_n^{(+)} - \lambda_n^{(-)}} \left[\int_0^\infty e^{-\lambda_n^{(+)} \xi} B_n(\xi)\, d\xi \right] e^{\lambda_n^{(+)} \xi} \right| \qquad \text{(B-3)}$$

The B_n are the Fourier coefficients of the function $B_y^*(x,y)$ which is bounded in the region $-\infty \leqslant x \leqslant \infty, |y| \leqslant 1$; hence, there exists a positive, bounded function $G(x)$ such that

$$|\, B_n(x) \,| < \frac{G(x)}{n} \leqslant \frac{M}{n} \qquad \text{(B-4)}$$

where M is an upper bound of $G(x)$. Now, we can find a constant K and a rank m for which

$$|\, v_n(x) \,| < K \frac{e^{n\pi x}}{n} \int_0^\infty e^{-n\pi\xi}\, d\xi = \frac{K}{\pi} \frac{e^{n\pi x}}{n^2} \qquad \text{(B-5)}$$

The series of the general term $e^{n\pi x}/n^2$ is absolutely and uniformly convergent for all $x \leqslant 0$. This result leads to an analogous conclusion for Series (B-2), and we can conclude that the series (B-1) is absolutely and uniformly convergent for every $x \leqslant 0$ and every $|\, y \,| \leqslant 1$.

For positive x, the expression for the general term of (B-1) is slightly more complicated, but it is possible to obtain the same conclusion of convergence.

APPENDIX C

Asymptotic Behavior of Integrals (83) and (84) for Large x

For integral (82) we can write the following identity:

$$\int_{-\infty}^{\infty} \frac{F(\xi)}{a^2 + (\xi - x)^2}\, d\xi = \frac{1}{x^2}\int_{-\infty}^{\infty} F(\xi)\, d\xi + \frac{1}{x^3}\int_{-\infty}^{\infty} F(\xi)\, g(\xi, x)\, d\xi \qquad \text{(C-1)}$$

where

$$a = 1 \pm y$$

$$g(\xi, x) = \frac{2\xi x^2 - (\xi^2 + a^2)\, x}{x^2 - 2\xi x + (\xi^2 + a^2)} \qquad \text{(C-2)}$$

and we want to show that the second integral (C-1) is finite for infinite x.

From Eq. (73) we have

$$\int_{-\infty}^{\infty} F(\xi)\, g(\xi, x)\, d\xi = \int_{-\infty}^{0} F^{(-)}(\xi)\, g(\xi, x)\, d\xi + \int_{0}^{\infty} F^{(+)}(\xi)\, g(\xi, x)\, d\xi \qquad \text{(C-3)}$$

Now, it is sufficient to show only that the second integral on the right-hand side of (C-3), for example, is finite. An analogous argument will be valid for the first integral.

When $x \to \pm\infty$, $F^{(+)}(\xi)\, g(\xi, x)$ tends uniformly toward $2\xi F^{(+)}(\xi)$ for any finite ξ. For large ξ, we know that $F^{(+)}(\xi) \sim \xi^{-4}$. Therefore, there exists a ξ_0 such that

$$\int_{0}^{\infty} F^{(+)}(\xi)\, g(\xi, x)\, d\xi = \int_{0}^{\xi_0} F^{(+)}(\xi)\, g(\xi, x)\, d\xi + P\int_{\xi_0}^{\infty} \frac{g(\xi, x)}{\xi^4}$$

where P is a suitable constant. Now, the limit for $x \to \pm\infty$ of the first integral in the right-hand side of (C-4) is the integral of the limit, and we can show the uniform convergence of the second integral for any x which leads to the conclusion expressed in Eq. (83).

An analogous argument permits us to find the asymptotic behavior of integral (84).

NOMENCLATURE

A Alfvén number $V_0 (\mu \rho_0)^{1/2}/B_0$

b_n Fourier coefficient of $(b_{x1}^{(1)})_p$

b_x, b_y Components of induced magnetic induction

$(b_{x1}^{(1)})_p, (b_{y1}^{(1)})_p$ Particular solutions of Eqs. (62) and (63)

B_n Fourier coefficient of B_y^*

B_x, B_y Components of magnetic induction $\mathbf{B}$

B_x^*, B_y^* Components of nonuniform applied magnetic induction

$\widetilde{B}_0$ Intensity of uniform applied magnetic induction

$\mathbf{B}$ Magnetic induction

$\mathbf{B}_{\text{appl}}$ Applied magnetic induction

(D) Downstream region

F Value of $(b_{x1}^{(1)})_p$ at $y = 1$

$F^{(\pm)}$ Defined from F by Eq. (75)

h Half-height of duct

H Heaviside function

j Current density

(L) Midline of solenoid

n Subscript in $(u_n, v_n, p_n, b_n, \beta_n)$ refers to Fourier coefficient in general term of Fourier series

N Interaction parameter R_m/A^2

p Pressure

R_m Magnetic Reynolds number $\mu\sigma\widetilde{V}_0 h$

(T) Test section

u Component of $\mathbf{V}$ in x direction

v Component of $\mathbf{V}$ in y direction

$\mathbf{V}$ Flow velocity

x Coordinate along axis of duct

$\mathbf{x}$ Unit vector of $0x$ axis

y Coordinate normal to axis of duct

$\mathbf{y}$ Unit vector of $0y$ axis

β_n Fourier coefficient of $(b_{y1}^{(1)})_p$

ϵ Dimensionless parameter characteristic of magnitude of nonuniform applied field

$\lambda_n^{(\pm)}$ Roots of characteristic equation of Eq. (40)

(Λ) Line separating regions (T) and (D)

μ Magnetic permeability of fluid

ρ Density

σ Electrical conductivity of fluid

ω Vorticity

0 Subscript in $(\widetilde{V}_0, \widetilde{p}_0, \widetilde{\rho}_0)$ refers to uniform unperturbed flow

(1) Superscript in $(u^{(1)}, v^{(1)}, p^{(1)}, b_x^{(1)}, b_y^{(1)})$ refers to perturbation quantities

0 and 1 Subscripts combined with superscript (1) refer to quantities of zero and first order in R_m

$\sim$ Superscript refers to dimensional quantities; corresponding symbol without $\sim$ refers to dimensionless quantities

REFERENCES

1. Maxworthy, T., "Liquid Sodium Flow Facility for Magneto-Fluid-Dynamic Research," *Review of Scientific Instruments,* Vol. 32, No. 11, 1961, pp. 1260–1261.

2. Maxworthy, T., "High Magnetic Reynolds-Number Pipe Flow Through a Solenoid of Finite Length," Abstract in *Bulletin of American Physical Society,* Series 11, Vol. 10. No. 2, 1965, p. 271.

3. Lary, E. C., "A Theory of Thin Airfoils and Slender Bodies in Fluids of Finite Electrical Conductivity with Aligned Fields," *Journal of Fluid Mechanics,* Vol. 12, 1962, pp. 209–226.

4. Ahlstrom, H. G., "Experiments on the Upstream Wake in Magneto-Fluid Dynamics," *Journal of Fluid Mechanics,* Vol. 15, 1963, pp. 205–222.

ACKNOWLEDGMENTS

The author would like to thank Dr. T. Maxworthy for suggesting the problem and for his help. Thanks are also due to Dr. W. S. Childress for helpful discussions.