NASA CR-54976
LAC ER-8538

EFFECT OF NUCLEAR RADIATION ON MATERIALS AT CRYOGENIC TEMPERATURES

by

LOCKHEED NUCLEAR PRODUCTS

C. A. Schwanbeck, Project Manager

prepared for

NATIONAL AERONAUTICS AND SPACE ADMINISTRATION

Contract NAS3-7985

N66 28041 (ACCESSION NUMBER)
(THRU)
94 (PAGES)
1 (CODE)
CR-54976 (NASA CR OR TMX OR AD NUMBER)
22 (CATEGORY)
FACILITY FORM 602

GPO PRICE $ _____

CFSTI PRICE(S) $ _____

Hard copy (HC) 3.00

Microfiche (MF) .75

ff 653 July 65

LOCKHEED NUCLEAR PRODUCTS

NOTICE

This report was prepared as an account of Government sponsored work. Neither the United States, nor the National Aeronautics and Space Administration (NASA), nor any person acting on behalf of NASA:

A.) Makes any warranty or representation, expressed or implied, with respect to the accuracy, completeness, or usefulness of the information contained in this report, or that the use of any information, apparatus, method, or process disclosed in this report may not infringe privately owned rights; or

B.) Assumes any liabilities with respect to the use of, or for damages resulting from the use of any information, apparatus, method or process disclosed in this report.

As used above, "person acting on behalf of NASA" includes any employee or contractor of NASA, or employee of such contractor, to the extent that such employee or contractor of NASA, or employee of such contractor prepares, disseminates, or provides access to, any information pursuant to his employment or contract with NASA, or his employment with such contractor.

Requests for copies of this report should be referred to

National Aeronautics and Space Administration
Office of Scientific and Technical Information
Attention: AFSS-A
Washington, D.C. 20546

NASA CR-54976
LAC ER-8538

QUARTERLY REPORT NO. 3

January 21, 1966 Through April 21, 1966

EFFECT OF NUCLEAR RADIATION ON MATERIALS AT CRYOGENIC TEMPERATURES

by

LOCKHEED NUCLEAR PRODUCTS

C. A. Schwanbeck, Project Manager

prepared for

NATIONAL AERONAUTICS AND SPACE ADMINISTRATION

May 1966

Contract NAS 3-7985

Technical Management
NASA Lewis Research Center
Cleveland, Ohio
Nuclear Systems Division
Charles L. Younger

LOCKHEED NUCLEAR PRODUCTS
LOCKHEED-GEORGIA COMPANY

A DIVISION OF LOCKHEED AIRCRAFT CORPORATION

If this document is supplied under the requirements of a United States Government contract, the following legend shall apply unless the letter U appears in the coding box:

This data is furnished under a United States Government contract and only those portions hereof which are marked (for example, by circling, underscoring or otherwise) and indicated as being subject to this legend shall not be released outside the Government (except to foreign governments, subject to these same limitations), nor be disclosed, used, or duplicated, for procurement or manufacturing purposes, except as otherwise authorized by contract, without the permission of Lockheed-Georgia Company, A Division of Lockheed Aircraft Corporation, Marietta, Georgia. This legend shall be marked on any reproduction hereon in whole or in part.

The "otherwise marking" and "indicated portions" as used above shall mean this statement and includes all details or manufacture contained herein respectively.

Code: U | Contract: NAS 3-7985

FOREWORD

This quarterly report is submitted to the National Aeronautics and Space Administration, Lewis Research Center, by the Lockheed-Georgia Company in accordance with the requirements of NASA Contract NAS 3-7985.

TABLE OF CONTENTS

Section		Page
Foreword		iii
Table of Contents		v
1	SUMMARY	1
2	INTRODUCTION	3
3	TEST EQUIPMENT	5
3.1	Identification	5
3.2	Test Loops	5
3.3	Refrigeration System	8
3.4	Load Control System	9
3.5	Transfer System	10
3.6	Specimen Change Equipment	11
3.7	Miscellaneous Test Equipment	11
3.8	Test Equipment Maintenance And Calibration	11
3.9	Experiment Design Manual And Hazards Analysis	18
4	TEST PROCEDURES	21
4.1	Test Specimen Design And Fabrication	21
4.2	Flux Mapping	22
4.3	Tensile Test Methods	22
4.4	Fatigue Test Methods	25
4.5	Structural Studies	26
5	TEST PROGRAM	27
5.1	Tensile Testing	28
5.2	Low-Cycle Fatigue Testing	35
6	REFERENCES	37
7	TABLES	39
	1 Flux Mapping Foils	41
	2 In-Pile Temperature Correlation Data	42
	3 Out-Of-Pile Temperature Correlation Data	43
	4 Tensile Test Program (Scope)	44
	5 Fatigue Test Program (Scope)	45
	6 Material Composition (Pedigree Data)	46
	7 Material Physical Characteristics (Pedigree Data)	47
	8 Test Results, Effects of Test Temperature, Aluminum 1099-H14 (No Irradiation)	48

TABLE OF CONTENTS (Cont'd)

Section			Page
7	TABLES (Cont'd)		
	9	Partial Test Results, Effects of Irradiation, Aluminum 1099-H14 (Tested At 30°R)	50
	10	Partial Test Results, Effects of Irradiation Temperature, Aluminum 1099-H14 (1×10^{17}nvt, E >0.5 Mev, Tested at Irradiation Temperature)	51
	11	Partial Test Results, Effects of Annealing And Test Temperature, Aluminum 1099-H14 (1×10^{17} nvt, E >0.5 Mev, At 30°R, Annealed and Tested At Indicated Temperature)	52
	12	Partial Test Results, Effects of Annealing, Aluminum 1099-H14 (1×10^{17} nvt, E > 0.5 Mev, At 30°R, Annealed At Indicated Temperature, Tested At 30°R)	53
	13	Test Results, Titanium 55A-Annealed	54
	14	Partial Test Results, Titanium-5Al-2.5 Sn (ELI)-Annealed	55
	15	Test Results, Aluminum 7178-T651	56
	16	Test Results, Titanium 55A - Annealed	57
8	FIGURES		59
	1	System Layout	60
	2	Test Equipment (Block Diagram)	61
	3	Tensile Test Loop Assembly	62
	4	Specimen Holder Design	63
	5	Fatigue Load Control System (Block Diagram)	64
	6	Load Control System (Schematic)	65
	7	Test Loop Actuation Center	66
	8	Test Facility Equipment Maintenance Schedule	67
	9	Expansion Engine Maintenance Schedule	68
	10	Transfer System Cycle Operation Form	69
	11	Maintenance History - Test Loops 201-002, 201-003, 201-004 And 201-005	70
	12	Maintenance History - Expansion Engines No. 1 And No. 2	71
	13	Maintenance History - Expansion Engines No. 3 And No. 4	72
	14	Maintenance History - Expansion Engines No. 5 And No. 6	73

TABLE OF CONTENTS (Cont'd)

Section			Page
8	FIGURES (Cont'd)		
	15	Maintenance History - Test Loop Carriages	74
	16	Maintenance History - Transfer Tables - Beam Port And Hot Cave Access Equipment	75
	17	Tensile Specimen	76
	18	Fatigue Specimen	77
	19	Neutron Flux $>E_T$ Vs. E_T And Neutron Flux >0.5 Mev Vs. Control Rod Bank Position	78
	20	Electron Fractograph Of Failed Fatigue Specimen 18 Ni 300 Maraging Steel, 26.5 Cycles At 5 Cpm, 270 Ksi	79
	21	Temperature Dependence Of Tensile Properties Aluminum 1099-H14, Unirradiated	80
	22	Typical Load-Elongation Curves, At Various Temperatures, For Aluminum 1099-H14, Unirradiated	81
	23	Effects Of Irradiation At 30°R On Titanium 55A	82
	24	Typical Load-Elongation Curves For Titanium 55A	83
Appendix A - Distribution			85

1 SUMMARY

This is the third quarterly report summarizing the work to date on Contract NAS 3-7985 entitled, "The Effect of Nuclear Radiation on Material at Cryogenic Temperatures." The studies under this contract include the effects of (1) 10^{18} nvt (E > 0.5 Mev) at 30°R on tensile properties of titanium base alloys; (2) irradiation temperature (30°R to 540°R) on tensile properties of Aluminum 1099-H14 following irradiations up to 3×10^{17} nvt; (3) annealing following irradiation at 30°R to 10^{17} nvt on tensile properties of Aluminum 1099; (4) irradiation at 30°R on axial, low-cycle fatigue properties of titanium base alloys; and (5) temperature (140°R and 540°R) on tensile properties of Titanium 55A and Aluminum 7178.

The tensile testing phase of the contract is being performed with government owned test equipment which was available at the beginning of the contract. The in-pile and out-of-pile tensile test results from Titanium 55A are complete. The out-of-pile tensile test results from Aluminum 1099 and Aluminum 7178 are complete. The in-pile tensile test results from Aluminum 1099, including some results of annealing after irradiation, and test results from Titanium-5Al-2.5 Sn (ELI) are partly complete. A previously reported temperature dependence of the F_{ty}/F_{tu} ratio (LNP: Effects of Nuclear Radiation on Materials at Cryogenic Temperatures, NASA CR-54881, January 1965) in Aluminum 1099-H14, attributable to changes in intergrannular critical shear stress, was confirmed. Increases in the tensile and yield strengths of Titanium 55A were observed up to integrated fluxes of 10^{18} nvt. Test data on other materials is not sufficiently complete to warrant further conclusions at this time.

The refrigeration system and other test equipment have continued to perform satisfactorily, resulting in unusually efficient use of available neutron flux.

The low-cycle fatigue testing phase of the contract has required extensive modification of the hydraulic load control system and some changes to the test loops. Required new components have been fabricated or purchased and have been installed. The electronics portion of the system has been operated in a preliminary manner under cyclic operation and methods of calibrating are being developed.

2 INTRODUCTION

The combination of a fast neutron and cryogenic environment encountered in the structural members of a liquid hydrogen nuclear rocket imposes service conditions dissimilar to those encountered in other engineering applications. Both fast neutron bombardment and extremely low temperatures affect the mechanical properties of engineering materials; therefore the magnitude of the combined effect must be determined to provide basic design information before materials for a reliable nuclear rocket system can be selected. Since the neutron irradiation effects will spontaneously anneal even at low temperatures, tests to provide the desired information concerning the combined effect must be conducted with the specimens held at the temperature of interest during the entire irradiation and testing period.

A screening program (ref. 1) was undertaken to assess the effect of fast neutron irradiation on selected engineering alloys at temperatures near the boiling point of liquid hydrogen (-423°F). Tensile tests on parallel sample sets of unnotched specimens for each alloy at room temperature unirradiated, at 30°R (-430°F) unirradiated and at 30°R irradiated to 1×10^{17} nvt (energies greater than 0.5 Mev), were performed at the NASA Plum Brook Reactor Facility using a helium refrigerator and testing equipment specially designed for in-pile testing under controlled temperature conditions.

Test results from the screening program indicated that titanium alloys possessed the highest strength-to-weight ratio following exposure to the combined nuclear-cryogenic environment as well as being among the least susceptible to deterioration of mechanical properties of the alloys tested. On the other hand, Aluminum 1099 (99.99% Aluminum) was found to be very sensitive to both irradiation and temperature of irradiation.

Based on the information obtained from the screening program, an in-pile test program (see section 5) has been initiated to study in greater detail the effects of a combined nuclear-cryogenic environment on the mechanical properties of metals. The objective of this program is to provide engineering data at higher integrated fluxes and/or under different load conditions than heretofore attained at cryogenic temperatures as well as data for more fundamental studies. Its scope consists of two general phases, tensile testing and low-cycle fatigue testing. The tensile testing phase includes irradiations at 30°R to 10^{18} nvt ($E > 0.5$ Mev), irradiations to 10^{17} nvt ($E > 0.5$ Mev) at temperatures between 30°R and room temperature (540°R), and irradiations to 10^{17} nvt ($E > 0.5$ Mev) at 30°R followed by specimen warm-up prior to

fracture. The low-cycle fatigue testing phase includes both fatigue testing during irradiation at 30°R and fatigue testing following irradiation at 30°R to 10^{17} nvt ($E > 0.5$ Mev). The tensile testing phase of the test program is preceding most of the fatigue testing phase due to extensive modification of the hydraulic load control system and necessary test loops for cyclic loading.

Standard test specimens cannot be used in this test program due to various restrictions on the test equipment imposed by the nuclear cryogenic environment. The tensile specimens being used represent a miniaturization of the standard ASTM E-8 specimen (ref. 3). The miniature fatigue specimens required in this program will represent a departure from any commonly used design, but are similar in geometry to those used by other investigators (ref. 4).

Progress during the earlier reporting periods (ref. 5 and ref. 6) consisted of necessary preparations, neutron flux mapping, temperature correlations, some modifications of existing equipment, and some in-pile test results. During performance of in-pile tests, polyurethane seals used in the test loops to isolate the static helium refrigerant (under pressure in the head assembly) from the cooling water performed satisfactorily after test specimen exposures to 1×10^{18} nvt ($E > 0.5$ Mev). These seals had been subjected to gamma doses of 2.5×10^{9} r.

During this reporting period, work continued on test equipment modification and maintenance (section 3), on test procedure development (section 4), and on the test program (section 5).

3 TEST EQUIPMENT

Test equipment available at the beginning of this contract is being utilized during performance of the test program. Most of this equipment had undergone major overhaul and modification (ref. 2) in preparation for the nominal 140 hour irradiation period to obtain 10^{18} nvt exposures. Maintenance and calibration schedules, established during this overhaul effort, have kept the equipment operating reliably.

The various systems and components of the test equipment are discussed in the following sections. Test equipment maintenance and hazards analyses are discussed separately in sections 3.8 and 3.9, respectively.

3.1 IDENTIFICATION

The test equipment (figure 1) for in-pile and out-of-pile testing under controlled temperature and load conditions permits the test program to be performed wholly by remote operations. This equipment and its operation, have been described previously (ref. 5 and ref. 6). For purposes of discussing information pertinent to the design, modification, and performance characteristics, the equipment is separated into the six categories shown schematically in figure 2.

3.2 TEST LOOPS

The test loops are stainless steel cylindrical envelopes, six inches OD by about nine feet long, containing all necessary equipment for irradiating a test specimen under controlled temperature conditions and fracturing the specimen, at temperature, in tension or compression without removal from the irradiation field. At the aft end of the test loops, fittings are provided to connect the refrigeration system, the load control system, and the instrumentation and data recording system. Other fittings are provided for test loop cooling using deionized water (which must be isolated from the helium refrigerant).

To perform the test program, five tension-compression test loops are currently being used as follows:

Test loops 201-001 (the prototype loop) and 201-005--design studies to determine modification requirements for low-cycle fatigue testing. (See section 3.2.2)

Test loop 201-002--in hot laboratory area where investigation of various methods of repairing the inner helium line are currently being evaluated. (See section 3.8.2.1)

Test loops 201-003 and 201-004--used during reporting period for performing tensile test program. (See section 3.2.1)

3.2.1 Tensile Test Loops

During this reporting period, test loop 201-003 and 201-004 were used for a total of eleven cycles* in performing material evaluation. Test loop 201-003 (with head assembly 201-011) was used for five cycles of operation and test loop 201-004 (with head assembly 201-006) was used for six cycles of operation.

Both test loops performed satisfactorily; however, an indication of leakage was observed in the specimen loading actuator of test loop 201-004 when conducting tests in reactor cycle 44P. The leakage was not of sufficient volume to compromise testing accuracy; therefore, repairs were deferred until reactor cycle 45S, a scheduled long down cycle (see section 3.8.2.1.2).

3.2.2 Fatigue Test Loops

Low-cycle axial tension-compression fatigue tests are to be performed using existing tension-compression test loops. The original specifications to which the test loops were constructed required that they be capable of exerting tensile or compressive loads, but not both in a cyclic manner. Considerable analysis and some modification is required before reliable tensile-compressive fatigue data can be obtained and the existing self-aligning features must be replaced by a more complex arrangement. Tensile test loop 201-005 and the prototype tensile test loop (201-001) without the self-aligning features are being used to experimentally determine the extent of modification required.

---

* For cycle definition, see section 3.8.1.

3.2.2.1 Design

The major components of the test loop under consideration are shown in figure 3.

The structural member installed in the test loop, as shown in figure 3, is the assembly which supports the specimen loading actuator and also acts as a column directing the loads, which occur during loop insertion into the reactor beam port, into the carriage trunnion. The load applied in the test specimen is transmitted through the head assembly back through this member to the actuator. The load resulting from testing is distributed peripherally and transmitted eccentrically into the member. Deflection studies (ref. 5 and ref. 6) show that modification of the structural member of test loop 201-005 is not required.

The lost motion in the pull rod linkage of test loop 201-005 is assumed to be not significantly greater than the 0.02 inch measured in the prototype loop at 3500 pounds load (ref. 5). This assumption is based on the fact that the linkages are mechanically identical and has been confirmed by loading responses on going from tension to compression, similar to those with the prototype loop.

The hydraulic actuator seals are being qualified for cyclic operation to 10,000 cycles. During a previous reporting period, (ref. 5), over 1400 cycles at high loads with new seals, were obtained with test loop 201-001 without indication of failure. No significant additional testing of the seals in either test loop 201-001 or test loop 201-005 has been performed since that reporting period.

The design of specimen holders for fatigue testing was completed during the previous reporting period (ref. 6). This design, shown in figure 4, is based on the performance of prototype holders and jam nuts with matching conical faces for maximum specimen alignment and minimum slack due to variations in thread dimensions. The system was designed using the smallest number of parts possible to minimize lost motion. This design also meets heat transfer requirements in that heat flow through the specimen is minimized. Two sets of these holders were ordered and received during this reporting period.

The test loop head assembly organic seals for fatigue testing will be the same as those used for tensile testing. These seals will be subjected to more severe dynamic load conditions and some difficulties are anticipated, particularly with irradiation. No difficulties have been experienced so far during the preliminary cyclic loading (discussed in reference 5); to date there has been no cyclic loading at low temperatures or in-pile.

3.2.2.2 Modification

After completion of the detail design and experimental evaluation of the fatigue loop concepts incorporated in test loop 201-005, a similar modification will be performed on one of the radioactive tensile test loops. Appropriate methods and procedures for so doing will be developed during modification of tensile test loop 201-005.

3.3 REFRIGERATION SYSTEM

The test specimen temperature is maintained at temperatures between 30° - 540° Rankine using a gaseous phase helium refrigerator system. This system (ref. 5) contains an electrically driven positive displacement compressor, counterflow heat exchanger and four reciprocating expansion engines. The system was specifically designed and fabricated for this application to provide a minimum of 1150 watts of refrigeration for maintaining any specified specimen temperature from 30°R to 540°R by varying engine speed, expansion engine pressure ratio, and the heat input from manually controlled electrical resistance heaters installed in the refrigerant distribution manifold.

During this reporting period, the system was operated for 743.0 hours and performed satisfactorily in conducting all scheduled in-pile and out-of-pile testing. Maintenance was performed according to established schedules (see section 3.8.1.2).

Some difficulty has been encountered in operating the system to provide the limited refrigeration required to dissipate gamma heat at or near room temperature, i.e., 540°R (ref. 6). The engines, operating at low speed, stalled when helium contaminants collected and froze in the cylinders.

The problem may be defined as follows: Operation of the system with the high pressure side of the heat exchanger at or near room temperature and the significant reduction of the temperature through the engines will cause deposition of any contaminants, such as water, in the engines. The elimination of all the moisture in the helium supply is difficult since as any helium make-up in the expansion tank adds cumulatively to the total moisture in the system. Also, the small quantities of moisture introduced when specimen change-over is performed will add to that already in the system. During low temperature operation this moisture will freeze out on the high pressure

side heat exchanger surface and remain there to be removed by blow down when the refrigerator is warmed up.

Various methods of excluding the migration and freeze-out of helium contaminants in the system are currently being explored. Investigation has indicated that helium routed through an externally mounted counter-current heat exchanger submerged in liquid nitrogen will provide the required refrigeration capacity to perform these tests.

A specification for such a unit has been published and distributed to numerous cryogenic equipment manufacturers. The equipment as defined shall be capable of eliminating stream borne contaminants through appropriate traps, filters and molecular sieves and provide an effluent helium gas stream at a temperature that is compatible with the refrigeration requirement.

To date, a number of the manufacturers have indicated that their current work load would not permit undertaking the fabrication of the equipment; however, the adaptation of presently manufactured equipment has been proposed and evaluation of this proposal is currently underway. As proposed, the unit will include heat exchanger, liquid nitrogen reservoir, and appropriate traps and filters. Interconnection of this equipment into the test loop system appears feasible and detailed requirements are being established.

3.4 LOAD CONTROL SYSTEM

The existing specimen loading system for tensile testing utilizes a positive displacement pump with demineralized water as the working fluid to provide the pressure required by the hydraulic actuator positioned in the test loop. Strain rate can be controlled through a variable speed drive connected to the pump.

The load transducer is located in the test loop and the extensometer is positioned directly on the specimen to measure only the strain which occurs between the gage marks. The pump and recording instrumentation are located in appropriate cabinets positioned on the grating above the quadrant at the 0'-0" level.

To perform the low-cyclic fatigue studies this system is being modified (refs. 5 and 6) to provide a closed loop servo system as shown in figures 5 and 6. The modified system includes an oil operated actuator mechanically coupled to a demineralized

water operated actuator as shown in figure 7. The latter provides the required flow and pressure to the actuator installed in the test loop.

Installation, check-out and calibration of the system was initiated during this reporting period.

Hydraulic system check-out included flushing of the system and testing of the installed hydraulic lines, under a pressure of 1.5 times actual operating pressures, with NASA observors in attendance. The oil side lines were tested at 4500 psig and the water side lines were tested at 1800 psig. The oil system was operated for several hours, pumping oil through the flushing block, before changing the line filters and switching the servo valve into the system.

The electronics portion of the system has been checked out under cyclic operation using a simulated load in place of the dynamometer LVDT signal, and an accurate method of calibrating the servo controller with respect to the command signal and output to the recorders has been determined. One of the older type dynamometers has been calibrated, using a galvanometer type voltmeter ,for use in preliminary testing. A digital type voltmeter was purchased for the more refined calibrations to be conducted during the next reporting period.

3.5 TRANSFER SYSTEM

To permit insertion and withdrawal of the test loops into the reactor, during reactor operation, a transfer system was designed and installed in quadrant D of the Plum Brook Reactor Facility. In addition, provision to change test specimens was incorporated by the installation of a hot cave with an access port in line with the assigned reactor beam port HB-2, as shown in figure 1.

To position the test loop for insertion or withdrawal from either the beam port or hot cave the supporting tables, which are submerged approximately twenty feet in quadrant water, are aligned remotely using hydraulic pressure provided from an axial piston pump using demineralized water as a working fluid. After positioning, the loop carriage is coupled to the access port and the loop is inserted or withdrawn by a worm-drive screw arrangement driven by a hydraulic motor.

During this reporting period, the transfer system was used for a total of eleven cycles* of test loop insertion and removal. The system performed satisfactorily during this operational period.

*For cycle definition, see section 3.8.1.

3.6 SPECIMEN CHANGE EQUIPMENT

Due to the high activity level of the test loops after several in-pile exposures, remote handling techniques are required for changing specimens. A hot cave provides adequate shielding for this operation. This cave is provided with manipulators, support fixtures and special tools to permit change-over of the specimen. In addition, minor repairs on the forward end of the test loop have been performed in this hot cave.

During this reporting period, the specimen change equipment was used for installation and removal of eleven test specimens. No specimen change equipment difficulties were encountered.

3.7 MISCELLANEOUS TEST EQUIPMENT

During this reporting period, the test loop transfer cask and associated equipment were used to move two test loops to the hot laboratory area in accordance with approved procedures. These loops, 201-003 and 201-004, were transferred to permit rebuilding the load actuators, as described in section 3.8. After completing repairs, the loops were returned to the containment vessel and positioned in quadrant D for use in the test program.

3.8 TEST EQUIPMENT MAINTENANCE AND CALIBRATION

During this reporting period, the maintenance and calibration program previously developed by a reliability analysis was used to provide a scheduled equipment maintenance program. Forms for recording the operational history of the equipment were used together with maintenance logs to record the use and maintenance performed during test operations.

The proposed maintenance schedules were adhered to, inasmuch as possible, to perform routine inspection and repair. The repairs associated with any component or system malfunction were performed, time permitting, and the cause and nature of repair recorded in the maintenance log. Other repair activities which could not be completed during this reporting period are continuing as studies to provide definitive methods or techniques to effect repair, and will require substantial effort to complete.

3.8.1 Maintenance and Calibration Schedule

The projected maintenance schedules for the test equipment and refrigerator system are shown in figures 8 and 9. The schedules define the major sub-systems associated with the test equipment and the components contained therein that require periodic scheduled inspection, adjustment, repair and overhaul. To provide a common criterion for maintaining records of the use and performance of scheduled maintenance on the equipment, a use cycle was conceived and all the operational forms were altered to permit conformance with this cycle.

The cycle is as follows:

- Insertion into hot cave for specimen installation.
- Removal from hot cave after specimen installation.
- Insertion into reactor beam port for test irradiation.
- Withdrawal from beam port after completing test, and positioning the loop for insertion into the hot cave for specimen change-over.

Normal operation of all the test equipment listed in figure 8 will follow this cycle. In addition, this equipment will operate submerged in the quadrant water, and with the exception of the carriages and test loops, it is accessible for maintenance only when the quadrant is drained.

Deviation from the projected schedules are anticipated because scheduled maintenance will only be performed coincident with quadrant draining.

The projected refrigerator maintenance schedule (figure 9) is related to the hours of operation which are recorded cumulatively on a time meter which operates when the expansion engines are operating. The maintenance performed is recorded in a refrigerator maintenance log. Total operating time is also maintained by recording start-up and shut-down time on the refrigerator operation forms.

The transfer system cycle form shown in figure 10 is typical of the equipment operation check lists that are maintained. They provide a combined check list and operational history compatible with the scheduled maintenance program. The data

on these forms is incorporated into a summary log, which, in turn, permits the scheduling of maintenance requirements during reactor down periods.

3.8.1.1 Test Loop Scheduled Maintenance

To conform with the projected test loop maintenance schedule, shown in figure 8, a form providing the required operating history is completed each time the loop is used for performance of a test. The form includes all activities necessary to complete an operational cycle , and the cumulative cycles of operation for the test loop. This information is then used to establish when scheduled maintenance is required. Any maintenance performed, scheduled or the result of a malfunction, was recorded in a maintenance log. A summary of these records indicating when scheduled maintenance was performed versus the total operating cycles to date is shown in figure 11.

During this reporting period, no malfunctions occurred during the performance of in-pile testing; however, there were indications of leakage in the specimen loading actuators and the loops were transferred to the hot laboratory area where the actuators were removed. The units were disassembled, inspected and new seals installed prior to reassembly. Each unit was hydrostatically and dynamically tested prior to reinstallation into the loop. Scheduled maintenance of the test loops was performed concurrently while the loops were in the hot laboratory.

3.8.1.2 Refrigeration System Scheduled Maintenance

The refrigeration system has operated a total of 2493 hours (743 hours this reporting period) since the system was overhauled. The increased operating time (from 500 to 743 hours) between the scheduled maintenance was permitted to provide additional time histories for future reliability analysis of the system. The extended operating period was justified in that any malfunction could be repaired without jeopardizing the testing schedules and that prior performance history (since overhaul) indicated that the system would perform beyond the 500 hour period without malfunctions.

A summary of the total operating time of each expansion engine and an indication of the type of maintenance performed is shown in figures 12, 13 and 14. When the engines were cleaned, each was disassembled, requiring the installation of both

O rings and valve body gaskets. Each time this was performed, this scheduled maintenance requirement was considered fulfilled and a new period initiated.

Piston rods have been replaced in all of the engines now in service and those removed will be inspected ultrasonically to establish their integrity. If these tests indicate the rods are satisfactory, they will be reinstalled during future maintenance periods.

In an effort to reduce observed helium leakage into the vacuum powder insulation of the engine pods, the seal surface for the flange body gasket had to be refaced. This required the fabrication of special holding fixtures and meticulous alignment to perform the required machining. The results observed after installation of the engines so modified have shown a significant reduction in the vacuum that can be maintained, which is, in turn, reflected in total refrigerator capacity for a set of operating parameters.

3.8.1.3 Carriage Scheduled Maintenance

A summary of the scheduled maintenance of the test loop carriages as projected in figure 8 is shown in figure 15. During this reporting period, carriages number 2 and 3 were removed from the quadrant for the performance of scheduled maintenance. Drive system bearings were replaced in carriage number 3 and other components in both carriages were replaced after inspection. Both carriages were tested and subsequently returned to the quadrant for use in the transfer system.

3.8.1.4 Transfer Table Scheduled Maintenance

A summary of the scheduled maintenance of the transfer tables as projected in figure 8 is shown in figure 16. During this reporting period, inspection and adjustments were made but no repairs were required.

3.8.1.5 Access Valve Routine Maintenance

Scheduled maintenance requirements shown in figure 8 for the beam port and hot cave access valve equipment have been performed as indicated in figure 16. During

this reporting period, routine inspections were made and the chevron seals at the beam port valve were replaced while the quadrant was drained. These were not required by the schedule but were performed to minimize the possibility of malfunction.

3.8.2 Repairs and Adjustments

During this reporting period, a number of repairs and adjustments were required for the test equipment. Some of these repair efforts were a continuation of effort previously reported (ref. 6) and some were required due to equipment malfunction during performance of the test program.

3.8.2.1 Test Loop Repairs

At the beginning of this reporting period, test loop required repair was in progress for test loop 201-002. During the reporting period, additional repairs were required on test loops 201-003 and 201-004 and design modification of the head assemblies was initiated. These problems are discussed in the following sections.

3.8.2.1.1 Test Loop 201-002

As previously reported (refs. 5 and 6), leakage in one of the refrigerant lines was noted in test loop 201-002. Further efforts during this reporting period enabled a more precise determination of the position and nature of the leak. It appears to be a circumferential crack in the weld of the aft joint between the bellows assembly used to compensate for the change in length between the inner and outer helium lines and the inner wall of the annular vacuum space insulating the refrigerant lines.

Attempts were made, using mock-up test fixtures with manufactured defects, to determine a method of line repair in situ. One repair method tried was an attempt to fill the defect with a metallic coating deposited by commercially available electro-chemical methods. Both copper and nickel were tried as coatings. Initial difficulty was encountered in obtaining a chemically clean surface for plating the ID of a stainless steel tube using methods feasible for remote techniques. A combination of electro-cleaning with alternating polarity and organic solvent chemical

cleaning provided a surface on the tubing ID adequate for electro-plating. However, during deposition even at the lowest amperage available, the metal formed nodular dendritic growths at the edge of the discontinuity, forming craters rather than sealing the defect.

The electro-chemical approach was abandoned after this failure and several additional attempts were made to seal manufactured defects using epoxy and silicone sealants. Adequate room temperature sealing of the defects was obtained in several instances using these materials. However, in all cases leaks developed on thermal shocking with liquid nitrogen.

Further investigation of possible repair methods for this loop is being undertaken; however, no method compatible with the remote handling requirements appears feasible at this time.

3.8.2.1.2 Test Loop 201-003 and Test Loop 201-004

As reported in section 3.2.1, test loop 201-004 developed leakage in the specimen loading actuator. This leakage, first observed during operation in reactor cycle 44P, was not considered sufficient to appreciably affect the load rate and therefore, the loop was retained in service throughout the reactor cycle. During reactor down cycle 45S, the loop was removed from the quadrant and transferred to the hot laboratory work area.

Inspection of the actuator in the test loop indicated the difficulty was associated with the rod end seals. These seals were replaced, the actuator was rebuilt and reinstalled in the test loop and tested. The loop was returned to quadrant D and is ready for operation in reactor power cycle 45P, scheduled for early in the next reporting period.

The actuator rod end seals in test loop 201-003 were subsequently changed following a similar procedure. This was done to minimize the possibility of a similar decrease in load rate occurring in this loop during in-pile testing.

3.8.2.2 Refrigeration System Repairs

As discussed previously in reference 5, the evacuated thermal insulating space in one set of flexible helium transfer lines was known to be leaking. The loss of the

vacuum surrounding the inner line caused a heat leak into the lines far exceeding the permissible rate and also reduced the available refrigeration to a level where a test specimen temperature of 30°R could not be maintained in the test loop.

The transfer lines terminate in a thermally isolated enclosure containing refrigerant shut-off and by-pass valves normally used to isolate the test loop from the refrigerant stream and to permit circulation of the refrigerant in the transfer lines to maintain them at low temperature during specimen change-over. These valves, in all three transfer line assemblies, have frequently malfunctioned or leaked so severely that they cannot be used for their intended application, thus requiring the utilization of manually operated valves in the manifold to isolate the test loops.

As previously reported (ref. 6) a leak developed in the flexible line of another transfer line assembly. This assembly was shipped to the manufacturer after the initial assembly which had been modified and repaired was received at Plum Brook Reactor Facility.

Design modification includes incorporation of soft seats in the valves and provision for seat replacement without cutting or welding of the valve chest as formally required.

The manufacturer was unable to locate the leak in the inner flexible section of the helium transfer line; therefore, the entire section was replaced.

Subsequent leak testing performed by flowing hot gas through the inner line and valve installation and applying heat to the external line with electrical resistance tape type heating elements, to affect back-out of the vacuum space, indicated a leak existed. Initially, the leak was assumed to be the result of high bake-out temperatures damaging the indium seal used to isolate the vacuum space from the flow through the valve body. However, subsequent leak testing after replacement of the seal indicated other leaks existed in the other leg of the transfer line assembly; therefore, it was not conclusively ascertained that the indium seal was leaking.

Replacement of the other inner flexible line and final leak testing were observed by Lockheed personnel and the results indicate the system integrity is satisfactory.

The crossheads incorporated in each of the engine pods were removed for repacking the stuffing boxes for the engine valve and piston rods. After replacement of these packings the crossheads were reinstalled and connected to the engines.

3.8.3 Corrosion of Test Equipment

As previously reported in reference 6, evidence of corrosion had been observed in test head assembly 201-010. A design modification of the head assembly (see section 3.8.2.1.4) has been initiated incorporating numerous design features recommended by the corrosion engineer previously consulted. Reducing the welding of thin gage metal, cleaning and passivation consistent with total test loop design are incorporated together with other improvements to minimize the possibility of deionized water contacting potential corrosion areas. Other features were not incorporated due to design implications on the test loop; however, the new requirements will minimize corrosion susceptability and result in increased head assembly life.

As discussed in detail in reference 6, the welded stainless steel actuator bellows assemblies which separate helium from cooling water in the test loops have exhibited corrosion at the welded peripheral seams. To alleviate this problem, the welded bellows in the test loops will be replaced by two sections of two-ply hydraulically formed bellows, welded end-to-end and welded to suitable adapters at the ends. The end-to-end welding is required because the section lengths are limited by the forming technique. The spring rate of the new bellows assembly is about 22 lb/in.

The first replacement was made in the prototype loop to determine the best installation procedures before replacement of the bellows in the other loops. Following the replacement of a bellows in the prototype loop, a new bellows was installed in the non-irradiated test loop 201-005, to permit further refinement of the techniques. The methods developed provided leak-free joints in these loops. However, it remains to be determined if they are adequate for fabrication of leak-free welds in the limited working exposures permitted on the irradiated test loops. Replacement of the bellows in the irradiated test loops, however, will not be attempted until necessitated by a bellows failure.

3.9 EXPERIMENT DESIGN MANUAL AND HAZARDS ANALYSIS

As previously reported (ref. 5), revisions of the Experiment Design Manual and Hazards Analysis were required since:

- The present test program includes irradiation exposures at 140°R, 320°R and 540°R as well as at 30°R. Prior

experiment approval from the Plum Brook Reactor Facility Safeguards Committee was predicated on operation at 30°R, freezing-out gaseous impurities in the refrigerant prior to irradiation of the gas.

- The present test program includes cyclic loading from tension to compression, thus changing the stress pattern on the test loop head from that used as a basis of the stress analysis on which prior experiment approval was based.

3.9.1 Analysis of Hazards Due to Gas Activation

The modification of the Experiment Design Manual and Hazards Analysis required by the increased irradiation temperature was completed and reported in the preceding reporting period (ref. 6). Briefly, these changes consisted of an activation analysis of the possible impurities in the refrigerant and determination of the degree of hazard incurred in the event of the maximum credable incident.

It was determined that only three product radioisotopes, H^3, Ar^{41} and Ne^{23}, would be present in the refrigerant after irradiation in significant quantities. Since the maximum credable incident would be rapid release of all of the refrigerant into the relatively small volume ($\approx$8800 ft^3) of the compressor building, calculations were based on refrigerant dilution to that volume. A summary of the significant data for these radioisotopes is shown below:

Isotope	Half-Life	ACTIVITY			MPC*	
		dis/sec	μc	diluted to 8800 ft^3 μc/cm^3	Controlled Area	Uncontrolled Area
H^3	12.26 y	3.40 (+7)**	9.43 (+2)	3.49 (- 6)	2.0 (-3)	4.0 (- 5)
Ar^{41}	1.83 h	7.85 (+4)	2.12 (0)	8.50 (- 9)	2.0 (-6)	4.0 (- 8)
Ne^{23}	38.00 s	6.60 (+3)	1.78 (-1)	7.15 (-10)	3.0 (-9)	1.0 (-10)

Since Neon-23, the only isotope exceeding the maximum permissible concentration for uncontrolled areas under conditions of instantaneous release, has a half-life of

* MPC - Maximum Permissible Concentration (μc/cm^3)

** Numbers in parenthesis indicate power of 10.

less than forty seconds and the system circulation period is several minutes, no hazard from release of refrigerant exists. Similar calculations indicated no hazard from personnel exposure to piping or equipment components. The calculations and conclusions were included in the Experiment Design Manual and Hazards Analysis and the Plum Brook Reactor Facility Safeguards Committee has granted approval for experiment operation at all temperatures up to 540°R. These calculations and conclusions are presented in greater detail in reference 6.

3.9.2 Analysis of Hazards Due to Cyclic Loading

A refined hazards analysis, including various components in the test loop, operating in tension and compression in cyclic loading up to a maximum of 3500 pounds load, was initiated during this reporting period. The analysis is to determine if the head bolts and seal arrangement, the specimen holder and the end cap of the head assembly are subject to fatigue failure under the most severe operating conditions and if such a failure could constitute a hazard to the reactor or test facility operation. The analysis will be more extensive than originally anticipated; but it will be submitted for NASA approval early in the next reporting period.

4 TEST PROCEDURES

The test procedures discussed in the following sections are required for the acquisition of data under the carefully controlled test program environmental conditions and the reduction, analyses and interpretation of the data thus generated. Brief discussions of test specimen designs, flux mapping, tensile test methods, fatigue test methods, and post-exposure structural studies follow.

4.1 TEST SPECIMEN DESIGN AND FABRICATION

The test specimens used in this program are miniaturized due to various restrictions on the test equipment imposed by the nuclear cryogenic environment. Two specimen designs, one for the tensile test program and one for the fatigue test program, are required. The configuration of these test specimens is shown in figures 17 and 18.

4.1.1 Tensile Specimens

The tensile specimen shown in figure 17 and discussed in detail in reference 5, represents a miniaturization of the standard ASTM E-8 specimen (ref. 3). It is essentially a cylindrical tensile coupon, approximately two inches overall length, with threaded ends. The specimen gage length is 0.5 inch with a nominal diameter of 0.125 inch at the mid-point in the gage length, which conforms to the standard 4:1 gage length to diameter ratio. There is a slight taper to the mid-point of the gage length to insure fracture in that area.

All the tensile specimens required for the current scope of the test program have been manufactured and delivered to Plum Brook.

4.1.2 Fatigue Specimens

Fatigue specimen design is not as standardized as tensile specimen design and the fatigue specimens to be used in this program will represent a departure from any

commonly used design. However, the specimen geometric configuration is similar to that used by other investigators, such as Coffin (ref. 4). This will allow some degree of comparison between this data and data from other laboratories. The specimen design under investigation is shown in figure 18.

The thirty specimens previously ordered (ref. 6), fifteen fabricated from Aluminum 1100-0 as typical of low strength materials and fifteen from 18 Ni 300 Maraging Steel as representative of high strength materials, have been received at Plum Brook for use in preliminary testing and procedure development.

The structural studies of the specimens failed in fatigue in the preceding quarter (ref. 6) were continued; this activity is discussed in section 4.5.

4.2 FLUX MAPPING

Accurate knowledge of the fast flux available in HB-2, both spectral shape and level, is necessary to determine the irradiation exposure required to provide the desired integrated flux for each specimen.

The fast flux was measured at various reactor operational parameters during the preceding reporting period (ref. 6) using fast neutron threshold foils (table 1). The results of these measurements are reported in detail in reference 6 and shown in figure 19.

A meeting of NASA and Lockheed personnel was held early in this reporting period for a discussion of the flux mapping activities. It was concluded that there was no significant change in flux level or spectral shape since the conclusion of the screening program. The flux curves used in the earlier program (ref. 1 and ref. 6) are still in use as the basis of exposure calculations.

4.3 TENSILE TEST METHODS

Tensile testing requires the measurement and recording of several data for post-

testing evaluation. These data include:

- Measurement and recording of the load on the specimen continuously from the initial application until specimen failure.

- Measurement and recording of the elongation of the specimen continuously from initial application of the load until a point after the total elongation represents more than 0.2 percent permanent strain.

- Measurement of specimen temperature throughout irradiation and testing.

- Measurement of elongation (a measure of total permanent strain) and reduction of area (a measure of non-uniform strain) on failed specimens as a post-irradiation examination.

The test methods required to provide accurate records of these parameters have been discussed in some detail in a previous report (ref. 5). A brief summary of these methods will be included in the following section, with a more detailed discussion of the specimen temperature control development work conducted during this reporting period.

4.3.1 Load-Strain Measurement and Recording, Data Reduction, Ductility Measurements

Load measurements are monitored with a ring type dynamometer, using a linear variable differential transformer (LVDT) to measure the ring deflection resulting from the applied load. Elongation is measured using an extensometer in which a LVDT measures the incremental separation between two knife edges initially 0.50 inch apart on the gage length of the specimen.

For load-elongation recording, the monitoring instruments convert the load or elongation into electrical signals, of which the strength is a function of the magnitude of the measured parameter. The electrical impulse from each of these instruments

is amplified and plotted automatically by an X-Y recorder. Load appears as the Y plot, elongation as the X plot and the resultant load-elongation curves are recorded on graph paper as a permanent record of these test data. The extensometer is capable of measuring only about 0.010 inch elongation with reliable accuracy. After this limit of approximately two percent total strain has been reached, the recorder is switched to a load-time plot traveling at a rate of 0.02 in/sec.

The load-elongation curve developed during testing on the X-Y recorder and the initial specimen dimensions provide data for the determination of the ultimate tensile strength (F_{tu}) and the tensile yield strength (F_{ty}). The modulus of elasticity may be approximated from these curves, but an exact determination of this value is unobtainable due to the method of extensometer installation imposed by the necessity of using remote handling techniques.

Elongation and reduction of area values are obtained by fitting the broken specimens together and measuring the fractured gage length and minimum diameter by means of a micrometer stage and hair line apparatus accurate to $\pm$ 0.001 inch. These values are reported as the change in magnitude from original specimen dimensions expressed as a percentage of the original value.

All of these methods conform to the requirements of ASTM Specification E-8 (ref. 3), with an extensometer installation classification of B-2 under ASTM Specification E-83 (ref. 3).

4.3.2 Specimen Temperature Control

Test specimen temperature control is required for three different test conditions: (1) expose and fracture at specified temperature without intervening warm-up, (2) expose at 30°R followed by warming to and fracture at higher temperature, and (3) expose at 30°R, anneal at a higher temperature and fracture at 30°R.

The direct measurement of these temperatures using thermocouples or other temperature measuring transducers was not considered practicable when performing a series of these tests (ref. 1). An alternate method of establishing the temperature at the specimen was incorporated into the refrigerator. This involves measurement of the temperature at the manifold inlet and return using platinum resistance type thermometers. These temperature measurements together with the

return manifold sensor temperature establish the operational characteristics of the refrigerator permitting the determination of performance parameters which are related to the specimen temperature.

The control conditions required by (1) above, essentially the maintenance of a predetermined specimen temperature during irradiation and testing under steady-state conditions, were established during an earlier reporting period and described in reference 5.

The technique used consisted of calibration of three copper-constantan thermocouples attached to a Titanium 6Al-4V test specimen against a NBS calibrated platinum resistance thermometer and using this instrumented specimen as a working standard to establish refrigeration system operating parameters required for the maintenance of the desired specimen temperature both in-pile and out-of-pile. This activity is reported in detail in reference 5 and reference 6 and the important results are summarized in tables 2 and 3.

The control conditions required by (2) and (3) above have not as yet been completed since, as mentioned in section 5, the higher temperature in-pile testing is not far advanced. This activity will be a continuing one during the tensile testing program; however, no new data was available at the time of this report. Temperature versus time plots for each of the various test conditions will be presented in a subsequent report.

4.4 FATIGUE TEST METHODS

After modification of test equipment (see sections 3.2.2 and 3.4) and determination of a suitable test specimen (see section 4.1.2), low-cycle fatigue characteristics of the selected materials will be studied. The test procedure will consist of applying a predetermined stress load at a cyclic rate of 6 cpm for 10,000 cycles unless the test is interrupted before this point by specimen failure.

Written preliminary procedures for the fatigue test methods have been prepared and approved by NASA. The approval of the preliminary procedures authorizes out-of-pile fatigue testing. These tests will be inagurated in the next reporting period. As reported elsewhere (section 3.9), the revisions to the Experiment Design Manual and Hazards Analysis required prior to in-pile fatigue testing are in the process of preparation.

4.5 STRUCTURAL STUDIES

Structural studies are to be performed with the aid of optical microscopy, electron microscopy, and X-ray diffraction. Procedures for these methods are being developed in cooperation with NASA Plum Brook Reactor Facility personnel.

As previously reported (ref. 6), a fatigue specimen failed during test loop development had been submitted to the NASA Plum Brook Hot and Metallurgical Laboratories Section for the development of electron microscope techniques.

Replication techniques for electron fractograph studies on the failed surface were developed. Figure 20 shows an electron fractograph made from a replica prepared during this program. Fatigue striations are not distinct on this fractograph, but the fractured surface shows the equiaxed dimples which are characteristic of fatigue failures occurring during tensile loading. Shear dimples, which would be indicative of specimen misalignment, were not observed. Additional replicas have been prepared using refined techniques in an effort to improve detail reproduction. Electron micrographs from these later replicas were not available in time for publication in this report.

5 TEST PROGRAM

The scope of the test program, including the basis for material selection, has been previously reported (ref. 5 and ref. 6) and consists of the following major items of investigation:

- Effects of cryogenic irradiation and annealing on tensile properties of Aluminum 1099-H14.
- Effects of irradiation at 30°R on commercially pure titanium and on several titanium alloys.
- Effects of cryogenic temperatures on tensile properties of Aluminum 7178-T6 and commercially pure titanium.
- Effects of irradiation on low-cyclic rate fatigue properties of titanium and titanium alloys.

The scope of the program is logically divided into two phases:

- The tensile testing phase, including the items listed in table 4, to be discussed in section 5.1.
- The fatigue testing phase, including the items listed in table 5, to be discussed in section 5.2.

The materials, pure aluminum, titanium and titanium alloys, to be tested during this program were selected on the basis of their potential usefulness in nuclear-cryogenic space hardware and their ability to yield fundamental information in terms of basic mechanisms occurring in metals and alloys during and following fast neutron irradiation at cryogenic temperatures. All test specimens used in the program are fabricated from materials manufactured using extraordinary precautions and provided with complete chemical and metallurgical pedigrees. A summary of the pedigree information is given in tables 6 and 7.

During this reporting period, forty-four out-of-pile tensile tests were performed to complete the out-of-pile tensile testing phase of the program. Also, a total of eleven tensile specimens were successfully irradiated from 5×10^{15} nvt to 1×10^{18} nvt and tested at temperatures ranging from 30°R to 320°R. No fatigue testing within the scope of the program was performed during this period.

5.1 TENSILE TESTING

The tensile testing phase of the program, as shown in table 4, consists of testing both unirradiated control specimens and irradiated specimens of polycrystalline high purity aluminum, Aluminum 1099-H14 and irradiated specimens of three titanium alloys; Titanium 55A, Titanium 5Al-2.5 Sn, and Titanium 6Al-4V. Aluminum 7178-T651 and Titanium 55A are tested at two temperatures, unirradiated, to obtain data for use in specimen size correlation studies being performed by NASA.

5.1.1 Effects of Cryogenic Irradiation and Annealing on Aluminum 1099-H14

Aluminum 1099 is a high purity (99.99%) aluminum and, although it is of little value as a structural material, was selected for study because it has exhibited very large effects due to irradiation at 30°R (ref. 1). The material also exhibited some annealing effects as well as effects due to deformation prior to irradiation. This combination of effects offers a good opportunity for study of irradiation-cryogenic mechanisms at a relatively low level of integrated neutron flux.

The testing of Aluminum 1099, as set forth in table 4, consists of out-of-pile control tests and in-pile tests for the following four studies:

- Effects of irradiation at 30°R
- Effects of irradiation temperature
- Effects of annealing and test temperature following irradiation
- Effects of annealing

The control tests on the unirradiated Aluminum 1099-H14 specimens were completed during this period. Testing of irradiated specimens was continued; nine specimens were tested at several test conditions during this period. The results of these tests now available are given in tables 8 through 12. The temperature dependence of the mechanical properties of Aluminum 1099-H14, unirradiated, is shown in figure 21. The testing of irradiated specimens is insufficiently advanced to allow evaluation of the test results.

5.1.1.1 Effects of Test Temperature, No Irradiation, Control Tests

Aluminum 1099-H14 was tested at 30°R, 140°R, 320°R, and 540°R without irradiation to obtain control test data for the nuclear cryogenic irradiation and annealing studies. These data are complete and are given in table 8, along with pertinent data from the previous screening program (ref. 1). The magnitude of the cryogenic effects on the tensile properties are shown in the family of curves plotted in figure 21. Figure 22 shows a family of load-elongation curves for the various test temperatures.

Extra test values were obtained for control purposes at the various temperatures to determine if there were any possible systematic effects of temperature changes prior to testing. If existant, such changes could be attributed to differential thermal contraction in the specimen loading components of the test loop and would have to be considered in the evaluation of the annealing data taken with the test loop components subjected to the same temperature changes. It should be noted that special precautions during insertion of the specimen and preparation for testing are meant to exclude this possibility. If observed at all, such effects would be observed in the yield strength values. Evaluation of the data indicates that in nearly all cases, there are no statistically significant differences (at the 90% confidence level).

There is a significant difference, small compared with irradiation effects, at 320°R but this difference is attributable to location in the stock from which the specimens were taken. The test specimens are numbered according to the location from which they were taken in the sheet stock and are generally chosen at random for a particular test condition. This results in effects due to variations in the material and tensile properties within the stock being averaged out. However, in this particular case there was an error in the choice of specimens with the resulting nonrandom location which could easily account for the small but statistically significant difference between the yield strength values from the two groups of tests at 320°R. This

conclusion is confirmed by differences in ultimate strength and ductility values, small compared with test temperature effects, which can also be attributable to location in the stock.

Although there are no significant differences between the various groups of tests at 30°R, there is a significant difference between these values as a group obtained in the new program and the values obtained at the same temperature in the screening program (ref. 1). These differences have to be attributed to differences in work hardening during fabrication because of the lack of similar differences in the ultimate strength and ductility values. Although little work has been done at extremely low temperatures on this material, test data from other laboratories (ref. 7) indicates the probability of a cold-work dependent divergence of F_{ty} at temperatures below 140°R for commercially pure aluminum (Aluminum 1100).

Because the noted differences can be attributed to stock variation and fabrication variables rather than to differences in test conditions, the means and the ranges of all the values obtained at the particular temperatures are being used as control data.

Examination of the family of curves shown in figure 21 shows that the F_{ty} is relatively insensitive to temperature variation while the F_{tu} is strongly temperature dependent, particularly below 140°R. This, naturally, produces a profound effect on the F_{ty}/F_{tu} ratio. Also worthy of note is the rather sharp drop in reduction of area occurring near 140°R. The relatively high reduction of area to elongation ratio at temperatures above 140°R indicate a large degree of necking down during late plastic behavior; a value near unity for this ratio at lower temperatures is indicative of uniform plastic strain.

Although the range of the data for the F_{ty} obscures the magnitude of a specific effect, the overall relationship of the several tensile test parameters justifies the general validity of the difference of cryogenic strain mechanism discussed in the summary report of the screening program (ref. 1).

5.1.1.2 Effects of Irradiation at 30°R

This study is to determine the effects of neutron irradiations up to 3×10^{17} nvt ($E > 0.5$ Mev) at 30°R on Aluminum 1099-H14. The specimens are held at 30°R throughout irradiation and tensile testing.

The partial test data so far obtained for several integrated flux levels are presented in table 9.

Preliminary analysis of the partial data indicates the probability of a marked dependence of the F_{ty}, the F_{ty}/F_{tu} ratio and the ductility parameters on irradiation level. However, detailed discussion of these effects will be deferred until completion of the 30°R irradiation testing of Aluminum 1099-H14.

5.1.1.3 Effects of Irradiation Temperature

This study of the effects of irradiation temperature on Aluminum 1099-H14 has begun and the data so far available are shown in table 10. The specimens are maintained at a specified temperature throughout neutron irradiation to 1×10^{17} nvt, (E>0.5 Mev) and testing.

The data are only partially complete and further discussion will be deferred until a later report.

5.1.1.4 Effects of Annealing and Test Temperature Following Irradiation

This study is to determine the magnitude of irradiation effects remaining at various temperatures following irradiation at 30°R. The specimens are irradiated to 1×10^{17} nvt (E>0.5 Mev) at 30°R and then warmed to a higher temperature and annealed at that temperature for an hour and tested at that temperature.

The data so far obtained is given in table 11. Further discussion will be deferred until the tests are completed.

5.1.1.5 Effects of Annealing Following Irradiation

This study is to determine the magnitude of annealing at various temperatures of irradiation effects occurring at 30°R. The specimens are irradiated to 1×10^{17} nvt (E > 0.5 Mev) at 30°R and then warmed to a higher temperature and annealed at that temperature for an hour. They are then cooled to and stabilized at 30°R and tested.

The data so far obtained is given in table 12. Discussion of the annealing effects will be presented in a later report when these tests are complete.

5.1.2 Effects of Irradiation at 30°R on Titanium and Titanium Alloys

The titanium alloys of primary alpha structure usually exhibit good cryogenic properties due to the hexagonal close-packed structure of this phase. They have a high modulus of rigidity and a high strength-weight ratio which is comparable with the best aluminum alloys. Also, they have allowable working temperatures which are higher than the aluminum alloys. This makes them more suitable for rocket components since initially during rocket firing at cryogenic temperatures they may see elevated temperatures.

The tensile testing phase of the program, as set forth in table 4, consists of three investigations:

- Effects of irradiation at 30°R on commercially pure titanium (Ti-55A).
- Effects of interstitial content in Ti-5Al-2.5 Sn on changes due to irradiation at 30°R
- Effects of initial heat treatment of Ti-6Al-4V on changes due to irradiation at 30°R

Out-of-pile test data and in-pile test data for irradiations to 1×10^{17} nvt (E>0.5 Mev) were obtained in the screening program (ref. 1), and some additional data were obtained during a previous reporting period (ref. 6). During the present reporting period two additional in-pile tests to 1×10^{18} nvt (E > 0.5 Mev) were completed.

5.1.2.1 Effects of Irradiation At 30°R on Titanium 55A

Titanium 55A, although of only moderate strength, has good forming characteristics and meets the requirements for some nuclear rocket applications; however, it was

selected for study in this program primarily because it is essentially commercially pure elemental titanium and may yield important fundamental information. It has exhibited a small but measurable increase in yield strength due to fast neutron irradiation of 10^{17} nvt at 30°R.

This phase of the test program was completed in a previous period and reported in reference 6. The test results are repeated in table 13 and plotted as a function of integrated neutron flux at 30°R in figure 23. Figure 24 shows typical load-elongation curves for the various irradiation levels included in the testing phase of the investigation.

The data plotted in figure 23 show that there is a direct dependence of F_{tu} and F_{ty} on irradiation level (to 10^{18} nvt) accompanied by a significant but not critical reduction in ductility parameters. No degradation of any mechanical property of sufficient magnitude to compromise engineering integrity after exposures to 10^{18} nvt was observed.

Titanium 55A is essentially a polycrystalline titanium of commercial purity. This material was tested in the annealed condition, but with standard interstitial content; therefore, the population of "foreign" substitutional solute atoms should be small but the number and distribution of interstitial atoms should be similar to the interstitial populations in alloyed materials. Since alpha titanium is a hexagonal close packed lattice material, slip might be expected to be fairly laminar - particularly with a relatively small population of substitutional atoms. The presence of interstitials might be expected to increase turbulence of the flow during slip. Since the reported F_{ty} is based on 0.2% offset rather than on divergence from Hookes Law, the relatively low (for titanium alloys) F_{ty}/F_{tu} ratio of about 0.7 at 30°R, both unirradiated and at 1×10^{17} nvt, indicate a rather laminar behavior; the increase of this parameter to 0.75 at 6×10^{17} and 0.78 at 1×10^{18} indicates an increase in turbulence resultant from lattice imperfections induced by increased irradiation levels.

5.1.2.2 Effects of Interstitial Content in Ti-5Al-2.5 Sn On Changes Due To Irradiation At 30°R

Titanium - 5% Al - 2.5% Sn is a fairly high strength alpha phase alloy ($F_{tu} \approx 120$ Ksi at room temperature). It is now commercially available in the extra low interstitial

grade (less than 0.125% interstitials, and designated eli) and possibly would be specified in this grade by designers for use in shells, pressure vessels and pump parts of nuclear rockets. However, recent nuclear cryogenic tests to 10^{17} nvt ($E > 0.5$ Mev) at 30°R indicate that the ultimate strength of the eli material is adversely effected by the neutron irradiation. It is conceivable that higher irradiations might cause adverse effects on various properties, including fatigue strength, which would negate any inherent advantages of the eli material. In addition, tensile testing of both grades of this alloy might yield fundamental information on the general role of interstitials in nuclear cryogenic processes occurring in all metals and alloys.

During this reporting period in-pile tensile testing following irradiation of 1×10^{18} nvt ($E > 0.5$ Mev) at 30°R was begun on this material in the extra low interstitial (ELI) grade. Test results are presented in table 14 along with data obtained previously (ref. 1). It is deemed advisable to defer further discussion of this material until complete test data is available, not only on Titanium 5Al-2.5 Sn (ELI), but also for Titanium 5Al-2.5 Sn (Std) to allow a comparative evaluation of the effects of interstitial content.

5.1.2.3 Effects of Initial Heat Treatment of Ti-6Al-4V On Changes Due To Irradiation At 30°R

Titanium - 6% Al - 4% V is an alpha-beta alloy in which the beta phase is metastable in the annealed condition and largely transformed to alpha by aging. The ultimate strength of the aged materials is about 170 ksi at room temperature with favorable cryogenic characteristics and it is very likely to be specified for shells and pressure vessels in space hardware. Irradiation to 10^{17} nvt at 30°R causes measurable increases in the strength of the aged material but not the annealed material. High irradiations at the same temperature may confirm this effect and may possibly yield fundamental information regarding the effects of nuclear irradiation on precipitation processes. Such effects are still not very well understood although they are of wide general interest to both basic researchers and applications people.

These materials are to be irradiated to 1×10^{18} nvt ($E > 0.5$ Mev) at 30°R and tested at 30°R in this program; but as of the end of this reporting period none of these tests have been completed.

5.1.3 Effects Of Cryogenic Temperature On Tensile Properties Of Aluminum 7178-T651 And Titanium 55A

The tests of Aluminum 7178-T651 and Titanium 55A at 140°R and 540°R, unirradiated, have been completed and are given in tables 15 and 16. These data are for use in specimen size correlation studies being performed by NASA personnel and further discussion is not warranted.

5.2 LOW-CYCLE FATIGUE TESTING

The low-cycle fatigue testing phase of the program is shown in table 5. The test materials to be used are the same as those used in the titanium and titanium alloys portion of the tensile testing program.

No test results are as yet available from low-cyclic rate fatigue testing.

6 REFERENCES

Reference

1 Lockheed Nuclear Products: Effect of Nuclear Radiation on Materials at Cryogenic Temperatures. NASA CR-54881, 1966.

2 Lockheed Nuclear Products: Modification and Major Overhaul of Cryogenic Irradiation Facility at Plum Brook Reactor Facility. NASA CR-54770.

3 Anon: ASTM Standards, The American Society For Testing Materials, 1958, Part 3.

4 Coffin, L.F. Jr.; and Tavernelli, J.F.: The Cyclic Straining and Fatigue of Metals. Trans. Met. Soc. AIME, Vol 215, Oct. 1959, pp 794-807.

5 Lockheed Nuclear Products: Effect of Nuclear Radiation on Materials at Cryogenic Temperatures. NASA CR-54787, November 1965.

6 Lockheed Nuclear Products: Effect of Nuclear Radiation on Materials at Cryogenic Temperatures. NASA CR-54904, February 1966.

7 Cryogenic Materials Data Handbook, Technical Document Report No. ML-TDR-64-280, August 1964.

7 TABLES

TABLE 1 FLUX MAPPING FOILS

Type of Foil	Nuclear Reaction	Threshold Energy, E_T (Mev)	Cross Section ($\times 10^{-24}$ cm^2)
Indium	$In^{115}(n,n')In^{115\,m}$	0.45	0.20
Neptunium	$Np^{237}(n,f)\,Ba^{140}$	0.75	1.52
Uranium	$U^{238}(n,f)\,Ba^{140}$	1.45	0.54
Sulfur	$S^{32}(n,p)\,P^{32}$	2.9	0.284
Nickel	$Ni^{58}(n,p)Co^{58}$	5.0	1.67
Magnesium	$Mg^{24}(n,p)Na^{24}$	6.3	0.0715
Aluminum	$Al^{27}(n,\alpha)\,Na^{24}$	8.6	0.23

TABLE 2 IN-PILE TEMPERATURE CORRELATION DATA

Test Run	Specimen Temperatures (°R) Fwd.	Mid.	Aft	Refrig. Temperatures (°R) Loop Inlet	Loop Return	Return Manifold	Heater Loads Main (watts)	Trim (watts)	Expansion Engine Pressure Ratio	Speed (RPM)
(30°R)										
1	30.4	29.9	30.3	29.1	32.3	32.3	200	40	6.1:1	325
2	30.7	30.3	30.6	29.0	32.6	32.6	200	25	6.0:1	320
3	30.4	29.8	30.2	29.1	32.5	32.5	200	30	6.1:1	320
(70°R)										
1	70.2	70.1	70.1	67.8	76.6	76.6	1200	20	6.1:1	325
2	70.4	70.3	70.1	67.3	77.1	77.0	1100	35	6.0:1	325
(140°R)										
1	140.0	139.6	139.8	136.2	150.5	150.0	1050	25	5.9:1	250
2	141.0	140.5	140.9	136.0	150.0	149.6	1100	5	6.0:1	250
(320°R)										
1	322.0	321.0	320.7	317.8	332.0	332.2	1300	70	6.0:1	250
2	320.5	319.6	320.1	318.2	331.7	331.8	1300	25	6.0:1	260

TABLE 3 OUT-OF-PILE TEMPERATURE CORRELATION DATA

Test Run	Specimen Temperatures (°R)			Refrig. Temperatures (°R)			Heater Loads		Expansion Engine	
	Fwd.	Mid.	Aft	Loop Inlet	Loop Return	Return Manifold	Main (watts)	Trim (watts)	Pressure Ratio	Speed (RPM)
(30°R)										
1	30.2	30.1	30.3	29.5	31.0	31.2	350	20	6.1:1	300
2	29.6	29.4	29.7	29.7	31.3	31.4	400	60	6.2:1	290
3	29.8	29.3	29.5	29.2	30.5	30.5	400	10	6.1:1	280
(70°R)										
1	70.3	70.1	70.6	68.0	72.1	72.0	1350	10	6.0:1	280
2	70.1	69.9	70.4	68.0	72.2	72.0	1250	60	6.2:1	270
(140°R)										
1	140.2	140.1	140.4	138.0	142.0	142.0	1600	35	6.1:1	260
2	140.6	140.4	140.8	138.5	142.7	142.5	1550	60	6.2:1	260
(320°R)										
1	320.1	320.1	320.2	318.1	322.3	322.0	1700	55	6.0:1	260
2	320.8	320.9	321.0	319.1	323.5	323.1	1650	25	6.0:1	270

TABLE 4 TENSILE TEST PROGRAM (SCOPE)

Material	Condition	Number Specimens	Exposure nvt (E>0.5 Mev)	Exposure Temperature (°R)(1) Exposure	Post-Exposure	Remarks
1099 Al	-H14	3	5×10^{15}	30	--	(10)
1099 Al	-H14	3	5×10^{16}	30	--	(10)
1099 Al	-H14	3	1×10^{17}	30	--	(2) (9)
1099 Al	-H14	3	3×10^{17}	30	--	(9)
1099 Al	-H14	3	0	140	--	(9)
1099 Al	-H14	3	1×10^{17}	140	--	-
1099 Al	-H14	3	0	320	--	(9)
1099 Al	-H14	3	1×10^{17}	320	--	(9)
1099 Al	-H14	3	1×10^{17}	540	--	-
1099 Al	-H14	3	0	30	140	(3) (9)
1099 Al	-H14	3	1×10^{17}	30	140	(4) (10)
1099 Al	-H14	3	0	30	320	(3) (9)
1099 Al	-H14	3	1×10^{17}	30	320	(4) (10)
1099 Al	-H14	3	0	30	540	(3) (9)
1099 Al	-H14	3	1×10^{17}	30	540	(4)
1099 Al	-H14	3	0	30	140	(5) (9)
1099 Al	-H14	3	1×10^{17}	30	140	(6) (10)
1099 Al	-H14	3	0	30	320	(5) (9)
1099 Al	-H14	3	1×10^{17}	30	320	(6)
1099 Al	-H14	3	0	30	540	(5) (9)
1099 Al	-H14	3	1×10^{17}	30	540	(6)
Ti-55A	Annealed	5	0	540	--	(7) (9)
Ti-55A	Annealed	5	0	140	--	(7) (9)
Ti-55A	Annealed	3	6×10^{17}	30	--	(8) (9)
Ti-55A	Annealed	3	1×10^{18}	30	--	(9)
Ti-5Al-2.5 Sn (ELI)	Annealed	3	1×10^{18}	30	--	(8) (10)
Ti-5Al-2.5 Sn (STD)	Annealed	3	1×10^{18}	30	--	(8)
Ti-6Al-4V	Annealed	3	1×10^{18}	30	--	(8)
Ti-6Al-4V	Aged	3	1×10^{18}	30	--	(8)
7178 Al	-T651	5	0	540	--	(7) (9)
7178 Al	-T651	5	0	140	--	(7) (9)

(1). Data from tests at 30°R and 540°R without irradiation available from screening program (ref. 1).
(2). Data from one specimen for this condition available from screening program (ref. 1).
(3). Control specimen, to be stabilized at exposure temperature before stabilizing and testing at post-exposure temperature.
(4). To be stabilized at post-exposure temperature before testing at post-exposure temperature.
(5). Control specimen to be stabilized at exposure and post-exposure temperatures before stabilizing and testing at 30°R.
(6). Temperature to be reduced to and stabilized at 30°R before testing at 30°R.
(7). Data from five additional specimens available from screening program (ref. 1).
(8). Data from tests at 30°R and 540°R without irradiation and at 30°R with 1×10^{17} nvt irradiation available from screening program (ref. 1).
(9). These tests completed at the end of this reporting period.
(10). These tests partly completed at the end of this reporting period.

TABLE 5 FATIGUE TEST PROGRAM (SCOPE)

Material	No. Specimens (Max)	Test Type	Exposure °R	Exposure Cpm	Exposure Location
Ti-55A	9	Fatigue During Exposure	540	6	Out-of-pile
Ti-55A	9	Fatigue During Exposure	30	6	Out-of-pile
Ti-55A	9	Fatigue During Exposure	30	6	In-pile
Ti-5Al-2.5 Sn (Eli)	9	Fatigue During Exposure	540	6	Out-of-pile
Ti-5Al-2.5 Sn (Eli)	9	Fatigue During Exposure	30	6	Out-of-pile
Ti-5Al-2.5 Sn (Eli)	9	Fatigue During Exposure	30	6	In-pile
Ti-5Al-2.5 Sn (Std)	9	Fatigue During Exposure	540	6	Out-of-pile
Ti-5Al-2.5 Sn (Std)	9	Fatigue During Exposure	30	6	Out-of-pile
Ti-5Al-2.5 Sn (Std)	9	Fatigue During Exposure	30	6	In-pile
Ti-6Al-4V (Ann)	9	Fatigue During Exposure	540	6	Out-of-pile
Ti-6Al-4V (Ann)	9	Fatigue During Exposure	30	6	Out-of-pile
Ti-6Al-4V (Ann)	9	Fatigue During Exposure	30	6	In-pile
Ti-6Al-4V (Aged)	9	Fatigue During Exposure	540	6	Out-of-pile
Ti-6Al-4V (Aged)	9	Fatigue During Exposure	30	6	Out-of-pile
Ti-6Al-4V (Aged)	9	Fatigue During Exposure	30	6	In-pile

Material	No. Specimens (Max)	Test Type	Exposure nvt(E>0.5 Mev)	°R	Post-Exposure °R	Post-Exposure Cpm
Ti-55A	9	Post-Exposure Fatigue	0	30	30	6
Ti-55A	9	Post-Exposure Fatigue	1×10^{17}	30	30	6
Ti-5Al-2.5 Sn (Eli)	9	Post-Exposure Fatigue	0	30	30	6
Ti-5Al-2.5 Sn (Eli)	9	Post-Exposure Fatigue	1×10^{17}	30	30	6
Ti-5Al-2.5 Sn (Std)	9	Post-Exposure Fatigue	0	30	30	6
Ti-5Al-2.5 Sn (Std)	9	Post-Exposure Fatigue	1×10^{17}	30	30	6
Ti-6Al-4V (Ann)	9	Post-Exposure Fatigue	0	30	30	6
Ti-6Al-4V (Ann)	9	Post-Exposure Fatigue	1×10^{17}	30	30	6
Ti-6Al-4V (Aged)	9	Post-Exposure Fatigue	0	30	30	6
Ti-6Al-4V (Aged)	9	Post-Exposure Fatigue	1×10^{17}	30	30	6

TABLE 6 MATERIAL COMPOSITION (PEDIGREE DATA)

ALLOY Temper	Lockheed Code	Element Weight Percent									
		Al	Cu	Fe	Si	Mn	Mg	Zn	Ni	Cr	Ti
Aluminum 1099 - H 14	8 Ba	99.99	0.003	0.001	0.001						
Aluminum 7178 - T 651	10 Ba	*	1.82	0.22	0.11	0.05	2.59	6.78	0.00	0.20	0.04

		Ti	C	Fe	Al	Sn	V		N_2	H_2	O_2
Titanium 55A Annealed	1 Aa	*	0.032	0.19					0.023	0.006	0.218
Ti-5Al-2.5 Sn (Std. I)	3 Aa	*	0.032	0.110	5.10	2.5			0.019	0.012	0.116
Ti-5Al-2.5 Sn (ELI) Annealed	8 Aa	*	0.033	0.028	5.43	2.41			0.011	0.0056	0.053
Ti-6Al-4V Annealed	2 Ac	*	0.010	0.170	5.95		4.00		0.022	0.006	0.065
Ti-6Al-4V Solution Treated and Aged	2 Aa	*	0.010	0.15	5.80		3.90		0.035	0.010	0.102

* Balance (by difference)

TABLE 7 MATERIAL PHYSICAL CHARACTERISTICS (PEDIGREE DATA)

Alloy / Temper	Lockheed Code	Form	Spec.	Vendor Code / Vendor Lot or Heat No.	F_{tu} (ksi)	F_{ty} (ksi)	Elongation (% in 4D)	Hardness	Grain Size ASTM No. (E112-58T)
Aluminum 1099 -H14	8 Ba	0.5" Plate	Vendor	199352 (1)	13.50*	12.90	20.5	Brinell	Not Measured
				199352	14.25**	13.95	19.5	26	
Aluminum 7178 -T651	10 Ba	1.0" Plate	Mil-A-	251777 (1)	89.55*	81.05	10.7	Brinell	Not Measured
			9180A	193-331	90.10**	80.80	10.7	168	
Titanium 55A Annealed	1 Aa	0.5" Round Bar	Mil-T-7993A Class II	(2) M-9186	70.5	60.5	35	Rockwell B 87	5
Ti-5Al-2.5 Sn (Std. I) Annealed	3 Aa	0.5" Round Bar	AMS-4910	(2) M-7888	131.0	127.0	22	Rockwell C 31-33	8
Ti-5Al-2.5 Sn (ELI) Annealed	8 Aa	0.5" Round Bar	Vendor 49021-1	(2) V-2402	119.3	101.2	17	Rockwell C 24.9	Not Measured
Ti-6Al-4V Annealed	2 Ac	0.5" Round Bar	Mil-T 9047C	(2) M8574	146.0	138.0	15.5	Rockwell C 30-33	Not Measured
Ti-6Al-4V Solution Treated And Aged	2 Aa	0.5" Round Bar	Mil-T 9047C	(2) M-9812	173.0	165.0	13	Rockwell C 33-36	Not Measured

* Longitudinal (orientation of test program specimens)
** Transverse

(1) Aluminum Company of America
(2) Titanium Metals Corporation of America

TABLE 8 TEST RESULTS, EFFECTS OF TEST TEMPERATURE, ALUMINUM 1099-H14 (NO IRRADIATION)

Specimen	Temp. (°R)	F_{tu} (Ksi)	F_{ty} (Ksi)	F_{ty}/F_{tu}	Elongation (%)	Reduction of Area (%)	Fracture Stress (Ksi)	Modulus(#) (10^3 Ksi)
Range of 5(a)	30	30.0-39.3	6.0-8.2	0.17-0.27	60-63	61-76	110-110	7-12
Mean of 5(a)	30	33.78	6.97	0.216	61.4	69.2	110.0	11
8 Ba 107	30 (1)	40.0	10.7	0.27	55	67	99	13
8 Ba 112	30 (1)	38.0	16.6	0.44	55	56	66	11
8 Ba 115	30 (1)	39.8	14.5	0.36	49	57	70	7
8 Ba 130	30 (2)	38.6	15.8	0.41	61	61	86	12
8 Ba 142	30 (2)	37.4	12.9	0.34	56	65	76	5
8 Ba 148	30 (2)	37.8	14.7	0.39	56	64	79	10
8 Ba 99	30 (3)	38.3	15.1	0.39	59	70	91	11
8 Ba 101	30 (3)	39.5	15.3	0.39	57	68	94	5
8 Ba 110	30 (3)	43.1	17.3	0.40	54	62	86	14
Mean of 14	30	37.25	12.00	0.319	57.9	65.4	92.6	10
8 Ba 136	140	21.5	14.0	0.65	48	78	41	8
8 Ba 138	140	21.0	13.1	0.62	48	78	41	4
8 Ba 139	140	21.1	13.9	0.66	46	82	54	6
8 Ba 125	140 (1)	22.9	13.9	0.61	46	73	48	8
8 Ba 144	140 (1)	22.8	15.1	0.66	47*	83*	-	4
8 Ba 154	140 (1)	21.1	13.9	0.66	47	83	61	19
Mean of 6	140	21.73	13.98	0.643	47.0	79.5	49.0	8

TABLE 8 (CONTINUED)

Specimen	Temp. (°R)	F_{tu} (Ksi)	F_{ty} (Ksi)	F_{ty}/F_{tu}	Elongation (%)	Reduction of Area (%)	Fracture Stress (Ksi)	Modulus(#) (10^3 Ksi)
8 Ba 149	320	13.9	11.9	0.86	28	82	46	8
8 Ba 150	320	13.3	11.5	0.86	27	84	41	6
8 Ba 151	320	14.4	12.7	0.88	28	81	42	10
8 Ba 127	320 (4)	15.8	15.1	0.96	22	61	25	9
8 Ba 128	320 (4)	15.1	13.6	0.90	25	71	33	8
8 Ba 129	320 (4)	14.6	12.8	0.88	23	71	30	12
Mean of 6	320	14.52	12.93	0.890	25.5	75.0	36.2	9
Range of 5(a)	540	11.7-14.3	11.0-13.5	0.94-0.95	20-26	74-83	-	9-10
Mean of 5(a)	540	13.18	12.48	0.942	22.8	79.0	-	9
8 Ba 120	540 (4)	12.5	11.2	0.90	20	63	-	8
8 Ba 122	540 (4)	13.0	12.5	0.96	22	67	24	8
8 Ba 124	540 (4)	13.4	13.2	0.99	19	61	23	11
Mean of 8	540	13.10	12.41	0.945	21.9	73.2	23.5	9

(a) From screening program (ref. 1)
(1) Stabilized at 30°R and then at 140°R before stabilizing and testing at 30°R
(2) Stabilized at 30°R and then at 320°R before stabilizing and testing at 30°R
(3) Stabilized at 30°R and then at 540°R before stabilizing and testing at 30°R
(4) Stabilized at 30°R before stabilizing and testing at indicated temperature
(#) For comparison purposes only
* Ductility values from 8 Ba 143 (Tested under the same conditions but loads not recorded due to instrumentation malfunction)
\- Not available

TABLE 9 PARTIAL TEST RESULTS, EFFECTS OF IRRADIATION, ALUMINUM 1099-H14 (TESTED AT 30°R)

Specimen	Irradiation (nvt, E>0.5 Mev)	F_{tu} (Ksi)	F_{ty} (Ksi)	$\frac{F_{ty}}{F_{tu}}$	Elongation (%)	Reduction of Area (%)	Fracture Stress (Ksi)	Modulus(#) (10^3 Ksi)
Mean of 14 (c)	None	37.25	12.00	0.319	57.9	65.4	92.6	10
8 Ba 147	5×10^{15}	44.9	19.8	0.44	56	63	94	12
**	5×10^{15}							
**	5×10^{15}							
Mean								
8 Ba 153	7×10^{15}	38.3	17.4	0.45	55	67	81	10
8 Ba 131 (b)	4×10^{16}	50.0	28.9	0.58	42	50	85	19
8 Ba 155 (b)	5×10^{16}	46.9	31.3	0.67	45	56	80	15
8 Ba 113	5×10^{16}	50.9	34.7	0.68	40	47	81	17
**	5×10^{16}							
Mean								
8 Ba 87 (a)	1×10^{17}	49.2	43.3	0.88	46	54	87	-
8 Ba 97 (b)	1×10^{17}	56.3	35.2	0.62	30	60	98	12
8 Ba 117 (b)	1×10^{17}	52.7	43.1	0.82	31	51	86	14
8 Ba 132 (b)	1×10^{17}	50.8	38.5	0.76	35	53	77	12
Mean	1×10^{17}	52.25	40.02	0.770	35.5	54.5	87.0	13
8 Ba 96 (b)	3×10^{17}	55.8	48.2	0.86	19	27	67	12
8 Ba 146 (b)	3×10^{17}	62.4	55.1	0.88	26	40	81	17
8 Ba 157 (b)	3×10^{17}	51.3	45.3	0.88	27	48	69	9
Mean	3×10^{17}	56.50	49.53	0.873	24.0	38.3	72.3	13

(a) From screening program (ref. 1)
(b) Previously reported (ref. 6)
(c) From table 8

(#) For comparison purposes only
** To be tested
- Not determinable

TABLE 10 PARTIAL TEST RESULTS, EFFECTS OF IRRADIATION TEMPERATURE, ALUMINUM 1099-H14 (1×10^{17} nvt, E>0.5 Mev, TESTED AT IRRADIATION TEMPERATURE)

Specimen	Temp. (°R)	F_{tu} (Ksi)	F_{ty} (Ksi)	F_{ty}/F_{tu}	Elongation (%)	Reduction of Area (%)	Fracture Stress (Ksi)	Modulus (#) (10^3 Ksi)
Mean of 4 (c)	30	52.2	40.0	0.770	35.5	54.5	87.0	13
**	140							
**	140							
**	140							
Mean								
8 Ba 135	320	16.2	14.6	0.90	27	79	21	5
8 Ba 145	320	17.2	16.3	0.95	28	78	-	9
8 Ba 156	320	14.5	12.8	0.88	28	78	35	10
Mean	320	15.97	14.57	0.910	27.7	78.3	28.0	8
**	540							
**	540							
**	540							
Mean								

(c) From table 9

(#) For comparison purposes only
** To be tested
- Not determinable

TABLE 11 PARTIAL TEST RESULTS, EFFECTS OF ANNEALING AND TEST TEMPERATURE, ALUMINUM 1099-H14 (1×10^{17}nvt, E>0.5 MEV, AT 30°R, ANNEALED AND TESTED AT INDICATED TEMPERATURE)

Specimen	Annealing and Test Temp. (°R)	F_{tu} (Ksi)	F_{ty} (Ksi)	F_{ty}/F_{tu}	Elongation (%)	Reduction of Area (%)	Fracture Stress (Ksi)	Modulus (#) (10^3 Ksi)
8 Ba 126 (b)	140	28.7	22.8	0.79	29	61	-	-
8 Ba 121	140	26.7	20.4	0.76	39	76	37	16
**	140							
Mean								
8 Ba 106	320	16.6	15.9	0.96	29	85	-	14
**	320							
**	320							
Mean								
**	540							
**	540							
**	540							
Mean								

(b) Previously reported (ref. 6)

(#) For comparison purposes only
** To be tested
- Not determinable

TABLE 12 PARTIAL TEST RESULTS, EFFECTS OF ANNEALING, ALUMINUM 1099-H14
(1×10^{17} nvt, E>0.5 Mev, AT 30°R, ANNEALED AT INDICATED TEMPERATURE, TESTED AT 30°R)

Specimen	Annealing Temp. (°R)	F_{tu} (Ksi)	F_{ty} (Ksi)	F_{ty}/F_{tu}	Elongation (%)	Reduction of Area (%)	Fracture Stress (Ksi)	Modulus (#) (10^3 Ksi)
Mean of 4 (c)	Not Annealed	52.2	40.0	0.770	35.5	54.5	87.0	13
8 Ba 140	140	45.2	28.9	0.64	39	53	64	14
**	140							
**	140							
Mean								
**	320							
**	320							
**	320							
Mean								
**	540							
**	540							
**	540							
Mean								

(c) From table 9

(#) For comparison purposes only
** To be tested
- Not determinable

TABLE 13 TEST RESULTS, TITANIUM 55A-ANNEALED[b]

Specimen	Temp. (°R)	Irradiation (nvt, E>0.5 Mev)	F_{tu} (Ksi)	F_{ty} (Ksi)	F_{ty}/F_{tu}	Elongation (%)	Reduction of Area (%)	Fracture Stress (Ksi)	Modulus[#] (10^3 Ksi)
Range of 5[a]	540	None	65.1-69.4	47.5-63.3	0.73-0.91	25-33	59-65	-	12-14
Mean of 5[a]	540	None	67.0	53.5	0.798	30.0	62.3	-	14
Range of 5[a]	30	None	167-172	118-124	0.71-0.73	33-34	51-54	-	16-20
Mean of 5[a]	30	None	169.4	122.0	0.722	33.3	53.0	-	18
Range of 3[a]	30	1×10^{17}	180-216	128-136	0.63-0.73	32-36	52-54	-	17-25
Mean of 3[a]	30	1×10^{17}	192.3	131.7	0.690	34.0	53.0	-	18
1 Aa 200	30	6×10^{17}	203	154	0.75	29	45	370	20
1 Aa 203	30	6×10^{17}	204	158	0.78	29	46	380	19
1 Aa 153	30	6×10^{17}	211	154	0.73	27	38	341	15
Mean	30	6×10^{17}	206.0	155.3	0.753	28.3	43.0	363.7	18
1 Aa 152	30	1×10^{18}	213	159	0.74	30	49	420	12
1 Aa 205	30	1×10^{18}	216	171	0.79	29	44	387	22
1 Aa 206	30	1×10^{18}	223	181	0.81	19	38	358	-
Mean	30	1×10^{18}	217.3	170.3	0.780	26.0	43.7	388.3	17

(a) From screening program (ref. 1)
(b) Previously reported (ref. 6)

(#) For comparison purposes only
\- Not determinable

TABLE 14 PARTIAL TEST RESULTS, TITANIUM-5Al-2.5 Sn (ELI)-ANNEALED

Specimen	Temp. (°R)	Irradiation (nvt, E>0.5 Mev)	F_{tu} (Ksi)	F_{ty} (Ksi)	F_{ty}/F_{tu}	Elongation (%)	Reduction of Area (%)	Fracture Stress (Ksi)	Modulus(#) (10^3 Ksi)
Range of 5(a)	540	None	118-133	104-119	0.88-0.91	12-19	39-46	169-171	15-20
Mean of 5(a)	540	None	126.4	113.4	0.896	16.0	42.2	170.0	15
Range of 5(a)	30	None	225-236	203-225	0.92-0.96	8-11	32-33	-	-
Mean of 5(a)	30	None	228.4	214.2	0.948	9.7	32.3	-	-
Range of 3(a)	30	1×10^{17}	222-225	211-215	0.95-0.96	11	31	-	17-18
Mean of 3(a)	30	1×10^{17}	223.3	213.0	0.953	11.0	31.0	-	18
8 Aa 49	30	1×10^{18}	268.0	262.1	0.98	6	22	-	22
8 Aa 55	30	1×10^{18}	270.9	263.1	0.97	6	25	359	23
**	30	1×10^{18}							
Mean									

(a) From screening program (ref. 1)

(#) For comparison purposes only

** To be tested

\- Not determinable

TABLE 15 TEST RESULTS, ALUMINUM 7178 - T651

Specimen	Temp. (°R)	Irradiation (nvt, E > 0.5 Mev)	F_{tu} (Ksi)	F_{ty} (Ksi)	F_{ty}/F_{tu}	Elongation (%)	Reduction of Area (%)	Fracture Stress (Ksi)	Modulus(#) (10^3 Ksi)
10 Ba 100	540	None	93.0	86.4	0.93	10	17	112	12
10 Ba 101	540	None	91.6	85.1	0.93	11	19	109	11
10 Ba 102	540	None	91.8	85.2	0.93	11	18	110	11
10 Ba 103	540	None	91.0	83.8	0.92	11	19	110	12
10 Ba 104	540	None	91.9	85.4	0.93	12	18	111	11
Mean	540	None	91.86	85.18	0.928	11.0	18.2	110.4	11
10 Ba 105	140	None	110.5	101.8	0.92	9	12	126	11
10 Ba 106	140	None	108.6	99.8	0.92	9	11	122	11
10 Ba 107	140	None	112.9	104.9	0.93	10	12	128	12
10 Ba 108	140	None	110.0	101.3	0.92	9	11	124	9
10 Ba 110	140	None	110.8	102.8	0.93	9	8	120	12
Mean	140	None	110.56	102.12	0.924	9.2	10.8	124.0	11

(#) For comparison purposes only

TABLE 16 TEST RESULTS, TITANIUM 55A - ANNEALED

Specimen	Temp. (°R)	Irradiation (nvt, E > 0.5 Mev)	F_{tu} (Ksi)	F_{ty} (Ksi)	F_{ty}/F_{tu}	Elongation (%)	Reduction of Area (%)	Fracture Stress (Ksi)	Modulus(#) (10^3 Ksi)
1 Aa 213 *	540	None	68.9	56.3	0.82	28	60	130	17
1 Aa 214 *	540	None	69.9	56.0	0.80	25	58	126	20
1 Aa 215 *	540	None	69.6	55.7	0.80	26	59	126	18
1 Aa 218 *	540	None	69.9	56.6	0.81	26	56	122	19
1 Aa 219 *	540	None	69.8	55.9	0.80	27	59	129	18
Mean	540	None	69.62	56.10	0.806	26.4	58.4	126.6	18
1 Aa 202	140	None	135.6	102.8	0.76	48	68	320	16
1 Aa 207 *	140	None	135.6	98.4	0.73	46	68	317	19
1 Aa 208 *	140	None	135.4	99.6	0.74	47	67	310	20
1 Aa 209 *	140	None	134.4	104.7	0.78	47	65	303	20
1 Aa 210 *	140	None	137.4	101.3	0.74	46	66	296	19
Mean	140	None	135.68	101.36	0.750	46.8	66.8	309.2	19

(#) For comparison purposes only

* From 1.0 inch diameter bar, otherwise same pedigree as given in tables 6 and 7

8

FIGURES

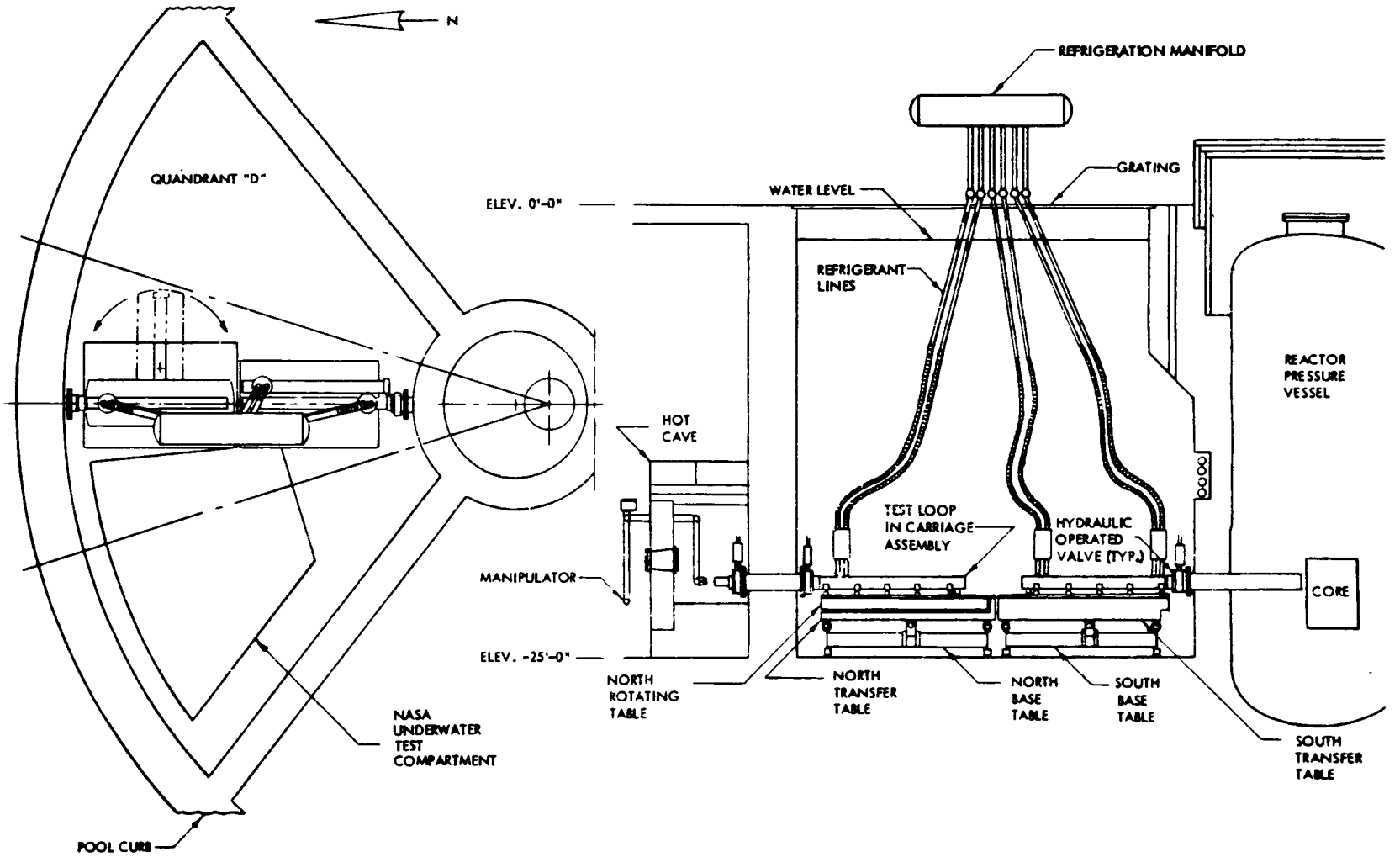

FIGURE 1 SYSTEM LAYOUT

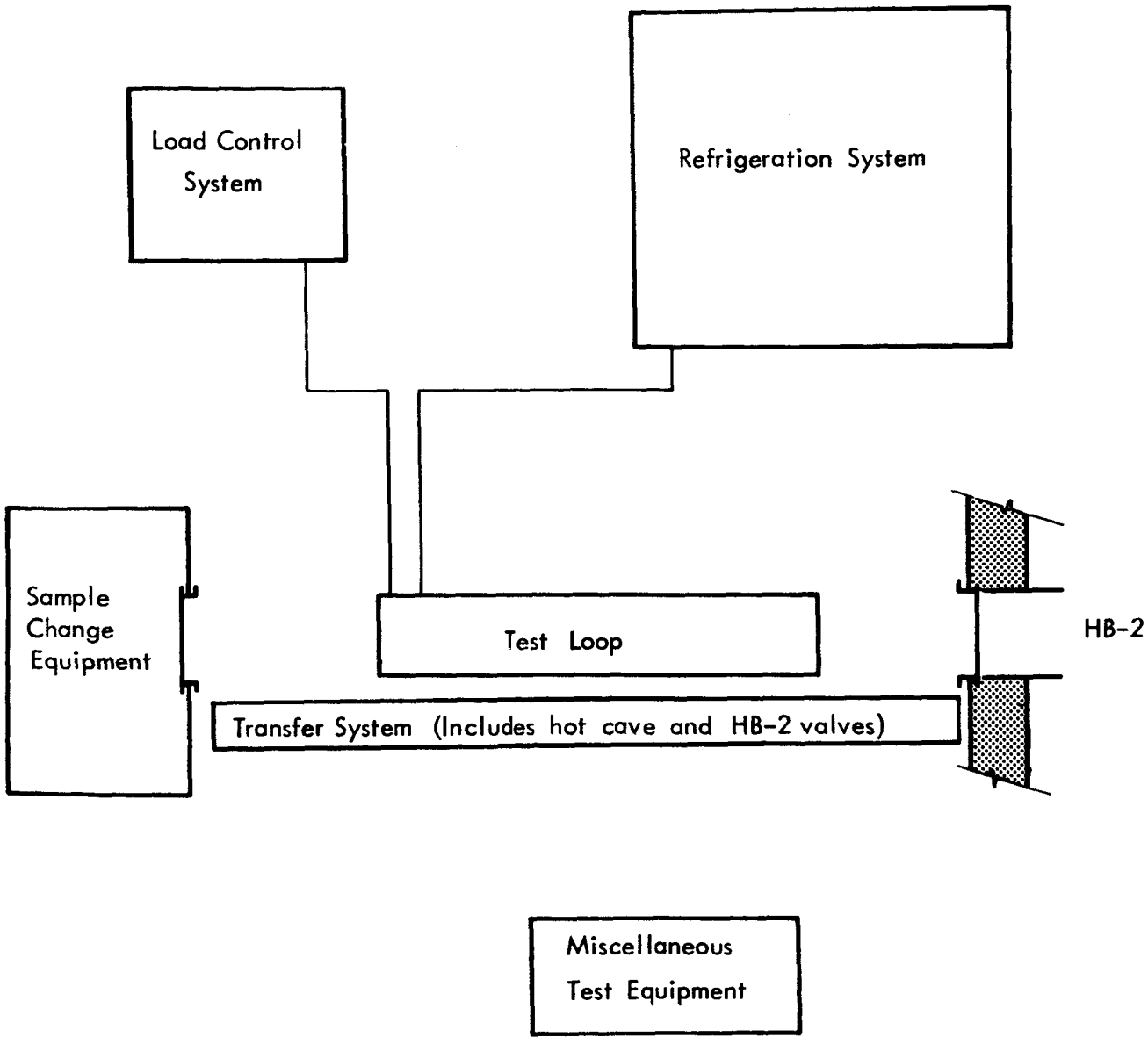

FIGURE 2 TEST EQUIPMENT (BLOCK DIAGRAM)

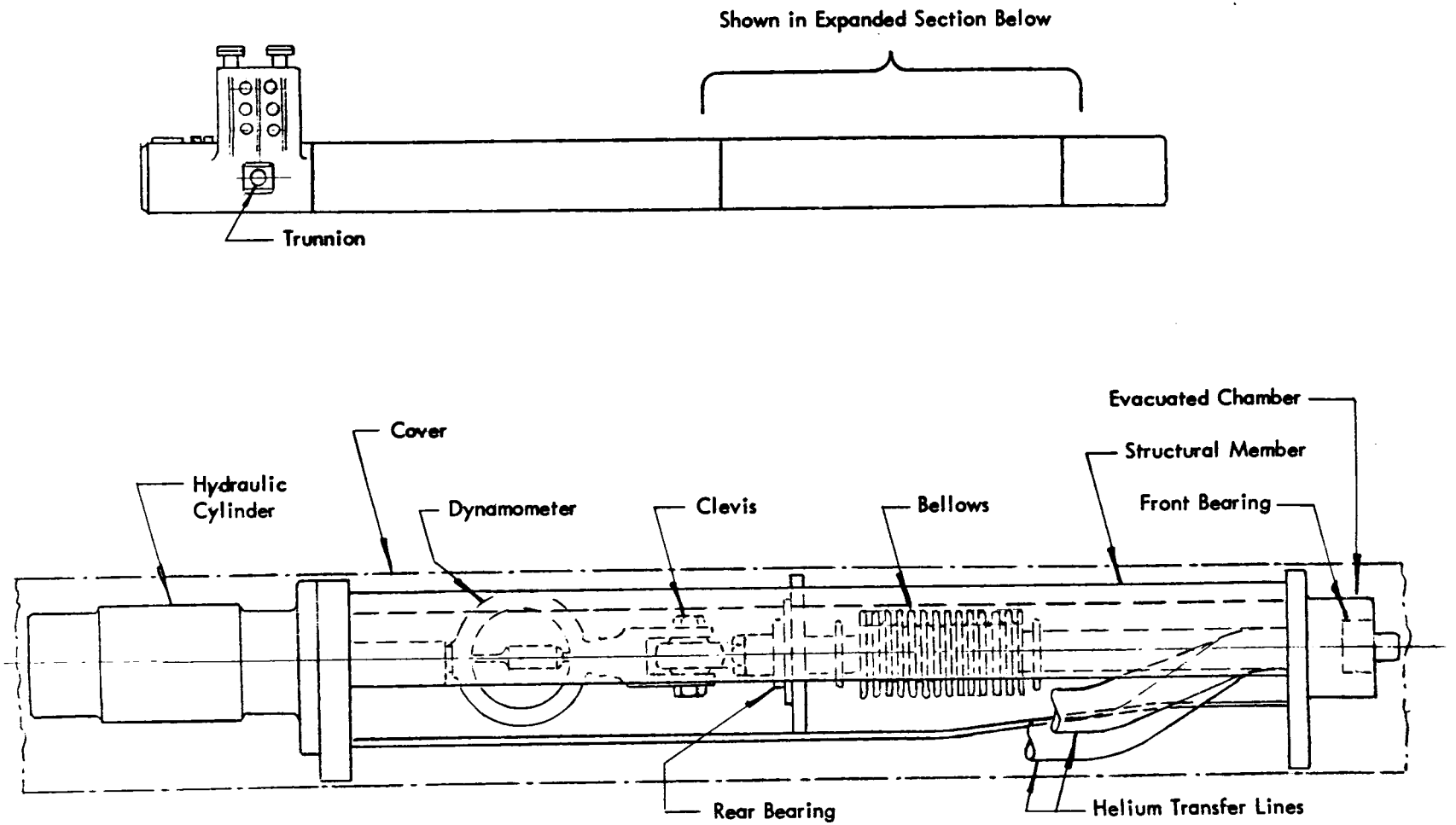

FIGURE 3 TENSILE TEST LOOP ASSEMBLY

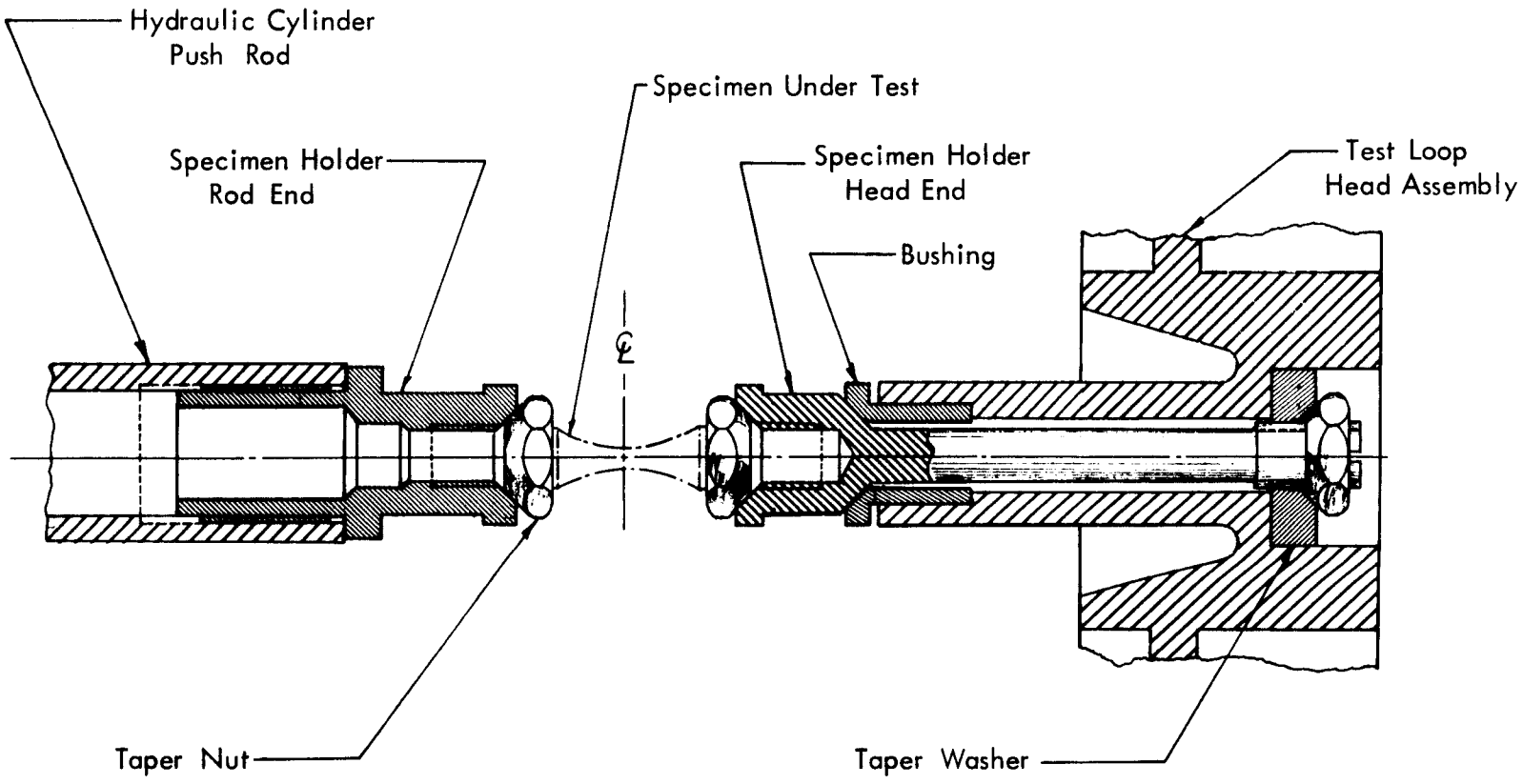

FIGURE 4 SPECIMEN HOLDER DESIGN

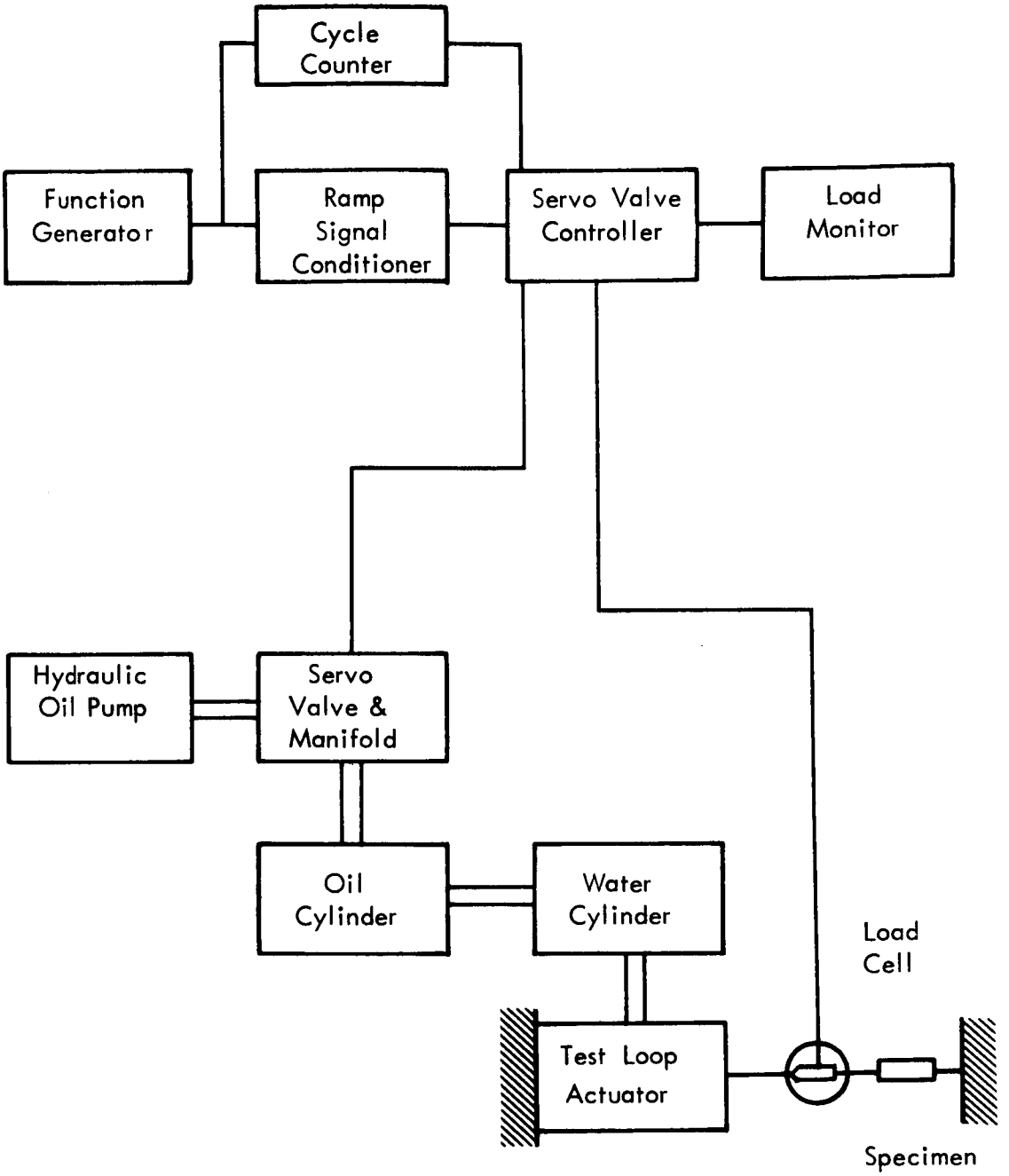

FIGURE 5 FATIGUE LOAD CONTROL SYSTEM (BLOCK DIAGRAM)

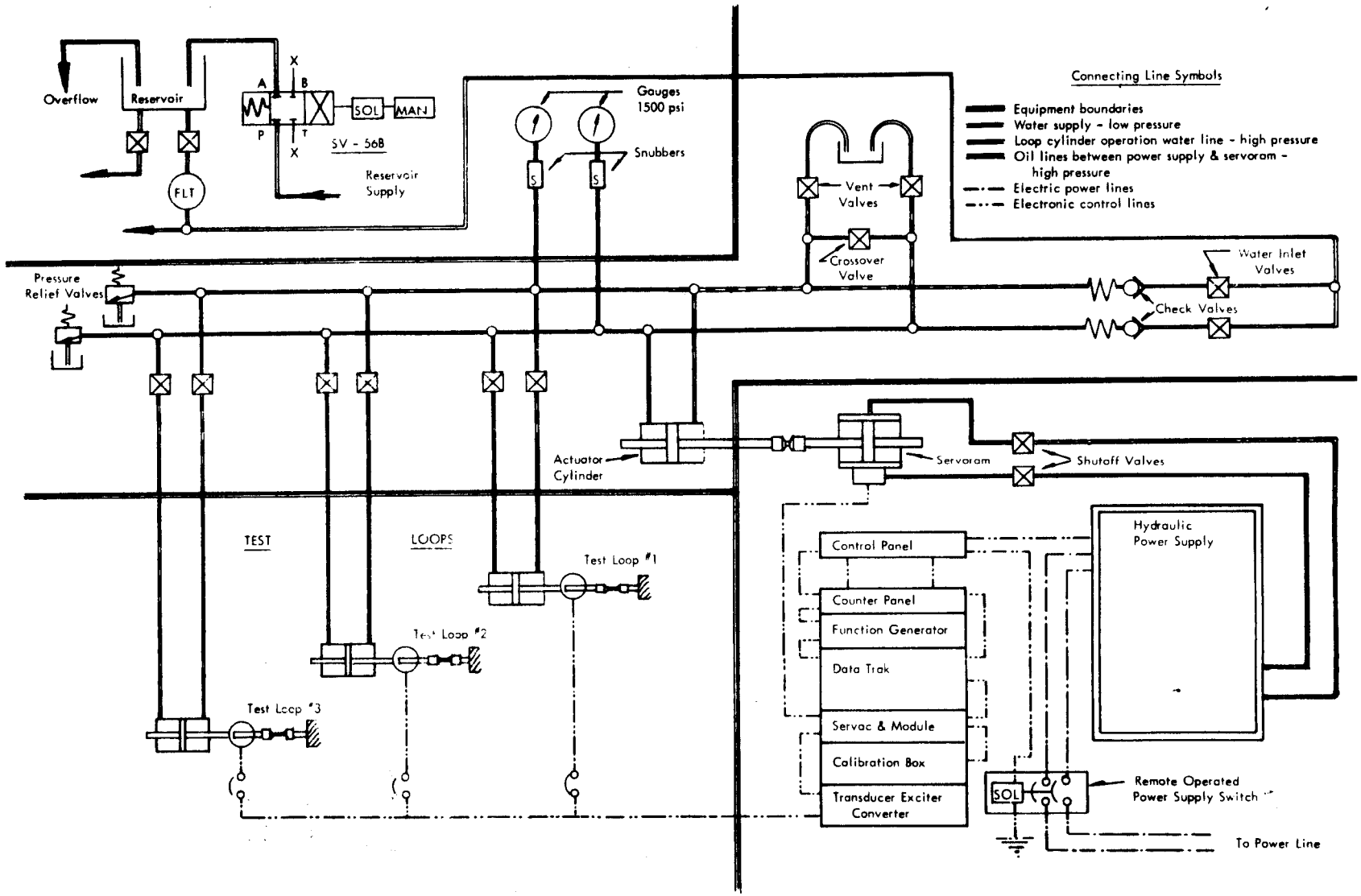

FIGURE 6 LOAD CONTROL SYSTEM (SCHEMATIC)

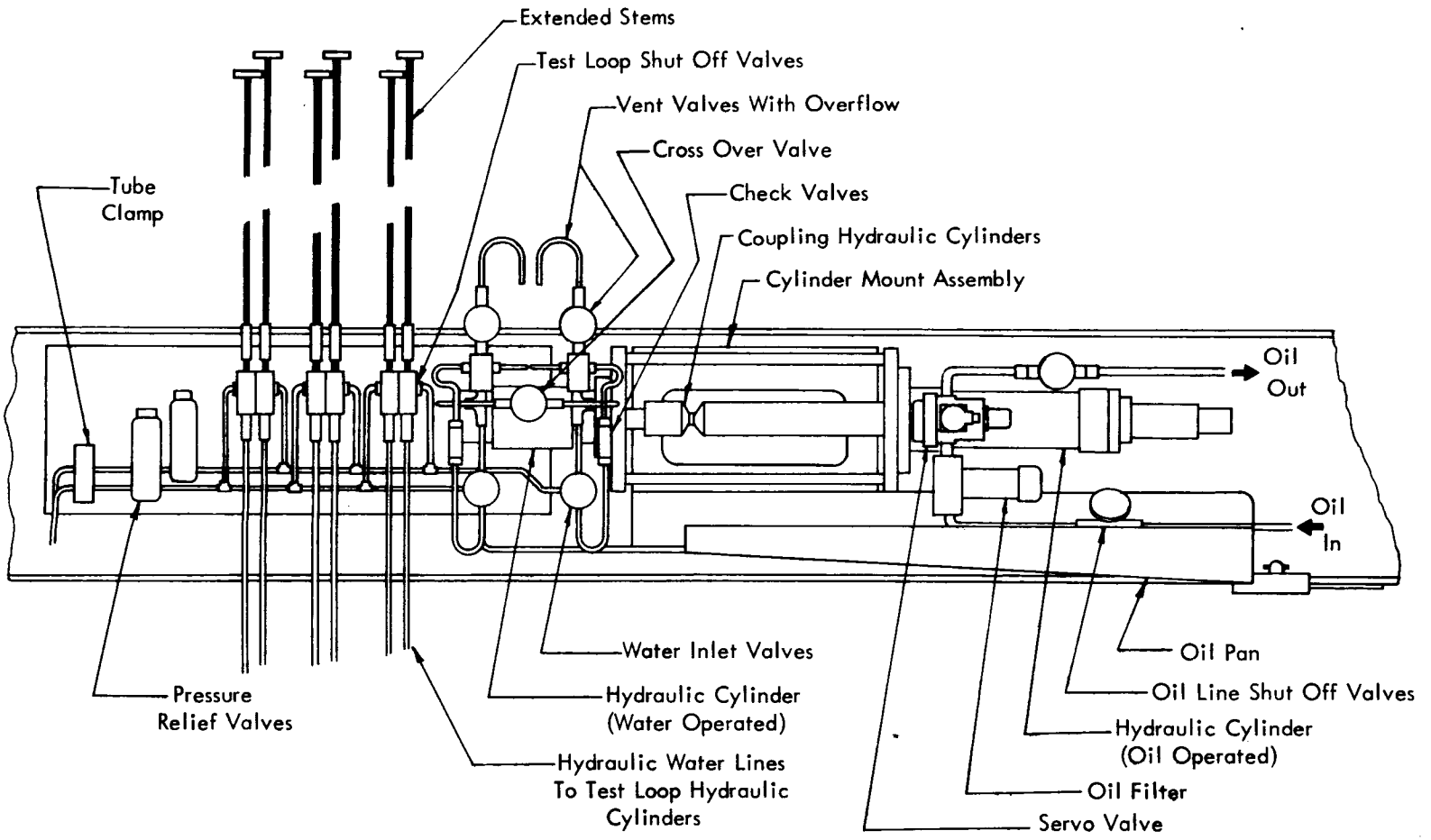

FIGURE 7 TEST LOOP ACTUATION CENTER

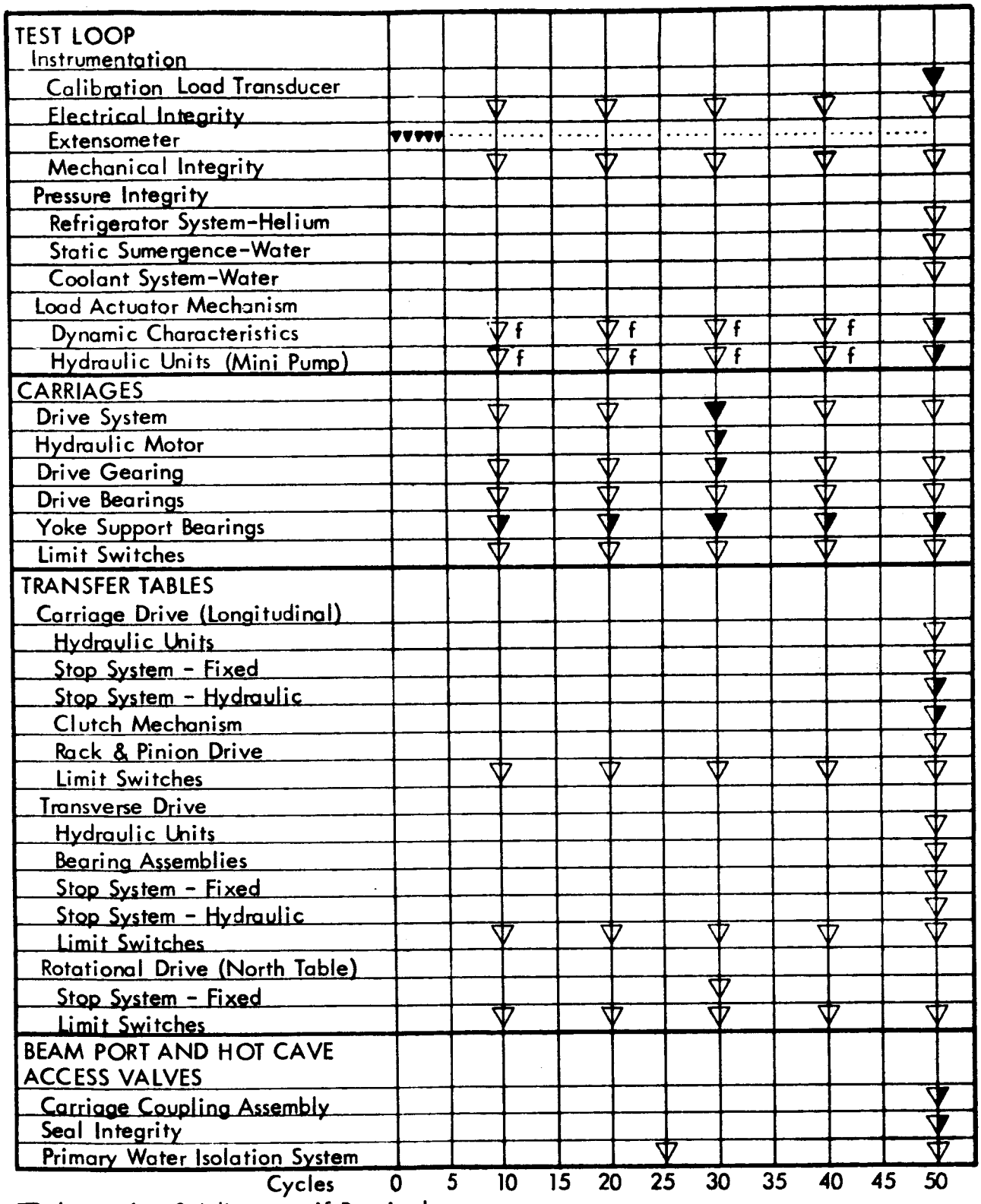

▽ Inspection & Adjustment if Required

▼ Disassembly and Inspection

▼ Replacement Overhaul

f . Fatigue Equipment

FIGURE 8 TEST FACILITY EQUIPMENT MAINTENANCE SCHEDULE

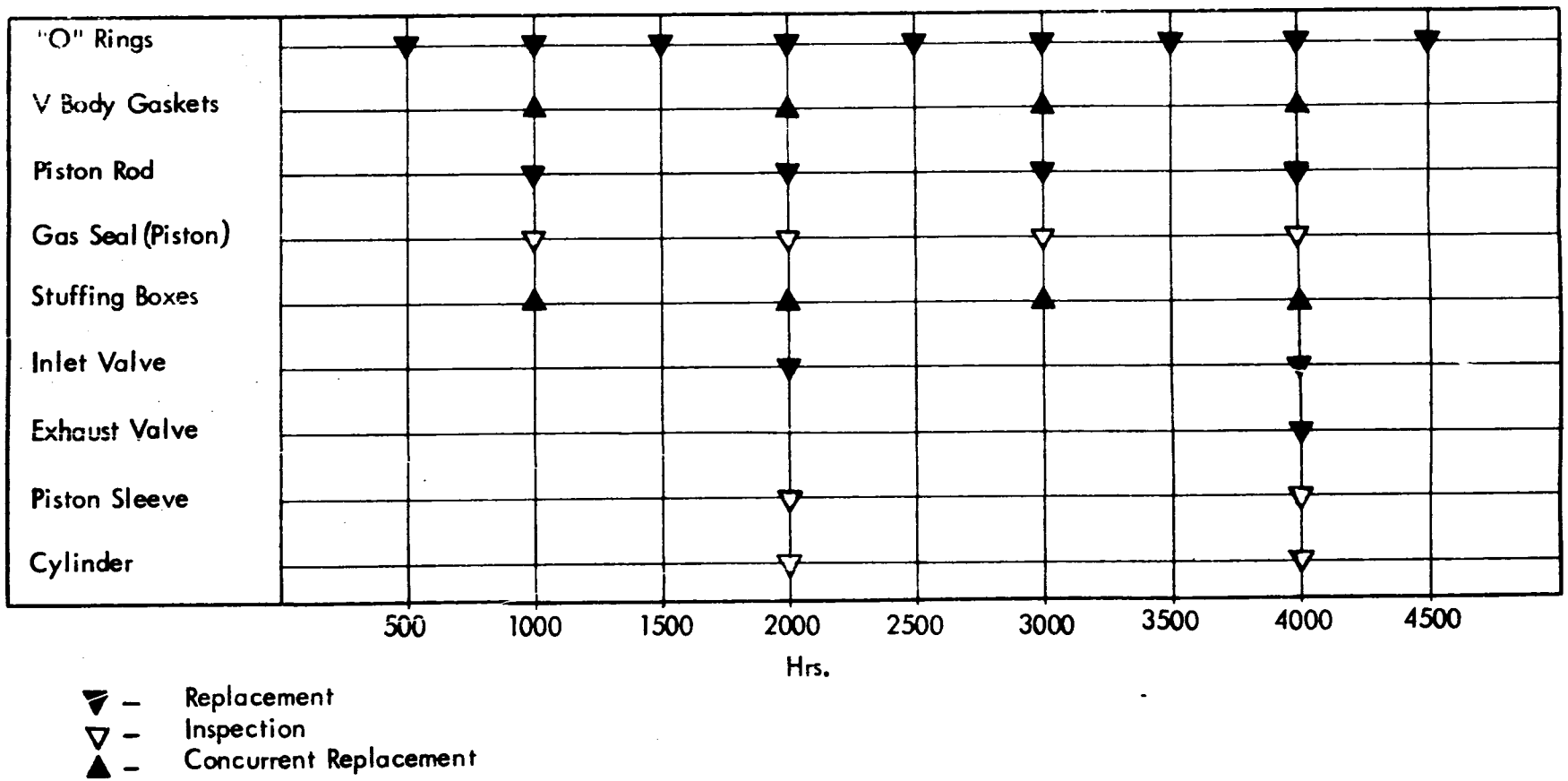

FIGURE 9 EXPANSION ENGINE MAINTENANCE SCHEDULE

TRANSFER SYSTEM CYCLE

LOOP NO. _____ CYCLES TO DATE _____

CARRIAGE NO. _____ CYCLES TO DATE _____

REACTOR CYCLE NO. _____

HOT CAVE INSERTION CHECK LIST

DATE _____ TIME _____

"Reactor-Hot Cave" Switch in Hot Cave Position	☐	initial
"Master-Hot Cave" Switch in Master Position	☐	initial
Hot cave valve in quadrant open (visual inspection)	☐	initial
Communication between operators	☐	initial
"Master-Hot Cave" Switch changed to "Hot-Cave" position	☐	initial
Hot cave valve open - Verified	☐	initial
Insertion Complete	☐	initial
"Master-Hot Cave" switch returned to "Master" position	☐	initial

HOT CAVE REMOVAL CHECK LIST

DATE _____ TIME _____

Communication between operators	☐	initial
"Master-Hot Cave" Switch in "Hot Cave" Position	☐	initial
"Reactor-Hot Cave" Switch in "Hot Cave" Position	☐	initial
Hot cave valve closed	☐	initial
"Master-Hot Cave" Switch changed to "Master" Position	☐	initial
Hot Cave valve in quadrant in "closed" position	☐	initial
Loop "normal rear" position	☐	initial

BEAM PORT INSERTION CHECK LIST

DATE _____ TIME _____

Track position with respect to beam port	☐	initial
Sample Temperature a. Inlet helium temperature °F b. Outlet helium temperature °F	☐	initial
Check dynamic hydraulic pressure high range (550 psig)	☐	initial
Manual test loop cooling water valves open	☐	initial
Test loop cooling water Flow Verify	☐	initial
Seal water flow on	☐	initial
Seal water pressure, psi	☐	initial
Beam port valve position	☐	initial
Test loop position (full forward)	☐	initial
Time Insertion Complete	☐	initial

BEAM PORT REMOVAL CHECK LIST

DATE _____ TIME _____

Manual test loop cooling water valves closed	☐	initial
"Seal" light off	☐	initial
Beam port valve closed	☐	initial
Test loop cooling water flow off	☐	initial
Seal Water flow off	☐	initial
Test loop position (normal rear)	☐	initial
Time Withdrawal Complete	☐	initial

REMARKS: _____

FIGURE 10 TRANSFER SYSTEM CYCLE OPERATION FORM

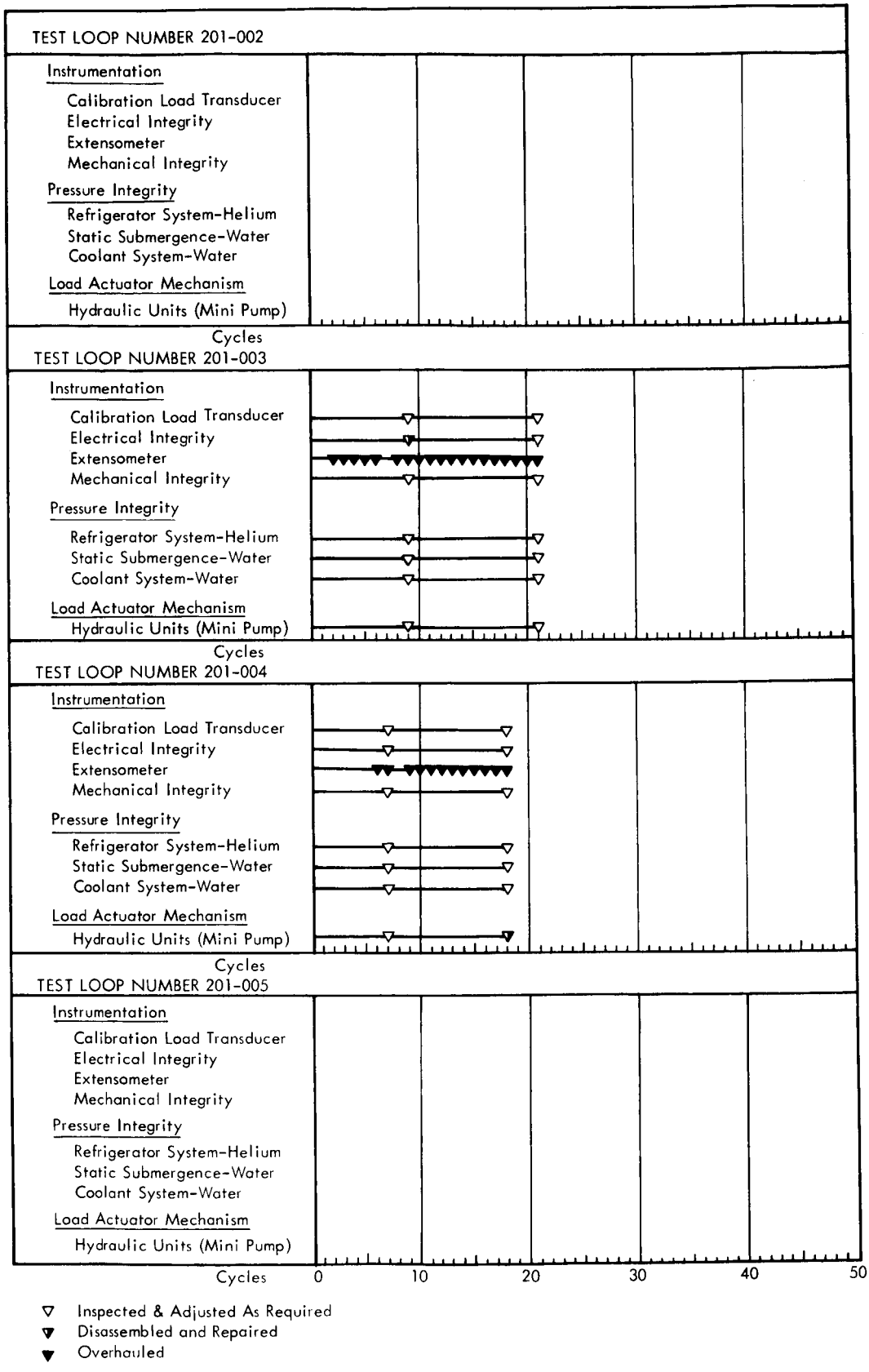

FIGURE 11 MAINTENANCE HISTORY - TEST LOOPS 201-002, 201-003, 201-004 AND 201-005

EXPANSION ENGINE NO. 1 - Total Operating Time When Overhauled 5363.5 Hours

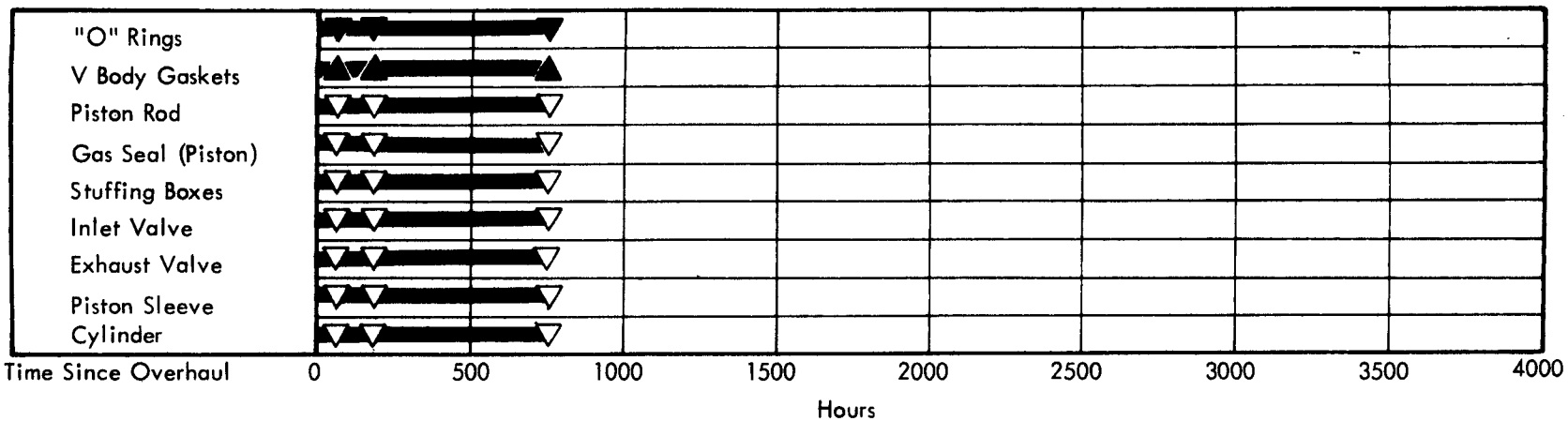

EXPANSION ENGINE NO. 2 - Total Operating Time When Overhauled 5275.3 Hours

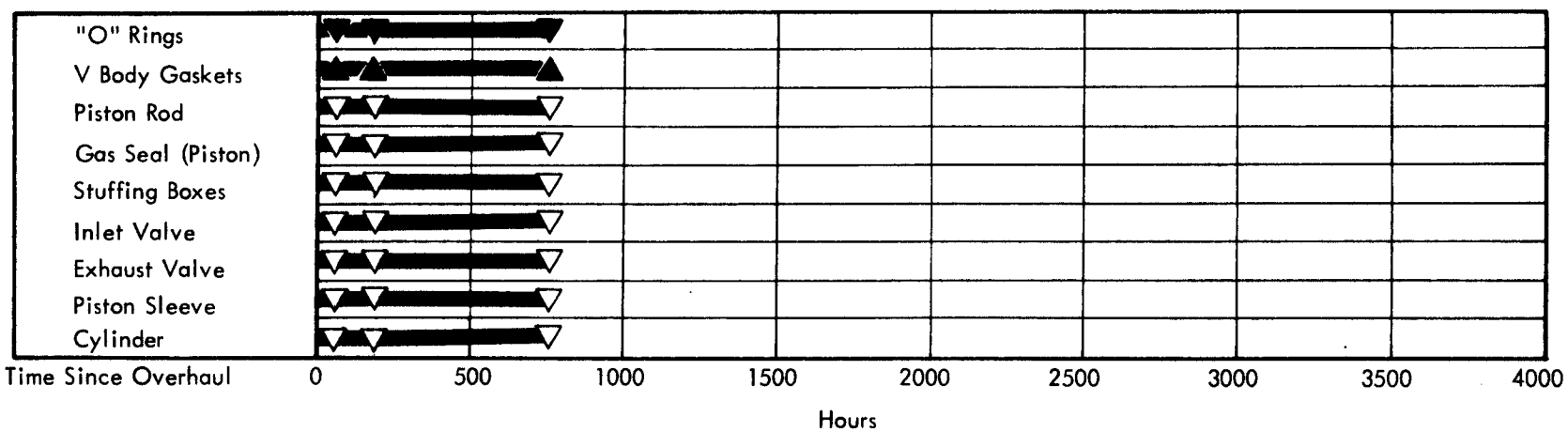

▼ Replaced
▽ Inspected
▲ Concurrently Replaced

FIGURE 12 MAINTENANCE HISTORY - EXPANSION ENGINES NO. 1 AND NO. 2

EXPANSION ENGINE NO. 3 - Total Operating Time When Overhauled 4163.0 Hours

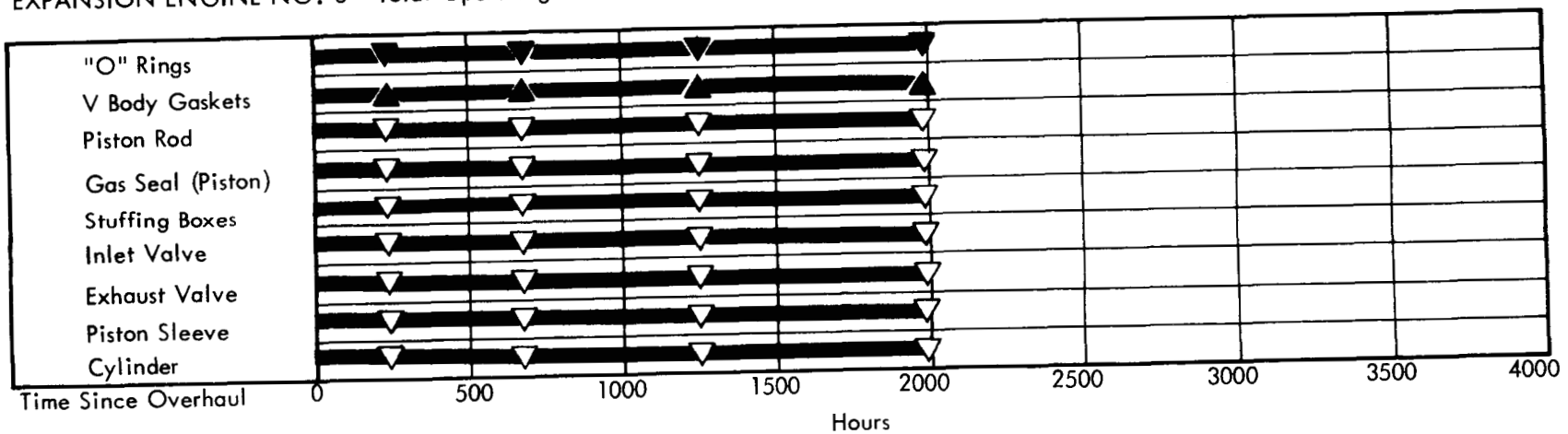

EXPANSION ENGINE NO. 4 - Total Operating Time When Overhauled 3508.4 Hours

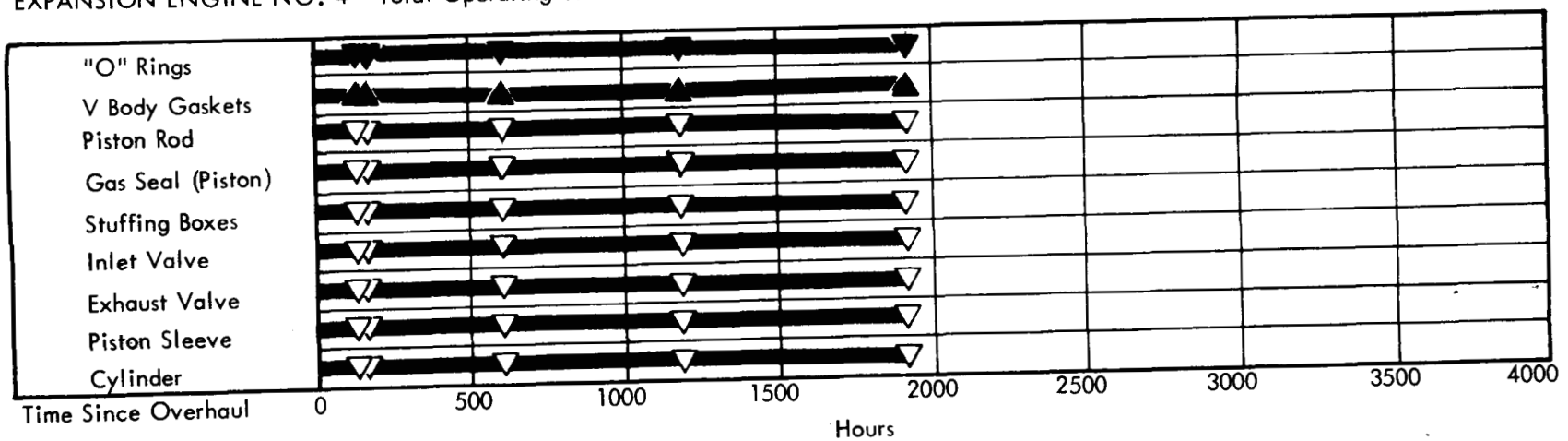

▼ Replaced
▽ Inspected
▲ Concurrently Replaced

FIGURE 13 MAINTENANCE HISTORY - EXPANSION ENGINES NO. 3 AND NO. 4

EXPANSION ENGINE NO. 5 - Total Operating Time When Overhauled 4389.5 Hours

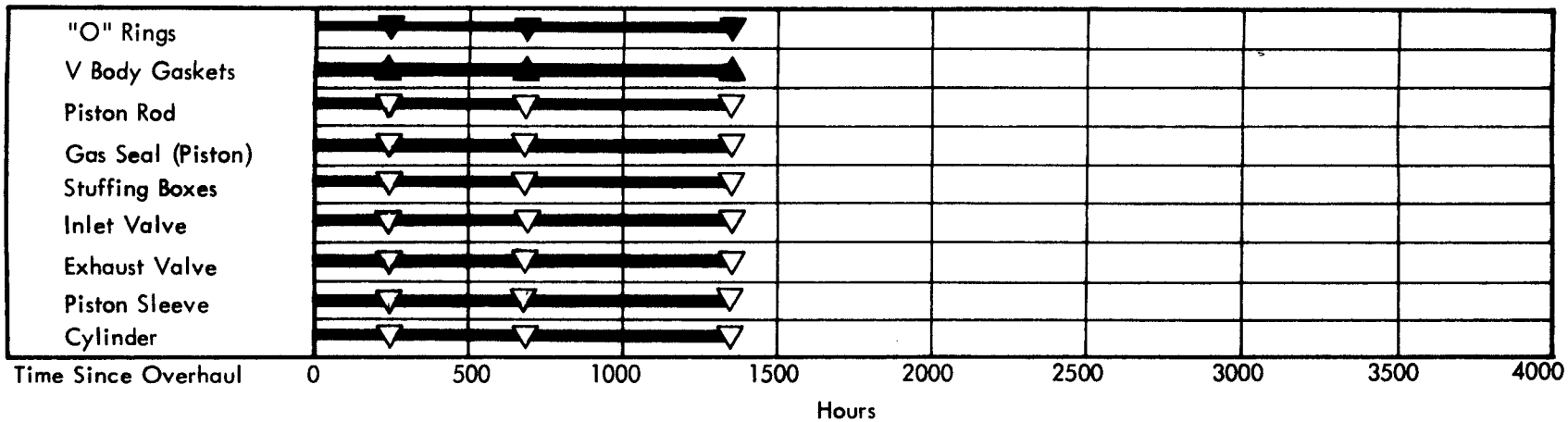

EXPANSION ENGINE NO. 6 - Total Operating Time When Overhauled 3272.1 Hours

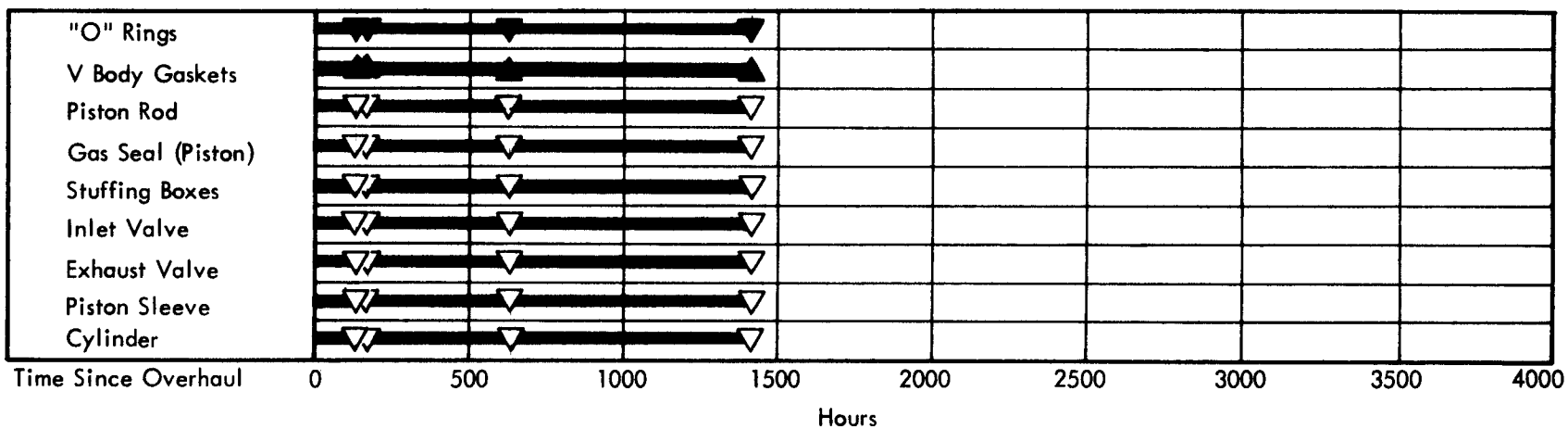

▼ Replaced
▽ Inspected
▲ Concurrently Replaced

FIGURE 14 MAINTENANCE HISTORY - EXPANSION ENGINES NO. 5 AND NO. 6

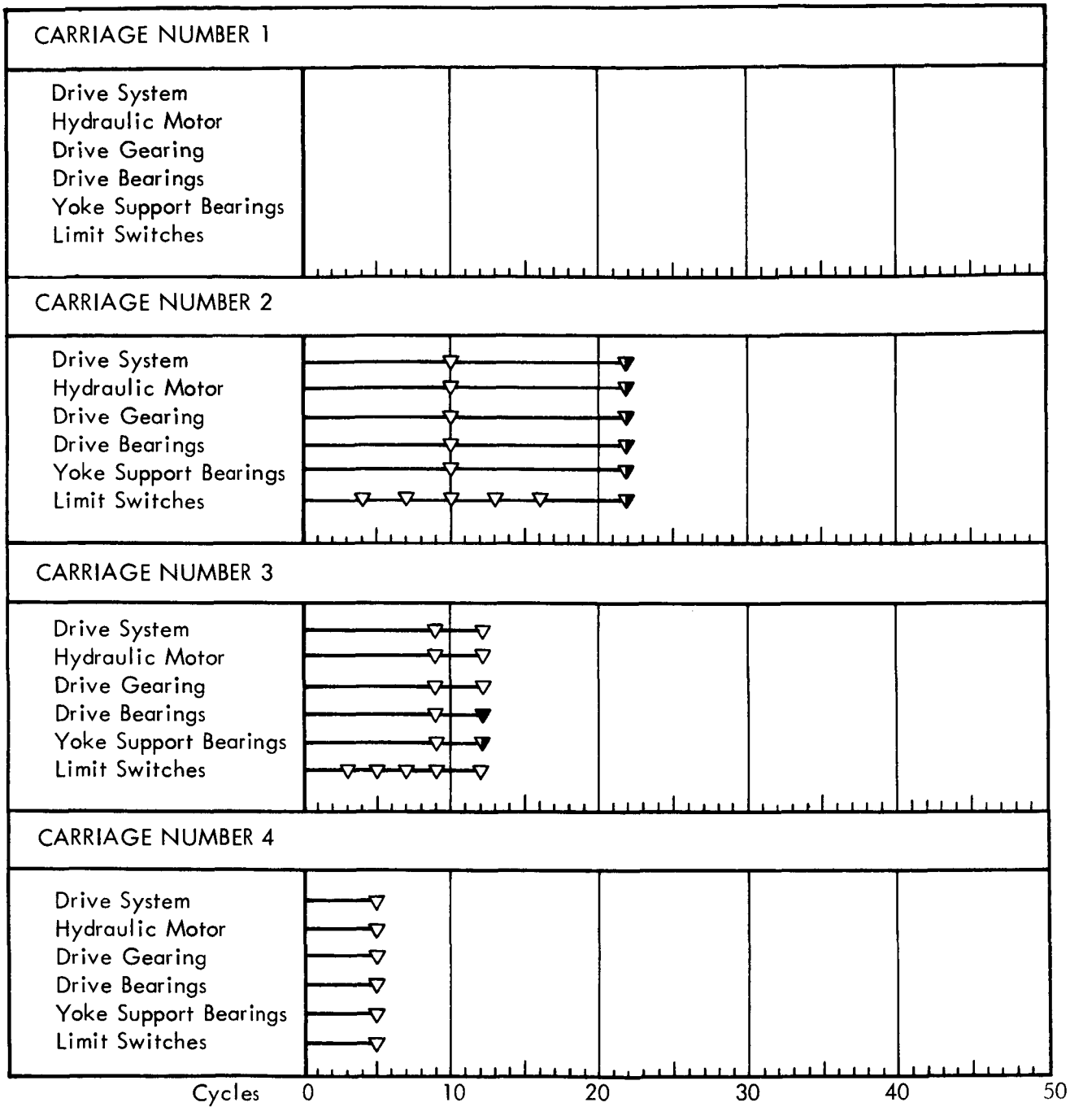

▽ Inspected & Adjusted As Required
▼ Disassembled and Repaired
▼ Overhauled

FIGURE 15 MAINTENANCE HISTORY - TEST LOOP CARRIAGES

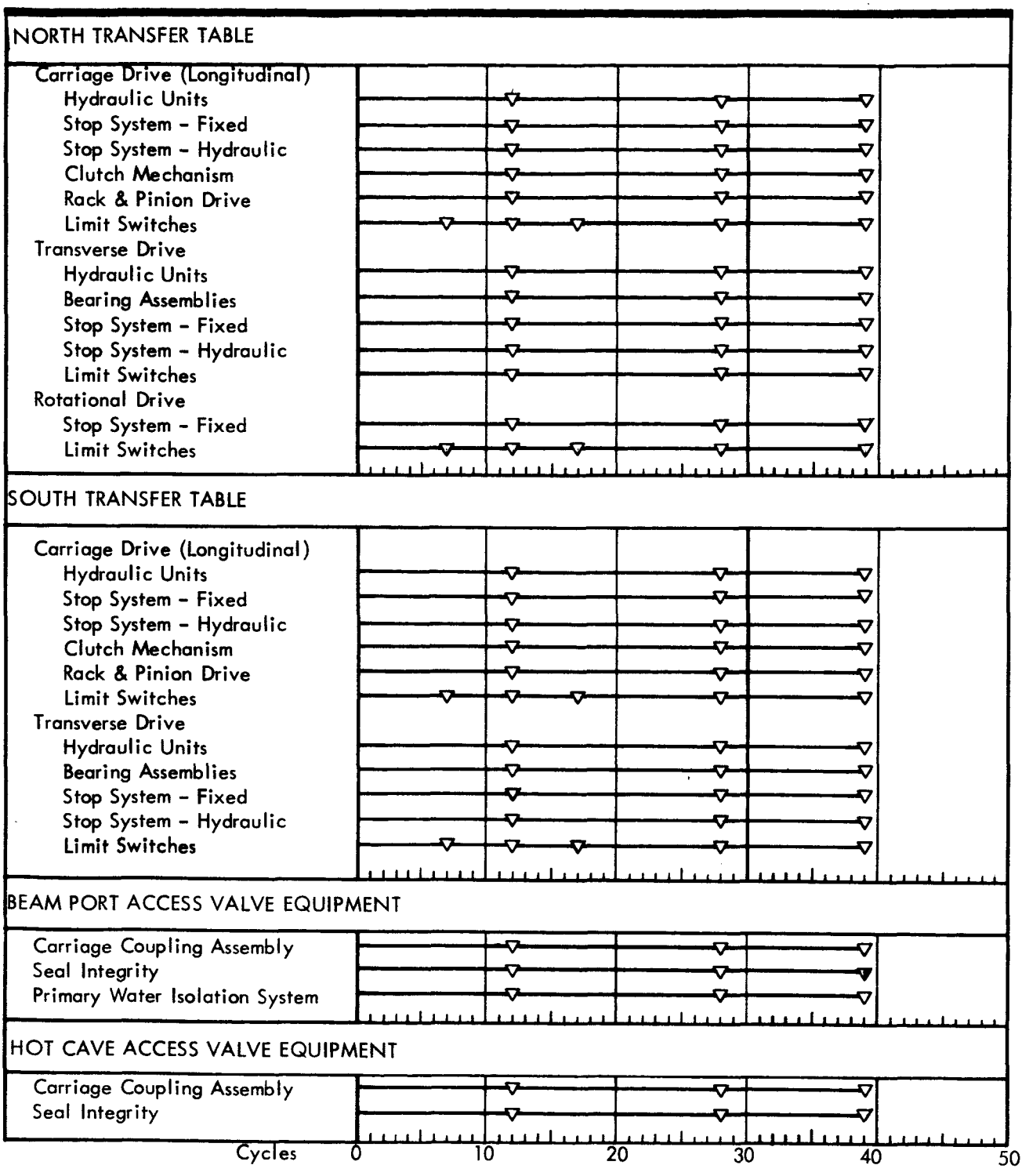

▽ Inspected & Adjusted As Required
▼ Disassembled and Repaired
▼ Overhauled

FIGURE 16 MAINTENANCE HISTORY - TRANSFER TABLES - BEAM PORT AND HOT CAVE ACCESS EQUIPMENT

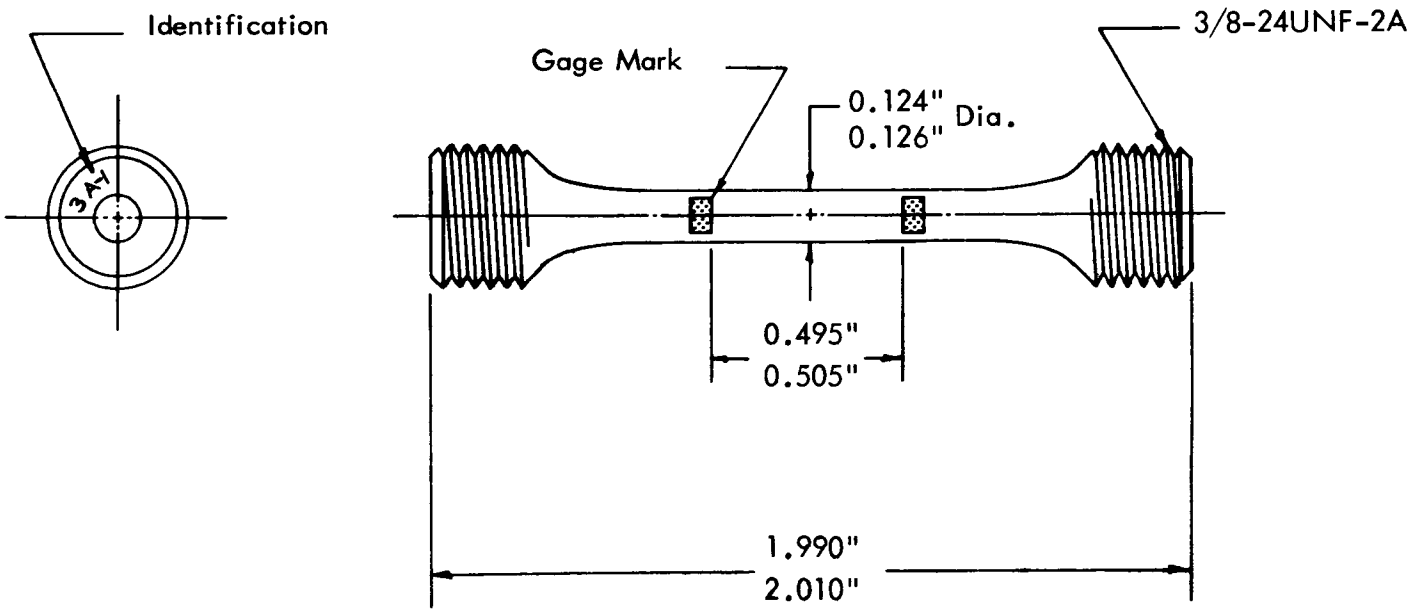

Note: Diameter at gage marks shall be center diameter + $\begin{matrix}0.002"\\0.004"\end{matrix}$.

FIGURE 17 TENSILE SPECIMEN

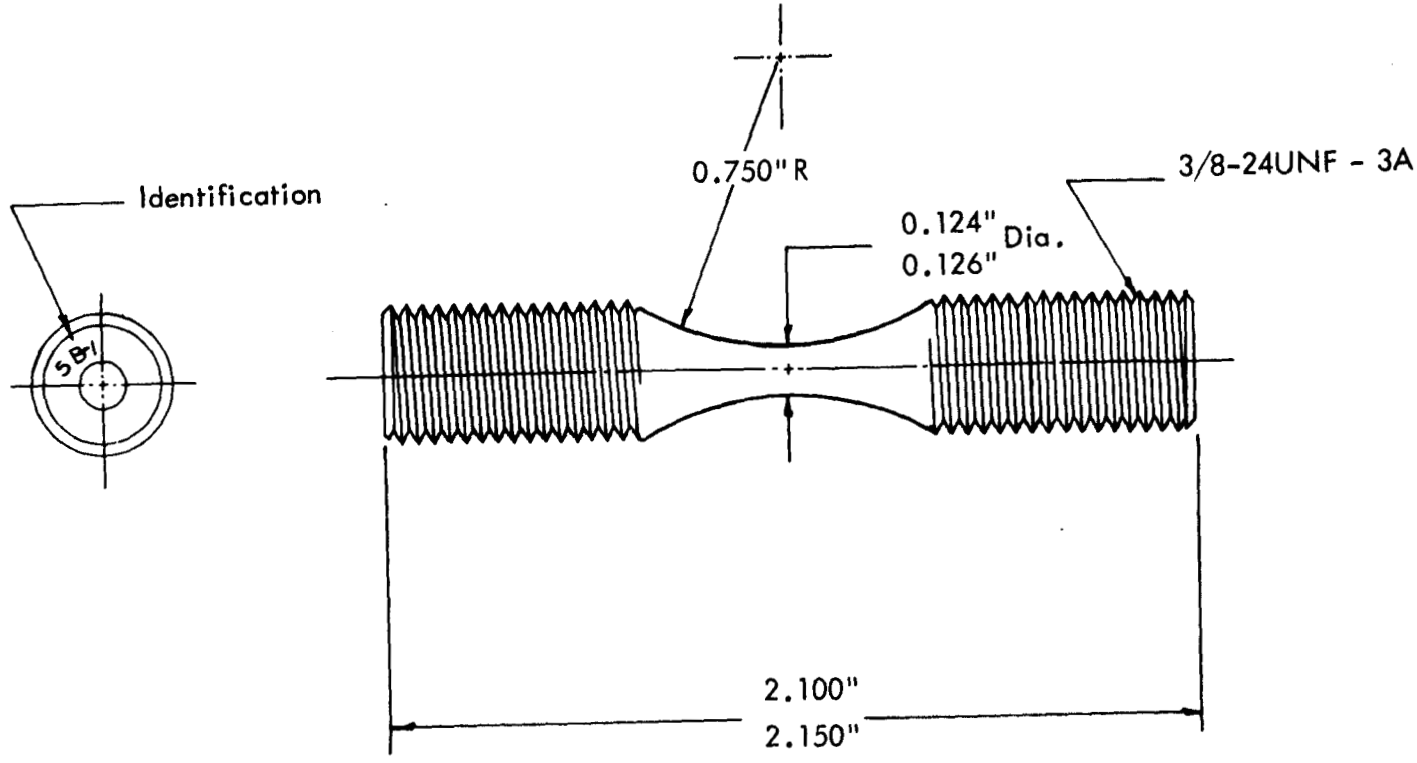

FIGURE 18 FATIGUE SPECIMEN

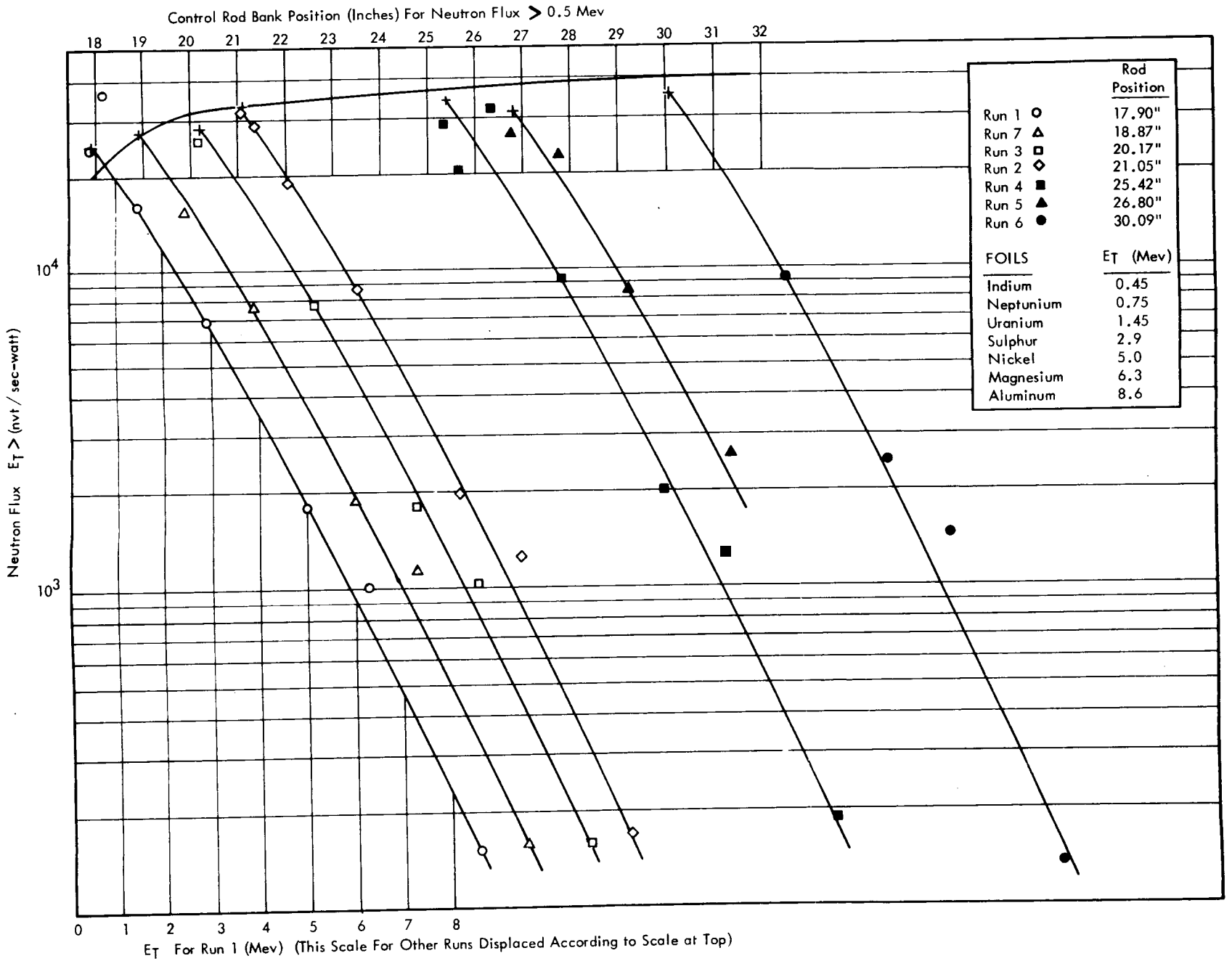

FIGURE 19 NEUTRON FLUX>E_T VS. E_T AND NEUTRON FLUX >0.5 MEV VS. CONTROL ROD BANK POSITION

FIGURE 20 ELECTRON FRACTOGRAPH OF FAILED FATIGUE SPECIMEN
18 Ni 300 MARAGING STEEL, 26.5 CYCLES AT 5 CPM, 270 KSI

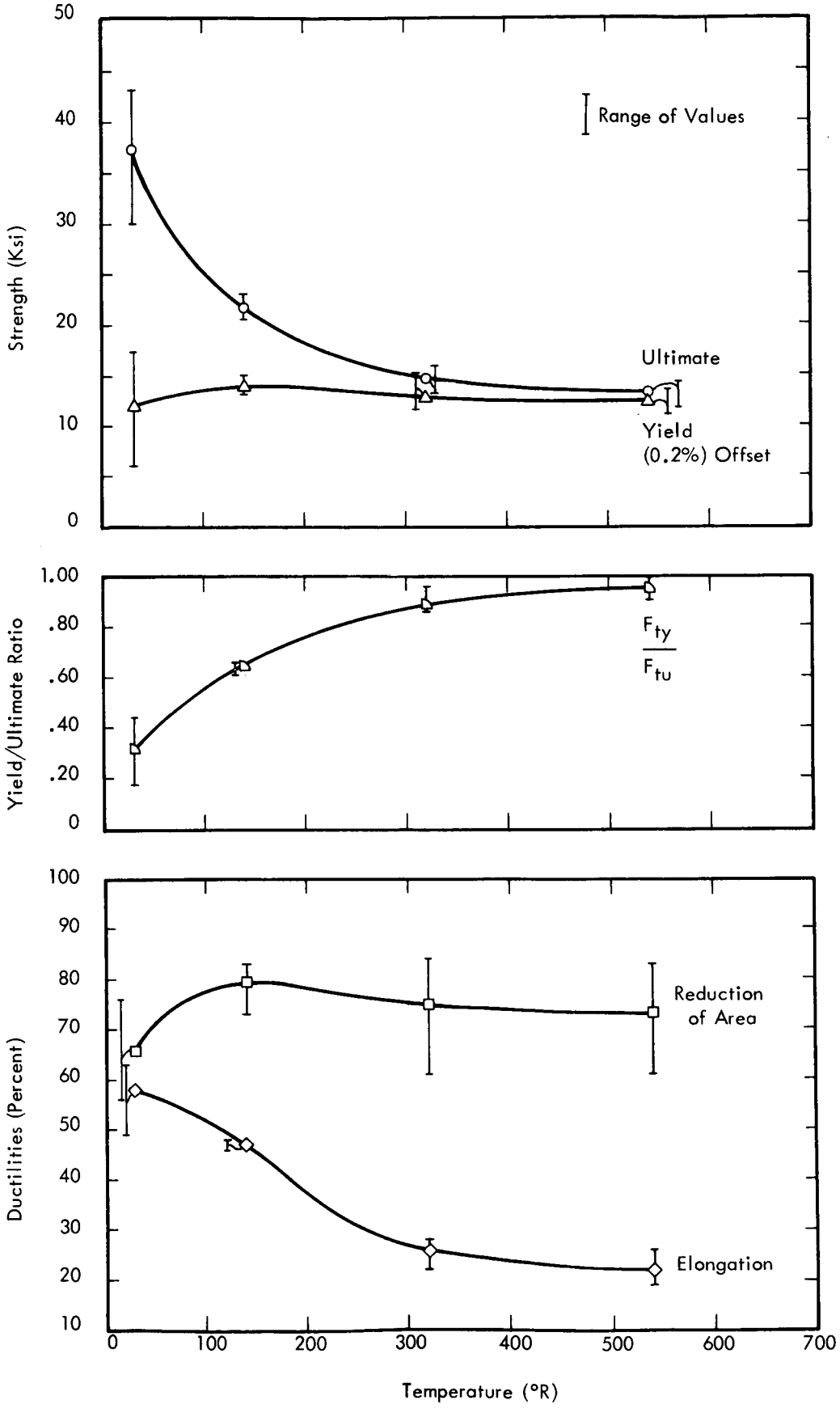

FIGURE 21 TEMPERATURE DEPENDENCE OF TENSILE PROPERTIES
ALUMINUM 1099-H14, UNIRRADIATED

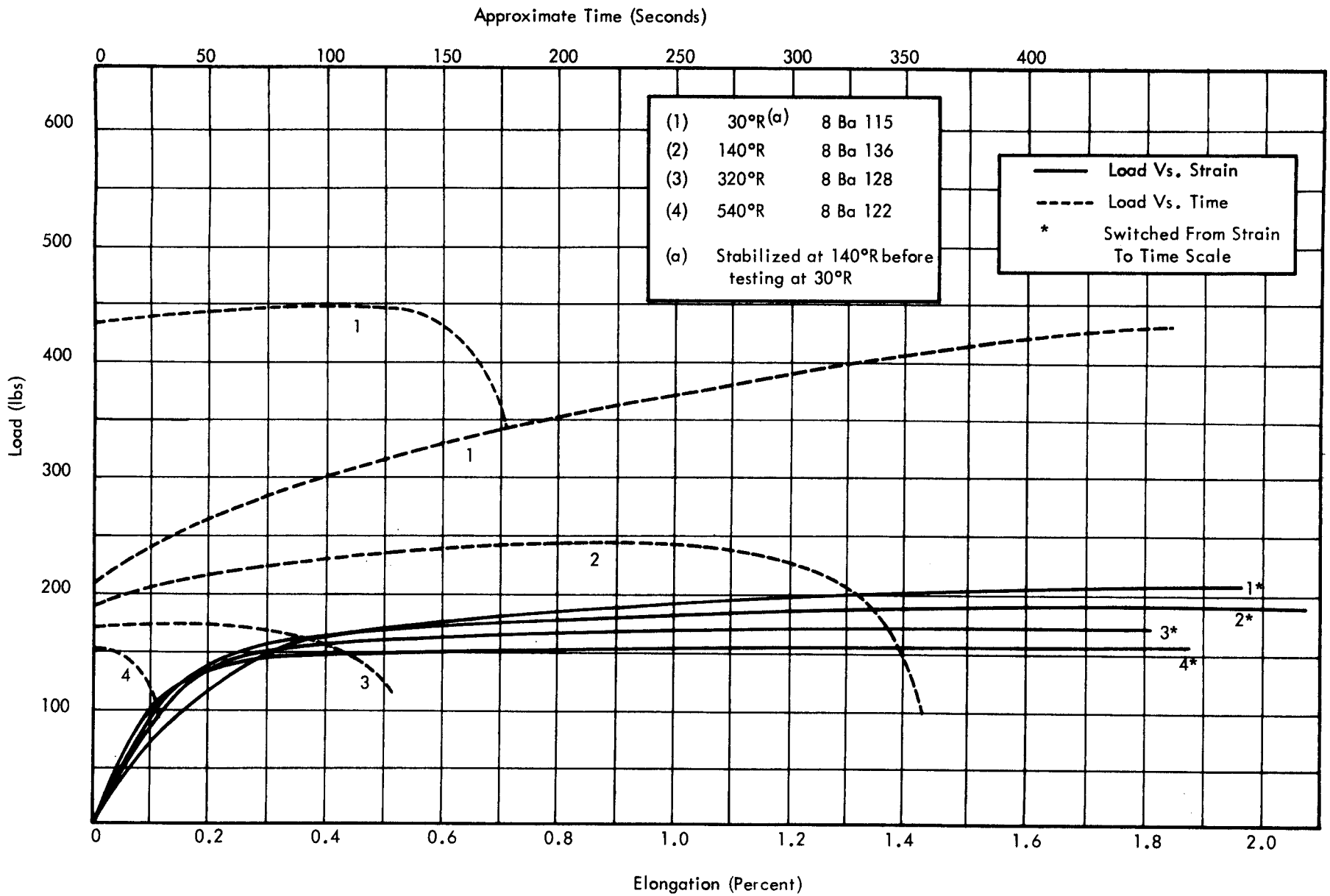

FIGURE 22 TYPICAL LOAD-ELONGATION CURVES, AT VARIOUS TEMPERATURES, FOR ALUMINUM 1099-H14, UNIRRADIATED

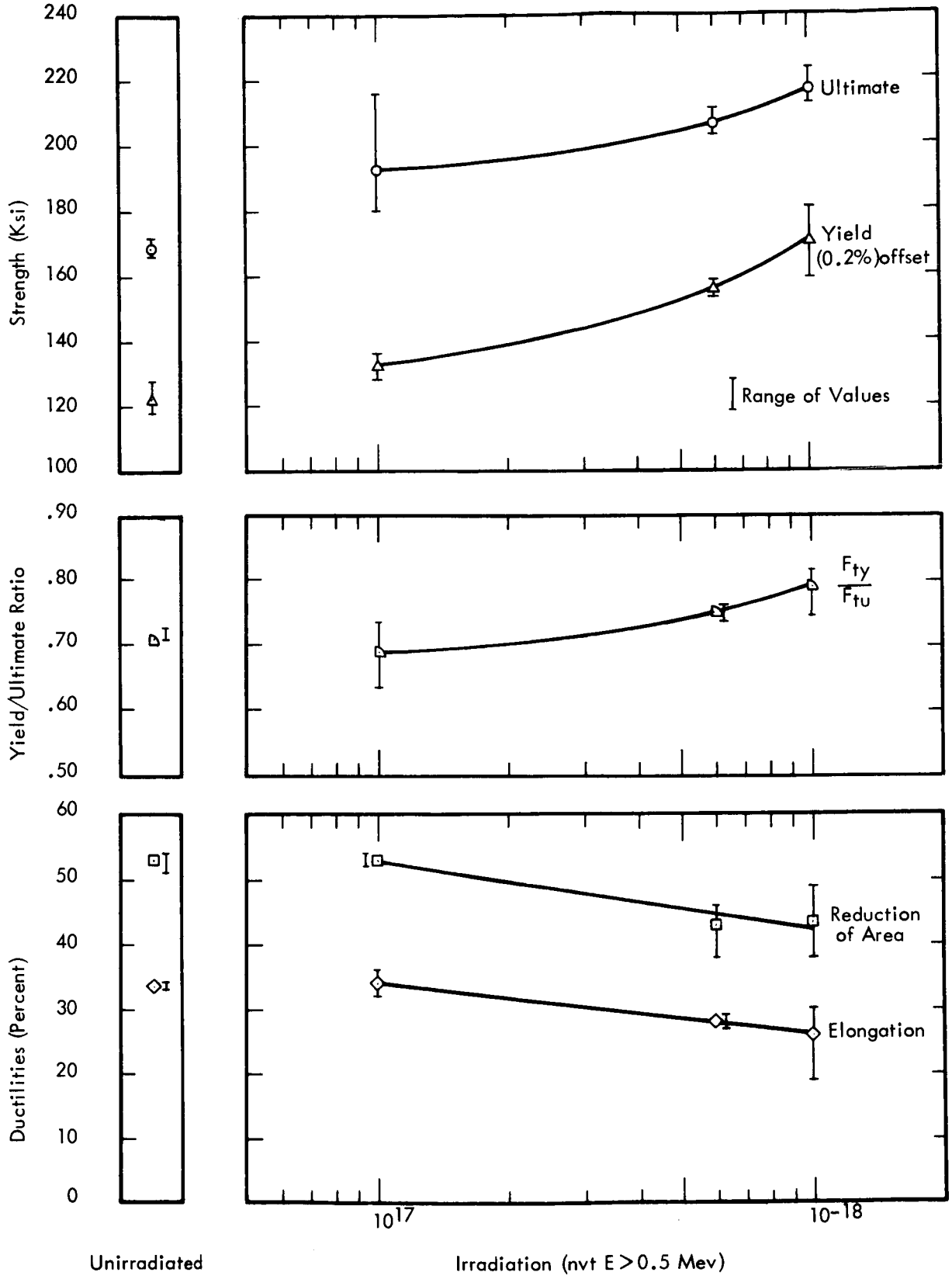

FIGURE 23 EFFECTS OF IRRADIATION AT 30°R ON TITANIUM 55A

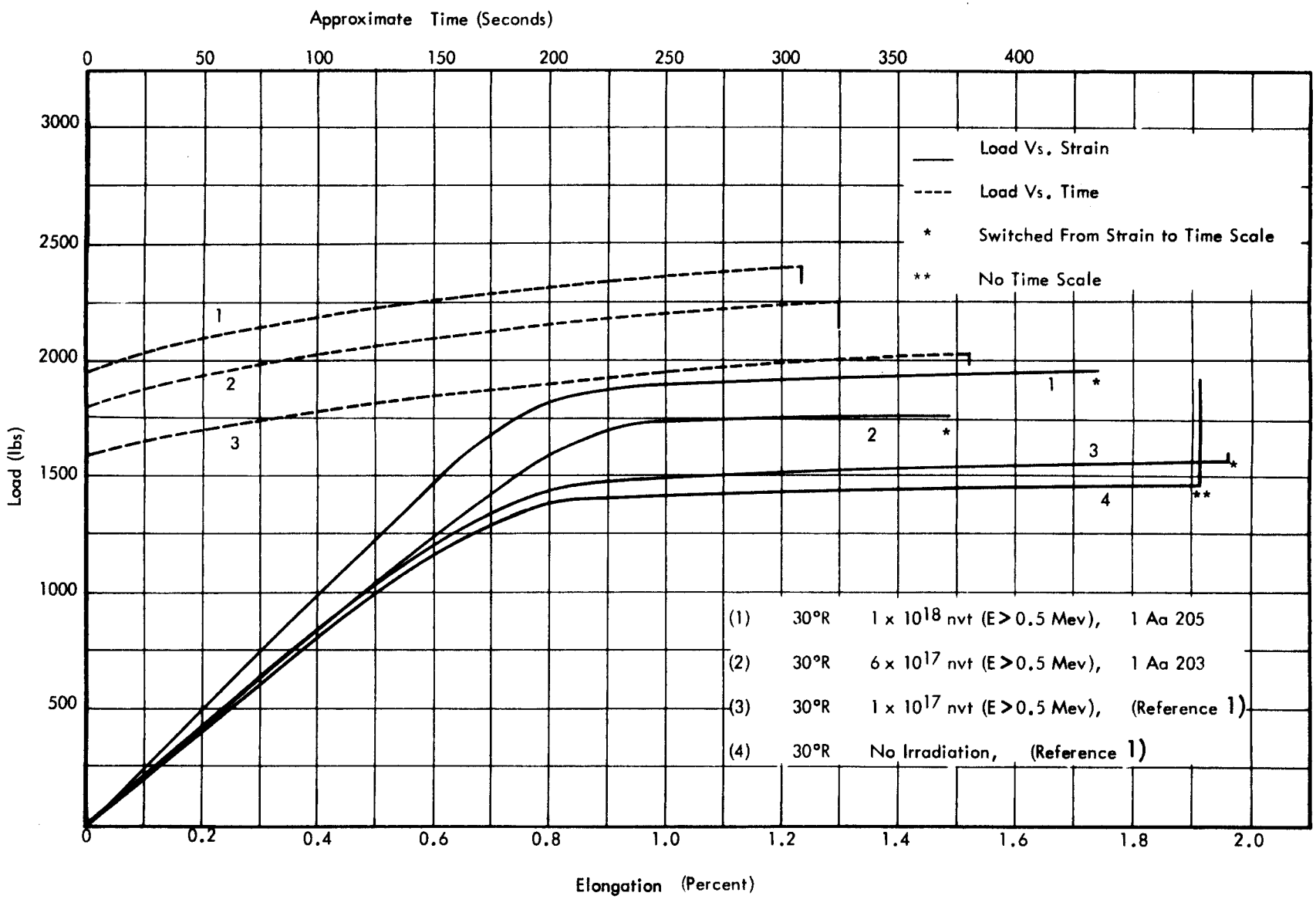

FIGURE 24 TYPICAL LOAD-ELONGATION CURVES FOR TITANIUM 55A

ABSTRACT

This is the third quarterly report summarizing, to date, studies (under Contract NAS 3-7985) of the effects of nuclear radiation on materials at cryogenic temperatures. These studies include the effects of (1) 10^{18} nvt at 30°R on tensile properties of titanium base alloys; (2) irradiation temperature (30°R to 540°R) on tensile properties of Aluminum 1099-H14 following irradiations up to 3×10^{17} nvt; (3) annealing following irradiation at 30°R to 10^{17} nvt on tensile properties of Aluminum 1099; (4) irradiation at 30°R on axial, low-cycle fatigue properties of titanium base alloys; and (5) temperature (140°R and 540°R) on tensile properties of Titanium 55A and Aluminum 7178. This report describes maintenance of and modifications to existing test equipment, preparations for testing, tensile test results from Titanium 55A, partial in-pile tensile test results from Aluminum 1099 (including annealing) and Titanium-5Al-2.5 Sn (ELI), and out-of-pile tensile test results from Aluminum 1099 and Aluminum 7178.

APPENDIX A

DISTRIBUTION

NASA-Lewis Research Center (3)
21000 Brookpark Road
Cleveland, Ohio 44135
Attention: Charles L. Younger (NSD)

NASA-Lewis Research Center (1)
21000 Brookpark Road
Cleveland, Ohio 44135
Attention: T. J. Flanagan (P&SD)

NASA-Lewis Research Center (1)
21000 Brookpark Road
Cleveland, Ohio 44135
Attention: Norman T. Musial

NASA-Scientific & Technical Information Facility (6)
Box 5700
Bethesda, Maryland 20014
Attention: NASA Representative (CRT)

NASA-Lewis Research Center (2)
21000 Brookpark Road
Cleveland, Ohio 44135
Attention: Library

NASA-Lewis Research Center (1)
21000 Brookpark Road
Cleveland, Ohio 44135
Attention: Report Control Office

U.S. Atomic Energy Commission (3)
Technical Reports Library
Washington, D.C.

U. S. Atomic Energy Commission (1)
Division of Technical Information Extension
P.O. Box 62
Oak Ridge, Tennessee 37831

National Aeronautics & Space Administration (1)
Washington, D.C. 20546
Attention: George C. Deutsch (Code RRM)

National Aeronautics & Space Administration (1)
Washington, D.C. 20546
Attention: David Novik, Chief (Code RNV)

AEC-NASA Space Nuclear Propulsion Office (2)
U.S. Atomic Energy Commission
Washington, D.C. 20545
Attention: F. C. Schwenk

AEC-NASA Space Nuclear Propulsion Office (1)
U.S. Atomic Energy Commission
Washington, D.C. 20545
Attention: J.E. Morrissey

National Aeronautics & Space Administration (1)
Space Nuclear Propulsion Office-Cleveland
Lewis Research Center
21000 Brookpark Road
Cleveland, Ohio 44135
Attention: L.C. Corrington

NASA-Lewis Research Center (3)
21000 Brookpark Road
Cleveland, Ohio 44135
Attention: M.H. Krasner,
Mail Stop 49-2

NASA-Lewis Research Center (1)
21000 Brookpark Road
Cleveland, Ohio 44135
Attention: H.J. Heppler, Jr.

NASA-Lewis Research Center (2)
21000 Brookpark Road
Cleveland, Ohio 44135
Attention: Dr. John C. Liwosz

NASA-Plum Brook Station (3)
Sandusky, Ohio 44870
Attention: Donald B. Crandall

NASA-Lewis Research Center (1)
21000 Brookpark Road
Cleveland, Ohio 44135
Attention: Office of Reliability &
Quality Assurance

NASA-Ames Research Center (1)
Moffett Field, California 94035
Attention: Library

NASA-Flight Research Center (1)
P.O. Box 273
Edwards, California 93523
Attention: Library

NASA-Goddard Space Flight Center (1)
Greenbelt, Maryland 20771
Attention: Library

Jet Propulsion Laboratory (1)
4800 Oak Grove Drive
Pasadena, California 91103
Attention: Library

NASA-Langley Research Center (1)
Langley Station
Hampton, Virginia 23365
Attention: Library

NASA-Manned Spacecraft Center (1)
Houston, Texas 77001
Attention: Library

NASA-Western Operations (1)
150 Pico Boulevard
Santa Monica, California 90406
Attention: Library

NASA-Marshall Space Flight Center (1)
Huntsville, Alabama 35812
Attention: Library

NASA-Marshall Space Flight Center (1)
Huntsville, Alabama 35812
Attention: W.Y. Jordan, P&VE-FN

NASA-Marshall Space Flight Center (1)
Huntsville, Alabama 35812
Attention: Dr. W.R. Lucas,
M-P & VE-M

NASA-Marshall Space Flight Center (1)
Huntsville, Alabama 35812
Attention: R.D. Shelton, M-RP-N

Aerojet-General Corporation (1)
P.O. Box 1947
Sacramento, California
Attention: W.A. Greenhow, Manager
Radiation Effects Program
Department 7431

Aerojet-General Corporation (2)
P.O. Box 1947
Sacramento, California
Attention: C.K. Soppet, Manager
Nuclear Operations

Aerojet-General Corporation (3)
P.O. Box 296
Azusa, California
Attention: C.N. Trent, Associate Director
NERVA Operations

Aerojet-General Corporation (1)
P.O. Box 1947
Sacramento, California
Attention: Dr. W. Weleff

Aerojet-General Nucleonics (1)
A Division of Aerojet-General
Corporation
P.O. Box 77
San Ramon, California 94583
Attention: G. A. Linenberger,
General Manager

Aluminum Company of America (1)
P.O. Box 1012
New Kensington, Pennsylvania
Attention: Edwin H. Spuhler

Argonne National Laboratories (1)
P.O. Box 299
Lemont, Illinois
Attention: T. H. Blewitt

Argonne National Laboratory (1)
Library Services Dept. 203-CE 125
9700 South Cass Avenue
Argonne, Illinois 60440
Attention: Report Section

Arthur D. Little Company, Inc. (1)
Acorn Park
Cambridge, Massachusetts
Attention: Charles A. Schulte

Atomics International (4)
P.O. Box 309
Canoga Park, California
Attention: F. E. Farhat, Librarian

Battelle Memorial Institute (1)
505 King Avenue
Columbus, Ohio 43201
Attention: D.J. Hammon, Radiation
Effects Information Center

Battelle Memorial Institute (1)
505 King Avenue
Columbus, Ohio 43201
Attention: Roger J. Runck

Battelle Memorial Institute (1)
Northwest Laboratories
326 Building, 300 Area
Richland, Washington 99352
Attention: Dr. T. T. Claudson

Battelle-Northwest (1)
P.O. Box 999
Richland, Washington 99352
Attention: Spencer H. Bush

Beech Aircraft Corporation (1)
P.O. Box 631
Boulder, Colorado 80301
Attention: Technical Library

The Bendix Corporation (1)
Research Laboratory Division
Southfield, Michigan
Attention: Frank W. Poblenz,
Library Services

The Boeing Company (1)
Aerospace Group
P.O. Box 3707
Seattle, Washington 98124
Attention: Ruth E. Peerenboom,
Processes Supervisor

Brookhaven National Laboratory (1)
Upton Long Island, New York 11973
Attention: D.H. Gurinsky

Brookhaven National Laboratory (1)
Upton Long Island, New York 11973
Attention: Paul W. Levy, Department of Physics

Bureau of Naval Weapons (1)
Washington, D.C.
Attention: J.H. Terry, Captain, RRNU

California Institute of Technology (1)
1201 East California Street
Pasadena, California 91109
Attention: General Library

Carbone Company (1)
Toonton, New Jersey
Attention: E.P. Eaton

Carpenter Steel Company (1)
P.O. Box 662
Reading, Pennsylvania
Attention: Neil J. Culp

Department of the Army (1)
United States Army Munitions Command
Frankford Arsenal
Philadelphia, Pennsylvania
Attention: Librarian

Douglas Aircraft Company, Inc. (2)
Missile & Space Systems Division
3000 Ocean Park Blvd.
Santa Monica, California 90406
Attention: A2-260 Library

General Dynamics/Convair (1)
P.O. Box 1128
San Diego, California 92112
Attention: A. Hurlich, Manager
Materials & Processes Section,
Mail Zone 572-00

General Dynamics/Fort Worth (1)
P.O. Box 748
Fort Worth, Texas 76101
Attention: Mr. Bob Vollmer,
Administrative Assistant
President's Office

General Electric Company (1)
Nuclear Materials & Propulsion Operation
P.O. Box 132
Cincinnati, Ohio 45215
Attention: J.W. Stephenson

Hughes Aircraft Company (1)
Nucleonics Division
Fullerton, California
Attention: Dr. A.M. Liebschutz

IIT Research Institute (1)
10 W. 35th Street
Chicago 16, Illinois
Attention: D.J. McPherson,
Vice President

International Nickel Company, Inc. (1)
Huntington Alloy Products Division
Huntington, West Virginia
Attention: E.B. Fernsler

Kaman Aircraft Corporation (1)
Kaman Nuclear Division
Colorado Springs, Colorado
Attention: Mary G. Brown, Librarian

Lockheed-Georgia Company (1)
Burbank, California 91503
Attention: Dr. Lewis Larmore,
Chief Scientist

Lockheed-California Company (2)
Burbank, California 91503
Attention: Central Library, Bldg. 63
Scientific & Technical
Information Center

Lockheed-California Company (1)
Burbank, California 91503
Attention: H.B. Wiley,
Engineering Research

Lockheed-Georgia Company (1)
Nuclear Laboratory
P.O. Box 128
Dawsonville, Georgia
Attention: Dr. M.M. Miller, Manager
Nuclear Aerospace Division

Lockheed-Georgia Company (15)
P.O. Box 2155
Sandusky, Ohio 44870
Attention: C. A. Schwanbeck

Lockheed-Georgia Company (1)
Nuclear Laboratory
P.O. Box 128
Dawsonville, Georgia
Attention: Information Center

Lockheed Missiles & Space Company (1)
3251 Hanover Street
Palo Alto, California
Attention: John C. McDonald,
Materials Research Staff

Lockheed Missiles & Space Company (2)
3251 Hanover Street
Palo Alto, California
Attention: Sci-Tech Information Center

Lockheed Missiles & Space Company (1)
3251 Hanover Street
Palo Alto, California
Attention: M.A. Steinberg, 52-30, 201

Lockheed Missiles & Space Company (1)
Sunnyvale, California
Attention: H.F. Plank, Nuclear Space
Programs

Los Alamos Scientific Laboratory (1)
P.O. Box 1663
Los Alamos, New Mexico 87544
Attention: Glen A. Graves

Los Alamos Scientific Laboratory (3)
P.O. Box 1663
Los Alamos, New Mexico 87544
Attention: Report Library

The Martin Company (1)
P.O. Box 179
Denver, Colorado 80201
Attention: F.R. Schwartzberg, G0534

Mechanical Properties Data Center (1)
Suttons Bay, Michigan 49682
Attention: Matthew J. Kanold,
Administrative Assistant

National Bureau of Standards (1)
Boulder, Colorado 80302
Attention: Cryogenic Data Center

National Bureau of Standards (1)
Cryogenic Engineering Laboratory
Boulder, Colorado 80302
Attention: R.P. Reed

North American Aviation (1)
Rocketdyne Division
6633 Canoga Avenue
Canoga Park, California
Attention: Technical Information Center

North American Aviation, Inc. (1)
Space & Information Systems Division
12214 Lakewood Blvd.
Downey, California 90241
Attention: Technical Information Center
D/41-096-410, AJ01
For: T. M. Littman, D/141-093-33

Northrop Corporation (1)
Norair Division
3901 W. Broadway
Hawthorne, California
Attention: Technical Information 3343-32

Oak Ridge National Laboratory (1)
Oak Ridge, Tennessee 37831
Attention: D.S. Billington

Ohio State University Libraries (1)
Serial Division
1858 Neil Avenue
Columbus, Ohio 43210

Pennsylvania State University (1)
105 Hammond Building
University Park, Pennsylvania 16802
Attention: Mr. Joseph Marin, Engineering Mechanics Department

Picatinny Arsenal (1)
Technical Information Section, SMUPA-VA6
Dover, New Jersey 07801
Attention: Commanding Officer

Purdue University (1)
Lafayette, Indiana
Attention: Librarian

Pure Carbon Company (1)
Wellsville Street
Saint Marys, Pennsylvania
Attention: Robert Paxon

Reynolds Metals Company (1)
6601 West Broad Street
Richmond, Virginia
Attention: L. E. Householder

Rice University (1)
P.O. Box 1892
Houston, Texas 77001
Attention: The Fondren Library

Rocketdyne (1)
A Division of North American Aviation, Inc.
6633 Canoga Avenue
Canoga Park, California
Attention: Mr. G.A. Fairboirn, D/596-174Z-2

Sandia Corporation (1)
P.O. Box 5800
Sandia Base
Albuquerque, New Mexico 87115
Attention: Technical Library

Southeastern Research Insitute (1)
Birmingham, Alabama
Attention: J.R. Kattus

Special Metals, Inc. (1)
New Hartford, New York
Attention: Robert Neilsen

Titanium Metals Corporation of America (1)
233 Broadway
New York, New York
Attention: E.F. Erbin, Staff

TRW Systems (1)
Technical Information Center
One Space Park
Redondo Beach, California 90278

U.S. Air Force (1)
Air Force Weapons Laboratory
Kirtland AFB, New Mexico 87117
Attention: Technical Library (WLIL)

U.S. Air Force (1)
AF Materials Laboratory, Research & Technology Division, AFSC
Wright-Patterson AFB, Ohio 45433
Attention: Harold M. Hormann

U.S. Air Force (1)
Foreign Technology Division, TDEPR
Wright-Patterson AFB, Ohio 45433
Attention: Lt. Schauffle

U.S. Air Force (1)
AFML (MAAM) (1A)
Wright-Patterson AFB, Ohio 45433

U.S. Army Materials Research Agency (1)
Watertown Arsenal
Watertown, Massachusetts
Attention: T.S. DeSisto

U.S. Naval Research Laboratory (1)
Washington, D.C. 20390
Attention: Dr. Albert V.H. Masket,
Mechanics Division, Code 6204

U.S. Naval Research Laboratory (1)
Washington, D.C. 20390
Attention: L.E. Steele, Head, Reactor
Materials Branch, Metallurgy Division

United States Steel Corporation (1)
Monroeville, Pennsylvania
Attention: Waldo Rall

University of California (1)
Lawrence Radiation Laboratory
Berkeley, California
Attention: Technical Information Division

University of California (1)
Lawrence Radiation Laboratory
P.O. Box 808
Livermore, California
Attention: Technical Information Division

University of California (1)
Los Alamos Scientific Laboratory
P.O. Box 1663
Los Alamos, New Mexico 87544
Attention: W.L. Kirk

University of California (1)
405 Hilgard Avenue
Los Angeles, California 90024
Attention: Engineering & Mathematical
Sciences Library

University of California (1)
University Research Library
Los Angeles, California 90024
Attention: Serials Department

University of Chicago (1)
5640 Ellis
Chicago, Illinois 60637
Attention: Institute of Metals Library

University of Colorado (1)
Engineering Research Center
Boulder, Colorado
Attention: K.D. Timmerhaus, Associate
Dean of Engineering

University of Georgia Libraries (2)
Athens, Georgia 30601
Attention: Acquisitions Division

University of Michigan (1)
Ann Arbor, Michigan 48104
Attention: Robert G. Carter,
University Library

Westinghouse Electric Corporation (1)
Astronuclear Laboratory
P.O. Box 10864
Pittsburgh, Pennsylvania 15235
Attention: Dr. D.E. Thomas, Manager
Materials Department

Westinghouse Electric Corporation (1)
Metallurgical Division
Pittsburgh, Pennsylvania 15235
Attention: E.T. Wessel, Research &
Development Center