A NUMERICAL ANALYSIS OF HYSTERESIS AND EDDY CURRENT LOSSES IN SOLID CYLINDRICAL RODS OF #1010 STEEL

M. D. Abrams
Member IEEE

D. H. Gillott
Member IEEE

Both of:
University of Pittsburgh
Pittsburgh, Pa.

FACILITY FORM 602

N66 28519 (ACCESSION NUMBER)
(THRU)
20 (PAGES)
1 (CODE)
75741 (NASA CR OR TMX OR AD NUMBER)
17 (CATEGORY)

GPO PRICE $

CFSTI PRICE(S) $

Hard copy (HC) 1.00

Microfiche (MF) .50

ff 653 July 65

A paper recommended by the IEEE Rotating Machinery Committee of the IEEE Power Group for presentation at the IEEE Summer Power Meeting, New Orleans, La., July 10-15, 1966. Manuscript submitted April 18, 1966; made available for printing May 19, 1966.

Price: $1.00
(75¢ at meeting)

(15¢ per copy additional if first class mailing desired)

(25¢ per copy additional if air mail is desired)

All Rights Reserved by
The Institute of Electrical and Electronics Engineers, Inc.

345 East 47th Street
New York, N. Y. 10017

Litho in USA

Paper No.
31 PP 66-438

A NUMERICAL ANALYSIS OF HYSTERESIS AND EDDY CURRENT LOSSES IN SOLID CYLINDRICAL RODS OF #1010 STEEL*

M. D. Abrams **
Member IEEE

D. H. Gillott **
Member IEEE

INTRODUCTION

Recent studies by the authors of this paper concerning Flux Penetration in Ferromagnetic Material [1,2,3] have led to the development of a computerized procedure for determining the intensity and phase of magnetic field penetration into ferromagnetic materials of various geometries. The present paper extends this prior work to the specific analysis of losses in a cylindrical rod of #1010 steel; the basic procedure and theory, however, are generally applicable to all isotropic ferromagnetic materials. The data used in this procedure are obtained directly from the actual magnetization curve and major hysteresis loop of the material under study. It is believed that the procedure described herein represents a major contribution to the literature of loss analysis.

THEORETICAL BACKGROUND

As shown in reference (2), when a cylindrical rod of radius a is subjected to a known magnetic field intensity axially directed at its surface, $H_z(a,t)$, the finite-difference relationship between magnetic induction, $B_z(r,t)$, and magnetic field intensity, $H_z(r,t)$, as a function of distance (radius) and time, is given by

$$B_z(i,j+k) = \frac{(\Delta t)\,\rho 10^8}{0.4\pi(\Delta r)^2}\left[H_z(i+h,j)\cdot\left(1+\frac{\Delta r}{r}\right)-2H_z(i,j)+H_z(i-h,j)\cdot\left(1-\frac{\Delta r}{r}\right)\right]+B_z(i,j)\ , \qquad (1)$$

where ρ is the resistivity of the material, k and Δt are the time increments, h and Δr are the space increments, i is the space index, j is the time index, and r is the radius corresponding to space index i. Note that the factor of 0.4π in equation (1) arises from the choice of c.g.s. units. Equation (1) is written in terms of flux density and magnetic field intensity. The relationship between these quantities is implicit and is supplied to the computer as data describing the magnetic characteristics of the material.

Assuming the boundary and initial conditions

$$B_z(r,0) = 0 \qquad (2)$$

$$H_z(a,t) = \text{known driving function} \qquad (3)$$

$$\left.\frac{\partial B_z(r,t)}{\partial r}\right|_{r=0} = 0 \qquad (4)$$

*Partially supported by the National Science Foundation under Grants GP-3086 and GP-[illegible] and by the National Aeronautics and Space Administration under a Pre-Doctoral Fellowship.

**The authors are with the Department of Electrical Engineering, University of Pittsburgh, Pittsburgh, Pennsylvania 15213.

an iterative procedure is implemented to determine $B_z(r,t)$. It should be noted that in this procedure, B_z and H_z are related, not by a linear or other closed-form mathematical approximation, but by the data points describing the D.C. hysteresis loop of the material being considered.

EDDY CURRENT LOSSES

When Ampere's Circuital Law is applied to the path 1,2,3,4,1 of Figure 1, equation (5) is obtained,

$$\frac{\partial H_z(r,t)}{\partial r} = -0.4\,\pi J_\theta(r,t) \quad . \tag{5}$$

where $J_\theta(r,t)$ is the current density as a function of space and time. The time average squared current is then:

$$\overline{J_\theta^{\,2}(i)} = \frac{1}{T}\oint_0^T J_\theta^{\,2}(r,t)\,dt \tag{6}$$

or, in difference terms,

$$\overline{J_\theta^{\,2}(i)} = \frac{1}{T}\sum_{j=1}^{T} J_\theta^{\,2}(i,j) \tag{7}$$

Next, the power density may be written as

$$W_E'(i) = \rho\,\overline{J_\theta^{\,2}(i)} \tag{8}$$

where W_E' is in units of watt cm^{-3}, if J is in amp cm^{-2} and ρ is in ohm cm.

If the space indexing is so arranged that $i=2$ corresponds to $r=0$, then one observes that

$$r = (i-1.5)\ \Delta r \tag{9}$$

is the mean radius of the segment between r and $r+\Delta r$. Equation (8) may now be employed to determine the power per unit length of rod by multiplying equation (8) by an element of area in a z=constant plane. With reference to Figure 1, one will note that the desired element of area is

$$dA = r\,dr\,d\Psi \quad . \tag{10}$$

In difference notation, when the azimuthal angle Ψ is allowed to vary over one revolution, equation (9) may be applied to equation (10) to yield

$$dA = 2\pi(i-1.5)(\Delta r)^2 \quad . \tag{11}$$

The power per unit length, W_E, is thus

$$W_E = 2\pi\rho(\Delta r)^2\sum_i (i-1.5)\,\overline{J_\theta^{\,2}(i)} \quad . \tag{12}$$

HYSTERESIS LOSSES

The energy loss per hysteresis loop cycle is

$$\text{Energy} = \oint B\, dH \tag{13}$$

Power loss in watts, employing c.g.s. magnetic units, is

$$W_H' = \frac{f}{4\pi \times 10^7} \oint B\, dh \quad , \tag{14}$$

where f is the frequency in cycles sec^{-1} , B is the flux density in gauss, H is the magnetic intensity in oersteds and W_H' is power loss in the watt cm^{-3}. Casting equation (14) in difference form yields

$$W_H'(i) = \frac{f}{4\pi \times 10^7} \Delta H(i) \sum_\lambda \Delta B_\lambda(i) \tag{15}$$

where the sum-product, $\Delta H(i) \sum_\lambda B_\lambda(i)$, represents the area of the hysteresis loop numerically analyzed. If equation (15) is now multiplied by equation (11) the hysteresis loss at a given depth, i, per unit length of rod is obtained:

$$W_H'(i) = \frac{2\pi f(i-1.5)(\pi r)^2}{4\pi \times 10^7} \left[\Delta H(i) \sum_\lambda B_\lambda(i)\right] \quad . \tag{16}$$

The total power loss due to hysteresis is the sum of terms of the type given in equation (16), with the surface (i=19) and the center (i=2) of the cylinder weighted one half to account for their reduced area:

$$W_H = \frac{2f}{4\times10^7}\left[1/2 \sum_{i=2,19} (i-1.5)\, \Delta H(i) \sum_\lambda \Delta B_\lambda(i) + \sum_{i=3}^{18} (i-1.5)\Delta H(i) \sum_\lambda \Delta B_\lambda(i)\right] \quad . \tag{17}$$

The evaluation of the sum, $\Delta H(i) \sum_\lambda \Delta B_\lambda(i)$, is interesting and worthy of elaboration: The hysteresis loops describing B-H variation at each space point in the material are stored in the memory of the digital computer as a result of the procedure discussed below. If one considers the maximum, $H_{max}(i)$, and the minimum $H_{min}(i)$, extremities of magnetization at each space point, $\Delta H(i)$ may be simply defined as

$$\Delta H(i) = H_{max}(i) - H_{min}(i) \;/\; 100 \quad , \tag{18}$$

where the factor 100 has been arbitrarily selected. It might be noted that on the major, saturated, hysteresis loop

$$\Delta H(i) = 2H_c \;/\; 100 \quad , \tag{19}$$

where H_c is known as the coercive field.

Since the procedure described below for the determination of the hysteresis loops yields only the left side of the hysteresis curve, which is assumed to be centrally

symmetric, it will be observed that the $\Delta B_\lambda(i)$ corresponding to each $\Delta H(i)$ may be evaluated as the sum of the $B_\lambda(i)$ corresponding to $-H(i)$. This is illustrated in Figure 2. Thus, the area of the hysteresis loop is evaluated as

$$\text{Area} = \Delta H(i) \sum_{\lambda} \Delta B_\lambda(i) \tag{20}$$

DETERMINATION OF MINOR HYSTERESIS LOOPS

The determination of minor hysteresis loops is necessary because the maximum flux density decreases with depth into the material and it is important to develop a procedure for determining on which hysteresis loop such a variation is occurring. The loop on which variation is taking place is a member of a family consisting of a very large number of minor loops.

The authors, therefore, have derived a relationship which is an extension of the one developed in references (2) and (4), which, when solved by a digital computer, makes it possible to obtain the data points describing any minor hysteresis loop from the given data of the dc major saturated hysteresis loop and the dc magnetization curve. This data provides the double valued relationship between flux density and magnetic intensity used implicitly in the finite difference equations.

In this development, it is assumed that the dc magnetization curve is the loci of the vertices of the nested symmetrical minor hysteresis loops. When an initially demagnetized sample is subjected to an applied magnetic field, the B-H relationship in the material is assumed to be described by the normal magnetization curve, curve A of Figure 3, until a local maximum is reached. When the amplitude of the applied magnetic field begins to decrease, the B-H relationship in the material is no longer described by the normal magnetization curve, but rather by one of the family of hysteresis loops. If the local maximum, point I of Figure 3, is equal to or greater than the saturation flux density, the hysteresis loop described will be the major saturated hysteresis loop; curve B of Figure 3. If the local maximum is less than the saturation flux density, point II of Figure 3, the hysteresis loop described will be one of the nested minor hysteresis loops. For cases where the local maximum, point II of Figure 3, is less than 0.01 of the saturation flux density the minor hysteresis loop will be represented by the normal magnetization curve; the following procedure, therefore, will be bypassed. This approximation is employed to speed up computer time without sacrificing accuracy.

The method by which any of these minor hysteresis loops is determined using known data describing the major saturated hysteresis loop and the dc magnetization curve is described below with reference to Figure 3.

In Figure 3, point II, on the normal magnetization curve (A), represents a local maximum less than the saturation flux density. The first step in the procedure is to locate point II* which is centrally symmetric with respect to point II. Having located point II* the next step is to scale the left curve of the major hysteresis loop horizontally so that it passes through point II*. This curve is represented by the dashed lines, curve D. The horizontally scaled major hysteresis curve is then scaled vertically with respect to point II* so that it passes through point II* and its centrally symmetric point, II. The resultant curve, curve E, represents the left half of the desired minor hysteresis loop.

CALCULATIONS AND TESTS

Actual computer calculations were carried out on the University of Pittsburgh's IBM 7090 digital computer. Quantities computed included flux density, eddy current density and hysteresis loss intensity at various depths in the rod, total eddy current loss, and total hysteresis loss. A number of reliable tests were needed to provide checks on the theoretical work. A 5/8 inch round rod of #1010 steel was shaped into a 11-7/16 inch average diameter ring, welded, and annealed to form a homogeneous continuous magnetic path. A primary or driving winding was wound on the ring and excited by a sinusoidal 60 c.p.s. source; tests were conducted with the device in an oil bath to make certain that the temperature of the specimen was known and remained nearly constant.

Test results are compared in Figure 4, not only with the calculations made by the procedures set forth in this paper, but also with Gillott's previous work[1] which neglected hysteresis phenomena. The reader will note that when hysteresis is considered that the eddy current portion of the losses decreases, but the total calculated losses increases to more closely match the experimentally determined total losses.

The calculated values of eddy current loss, hysteresis loss, and total core loss are given below for three values of applied magnetic field intensity.

$H_{max}(a,t)$ (oersteds)	P_e (watts)	P_h (watts)	P_T (watts)
20	9.60	5.32	14.92
50	49.14	6.78	55.92
60	68.34	7.10	75.44

SUMMARY AND CONCLUSIONS

The equation and results presented in this paper are for a cylindrical rod subjected to a sinusoidally varying 60 cycles per second magnetic field. The basic equations, however, were developed for solid ferromagnetic plates and cylinders[2], and the computer procedure is applicable to both periodic and non-periodic driving functions.

To the authors' knowledge, this represents a unique procedure for accurately calculating eddy current losses and hysteresis losses in ferromagnetic materials. Some of the engineering applications of this work are the losses in end plates, through bolts and finger plates of rotating machines; losses in solid iron rotors of turbine generators, some rotating induction machines, and eddy current brakes. Stationary electrical equipment for the heating of billets, electrical furnaces, and equipment for certain heat treating processes suggest further applications for the results of this present paper.

APPENDIX: COMPUTER PROGRAM

Language: MAD (Michigan Algorithmic Decoder)

Computer: IBM 7090

Monitor: University of Michigan Executive System

Variable Name	Description
B(I)	B(i,j)
B OK	B one cycle previous (used in STATE).
BDATA, HDATA	Data set describing left side of major saturated hysteresis loop.
BMAJ	Vertical transfation reference in DETL.
B PREV(I)	B(i,j-1)
BREF, HREF	Local maximum in DETL.
BTRANS, HTRANS	Scaled curve in DETL.
BVIRG, HVIRG	Data set describing virgin magnetization curve.
CLØCK Ø	Starting time of program.
CØN	$\frac{(\Delta t)\ \rho 10^8}{0.4\pi(\Delta r)^2}$
CØNVG	Steady state factor
DELTA B(I)	$\Delta B(i)$
DELTA H(I)	$\Delta H(i)$
DELTA R	Δr
FLAG	Steady state determination index.
GL	Index in TERPØ.
GQ	Index in TERPØ.
H(I)	H(i,j)
HMAJ	Horizontal translation reference point in DETL.
I	i(space index)
J(I)	$J_\theta(r,t)$
J SQ(I)	$J_\theta^2(r,t)$
L	Ordering index on XCAL, YCAL.
LØ X, HI X	Limits on integration of hysteresis loop.
M	Count index on XCAL, YCAL.
PWR EDY(I)	$W_E'(i)$
PWR HYS(I)	$W_H'(i)$

Variable Name	Description
Q	Index in TERPØ.
QQ	Ordering index in TERPØ.
RHØ	$\rho \times 10^8$
SUM DEL(I)	$\sum B_\lambda(i)$
T	t
TØT EDY	W_E
TØT HYS	W_H
TØT PWR	W_T
XCAL, YCAL	List of B-H points currently in use at a space point.
XIN(T)	H(a,j)
X PØINT	H value used in integrating hysteresis loop.
XUSE, YUSE	List used in TERPØ.
Z	Final cycle index.

Function	Description
.ABS. X	|X|
.AND.	(Logical).
CLØCK.	Reads the time clock attached to the computer.
COS.(x)	cosine(x)
DETL.	Procedure to determine on which hysteresis loop variation is occuring.
DØUBLE.	Loading procedure.
.E.	=
F TRAP.	Converts an underflow to zero.
ERRØR.	Initiates error sequence in monitor.
.G.	>
.L.	<
.ØR.	(Logical) +
ØUTPUT.	Determines W_E, W_H and W_T
STATE.	Tests for steady state by comparing B values one cycle apart.
SYSTEM.	Returns control to monitor.
TERPØ.	Linear interpolation function.

Remarks:

Statement number(s)	Comments
001,089	Indicates running time of program
012-017	Check if convergence criteria is met
022-024	Loading of H(a,t)
025-028	Initializing all space points to virgin magnetization curve
029,030	Begins procedure
035,042	Tests if TARPØ. has modified XCAL, YCAL
038,050	Tests proper B-H relationship
061	Prints output at steady state check points
062	Prints complete output during last cycle
101	$J_\theta^c(i)$ is implicitly determined
101	ρ = RHØ x 10^{-8}
106-110	Evaluation of $\Delta H(i) \sum_i \Delta B_\lambda(i)$
155-163	Restoration of virgin magnetization curve
215	Zero width hysteresis loop when local maximum is small

```
$ ZERO, COMPILE MAD, PUNCH OBJECT, EXECUTE, DUMP

MAD (24 SEP 1964 VERSION) PROGRAM LISTING ... ... ...

        CLOCK O =CLOCK.(0)                                          *001
        PRINT COMMENT $1 TOTAL LOSSES IN CYLINDRICAL RODS $         *002
        F TRAP.                                                     *003
        INTEGER K,I,T,N,M,Z,II,CLOCK..CLOCK C,FLAG                  *004
        DIMENSION M(44),L(19),BPREV(19),H(19),J(19),                *005
      1     YCAL(19*60),XCAL(19*60),BDATA(44),HDATA(44) ,           *005
      2     BVIRG(30),HVIRG(30),XIN(360),B(19),B CK(4),             *005
      3     J SQ(19),PWR EDY(19),DELTA H(19),SUM DEL(19),PWR HYS(19)
        READ AND PRINT DATA                                         *006
        READ FORMAT INPUT,(K=2,1,K.G.30,BVIRG(K),HVIRG(K))          *007
        READ FORMAT INPUT,(K=2,1,K.G.44,BDATA(K),HDATA(K))          *008
        VECTOR VALUES INPUT=$ 2F12.4* $                             *009
        DELTA R= RADIUS/17.                                         *010
        PI=3.1415926                                                *011
        WHENEVER (RHO*(1.+COS.(PI/(36.*DELTA R)))).G.               *012
      4         (0.4*PI*360.*F*DELTA R.P.2*BVIRG(2)/HVIRG(2))       *012
          PRINT COMMENT $6 NUMERICAL SOLUTION UNSTABLE, EXECUTION
      1   TERMINATED $                                              *013
          SYSTEM.                                                   *014
        OTHERWISE                                                   *015
          PRINT COMMENT $6 NUMERICAL SOLUTION ASSUMED STABLE $      *016
        END OF CONDITIONAL                                          *017
        CON= RHO/(F*360.*0.4*PI*DELTA R .P.2)                       *018
        PRINT RESULTS CON                                           *019
        DEL PHI= PI/180.                                            *020
        THROUGH INX, FOR T=0,1,T.G.360                              *021
        XIN(T)=PEAK*SIN.(PHI)                                       *022
        PHI= PHI+ DEL PHI                                           *023
INX                                                                 *024
        THROUGH VIRGIN,FOR I=2,1,I.G.19                             *025
        DOUBLE.(I)                                                  *026
        L(I)=-1                                                     *027
VIRGIN                                                              *028

      R     WHEN L=-1, K=2 OCCURS AT THE UPPER RIGHT END OF
      R     THE HYSTERESIS CURVE.WHEN L=+1, K=2 OCCURS AT
      R     THE LOWER LEFT END.

        I=18                                                        *029
        T=0                                                         *030
LOOP                                                                *031
        WHENEVER I.E.18                                             *032
           H(I+1)=XIN(T)                                            *033
FIND H2    H (I)=TERPO.(B (I),YCAL,XCAL,2,M(I),3,I)                 *034
              WHENEVER H(I).G.1E22, TRANSFER TO FIND H2             *035
           B PREV(I+1)=B(I+1)                                       *036
           B(I+1)=TERPO.(XIN(T+1),XCAL,YCAL,2,M(I+1),2,I+1)         *037
            DETL.(I+1)                                              *038
        END OF CONDITIONAL                                          *039
```

```
        WHENEVER I.G.2                                                  *040
FIND H1     H (I-1)=TERPO.(B (I-1),YCAL,XCAL,2,M(I-1),3,I-1)            *041
            WHENEVER H(I-1) .G. 1E29,  TRANSFER TO FIND H1              *042
        END OF CONDITIONAL                                              *043
        BPREV(I)=B(I)                                                   *044
        WHENEVER I.G.2                                                  *045
          B(I)=(CON*(H(I+1)*(1.+(1./(2.*(I-2))))-2.*H(I)                *046
     1          +H(I-1)*(1.-(1./(2.*(I-2))))) ) + B(I)                  *046
        OTHERWISE                                                       *047
          B(I)= (2.*CON*(H(I+1)-H(I)) ) + B(I)                          *048
        END OF CONDITIONAL                                              *049
        DETL.(I)                                                        *050
        WHENEVER FLAG.E.1                                               *051
                J(I)=(H(I)-H(I+1))/(DELTA R * 0.4 * PI)                 *052
          WHENEVER Z.E.0, J SQ(I)=J SQ(I)+J(I).P.2                      *053
          WHENEVER Z.E.1  .AND.  T.E.0,  EXECUTE OUTPUT.                *054
        END OF CONDITIONAL                                              *055
        WHENEVER T.GE.3                                                 *056
          WHENEVER N.G.11 .AND. FLAG.NE.1 .AND. I.E.15, EXECUTE STATE.
          T=T+1                                                         *058
          TRANSFER TO LOOP                                              *059
        END OF CONDITIONAL                                              *060
        WHENEVER (T.E.0 .OR. T.E.90 .OR. T.E.180 .OR. T.E.270) .AND.
     1      FLAG.NE.1,  PRINT RESULTS N,T,B(2)...B(19)                  *061
        WHENEVER FLAG.E.1, PRINT RESULTS N,T,B(2)...B(19)               *062
        WHENEVER T.L.359                                                *063
            T=T+1                                                       *064
        OTHERWISE                                                       *065
           T=0                                                          *066
           N=N+1                                                        *067
           WHENEVER Z.E.0,Z=1                                           *068
           WHENEVER FLAG.E.13,Z=0                                       *069
           WHENEVER FLAG.E.13,FLAG=1                                    *070
        END OF CONDITIONAL                                              *071
        I=18                                                            *072
          TRANSFER TO LOOP                                              *073

 R      INTERNAL FUNCTION 'STATE.' DETERMINED WHEN STEADY
 R      STATE CONDITIONS HAVE BEEN ACHIEVED.

        INTERNAL FUNCTION                                               *074
        ENTRY TO STATE.                                                 *075
            WHENEVER T.E.0                                              *076
              WHENEVER .ABS.(B CK(1)-B(I)).L..ABS.(CONVG*B(I)), FLAG=10
              B CK(1)=B(I)                                              *078
            OR WHENEVER T.E.90                                          *079
              WHENEVER .ABS.(B CK(2)-B(I)).L..ABS.(CONVG*B(I))  .AND.
     1          FLAG.E.10,  FLAG =11                                    *080
              B CK(2)=B(I)                                              *081
            OR WHENEVER T.E.180                                         *082
              WHENEVER .ABS.(B CK(3)-B(I)).L..ABS.(CONVG*B(I))  .AND.
     1          FLAG.E.11,  FLAG=12                                     *083
              B CK(3)=B(I)                                              *084
```

```
        OR WHENEVER T.E.270                                          *085
          WHENEVER .ABS.(B CK(4)-B(I)).L..ABS.(CONVG*B(I)) .AND.
     1      FLAG.E.12                                                *086
            FLAG=13                                                  *087
            PRINT COMMENT $6 STEADY STATE ACHIEVED AT$               *088
            MINUTE=CLOCK.(C)-CLOCK O                                 *089
            PRINT RESULTS MINUTE, N, T                               *090
            PRINT COMMENT $6$                                        *091
          END OF CONDITIONAL                                         *092
          B CK(4)=B(I)                                               *093
        END OF CONDITIONAL                                           *094
      FUNCTION RETURN                                                *095
      END OF FUNCTION                                                *096

     R    INTERNAL FUNCTION 'OUTPUT.' DETERMINES AND PRINTS
     R    HYSTERESIS AND EDDY CURRENT LOSSES.

      INTERNAL FUNCTION                                              *097
      INTEGER LO X, HI X                                             *098
      ENTRY TO OUTPUT.                                               *099
          THROUGH POWER, FOR I=2,1,I.G.18                            *100
          PWR EDY(I)=RHO*(1.E-8)*(J SQ(I)/360.)*                     *101
     1      (DELTA R.P.2)*2.*PI*(I-1.5)                              *101
POWER                                                                *102
      LO X=6                                                         *103
      HI X= M(I)-5                                                   *104
      THROUGH LOSS, FOR I=2,1,I.G.19                                 *105
      DELTA H(I)= .ABS.(XCAL(I,LO X) - XCAL(I,HI X))/100.            *106
      THROUGH HYSTRS, FOR XPOINT= .ABS.(XCAL(I,LO X)),  -DELTA H(I),
     1    XPOINT.L. -1.*.ABS.(XCAL(I,HI X))                          *107
      DELTA B=.ABS.(TERPO.(XPOINT,XCAL,YCAL,2,M(I),2,I) +            *108
     1        TERPO.(-XPOINT,XCAL,YCAL,2,M(I),2,I)   )               *108
      SUM DEL(I)= SUM DEL(I)+ DELTA B                                *109
HYSTRS                                                               *110
      PWR HYS(I)=DELTA H(I)*SUM DEL(I)*F*(I-1.5)*                    *111
     1    (DELTA R.P.2)/(2.E7)                                       *111
LOSS                                                                 *112
      THROUGH TOTAL 1, FOR I=2,1,I.G.18                              *113
      TOT EDY=TOT EDY + PWR EDY(I)                                   *114
TOTAL 1                                                              *115
      THROUGH TOTAL 2, FOR I=3,1,I.G.18                              *116
      TOT HYS= TOT HYS+ PWR HYS(I)                                   *117
TOTAL 2                                                              *118
      TOT HYS= TOT HYS+0.5*(PWR HYS(2)+PWR HYS(19))                  *119
      TOT PWR = TOT HYS+ TOT EDY                                     *120
      PRINT COMMENT $2  FINAL RESULTS $                              *121
      PRINT RESULTS PWR EDY(2)...PWR EDY(18), PWR HYS(2)...PWR HYS(19),
     1    TOT EDY, TOT HYS,  TOT PWR                                 *122
      SYSTEM.                                                        *123
      FUNCTION RETURN                                                *124
      END OF FUNCTION                                                *125
```

```
R     INTERNAL FUNCTION 'TERPO.' PERFORMS A LINEAR
R     INTERPOLATION ON A LIST.

R       X IS THE INDEPENDENT VARIABLE
R       XT IS THE NAME OF THE LIST OF INDEPENDENT VARIABLES
R       YT IS THE NAME OF THE LIST OF DEPENDENT VARIABLES
R       LOLIM IS THE LOWER LIMIT ON THE INDEX
R       HILIM IS THE UPPER LIMIT ON THE INDEX
R       ORDER IS THE INDEX ON LOADING
R       FIXED IS THE VALUE OF THE FIXED SUBSCRIPT
R       Y IS THE INTERPOLATED DEPENDENT VARIABLE

R     TERPO.  VERSION 47

      INTERNAL FUNCTION (X,XT,YT,LOLIM,HILIM,ORDER,FIXED)          *126
      DIMENSION XUSE(70),YUSE(70)                                  *127
      INTEGER LOLIM,HILIM,ORDER,FIXED,Q,QQ,GL,GQ                   *128
      ENTRY TO TERPO.                                              *129
              WHENEVER ORDER.E.0                                   *130
      THROUGH IN1, FOR Q=LOLIM,1,Q.G.HILIM                         *131
      XUSE(Q)=XT(Q)                                                *132
      YUSE(Q)=YT(Q)                                                *133
IN 1                                                               *134
              OR WHENEVER ORDER.E.2 .OR. ORDER.E.3                 *135
      THROUGH IN2, FOR Q=LOLIM,1,Q.G.HILIM                         *136
      XUSE(Q)=XT(FIXED,Q)                                          *137
      YUSE(Q)=YT(FIXED,Q)                                          *138
IN 2                                                               *139
              OTHERWISE                                            *140
      PRINT COMMENT$6**** ERROR RETURN FROM ORDER$                 *141
      ERROR.                                                       *142
               END OF CONDITIONAL                                  *143
      Q=(LOLIM+HILIM)/2                                            *144
      QQ=(XUSE(HILIM)-XUSE(LOLIM))/.ABS.(XUSE(HILIM)-XUSE(LOLIM))
      WHENEVER XUSE(Q).L.X                                         *146
        GL=-1                                                      *147
      OR WHENEVER XUSE(Q).G.X                                      *148
        GL=1                                                       *149
      OTHERWISE                                                    *150
        FUNCTION RETURN YUSE(Q)                                    *151
      END OF COND TIONAL                                           *152
T.S.                                                               *153
      WHENEVER Q.G.HILIM  .OR.  Q.L.LOLIM                          *154
          WHENEVER ORDER .E.3  .AND.  M(FIXED).NE.58               *155
          PRINT COMMENT $C  LOLIM OR HILIM HAS BEEN EXCEEDED.      *156
1         INTERPOLATION WILL CONTINUE ON THE VIRGIN CURVE. $       *156
          PRINT RESULTS XUSE(LOLIM), XUSE(HILIM),X,I,N,T           *157
            DOUBLE.(FIXED)                                         *158
          OTHERWISE                                                *159
            PRINT COMMENT$*** ERROR RETURN FROM Q$                 *160
            TRANSFER TO OUT                                        *161
          END OF CONDITIONAL                                       *162
        FUNCTION RETURN 22E33                                      *163
```

```
      OR WHENEVER .ABS. QQ.NE.1                                         *164
        PRINT COMMENT$6*** ERROR RETURN FROM QQ$                        *165
OUT     PRINT RESULTS LOLIM,HILIM,XUSE(LOLIM),XUSE(HILIM),Q,XUSE(Q),
     1      X,GL,ORDER,QQ,FIXED,M(FIXED)                                *166
        ERROR.                                                          *167
      END OF CONDITIONAL                                                *168
      WHENEVER XUSE(Q).L.X                                              *169
        WHENEVER GL.L.0                                                 *170
          Q=Q+QQ                                                        *171
          TRANSFER TO TEST                                              *172
        OTHERWISE                                                       *173
          TRANSFER TO COMP                                              *174
        END OF CONDITIONAL                                              *175
      OR WHENEVER XUSE(Q).G.X                                           *176
        WHENEVER GL.G.0                                                 *177
          Q=Q-QQ                                                        *178
          TRANSFER TO TEST                                              *179
        OTHERWISE                                                       *180
          TRANSFER TO COMP                                              *181
        END OF CONDITIONAL                                              *182
      OTHERWISE                                                         *183
        FUNCTION RETURN YUSE(Q)                                         *184
      END OF CONDITIONAL                                                *185
COMP                                                                    *186
      GQ=Q+QQ*GL                                                        *187
      FUNCTION RETURN YUSE(Q)+((X-XUSE(Q))*(YUSE(GQ)-YUSE(Q))/*188
     1                (XUSE(GQ)-XUSE(Q)))                               *188
      END OF FUNCTION                                                   *189

R     INTERNAL FUNCTION 'DOUBLE.' LOADS THE VIRGIN CURVE
R     INTO THE XCAL,YCAL ARRAY IN BOTH FIRST AND THIRD
R     QUADRANTS.

      INTERNAL FUNCTION (FIX)                                           *190
      INTEGER FIX,V                                                     *191
      ENTRY TO DOUBLE.                                                  *192
              K=2                                                       *193
            THROUGH VRG 1, FOR V=2,1,V.G.58                             *194
            WHENEVER V.L.30                                             *195
              XCAL(FIX  ,V)=-1*HVIRG(K)                                 *196
              YCAL(FIX  ,V)=-1*BVIRG(K)                                 *197
              K=K+1                                                     *198
            OR WHENEVER V.GE.30                                         *199
              XCAL(FIX  ,V)=HVIRG(K)                                    *200
              YCAL(FIX  ,V)=BVIRG(K)                                    *201
              K=K-1                                                     *202
            END OF CONDITIONAL                                          *203
VRG 1                                                                   *204
          M(FIX  )=58                                                   *205
      FUNCTION RETURN                                                   *206
      END OF FUNCTION                                                   *207
```

```
R INTERNAL FUNCTION DETL.

R     DETL. COMPARES THE CURRENT VALUES OF B  AND H  WITH
R     BSAT AND HSAT. IT RETURNS THE CORRECT MINOR LOOP
R     IN XCAL,YCAL. THIS MINOR LOOP WILL HAVE B ,H  AS ITS
R     VERTEX, AND THE VERTEX WILL LIE ON THE VIRGIN CURVE.

R     DETL.  VERSION 4C

      INTERNAL FUNCTION (INDEX)                                  *208
      INTEGER K,L,M,INDEX                                        *209
      DIMENSION HTRANS(44),BTRANS(44)                            *210
      ENTRY TO DETL.                                             *211
      WHENEVER L(INDEX)*B(INDEX).LE. L(INDEX)*B PREV(INDEX),
      L(INDEX)=-L(INDEX)                FUNCTION RETURN ↵        *213
      BREF=.ABS.B (INDEX)                                        *214
      WHENEVER BREF.L.(BSAT/100.), FUNCTION RETURN               *215
      HREF=.ABS.H (INDEX)                                        *216
      M(INDEX)=44                                                *217
      WHENEVER BREF.GE.BSAT                                      *218
      THROUGH BACK 1, FOR K=2,1,K.G.44                           *219
      YCAL(INDEX,K)=BDATA(K)*L(INDEX)                            *220
      XCAL(INDEX,K)=HDATA(K)*L(INDEX)                            *221
BACK 1                                                           *222
      FUNCTION RETURN                                            *223
      END OF CONDITIONAL                                         *224
      HMAJ=TERPO.(-BREF,BDATA,HDATA,2,44,0,0)                    *225
      HFAC=2*HREF/(HREF+.ABS.HMAJ)                               *226
      THROUGH TRAN 1,FOR K=2,1,K.G.44                            *227
      HTRANS(K)=(HDATA(K)+HREF)*HFAC-HREF                        *228
TRAN 1                                                           *229
      BMAJ= TERPO.(HREF,HTRANS,BDATA,2,44,0,0)                   *230
      BFAC=2*BREF/(BREF+.ABS.BMAJ)                               *231
      THROUGH TRAN 2, FOR K=2,1,K.G.44                           *232
      BTRANS(K)=(BDATA(K)+BREF)*BFAC-BREF                        *233
TRAN 2                                                           *234
      THROUGH BACK2, FOR K=2,1,K.G.44                            *235
      XCAL(INDEX,K)=HTRANS(K)*L(INDEX)                           *236
      YCAL(INDEX,K)=BTRANS(K)*L(INDEX)                           *237
BACK 2                                                           *238
      FUNCTION RETURN                                            *239
      END OF FUNCTION                                            *240
      END OF PROGRAM                                             *241
```


ACKNOWLEDGMENTS

The authors wish to express their thanks to the United States Steel Research for the preparation of the magnetic sample and express particular appreciation to Mr. James Hale and his colleagues at Allegheny Ludlum Research for making all the very carefully conducted loss tests, the results of which are shown in this paper.

REFERENCES

1. Gillott, D. H., and Calvert, J. F., "Eddy Current Loss in Saturated Solid Magnetic Plates, Rods, and Conductors," IEEE Transactions on Magnetics, Vol. MAG-1, No. 2, June 1965.

2. Gillott, D. H., and Abrams, M. D., "Flux Penetration in Ferromagnetic Material," final report to National Science Foundation to GP-3086 (1965).

3. Gillott, D. H., and Abrams, M. D., "Flux Penetration in Ferromagnetic Material," 1966 INTERMAG Conference, Stuttgart, Germany (April 1966).

4. Gillott, D. H., and Abrams, M. D., "Determination of Minor Hysteresis Loops of Isotropic Ferromagnetic Materials," IEEE Transactions on Magnetics, Vol. MAG-1, pp. 235-6 (September 1965).

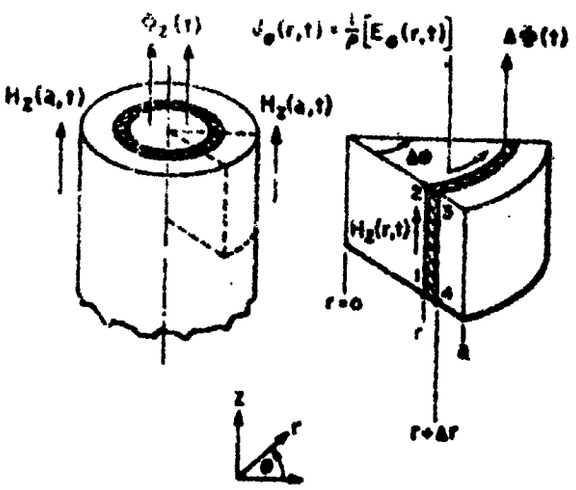

Figure 1. Geometry and field relationships of infinite cylindrical rod

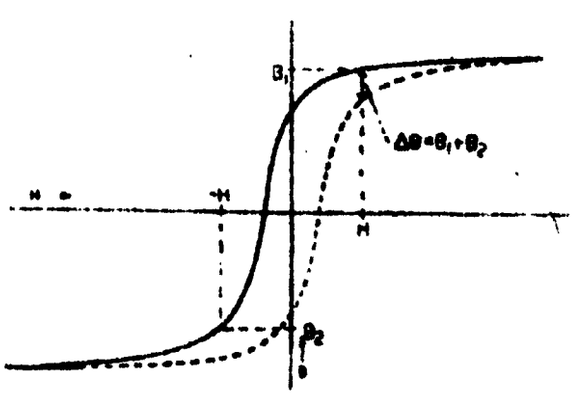

Figure 2. Numerical evaluation of the area enclosed by a hysteresis loop

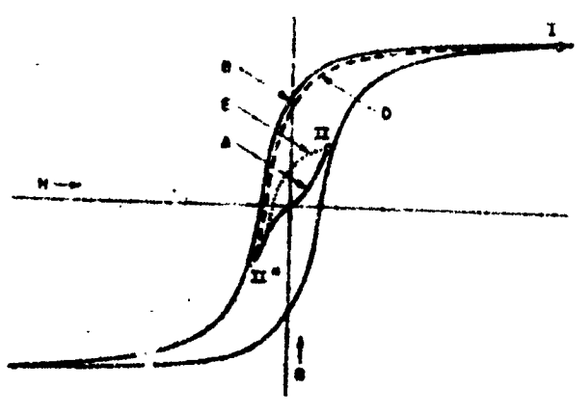

Figure 3. Determination of a minor hysteresis loop

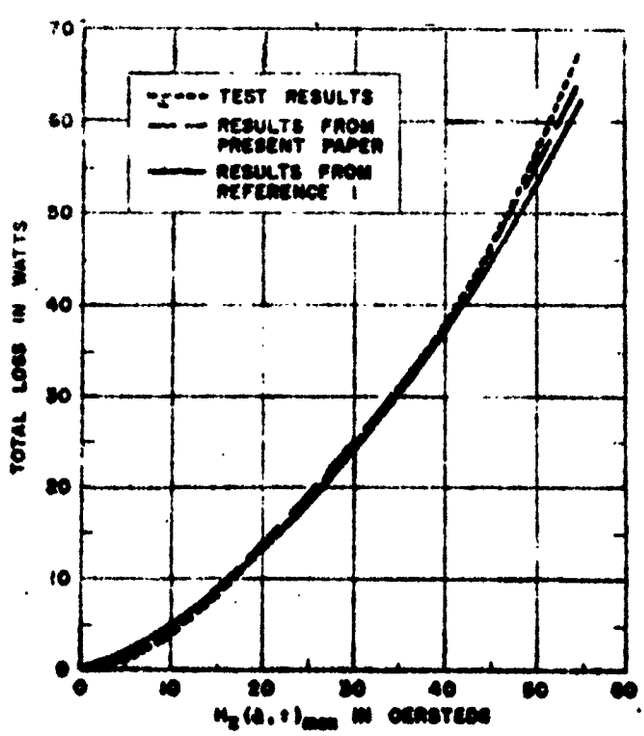

Figure 4. Comparison of calculated and experimental losses