Technical Report No. IRL-1017 April 1, 1965

THE USE OF A LOGARITHMIC AMPLIFIER IN DATA PROCESSING OF ANALOG SIGNALS

Walter E. Reynolds

GPO PRICE $ _____

CFSTI PRICE(S) $ _____

Hard copy (HC) 2.00

Microfiche (MF) .50

ff 653 July 65

FACILITY FORM 602

N66 29359 (ACCESSION NUMBER)

(THRU)

27 (PAGES)

1 (CODE)

CR-62945 (NASA CR OR TMX OR AD NUMBER)

14 (CATEGORY)

Instrumentation Research Laboratory, Department of Genetics
Stanford University School of Medicine
Palo Alto, California

[redacted]

Abstract

A number of aspects of usage of a logarithmic amplifier for data compression and low level resolution are given. These include an example of data interpretation and a derivation of error figures. An appendix contains a circuit and specifications of the logarithmic amplifier used.

THE USE OF A LOGARITHMIC AMPLIFIER IN DATA PROCESSING OF ANALOG SIGNALS

Prepared by Walter Reynolds

Technical Report No. IRL-1017 April 1, 1965

Prepared under
NATIONAL AERONAUTICS AND SPACE ADMINISTRATION
Grant NsG 81-60

"Cytochemical Studies of Planetary Microorganisms:
Explorations in Exobiology"

Principal Investigator: J. Lederberg
Program Director: E. Levinthal

[redacted]

Instrumentation Research Laboratory, Department of Genetics
STANFORD UNIVERSITY SCHOOL OF MEDICINE
Palo Alto, California

Contents

I Introduction

II Effect of Linear Error on Transmission of Logarithmic Data

III An Illustrative Example of Data Interpretation

IV Further Work Indicated

V Sources of Logarithmic Transfer Elements

Appendix A: An operating Manual for the Model 100-9 Logarithmic Amplifier

Illustrations

Figure 1. An Assumed Model of Data Transmission.

Figure 2. A Linear Recording of an Event.

Figure 3. A Logarithmic Recording of an Event.

Figure 4. An Example of a Recorded Spectrum.

1. Introduction.

Outputs of some physical and biological detection instruments contain information over a very wide range of values. In the case of a mass spectrometer this range can exceed 1 : 30,000. Visual interpretation of analog signals has a normal resolution of only 1 : 100 to 1 : 1000. Analog to digital conversions may be used, but also seldom exceed 1 : 1000. In cases where visual interpretation is made from strip chart recordings, some improvement is obtained by multiple trace recordings, each trace at a different gain so that at least one of the traces has a usable range in all points of interest. Similar digital techniques, however, are difficult and awkward.

A logarithmic data transformation can make a very useful data compression device. Such techniques have been employed here with some success and much promise. An amplifier based upon a circuit reported by J.F. Gibbons and H.S. Horn[1] has been built by the Genetics Department Instrumentation Research Laboratory, Stanford Medical School, and used there and in the Chemistry Department, Stanford University (See Addendum to this report detailing a Model 100-9 Logarithmic Amplifier.) Particular applications have included analog to digital recording of mass spectrometer data and logarithmic analog to strip chart recordings of similar data to detect very low level metastable ion phenomena. A forthcoming communication in Analytical Chemistry[2] describes the uses and advantages of logarithmic data transfer to the identification of metastable ions. In this case the useful information was at an amplitude of only 1 part in 100,000 of the peak amplitudes.

> This (logarithmic) system has been used in the author's laboratory in conjunction with an Atlas CH-4 mass spectrometer, the recording system of which suffers from the disadvantage that it requires manual attenuation in the recording of a given mass spectrum, necessitating several scans if one wishes to obtain accurate intensities of both the strong and weak peaks. This is especially true if one is trying to observe metastable ions which appear as weak broad peaks. [3]

Further, it was noted that the logarithmic plots show a considerable number of metastable peaks not apparent in linear recordings, but also produce a spectrum which is far easier to count. The logarithmic plot was

able to record all the information in one scan.

Logarithmic data transfer promises to be very useful as a prior step in analog to digital conversions for digital computer analysis of mass spectra and other similar signals. Analog to digital conversion effectively wipes out all linear low level signals that lie below the minimum analog to digital resolution. An improvement in resolution by a factor of as much 10^6 can be obtained by means of the logarithmic transformation.

II Effect of Linear Error on Transmission of Logarithmic Data.

The errors resulting from noisy handling of logarithmic analog signals are quite different from those produced by normal linear analog data processing. In this section the error expressions are derived from retrieved data. It will be shown that for large signals the error ratio is increased and that for small signals it is decreased. In all cases the error is proportional to the signal.

The logarithmic analog signal will in almost all cases be handled by some linear data transmission device. This may be a strip chart recorder, magnetic tape, meter movement, analog to digital converter or some combination of these. It is typical of this class that they have an uncertainty or error that is a constant percentage of the maximum signal processible.

The following model is assumed. An ideal logarithmic function is assumed for the amplifier and an ideal antilogarithmic output function is assumed at the output. All errors are assigned to the data transmission device.

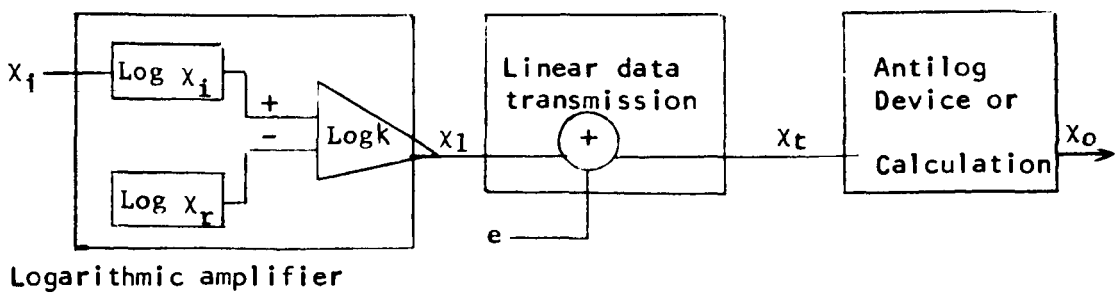

Figure 1. An assumed model of data transmission.

Logarithms are defined only for positive numbers; hence the log amplifier has an output for only positive values. Furthermore, the output of the model 100-9 log amplifier has a minimum output corresponding to roughly 1, or $x_i = x_r$. And there is a maximum limit of x, x_{max}, imposed by physical limitations of the logging amplifier. Hence the log amplifier may be used over a range of $x_r < x_i < x_{max}$. It should also be noted that the user may elect to scale his input to some x_{max} less than that of the amplifier.

The log amplifier has an output

$$x_1 = \log_b k(x_i/x_r)$$

where $\log_b k$ is a scale factor of the log amplifier. If $k = x_r$

$$x_1 = \log_b x_i$$

If $k \neq x_r$ it only applies a scale multiplier to the output and does not enter into the error analysis.

Let the dynamic range used be R, defined as $R = x_{max}/x_r$.

The output of the log amplifier will range from $\log_b kx_r$ to $\log_b kx_{max}$.

$$x_1 \max - x_1 \min = \log_b kx_r - \log_b kx_{max}$$

$$= \log_b R$$

Note that b is undefined. The output curve of the log amplifier could represent $\log x_i$ to any base. Selecting the base simply puts analog numerical values at points on the curve. R may be expressed as a ratio, decades, nepers, or octaves. For example, with $R = 10^9$, R is 9 decades, 20.7 nepers, or 29.9 octaves. Similarily $\log x_i$ may be expressed or converted to any of these quantities.

It is normal in linear data transmission devices to express noise as a fraction of the maximum signal. Following this custom and assuming that $\log_b R$ is scaled to be equal to this maximum signal,

$$e = N \log_b R$$

where N is the noise ratio of the linear data transmission device.

The output of the linear data transmission device has an output of:

$$x_t = \log_b x_i + e \qquad \text{(assumed } k = x_r\text{)}$$

$$= \log_b x_i + \log_b R^N$$

$$= \log_b x_i R^N$$

After taking antilog to base b through the antilogarithmic device,

$$x_o = x_i R^N$$

If N is small compared to R,

$$x_o = x_i \ (1 + N \ln R)$$

where ln is the natural logarithm.

Letting $x_o = x_i + e_o$ where e_o is error at the output,

$$x_i + e_o = x_i + x_i \ N \ln R$$

$$e_o = x_i \ N \ln R$$

It can be seen that the uncertainty (error) after data retrieval by the antilog operation has a value equal to a constant ratio of the input signal, x_i. And this ratio is the noise factor of the data transmission device times the natural logarithm of the allowed range of x .

An interesting value to investigate is that value for which the errors of a linear and logarithmic signal are equal. This would be the value of x_i which would produce equal uncertainty whether transmitted in linear or logarithmic form:

$$e_o = e$$

$$x_i \ N_1 \ \log R = N_2 \ x_{max}$$

where N_1 is the noise factor during the logarithmic transmission and N_2 is the noise factor during linear transmission. If indeed $\log R = x_{max}$ in the two cases, then $N_1 = N_2$.

$$\frac{x_i}{x_{max}} = \frac{1}{\ln R} \ \frac{N_2}{N_1}$$

If R is in decades ln R is approximately 2.3 R.

$$x_1/x_{max} = (1/2.3R)\ (N_2/N_1)$$

Therefore, for a value of x_1 below that given by the above equation, the accuracy of the retrieved values of x_1 is improved by logarithmic processing, and for values above that the accuracy decreases.

The following example illustrates these points: the linear transmitting device is a strip recorder with an accuracy given as 0.2% of full scale, 5 inches. x_r was selected as 1 mv and set at 1 inch.

N_1 calculated as a ratio over the 4 inches used is

$$N_1 = .002\ (5/4)$$

$$= .0025$$

R over this same range is 4 decades = 10^4. ln r = 9.2

x_{max} then is 1 mV x 10^4 = 10 volts

Error ratio of retrieved data is then

$$N_1 \ln R = .0025 \times 9.2 \qquad \text{or } 2.3\% \text{ at any amplitude.}$$

The point of equivalent error as compared with linear chart recording can be found. If x_{max} of the linear recording is 5 volts, then

$$N_2 = .001 \quad \text{referred to 10 inches full scale (10 volts)}$$

$$x_1 = \frac{1}{9.2} \times \frac{.002}{.0025} \times 10 = .44 \text{ volt}$$

Figures 2 and 3 illustrate what may be expected. Figure 2 is a linear recording of an event. At the right are plotted values of expected uncertainty. Figure 3 is the recording on the same recorder of a logarithmic signal with, again, the expected uncertainty. By comparing Figure 2 with Figure 3 it can be seen that e_o has the same value on both plots at .44 volts. Also e_o/x_1 has the same value at .44 volt. At signal points above this voltage the linear recording can be expected to have greater accuracy. For signal points lower than .44 volts greater accuracy can be expected with the logarithmic processing.

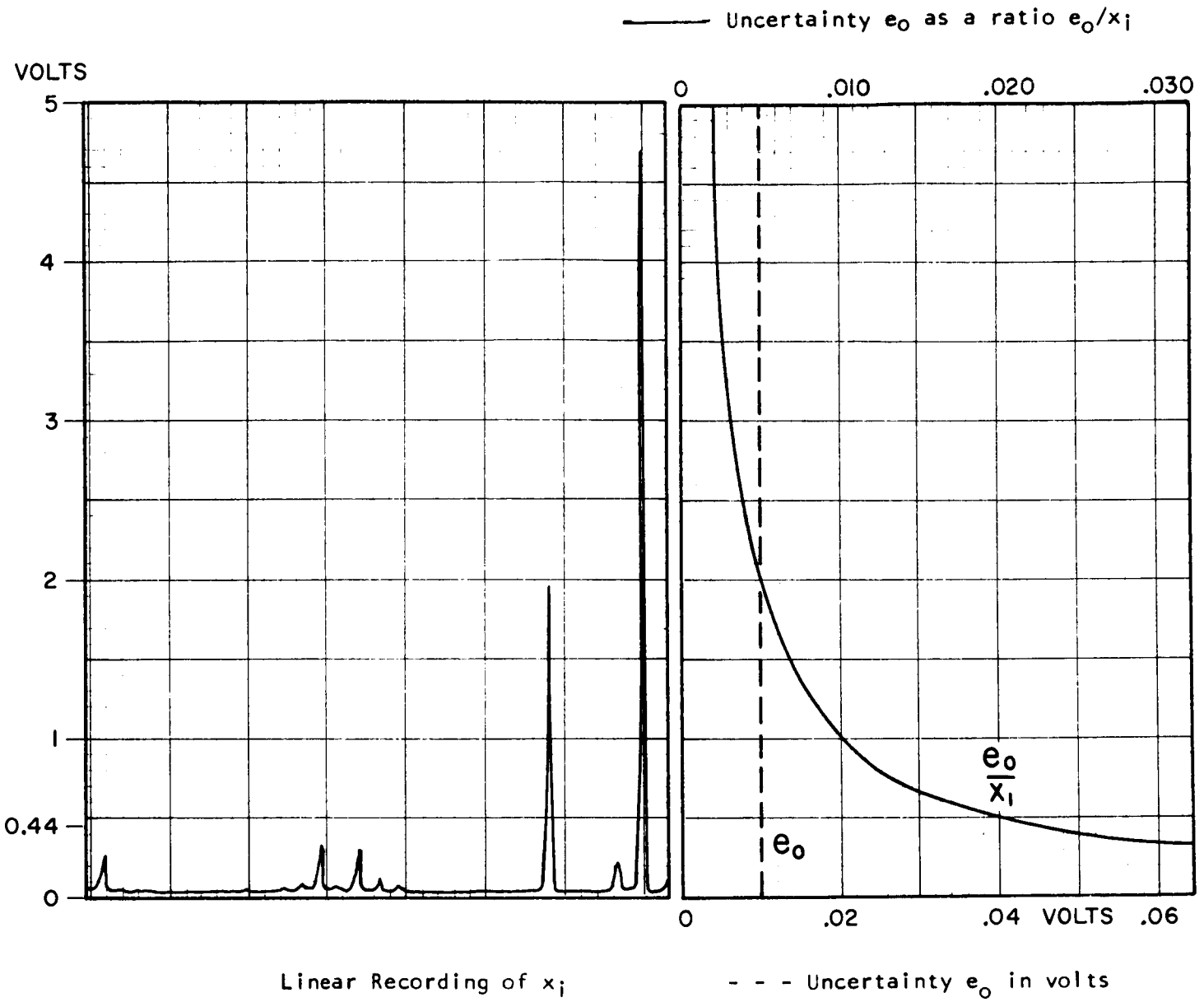

Figure 2. A linear recording of an event. Recorded on a 5" chart with an accuracy of 0.2% full scale. The curves at the right plot this uncertainty as a function of the signal.

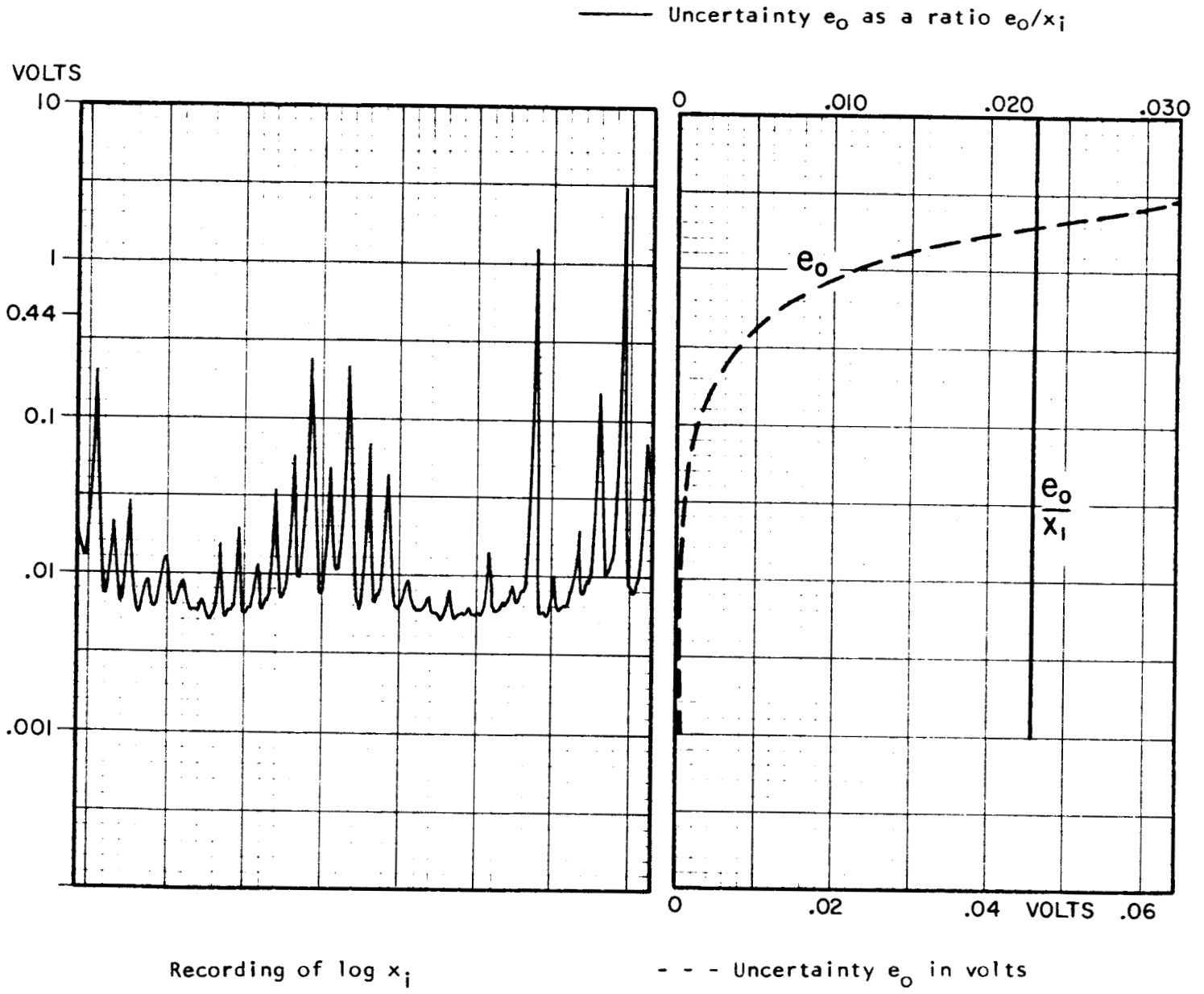

Figure 3. A logarithmic recording of a similar event to that of Figure 1. This is the recording of log x_i. The curves at the right plot uncertainty as a function of the logarithmetic signal amplitude.

(Note: Figure 2 and 3 are of similar, but not identical, signals.)

III An Illustrative Example of Data Interpretation.

Figure 4 is a reproduction of a logarithmic plot from a mass spectrometer. This has much usable information, but is also a severe example of an effect a logarithmic amplifier will accentuate: "drifting base line" in the signal. The very high resolving power of the logarithmic amplifier at very low signal levels will make what was an otherwise acceptable zero drift appear to be a major portion of the signal. However, upon careful examination it will be seen that no information is actually lost.

The "drifting base line" deserves some special explanation and evaluation. The signal of Figure 4 is from an amplifier on a mass spectrometer that has a 0 to 20 V dc output range. The amplitude of the signal between well defined peaks is theoretically zero, but some drift is inevitable. Only the amount of drift is subject to criticism or perhaps engineering improvement. Since this signal was normally recorded in a linear manner at about 0 to 5 V range, a drift of 0.1%, or 5 mV, would probably be acceptable. The instrument would be adjusted so that this drift was plus or minus about zero.

If this signal is to be processed through a logarithmic amplifier, other considerations must be made. The log of a negative number is undefined and the log of zero is minus infinity. Both lie out of the range of physical realization by an amplifier. The logarithmic amplifier used has a number of reference settings, from 1 μV to 10 mV. When set at a particular reference, only signals between that reference and the upper input limit of the amplifier give meaningful output. Signals below the reference are lost in negative saturation (actually a tolerance of about .5 to .7 of the reference is permitted, giving an output of about .8 as a minimum.)

To insure that the signal to the logarithmic amplifier is never negative, it is recommended that the zero set of the signal be offset in the

positive direction so that the lower excursions of the signal remain within the allowable limits of the logarithmic amplifier; i.e., above the reference selected. Since this can be as low as 1 μV, this "offset positive" can be almost arbitrarily low. In fact it turns out that the logarithmic amplifier is by far more sensitive to detection near zero than any other detector used normally on such systems, and hence the "offset positive" can be nearer zero than supposed zero settings using linear detectors.

The Model 100-9 logarithmic amplifier has "Reference" and "Scale" settings; with these, an output corresponding to log (signal/reference = 1) and log (signal/reference = 10^n) may be obtained. In Figure 4, the recorder was adjusted so that reference (1 mV) was set at 1 inch; log 10, or one decade (10 mV) was set at 2 inches; two decades at 3 inches, etc.

Conveniently, this has now scaled the chart so that the inches, expressed in decimal form $\pm$ from the first inch level, are the logarithm to the base 10 of the amplitude divided by the reference. The "zero drift" can be seen to begin at about 1 mV ($\log_{10}^{-10}$ 0.65) = 4.4 mV. This drifts downward until it passes below the reference and then rises to about 10 mV.

Examples of calculation of peak amplitude (all values expressed in mV):

Peak amplitude of "A" = antilog 1.58 - antilog .55

= 38 (peak) - 3.5 (zero offset)

= 34.5

Others are:

"B" = antilog 2.29 - antilog .48 = 195 - 3 = 192

"C" = antilog 3.57 - antilog .70 = 3720 - 5 = 3715

"D" = antilog .84 - antilog .0 = 6.9 - 1 = 5.9

"E" = antilog .94 - ? = 8.7 ? = 8.7
Information about zero line is lost.

"F" = antilog 3.28 - antilog 1.0 = 1910 - 10 = 1900
The local rise in base line here appears to be lack of resolution between peaks within the spectrometer.

"G" = antilog 1.23 - antilog 1.02 = 17.0 - 10.5 = 6.5

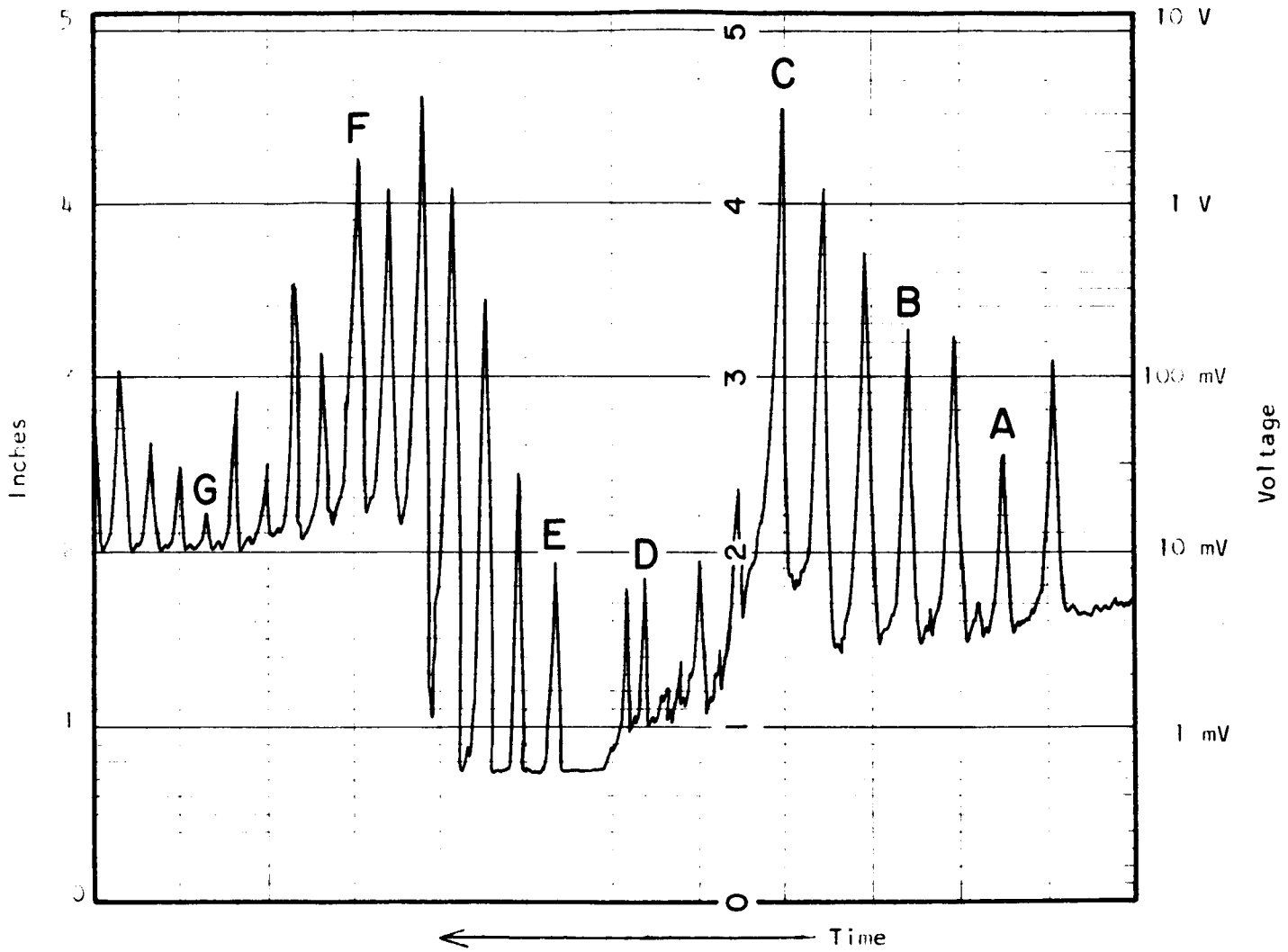

Figure 4. An example of a recorded spectrum.

It was shown in Section II that the uncertainty due to errors in the data transmission would be a constant percentage of the signal. In this case the recording and reading back of the signal on a strip chart recorder would be the data transmission. Assuming a .5% accuracy of full scale inches of the chart, N = .005. The range is five decades or 10^5; $\ln 10^5 = 11.5$. The uncertainty is then n lnR = 5.75%.

A summary of the above values with expected uncertainty versus the expected uncertainty in linear recording is informative:

Peak	Amplitude mV	Expected uncertainty with log transmission mV	percent	Expected uncertainty with linear transmission mV	percent
A	34.5	2.0	5.8 %	25	73.0 %
B	192.0	11.0	5.8 %	25	13.0 %
C	3715.0	212.0	5.8 %	25	.7 %
D	5.9	0.3	5.8 %	25	425.0 %
E	8.7	0.5	5.8 %	25	285.0 %
F	1900.0	108.0	5.8 %	25	1.3 %
G	6.5	0.4	5.8 %	25	390.0 %

IV Further Work Indicated.

The signal of Figure 4 was an example of very severe base line drift, and is not supposed to be an example of a desirable signal; however, the problem does exist to some extent with any real analog signal. In general it may be said that use of the logarithmic amplifier with signals that have base line drift does not result in the loss of any information, but base line drift does limit the usefulness of the logarithmic amplifier to resolve very small signals.

Further work is being done to investigate the possibility of using the logarithmic amplifier itself to detect base line drift and to generate an appropriate error signal. Then this error signal could control a dc bias applied to the original signal to drive the base line to a preselected reference.

V Sources of Logarithmic Transfer Elements.

The amplifier described in Appendix A uses a Fairchild FSP-30 PNP silicon transistor as the logarithmic element. This is employed as described in reference (1).

Other commercial elements are available. Nexus Research Laboratory, Inc., Canton, Massachusetts has a Type LGR-6 Logarithmic Ratio Module. George A. Philbrick Researches, Inc., Boston, Massachusetts, has a type PL1 module and others under development.

Principle manufacturers of oscilloscopes and x-y recording equipment are known to be developing instruments with electronic logarithmic conversions. It is expected that such instruments, with visual logarithmic displays, will soon be announced as commercially available.

A P P E N D I X

References

1. Gibbons, J.F. and H.S. Horn; A Circuit with Logarithmic Transfer Response Over 9 Decades. IEE Trans of Circuit Theory Group. CT-11, September, 1964.

2. Alpin, R.T., H. Budzikiewicz, H.S. Horn and J. Lederberg; Logarithmic Recording of Mass Spectra, Especially Peaks from Metastable Ions. To be published in Anal. Chem., early summer 1965.

3. Ibid.

4. Lederberg, J.; An Instrumentation Crisis in Biology. NASA Status Report through April 1, 1963: "Cytochemical Studies of Planetary Microorganisms, Explorations in Exobiology"

AN OPERATING MANUAL FOR THE MODEL 100-9

LOGARITHMIC AMPLIFIER

SPECIFICATIONS

The Model 100-9 logarithmic amplifier will give an output of log $x_{input}/x_{ref.}$. $X_{ref.}$ is manually selectable from 100 pA to 1 μA in decade steps. The output is usable over an input range in excess of 8 decades.

Power requirements: Nominal 110 V ac or 220 V ac, selected by a safety strapped switch on the chassis. 60 cps.

Useful and permissable input limits:

Minimum: 70×10^{-12} A (70 pA) or +0.7 μV at the input. (Smaller voltages or negative values to -10 V are permissable, but will give no useful output.)

Maximum: 10×10^{-3} A (10 mA) or 100 V at the input.

Input Impedence: 10 kilohms.

Output (Two levels are provided):

Low: Output #1.
Range 0.5 to 10 mV.
Output impedance 10 ohms
Minimum recommended load, 50 kilohms

High: Output #2.
Range 0.1 to 2 V.
Output impedance 6 ohms.
Minimum recommended load, 50 kilohms.

Noise: Less than 2.5 μV at the input.

Reference levels internally generated and manually selectable:

Current:	Voltage equivalent:
100 pA	1 μV
1 nA	10 μV
10 nA	100 μV
100 nA	1 mV
1 μA	10 mV

RESPONSE TIME

The response time of the logarithmic amplifier is decidedly non-linear. In general, the response time is inversely proportional to the input signal level. Rise time is faster than fall time. During the response to a positive step input the amplifier is going from a slow response area to a faster response. The converse is true for a negative step input.

Time Constant:

Below a certain value of input current (approximately 1.3 μA), the principal time constant, T, is inversely proportional to input current:

$T = 1.8\ \mu sec$ $\qquad I_{in} > 1.3\ \mu A$

$T = \frac{2.4 \times 10^{-11}}{I_{in}}\ sec$ $\qquad I_{in} < 1.3\ \mu A$

Representative values are:

I_{in}	T
1 mA	1.8 μsec
1 μA	24 μsec
1 nA	2 400 μsec

Measured rise and fall times:

Certain rise times and fall times were measured and are recorded below. An attempt was made to follow the 10-90 convention in recording these times. Unfortunately, this became difficult - if not impossible - to do and still retain any useful information with the logarithmic conversion. The levels used and their relationship are illustrated in Figure 1.

Time is given in microseconds between the indicated points on a normalized 1.00 pulse.

Range of Input Current Step	Rise Time	Fall Time	Rise Time	Fall Time
	Output .04 to .96 (Input .01 to .90)	Output .96 to .04 (Input .90 to .01)	Output .28 to .96 (Input .10 to .90)	Output .96 to .28 (Input .90 to .10)
(One decade pulse:)	----------Time in microseconds----------			
1.0 to/from 10	16.	75.	14.	24.
0.1 to/from 1.0	160.	750.	140.	240.
0.01 to/from 0.1	1600.	approx.8000	1400	approx.3000
	Output .04 to .96 (Input 0.002 to .83)	Output .96 to .04 (Input .83 to 0.002)	Output .28 to .96 (Input .054 to .83)	Output .96 to .28 (Input .83 to .054)
(Two decade pulse:)				
0.1 to/from 10	25.	1400.	20.	280.

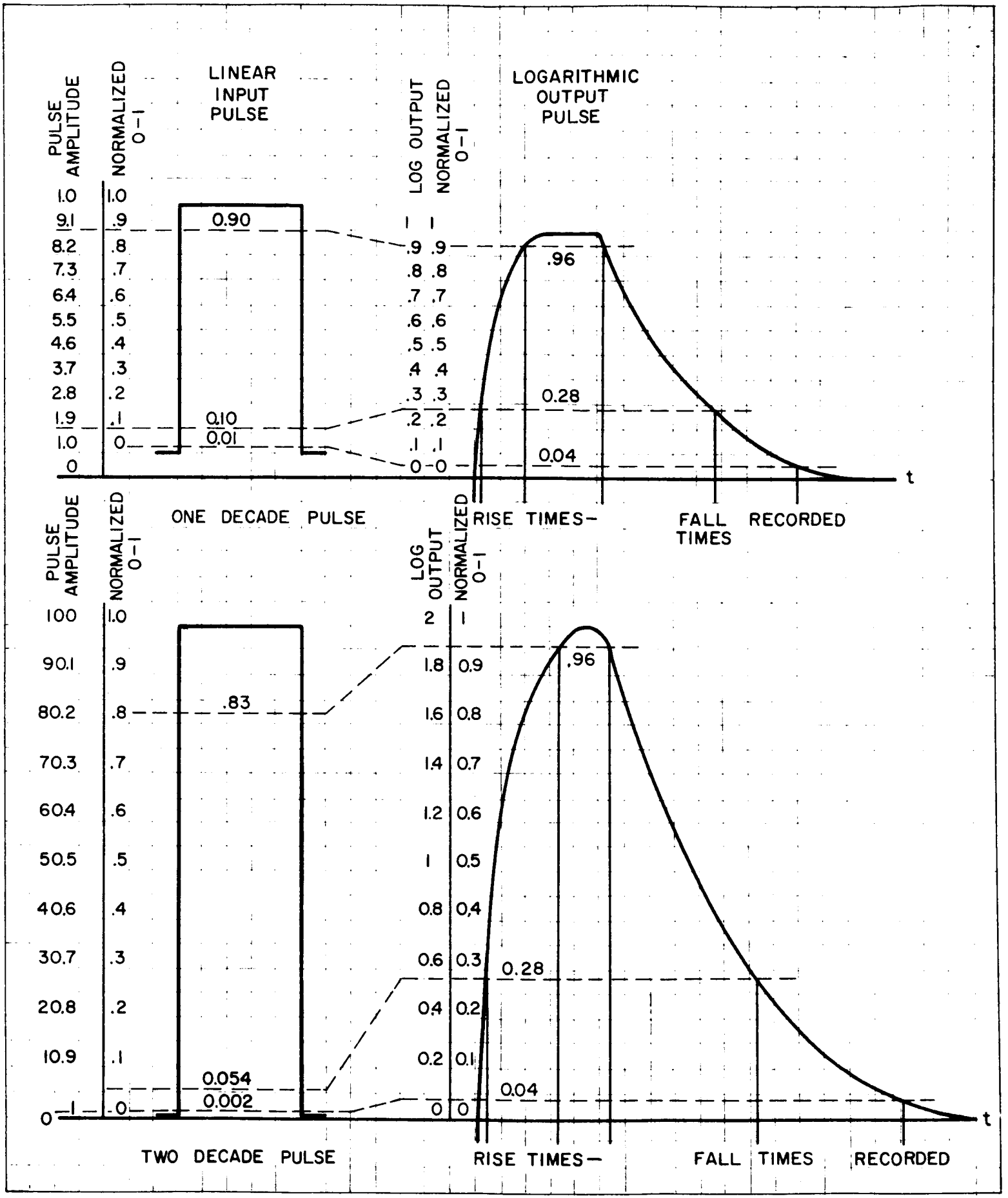

FIG. 1
POINTS OF MEASUREMENT FOR RISE TIMES AND FALL TIMES

OPERATING INSTRUCTIONS

1. Turn the Reference selector switch to 10 nA or higher range.

2. Connect the instrument to a power source of 110 or 220 V, as pre-selected by the internal power selector switch. (If this switch is placed in the 220 V position, be sure to engage the safety strap to make it impossible to inadvertently turn the switch to 110 V.)

3. Check that the ON-OFF indicator light is out. Press the ON-OFF switch to extinguish it if necessary.

4. Connect the signal source to the Input Jack at the rear.

5. Connect the #1 or #2 Output Jack to the recording or sensing system being used. Select #1 or #2 according to level of output desired. See Specifications.

6. Press the ON-OFF switch to turn the power on. The indicator light will come on.

7. After three to five minutes, to allow the circuits to stabilize, turn the Operate-Balance-Scale switch to BALANCE. The output of the amplifier now corresponds to $\log_{10}(1)$, or the output that would result in normal operation if the input signal equaled the reference selected (see step 10). This output reference level should be noted on the recorder or other sensing device used. If a strip chart recorder is used, it is often desirable to adjust the recorder so that this value, the output reference level, falls on a pre-selected base line.

8. Turn the Operate-Balance-Scale switch to SCALE and the Reference switch to 1 μA. The output of the amplifier will now be $\log_{10}(10)$. The indication of this output should again be noted, as this will be the scale factor of one decade above the output reference level of step 7. Again, with a recorder it will be helpful to adjust the gain of the recorder so that this is a pre-selected amount above the base line chosen in #7. Turning the REFERENCE switch to 100 nA and 10 nA will give outputs of log 100 and log 1000, respectively.

9. If adjusting the gain and zero set of a recorder, repeat steps #7 and #8 until readings give the desired base line value and scale.

10. Select the input reference desired for operation by the position of the REFERENCE switch. Turn the Operate-Balance-Scale to Operate. Table 1 will be useful in selecting the reference desired and interpreting the range being used.

11. Adjust the nominal zero level of the signal being observed to, or just above, the reference selected. (If the signal drops to below this point

INITIAL CALIBRATION ADJUSTMENT

WARNING The REFERENCE selector switch must be in the high ranges, 10 nA, 100 nA, or 1 μA, when turning the Logarithmic Amplifier main power switch to ON or OFF.

Adjustments:

a. Connect load that will be driven by amplifier. (This may be omitted if the normal load is over 100 kilohms.)

b. With the Operate-Balance-Scale (O-B-S) switch set to BALANCE, adjust the potentiometer on the chassis back of the output meter to obtain a voltage of + 0.1 V at tie point number one (TP#1) on terminal board number one (TB#1). Use an external voltmeter.

c. With the O-B-S switch still set to BALANCE, adjust the trimpot on TB#1 to obtain a meter reading on the output meter of 0.0. This corresponds to 0.2 V at Output #2 and the log of 1.0.

d. Scale Factor checks. With the O-B-S switch set to SCALE, readings of the output meter and at the outputs should be:

Setting of REFERENCE	Output meter reading	Volts at Output #1	Volts at Output #2	Represents:
1 nA	4.0	5.0 mV	1.0 V	4 decades
10 nA	3.0	4.0 mV	0.8 V	3 decades
100 nA	2.0	3.0 mV	0.6 V	2 decades
1 μA	1.0	2.0 mV	0.4 V	1 decade

The outputs in (d) above are useful in calibrating a strip chart recorder or other data transmission devices used in conjunction with the logarithmic amplifier.

TABLE 1

Input Signal Voltages* for Observed Logarithmic Amplifier Outputs and Reference Settings

Meter Indication	#1 Low Output	#2 High Output	Reference Setting				
			100 pA	1 nA	10 nA	100 nA	1 μA
9	10	2.0		Corresponding Input Signal Voltage in Volts.			
8	9	1.8	100				
7	8	1.6	10	100			
6	7	1.4	1	10	100		
5	6	1.2	10^{-1}	1	10	100	
4	5	1.0	10^{-2}	10^{-1}	1	10	100
3	4	.8	10^{-3}	10^{-2}	10^{-1}	1	10
2	3	.6	10^{-4}	10^{-3}	10^{-2}	10^{-1}	1
1	2	.4	10^{-5}	10^{-4}	10^{-3}	10^{-2}	10^{-1}
0	1	.2	10^{-6}	10^{-5}	10^{-4}	10^{-3}	10^{-2}
				Reference			
	Amplifier is clamped at a minimum ≈0.6 x reference.						
-1	0	0.0					

* Signal current inputs are the above voltage figures x 10^{-4}.

there is no way by observing the output of the logarithmic amplifier to determine whether the signal is indeed at zero or some negative level.)

A convenient way to adjust the zero set or balance adjustment of the external signal source is to observe the meter on the logarithmic amplifier. The nominal zero level should cause the meter to indicate as close to zero - but not less than zero - as is possible. At an indication of zero, the signal is equal to the reference, but at an indication of less than zero the signal is something less than the reference, and may be considerably negative. At a meter indication of 1, the signal is 10 times the reference; at a meter indication of 2, the signal is 100 times the reference, etc.

Often it will be found that the optimum adjustment of the signal level zero, and the reference chosen, is to select the lowest reference that still allows the zero set on the observed signal to control the nominal zero so that the log amplifier meter indication will remain between 0 and 1.

12. The system is now ready for use. Section III of the report, "The Use of a Logarithmic Amplifier in Data Processing of Analog Signals", by Walter Reynolds, March 9, 1965, gives an example of how to interpret the results from a chart recording. Table 2 is a useful table of antilogarithms.

13. To turn off the amplifier, set the REFERENCE switch to 10 nA or higher. Press the On-Off switch. The indicator light in the On-Off switch will go out.

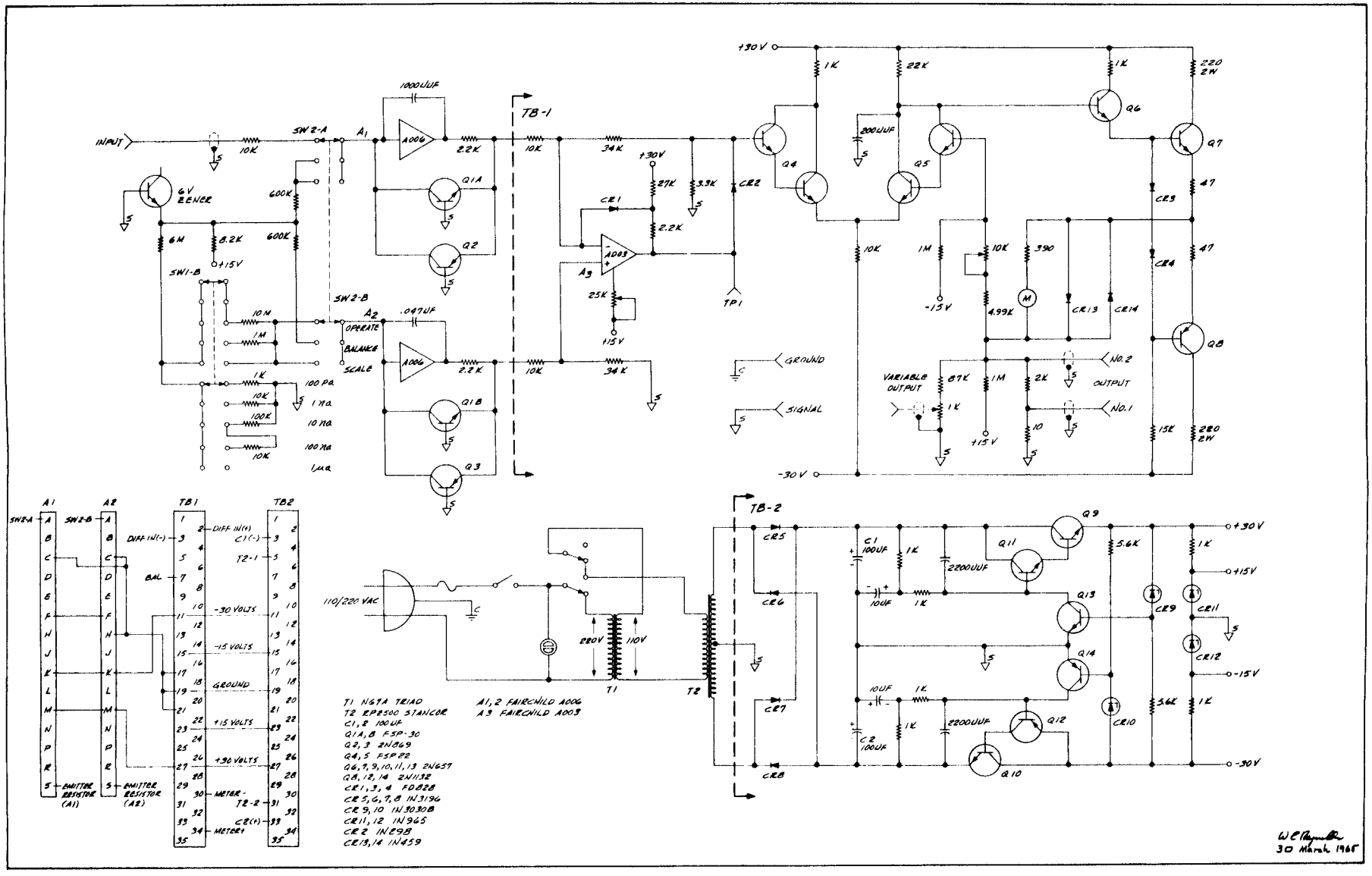

Figure 2 - Logarithmic Amplifier

COMMON ANTILOGARITHMS

LOG	ANTILOG:		LOG	ANTILOG:		LOG	ANTILOG:		LOG	ANTILOG:	
	--0	--5		--0	--5		--0	--5		--0	--5
.00	100	101	.25	178	180	.50	316	320	.75	562	569
.01	102	104	.26	182	184	.51	324	327	.76	575	582
.02	105	106	.27	186	188	.52	331	335	.77	589	596
.03	107	108	.28	191	193	.53	339	343	.78	603	610
.04	110	111	.29	195	197	.54	347	351	.79	617	624
.05	112	114	.30	200	202	.55	355	359	.80	631	638
.06	115	116	.31	204	207	.56	363	367	.81	646	653
.07	117	119	.32	209	211	.57	372	376	.82	661	668
.08	120	122	.33	214	216	.58	380	385	.83	676	684
.09	123	124	.34	219	221	.59	389	394	.84	692	700
.10	126	127	.35	224	226	.60	398	403	.85	708	716
.11	129	130	.36	229	232	.61	407	412	.86	724	733
.12	132	133	.37	234	237	.62	417	422	.87	741	750
.13	135	136	.38	240	243	.63	427	432	.88	759	767
.14	138	140	.39	245	248	.64	437	442	.89	776	785
.15	141	143	.40	251	254	.65	447	452	.90	794	804
.16	145	146	.41	257	260	.66	457	462	.91	813	822
.17	148	150	.42	263	266	.67	468	473	.92	832	841
.18	151	153	.43	269	272	.68	479	484	.93	851	861
.19	155	157	.44	275	279	.69	490	495	.94	871	881
.20	158	160	.45	282	285	.70	501	507	.95	891	902
.21	162	164	.46	288	292	.71	513	519	.96	912	923
.22	166	168	.47	295	299	.72	525	531	.97	933	944
.23	170	172	.48	302	305	.73	537	543	.98	955	966
.24	174	176	.49	309	313	.74	550	556	.99	977	989

Table 2. A Table of Common Antilogarithms.