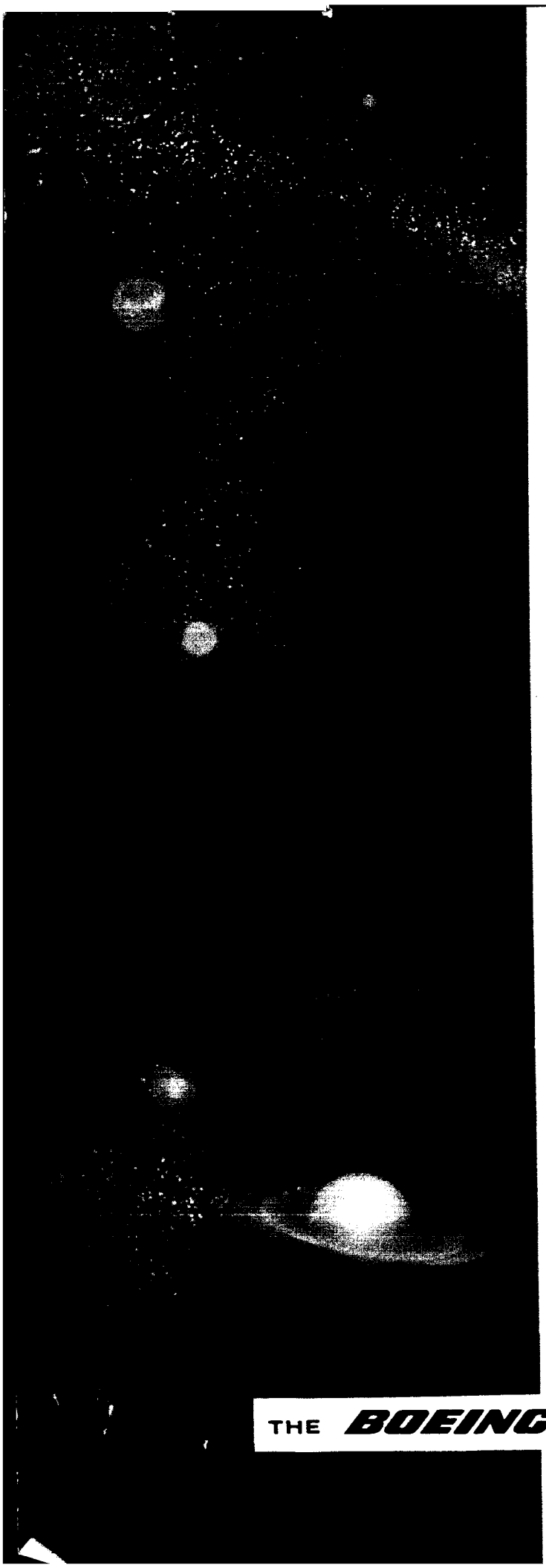

D5-13268-3

GPO PRICE $ _____

CFSTI PRICE(S) $ _____

Hard copy (HC) 6.00

Microfiche (MF) 1.25

ff 653 July 65

FACILITY FORM 602

| | |
|---|---|
| N66 31360 (ACCESSION NUMBER) | (THRU) |
| 223 (PAGES) | 1 (CODE) |
| CR-76408 (NASA CR OR TMX OR AD NUMBER) | 11 (CATEGORY) |

# VOLUME III - APPENDIX A
# LABORATORY DATA

# FINAL REPORT — RESEARCH ON PASSIVE INSTRUMENTATION AND STIMULI GENERATION FOR SATURN IB EQUIPMENT CHECKOUT

THE BOEING COMPANY • SPACE DIVISION

# RESEARCH ON
# PASSIVE INSTRUMENTATION AND STIMULI GENERATION
# FOR SATURN IB EQUIPMENT CHECKOUT

D5-13268-3

FINAL REPORT
APPENDIX A
LABORATORY DATA

May 31, 1966

Contract NAS8-20090
George C. Marshall Space Flight Center
National Aeronautics and Space Administration

THE BOEING COMPANY
Launch Systems Branch
Huntsville, Alabama

# Passive Instrumentation and Stimuli Generation For Saturn IB Equipment Checkout

Period of Performance: 26 June 1965 - 31 May 1966

Henry N. Kaushagen
Director
Advanced Electronic System Unit

Kenneth L. Skinner
Technical Supervisor

Study Team

S. R. Nelson
R. H. Alexander
R. J. Fortier
W. L. Heintschel
M. J. Judge
C. C. King
D. Q. Krebs
R. S. Trumbull

Distribution List
Contract NAS8-20090 Final Report

Huntsville - Internal

| | | | |
|---|---|---|---|
| Library | 5-9095 | AC-01 | 1 copy |
| *J. M. Miller | 5-9820 | AN-58 | 30 copies |

Huntsville - Contract Administration

| | | | |
|---|---|---|---|
| R. J. Presto | 5-9030 | AB-34 | 20 copies (Plus 1 reproducible master (vellum) for delivery to MSFC) |

New Orleans

| | | | |
|---|---|---|---|
| Library | 5-7116 | LS-06 | 1 copy |

*To make 5-9800 internal distribution

## ABSTRACT

This document is Volume 3, Appendix A, Laboratory Report, of the Final Technical Report of the Passive Instrumentation and Stimuli Generation for Saturn IB Equipment Checkout study for the George C. Marshall Space Flight Center, National Aeronautics and Space Administration, Huntsville, Alabama, under Contract NAS8-20090.

The final technical report consists of four volumes:

| | |
|---|---|
| D5-13268-1 | Summary Technical Report |
| D5-13268-2 | Detailed Technical Report |
| D5-13268-3 | Appendix A, Laboratory Report |
| D5-13268-4 | Appendix B, Instrument Unit Data Sheets |

# TABLE OF CONTENTS


| | Page |
|---|---|
| ABSTRACT | A-i |
| CONTENTS | A-ii |
| FOREWORD | A-iii |
| INTRODUCTION | A-iv |
| SECTION 1 | |
| OPTOELECTRONIC DEVICE EVALUATION | A-1 |
| Data Set 1 | A-25 |
| Data Set 2 | A-32 |
| Data Set 3 | A-37 |
| Data Set 4 | A-42 |
| Data Set 5 | A-47 |
| Data Set 6 | A-51 |
| Data Set 7 | A-59 |
| Data Set 8 | A-63 |
| Data Set 9 | A-67 |
| Data Set 10 | A-71 |
| Data Set 11 | A-76 |
| SECTION 2 | |
| FIBER OPTIC EVALUATION APPLICATION | A-78 |
| Data Set 1 | A-81 |
| Data Set 2 | A-86 |
| Data Set 3 | A-88 |
| SECTION 3 | |
| OPTOELECTRONICS DEVICE APPLICATIONS | A-97 |
| Data Set 1 | A-100 |
| Data Set 2 | A-109 |
| Data Set 3 | A-122 |
| Data Set 5 | A-134 |
| SECTION 4 | |
| TEST FIXTURES FOR OPTOELECTRONIC DEVICE EVALUATION | A-139 |
| SECTION 5 | |
| HALL EFFECT AND MAGNETORESISTOR SENSORS | A-144 |
| SECTION 6 | |
| RESONANT BEAM AND ULTRASONIC FLOWMETERS | A-188 |

# FOREWORD

This document is a technical report for a study of Passive Instrumentation and Stimuli Generation Techniques for Saturn Equipment Checkout conducted by The Boeing Company, from June 26, 1965 to May 31, 1966, for the Quality and Reliability Assurance Laboratory, George C. Marshall Space Flight Center, NASA. The purpose of the study was to perform an extensive investigation of passive techniques and methods of application to the Saturn Instrument Unit, define appropriate passive techniques, define the types of components that the techniques should be adapted to, determine methods of coupling into and out of a component or a system, and define the stimuli generation and response evaluation equipment. The systems of the Saturn Instrument Unit were used for detailed investigation as being representative of the types of space vehicle systems to which passive techniques should be applied.

Passive instrumentation and stimulus generation techniques are defined for the purposes of the study, as "those techniques for passively introducing stimuli and extracting responses from vehicle systems without impairing, altering, or affecting the system operation."

Limited experimental work was performed in the laboratory during the course of the study to verify several of the more promising techniques.

Included in the study report are conclusions and recommendations for future activity. Although the study was conducted for the Saturn-IB Instrument Unit, the techniques apply equally as well to the Saturn V Instrument Unit.

# INTRODUCTION

Appendix A to the final technical report on the Passive Instrumentation and Stimuli Generation for Saturn S-1B Equipment Checkout Study consists of photographs of equipment tested and laboratory setups, curves, graphs, and vendor data in support of the laboratory experiments discussed in Volume II, Section 3.0 of this report and information on operation of special test devices and fixtures.

Appendix A is organized in six sections. Sections 1.0 through 4.0 support the four basic parts of the Optoelectronic Experiment.

The titles of the six sections of Appendix A are:

| | |
|---|---|
| Section 1 | Optoelectronic Device Evaluation |
| Section 2 | Fiber Optic and Solid Light Pipe Investigation |
| Section 3 | Optoelectronic Device Applications |
| Section 4 | Test Fixture for Optoelectronic Device Evaluation |
| Section 5 | Hall Effect and Magnetoresistor |
| Section 6 | Ultrasonic and Resonant Beam Flowmeter |

# SECTION 1

# OPTOELECTRONIC DEVICE EVALUATION

# APPENDIX A

## OPTOELECTRONIC DEVICE EVALUATION

A number of optoelectronic emitters and sensors in addition to the combination unit (emitter and sensor in one package) were used in this evaluation. The following chart shows the location of data for each device.

| EMITTER | IN 2175 DATA SET NO. | SENSOR LSX-600 DATA SET NO. | FF-600 DATA SET NO. |
|---|---|---|---|
| T1X L01 | SET 1 | SET 5 | |
| T1X L02 | SET 2 | SET 6 | |
| LED-11 | SET 3 | SET 7 | SET 10 |
| L12-3 PINLITE | SET 4 | SET 8 | |
| L12-12 PINLITE | SET 4 & 9 (A.C.) | SET 8 | |
| CK1116 RAYSISTOR | DATA SET 11 | | |

## LIST OF DEVICES TESTED

| PART NUMBER | CATEGORY | MANUFACTURER |
|---|---|---|
| T1X-L01 | DIODE SOURCE | TEXAS INSTRUMENTS |
| T1X-L02 | DIODE SOURCE | TEXAS INSTRUMENTS |
| LED-11 | DIODE SOURCE | GENERAL ELECTRIC |
| L12-3 | INCANDESCENT SOURCE | PINLITES INC. |
| L12-12 | INCANDESCENT SOURCE | PINLITES INC. |
| IN-2175 | SILICON LIGHT SENSOR | TEXAS INSTRUMENTS |
| LS-600 | SILICON LIGHT SENSOR | TEXAS INSTRUMENTS |
| FF-600 | PHOTO-SENSITIVE FET | CRYSTALONICS INC. |
| 4301 | PHOTON COUPLED ISOLATOR | hp ASSOCIATES |
| CK1116 | LIGHT SOURCE & SENSOR | RAYTHEON |
| B18036 | FIBER OPTIC | DONNER ELECTRONICS INC. |
| E11636 | FIBER OPTIC | DONNER ELECTRONICS INC. |

# TYPE TIXL01
# P-N PLANAR GALLIUM ARSENIDE DIODE LIGHT SOURCE

TYPE TIXL01
BULLETIN NO. DL-S 457272, FEBRUARY 1968

## DESIGNED TO EMIT NEAR-INFRARED LIGHT WHEN FORWARD BIASED

- Light Source Spectrally Matched to Silicon Sensors
- Recommended for Application in Character Recognition, Tape and Card Readers, and Encoders
- Unique Package Design Allows for Matrix Assembly Directly into Printed Circuit Boards
- Narrow Light Beam

### mechanical data

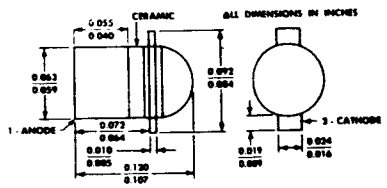


4 TIMES ACTUAL SIZE

### absolute maximum ratings

| | |
|---|---|
| Reverse Voltage at 25°C Case Temperature | 2 v |
| Forward Current at 25°C Case Temperature (See Note 1) | 50 ma |
| Operating Case Temperature Range | −65°C to +125°C |
| Storage Temperature Range | −65°C to +150°C |
| Soldering Temperature (3 minutes) | 240°C |

### electrical characteristics at 25°C case temperature

| PARAMETER | | TEST CONDITIONS | MIN | TYP | MAX | UNIT |
|---|---|---|---|---|---|---|
| $\lambda$ | Wavelength at Peak Emission | $I_F = 50$ ma | | 0.9 | | μ |
| $P_O$ | Radiant Power Output Into 90° Circular Cone | $I_F = 50$ ma, See Note 2 | 50† | | | μw |
| $P_O$ | Radiant Power Output Into 10° Circular Cone | $I_F = 50$ ma, See Note 3 | 3 | | | μw |
| $V_F$ | Static Forward Voltage | $I_F = 50$ ma | | | 1.3 | v |
| $C_T$ | Total Capacitance | $V = 0, f = 1$ Mc | | | 75 | pf |

NOTES: 1. Derate linearly to 125°C case temperature at the rate of 0.5 ma/C°.
2. The radiant power output into a 90° right circular cone coaxial with the device axis of symmetry is measured by use of a calibrated silicon solar cell held in close proximity to the glass lens of the device.
3. The radiant power output into a 10° circular cone coaxial with the device axis of symmetry is measured by use of a calibrated silicon solar cell which is covered by a 0.175 cm aperture. The measurement is made with an aperture mounted coaxial with the device axis of symmetry and with the solar cell surface at a distance of 1.00 ± 0.05 cm from the device lens surface.

†This power is equivalent to approximately $2.25 \times 10^{14}$ photons per second at 0.9 microns.

PRELIMINARY DATA SHEET: Supplementary data will be published at a later date.

TEXAS INSTRUMENTS
INCORPORATED
SEMICONDUCTOR-COMPONENTS DIVISION
POST OFFICE BOX 5012 • DALLAS 22, TEXAS

## TYPICAL CHARACTERISTICS

RELATIVE SPECTRAL INTENSITY

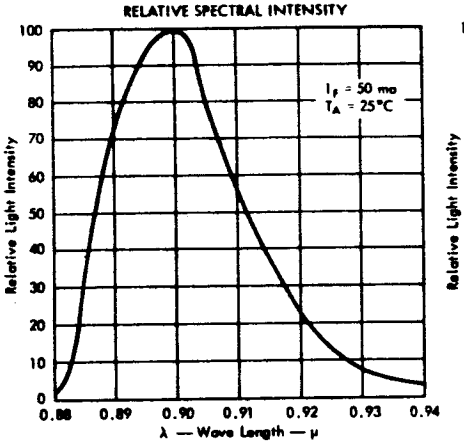


FIGURE 1

RELATIVE LIGHT INTENSITY
vs
ANGULAR DISPLACEMENT

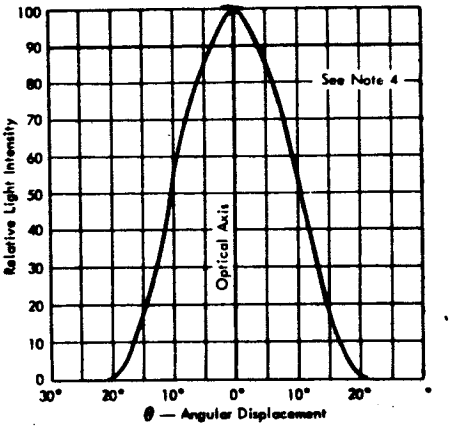


FIGURE 2

FORWARD CONDUCTION CHARACTERISTICS

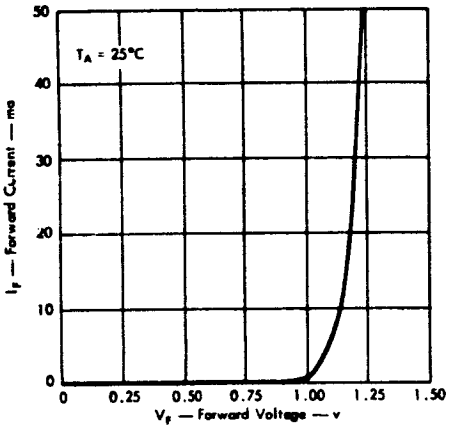


FIGURE 3

NOTE 4: The diagram for relative light intensity shows that most of the radiant output of the TIXL01 is concentrated within a narrow circular cone. Radiant power output into various view angles can be measured by a small-diameter aperture and a calibrated solar cell. The solar cell, covered by the aperture, is held at a distance S from the light source where S is related to the view angle $\theta$ and the aperture radius r by the following equation:

$$S = \frac{r}{\tan\left(\frac{\theta}{2}\right)}$$

PRINTED IN U.S.A.

TEXAS INSTRUMENTS
INCORPORATED
SEMICONDUCTOR-COMPONENTS DIVISION
POST OFFICE BOX 5012 • DALLAS 22, TEXAS

TEXAS INSTRUMENTS RESERVES THE RIGHT TO MAKE CHANGES AT ANY TIME IN ORDER TO IMPROVE DESIGN AND TO SUPPLY THE BEST PRODUCT POSSIBLE.



THE BOEING COMPANY

# TYPE TIXL02
# P-N DIFFUSED GALLIUM ARSENIDE DIODE LIGHT SOURCE

TYPE TIXL02
BULLETIN NO. DL-S 657459, MARCH 1968

**DESIGNED TO EMIT NEAR-INFRARED LIGHT WHEN FORWARD BIASED**
**(Improved Version of SNX100)**

- **Light Source Spectrally Matched to Silicon Sensors**
- **Recommended for Application in Character Recognition, Tape and Card Readers, and Encoders**
- **Narrow Light Beam**

## mechanical data

The devices are in a hermetically sealed welded case similar to JEDEC TO-18 with window. All TO-18 registration notes also apply to this outline. Approximate weight is 0.35 grams.

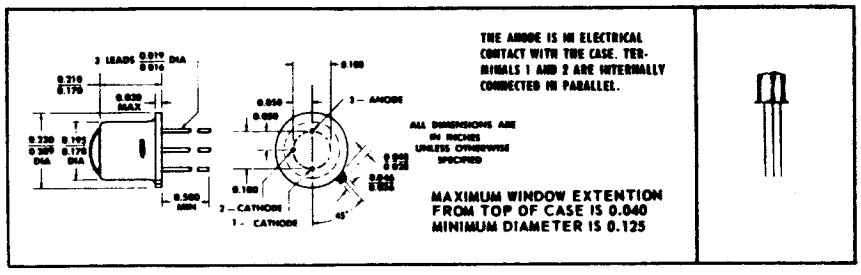


## absolute maximum ratings

| | |
|---|---|
| Reverse Voltage at 25°C Case Temperature | 2 v |
| Continuous Power Dissipation at (or below) 25°C Case Temperature (See Note 1) | 1.5 w |
| Operating Case Temperature Range | −195°C to +125°C |
| Storage Temperature Range | −195°C to +125°C |
| Lead Temperature 1/16" from Case for 10 Seconds | 230°C |

## electrical characteristics at 25°C case temperature

| | PARAMETER | TEST CONDITIONS | MIN | TYP | MAX | UNIT |
|---|---|---|---|---|---|---|
| $\lambda$ | Wavelength at Peak Emission | $I_F = 100$ ma | | 0.9 | | μ |
| $P_o$ | Radiant Power Output into 90° Circular Cone | $I_F = 100$ ma, See Note 2 | 90† | | | μW |
| $V_F$ | Static Forward Voltage | $I_F = 100$ ma | | 1.2 | 1.3 | v |
| $C_T$ | Total Capacitance | $V = 0$, $f = 1$ Mc, See Note 3 | | 1000 | | pf |

NOTES: 1. Derate linearly to 125°C case temperature at the rate of 15 mw/C°.
2. The radiant power output into a 90° right circular cone coaxial with the device axis of symmetry is measured by use of a calibrated silicon solar cell held in close proximity to the glass lens of the device.
3. Total capacitance is junction capacitance plus header capacitance. Header capacitance is typically 1.5 pf measured at 1 Mc

†This power is equivalent to approximately $4 \times 10^{14}$ photons per second at 0.9 microns.

TYPICAL TEST CIRCUIT FOR [redacted] TIXL02

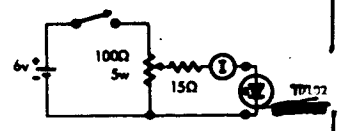


Use heat sink for currents greater than 100 ma.
Max junction temperature 125°C.

PRELIMINARY DATA SHEET:
Supplementary data will be published at a later date.

TEXAS INSTRUMENTS
INCORPORATED
SEMICONDUCTOR-COMPONENTS DIVISION
POST OFFICE BOX 5012 • DALLAS 22, TEXAS



THE BOEING COMPANY

# TYPE TIXL02
# P-N DIFFUSED GALLIUM ARSENIDE DIODE LIGHT SOURCE

## TYPICAL CHARACTERISTICS

RELATIVE SPECTRAL INTENSITY

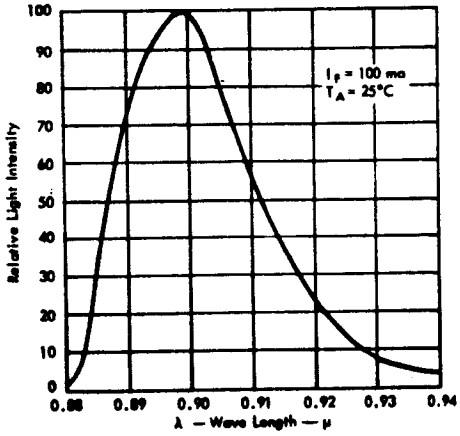


FIGURE 1

RELATIVE LIGHT INTENSITY
vs
ANGULAR DISPLACEMENT

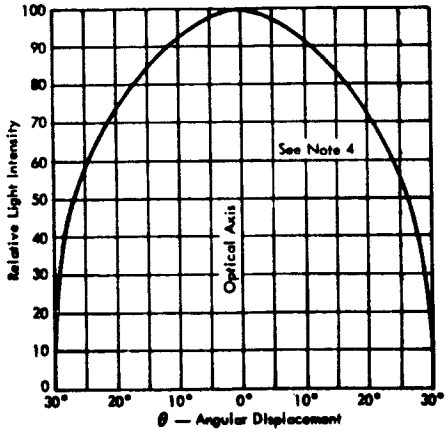


FIGURE 2

FORWARD CONDUCTION CHARACTERISTICS

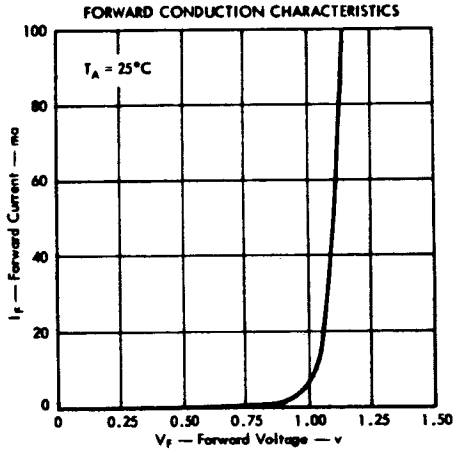


FIGURE 3

NOTE 4: Radiant power output into various view angles can be measured by a small-diameter aperture and a calibrated solar cell. The solar cell, covered by the aperture, is held at a distance S from the light source where S is related to the view angle θ and the aperture radius r by the following equation:

$$S = \frac{r}{\tan\left(\frac{\theta}{2}\right)}$$

PRINTED IN U.S.A.

TEXAS INSTRUMENTS
INCORPORATED
SEMICONDUCTOR-COMPONENTS DIVISION
POST OFFICE BOX 5012 • DALLAS 22, TEXAS

TEXAS INSTRUMENTS RESERVES THE RIGHT TO MAKE CHANGES AT ANY TIME IN ORDER TO IMPROVE DESIGN AND TO SUPPLY THE BEST PRODUCT POSSIBLE.

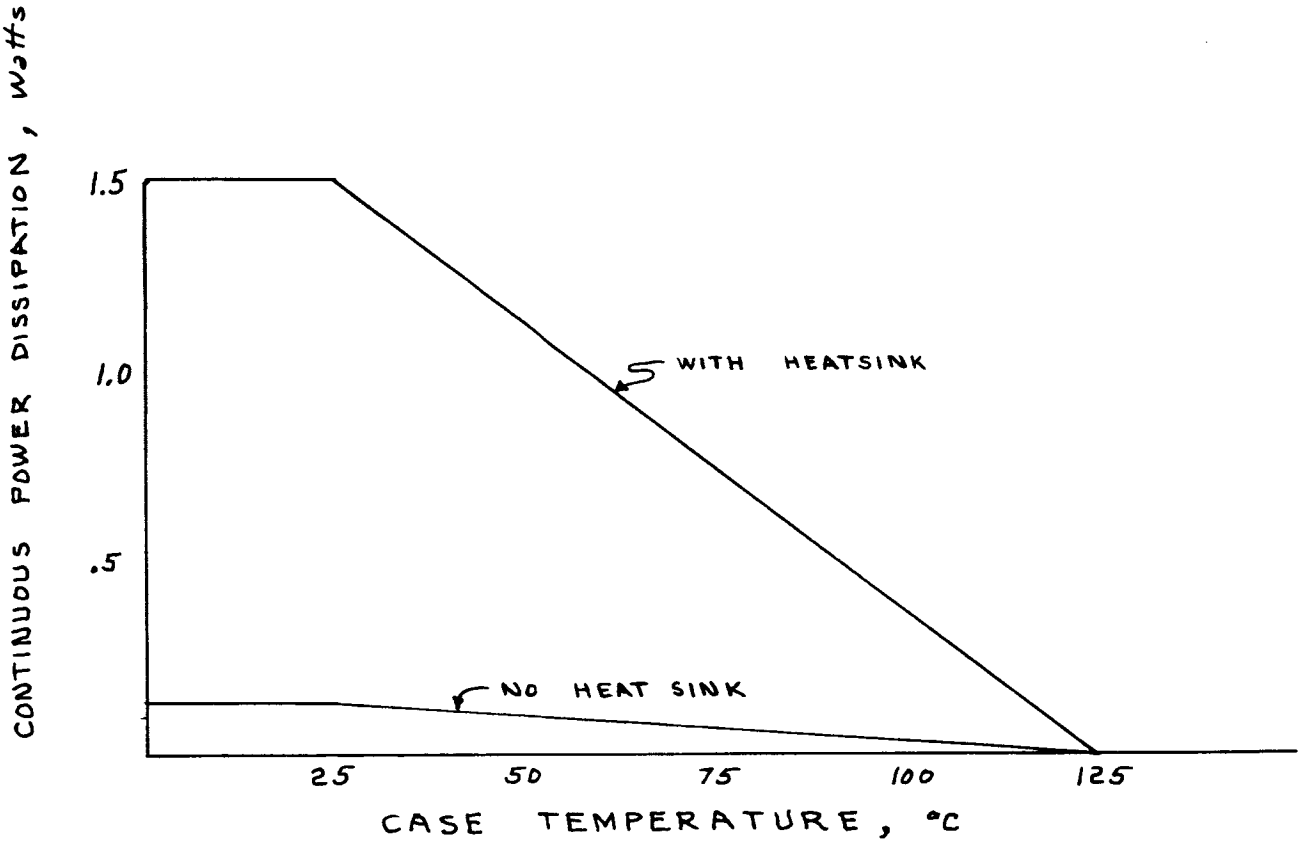


FOR MAX. POWER DISSIPATION USING THERMALLOY HEAT SINK #2218A WITH THERMAL RESISTANCE $\theta_{CA} = 25°C/watt$:

$$P_d = \frac{T_J - T_A}{\theta_{CA} + \theta_{JC}}$$

where $\theta_{JC} = \frac{1}{15 \frac{mw}{°C}} = 67.7 \frac{°C}{w}$

$T_A \leq 25°C$

$$P_d = \frac{125°C - 25°C}{25 \frac{°C}{w} + 67.7 \frac{°C}{w}}$$

$= 1.08$ watt

$P_d$ @ $T_A = 30°C = 1.025$ w

$P_d$ @ $T_A = 40°C = 0.915$ w

$P_d$ @ $T_A = 50°C = 0.81$ w

| CALC | RST | 11Jan66 | REVISED | DATE | TIXL02 LIGHT SOURCE ADDITIONAL DATA | |
|---|---|---|---|---|---|---|
| CHECK | | | | | | |
| APR | | | | | | |
| APR | | | | | A-8 BOEING AIRPLANE COMPANY | PAGE |
| | | | | | | |

# TYPE 1N2175
## N-P-N DIFFUSED SILICON PHOTO-DUO-DIODE

TYPE 1N2175
BULLETIN NO. DL-S 623313, DECEMBER 1963
REPLACES BULLETIN NO. DL-S 1044, FEBRUARY 1959

**FOR APPLICATION IN:**

- Tape readout
- Card readout
- Light switching
- Measurement indicators

**50 VOLTS**
**250 MILLIWATTS**
**Designed for 125°C operation**
**Unlimited altitude range**

### mechanical data

Hermetically sealed case. Unit weight 0.16 grams.

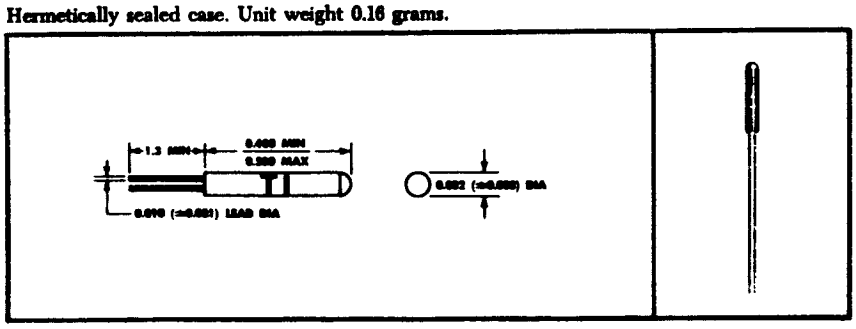


### ratings

| conditions | min | typical | max | unit |
|---|---|---|---|---|
| Bias Voltage @25°C | | | ±50 | vdc |
| Power Dissipation @25°C | | | 250 | mw |
| Operating Temperature | −65 | | +125 | °C |
| Storage Temperature | −65 | | +125 | °C |

### specifications

| | | | | |
|---|---|---|---|---|
| ‡Dark Current @25°C @±50 vdc | | 0.01 | 0.5 | μadc |
| Dark Current @100°C @±50 vdc | | 20 | 100 | μadc |
| †Light Current @25°C @±10 vdc | 100 | 200 | | μadc |
| * Typical Photocurrent Rise Time | | 2 | | μsec |
| Typical Photocurrent Fall Time | | 45 | | μsec |
| Typical Sensitivity | | 22.3 | | μa/mw/cm². |

NOTES:

‡ Dark current is leakage current across diode with no incident irradiation.

† Light current is measured for a value of irradiance. Irradiance = 9 mw/cm² in a wave length range of .7 to 1.1 microns as defined by a Corning CS 7-69 filter.

* Rise time is the time required for the photocurrent ** to rise from 10% to 90% of its final value after instantaneous application of excitation. Fall time is the time for the photocurrent to decay from 90% to 10% of its initial value after instantaneous removal of excitation.

**Photocurrent is the difference between Light Current and Dark Current.

APPLICATION NOTES:

The 1N2175 is a subminiature symmetrically diffused silicon unit. The two junctions are symmetrical so either diode terminal can be biased positively or negatively. Because of this unique design, AC or DC bias voltage can be used. The small size and high light sensitivity of this unit makes it particularly useful in high speed reading of punched cards and tapes, light detection systems, and in production line screening or counting. Numerous other commercial and military applications exist.

TEXAS INSTRUMENTS
INCORPORATED
SEMICONDUCTOR-COMPONENTS DIVISION
POST OFFICE BOX 5012 • DALLAS 22, TEXAS

# TYPE 1N2175
# N-P-N DIFFUSED SILICON PHOTO-DUO-DIODE

## TYPICAL CHARACTERISTICS

SPECTRAL RESPONSE CURVE*

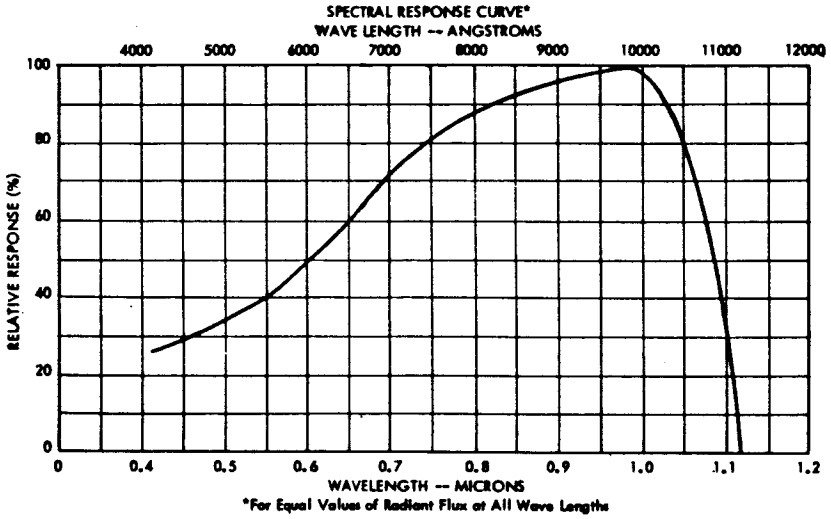


*For Equal Values of Radiant Flux at All Wave Lengths

PHOTOCURRENT vs BIAS VOLTAGE FOR DIFFERENT IRRADIANCE INTENSITIES

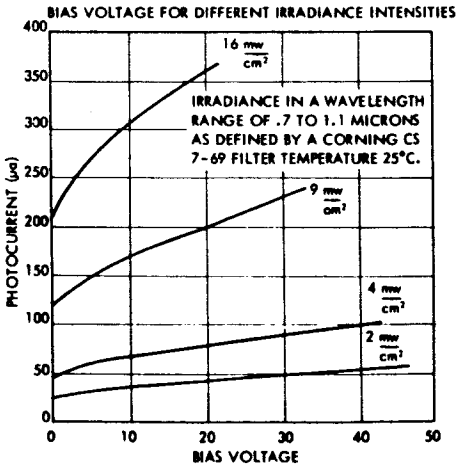


PHOTOCURRENT vs IRRADIANCE

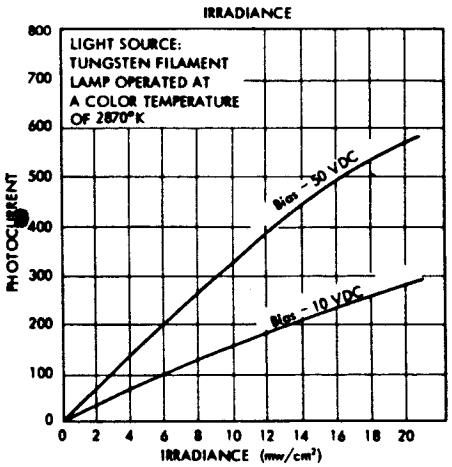


TEXAS INSTRUMENTS
INCORPORATED
SEMICONDUCTOR-COMPONENTS DIVISION
POST OFFICE BOX 5012 • DALLAS 22, TEXAS

# TYPE 1N2175
# N-P-N DIFFUSED SILICON PHOTO-DUO-DIODE

## TYPICAL CHARACTERISTICS

TYPICAL DARK CURRENT CHARACTERISTIC
vs. TEMPERATURE
FOR ANY CONSTANT VOLTAGE
BETWEEN 10 AND 50 V

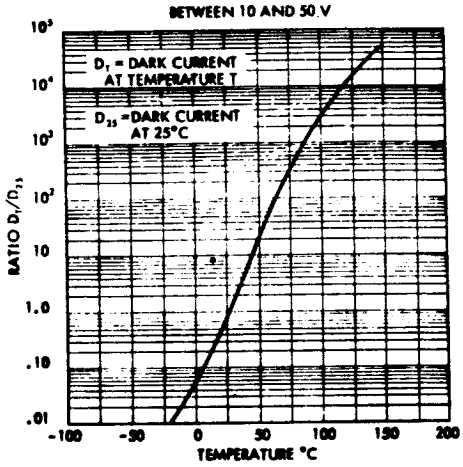


DERATING CURVE

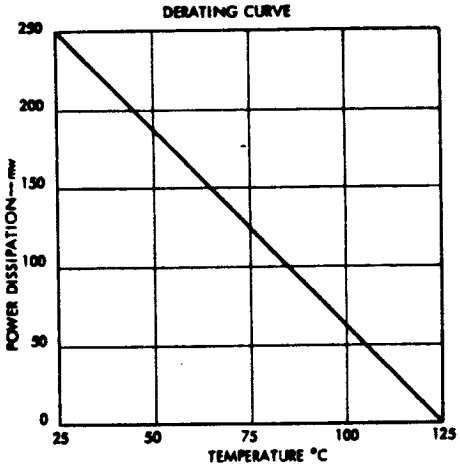


FREQUENCY RESPONSE AT BIAS VOLTAGE OF 10 V AND 25°C

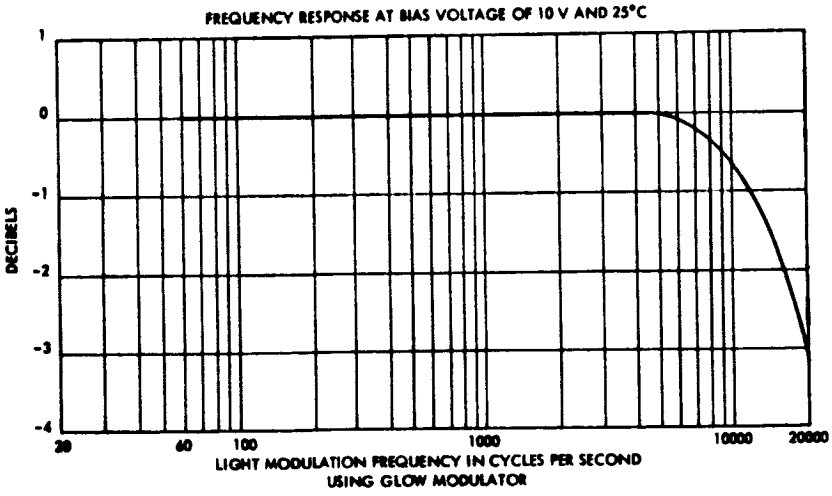


TEXAS INSTRUMENTS
INCORPORATED
SEMICONDUCTOR-COMPONENTS DIVISION
POST OFFICE BOX 5012 • DALLAS 22, TEXAS

# TYPE 1N2175
# N-P-N DIFFUSED SILICON PHOTO-DUO-DIODE

PHOTO DUO-DIODE PREAMPLIFIER

This circuit was designed for use with the TI 1N2175 photo duo-diode. A voltage amplification of 30 db was obtained. This varied less than 1 db changing from low $h_{FE}$ units at -40°C to high $h_{FE}$ units at 100°C. An output of 4 volts peak to peak can be obtained across a 1 k load resistor. The amplifier response is ±1 db from 10 cps to 10 kc.

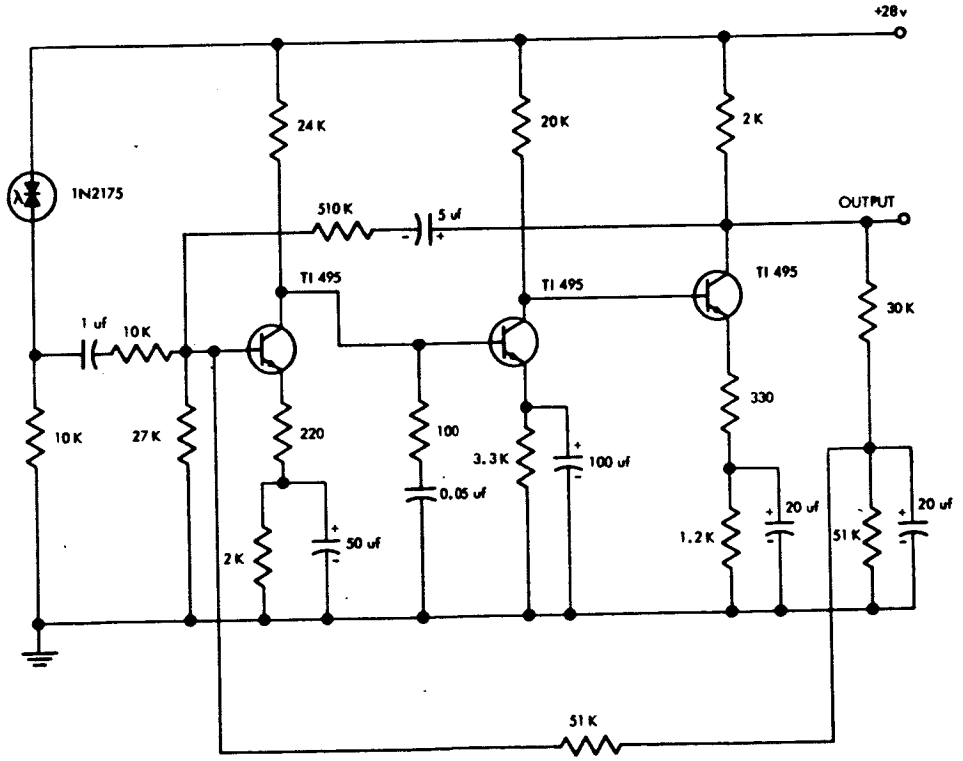


TEXAS INSTRUMENTS
INCORPORATED
SEMICONDUCTOR-COMPONENTS DIVISION
POST OFFICE BOX 5012 • DALLAS 22, TEXAS

PRINTED IN U.S.A.
TI cannot assume any responsibility for any circuits shown or represent that they are free from patent infringement.

TEXAS INSTRUMENTS RESERVES THE RIGHT TO MAKE CHANGES AT ANY TIME IN ORDER TO IMPROVE DESIGN AND TO SUPPLY THE BEST PRODUCT POSSIBLE.

# TYPE LSX 600
# N-P-N PLANAR SILICON LIGHT SENSOR

TYPE LSX 600
BULLETIN NO. DL-S 6332070, JUNE 1963

## MICRO SENSOR DESIGNED FOR HIGH-DENSITY MATRIX AND LINE READ-OUT EQUIPMENT

- Recommended for Application in Character Recognition, Tape and Card Readers, Velocity Indicators, and Encoders
- Unique Package Design Allows for Assembly into Printed Circuit Boards
- Small Diameter Reduces Optical "Cross-Talk"
- Power Dissipation 50 mw

**mechanical data**

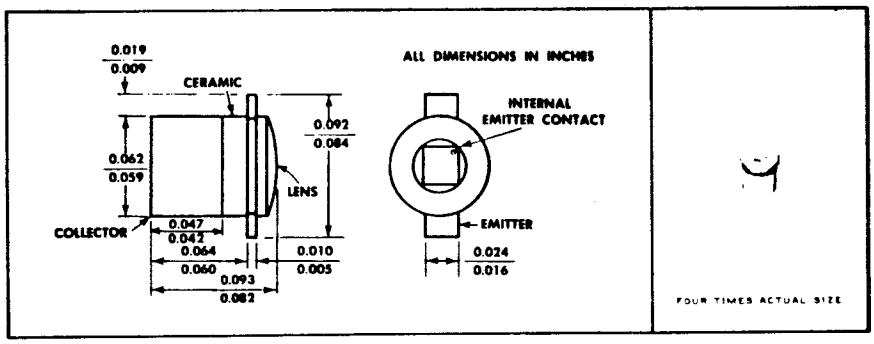


**absolute maximum ratings at 25°C free-air temperature (unless otherwise noted)**

| | |
|---|---|
| Collector-Emitter Voltage | 50 v |
| Emitter-Collector Voltage | 7 v |
| Total Device Dissipation at (or below) 25°C Free-Air Temperature (See Note 1) | 50 mw |
| Operating Temperature | 125°C |
| Storage Temperature Range | −65°C to +150°C |
| Soldering Temperature (3 minutes) | 240°C |

NOTE 1. Derate linearly to 125°C free-air temperature at the rate of 0.5 mw/C°

PRELIMINARY DATA SHEET:
Supplementary data will be published at a later date.

TEXAS INSTRUMENTS
INCORPORATED
SEMICONDUCTOR-COMPONENTS DIVISION
POST OFFICE BOX 5012 • DALLAS 22, TEXAS

# TYPE LSX 600
# N-P-N PLANAR SILICON LIGHT SENSOR

**electrical characteristics at 25°C free-air temperature (unless otherwise noted)**

| PARAMETER | TEST CONDITIONS | MIN | TYP | MAX | UNIT |
|---|---|---|---|---|---|
| $I_L$ Light Current | $V_{CE} = 5$ v, $H = 20$ mw/cm² (See Note 2) | 0.8 | 1.0 | | ma |
| $I_D$ Dark Current | $V_{CE} = 30$ v, $H = 0$ | | 0.01 | 0.025 | μa |
| $I_D$ Dark Current | $V_{CE} = 30$ v, $H = 0$, $T_A = 100°C$ | | 10 | | μa |
| $V_{CE(sat)}$ Collector-Emitter Saturation Voltage | $I_L = 0.4$ ma, $H = 20$ mw/cm² (See Note 2) | | 0.3 | | v |

NOTE 2. Irradiance (H) is the radiant power per unit area incident upon a surface. For this measurement the source is an unfiltered tungsten linear filament bulb operating at a 2870°K color temperature.

**switching characteristics at 25°C free-air temperature**

| PARAMETER | TEST CONDITIONS | TYP | UNIT |
|---|---|---|---|
| $t_r$ Rise Time | $V_{CC} = 35$ v, $I_L = 800$ μa, $R_L = 1$ kΩ, (See Figure 1) | 1.5 | μsec |
| $t_f$ Fall Time | | 15 | μsec |

## PARAMETER MEASUREMENT INFORMATION

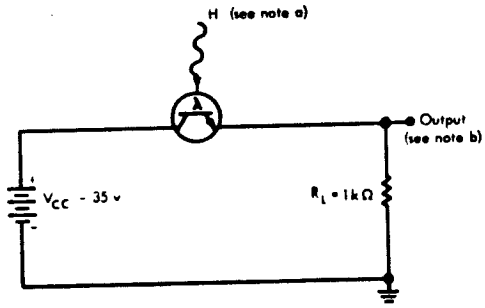


TEST CIRCUIT

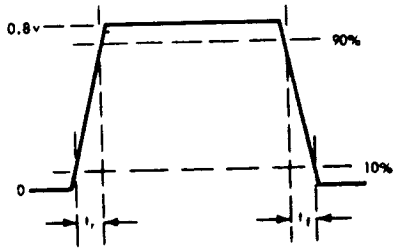


OUTPUT VOLTAGE WAVEFORM

**FIGURE 1 — SWITCHING TIME**

NOTES: a. Input irradiance is supplied by a pulsed zenon bulb source. Incident irridation is adjusted for $I_L$ = 800μa

b. Output waveform is monitored on an oscilloscope with the following characteristics:

$t_r \leq 12$ nsec; $R_{in} \geq 1$ megohm, $C_{in} \leq 20$ pf.

TEXAS INSTRUMENTS
INCORPORATED
SEMICONDUCTOR-COMPONENTS DIVISION
POST OFFICE BOX 5012 • DALLAS 22, TEXAS

PRINTED IN U.S.A.

TI cannot assume any responsibility for any circuits shown or represent that they are free from patent infringement.
TEXAS INSTRUMENTS RESERVES THE RIGHT TO MAKE CHANGES AT ANY TIME IN ORDER TO IMPROVE DESIGN AND TO SUPPLY THE BEST PRODUCT POSSIBLE.

# SEMICONDUCTOR SPECIFICATIONS

10/64 55.13
LED-9, LED-10,
LED-11
Infrared Light
Emitting Diode

The General Electric LED-9, 10, 11 are gallium arsenide light emitting diodes designed to produce non-coherent radiation at both 77°K and 300°K (25°C) temperatures. These devices are intended for use in applications such as card readers and security photo-electronic systems. They are particularly useful in applications demanding a light source capable of withstanding severe shock and vibration. The LED-11 is the same as the LED-10 except that the lens cap is removable. The ratings on the LED-11 are based on the cap removed.

## ABSOLUTE MAXIMUM RATINGS

| | | | |
|---|---|---|---|
| Power Dissipation | $T_A = 25°C$ | 150 | mw* |
| Power Dissipation | $T_C = 25°C$ | 1300 | mw** |
| Power Dissipation | $T_C = 77°K$ | 2500 | mw*** |
| *Derate 1.5 mw/°C above 25°C ambient | | | |
| **Derate 1.3 mw/°C above 25°C case. | | | |
| ***Derate 5.4 mw/°C above 77°K case. | | | |
| Forward Current (Pulsed 1 μsec wide) | | | |
| Rep. Rate = 200 pps | $T_C = 25°C$ | 70 | Adc pk |
| Rep. Rate = 400 pps | $T_C = 77°C$ | 70 | Adc pk |
| (LED=9 is limited to 30 amps pk) | | | |
| Breakdown voltage (Reverse) | | 2.0 | Vdc |
| Junction Temperature | | 77°K to +125 | °C |

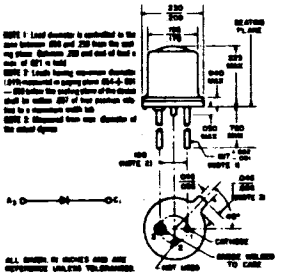

## ELECTRICAL CHARACTERISTICS ($T_C$ = 25°C unless otherwise specified)

| | LED-9 Min. | LED-9 Typ. | LED-10 Min. | LED-10 Typ. | LED-11 Min. | LED-11 Typ. | |
|---|---|---|---|---|---|---|---|
| Total Beam Output (Continuous) | | | | | | | |
| $I_F$ = 100 mAdc | .03 | .05 | .1 | .3 | .2 | .6 | mw |
| $I_F$ = 800 mAdc | | .25 | | 1.5 | | 3 | mw |
| $I_F$ = 100 mAdc, $T_C$ = 77°K | | .5 | | 3 | | 6 | mw |
| $I_F$ = 800 mAdc, $T_C$ = 77°K | | 2.5 | | 15 | | 30 | mw |
| Total Beam Output (Pulsed) (1 μsec wide, 200 pps) | | | | | | | |
| $I_F$ = 10 Apk | | 8 | | 23 | | 45 | mw |
| $I_F$ = 70 Apk | | - | | 125 | | 250 | mw |
| $I_F$ = 10 Apk, $T_C$ = 77°K | | .07 | | 0.4 | | .8 | watts |
| $I_F$ = 70 Apk, $T_C$ = 77°K | | - | | 3.0 | | 6.0 | watts |
| Wave Length | | | | | | | |
| $I_F$ = 100 mAdc | | 9000 | | 9000 | | 9000 | Å |
| $I_F$ = 100 mAdc, $T_C$ = 77°K | | 8450 | | 8450 | | 8450 | Å |
| Spectral Width | | | | | | | |
| $I_F$ = 100 mAdc | | 210 | | 210 | | 210 | Å |
| $I_F$ = 100 mAdc, $T_C$ = 77°K | | 170 | | 170 | | 170 | Å |
| Forward Voltage Drop | | | | | | | |
| $I_F$ = 100 mAdc | | 1.25 | | 1.25 | | 1.25 | Vdc |
| $I_F$ = 100 mAdc, $T_C$ = 77°K | | 1.5 | | 1.5 | | 1.5 | Vdc |
| Breakdown Voltage, $I_R$ = 10 μa | 2.0 | | 2.0 | | 2.0 | | Vdc |
| Capacitance f=1 mcs, 0 volts | | 500 | | 500 | | 500 | pf |
| Radiating Area | ← | .025 X .025 | | | | → | inches |

NOTE: To remove the cap from the LED-11, heat the device to 100°C to 125°C and gently pull the cap free.

SEMICONDUCTOR PRODUCTS DEPARTMENT
ELECTRONICS PARK SYRACUSE, N.Y.
GENERAL ELECTRIC
Outside the U.S.A. and Canada, by Electronic Components Intl. Export Division, 570 Madison Avenue, New York, N.Y. 10019

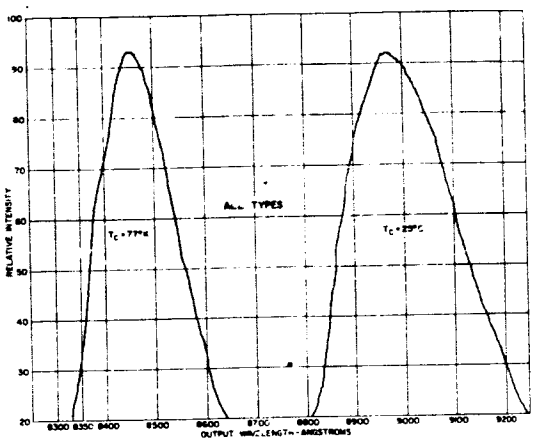
RELATIVE INTENSITY
ALL TYPES
$T_C$ = 77°K
$T_C$ = 25°C
OUTPUT WAVELENGTH - ANGSTROMS

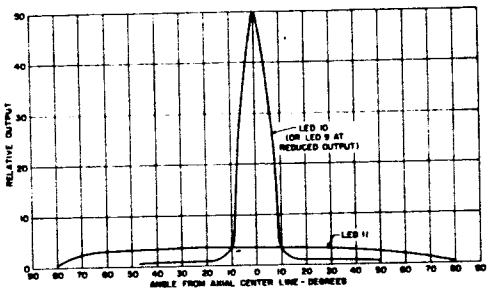
RELATIVE OUTPUT
LED 10
(OR LED 9 AT
REDUCED OUTPUT)
LED 11
ANGLE FROM AXIAL CENTER LINE - DEGREES

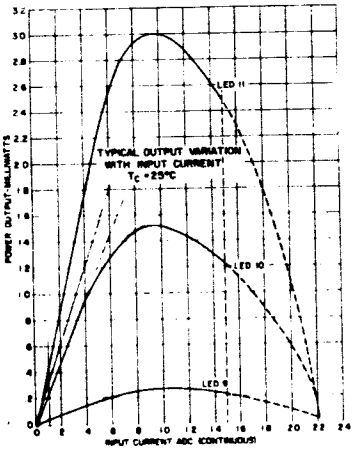
POWER OUTPUT-MILLIWATTS
LED 11
TYPICAL OUTPUT VARIATION
WITH INPUT CURRENT
$T_C$ = 25°C
LED 10
LED 9
INPUT CURRENT ADC (CONTINUOUS)

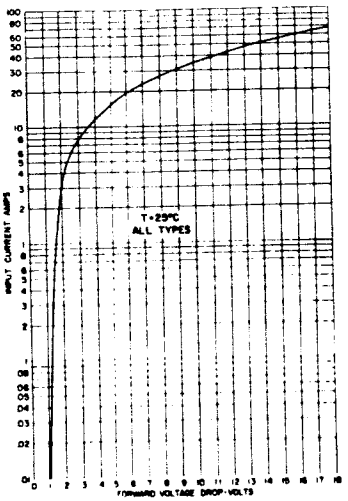
INPUT CURRENT AMPS
T = 25°C
ALL TYPES
FORWARD VOLTAGE DROP-VOLTS

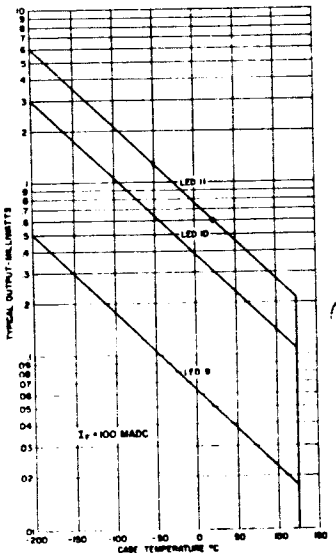
TYPICAL OUTPUT-MILLIWATTS
LED 11
LED 10
LED 9
$I_F$ = 100 MADC
CASE TEMPERATURE °C

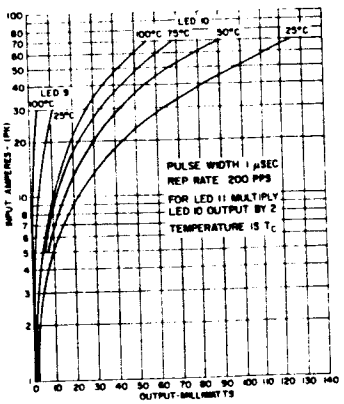
INPUT AMPERES - (PK)
LED 10
100°C
75°C
50°C
25°C
LED 9
100°C
25°C
PULSE WIDTH 1 μSEC
REP RATE 200 PPS
FOR LED 11 MULTIPLY
LED 10 OUTPUT BY 2
TEMPERATURE IS $T_C$
OUTPUT-MILLIWATTS

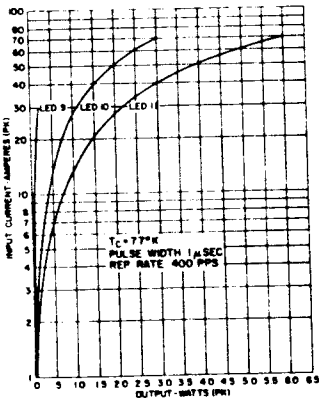
INPUT CURRENT AMPERES (PK)
LED 9
LED 10
LED 11
$T_C$ = 77°K
PULSE WIDTH 1 μSEC
REP RATE 400 PPS
OUTPUT - WATTS (PK)

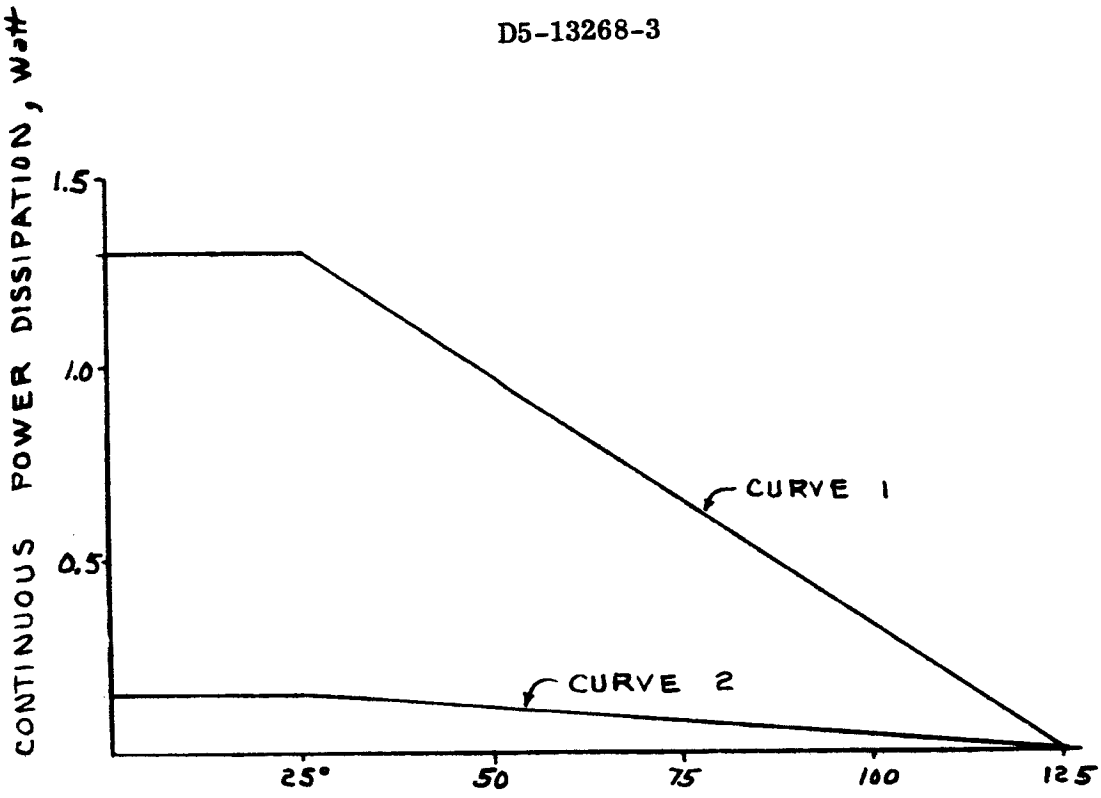


CASE TEMPERATURE, °C CURVE 1
AMBIENT TEMPERATURE, °C CURVE 2

FOR MAX. POWER DISSIPATION USING THERMALLOY HEAT SINK #2218A WITH THERMAL RESISTANCE $\theta_{CA} = 25°C/w$, $\theta_{JC} = 77°C/w$ and $T_A \leq 25°C$:

$$P_d = \frac{T_J - T_A}{\theta_{CA} + \theta_{JC}}$$

$$= \frac{125°C - 25°C}{25°C/w + 77°C/w}$$

$$= 0.98 \text{ watt}$$

$P_d$ @ $T_A = 30°C = 0.93$ w

$P_d$ @ $T_A = 40°C = 0.83$ w

$P_d$ @ $T_A = 50°C = 0.735$ w

| | INITIALS | DATE | REV BY INITIALS | DATE | TITLE | MODEL |
|---|---|---|---|---|---|---|
| CALC | | | | | LED-11 LIGHT SOURCE Additional Data | |
| CHECK | | | | | | |
| APPD. | | | | | | |
| APPD. | | | | | | |

U3 4038 8000 REV. 10-64

REV LTR

BOEING NO.



SH.

# FOTOFET™

SILICON EPITAXIAL JUNCTION

**N-CHANNEL FIELD EFFECT TRANSISTOR**

**FF600**

- ULTRA HIGH SENSITIVITY
- LOW DARK CURRENT
- FAST RESPONSE
- PHOTOTUBE REPLACEMENT

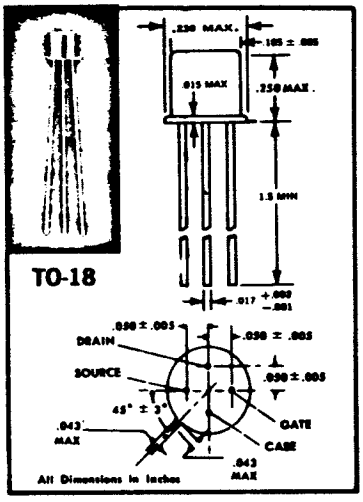


## ELECTRICAL DATA Absolute Maximum Rating

| | | |
|---|---|---|
| Drain to Source Voltage | $BV_{DSO}$ | 15 Volts |
| Drain to Gate Voltage | $BV_{DGO}$ | 15 Volts |
| Gate to Source Voltage | $BV_{GSO}$ | -10 Volts |
| D.C. Gate Current | $I_G$ | 50 mA |
| Junction Temp (operating and storage) | $T_J$ | -65°C to +200°C |
| Power Dissipation (free air) | $P_D$ | 300 mW |
| Lead Temp (@1/16" ± 1/32" from case) | $T_L$ | 240°C for 10 sec. |
| Derating Factor From 200°C | $D_F$ | 0.58°C/mW |

## ELECTRICAL CHARACTERISTICS: $T_A$ = 25°C (Unless Otherwise Stated)

| Parameter | Symbol | Condition | FF600 Min. | FF600 Typ. | FF600 Max. | Units |
|---|---|---|---|---|---|---|
| Gate Leakage Current (Dark) | $I_{GSS}$ | $V_{GS}$ = -10V, $V_{DS}$ = 0 | - | 0.5 | 3.0 | nA |
| Gate Current (Light) [1] | $\lambda I_g$ | $V_{DS}$ = 10V, $V_{GS}$ = 0V | 75 | - | - | nA/FC |
| Zero Gate Voltage Drain Current | $I_{DSS}$ | $V_{DS}$ = 10V, $V_{GS}$ = 0 | 8.0 | 25 | 40 | mA |
| Drain Current (Light) [1] | $\lambda I_d$ | $V_{DS}$ = 10V, $V_{GS}$ = 0V, $R_G$ = 1MΩ | - | 800 | - | μA/FC |
| Transconductance | gm | $V_{DS}$ = 10V, $V_{GS}$ = 0, f = 1KC | 8000 | - | - | μmho |
| Rise Time [2] | $T_R$ | $V_{DS}$ = 10V, $R_L$ = $R_G$ = 100Ω, $V_{GS}$ = 0 | - | 30 | - | nsec |
| Fall Time [3] | $T_F$ | $V_{DS}$ = 10V, $R_L$ = $R_G$ = 100Ω, $V_{GS}$ = 0 | - | 50 | - | nsec |
| Pinch-off Voltage | $V_{PO}$ | $V_{DS}$ = 10V, $I_{DS}$ = 0.1μA | 1.0 | 2.5 | 5.0 | Volts |
| Gate to Source Cap. | $C_{GS}$ | $V_{GS}$ = -10V, f = 140KC | - | - | 35 | pfd |
| Gate to Drain Cap. | $C_{GD}$ | $V_{GD}$ = -10V, f = 140KC | - | - | 20 | pfd |

1 Tungsten Lamp 2800° K Color Temp. 2 GaAs Diode Source 3 Directly Proportional to $R_G$

Crystalonics Inc.
147 SHERMAN STREET • CAMBRIDGE • MASS. 02140 • TELEPHONE: (617) 491-1670 • TWX: 617-499-9156

hpa TENTATIVE DATA 4301

# WIDEBAND PHOTON COUPLED ISOLATOR

The -hpa-4301 Photon Coupled Isolator is a wide bandwidth signal coupling element comprised of a gallium arsenide injection diode infrared source and a PIN photodetector. Electrical input signals are applied to the GaAs diode which emits infrared radiation in proportion to the instantaneous forward current. The radiation is guided via a light pipe into the PIN photodiode. The electrical signals resulting at the photodiode can thereby be controlled from an input which may be in a separate and electrically isolated circuit. The isolation between input and output exceeds $10^{11}$ Ω shunted by less than 0.01 picofarad. The device will operate on dc as well as ac signals, has a 10 mc bandwidth, and can withstand up to 10,000 volts between the input and output. Separate headers and shields on the input and output sections permit a high degree of circuit isolation. Applications include replacing video pulse transformers, rf signal couplers and switches (see -hpa- Application Note 5).

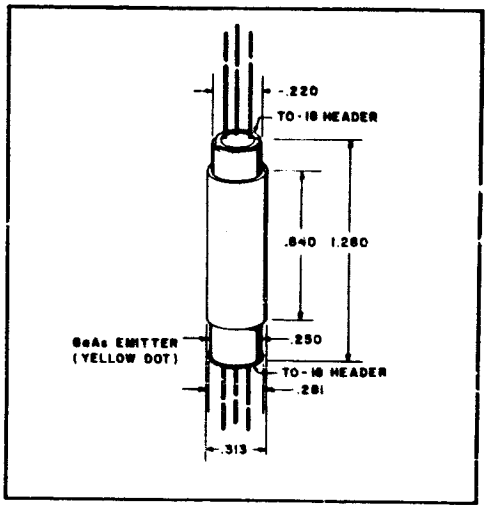


| | $I_1 = 2$ mA, $V_2 = 25$ V Typical | $I_1 = 30$ mA, $V_2 = 25$ V Typical | Unit |
|---|---|---|---|
| Large Signal Current Transfer Ratio, $\eta_1 = I_2/I_1$ | .0002 | .0004 | ratio |
| Small Signal Current Transfer Cutoff Frequency, $f\eta_1$ | 10 | 10 | mcps |

Maximum Input-Output Voltage Difference:* ..... 10,000 V peak
Power Dissipation, T = 25°C,
GaAs Source: ..... 100 mw maximum
Photodiode: ..... 100 mw maximum
Instantaneous Peak Current ($I_1$ peak): ..... 500 mA
Chip to Shield Resistance: ..... $10^9$ Ω
All specifications apply at T = 25°C ± 3°C.

$I_1$ = emitter diode input current.
$I_2$ = photodiode output current.
$V_2$ = voltage across photodiode.
Cathode leads are color coded black.
Shield leads are color coded green.
Anode leads are color coded red.

** Defined as start of corona. Higher voltage units are available on special order.*

*Note: See -hpa-4104 and 4201 for electrical characteristics of the gallium arsenide and silicon diodes.*

*Price: In quantities 1-99, $145.00; 100-999, $97.00 each.*

PRINTED IN U.S.A. 2/65

hpa hp associates 620 Page Mill Road Palo Alto, California (415) 326-8510
An Affiliate of Hewlett-Packard

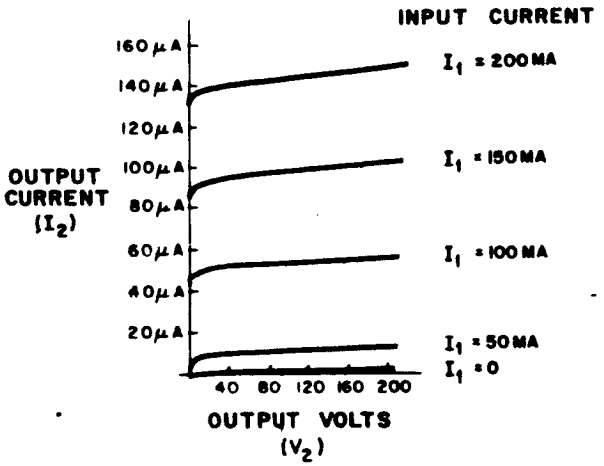


THE VOLT AMPERE OUTPUT CHARACTERISTICS OF THE 4301 ISOLATOR

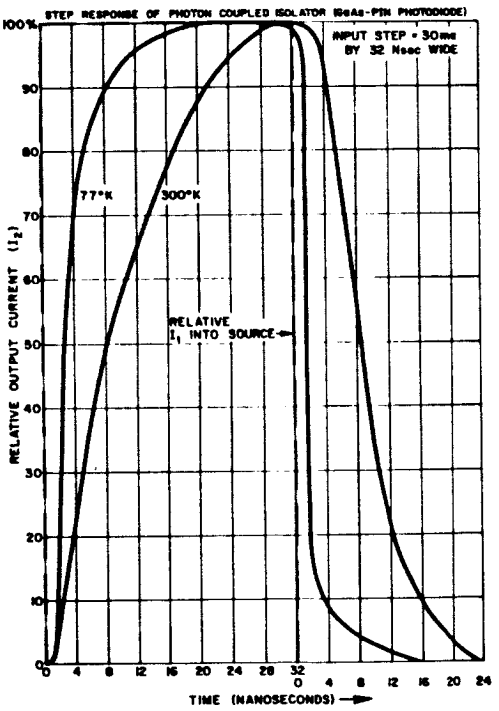


STEP RESPONSE OF PHOTON COUPLED ISOLATOR (GaAs—PIN PHOTODIODE)

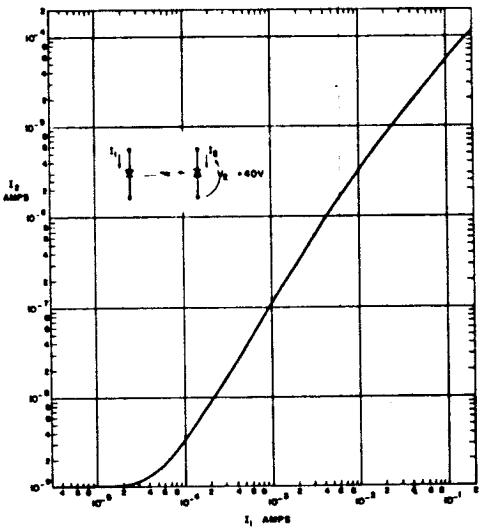


CURRENT TRANSFER CHARACTERISTICS OF PHOTON COUPLED ISOLATOR

hpa 4301

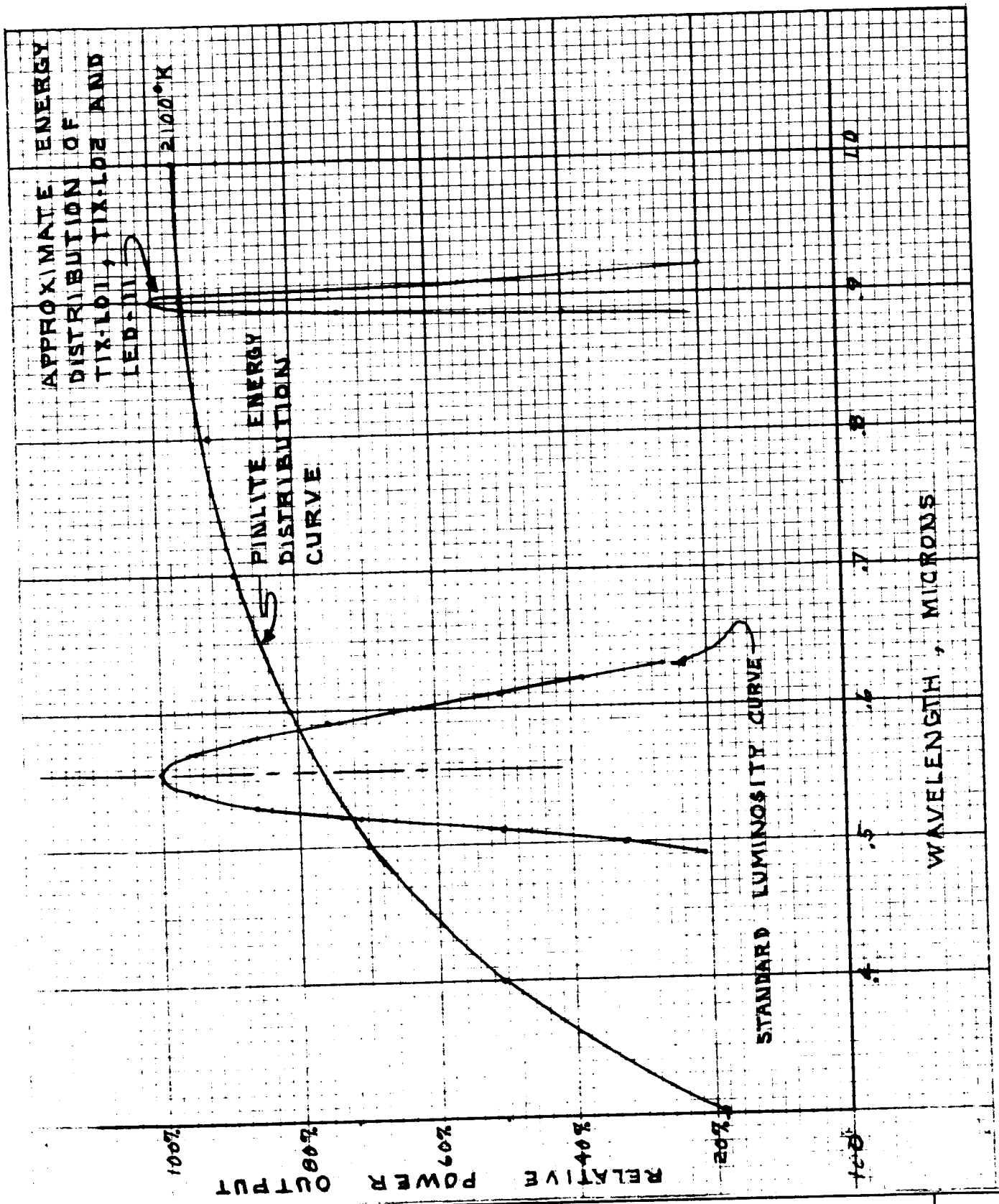


| | INITIALS | DATE | REV BY INITIALS | DATE | TITLE | MODEL |
|---|---|---|---|---|---|---|
| CALC | | | | | RELATIVE SPECTRAL ENERGY DISTRIBUTION OF THE TESTED LIGHT SOURCES | |
| CHECK | | | | | | |
| APPD. | | | | | | |
| APPD. | | | | | | |

U3 4038 8000 REV. 10-64

REV LTR

BOEING NO. D5-13268-3

SH.

## CAUTION NOTES

| | |
|---|---|
| IN-2175: | Max. Voltage $\pm$ 50 VDC<br>Max. Power 250 mV |
| LSX-600: | Collector-Emitter Voltage 50 VDC<br>Emitter-Collector Voltage 7 VDC<br>Max. Power 50 mV |
| T1X-L01: | Reverse Voltage 2 VDC<br>Forward Current 50mA @25$^{o}$C<br>Derate .5mA/$^{o}$C |
| T1X-L02: | Reverse Voltage 2V<br>Max. Continuous Power 1.5W @25$^{o}$C<br>Derate 15 mw/$^{o}$C |
| LED-11: | Reverse Voltage 2.0 VDC Maximum<br>Max. Power Dissipation 150 mW @$T_A$ = 25$^{o}$C<br>1300 mW @$T_c$ = 25$^{o}$C |
| L12-3 & L12-12: | Max. Voltage 1.25 VDC or VAC Peak |
| FF-600: | Gate to Source Breakdown Voltage 10 VDC |

GENERAL INSTRUCTIONS FOR ALL DATA SETS (EXPERIMENTS) IN SECTION 1

1. Connect equipment as shown in the test set-up. Cover the light source and sensor with the light tight enclosure.

2. Record the data indicated on the data sheet for several values of light source (Emitter) forward current.

# DATA SHEET

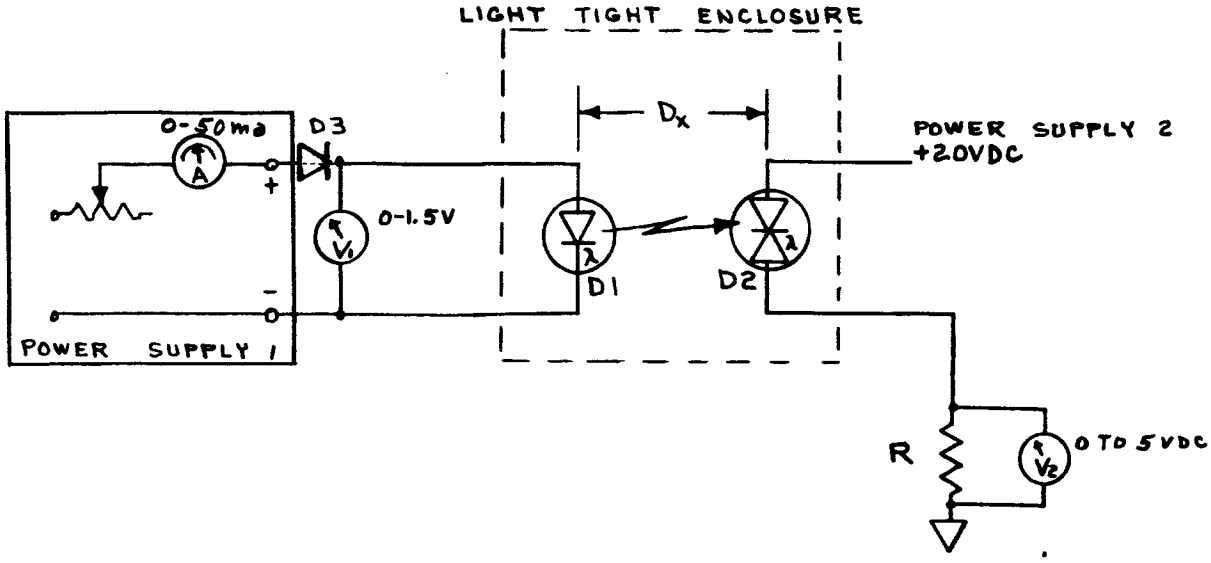


## TEST SET UP

TEST EQUIPMENT LIST

POWER SUPPLY 1 - Lambda LE102 (CURRENT REGULATED)

VOLTMETER $V_1$ - Hathaway R21

VOLTMETER $V_2$ - Fluke 803B

POWER SUPPLY 2 - TRYGON M36-15A S/N 7774

AMMETER - POLYRANGER 88 CAL/CERT 156760

PARTS LIST

D1 - TIX-L01

D2 - IN2175

R - 5 KΩ, GR Decade Box

D3 - IN538

SAFETY PRECAUTIONS : Maximum current in D1 = 50 ma.

| | INITIALS | DATE | REV BY INITIALS | DATE | TITLE | MODEL |
|---|---|---|---|---|---|---|
| TECH | | | | | Device Transfer Characteristics - TIX-L01 Source and IN-2175 Sensor | |
| CHECK | | | | | | |
| APPD. | | | | | | |
| APPD | | | | | | |

03 4038 8000 REV 10 64

# DATA SHEET

AMBIENT TEMP. _____

| READING No. | EMITTER VOLTAGE VDC | EMITTER CURRENT MA | SENSOR VOLTAGE, VDC $D_1$ NOSE TO NOSE | $D_2$ 1/8" | $D_3$ = 1/4" | $D_4$ = 1/2" | |
|---|---|---|---|---|---|---|---|
| 1 | 1.03 | 2.5 ma | 3.8 mv | | | | |
| 2 | 1.08 | 5.0 | 15.6 mv | 6.8 mv | | | |
| 3 | 1.1 | 7.5 | 31.2 mv | | | | |
| 4 | 1.12 | 10.0 | 53.7 mv | 25.1 mv | 13.4 mv | 4.5 mv | |
| 5 | 1.13 | 12.5 | 75.3 mv | | | | |
| 6 | 1.14 | 15.0 | 102 mv | 48.8 mv | | | |
| 7 | 1.14 | 17.5 | 127.8 mv | | | | |
| 8 | 1.15 | 20.0 | 154.1 mv | 83.6 mv | 45.3 | 15.5 mv | |
| 9 | 1.17 | 22.5 | 190. mv | | | | |
| 10 | 1.17 | 25.0 | 221. mv | 112.1 mv | | | |
| 11 | 1.18 | 27.5 | 251 mv | | | | |
| 12 | 1.18 | 30.0 | 281 mv | 147. mv | 83. mv | 31.0 mv | |
| 13 | 1.18 | 32.5 | 303 mv | | | | |
| 14 | 1.18 | 35.0 | 342 mv | 186.7 mv | | | |
| 15 | 1.19 | 37.5 | 371 mv | | | | |
| 16 | 1.19 | 40.0 | 408 mv | 223.5 mv | 129.4 mv | 48.6 mv | |
| 17 | 1.19 | 42.5 | 437 mv | | | | |
| 18 | 1.2 | 44.5 | 450.4 mv | 259.5 mv | 151 mv | 58.2 mv | |
| 19 | 1.2 | 47.5 | 496.4 mv | 260.* | | | |
| 20 | | 50 ma ▷ | | | | | |

* in ambient light

▷ Do not perform this step if ambient temperature exceeds 25°C. Do not remain on this step very long.

| | INITIALS | DATE | REV BY INITIALS | DATE | TITLE | MODEL |
|---|---|---|---|---|---|---|
| TECH | | | | | | |
| CHECK | | | | | | |
| APPD | R J I | 7Feb66 | | | | |
| APPD | | | | | | |

| READING No. (From Sheet 2) | Sensor Current μa $I_s = \frac{V_R}{5K\Omega}$ | | | |
|---|---|---|---|---|
| | D1 | D2 | D3 | D4 |
| 1 | .76 | | | |
| 2 | 3.12 | 1.36 | | |
| 3 | 6.25 | | | |
| 4 | 10.7 | 5.02 | 2.68 | .9 |
| 5 | 15.05 | | | |
| 6 | 20.4 | 9.75 | | |
| 7 | 25.6 | | | |
| 8 | 30.8 | 16.7 | 9.07 | 3.1 |
| 9 | 38.0 | | | |
| 10 | 44.2 | 22.4 | | |
| 11 | 50.2 | | | |
| 12 | 56.2 | 28.4 | 16.6 | 6.2 |
| 13 | 60.6 | | | |
| 14 | 68.5 | 37.4 | | |
| 15 | 74.3 | | | |
| 16 | 81.6 | 44.75 | 25.9 | 9.73 |
| 17 | 87.5 | | | |
| 18 | 90.0 | 52.0 | 30.2 | 11.65 |
| 19 | 99.3 | | | |
| 20 | | | | |

| | INITIALS | DATE | REV BY INITIALS | DATE | TITLE | MODEL |
|---|---|---|---|---|---|---|
| CALC | RST | 8 Feb66 | | | | |
| CHECK | | | | | | |
| APPD. | | | | | | |
| APPD. | | | | | | |

U3 4038 8000 REV. 10-64

REV LTR

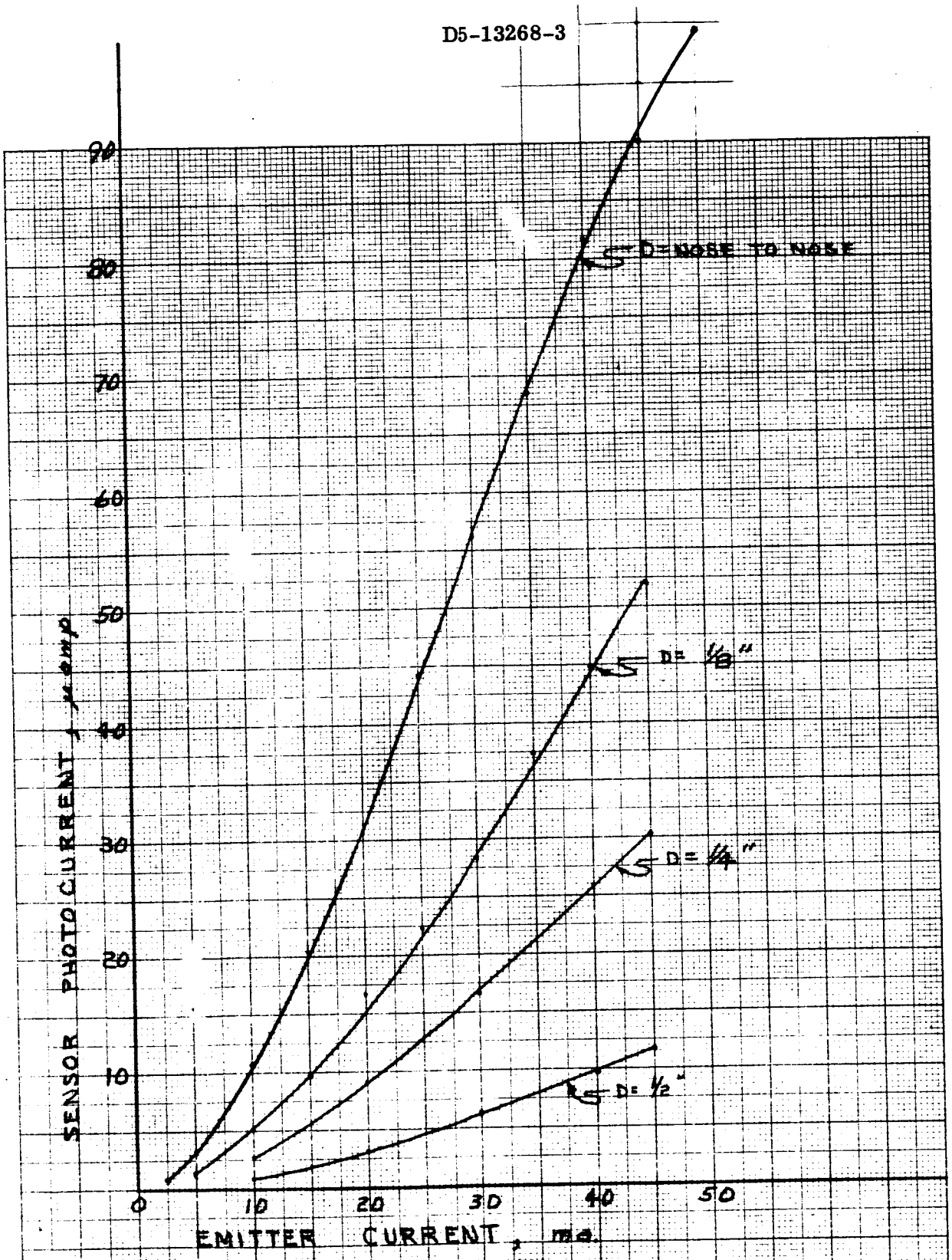


PHOTOCURRENT IN IN2175 SENSOR WITH 5KΩ SERIES RESISTOR Vs TIXL01 ENERGY EMITTER FORWARD CURRENT AT VARIOUS SEPARATION DISTANCES, D.

| | | | |
|---|---|---|---|
| CALC | RdL 8Feb66 | REVISED | DATE |
| CHECK | | | |
| APPR | | | |
| APPR | | | |

DATA SET 1 SECTION 1



THE BOEING COMPANY
SEATTLE 24, WASHINGTON

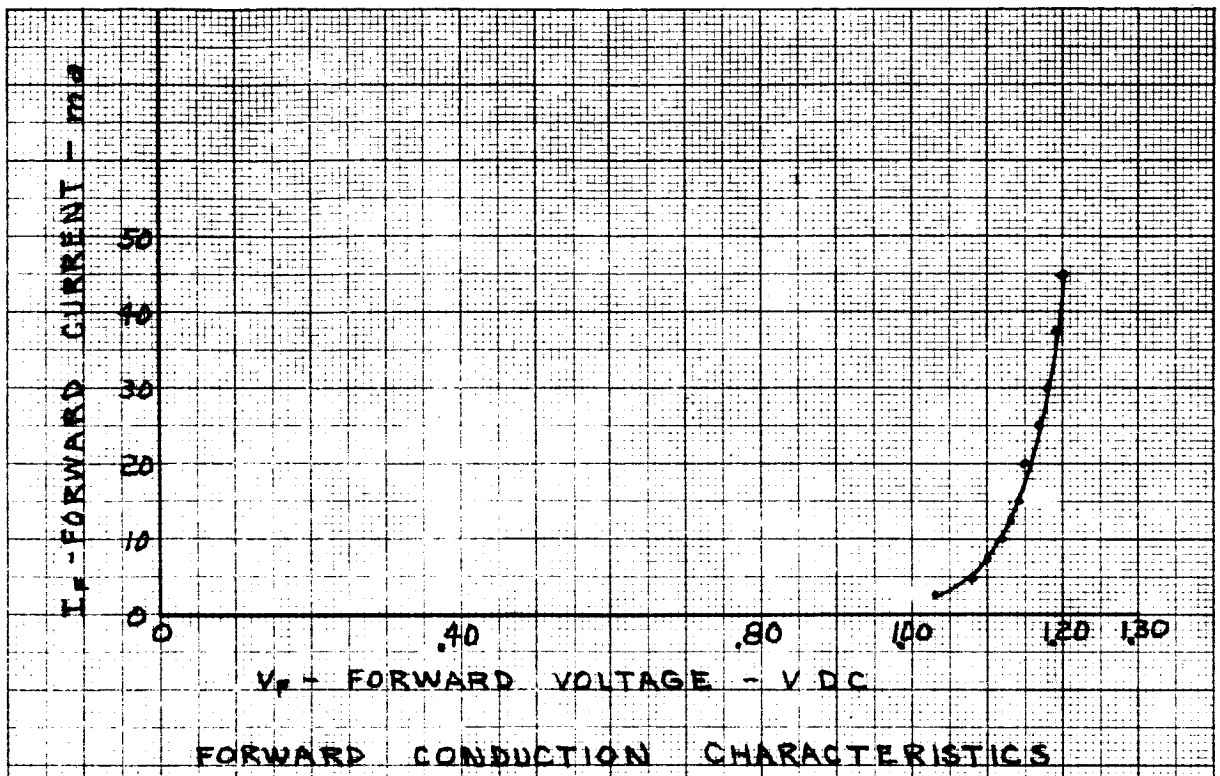


FORWARD CONDUCTION CHARACTERISTICS

| | | | |
|---|---|---|---|
| CHKD | RJZ 9 Feb 66 | REVISED DATE | |
| CHK CK | | | |
| APPD | | DATA SET 1 SECTION 1 | |
| APPR | | THE BOEING COMPANY SEATTLE 24, WASHINGTON | PAGE SH 5 |

$$\text{RESISTANCE OF IN2175} = \frac{V_{SUPPLY} - V_{RESISTOR\ IN\ SERIES}}{I_{photocurrent}}$$

$$R_{@\ I_E = 10\ ma} = \frac{20.0 - .054}{10.7 \times 10^{-6}} = 1.86 \text{ meg}$$

$$R_{@\ I_E = 20\ ma} = \frac{20.0 - .154}{30.8 \times 10^{-6}} = 645\ K\Omega$$

$$R_{@\ I_E = 30\ ma} = \frac{20.0 - .281}{56.2 \times 10^{-6}} = 351\ K\Omega$$

$$R_{@\ I_E = 40\ ma} = \frac{20.0 - .408}{81.6 \times 10^{-6}} = 240\ K\Omega$$

$$R_{@\ I_E = 47.5\ ma} = \frac{20.0 - .496}{99.3 \times 10^{-6}} = 196\ K\Omega$$

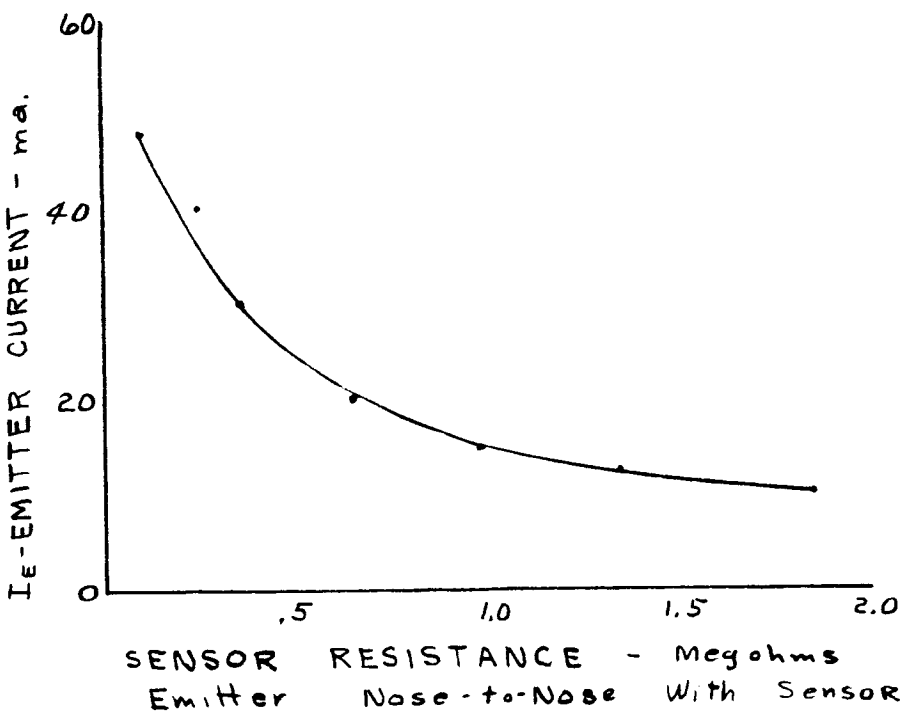


| | INITIALS | DATE | REV BY INITIALS | DATE | TITLE | MODEL |
|---|---|---|---|---|---|---|
| CALC | RST | 9 Feb 6 | | | | |
| CHECK | | | | | | |
| APPD. | | | | | | |
| APPD. | | | | | | |

U3 4038 8000 REV. 10-64

# DATA SHEET

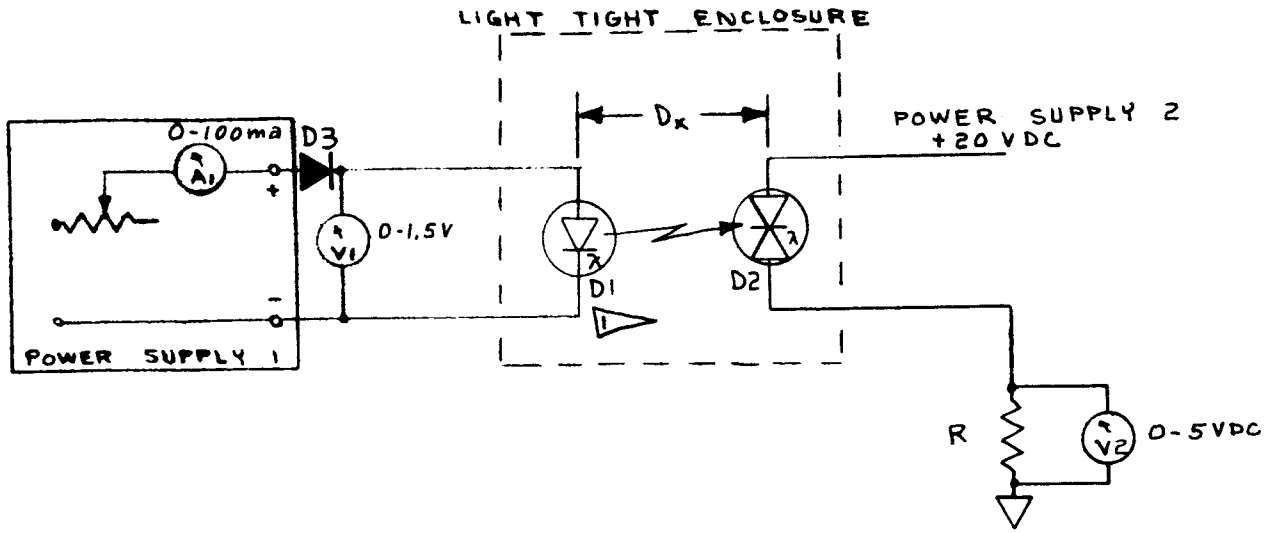


## TEST SETUP

TEST EQUIPMENT LIST

| | | |
|---|---|---|
| CURRENT REGULATED POWER SUPPLY 1 | | -Lambda LE102 |
| POWER SUPPLY 2 | | -TRYGON M36-15A S/N 7774 |
| VOLTMETER | 1 | -Hathaway R21 S/N 531312 |
| VOLTMETER | 2 | -Fluke 803B S/N 1460 |
| AMMETER | 1 | -Polyranger 88 S/N 156760 |

PARTS LIST

D1 = TIXL02 1

D2 = IN2175

R = 5 KΩ, Decade Box-GR

D3 = IN538

1 Do not operate without Thermalloy #2218A Heat Sink.

SAFETY PRECAUTIONS: Maximum D1 power dissipation (Emitter V·I) must not exceed 1 watt at 25°C. Derate 15 mw/°C.

| | INITIALS | DATE | REV BY INITIALS | DATE | TITLE | MODEL |
|---|---|---|---|---|---|---|
| TECH | | | | | Device Transfer Characteristics - TIX-L02 Source and IN-2175 Sensor | |
| CHECK | | | | | | |
| APPD. | | | | | | |
| APPD | | | | | | |

03 40 1A 9000 REV 10 64

REV LTR

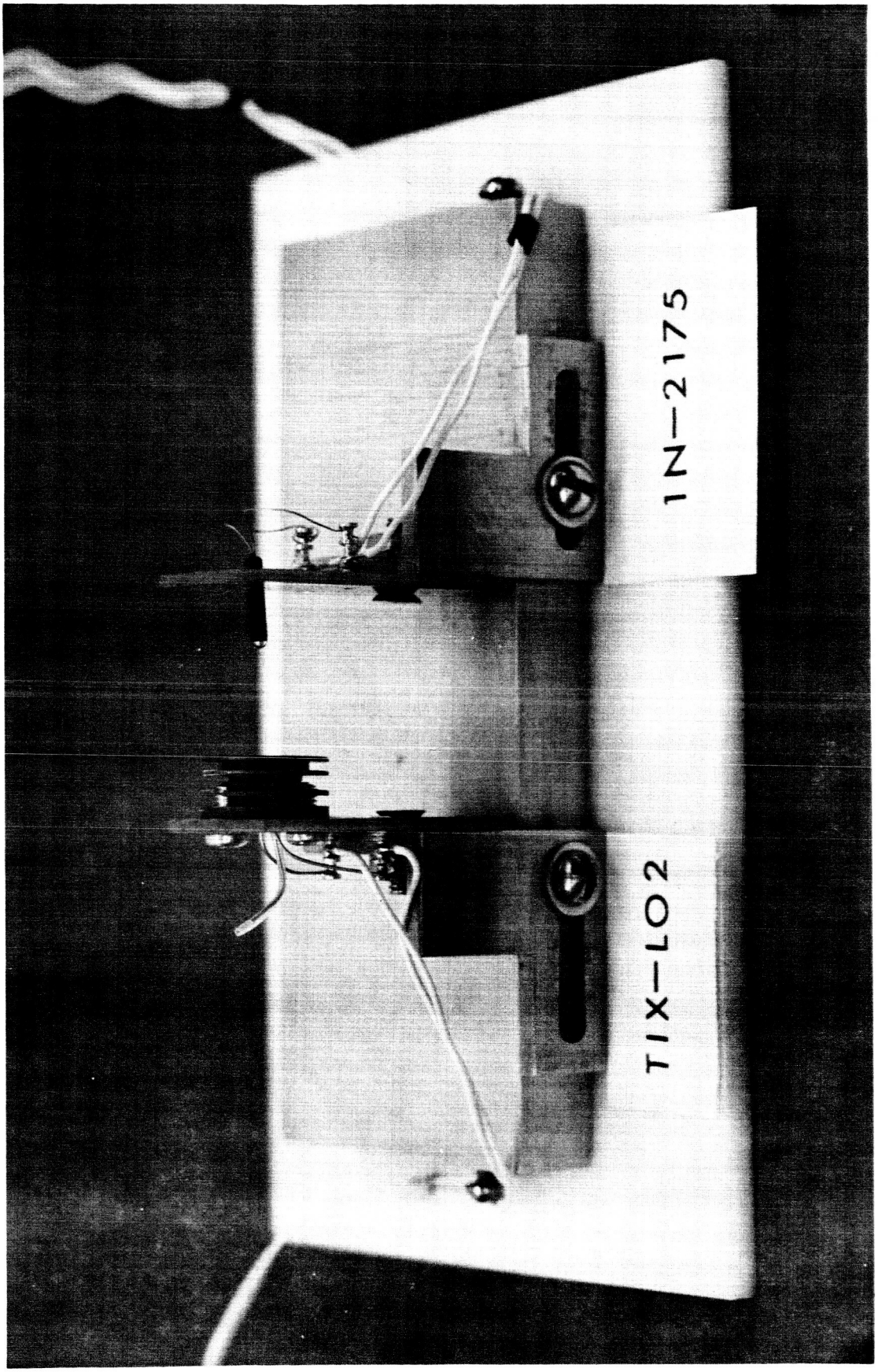


TEST SET-UP OF THE T1X-L02 DIODE LIGHT SOURCE AND 1N-2175 SENSOR, THE SENSOR IS ONE-HALF INCH FROM THE SOURCE LENS.

# DATA SHEET

AMBIENT TEMP. _____

| READING No. | EMITTER [1] VOLTAGE VDC | EMITTER CURRENT MA | SENSOR VOLTAGE, VDC $D_1$ NOSE TO NOSE | $D_2$ 1/8" | $D_3$ = 1/4" | $D_4$ = 1/2" | $D_5$ = 1" |
|---|---|---|---|---|---|---|---|
| 1 | 1.0 | 5.0 ma | 9.8 mv | 7.0 mv | | | |
| 2 | 1.03 | 10.0 | 24.6 mv | 18.0 mv | 11.0 mv | 4.0 mv | 1.4 mv |
| 3 | 1.04 | 15.0 | 41.0 mv | 31.0 mv | | | |
| 4 | 1.05 | 20.0 | 58.4 mv | 42.0 mv | | | |
| 5 | 1.07 | 25.0 | 75.4 mv | 57.0 mv | 33.4 mv | 13 mv | 5.5 mv |
| 6 | 1.09 | 50.0 | 155.2 mv | 118 mv | 75.7 mv | 32 mv | 12 mv |
| 7 | 1.1 | 75.0 | 248 mv | 175 mv | | | |
| 8 | 1.11 | 100.0 | 311.5 mv | 236 mv | 148.2 mv | 67 mv | 25 mv |
| 9 | 1.11 | 125.0 | 380. mv | 258 mv | | | |
| 10 | 1.12 | 150.0 | 447. mv | 333 mv | | | |
| 11 | 1.14 | 200.0 | 564 mv | 422 mv | 273.0 mv | 137 mv | 50 mv |
| 12 | 1.13 | 250.0 | 651 mv | 510 mv | | | |
| 13 | 1.15 | 300.0 | 747 mv | 578 mv | 362.5 mv | 185 mv | 72 mv |
| 14 | 1.16 | 350.0 | 812 mv | 631 mv | | | |
| 15 | 1.17 | 400.0 | 889 mv | 677 mv | 456.8 mv | 220 mv | 85 mv |
| 16 | 1.18 | 450.0 | 928 mv | 715 mv | | | |
| 17 | 1.18 | 500.0 | 980 mv | 765 mv | 509.0 mv | 246 mv | 96 mv |
| 18 | 1.18 | [1] 550.0 | 1.021 | | | | |
| 19 | 1.19 | 600.0 | 1.070 | | | | |
| 20 | 1.20 | 650.0 | 1.091 | | | | |
| 21 | 1.20 | 700. | 1.117 | | | | |
| 22 | 1.20 | 750. | 1.133 | | | | |
| 23 | 1.21 | 800. | 1.152 | | | | |
| 24 | 1.22 | 850. | 1.161 | | | | |

[1] Maximum Power dissipation (Product of emitter V and I) must not exceed 1 watt at 25°C. Derate 15 mw/°C.

| | INITIALS | DATE | REV BY INITIALS | DATE | TITLE | MODEL |
|---|---|---|---|---|---|---|
| TECH | | | | | | |
| CHECK | | | | | | |
| APPD | | | | | | |
| APPD | | | | | | |

| READING NO. FROM SHEET 2 | SENSOR CURRENT, μ amp $I_s = \frac{V_R}{5k\Omega}$ | | | | |
|---|---|---|---|---|---|
| | D1 | D2 | D3 | D4 | D5 |
| 1 | 1.96 | 1.4 | | | |
| 2 | 4.92 | 3.6 | 2.2 | .8 | .28 |
| 3 | 8.2 | 6.2 | | | |
| 4 | 11.7 | 8.4 | | | |
| 5 | 15.05 | 11.4 | 6.7 | 2.6 | 1.1 |
| 6 | 31.0 | 23.6 | 15.1 | 6.4 | 2.4 |
| 7 | 49.6 | 35.0 | | | |
| 8 | 62.3 | 47.2 | 29.6 | 13.4 | 5.0 |
| 9 | 76.0 | 51.7 | | | |
| 10 | 89.5 | 66.7 | | | |
| 11 | 113.0 | 84.0 | 54.6 | 27.4 | 10. |
| 12 | 130. | 102.0 | | | |
| 13 | 149. | 115.5 | 72.5 | 37.0 | 14.4 |
| 14 | 162. | 126. | | | |
| 15 | 178. | 135. | 91.5 | 44.0 | 17.0 |
| 16 | 185.5 | 143. | | | |
| 17 | 196. | 153. | 102. | 49.3 | 19.2 |
| 18 | 204 | | | | |
| 19 | 214 | | | | |
| 20 | 218.5 | | | | |
| 21 | 222.5 | | | | |
| 22 | 227.0 | | | | |
| 23 | 230.5 | | | | |
| 24 | 232.5 | | | | |

| | INITIALS | DATE | REV BY INITIALS | DATE | TITLE | MODEL |
|---|---|---|---|---|---|---|
| CALC | RJZ | 9 Feb66 | | | | |
| CHECK | | | | | | |
| APPD. | | | | | | |
| APPD. | | | | | | |

U3 4038 8000 REV 10-64

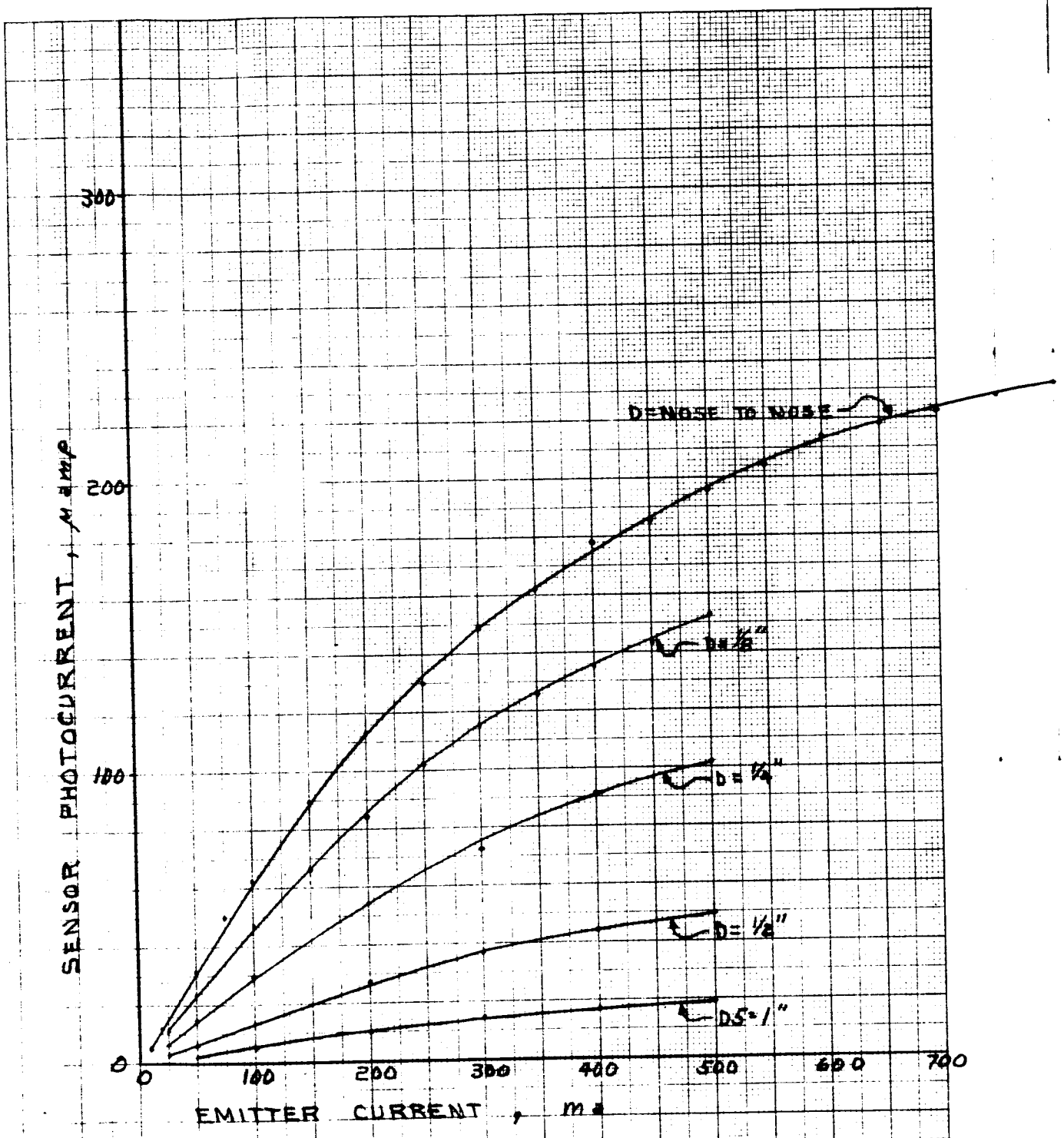


PHOTOCURRENT IN IN2175 SENSOR WITH 5KΩ SERIES RESISTOR AS A FUNCTION OF TIX-102 ENERGY EMITTER FORWARD CURRENT AT VARIOUS SEPARATION DISTANCES, D.

RJZ 10 Feb 66 REVISED DATE

DATA SET 2 SECTION 1



THE BOEING COMPANY

SEATTLE, WASHINGTON

PAGE SH 4

# DATA SHEET

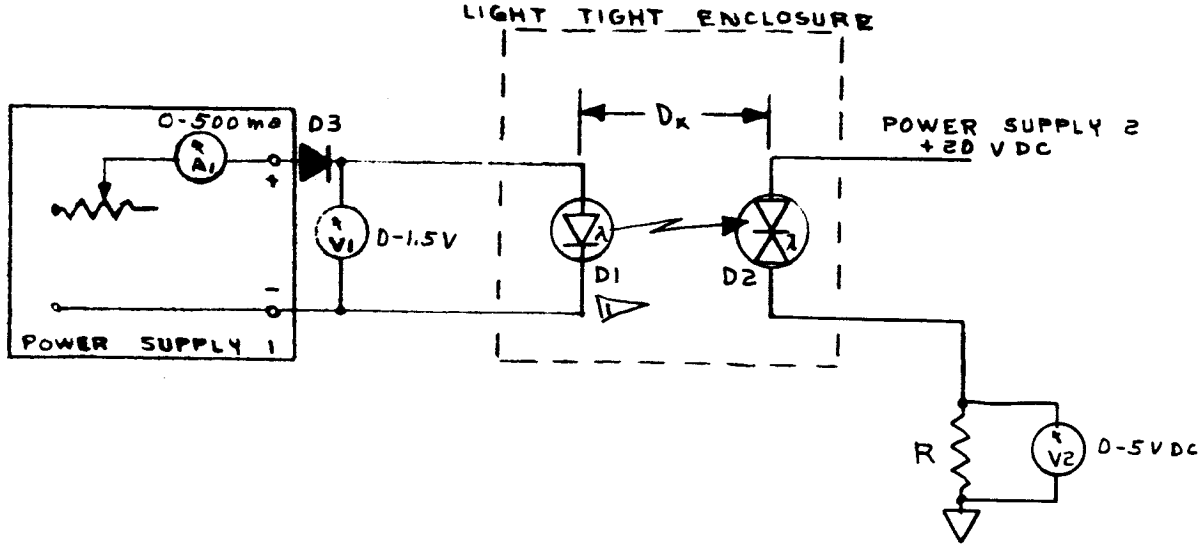


## TEST SETUP

TEST EQUIPMENT LIST

| | |
|---|---|
| CURRENT REGULATED POWER SUPPLY 1 | – Lambda LE-102 |
| POWER SUPPLY 2 | – TRYGON M36-15A S/N 7774 |
| VOLTMETER 1 | – HATHAWAY R21 S/N 531312 |
| VOLTMETER 2 | – FLUKE 803B S/N 1460 |
| AMMETER A1 | – POLYRANGER 88 S/N 156760 |

PARTS LIST

D1 – LED-11 [1] UNIT #7278
D2 – IN 2175
R – 5 KΩ, Decade Box, GR
D3 – IN538

[1] Do not operate without Thermalloy #2218A Heat sink
SAFETY PRECAUTIONS: Maximum current through D1 = 550 ma.

| | INITIALS | DATE | REV BY INITIALS | DATE | TITLE | MODEL |
|---|---|---|---|---|---|---|
| TECH | | | | | Device Transfer Characteristics - LED-11 Source and IN-2175 Sensor | |
| CHECK | R S L | 9 Feb 66 | | | | |
| APPD | | | | | | |
| APPD | | | | | | |

# DATA SHEET

AMBIENT TEMP. _____

| READING No. | EMITTER [1] VOLTAGE VDC | EMITTER [1] CURRENT MA | SENSOR VOLTAGE, VDC D1 [2] NOSE TO NOSE | D2 [3] 1/16" | D3 = 1/4" [3] | [3] D4 = 1/2" | [3] D5 4 5/8" | D6 = 1" [3] |
|---|---|---|---|---|---|---|---|---|
| 1 | 1.11 | 25.0 ma | 310 mv | 130.7mv | | | | |
| 2 | 1.14 | 50.0 | 602 mv | 265.5mv | 133 mv | 51.0mv | | 16.0 mv |
| 3 | 1.16 | 75.0 | 830 mv | 376. mv | | | | |
| 4 | 1.18 | 100.0 | 1.073 v | 480 mv | 263 mv | 105 mv | 20 mv | 34.6 mv |
| 5 | 1.19 | 125.0 | 1.265 v | 578 mv | | | | |
| 6 | 1.20 | 150.0 | 1.434 v. | 655 mv | 359 mv | 150mv. | | 49.8 mv |
| 7 | 1.21 | 175.0 | 1.543 v. | 728 mv | | | | |
| 8 | 1.22 | 200.0 | 1.675 v. | 778 mv | 444 mv | 191 mv | 47.6mv | 63 mv |
| 9 | 1.23 | 225.0 | 1.780 v. | 826 mv | | | | |
| 10 | 1.24 | 250.0 | 1.910 v. | 880 mv | 511 mv | 218 mv | | 73.5 mv |
| 11 | 1.24 | 275.0 | 1.990 v. | 906 mv | | | | |
| 12 | 1.25 | 300.0 | 2.073 v. | 940 mv | 562 mv | 242 mv | 75 mv | 82.0mv |
| 13 | 1.26 | 325.0 | 2.152 v. | 970 mv | | | | |
| 14 | 1.26 | 350.0 | 2.192 v. | 987 mv | 576 mv | 263 mv | | 89.0mv |
| 15 | 1.27 | 375.0 | 2.250 v | 1.012 | | | | |
| 16 | 1.28 | 400.0 | 2.300 v | 1.031 | 610 mv | 275 mv | 95 mv | 93.4 mv |
| 17 | 1.29 | 425.0 | 2.325 v. | 1.042 | | | | |
| 18 | 1.29 | [1] 450.0 | 2.357 | 1.056 | 633 mv | 285 mv | | 97.0 mv |
| 19 | 1.30 | 475.0 | 2.382 v. | 1.064 | | | | |
| 20 | 1.31 | 500.0 | 2.413 | 1.074 | 650 mv | 292 mv | 117.6 mv | 97.9 mv |
| 21 | 1.31 | 550. | | 1.086 | | | | |
| 22 | 1.32 | 600 | | 1.090 | | | | |
| 23 | 1.33 | 650 | | 1.087 | | | | |

[3] With lens cap off LED-11

[3] with lens cap on LED-11

[1] Maximum Power Dissipation (Product of Emitter V·I) must not exceed 0.95 watt at 25°C. Derate 13 mw/°C.

| | INITIALS | DATE | REV BY INITIALS | DATE | TITLE | MODEL |
|---|---|---|---|---|---|---|
| TECH | | | | | | |
| CHECK | RJZ | 9Feb66 | | | | |
| APPD | | | | | | |
| APPD | | | | | | |

| READING NO. FROM SHEET 2 | SENSOR CURRENT, μ amp $I_s = \frac{V_R}{5k\Omega}$ | | | | | |
|---|---|---|---|---|---|---|
| | D1 | D2 | D3 | D4 | D5 | D6 |
| 1 | 62. | 26 | | | | |
| 2 | 120 | 44.3 | 26.6 | 10.2 | | 3.2 |
| 3 | 166 | 75.2 | | | | |
| 4 | 215 | 96. | 52.7 | 21. | 4. | 6.92 |
| 5 | 253 | 115.5 | | | | |
| 6 | 287 | 131. | 72. | 30. | | 9.97 |
| 7 | 309 | 145.5 | | | | |
| 8 | 335 | 155.5 | 89. | 38.2 | 9.55 | 12.6 |
| 9 | 356 | 165. | | | | |
| 10 | 382 | 176. | 102. | 43.7 | | 14.7 |
| 11 | 398 | 181. | | | | |
| 12 | 415 | 188. | 112. | 48.5 | 15.0 | 16.4 |
| 13 | 430 | 194. | | | | |
| 14 | 438 | 197. | 115. | 52.7 | | 17.8 |
| 15 | 450 | 202.5 | | | | |
| 16 | 460 | 206.5 | 122. | 55. | 19. | 18.7 |
| 17 | 465 | 208.5 | | | | |
| 18 | 471 | 211. | 127. | 57. | | 19.4 |
| 19 | 476 | 213. | | | | |
| 20 | 482 | 215. | 130. | 58.5 | 23.5 | 20. |
| 21 | | 217. | | | | |
| 22 | | 218. | | | | |
| 23 | | 217.5 | | | | |
| 24 | | | | | | |

| | INITIALS | DATE | REV BY INITIALS | DATE | TITLE | MODEL |
|---|---|---|---|---|---|---|
| CALC | RJI | 10 Feb66 | | | | |
| CHECK | \ | | | | | |
| APPD. | | | | | | |
| APPD. | | | | | | |

U3 4038 8000 REV 10-64

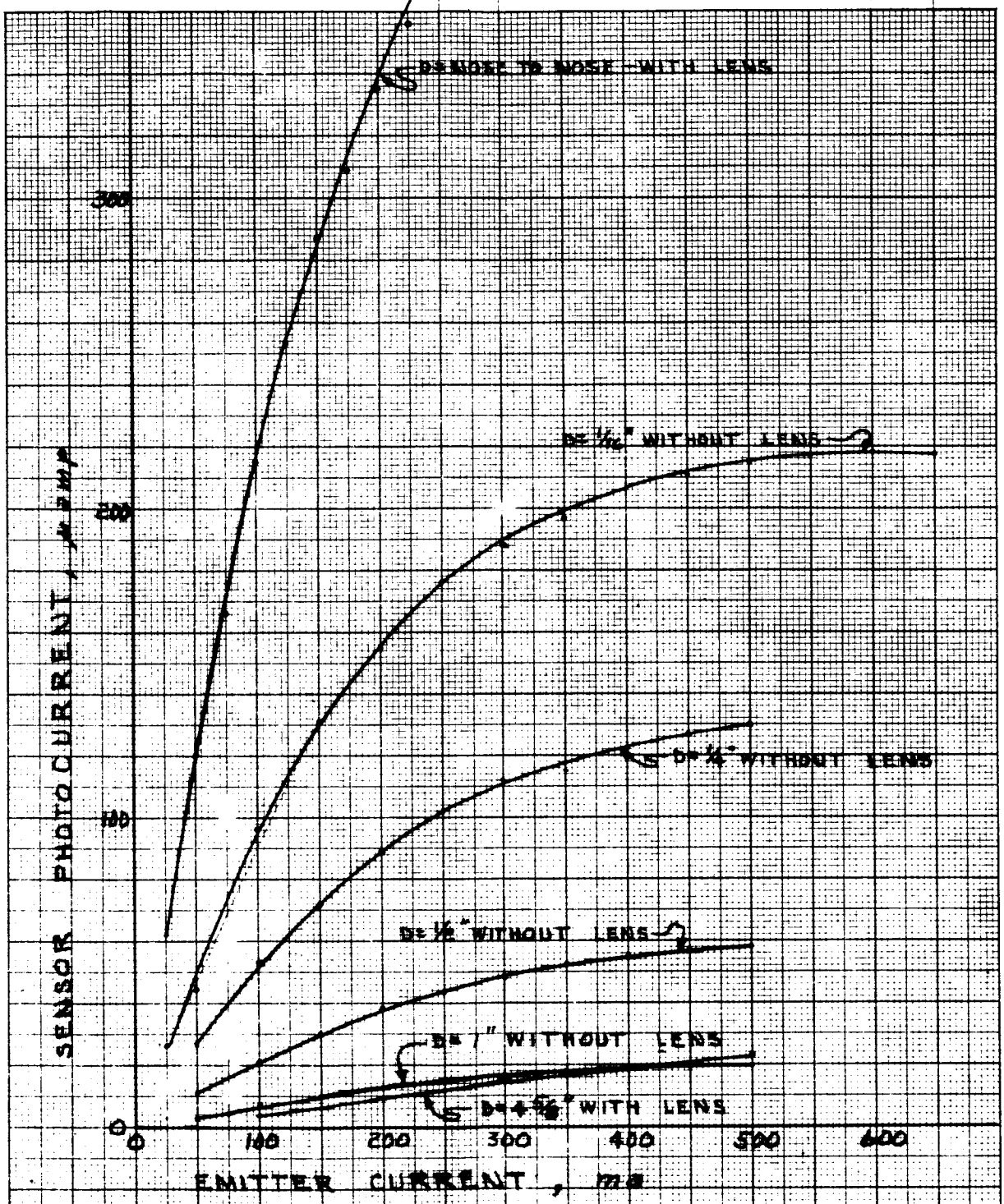


PHOTO CURRENT IN IN2175 SENSOR WITH 5K Ω SERIES RESISTOR AS A FUNCTION OF LED-11 ENERGY EMITTER FORWARD CURRENT WITH AND WITHOUT LENS CAP AT VARIOUS SEPARATION DISTANCES, D.

| CALC | R.L. 10 Feb 66 | REVISED | DATE |
|---|---|---|---|
| CHECK | | | |
| APPR | | | |
| APPR | | | |

DATA SET 3 SECTION 1



THE BOEING COMPANY
SEATTLE 24, WASHINGTON

REMARKS:

Alignment of the emitter and sensor with the lens cap on the emitter to obtain optimum coupling is very difficult. It appears that optimum coupling can be obtained with a separation of 5/8 inch.

The alignment was not critical with the lens cap removed but detected energy at the sensor was greatly reduced due to the broad radiation cone.

# DATA SHEET

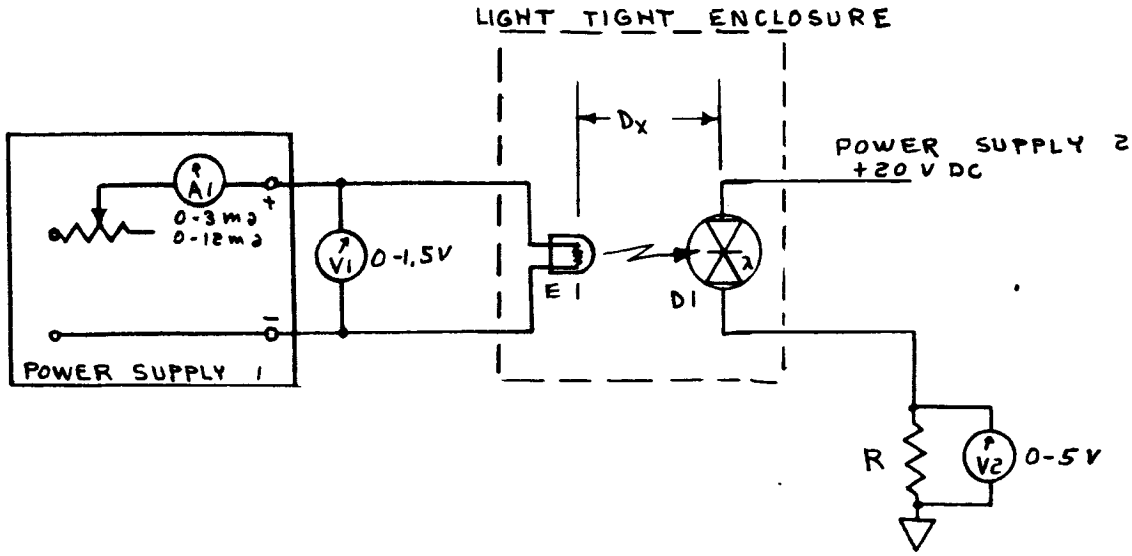


## TEST SET UP

TEST EQUIPMENT LIST

POWER SUPPLY 1 - Lambda LE-102 (CURRENT REGULATED)
POWER SUPPLY 2 - TRYGON M36-15A
VOLTMETER 1 - Hathaway R21 S/N 531312
VOLTMETER 2 - Fluke 803B S/N 1460
AMMETER 1 - Polyranger 88 S/N 156760

PARTS LIST

E1 - Pinlite L12-3
- Pinlite L12-12
D1 - IN2175
R - 5 KΩ, Decade Box - GR

SAFETY PRECAUTIONS: Maximum current - L12-3 = 3 ma @ 1.25V
- L12-12 = 12 ma @ 1.25V

| | INITIALS | DATE | REV BY INITIALS | DATE | TITLE | MODEL |
|---|---|---|---|---|---|---|
| TECH | | | | | Device Transfer Characteristics - L12-3 and L12-12 Sources and IN-2175 Sensor | |
| CHECK | RJZ | 11Feb66 | | | | |
| APPD | | | | | | |
| APPD | | | | | | |

U3 4038 8000 REV 10 64

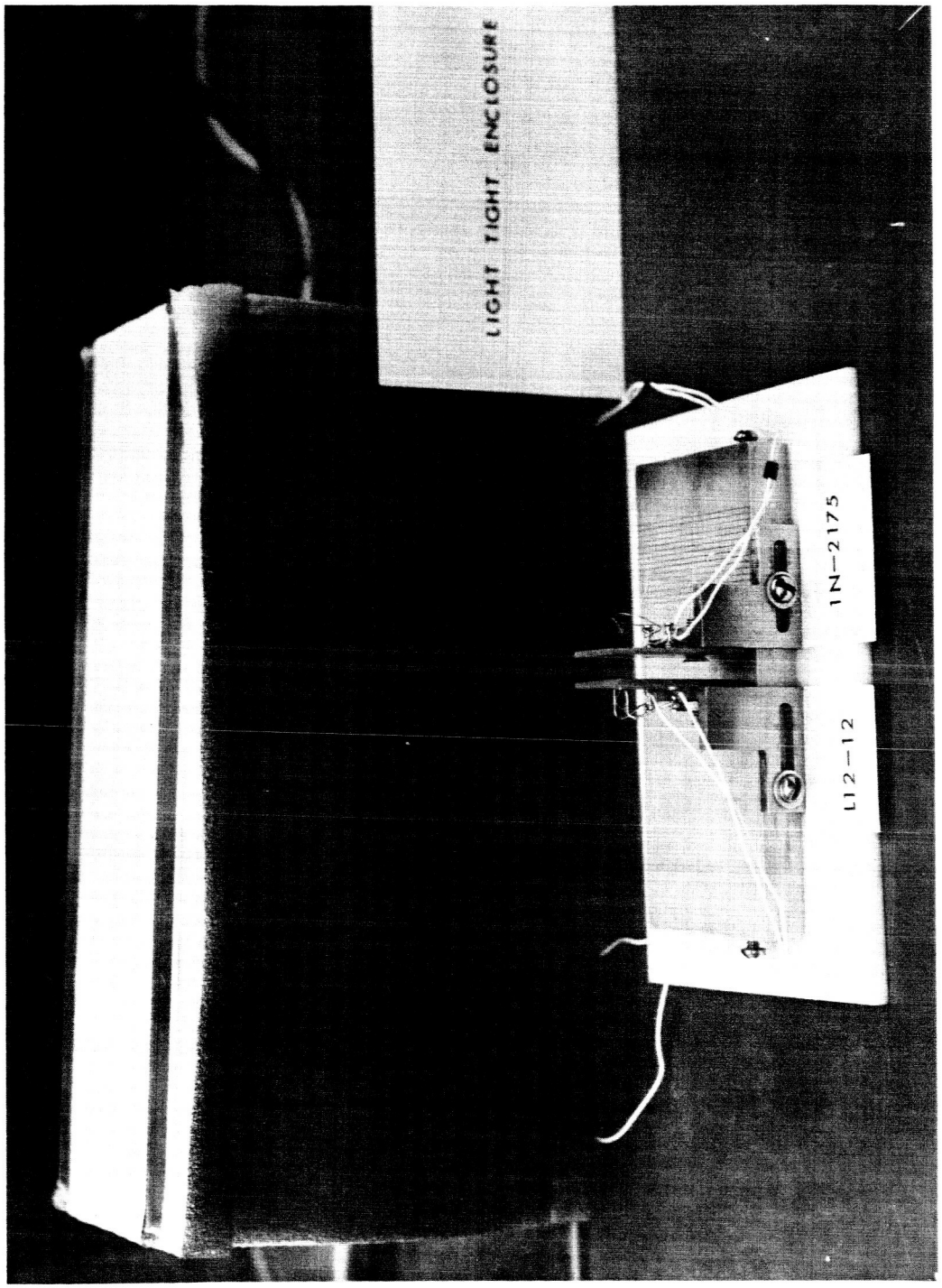


TEST SET-UP OF THE L12-12 INCANDESCENT BULB AND 1N-2175 SENSOR

# DATA SHEET

AMBIENT TEMP. _____

| READING No. | | EMITTER VOLTAGE VDC | EMITTER CURRENT MA | SENSOR VOLTAGE, VDC $D_1$ NOSE TO NOSE | $D_2$ 1/8" | $D_3$ = 1/4" | $D_4$ = 1/2" |
|---|---|---|---|---|---|---|---|
| L12-3 | 1 | 0.7 | 2.3 | 28 mv | 14 mv | 10 mv | 3 |
| | 2 | 0.75 | 2.4 | 37 mv | 18 | 13 | 4 |
| | 3 | 0.80 | 2.45 | 50 mv | 25 | 17 | 6 |
| | 4 | 0.85 | 2.5 | 64 mv | 32 | 21 | 8 |
| | 5 | 0.90 | 2.6 | 81 mv | 41 | 27 | 10 |
| | 6 | 0.95 | 2.65 | 100 mv | 50 | 33 | 12 |
| | 7 | 1.00 | 2.75 | 120 mv | 61 | 40 | 14 |
| | 8 | 1.05 | 2.8 | 143 mv | 74 | 48 | 22 |
| | 9 | 1.10 | 2.9 | 172 mv | 91 | 60 | 27 |
| | 10 | 1.15 | 2.95 | 195 mv | 103 | 68 | 31 |
| | 11 | 1.20 | 3.00 | 218 mv | | | |
| | 12 | 1.25 | | | | | |
| L12-12 | 1 | 0.7 | 9.8 ma | 363 mv | 241 mv | 201 mv | 97 mv |
| | 2 | 0.75 | 10.0 ma | 482 mv | 325 mv | 260 mv | 130 mv |
| | 3 | 0.80 | 10.3 ma | 613 mv | 423 mv | 343 mv | 170 mv |
| | 4 | 0.85 | 10.55 ma | 781 mv | 524 mv | 417 mv | 214 mv |
| | 5 | 0.90 | 10.8 ma | 950 mv | 638 mv | 510 mv | 262 mv |
| | 6 | 0.95 | 11.0 ma | 1.131 v | 771 mv | 611 mv | 310 mv |
| | 7 | 1.00 | 11.3 ma | 1.34 v | 911 mv | 718 mv | 368 mv |
| | 8 | 1.05 | 11.5 ma | 1.558 v | 1.045 v | 850 mv | 442 mv |
| | 9 | 1.10 | 11.8 ma | 1.806 v | 1.222 v | 1.000 mv | 516 mv |
| | 10 | 1.13 | 11.9 | 1.89 v | 1.302 | | |
| | 11 | 1.20 | | | | | |
| | 12 | 1.25 | | | | | |

| | INITIALS | DATE | REV BY INITIALS | DATE | TITLE | MODEL |
|---|---|---|---|---|---|---|
| TECH | | | | | | |
| CHECK | RJZ | 11 Feb 66 | | | | |
| APPD | | | | | | |
| APPD | | | | | | |

| READING No. FROM PAGE 2 | SENSOR CURRENT, μ amp $I_s = \frac{V_R}{5\,k\Omega}$ | | | | |
|---|---|---|---|---|---|
| | D1 | D2 | D3 | D4 | |
| L12 - 3 | | | | | |
| 1 | 5.6 | 2.8 | 2.0 | .6 | |
| 2 | 7.4 | 3.6 | 2.6 | .8 | |
| 3 | 10. | 5.0 | 3.4 | 1.2 | |
| 4 | 12.8 | 6.4 | 4.2 | 1.6 | |
| 5 | 16.2 | 8.2 | 5.4 | 2.0 | |
| 6 | 20. | 10.0 | 6.6 | 2.4 | |
| 7 | 24. | 12.2 | 8.0 | 2.8 | |
| 8 | 28.6 | 14.8 | 9.6 | 4.4 | |
| 9 | 34.4 | 18.2 | 12.0 | 5.4 | |
| 10 | 39. | 20.6 | 13.6 | 6.2 | |
| 11 | 43.7 | | | | |
| 12 | | | | | |
| L12 - 12 | | | | | |
| 1 | 72.6 | 48.2 | 40.2 | 19.4 | |
| 2 | 96.5 | 65.0 | 52.0 | 26. | |
| 3 | 122.5 | 84.7 | 68.7 | 34. | |
| 4 | 156. | 105. | 83.5 | 42.8 | |
| 5 | 190. | 128. | 102. | 52.5 | |
| 6 | 226.5 | 154. | 122. | 62.0 | |
| 7 | 268. | 182. | 144. | 73.5 | |
| 8 | 312. | 208.5 | 170. | 88.5 | |
| 9 | 362. | 242. | 200. | 103. | |
| 10 | 378. | 260. | | | |
| 11 | | | | | |
| 12 | | | | | |

| | INITIALS | DATE | REV BY INITIALS | DATE | TITLE | MODEL |
|---|---|---|---|---|---|---|
| CALC | RJZ | 11Feb6 | | | | |
| CHECK | | | | | | |
| APPD. | | | | | | |
| APPD. | | | | | | |

U3 4038 8000 REV. 10-64

REV LTR

BOEING NO. D5-13268-3

DATA SET 4, SECTION 1 SH. 3 A-44

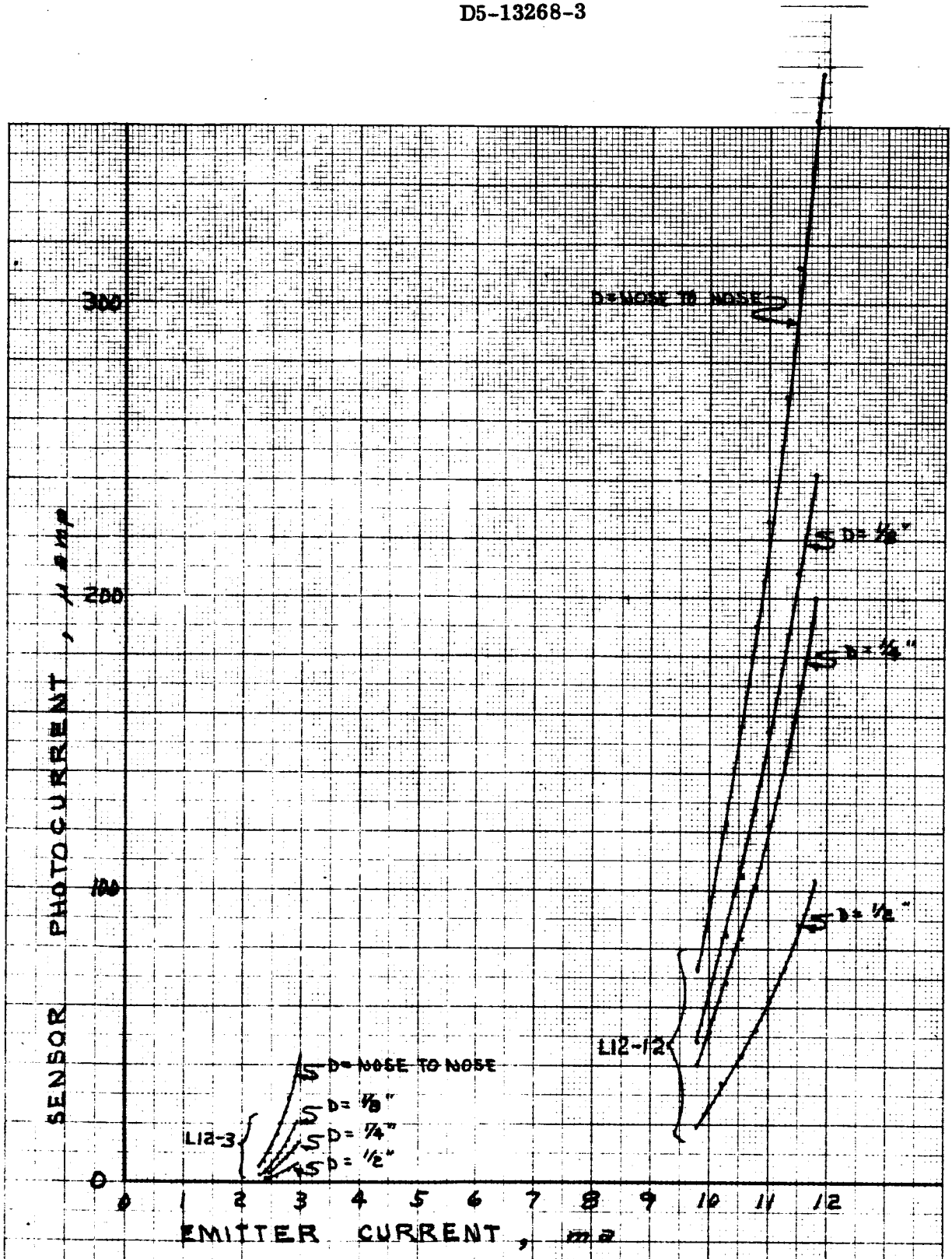


PHOTOCURRENT IN IN2175 SENSOR WITH 5K Ω SERIES RESISTOR AS A FUNCTION OF L12-12 AND L12-3 INCANDESCENT ENERGY SOURCE CURRENT AT VARIOUS SEPARATION DISTANCES, D.

| | | | |
|---|---|---|---|
| CALC | R J 11 Feb 66 | REVISED DATE | |
| CHECK | | | |
| APPR | | | DATA SET 4 SECTION 1 |
| APPR | | | A-45 THE BOEING COMPANY SEATTLE 24, WASHINGTON |
| | | | PAGE SH 4 |

# DATA SHEET

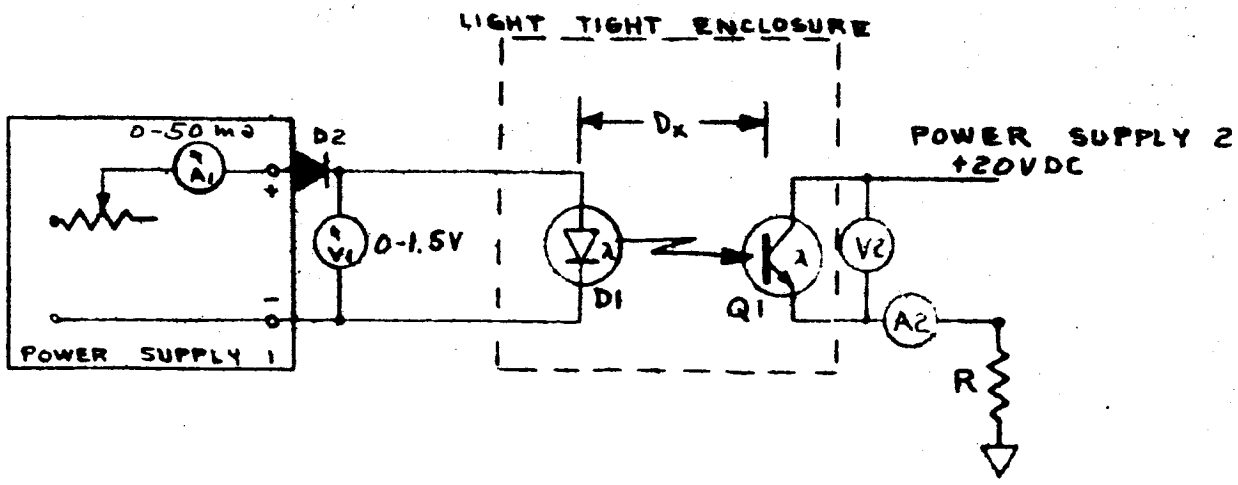


## TEST SET UP

TEST EQUIPMENT LIST

POWER SUPPLY 1 – Lambda LE-102
POWER SUPPLY 2 – TRYGON M36-15A
VOLTMETER 1 – Hathaway R21
VOLTMETER 2 – FLUKE 803B
AMMETER 1 – POLYRANGER 88
AMMETER 2 – BOONTON ELECTR. 95A

PARTS LIST

D1 – TIX-L01
Q1 – LSX-600
R – 2 KΩ, DECADE BOX-GR
D2 – 1N538

SAFETY PRECAUTIONS: Maximum Current through D1 = 50 ma
Maximum Voltage across R = 5 VDC

| | INITIALS | DATE | REV BY INITIALS | DATE | TITLE | MODEL |
|---|---|---|---|---|---|---|
| TECH | | | | | Device Transfer Characteristics - TIX-L01 Source and LS-600 Sensor | |
| CHECK | RJZ | 11 Feb | | | | |
| APPD. | | | | | | |
| APPD | | | | | | |

U3 4038 8000 REV 10 64

REV LTR

# DATA SHEET

AMBIENT TEMP. _____

| READING No. | EMITTER VOLTAGE VDC | EMITTER CURRENT MA | SENSOR CURRENT μa D1 NOSE TO NOSE | D2 1/8" | D3 = 1/4" | D4 = 1/2" | D5 = 1" |
|---|---|---|---|---|---|---|---|
| 1 | 1.05 v | 2.5 ma | 2.04 ma | .832 ma | .58 | .46 | .4 |
| 2 | 1.08 | 5.0 | 6.80 | 2.58 | 1.35 | .7 | .46 |
| 3 | 1.10 | 7.5 | 16.0 | 4.74 | 2.55 | 1.15 | .56 |
| 4 | 1.12 | 10.0 | 29.0 | 8.60 | 4.2 | 1.75 | .72 |
| 5 | 1.13 | 12.5 | 41.8 | 14.0 | 6.35 | 2.40 | .87 |
| 6 | 1.14 | 15.0 | 60.0 | 21.0 | 8.5 | 3.5 | 1.2 |
| 7 | 1.15 | 17.5 | 80.0 | 23.4 | 11.5 | 4.5 | 1.47 |
| 8 | 1.16 | 20.0 | 109 | 26.2 | 14.0 | 5.45 | 1.8 |
| 9 | 1.17 | 22.5 | 128 | 40.5 | 17.0 | 6.5 | 2.13 |
| 10 | 1.18 | 25.0 | 150 | 48.0 | 20.8 | 7.8 | 2.45 |
| 11 | 1.18 | 27.5 | 179 | 55.0 | 24.0 | 9.1 | 2.85 |
| 12 | 1.19 | 30.0 | 210 | 64.0 | 27.5 | 11.0 | 3.4 |
| 13 | 1.19 | 32.5 | 238 | 74.0 | 33.5 | 12.0 | 3.8 |
| 14 | 1.19 | 35.0 | 270 | 80.0 | 36.0 | 13.5 | 4.3 |
| 15 | 1.19 | 37.5 | 292 | 91.5 | 41.0 | 15.0 | 4.7 |
| 16 | 1.20 | 40.0 | 320 | 100 | 47.0 | 16.7 | 5.2 |
| 17 | 1.20 | 42.5 | 370 | 115 | 50.0 | 18.0 | 5.7 |
| 18 | 1.20 | 45.0 | 400 | 123 | 55.0 | 19.7 | 6.2 |
| 19 | 1.21 | 47.5 | 445 | 132 | 60.0 | 21.5 | 6.7 |
| 20 | 1.21 | 50.0 ▷ | 485 | 145 | 64.5 | 23.0 | 7.4 |

▷ Do not perform this step if ambient temperature exceeds 25°c. Do not remain on this step very long.

| | INITIALS | DATE | REV BY INITIALS | DATE | TITLE | MODEL |
|---|---|---|---|---|---|---|
| TECH | | | | | | |
| CHECK | RJZ | 11 Feb66 | | | | |
| APPD. | | | | | | |
| APPD | | | | | | |

U3 4038 8000 REV 10 64

REV LTR _____

BOEING NO D5-13268-3

DATA SET 5, SECTION 1 SH 2 A-47

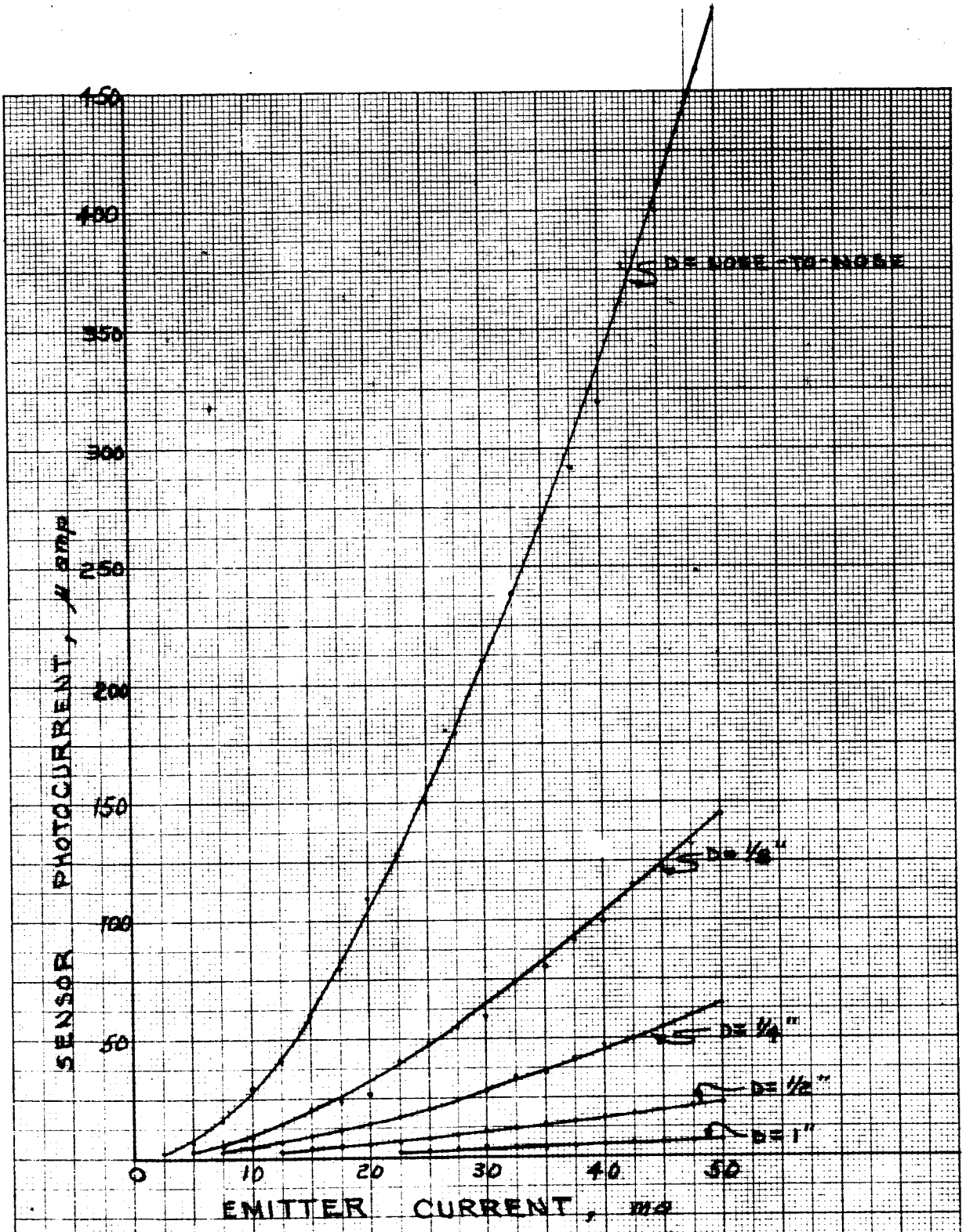


PHOTOCURRENT IN LSX-600 SENSOR WITH 2K Ω SERIES RESISTOR AS A FUNCTION OF TIX-101 EMITTER FORWARD CURRENT AT VARIOUS SEPARATION DISTANCES, D.

| | | | | |
|---|---|---|---|---|
| CALC | R J T 15 Feb 66 | REVISED | DATE | |
| CHECK | | | | |
| APPR | | | | DATA SET 5, SECTION 1 |
| APPR | | | | A-48 THE BOEING COMPANY SEATTLE 24, WASHINGTON |
| | | | | PAGE SH 3 |

PRINTED IN U.S.A.

REMARKS:

1. Emitter/Sensor alignment for optimum photon coupling for a given separation is extremely critical.

2. Deviations from the curves plotted on sheet 4 are probably due to the reading being taken before the effect of self-heating was allowed to stabilize.

# DATA SHEET

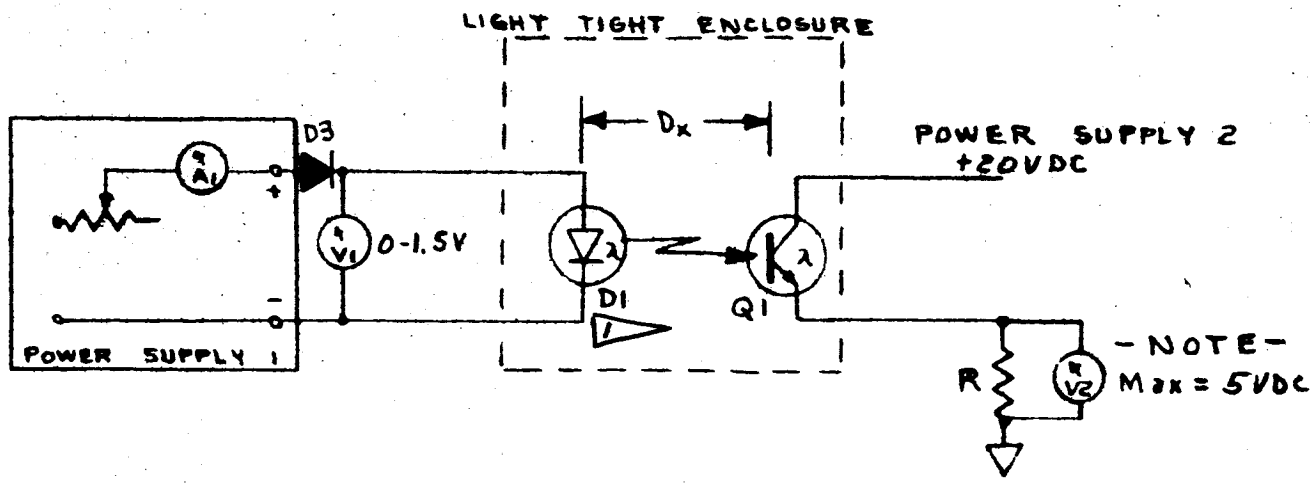


## TEST SETUP

TEST EQUIPMENT LIST

| | | |
|---|---|---|
| CURRENT REGULATED POWER SUPPLY 1 | - Lambda | LE-102 |
| POWER SUPPLY 2 | - TRYGON | M36-15A |
| VOLTMETER 1 | - HATHAWAY | R21 |
| VOLTMETER 2 | - FLUKE | 803B |
| AMMETER 1 | - POLYRANGER | 88 |

PARTS LIST

D1 - TIX L02 ▷1

Q1 - LSX-600

R - 2 KΩ, .1%, 1/2 W (GR Decade Box)

D3 - IN538

▷1 Do not operate without Thermalloy #2218A Heat sink

SAFETY PRECAUTIONS : Maximum Current through D1 = 650 ma
Maximum Voltage across R = 5 VDC

| | INITIALS | DATE | REV BY INITIALS | DATE | TITLE | MODEL |
|---|---|---|---|---|---|---|
| TECH | | | | | Device Transfer Characteristics - TIX-L02 Source and LS-600 Sensor | |
| CHECK | RJF | 15Feb66 | | | | |
| APPD. | | | | | | |
| APPD | | | | | | |

03 4038 8000 REV 10 64

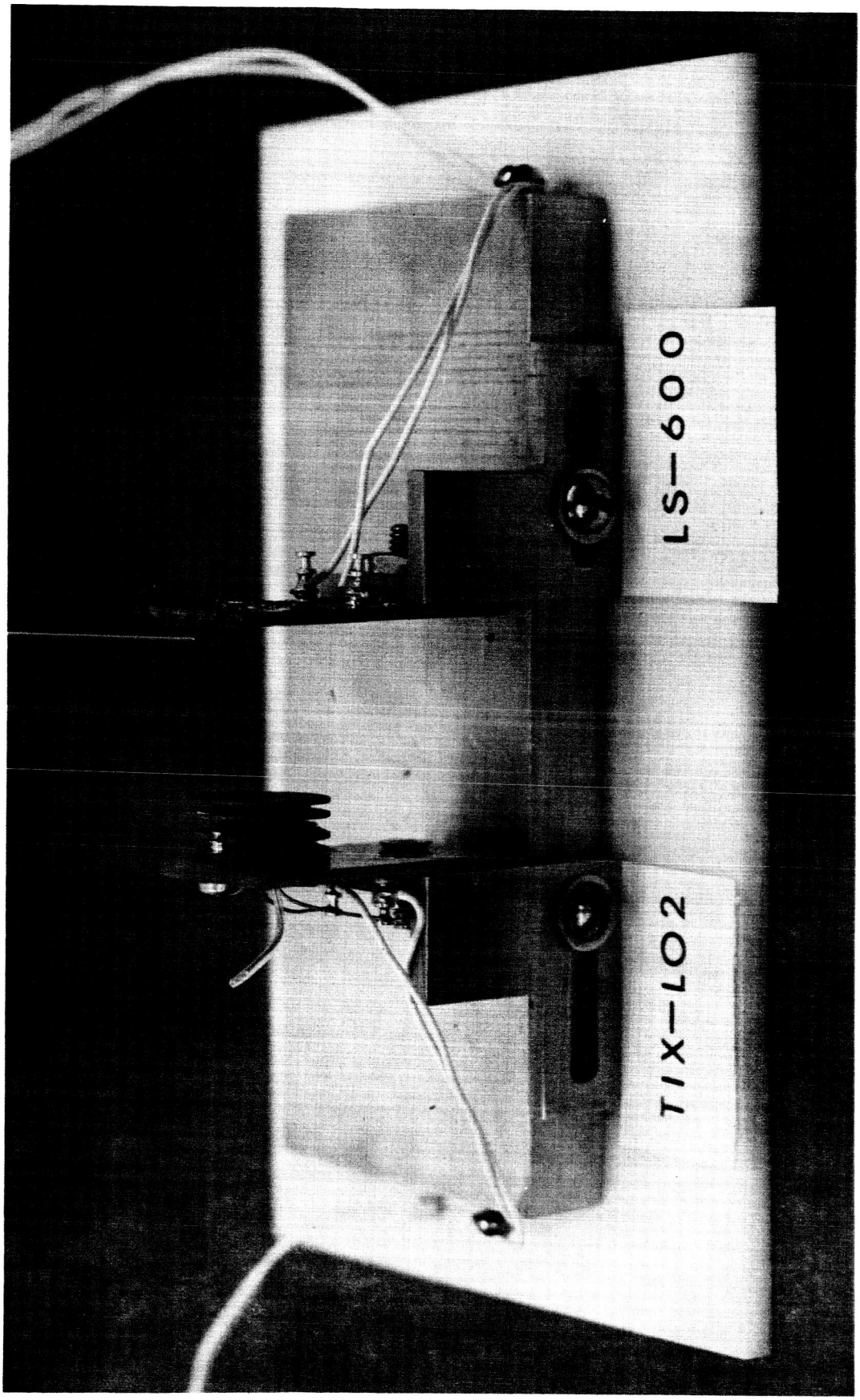


TEST SET-UP OF THE TIX-L02 DIODE LIGHT SOURCE AND LS-600 SENSOR.

# DATA SHEET

AMBIENT TEMP. _____

| READING No. | EMITTER [1] VOLTAGE VDC | EMITTER [1] CURRENT MA | SENSOR VOLTAGE, VDC $D_1$ NOSE TO NOSE | $D_2$ 1/8" | $D_3$ = 1/4" | $D_4$ = 1/2" | |
|---|---|---|---|---|---|---|---|
| | | | | | (mv) | (mv) | |
| 1 | 1.02 | 5.0 ma | 7 mv | 3 mv | 1 | | |
| 2 | 1.05 | 10.0 | 25 mv | 11 mv | 3 | 1 | |
| 3 | 1.07 | 15.0 | 41 mv | 21 mv | 7 | 2 | |
| 4 | 1.08 | 20.0 | 63 mv | 31 mv | 10 | 3 | |
| 5 | 1.09 | 25.0 | 86 mv | 42 mv | 14 | 3.3 | |
| 6 | 1.10 | 50.0 | 220 mv | 108 mv | 35 | 9 | |
| 7 | 1.12 | 75.0 | 378 mv | 181 mv | 58 | 15 | |
| 8 | 1.13 | 100.0 | 539 mv | 262 mv | 83 | 22 | |
| 9 | 1.14 | 125.0 | 703 mv | 340 mv | 104 | 28 | |
| 10 | 1.15 | 150.0 | 890 mv | 415 mv | 130 | 35 | |
| 11 | 1.16 | 200.0 | 1,200 | 572 mv | 179 | 48 | |
| 12 | 1.18 | 250.0 | 1,492 | 717 mv | 224 | 58 | |
| 13 | 1.19 | 300.0 | 1,840 | 818 mv | 261 | 68 | |
| 14 | 1.19 | 350.0 | 2,090 | 913 mv | 290 | 76 | |
| 15 | 1.20 | 400.0 | 2,313 | 990 mv | 312 | 84 | |
| 16 | 1.21 | 450.0 | 2,656 | 1,077 | 326 | 90 | |
| 17 | 1.22 | 500.0 | 2,758 | 1,160 | 347 | 93 | |
| 18 | 1.22 | [1] 550.0 | 2,912 | 1,204 | 366 | 98 | |
| 19 | 1.22 | 600.0 | 3,130 | 1,257 | 380 | 94 | |
| 20 | 1.24 | 650.0 | 3,257 | 1,285 | 392 | 98 | |

[1] Maximum Power Dissipation (Product of V·I) must not exceed 1 watt at 25°c. Derate 15 mw/°c.

| | INITIALS | DATE | REV BY INITIALS | DATE | TITLE | MODEL |
|---|---|---|---|---|---|---|
| TECH | | | | | | |
| CHECK | RJI | 15 Feb 66 | | | | |
| APPD | | | | | | |
| APPD | | | | | | |

| READING NO FROM SHEET 2 | SENSOR CURRENT, μamp $I_s = \frac{V_P}{2k\Omega}$ | | | |
|---|---|---|---|---|
| | D1 | D2 | D3 | D4 |
| 1 | 3.5 | 1.5 | .5 | |
| 2 | 12.5 | 6.5 | 1.5 | .5 |
| 3 | 20.5 | 10.5 | 3.5 | 1. |
| 4 | 31.5 | 15.5 | 5.0 | 1.5 |
| 5 | 43.0 | 21.0 | 7.0 | 1.65 |
| 6 | 110.0 | 54.0 | 17.5 | 4.5 |
| 7 | 189. | 90.5 | 29. | 7.5 |
| 8 | 269. | 131. | 41.5 | 11.0 |
| 9 | 351.5 | 170. | 54. | 14.0 |
| 10 | 445. | 207.5 | 65. | 17.5 |
| 11 | 600. | 286. | 89.5 | 24. |
| 12 | 747. | 358. | 112. | 29. |
| 13 | 920. | 409. | 130.5 | 34. |
| 14 | 1.045 ma | 456.5 | 145. | 38 |
| 15 | 1.15 ma | 495. | 156. | 42 |
| 16 | 1.33 ma | 538. | 163. | 45 |
| 17 | 1.38 ma | 580. | 173. | 46.5 |
| 18 | 1.45 ma | 602. | 183. | 49. |
| 19 | 1.565 ma | 628. | 190. | 47. |
| 20 | 1.625 ma | 642. | 196. | 49. |

| | INITIALS | DATE | REV BY INITIALS | DATE | TITLE | MODEL |
|---|---|---|---|---|---|---|
| CALC | | | | | | |
| CHECK | | | | | | |
| APPD. | | | | | | |
| APPD. | | | | | | |

U3 4038 8000 REV. 10-64

REMARKS:

1. This combination of emitter (T1X-L02) and sensor (LS-600) was the most difficult to align for optimum coupling.

2. Deviations from the curves plotted on sheet 5 are probably due to the reading being taken before the effect of self-heating was allowed to stabilize.

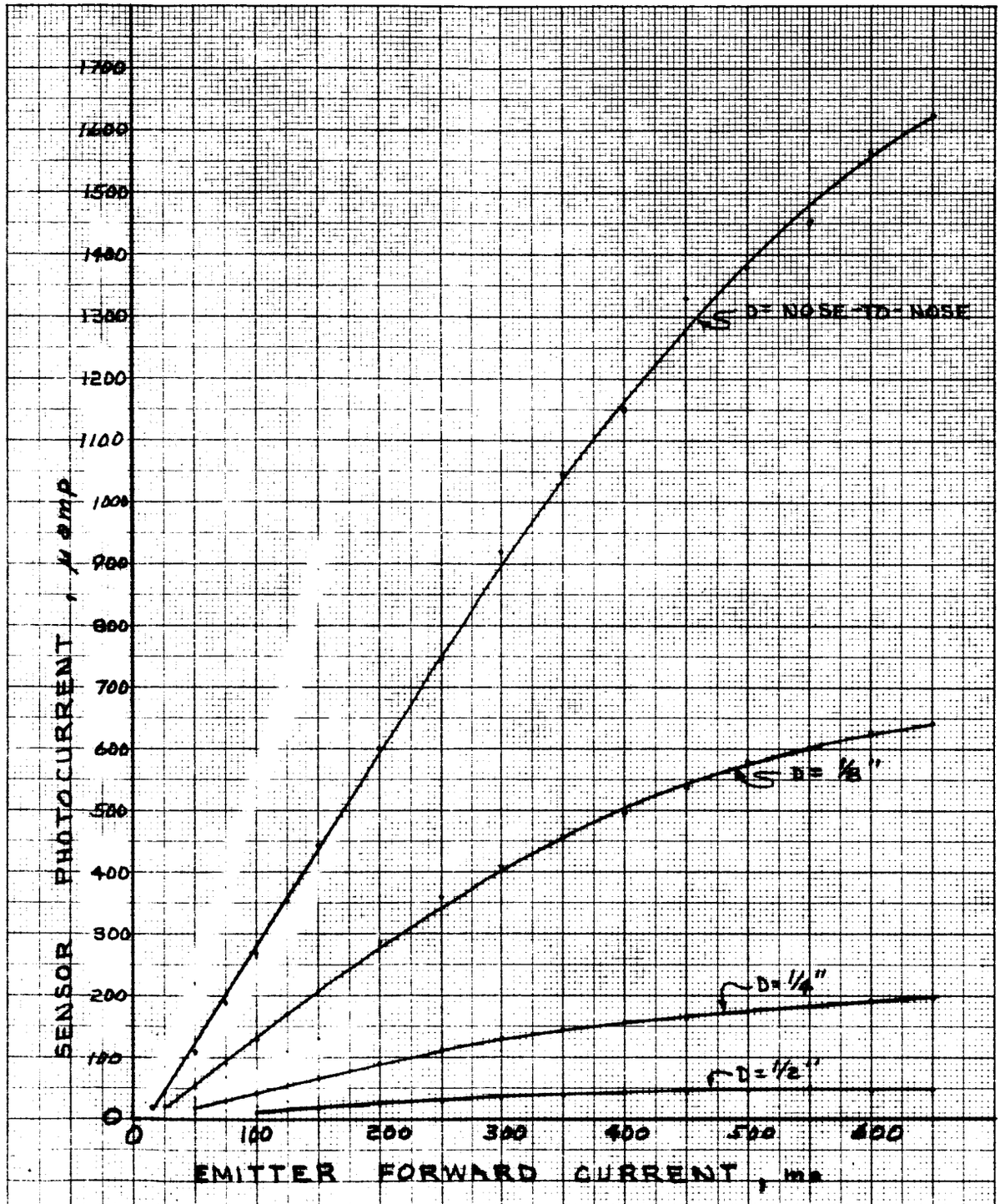


PHOTOCURRENT IN LSX-600 SENSOR WITH 2 K-Ω SERIES RESISTOR AS A FUNCTION OF TIX-L02 EMITTER FORWARD CURRENT AT VARIOUS SEPARATION DISTANCES, D.

| | | | |
|---|---|---|---|
| CALC | RJZ 16 Feb 66 | REVISED | DATE |
| CHECK | | | |
| APPR | | | |
| APPR | | | |

DATA SET 6, SECTION 1

A-55 THE BOEING COMPANY
SEATTLE 24 WASHINGTON

PAGE SH 5

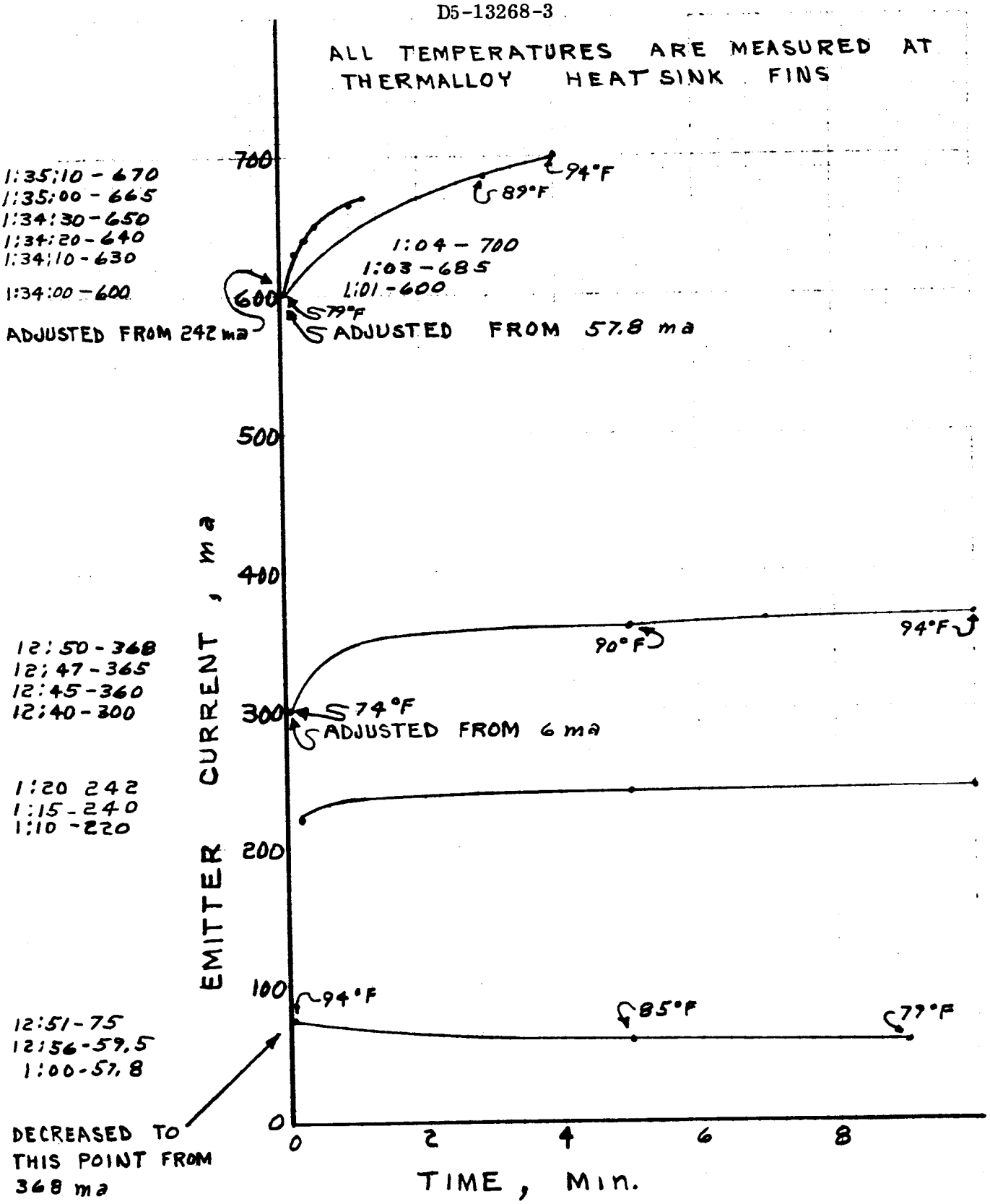


| CALC | | | REVISED | DATE | EMITTER CURRENT TRANSIENT INSTABILITY IMMEDIATELY AFTER LARGE ADJUSTMENT TIX-602 EMITTER | |
|---|---|---|---|---|---|---|
| CHECK | | | | | | |
| APPD. | | | | | | |
| APPD. | | | | | BOEING AIRPLANE COMPANY | PAGE SH 6 |
| | | | | | A-56 | |

REMARKS:

The curves on the previous page plotting emitter current with time indicate a stabilization time is required to reach a steady state point after forward current changes in excess of a few percent.

It was difficult to obtain accurate data during the first few seconds due to the difficulty and time required to make the initial current setting. It can be seen that at least 10 minutes is required for settling when operating in the continuous current mode.

# DATA SHEET

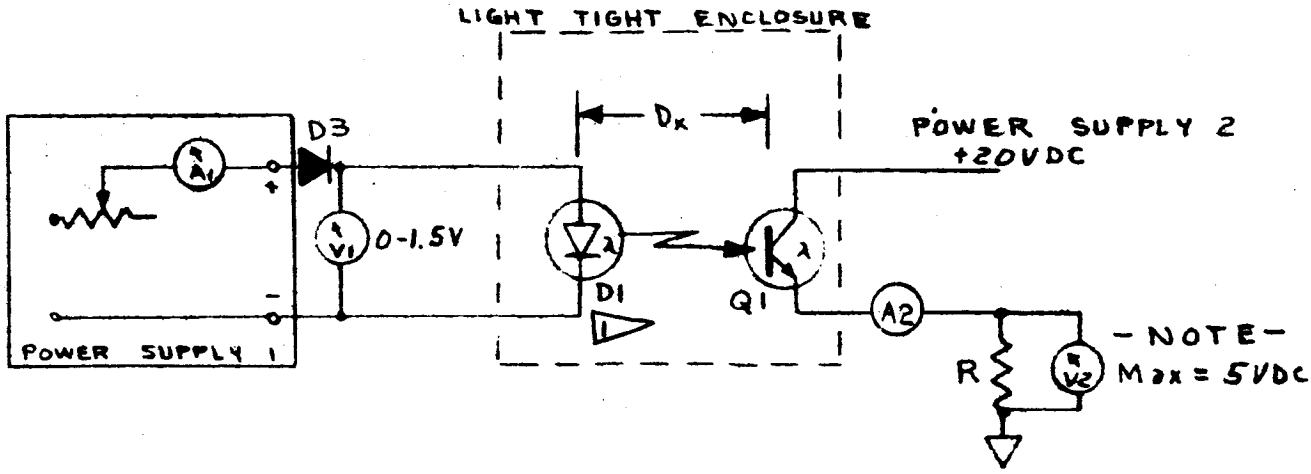


## TEST SETUP

TEST EQUIPMENT LIST

| | | |
|---|---|---|
| CURRENT REGULATED POWER SUPPLY | 1 | - LAMBDA LE-102A |
| POWER SUPPLY | 2 | - TRYGON M36-15A |
| VOLTMETER | 1 | - HATHAWAY R21 |
| VOLTMETER | 2 | - FLUKE 803B |
| AMMETER | 1 | - POLYRANGER 88 |
| AMMETER | 2 | - Keithley |

PARTS LIST

D1 - LED-11 1

Q1 - LSX-600

R - 2 KΩ, .1%, 1/2 W GR DECADE BOX

D3 - IN 538

1 Do not operate without Thermalloy #2218A Heat sink.

SAFETY PRECAUTIONS: Maximum Current through D1 = 550 ma
Maximum Voltage across R = 5 VDC

| | INITIALS | DATE | REV BY INITIALS | DATE | TITLE | MODEL |
|---|---|---|---|---|---|---|
| TECH | | | | | Device Transfer Characteristics - LED-11 Source and LS-600 Sensor | |
| CHECK | RJT | 16Feb66 | | | | |
| APPD | | | | | | |
| APPD | | | | | | |

# DATA SHEET

AMBIENT TEMP. _____

| READING No. | EMITTER [1] VOLTAGE VDC | EMITTER [1] CURRENT MA | SENSOR CURRENT, μamp D1 NOSE TO NOSE | D2 3/16 | D3 = 3/8 | D4 = 1/2" | 1" |
|---|---|---|---|---|---|---|---|
| 1 | 1.08 v | 25.0 ma | | 26.5 ua | 5.8 ua | 3 ua | .55 ua |
| 2 | 1.12 | 50.0 | | 64.2 | 16.5 | 8.3 | 1.5 ua |
| 3 | 1.15 | 75.0 | | 104 | 25.5 | 14 | 2.55 |
| 4 | 1.17 | 100.0 | | 144 | 36.5 | 19.5 | 3.6 a |
| 5 | 1.18 | 125.0 | | 188 | 49 | 26.7 | 4.8 |
| 6 | 1.19 | 150.0 | | 234 | 61 | 30 | 5.8 |
| 7 | 1.20 | 175.0 | | 268 | 71 | 36 | 6.9 |
| 8 | 1.21 | 200.0 | | 290 | 79.5 | 40.5 | 7.9 |
| 9 | 1.22 | 225.0 | | 320 | 89 | 44.5 | 8.5 |
| 10 | 1.23 | 250.0 | | 350 | 96 | 48 | 9.1 |
| 11 | 1.24 | 275.0 | | 375 | 102 | 51 | 9.9 |
| 12 | 1.25 | 300.0 | | 400 | 106 | 54 | 10.5 |
| 13 | 1.26 | 325.0 | | 420 | 110 | 57 | 11.0 |
| 14 | 1.27 | 350.0 | | 440 | 114 | 59 | 11.4 |
| 15 | 1.28 | 375.0 | | 460 | 118 | 61 | 11.6 |
| 16 | 1.28 | 400.0 | | 480 | 120 | 63 | 11.9 |
| 17 | 1.29 | 425.0 | | 495 | 124 | 64 | 12.1 |
| 18 | 1.29 | [1] 450.0 | | 505 | 125 | 66 | 12.4 |
| 19 | 1.30 | 475.0 | | 515 | 127 | 66.5 | 12.5 |
| 20 | 1.30 | 500.0 | | 520 | 128 | 67 | 12.3 |

[1] Maximum Power dissipation (Product of Emitter V·I) must not exceed 0.95 watt at 25°C. Derate 13 mw/°C.

| | INITIALS | DATE | REV BY INITIALS | DATE | TITLE | MODEL |
|---|---|---|---|---|---|---|
| TECH | | | | | | |
| CHECK | | | | | | |
| APPD | | | | | | |
| APPD | | | | | | |

U3 4038 B000 REV 10 64

REV LTR _____

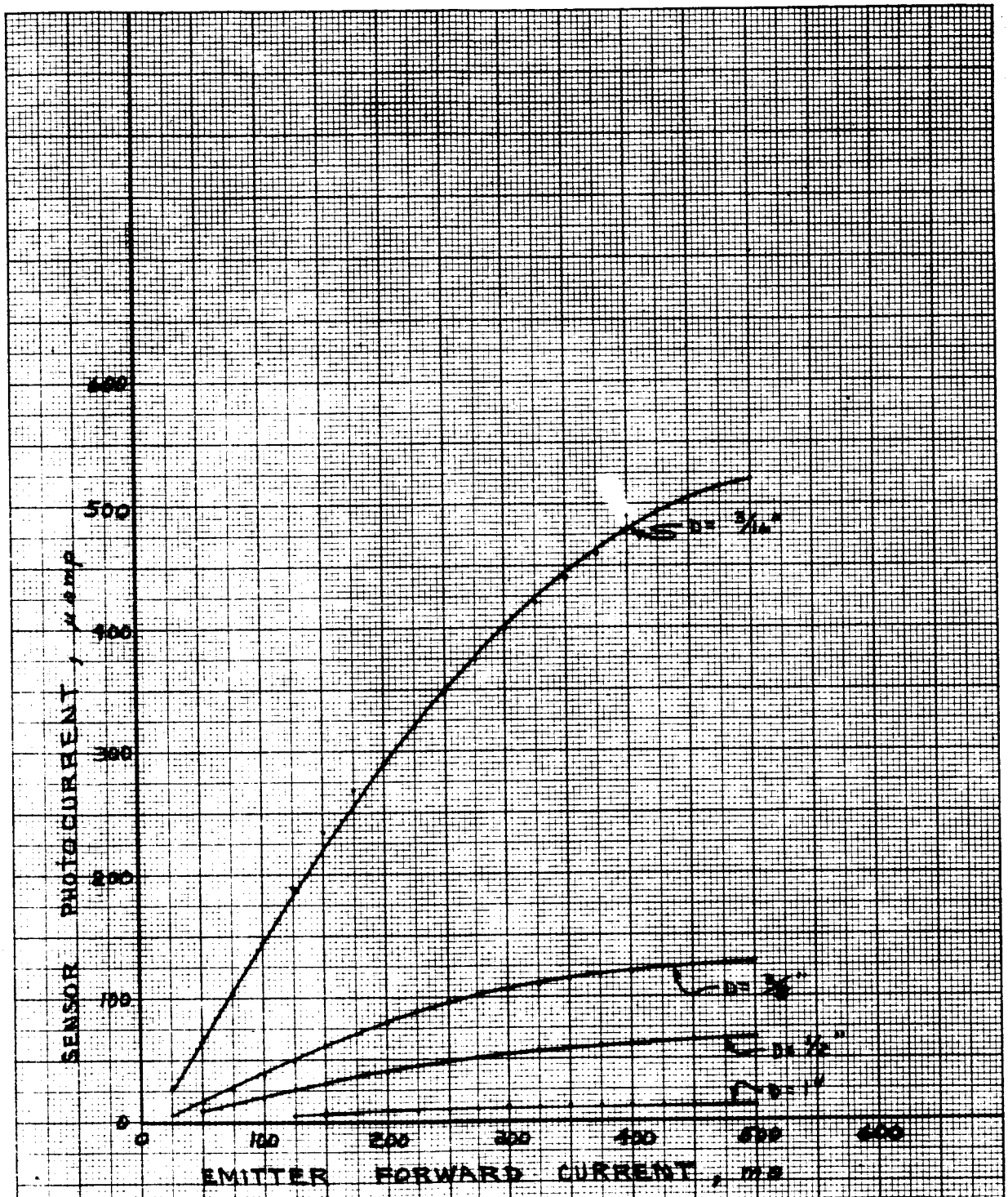


PHOTOCURRENT IN LSX-600 SENSOR WITH 2 KΩ SERIES RESISTOR AS A FUNCTION OF LED-11 EMITTER (WITHOUT LENS CAP) FORWARD CURRENT AT VARIOUS SEPARATION DISTANCES, D, FROM EMITTER JUNCTION.

| | | | | | |
|---|---|---|---|---|---|
| CALC | R L Z | 17 Feb 66 | REVISED | DATE | |
| CHECK | | | | | |
| APPR | | | | | DATA SET 7 SECTION 1 |
| APPR | | | | | A-60 THE BOEING COMPANY SEATTLE 24, WASHINGTON |
| | | | | | PAGE SH 3 |

REMARKS:

The alignment of emitter and sensor for optimum coupling is the least difficult when the emitter is an LED-11 without its lens cap.

The separation distances noted on the data sheet and curve are referenced from the emitter junction.

# DATA SHEET

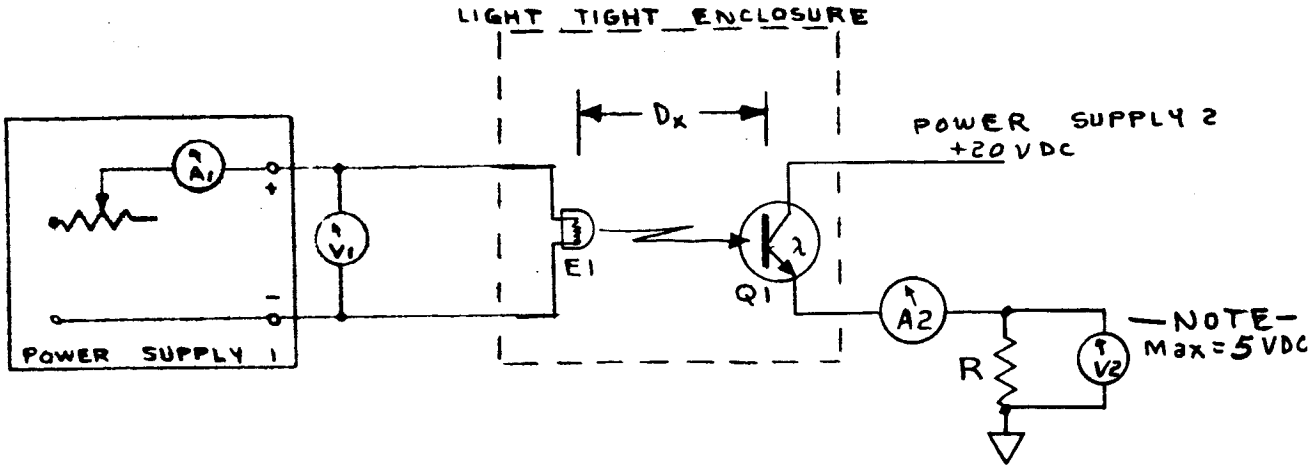


## TEST SET UP

TEST EQUIPMENT LIST

CURRENT REGULATED POWER SUPPLY 1 —LAMBDA LE-102

POWER SUPPLY 2 -TRYGON M36-15A

VOLTMETER 1 -HATHAWAY R21

VOLTMETER 2 -FLUKE 801

AMMETER 1 - POLYRANGER 88

AMMETER 2 - KEITHLEY

PARTS LIST

E1 - L12-3'

- L12-12

Q1 - LSX 600

R - 2 KΩ, Decade Box, GR

30 KΩ (with L12-12)

SAFETY PRECAUTIONS : Maximum Current - L12-3 = 3 ma @ 1.25V

(SEE NOTE ON TEST SETUP) - L12-12 = 12 ma @ 1.25V

| | INITIALS | DATE | REV BY INITIALS | DATE | TITLE | MODEL |
|---|---|---|---|---|---|---|
| TECH | | | | | Device Transfer Characteristics - L12-3 and L12-12 Sources and LS-600 Sensor | |
| CHECK | RJI | 25Feb66 | | | | |
| APPD | | | | | | |
| APPD | | | | | | |

U3 40 18 5000 REV 10 64

REV LTR

BOEING NO D5-13268-3

DATA SET 8, SECTION 1 SH 1 A-62

# DATA SHEET

AMBIENT TEMP. 26.5°C

| READING No. | EMITTER VOLTAGE VDC | EMITTER CURRENT MA | SENSOR Photocurrent μamp [redacted] D1 NOSE TO NOSE | D2 4/8" | D3 = 1/4" | D4 = 1/2" | D1 Repeat | D2 Repeat |
|---|---|---|---|---|---|---|---|---|
| L12-3 1 | 0.70 | 2.3 | 17 ma | 1.57 ma | .54 ma | .23 ma | | |
| 2 | 0.75 | 2.4 | 23.7 ma | 2.45 | .85 | .35 | | |
| 3 | 0.80 | 2.46 | 31.5 | 3.25 | 1.22 | .51 | | |
| 4 | 0.85 | 2.55 | 43 | 4.65 | 1.7 | .69 | | |
| 5 | 0.90 | 2.6 | 57 | 6.15 | 2.35 | .93 | | |
| 6 | 0.95 | 2.67 | 73 | 8.2 | 3.0 | 1.17 | | |
| 7 | 1.00 | 2.75 | 93 | 10.5 | 3.9 | 1.55 | | |
| 8 | 1.05 | 2.82 | 120 | 14.0 | 5.1 | 2.00 | | |
| 9 | 1.10 | 2.9 | 154 | 18.3 | 6.5 | 2.5 | | |
| 10 | 1.15 | 2.96 | 182 | 22.0 | 7.8 | 3.0 | | |
| 11 | 1.18 | 3.00 | 195 | 25.0 | | | | |
| 12 | 1.25 | | | | | | | |
| | | 30 KΩ Load | | | | | | |
| L12-12 1 | 0.70 | 9.6 | 250 ma | 115 ma | 44 ma | 15 ma | 245 | 115 |
| 2 | 0.75 | 9.9 | 360 | 170 | 65 | 24 | 365 | 168 |
| 3 | 0.80 | 10.2 | 520 | 240 | 94 | 32 | 510 | 240 |
| 4 | 0.85 | 10.4 | 645 | 310 | 126 | 42 | 645 | 310 |
| 5 | 0.90 | 10.7 | 655 | 400 | 165 | 55 | 655 | 400 |
| 6 | 0.95 | 11.0 | 655 | 500 | 240 | 71 | 655 | 500 |
| 7 | 1.00 | 11.2 | 655 | 610 | 266 | 89 | | 610 |
| 8 | 1.05 | 11.4 | 655 | 650 | 315 | 109 | | 650 |
| 9 | 1.10 | 11.7 | 655 | 650 | 370 | 130 | | 650 |
| 10 | 1.15 | 11.95 | 655 | 650 | 420 | 155 | | |
| 11 | 1.20 | 12.2 | | | 500 | 188 | | |
| 12 | 1.25 | | | | | | | |

| | INITIALS | DATE | REV BY INITIALS | DATE | TITLE | MODEL |
|---|---|---|---|---|---|---|
| TECH | | | | | | |
| CHECK | RJT | 25 Feb 66 | | | | |
| APPD | | | | | | |
| APPD | | | | | | |

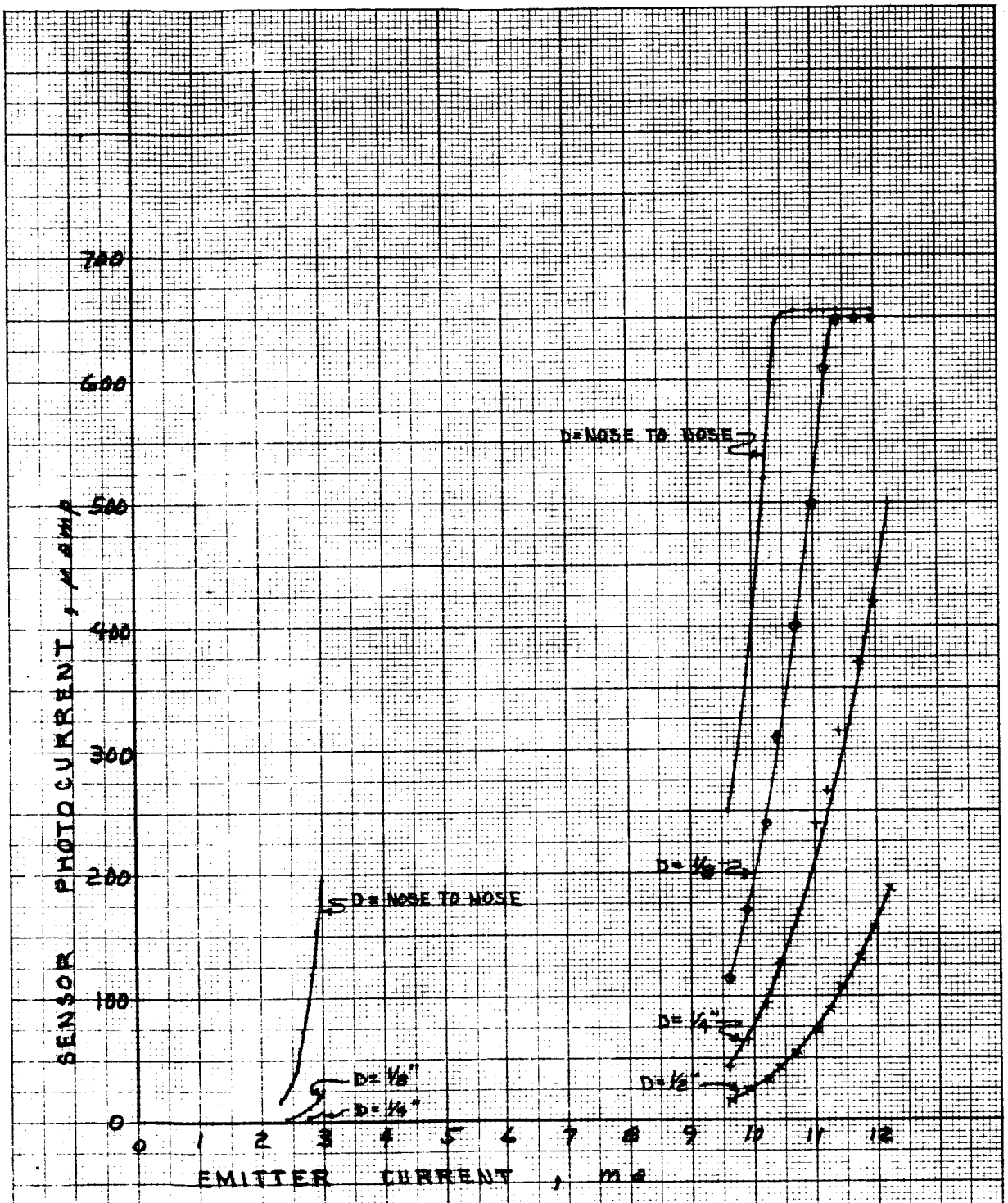


PHOTOCURRENT IN LSX-600 SENSOR AS A FUNCTION OF L12-3 AND L12-12 EMITTER CURRENT AT VARIOUS SEPARATION DISTANCES, D. THE SENSOR SERIES RESISTANCE WAS 2KΩ WITH THE L12-3 AND 30KΩ WITH THE L12-12.

| | | | | |
|---|---|---|---|---|
| CALC | RJJ 15 Mar 66 | REVISED | DATE | |
| CHECK | | | | |
| APPR | | | | |
| APPR | | | | |

DATA SET 8, SECTION 1

A-64 THE BOEING COMPANY
SEATTLE 24, WASHINGTON

PAGE 3

REMARKS:

The Pinlites are difficult to work with due to their size and flexible leads.

Optimum alignment is difficult to obtain.

The sensor became saturated at both D1 and D2 with the L12-12 emitter.

# DATA SHEET

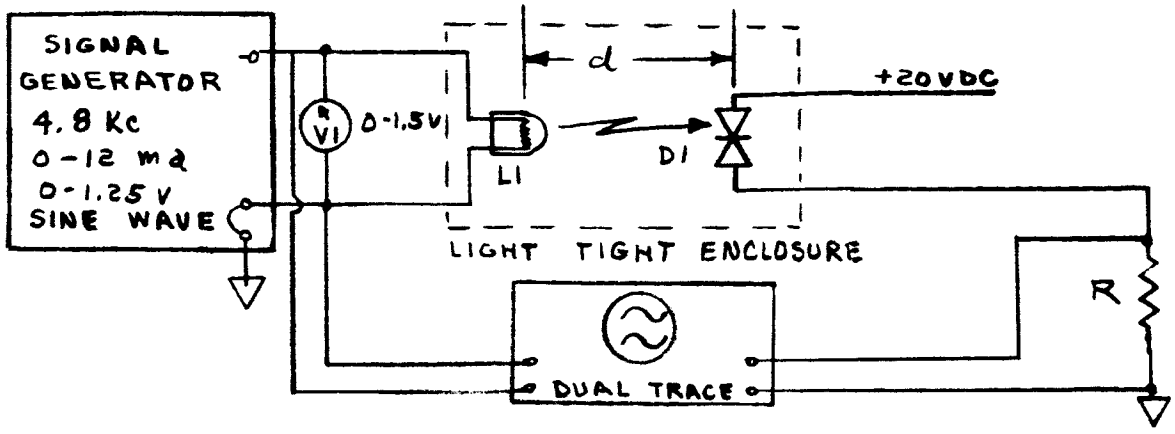


TEST SETUP

## EQUIPMENT LIST

OSCILLOSCOPE - TEKTRONIX 545 WITH "CA" PLUG-IN

SIGNAL GENERATOR - HP 205 AG

VOLTMETER 1 - HP 400 H S/N 15560

POWER SUPPLY - TRYGON M36-15A

## PARTS LIST

L1 - L12-12 PINLITE

D1 - IN 2175

R - 7 KΩ, DECADE BOX, GR

## TEST PROCEDURE AND DATA

MOUNT L1 NOSE TO NOSE WITH D1

CHECK OUTPUT WAVEFORM AMPLITUDE and DELAY FROM INPUT

RECORD THE VOLTAGE WAVEFORMS AT R AND L1 FOR VARIOUS DRIVE FREQUENCIES. SET THE EMITTER VOLTAGE AT APPROXIMATELY 1.2 VRMS.

SAFETY PRECAUTIONS : MAXIMUM VOLTAGE IN L12-12 = 1.25 V RMS

| | INITIALS | DATE | REV BY INITIALS | DATE | TITLE | MODEL |
|---|---|---|---|---|---|---|
| CALC | | | | | Investigation of The "Pinlite" Incandescent Light As A Frequency Output Coupler | |
| CHECK | RJZ | 25Feb66 | | | | |
| APPD. | | | | | | |
| APPD. | | | | | | |

U3 4038 8000 REV 10-64

REV LTR

BOEING NO. D5-13268-3

REMARKS:

With this emitter sensor combination the amplitude of the frequency response dropped off rapidly. In a typical set of measurements made with a 5 KΩ load in series with the sensor the following amplitudes were observed:

| | | | | |
|---|---|---|---|---|
| 1.25 | V P-P | @ | 20 | Hz |
| 160 | mv P-P | @ | 200 | Hz |
| 50 | mv P-P | @ | 700 | Hz |
| 20 | mv P-P | @ | 2000 | Hz |

| | INITIALS | DATE | REV BY INITIALS | DATE | TITLE | MODEL |
|---|---|---|---|---|---|---|
| CALC | | | | | | |
| CHECK | RJF | 25 Feb 66 | | | | |
| APPD. | | | | | | |
| APPD. | | | | | | |

U3 4038 8000 REV. 10-64

REV LTR

Frequency response of the L12-12 emitter and IN2175 SENSOR. The lower trace on each photo set is the emitter drive signal and the upper trace is the sensor photo current (measured across a 7 kΩ series resistor. The sensor photocurrent amplitude decreased rapidly with increasing frequency.

100 Hz →

Horizontal Sweep 2 ms/cm

Vertical Sweep
Upper Trace 1 volt/cm
Lower Trace 2 volt/cm

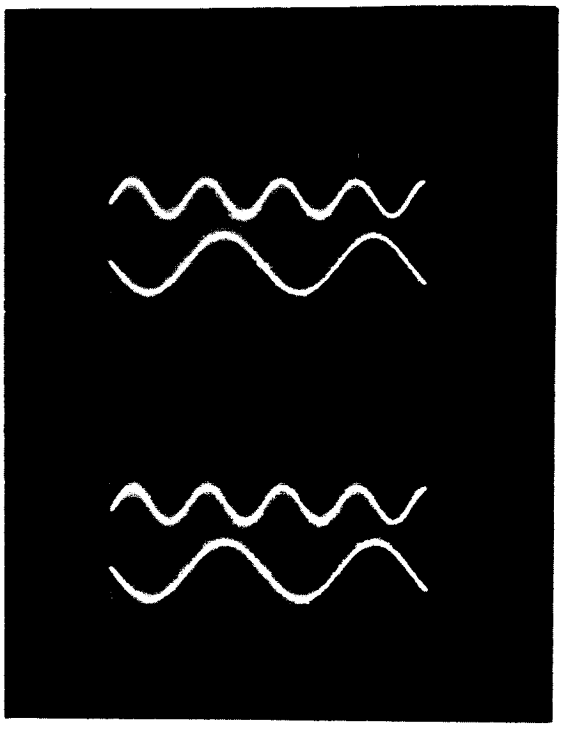

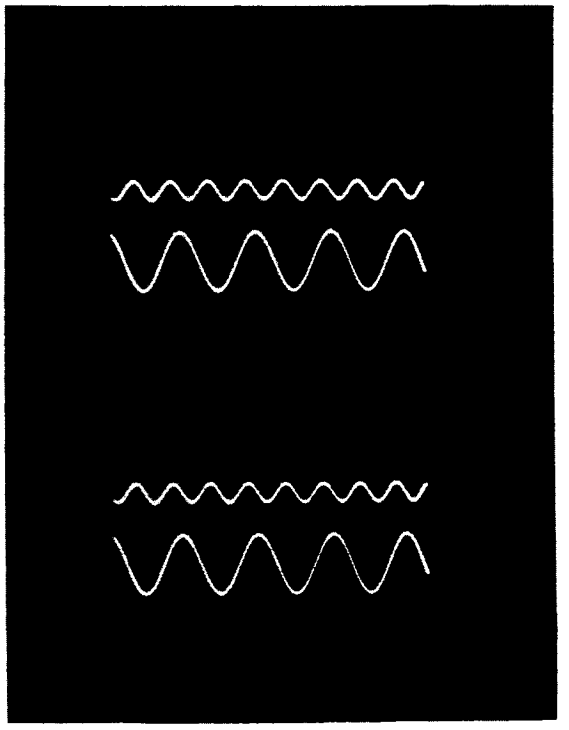

← 200 Hz

Horizontal Sweep 2 ms/cm

Vertical Sweep
Upper Trace 1 volt/cm
Lower Trace 2 volt/cm

Note: Sweep Right to Left.

| | INITIALS | DATE | REV BY INITIALS | DATE | TITLE | MODEL |
|---|---|---|---|---|---|---|
| CALC | | | | | | |
| CHECK | R & I | 25 Feb 66 | | | | |
| APPD. | | | | | | |
| APPD. | | | | | | |

U3 4038 8000 REV. 10-64

800 Hz →

Horizontal Sweep 2 ms/cm

Vertical Sweep (each set)
Upper trace 1 volt/cm

Lower Trace 2 Volt/cm

600 Hz →

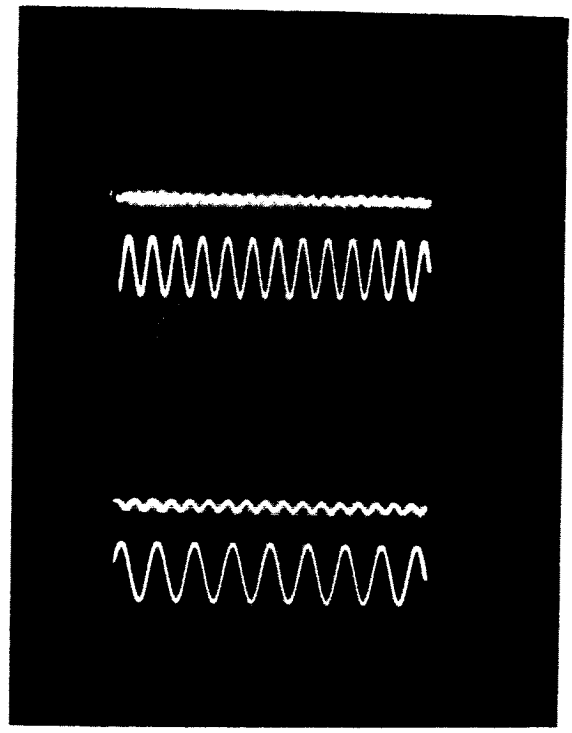

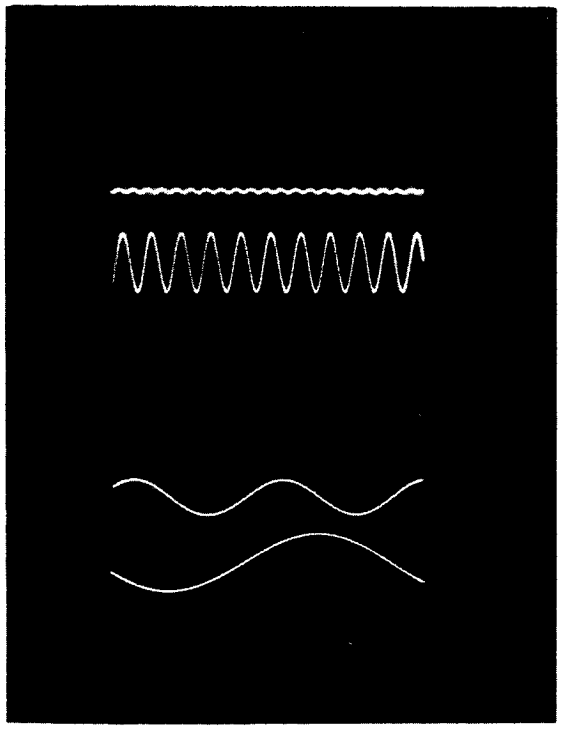

← 1000 Hz

Horizontal Sweep 1 ms/cm

Vertical Sweep (each set)
Upper Trace 1 volt/cm

Lower Trace 2 Volt/cm

← 100 Hz

Note: Sweep Right to Left

| | INITIALS | DATE | REV BY INITIALS | DATE | TITLE | MODEL |
|---|---|---|---|---|---|---|
| CALC | | | | | | |
| CHECK | RJZ | 25 Feb66 | | | | |
| APPD. | | | | | | |
| APPD. | | | | | | |

U3 4038 8000 REV. 10-64

# DATA SHEET

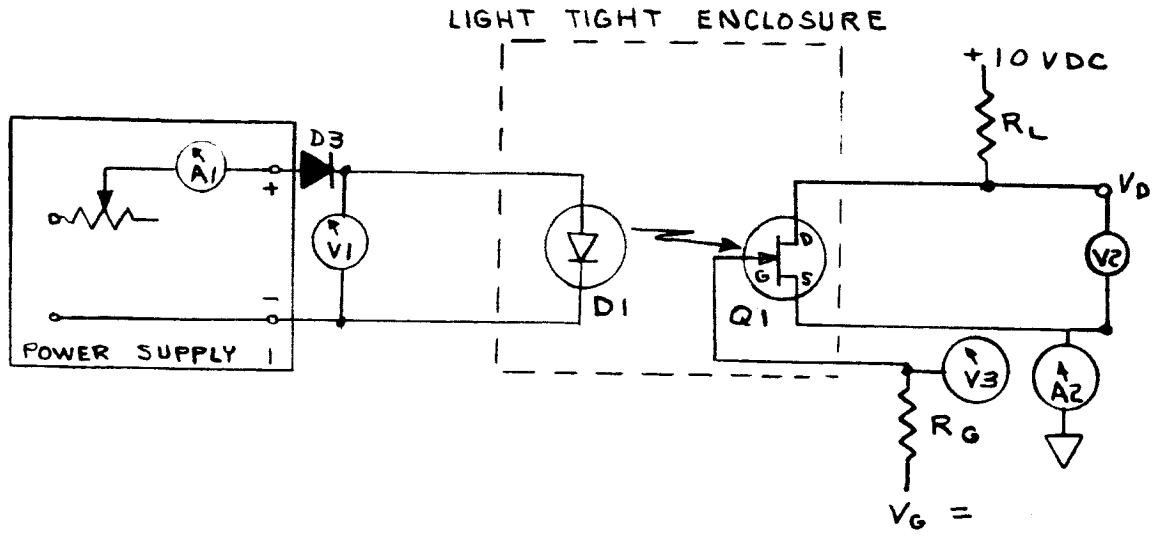


## TEST SETUP

**TEST EQUIPMENT LIST**

POWER SUPPLY 1 – LAMBDA LE102
POWER SUPPLY 2 – TRYGON M36-15A
VOLTMETER 2 – ELECTRO-INSTRUMENTS
VOLTMETER 3 – OSCILLOSCOPE
AMMETER 1 – POLYRANGER 88
AMMETER 2 – KEITHLEY
POWER SUPPLY $V_G$ – TRYGON M36-15A

**PARTS LIST**

D1 – LED-11 WITHOUT LENS CAP
Q1 – FF-600
$R_L$ – 10 KΩ .1% 1 W
$R_G$ – 1 meg (IF Q1 saturates before $I_{D1}$ = 200 ma change $R_G$ to 100KΩ
DECADE BOX – GR
D3 – 1N538

D1 will be mounted nose to nose with Q1 HEAT SINK (SENSOR 3/16" FROM EMITTER JUNCTION)

| | INITIALS | DATE | REV BY INITIALS | DATE | TITLE | MODEL |
|---|---|---|---|---|---|---|
| CALC | | | | | Device Investigation - Photosensitive FET | |
| CHECK | RJZ | 1Mar6 | | | | |
| APPD. | | | | | | |
| APPD. | | | | | | |

U3 4038 8000 REV. 10-64

# DATA SHEET

AMBIENT TEMP. _____

| READING No. | EMITTER VOLTAGE VDC | EMITTER CURRENT MA | SENSOR VOLTAGE, VDC D1 ▷ NOSE TO BASE | | | [redacted] | | | [redacted] | | | D1 NOSE TO NOSE ▷ | | |
|---|---|---|---|---|---|---|---|---|---|---|---|---|---|---|
| | | | $V_{DS}$ | $I_{DS}$ | $-V_{GS}$ | $V_{DS}$ | $I_{DS}$ | $-V_{GS}$ | $V_{DS}$ | $I_{DS}$ | $-V_{GS}$ | $V_{DS}$ | $I_{DS}$ | $-V_{GS}$ |
| 1 | See | 25.0 | 9.85 | 11 μa | Neg 1.88 | 9.85 | 11 μa | Neg 1.86V | 9.91V | 2 μa | Neg 1.9V | | | |
| 2 | Set 3 | 50.0 | 9.78 | 18.3 | 1.85 | 9.49 | 46 | 1.78 | 9.89V | 6 | 1.85 | | | |
| 3 | | 75.0 | 9.67 | 28.0 | 1.82 | 8.56 | 135 | 1.7 | 9.74 | 17.8 | 1.8 | | | |
| 4 | | 100.0 | 9.51 | 43.5 | 1.79 | 6.54 | 320 | 1.6 | 9.50 | 43 | 1.74 | | | |
| 5 | | 125.0 | 9.28 | 67.5 | 1.77 | 4.06 | 570 | 1.55 | 9.00 | 94 | 1.7 | | | |
| 6 | | 150.0 | 9.04 | 92.0 | 1.75 | 1.29 | 840 | 1.5 | 8.12 | 175 | 1.68 | | | |
| 7 | | 175.0 | 8.74 | 120 | 1.70 | .29 | 960 | 1.4 | 7.35 | 258 | 1.62 | | | |
| 8 | | 200.0 | 8.48 | 143 | 1.69 | .23 | 964 | 1.4 | 6.43 | 340 | 1.60 | | | |
| 9 | | 225.0 | 8.17 | 174 | 1.68 | .20 | 966 | 1.3 | 5.46 | 425 | 1.60 | | | |
| 10 | | 250.0 | 7.91 | 202 | 1.66 | .18 | 970 | 1.3 | 4.63 | 510 | 1.55 | | | |
| 11 | | 275.0 | 7.60 | 235 | 1.66 | .17 | 970 | 1.25 | 4.00 | 570 | 1.54 | | | |
| 12 | | 300.0 | 7.37 | 260 | 1.66 | .16 | 970 | 1.20 | 2.74 | 700 | 1.50 | | | |
| 13 | | 350.0 | 7.17 | 280 | 1.66 | .14 | 975 | 1.10 | 0.89 | 890 | 1.50 | | | |
| 14 | | 400.0 | 6.67 | 305 | 1.62 | .14 | 975 | 1.10 | 0.50 | 940 | 1.46 | | | |
| 15 | | 450.0 | 6.59 | 320 | 1.62 | .13 | 975 | 1.10 | 0.40 | 950 | 1.45 | | | |
| 16 | | 500.0 | 6.46 | 330 | 1.62 | | | | 0.40 | 950 | 1.44 | | | |
| 17 | | 550.0 | | | | | | | 0.40 | 950 | 1.44 | | | |
| 18 | | | | | | | | | | | | | | |
| 19 | | | | | | | | | | | | | | |
| 20 | | | | | | | | | | | | | | |

▷1 Gate Bias −2.23 VDC with $R_G$ = 200KΩ
▷2 Gate Bias +3.95 VDC with $R_G$ = 1 MegΩ
▷3 Gate Bias −3.0 VDC with $R_G$ = 500KΩ

| | INITIALS | DATE | REV BY INITIALS | DATE | TITLE | MODEL |
|---|---|---|---|---|---|---|
| TECH | | | | | | |
| CHECK | RJZ | 2 Mar 6 | | | | |
| APPD. | | | | | | |
| APPD. | | | | | | |

U3 4038 8000 REV 10-64

REV LTR _____

# DATA SHEET

| READING NO. FROM SH 2 | EMITTER CURRENT | CHANNEL RESISTANCE $\frac{V_{DS}}{I_{DS}}$ | | |
|---|---|---|---|---|
| | | $R_{DS}$ $K\Omega$ ($R_G = 200K\Omega$) | $R_{DS}$ $K\Omega$ ($R_G = 1\ MEG\Omega$) | $R_{DS}$ $K\Omega$ ($R_G = 500K\Omega$) |
| 1 | 25 ma | 895 $K\Omega$ | 895 $K\Omega$ | 4,950. $K\Omega$ |
| 2 | 50 | 535 $K\Omega$ | 206 | 1,650. $K\Omega$ |
| 3 | 75 | 345 | 63.5 | 546 |
| 4 | 100 | 218 | 20.4 | 220 |
| 5 | 125 | 137 | 7.13 | 95.7 |
| 6 | 150 | 98.2 | 1.535 | 46.4 |
| 7 | 175 | 72.8 | .302 | 28.4 |
| 8 | 200 | 59.3 | .239 | 18.9 |
| 9 | 225 | 47.0 | .207 | 12.85 |
| 10 | 250 | 39.2 | .186 | 9.10 |
| 11 | 275 | 32.4 | .175 | 7.0 |
| 12 | 300 | 28.4 | .165 | 3.92 |
| 13 | 350 | 25.6 | .143 | 1.0 |
| 14 | 400 | 21.8 | .143 | .532 |
| 15 | 450 | 20.6 | .133 | .421 |
| 16 | 500 | 19.6 | | .421 |
| 17 | 550 | | | .421 |

| | INITIALS | DATE | REV BY INITIALS | DATE | TITLE | MODEL |
|---|---|---|---|---|---|---|
| CALC | R J I | 7 Mar 66 | | | CHANNEL RESISTANCE VERSUS EMITTER FORWARD CURRENT COMPUTED FROM SHEET 2 DATA | |
| CHECK | | | | | | |
| APPD. | | | | | | |
| APPD. | | | | | | |

U3 4038 8000 REV. 10-64

REV LTR

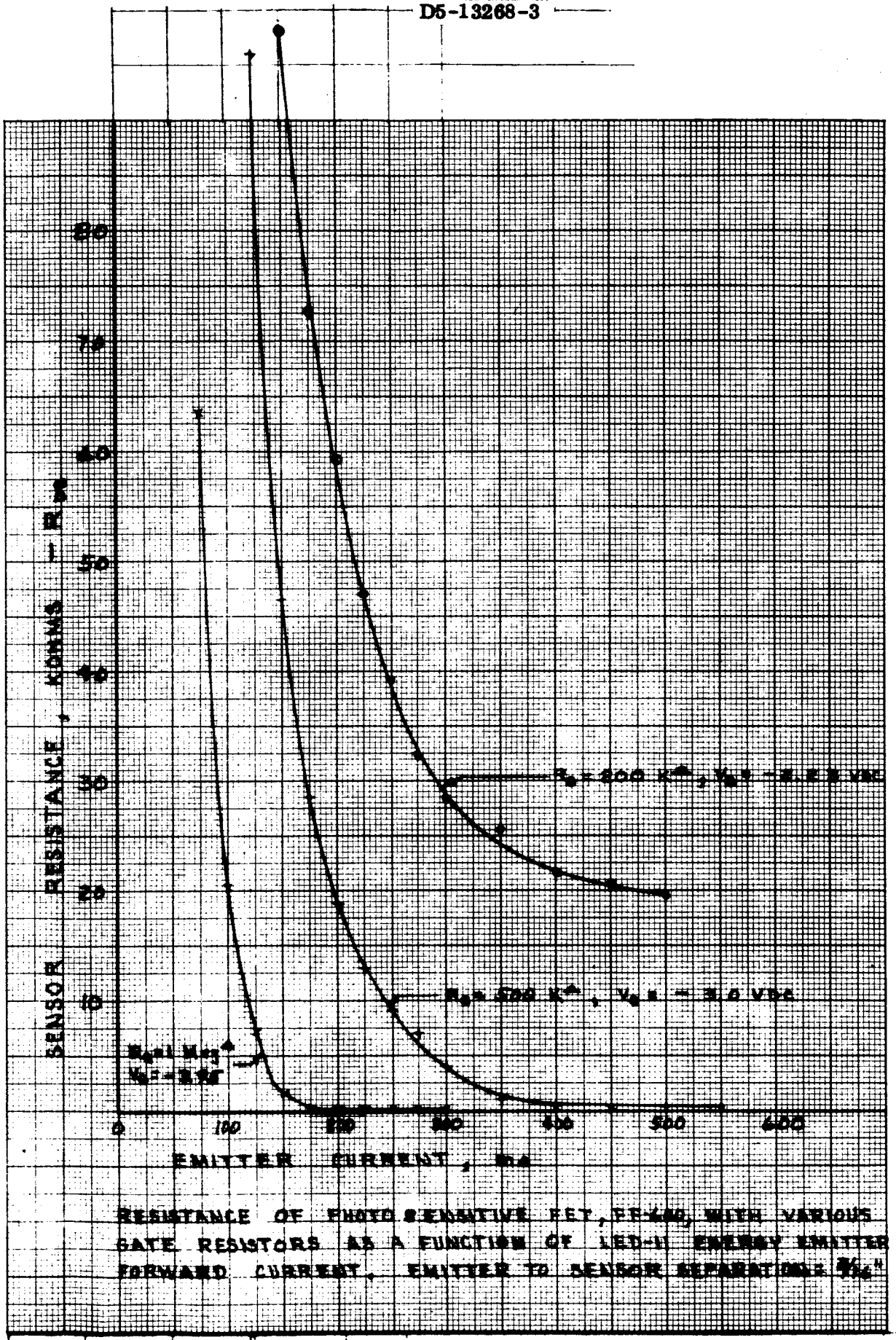


RESISTANCE OF PHOTO SENSITIVE FET, PF-600, WITH VARIOUS GATE RESISTORS AS A FUNCTION OF LED-11 ENERGY EMITTER FORWARD CURRENT. EMITTER TO SENSOR SEPARATION = 3/4"

| CALC | RJZ 7 Mar 66 | REVISED | DATE |
|---|---|---|---|
| CHECK | | | |
| APPR | | | |
| APPR | | | |

DATA SET 10, SECTION 1

A-73 THE BOEING COMPANY
SEATTLE 24, WASHINGTON



NO. 319. MILLIMETERS. 160 BY 220 DIVISIONS.
CODEX BOOK COMPANY, INC. NORWOOD, MASSACHUSETTS.
PRINTED IN U.S.A.

## FOTOFET APPLICATIONS

Crystalonics' silicon FOTOFET is a light sensitive field-effect transistor packaged in a TO-18 case with a glass lens top.

An operational circuit is shown below:

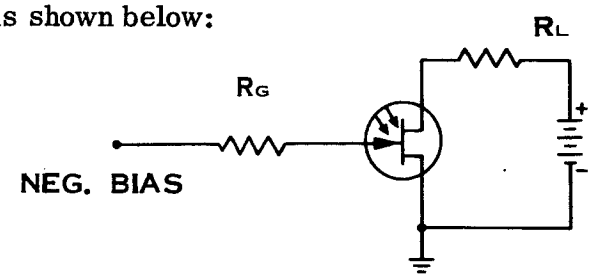


Operation is achieved by focusing incident light on the gate. With a negative bias applied to the gate, the focusing of light on the gate junction will increase the gate leakage. This change in gate leakage, $\lambda I_g$, times the gate resistor, $R_G$, produces a change in gate voltage, $\Delta V_G$. The minimum change of gate leakage, $\lambda I_g$, for the FF600 is 75 nanoamps per foot candle of incident light at 2800° Kelvin color temperature, standard incandescent light source. This change in gate voltage, $V_G$, times transconductance, $G_M$, produces a change in drain current $\lambda I_d$. This $\lambda I_d$ times the load resistor, $R_L$, produces the desired change in output voltage.

Therefore:

$$\lambda I_g \times R_G = \Delta V_G$$
$$\Delta V_G \times G_M = \lambda I_d$$
$$\lambda I_d \times R_L = \Delta V_{DS}$$
$$\Delta V_{DS} = \lambda I_g \times R_G \times G_M \times R_L$$

The load resistor is determined by the $I_{DSS}$ required for operation of the FOTOFET and should be approximately 1K to 10K ohms. The gate resistor is selected by the speed versus sensitivity requirement and may be up to 100 megohms. The larger $R_G$, is the more sensitive the FOTOFET is to incident light and conversely the slower its response time will be. This is due to the R.C. time constant of the gate resistor, $R_G$, and the input capitance.

In the saturated mode of operation such as used for a level detecting system, the FOTOFET is biased off by returning $R_G$ to a negative voltage supply of sufficient magnitude to completely shut off the FOTOFET. The load resistor now can be large in magnitude and therefore produces a large change in output voltage versus input incident light.

Switching transient FOTOFET model:

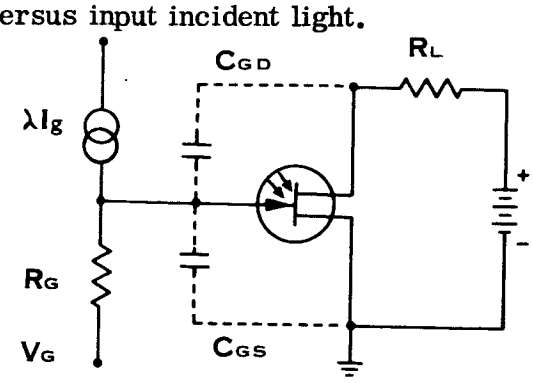

# DATA SHEET

## TEST SETUP

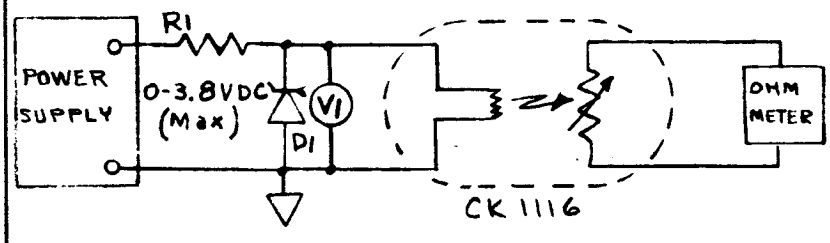


## TEST EQUIPMENT LIST

POWER SUPPLY - Lambda LE102
VOLTMETER V1 - Fluke 803 S/N 1460
OHMMETER - Hathaway R21 S/N BC531312

## PARTS LIST

RAYSISTOR - CK1116
D1 - IN747
R1 - 1K 1/2W 5%

| READING | UNIT 1 V1 VOLTS D.C. | UNIT 1 OUTPUT RESISTANCE Ω | | UNIT 2 V1 | UNIT 2 OUTPUT RESISTANCE |
|---|---|---|---|---|---|
| 1 | 1.0 | 490 K | | | |
| 2 | 1.2 | 59.9 K | | | |
| 3 | 1.4 | 16 K | | | |
| 4 | 1.6 | 6.3 K | | | |
| 5 | 1.8 | 3.39K | *4.0K | 1.8 | 12.5 K |
| | 1.9 | | 3.0K | 1.9 | 8.4 K |
| 6 | 2.0 | 2.09 | 2.26K | 2.0 | 5.6K |
| | 2.1 | | 1.8K | 2.1 | 4.2 K |
| 7 | 2.2 | 1.46 | 1.47K | 2.2 | 3.4 K |
| | 2.3 | | 1.25K | 2.3 | 2.8 K |
| 8 | 2.4 | 970 | 1.05K | 2.4 | 2.33 K |
| 9 | 2.7 | 640 | | 2.7 | 1.63 K |
| 10 | 3.0 | 440 | | 2.8 | 1.33 K |
| | | | | 2.9 | 1.15 K |
| 11 | 3.2 | 365 | | 3.2 | 800 |
| 12 | 3.5 | 290 | | 3.5 | 590 |

*Second reading about 1/2 hour after first.

| | INITIALS | DATE | REV BY INITIALS | DATE | TITLE | MODEL |
|---|---|---|---|---|---|---|
| CALC | | | | | Device Evaluation - "Raysistor" Light Source and Sensor In A Common Enclosure | |
| CHECK | | | | | | |
| APPD. | RST | 2 Feb 66 | | | | |
| APPD. | | | | | | |

U3 4038 8000 REV 10-64

REV LTR

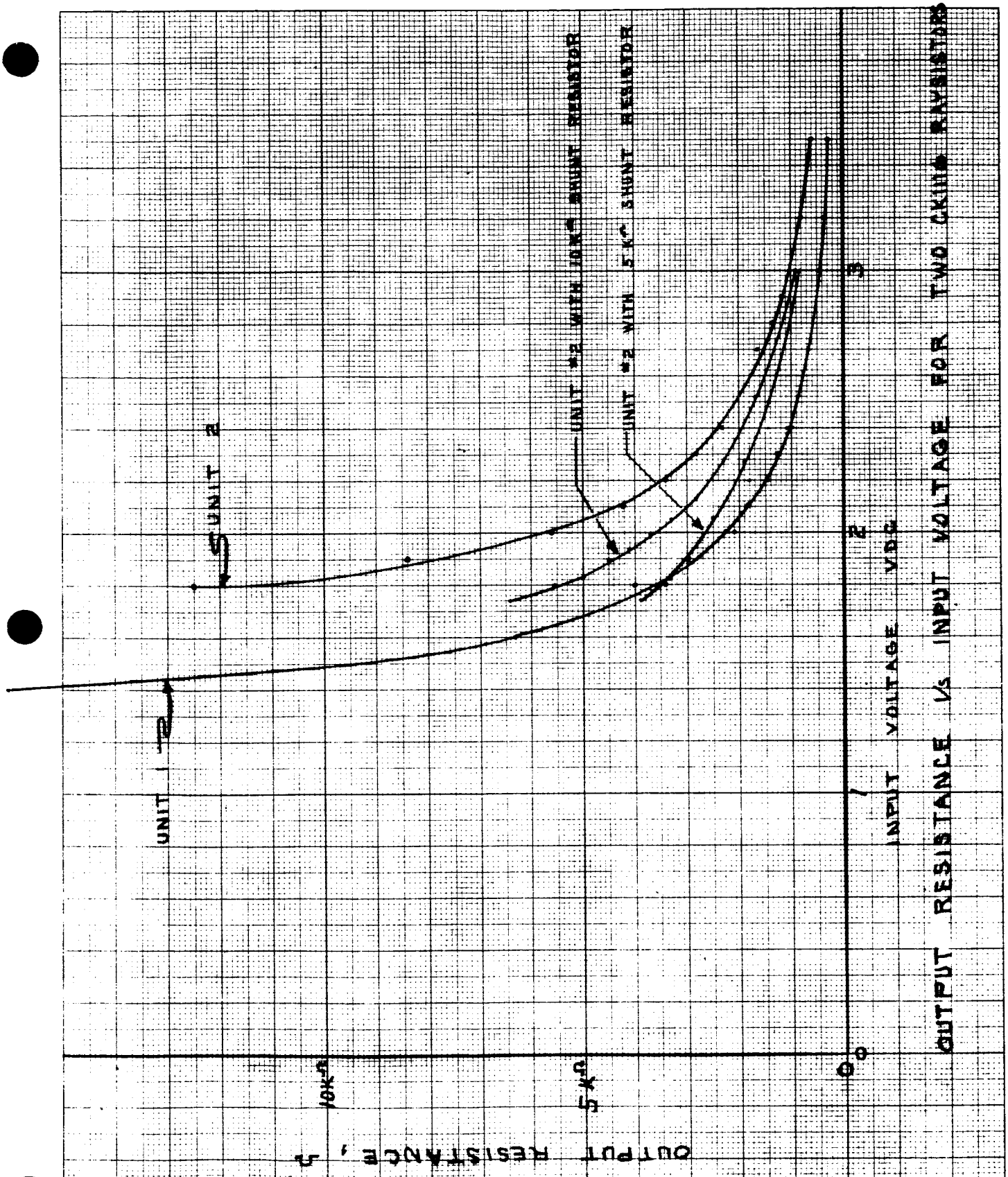


| | | | |
|---|---|---|---|
| CALC. | RJT 2 Feb 66 | REVISED DATE | |
| CHECK | | | |
| APPR | | | |
| APPR | | | |

DATA SET 11, SECTION I

THE BOEING COMPANY
SEATTLE, WASHINGTON

PAGE 5 OF 2

# SECTION 2

# FIBER OPTIC EVALUATION AND APPLICATIONS

# APPENDIX A

## SECTION 2

## FIBER OPTIC AND SOLID LIGHT PIPE INVESTIGATION

Three data sets are included in this section as shown below.

Data Set 1: Fiber Optic Coupling of Emitter and Sensor

Data Set 2: Use of Fiber Optic Bundle to Detect Reflected Light

Data Set 3: Use of Light Pipe (Acrylic Plastic Rod) as a Light Coupling Medium

## FIBER OPTIC COUPLING OF EMITTER/SENSOR

TEST PROCEDURE:

1. Use test setup and devices of section 1, data sets 2 and 6 (T1X-L02 Emitter and LS-600 and IN-2175 Sensor)

2. Separate the emitter and sensor so that the fiber optic bundle B11636 ends can be mounted flush with the emitter and sensor lens.

3. Record data as indicated on sheet 2.

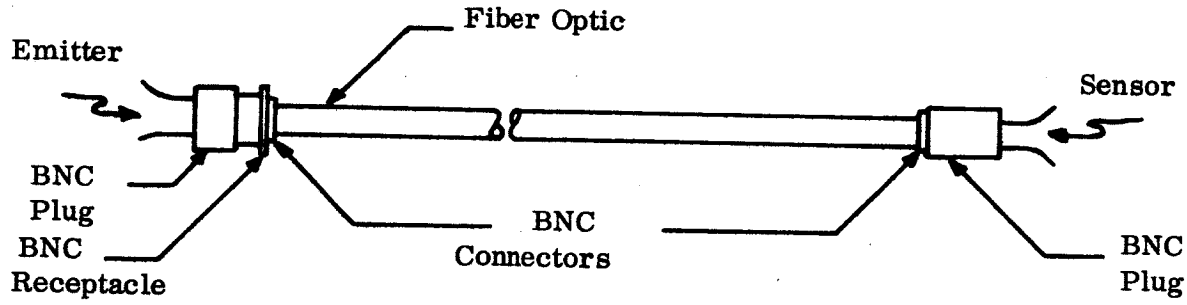

# DATA SHEET

| READING | EMITTER | | SENSOR | | |
|---|---|---|---|---|---|
| | | | PHOTOCURRENT, μamp | | |
| | VOLTAGE VDC | CURRENT ma | SEPARATION NOSE TO NOSE | SEPARATION 3/16" | SEPARATION NOSE TO NOSE |
| | | | TIX-L02 – IN-2175 | TIX-L02 – IN-2175 | TIX-L02 – CS-600 |
| 1 | | 50 | 5 μa | 3.5 μa | 12.4 μa |
| 2 | | 100 | 11.8 | 7.6 | 32 |
| 3 | | 150 | 18.0 | 12.0 | 53 |
| 4 | | 200 | 25.0 | 16.0 | 74 |
| 5 | | 250 | 30.0 | 20.0 | 96 |
| 6 | | 300 | 34.0 | 24.0 | 115 |
| 7 | | 350 | 38.0 | 26.8 | 133 |
| 8 | | 400 | 42.0 | 29.5 | 150 |
| 9 | | 450 | 46.0 | 31.0 | 167 |
| 10 | | 500 | 49.0 | 33.0 | 153 |
| 11 | | 600 | 56.0 | 37.5 | 210 |

NOTE: THE EMITTER WAS FLUSH WITH THE FIBER END WHILE THE SEPARATION AT THE SENSOR END IS AS NOTED.

| | INITIALS | DATE | REV BY INITIALS | DATE | TITLE | MODEL |
|---|---|---|---|---|---|---|
| CALC | | | | | | |
| CHECK | R J F | 1 Mar 6 | | | | |
| APPD. | | | | | | |
| APPD. | | | | | | |

U3 4038 8000 REV. 10-64

REV LTR

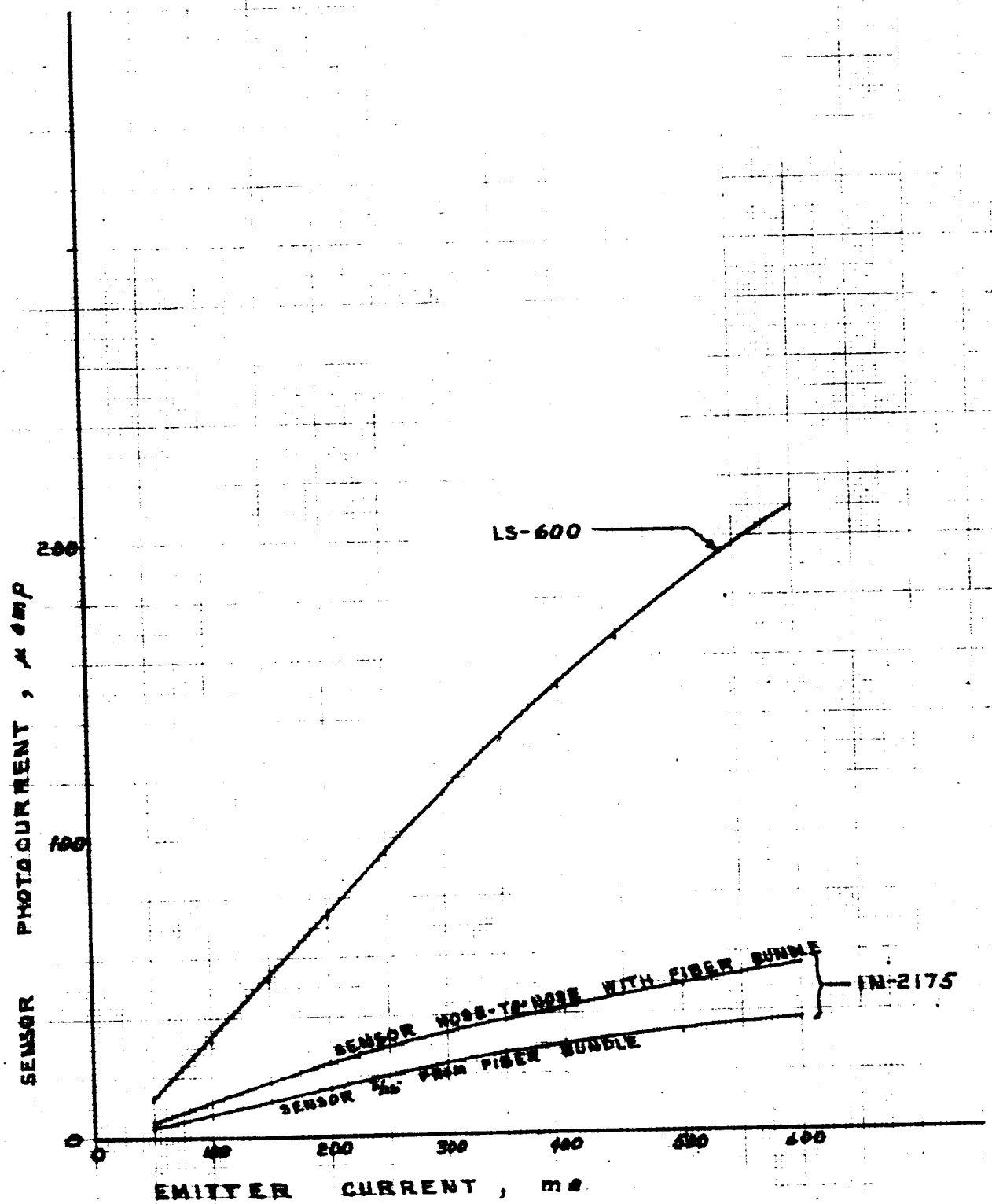


Photocurrent in the LS-600 and IN-2175 sensors as a function of TIX-L02 emitter forward current when the emitter radiant energy is coupled to the sensors with a three-foot fiber optic bundle.

| CALC | RJI | 17 Mar 66 | REVISED | DATE | DATA SET 1, SECTION 2 | |
|---|---|---|---|---|---|---|
| CHECK | | | | | | |
| APR | | | | | | |
| APR | | | | | THE BOEING COMPANY | PAGE A-81 |

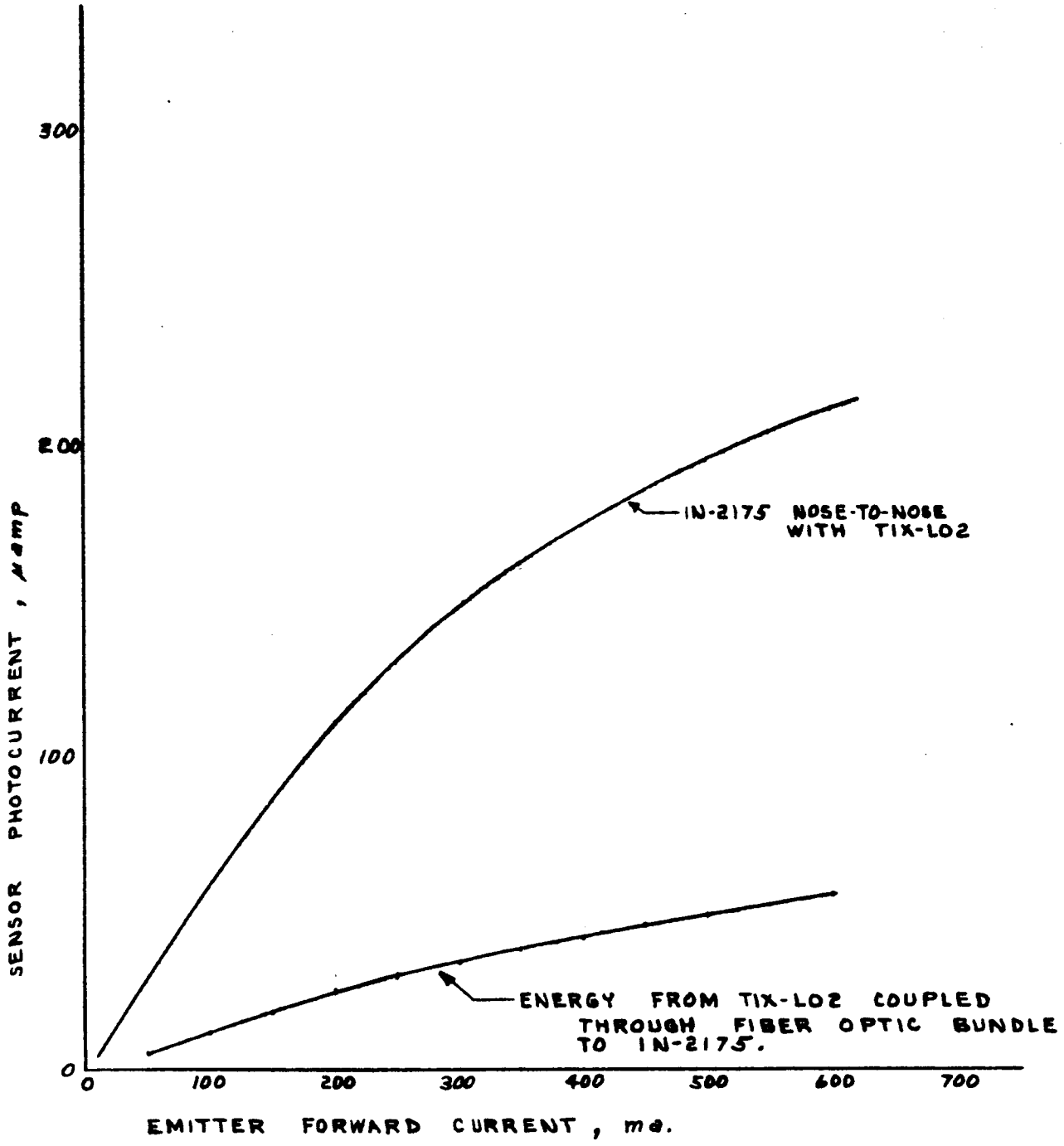


Photosensor response of the IN-2175 as a function of TIX-L02 emitter forward current with nose-to-nose space coupling and with energy coupling through a three-foot fiber optic bundle.

The nose-to-nose space coupling curve was taken from data set 2, section 1.

| CALC | RJZ | 21 MAR | REVISED | DATE | DATA SET 1 SECTION 2 | |
|---|---|---|---|---|---|---|
| CHECK | | | | | | |
| APR | | | | | | |
| APR | | | | | THE BOEING COMPANY | PAGE A-82 |

US 4013 8000

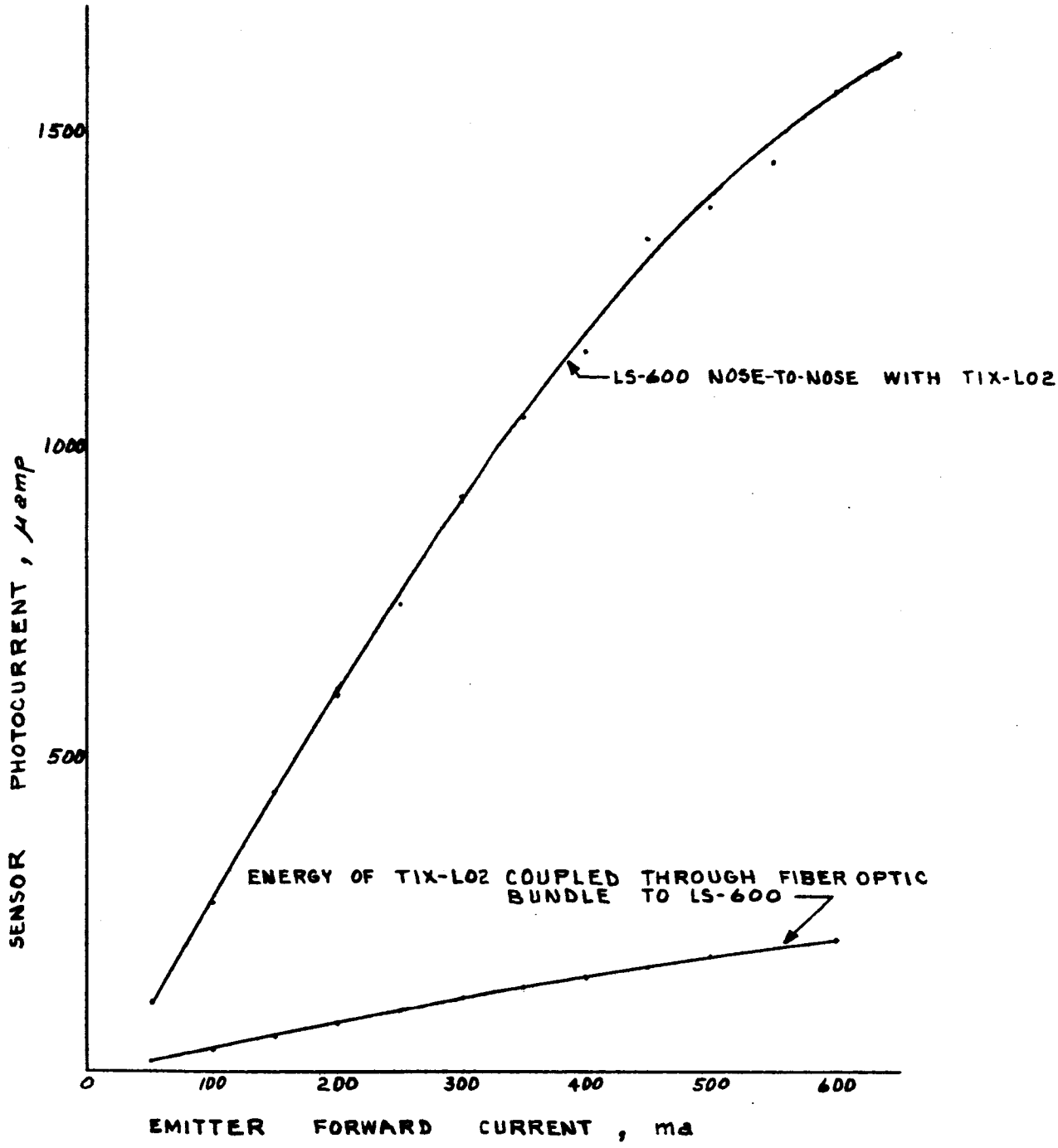


Photosensor response of the LS-600 as a function of TIX-L02 emitter forward current with nose-to-nose space coupling and with energy coupling through a three-foot fiber optic bundle.

The nose-to-nose space coupling curve was taken from set 6, section 1.

REMARKS:

The preceding curves show the amount of attenuation experienced when the energy of a T1X-L02 is transmitted through a three-foot fiber optic bundle. The attenuation at three emitter drive current levels is as follows (quoted as a percent of the nose to nose coupling): 11.9 percent @100mA., 12.3 percent @mA., 13 percent @400mA.

This was much lower than expected. This large attenuation may be due to the lack of electrical alignment when using the fiber bundle. The emitter and sensor were centered mechanically in the BNC connectors, no electrical alignment was possible.

## USE OF FIBER OPTICS TO DETECT REFLECTED LIGHT

TEST PROCEDURE:

1. Use the devices of Section 1, data set 4 (L12-12 emitter and IN2175 sensor) with the emitter and sensor mounted in BNC connectors such that the fiber optic bundle, E11636, can be mounted with the split ends of the bundle flush with the lenses of the emitter and sensor.

2. With the emitter current at approximately 11.8 mA determine the sensor output for various reflective materials at a distance of approximately 1/4" from the end of the bundle.

3. The emitter drive circuitry is that of the optical tachometer of Section 3.

4. Note all alignment difficulties and perculiarities of reflecting the emitter energy.

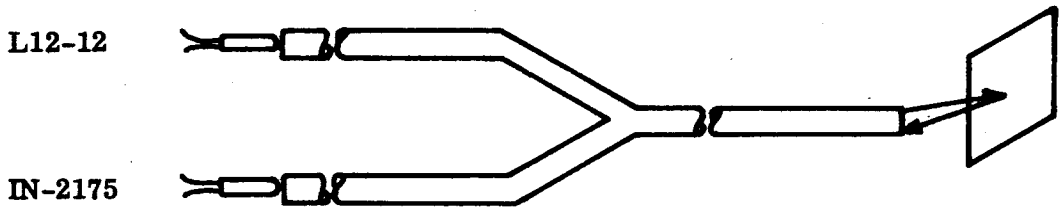

TEST RESULTS:

No quantitative data was recorded due to alignment difficulties. A relative measure of the reflecting ability was observed and is noted below:

| Sample Surface | Result | Remarks |
|---|---|---|
| Aluminum Foil | Very good | Thin sample used wrinkes easily and caused alignment problems |
| Brass Shim Stock .004" | Excellent | No wrinkles, remains shiny easiest to align |
| Copper | Good | Must be kept polished |
| White Paint | Very Poor | |
| Polished Aluminum | Very Poor | |

The aluminum foil, brass and copper all gave about the same output signal from the sensor. There was much less signal from the polished aluminum and an almost unmeasurable output with the white enamel. The IN2175 sensor also detects the fluorescent light flicker of room lighting.

# DATA SHEET

TEST SETUP

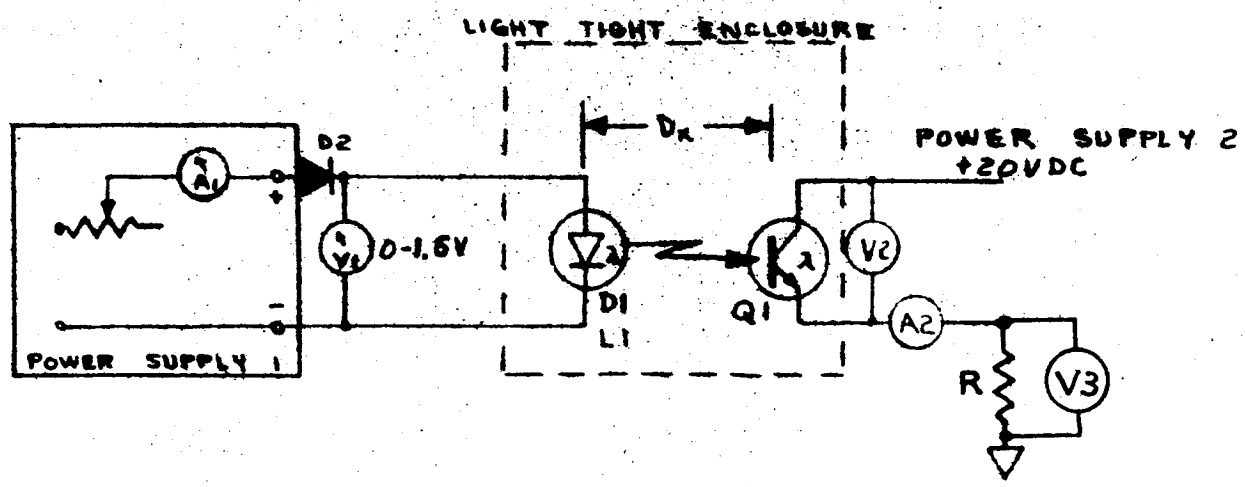


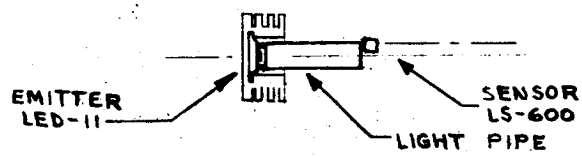


TEST SET UP

| TEST EQUIPMENT LIST | PARTS LIST |
|---|---|
| POWER SUPPLY 1 - LAMBDA LE-102F | D1 - TIX-L01, LED-11 |
| POWER SUPPLY 2 - TRYGON M36-15A | L1 - L12-12 |
| VOLTMETER 1 - HATHAWAY R21 | Q1 - LS-600 |
| VOLTMETER 3 - FLUKE 803B | R - 2 KΩ, DECADE BOX-GR |
| AMMETER 1 - POLYRANGER 88 | D2 - 1N538 |
| AMMETER 2 - | LIGHT PIPE - ACRYLIC PLASTIC |

Using the above test set-up, separate the emitter and sensor such that the lucite light pipe fits in between but tightly against the lenses. Record the sensor current for several emitter currents.

SAFETY PRECAUTIONS: Maximum Current through D1 = LED-11 600 ma, TIX-L01 50 ma
Maximum Voltage across R = 5 VDC

| | INITIALS | DATE | REV BY INITIALS | DATE | TITLE | MODEL |
|---|---|---|---|---|---|---|
| TECH | | | | | Investigation Of The Enhancement Of Light Coupling With Acrylic Light Pipes | |
| CHECK | RJI | 23 Feb 66 | | | | |
| APPD. | | | | | | |
| APPD. | | | | | | |

U3 4038 8000 REV. 10-64

REV LTR

BOEING NO D5-13268-3

# DATA SHEET

AMBIENT TEMP. 25.5 °C

| READING No. | EMITTER VOLTAGE VDC | EMITTER CURRENT MA | SENSOR PHOTO CURRENT, μamp [redacted] $D_1$ NOSE TO NOSE | $D_2$ 1/8" | $D_3$ = 1/4" | $D_4$ = 1/2" |
|---|---|---|---|---|---|---|
| 1 | | | | | | |
| 2 | | | | | | |
| 3 | | | | | | |
| 4 | | | | | | |
| 5 | | | | | | |
| 6 | | | | | | |
| 7 | | | | | | |
| 8 | | | | | | |
| 9 | | | | | | |
| 10 | | | | | | |
| 11 | 0.7 | 9.6 | | | 93 | 43 na |
| 12 | 0.8 | 10.2 | | | 192 | 95 |
| 13 | 0.9 | 10.7 | | | 330 | 170 |
| 14 | 1.0 | 11.2 | | | 510 | 275 |
| 15 (L12 -12) | 1.05 | 11.4 | | | 600 | 320 |
| 16 | 1.10 | 11.7 | | | 650 | 380 |
| 17 | 1.15 | 11.95 | | | 650 | 400 |
| 18 | 1.20 | 12.20 | | | | 510 |
| 19 | 1.25 | | | | | |
| 20 | | | | | | |

| | INITIALS | DATE | REV BY INITIALS | DATE | TITLE | MODEL |
|---|---|---|---|---|---|---|
| TECH | | | | | | |
| CHECK | | | | | | |
| APPD. | | | | | | |
| APPD. | | | | | | |

U3 4038 8000 REV 10-64

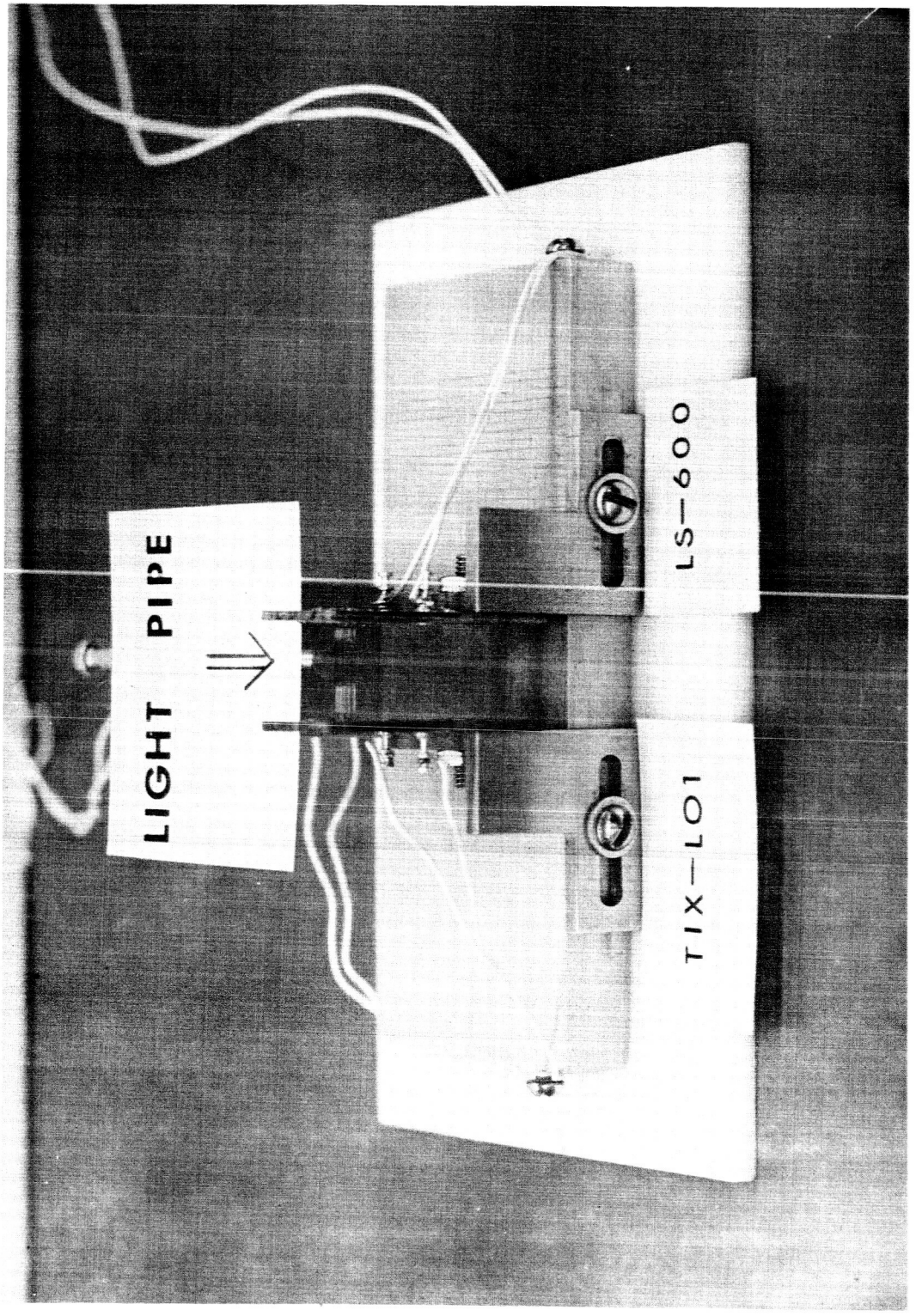


TEST SET-UP OF THE T1X-L01 DIODE LIGHT SOURCE AND LS-600 SENSOR WITH AN ACRYLIC PLASTIC LIGHT PIPE USED TO COUPLE THE ENERGY FROM SOURCE TO SENSOR. THE LIGHT PIPE IS ONE HALF INCH LONG AND ONE-EIGHTH INCH DIAMETER

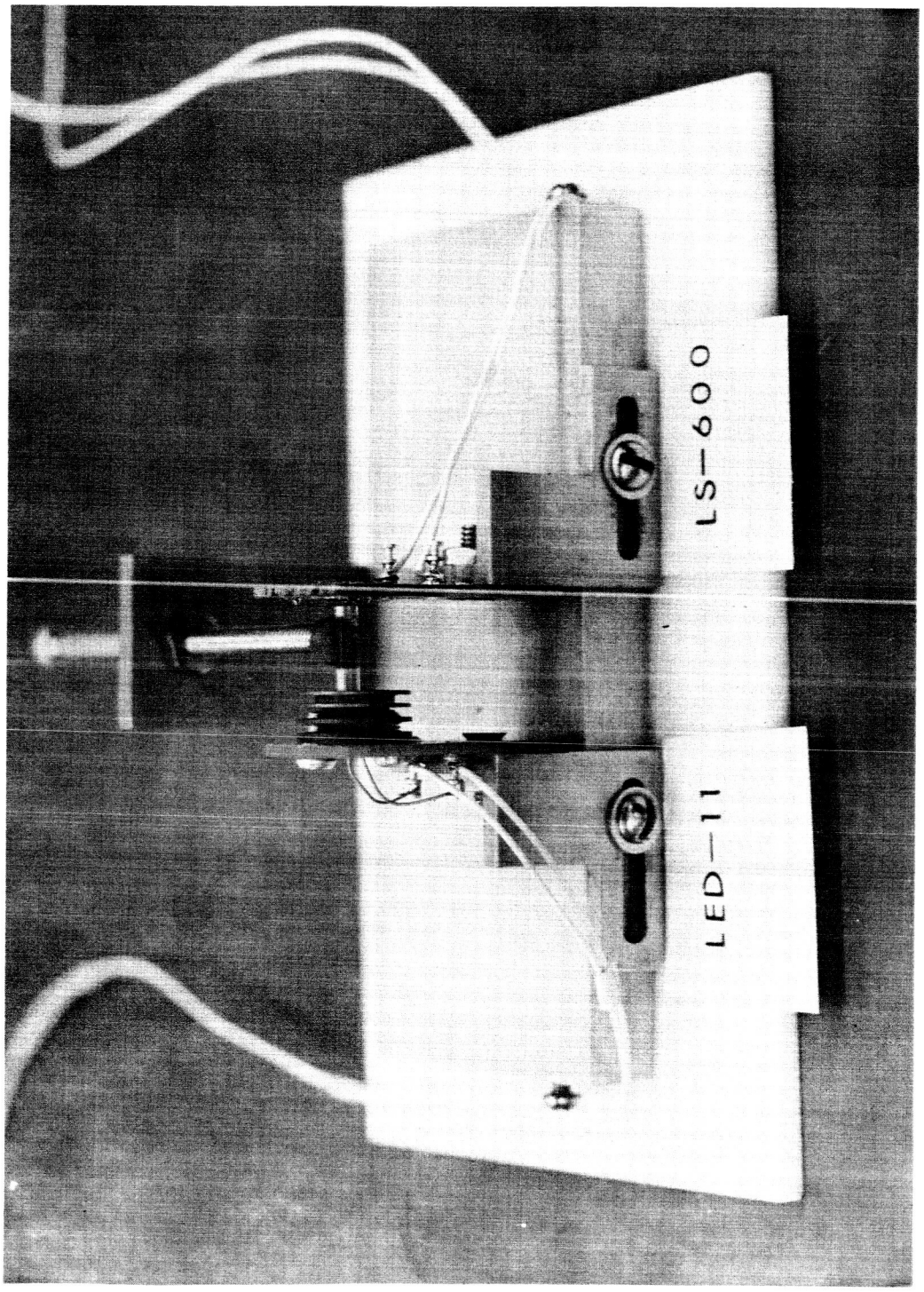


TEST SET-UP OF THE LED-11 SOURCE (WITHOUT LENS) AND THE LS-600 SENSOR. THE ENERGY IS COUPLED VIA THE ACRYLIC PLASTIC LIGHT PIPE. THE LIGHT PIPE IS ONE-HALF INCH LONG.

# DATA SHEET

AMBIENT TEMP. _____

| READING No. | | EMITTER VOLTAGE VDC | EMITTER CURRENT MA | SENSOR VOLTAGE, VDC D1 NOSE TO NOSE | D2 1/8" | D3 = 1/4" | D4 = 1/2" 1ST RUN | PHOTO CURRENT @ D = 1/2" μ amp 2ND RUN | @ D = 1/2" μ amp 1ST RUN |
|---|---|---|---|---|---|---|---|---|---|
| 1 | | | 50 | | | | 238 mv | 122 ▷ | 119 |
| 2 | | | 100 | | | | 593 mv | 333 | 296 |
| 3 | | | 150 | | | | 945 mv | 515 | 472 |
| 4 | | | 200 | | | | 1.27 | 695 | 635 |
| 5 | | | 250 | | | | 1.6 | 872 | 800 |
| 6 | | | 300 | | | | 1.81 | 1,000 | 905 |
| 7 | LED-11 | | 350 | | | | 2.00 | 1,055 | 1000 |
| 8 | | | 400 | | | | 2.13 | 1,120 | 1070 |
| 9 | | | 450 | | | | 2.26 | 1,205 | 1130 |
| 10 | | | 500 | | | | 2.37 | 1,235 | 1185 |
| 11 | | | 550 | | | | 2.36 * | | 1180 |
| 12 | | | 5 | | | | 1.5 mv | | .75 |
| 13 | | | 10 | | | | 5.8 mv | | 2.9 |
| 14 | | | 15 | | | | 12.3 mv | | 6.15 |
| 15 | | | 20 | | | | 20. mv | | 10.0 |
| 16 | | | 25 | | | | 29.2 mv | | 14.6 |
| 17 | TIX-L01 | | 30 | | | | 40.4 mv | | 20.2 |
| 18 | | | 35 | | | | 52. mv | | 26.0 |
| 19 | | | 40 | | | | 64.6 mv | | 32.3 |
| 20 | | | 46 | | | | 78.5 mv | | 39.2 |
| 21 | | | 49.5 | | | | 89.5 mv | | 44.7 |

▷ THIS RUN MADE AFTER REALIGNMENT

* 2.30 v @ 600 ma after Heating (1150 μ amp)

| | INITIALS | DATE | REV BY INITIALS | DATE | TITLE | MODEL |
|---|---|---|---|---|---|---|
| TECH | | | | | | |
| CHECK | | | | | | |
| APPD. | | | | | | |
| APPD | | | | | | |

U3 4038 8000 REV 10-64

REV LTR _____

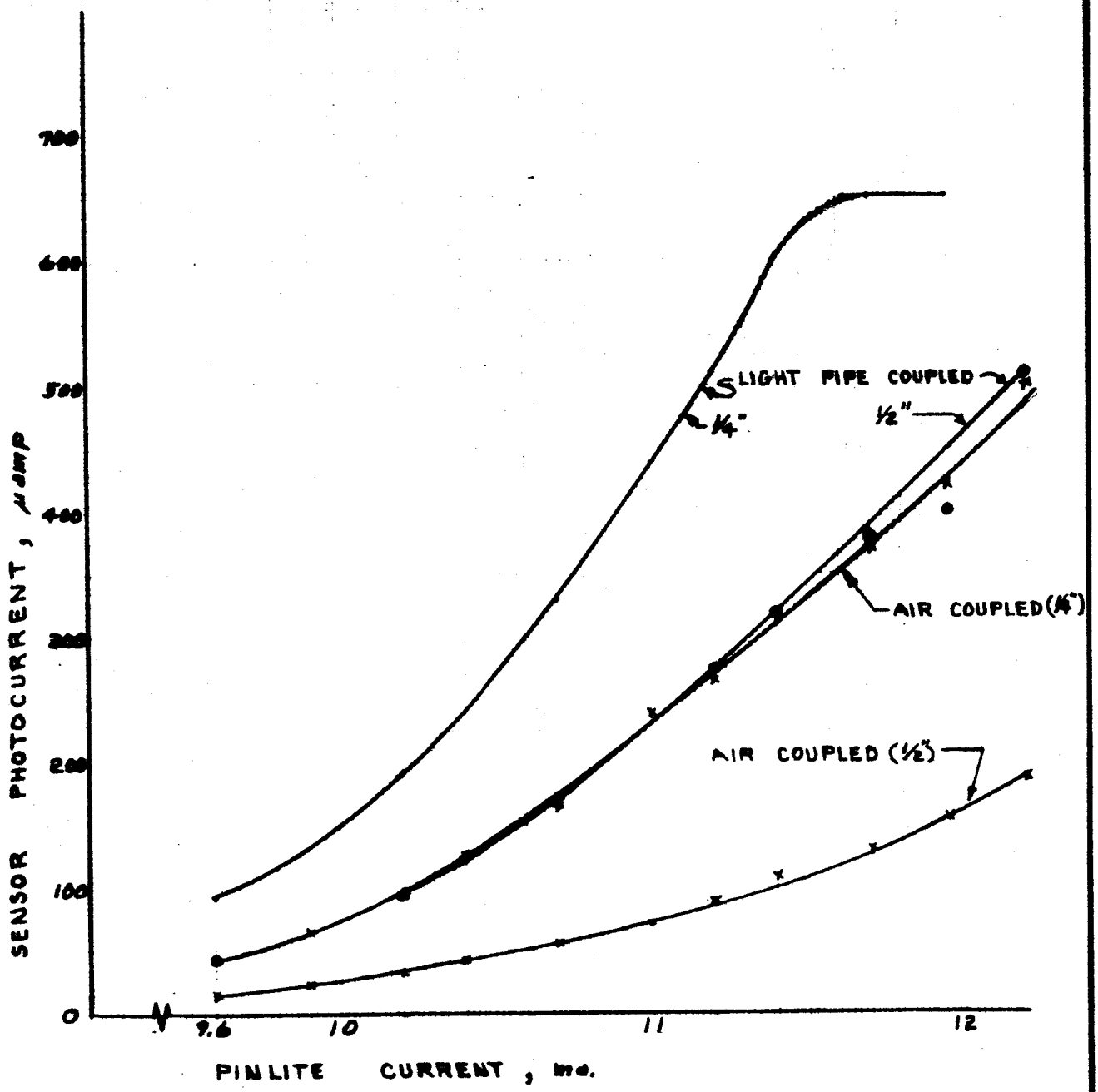


Photocurrent in LS-600 sensor as a function of LI2-12 pinlite forward current with and without light pipe energy coupling. The source/sensor separation was both 1/4" and 1/2". The light pipes were made of acrylic plastic; the 1/2" pipe was 1/8" diameter and the 1/4" pipe was 1/16" diameter.

The curves for sensor response without light pipes was plotted from data in set 8, section 1.

| CALC | RJZ | 18 Mar 6 | REVISED | DATE | DATA SET 3, SECTION 2 | |
|---|---|---|---|---|---|---|
| CHECK | | | | | | |
| APR | | | | | | |
| APR | | | | | THE BOEING COMPANY | PAGE A-92 |

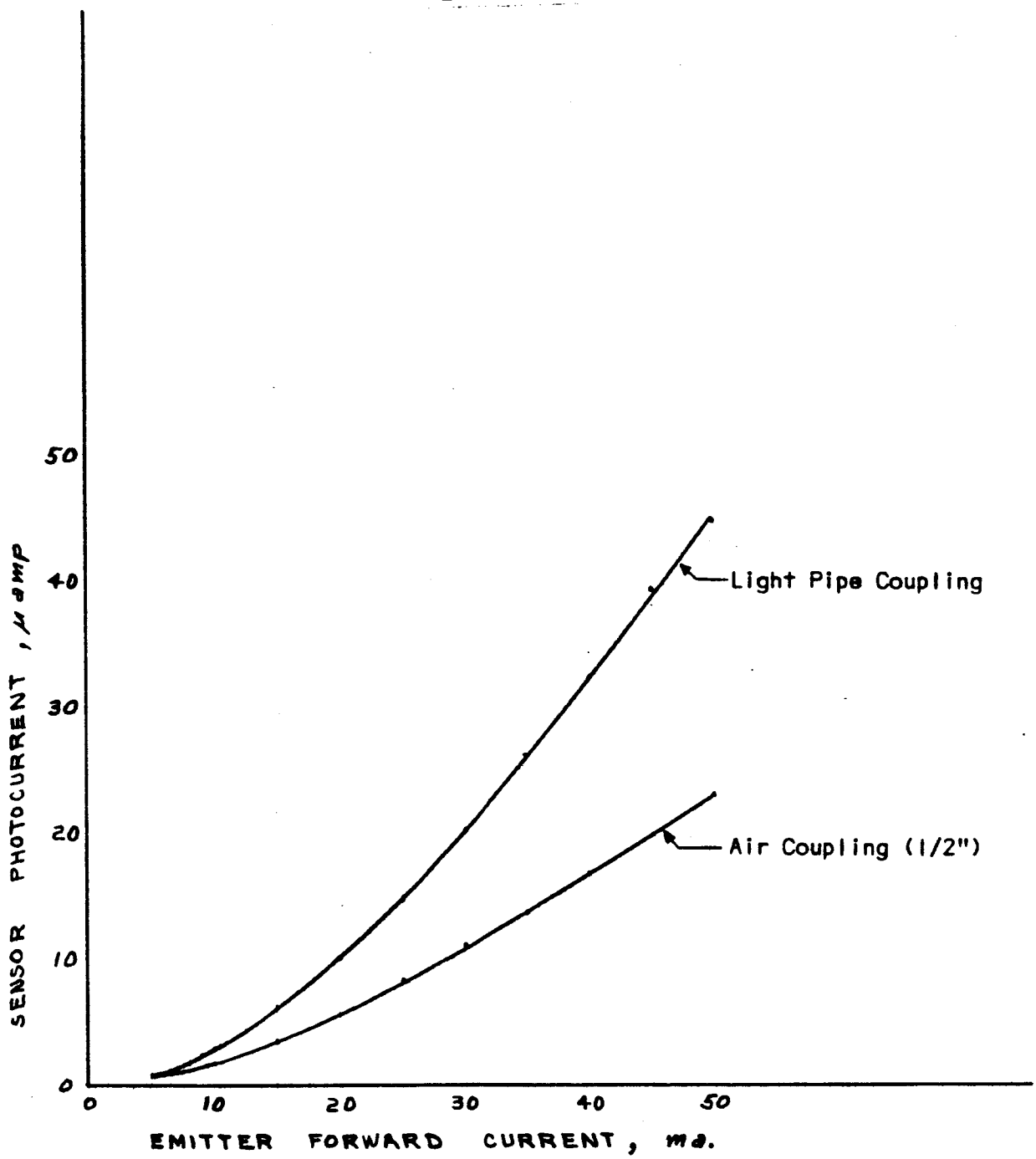


Photocurrent in LS-600 sensor as a function of TIX-L01 emitter forward current with and without light pipe coupling. The emitter/sensor separation in both instances is 1/2 inch. The light pipe is made of acrylic plastic and is 1/2 inch long and 1/8 inch in diameter.

The curve for sensor response without the light pipe was plotted from data in set 5, section 1.

| CALC | RJJ | 18 Mar 66 | REVISED | DATE | | |
|---|---|---|---|---|---|---|
| CHECK | | | | | | |
| APR | | | | | DATA SET 3 SECTION 2 | |
| APR | | | | | | |
| | | | | | THE BOEING COMPANY | PAGE A-93 |

US 4013 8000

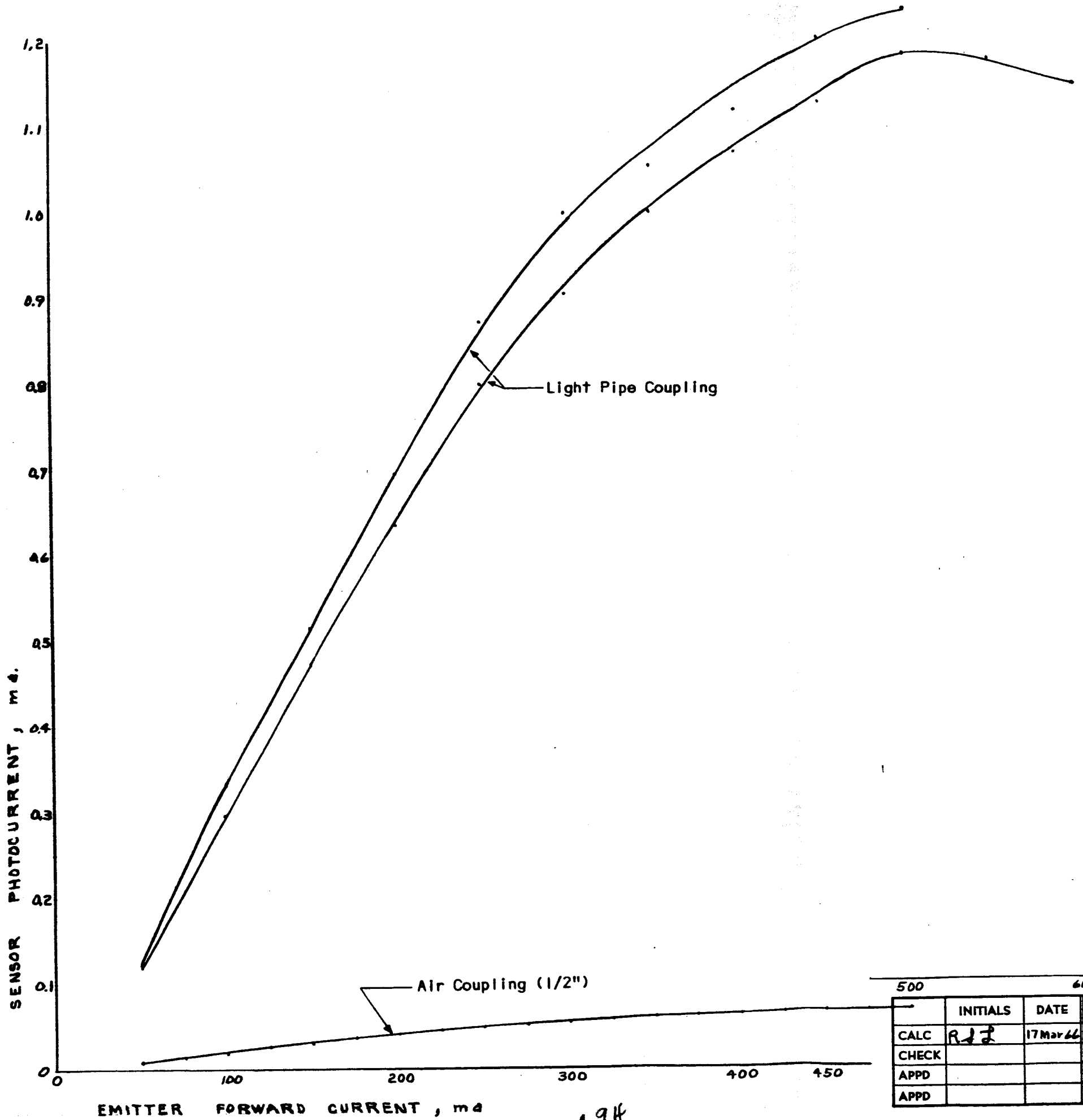


Photocurrent in LS-600 sensor as a function of LED-11 emitter forward current with and without light pipe coupling. The emitter/sensor separation in both instances is 1/2 inch. The light pipe is made of acrylic plastic and is 1/2 inch long and 1/8 inch in diameter.

The two upper curves with the light pipe were made at different times with complete realignment each time.

The curve for sensor response without the light pipe was plotted from data in set 7, section 1.

1- A-9H

| | INITIALS | DATE | REV BY INITIALS | DATE | TITLE | MODEL |
|---|---|---|---|---|---|---|
| CALC | RJZ | 17 Mar 66 | | | DATA SET 3 SECTION 2 | |
| CHECK | | | | | | |
| APPD | | | | | | |
| APPD | | | | | | |

REV LTR _____

U3 4041 7000 REV. 6-64

2-A9H

BOEING NO. D5-13268-3

SH [redacted]

Remarks:

1. The lucite rods were machined from a larger rod. One rod was turned down to 1/8" diameter and 1/2" long. The other rod was turned down to 1/16" diameter and 1/4" long. The finish on the circumference of both rods was equivalent to the original finish (best possible finish with shop equipment) and the ends of the larger rod were finished the same. The ends of the smaller rod were not finished quite as well as the rest.

2. The test setup and an enlarged detail of the light pipe location relative to the emitter and sensor are shown on Page 1.

3. The alignment was extremely difficult to accomplish for maximum coupling. The position of the sensor appeared to be more critical than the emitter. Optimum coupling into the sensor occurred when the sensor was off the centerline and close to the outside edge of the light pipe.

4. The sensor output was measured across the 2K$\Omega$ series resistor for the LED-11 and the TIXL01. A 30 K$\Omega$ series resistor was required with the L12-12 because the sensor saturated with a very low signal otherwise.

5. The coupling measurements for LED-11 emitter and LS-600 sensor were recorded twice. Between recordings the emitter and sensor were purposely misaligned and realigned.

| | INITIALS | DATE | REV BY INITIALS | DATE | TITLE | MODEL |
|---|---|---|---|---|---|---|
| CALC | | | | | | |
| CHECK | | | | | | |
| APPD. | | | | | | |
| APPD. | | | | | | |

U3 4038 8000 REV. 10-64

# SECTION 3

# OPTOELECTRONIC DEVICE APPLICATIONS

# APPENDIX A

## SECTION 3

## OPTOELECTRONIC DEVICE APPLICATION

Data sets included in this section are:

Data Set 1 - Unijunction Transistor Oscillator Circuit Checkout

Data Set 2 - Evaluation of Unijunction Transistor Oscillator, with Optoelectronic input (Raysistor), as a voltage-to-pulse-rate converter (Limited Range)

Data Set 3 - Evaluation of optoelectronic coupling of 4.8 kHz oscillator output in static inverter

Data Set 4 - Application of light source, sensor and fiber optic bundle in an optical tachometer

Data Set 5 - Use of light sensitive FET as gain control switch with operational amplifier

SIGNAL CONDITIONER:

This circuit investigation was performed as preliminary design information for a voltage-to-pulse rate signal conditioner using optoelectronics.

Data on the operating frequency range as well as the output frequency versus timing resistor variations was obtained.

# DATA SHEET

## UNIJUNCTION TRANSISTOR OSCILLATOR

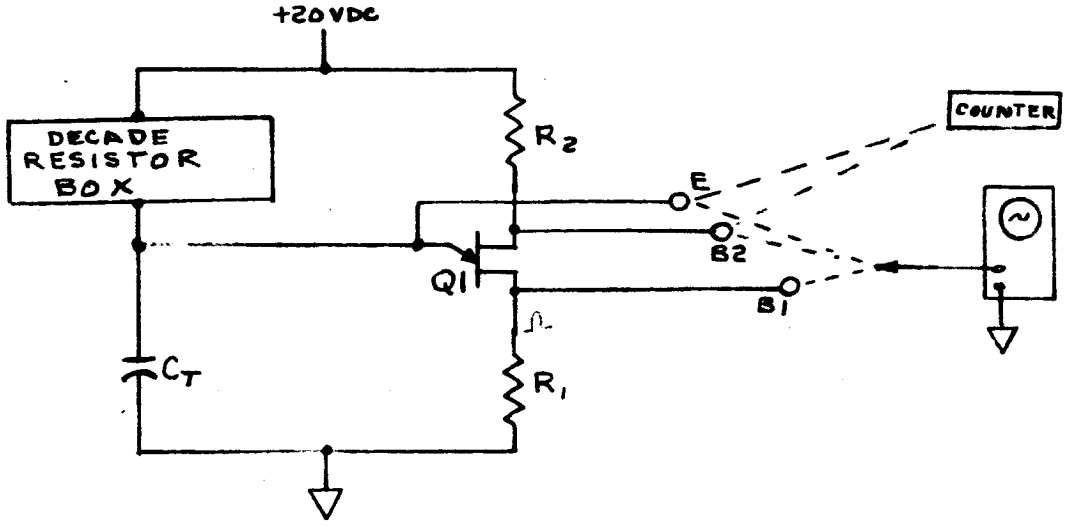


TEST SETUP

### TEST EQUIPMENT LIST

POWER SUPPLY - Lambda LE102
DECADE BOX - GR 1432P S/N35304
OSCILLOSCOPE - Tektronix 535
COUNTER - Beckman 7370N

### PARTS LIST

Q1 - 2N2160
CT - .02 μfd
R1 - 27Ω 5% 1/2 W
R2 - 470Ω 5% 1/2 W

| | INITIALS | DATE | REV BY INITIALS | DATE | TITLE | MODEL |
|---|---|---|---|---|---|---|
| CALC | | | | | | |
| CHECK | RJT | 3 Feb 11 | | | | |
| APPD. | | | | | | |
| APPD. | | | | | | |

U3 4038 8000 REV. 10-64

REV LTR

# DATA SHEET

For each of the three 2N2160 units adjust the decade box for an output frequency of 10 KC (RT = 4 TO 5 KΩ) and measure: the peak $V_E$ called $V_P$; the voltage at $B_2$ with respect to $B_1$ with the capacitor shorted, (called $V_{BB}$).

Unit 1: $V_P = 11.\ V_P$

$V_{BB} = 18.26$ VDC

$$\eta = \frac{V_P - V_D}{V_{BB}} \qquad \text{assume } V_D = .65\,V$$

$\eta = 0.567$

Unit 2: $V_P = 11.0$ VDC

$V_{BB} = 18.706$ VDC

$$\eta = \frac{V_P - V_D}{V_{BB}}$$

$\eta = 0.55$

Unit 3: $V_P = 12.\ V$

$V_{BB} = 18.324$

$$\eta = \frac{V_P - V_D}{V_{BB}}$$

$\eta = .62$

select unit with lowest $\eta$ for final oscillator

| | INITIALS | DATE | REV BY INITIALS | DATE | TITLE | MODEL |
|---|---|---|---|---|---|---|
| CALC | | | | | | |
| CHECK | RJT | 3 Feb 66 | | | | |
| APPD. | | | | | | |
| APPD. | | | | | | |

U3 4038 8000 REV. 10-64

# DATA SHEET

## UJT UNIT SELECTED FOR OSCILLATOR
2N2160 UNIT 1

| READING NO. | DECADE RESISTOR SETTING Ω | PULSE RATE AT E CPS | PEAK VOLTAGE E VDC | B1 Bk VDC | B2 "ON" VDC | |
|---|---|---|---|---|---|---|
| 1 | 2 kΩ | 18,935 | 11 | 2 | 13.5 | |
| 2 | 2.05 k | 18,700 | | | | |
| 3 | 2.2 k | 18,065 | | | | |
| 4 | 2.5 k | 16,727 | | | | |
| 5 | 2.7 k | 15,875 | | | | |
| 6 | 3.0 k | 14,710 | | | | |
| 7 | 3.2 k | 14,020 | | | | |
| 8 | 3.8 k | 12,230 | | | | |
| 9 | 4.2 k | 11,268 | | | | |
| 10 | 4.6 | 10,440 | | | | |
| 11 | 4.7 | 10,256 | | | | |
| 12 | 4.8 | 10,076 | | | | |
| 13 | 4.9 | 9,900 | | | | |
| 14 | 5.0 | 9,732 | | | | |
| 15 | 5.2 | 9,407 | | | | |
| | 5.4 | 9,104 | SKETCH WAVEFORM (OR USE | SKETCH WAVEFORM SCOPE | SKETCH WAVEFORM CAMERA) | |
| | | | SEE | SHEET | 8 | |

| | INITIALS | DATE | REV BY INITIALS | DATE | TITLE | MODEL |
|---|---|---|---|---|---|---|
| CALC | | | | | | |
| CHECK | RST | 3 Feb 66 | | | | |
| APPD. | | | | | | |
| APPD | | | | | | |

U3 4038 8000 REV 10 64

REV LTR

# DATA SHEET

## 2N2160 UNIT 2

| READING NO. | DECADE RESISTOR SETTING Ω | PULSE RATE AT E CPS | PEAK VOLTAGE E VDC | B1 VDC | B2 "ON" VDC | |
|---|---|---|---|---|---|---|
| 1 | 2.8KΩ | 0 | 11 | 2.2V | 12.5 | |
| 2 | 2.9K | 12,798 | | | | |
| 3 | 3.2K | 12,335 | | | | |
| 4 | 3.5K | 11,697 | | | | |
| 5 | 4.0K | 10,602 | | | | |
| 6 | 5.0K | 8,849 | | | | |
| 7 | 6.0K | 7,563 | 11 | 2.2 | 12.5 | |
| 8 | 6.6K | 6,949 | | | | |
| 9 | 7.0K | 6,590 | | | | |
| 10 | 7.6K | 6,120 | | | | |
| 11 | 8.0K | 5,837 | | | | |
| 12 | 8.6K | 5,458 | | | | |
| 13 | 9.0K | 5,230 | | | | |
| 14 | 9.6K | 4,925 | | | | |
| 15 | 10.0K | 4,708 | | | | |
| 16 | 11.0K | 4,327 | | | | |
| 17 | 12.0K | 3,984 | | | | |
| 18 | 13.0K | 3,686 | | | | |
| 19 | 14.0K | 3,436 | | | | |
| 20 | 15.0K | 3,211 | 11 | 2.1 | 12.5 | |
| 21 | 16.8K | 2,876 | | | | |
| 22 | 18.4K | 2,630 | | | | |
| 23 | 20.0K | 2,415 | | | | |
| 24 | 22.5K | 2,154 | | | | |
| 25 | 23.5K | 2,062 | | | | |
| 26 | 24.5K | 1,781 | | | | |
| 27 | 26.0K | 1,864 | | | | |
| 28 | 30.0K | 1,611 | | | | |
| 29 | 35.0K | 1382 | | | | |
| 30 | 40.0K | 1203 | | | | |
| 31 | 48.0K | 998 | | | | |

| | INITIALS | DATE | REV BY INITIALS | DATE | TITLE | MODEL |
|---|---|---|---|---|---|---|
| CALC | | | | | | |
| CHECK | RST | 4 Feb66 | | | | |
| APPD. | | | | | | |
| APPD. | | | | | | |

U3 4038 8000 REV. 10-64

# UJT OSCILLATOR DESIGN DATA

2N2160 : $R_{BB} = 4.0 \text{ to } 12.0\ K\Omega$ @ $V_{BB} = 3V$ $I_E = 0$

$\eta = .47 \text{ to } .80$ @ $V_{BB} = 10V$

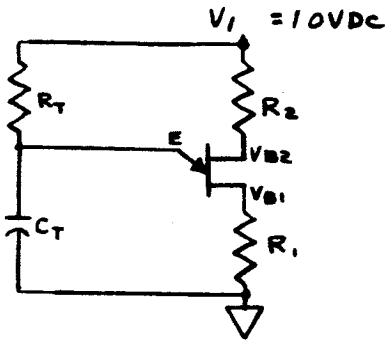


For temperature stabilization : $R_2 = \dfrac{.4\ (R_{BB})}{\eta\ V_1}$

$\approx \dfrac{.4\ (8\ K)}{.65\ (10)}$

$\approx 480\ \Omega$ use $470\ \Omega$

For coarse selection of $C_T$ and $R_T$ assume $\eta = .65$ and that $V_p$ is reached in one RC time. Assume $C_T = .02\mu fd$ and nominal frequency of 12 Kc.

$t = \dfrac{1}{12{,}000} = 8.34 \times 10^{-5}$ sec

$R_T = \dfrac{8.34 \times 10^{-5}}{.02 \times 10^{-6}}$

$= 4160\ \Omega$

| | INITIALS | DATE | REV BY INITIALS | DATE | TITLE | MODEL |
|---|---|---|---|---|---|---|
| CALC | | | | | | |
| CHECK | | | | | | |
| APPD. | | | | | | |
| APPD. | | | | | | |

U3 4038 8000 REV. 10-64

Solving for practical limits for $R_T$:

$$V_P = \eta V_{BB} + V_D$$

Assume: nominal $\eta = .65$

$V_{BB} = 9.5$ V.D.C.

$V_D = .65$ V.DC.

$$V_P = .65(9.5) + .65$$
$$= 6.17 + .65$$
$$= 6.82 \text{ VDC}$$

Condition 1: Solve for Max. $R_T$

$$\frac{V_1 - V_P}{R_T} > I_P \qquad I_P = 25\ \mu a.$$

$$R_T < \frac{10 - 6.82}{25 \times 10^{-6}} = \underline{127\ K\Omega \quad \text{Max. } R_T}$$

Condition 2: Solve for Min. $R_T$

$$\frac{V_1 - V_V}{R_T} < I_V \qquad I_V = 8 \text{ ma} \quad \text{assume } V_V = 1.8 \text{ VDC}$$

$$R_T > \frac{10 - 1.8}{8 \times 10^{-3}} = \underline{1025\ \Omega \quad R_T \text{ Min.}}$$

For $C_T$ use $> .01\ \mu fd$

| | INITIALS | DATE | REV BY INITIALS | DATE | TITLE | MODEL |
|---|---|---|---|---|---|---|
| CALC | | | | | | |
| CHECK | | | | | | |
| APPD. | | | | | | |
| APPD. | | | | | | |

U3 4038 8000 REV. 10-64

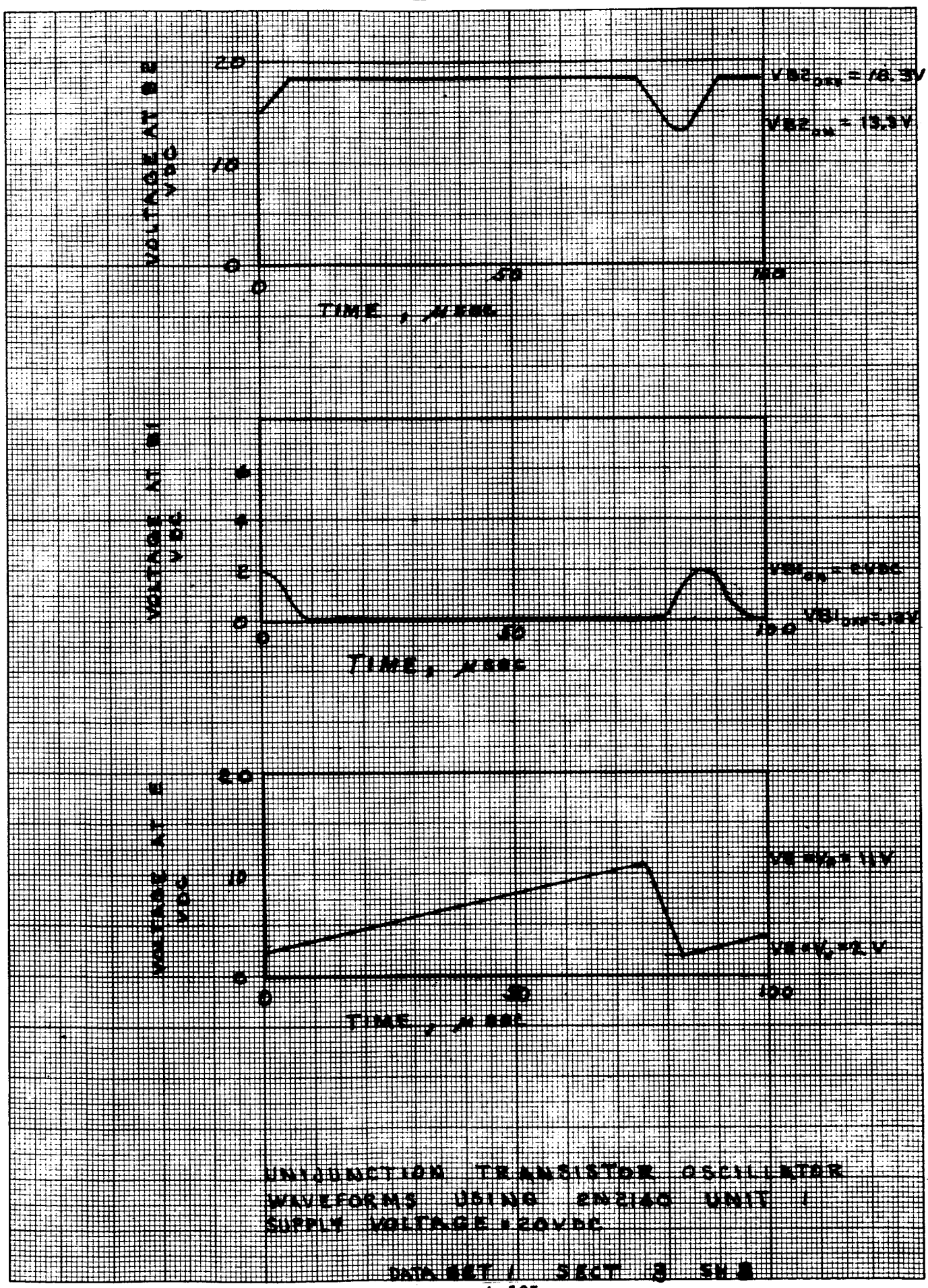


UNIJUNCTION TRANSISTOR OSCILLATOR WAVEFORMS USING ENCIAO UNIT 1
SUPPLY VOLTAGE = 20VDC

DATA SET 1 SECT 3 SH 3

EUGENE DIETZGEN CO.
MADE IN U. S. A.
NO. 340-M DIETZGEN GRAPH PAPER
MILLIMETER

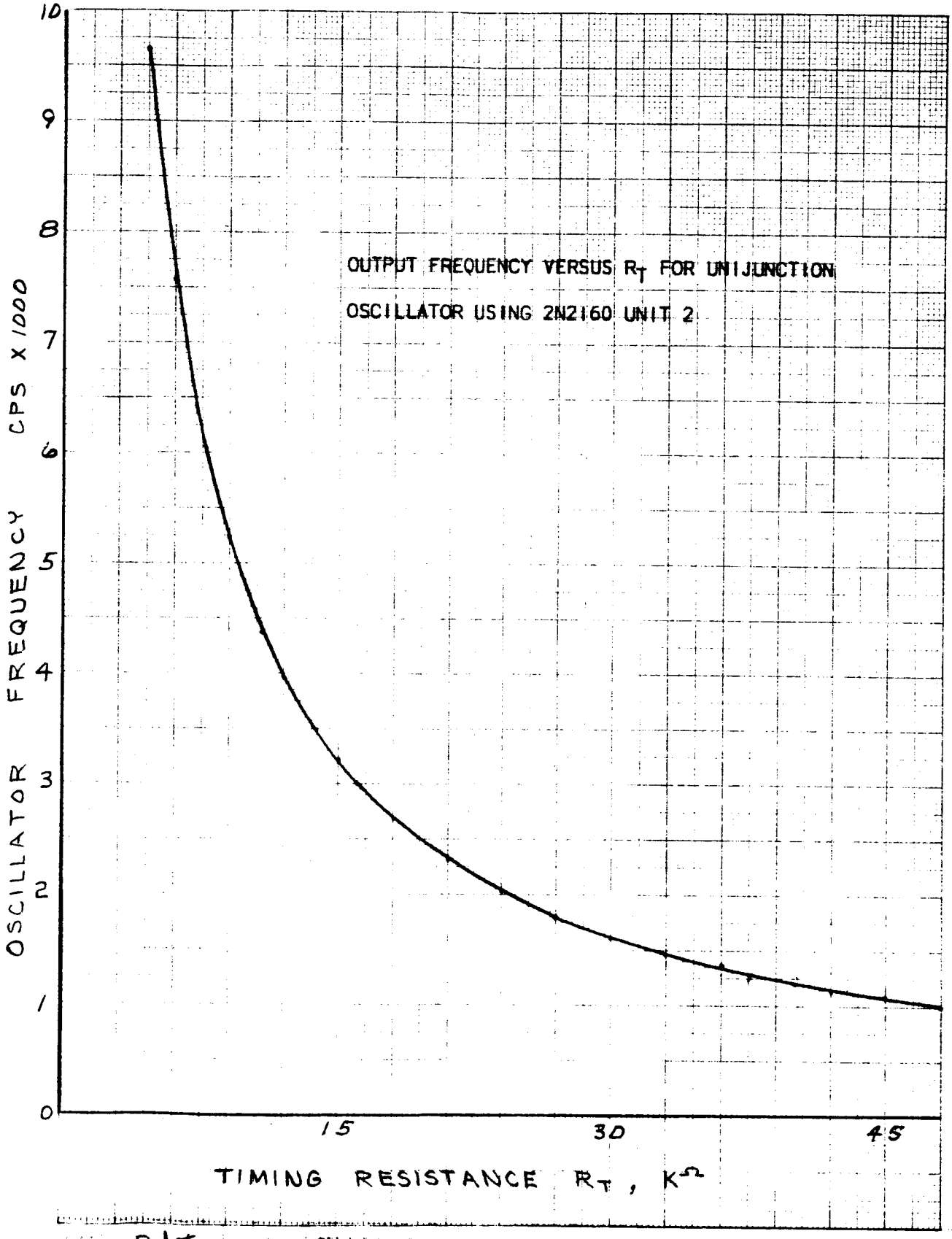


RJT 2F5666 REVISE

## SIGNAL CONDITIONER USING OPTOELECTRONICS

The following data set describes an application of a light source connected to a voltage to be measured. The sensor is a photoconductor (light dependent resistor) connected as a timing resistor in a unijunction oscillator circuit. The frequency output is proportional to the input voltage.

This application is to demonstrate the feasibility and not to provide a finalized design.

# TEST SET UP

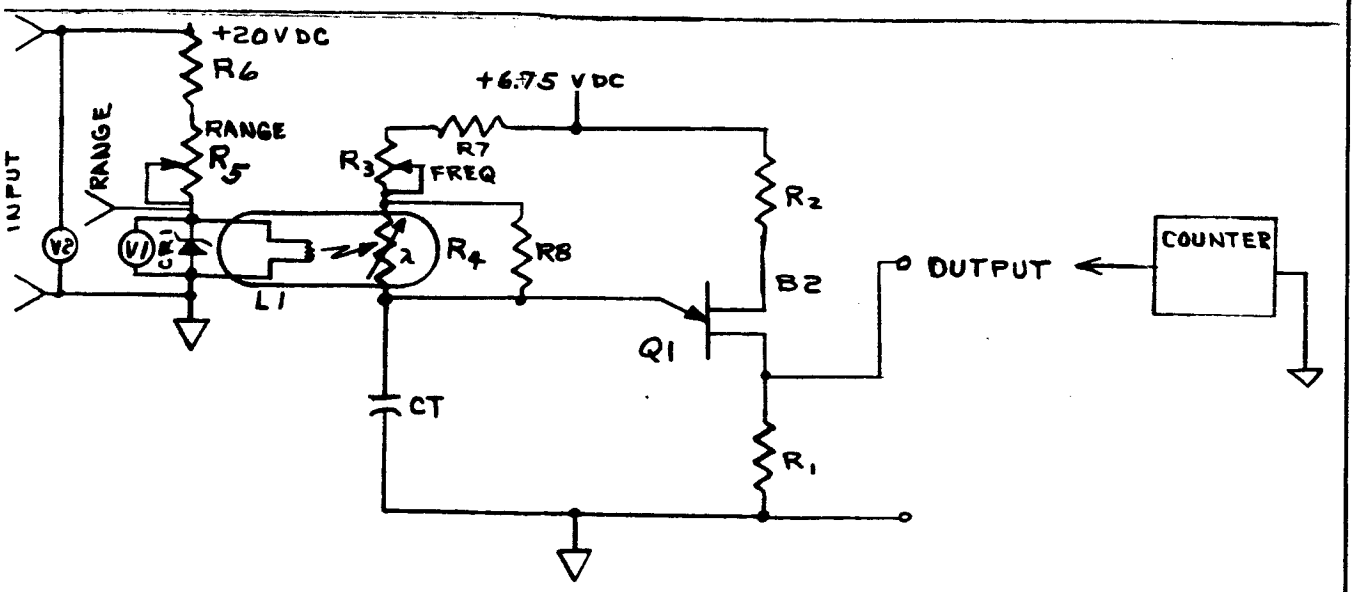


## TEST EQUIPMENT LIST

POWER SUPPLY - 10 to 20VDC
VOLTMETER 1 - FLUKE 803B
VOLTMETER 2 - FLUKE 803B
COUNTER - BECKMAN 7370

## PARTS LIST

Q1 - 2N2160 (UNIT 2)
R1 - 100 Ω 1/8 W 5%
R2 - 470 Ω 1/8 W 5%
R3 - 20 KΩ POT
R4/L1 - CK1116 RAYTHEON
R5 - 2KΩ POT
CT - .02 μfd
R6 - 357 Ω 1%
R7 - 10 KΩ 1/4 W 5%
R8 - 10 KΩ 1/4 W 5%
CR1 - IN746 (3.3V)

| | INITIALS | DATE | REV BY INITIALS | DATE | TITLE | MODEL |
|---|---|---|---|---|---|---|
| CALC | | | | | OSCILLATOR WITH OPTOELECTRONIC INPUT COUPLING USED AS A VOLTAGE TO PULSE RATE CONVERTER FOR LIMIT MONITORING | |
| CHECK | R&I | 2MAR6 | | | | |
| APPD. | | | | | | |
| APPD. | | | | | | |

U3 4038 8000 REV. 10-64

# DATA SHEET

## RAYTHEON "RAYSISTOR" IN UNIJUNCTION OSCILLATOR

| READING NO. | INPUT VOLTAGE V2 | OUTPUT PULSE RATE [2] | | | | |
|---|---|---|---|---|---|---|
| | | $V_1$ = 2.00 [1] | $V_1$ = 2.2 [1] | $V_1$ = 2.6 [1] | | |
| 1 | 18.00 VDC | 1952 CPS | | | | |
| 2 | 18.50 | 1957 | | | | |
| 3 | 19.0 | 1966 | | | | |
| 4 | 19.3 | 1976 | | | | |
| 5 | 19.6 | 1990 | | | | |
| 6 | 19.8 | 2002 | | | | |
| 7 | 20.0 | 2016 | | | | |
| 8 | 20.2 | 2034 | | | | |
| 9 | 20.4 | 2053 | | | | |
| 10 | 20.7 | 2085 | | | | |
| 11 | 21.0 | 2117 | | | | |
| 12 | 21.5 | 2181 | | | | |
| 13 | 22.0 | 2250 | | | | |
| 14 | 22.5 | 2309 | | | | |
| 15 | 19.0 | | 1919 CPS | | | |
| 16 | 19.3 | | 1946 | | | |
| 17 | 19.6 | | 1970 | | | |
| 18 | 19.8 | | 1982 | | | |
| 19 | 20.01 | | 1991 | | | |
| 20 | 20.2 | | 2001 | | | |
| 21 | 20.4 | | 2011 | | | |
| 22 | 20.7 | | 2025 | | | |
| 23 | 21.0 | | 2036 | | | |
| 24 | 21.5 | | 2055 | | | |
| 25 | 19.0 | | | 1975 CPS | | |
| 26 | 19.3 | | | 1983 | | |
| 27 | 19.6 | | | 1990 | | |
| 28 | 19.8 | | | 1994 | | |
| 29 | 20.0 | | | 1997 | | |
| 30 | 20.2 | | | 1999 | | |
| 31 | 20.4 | | | 2003 | | |
| 32 | 20.7 | | | 2007 | | |
| 33 | 21.0 | | | 2010 | | |
| 34 | 21.5 | | | 2016 | | |
| 35 | 22.5 | | | 2027 | | |

[2] ADJUST R3 FOR OUTPUT PULSE RATE OF 2KHz WITH V2 AT 20 VDC (ADJUST R5 FIRST)

[1] ADJUST R5 FOR INDICATED VALUE OF V1 WITH V2 AT APPROX. 20 VDC

| | INITIALS | DATE | REV BY INITIALS | DATE | TITLE | MODEL |
|---|---|---|---|---|---|---|
| CALC | | | | | | |
| CHECK | RJI | 10 Mar 66 | | | | |
| APPD. | | | | | | |
| APPD. | | | | | | |

U3 4038 8000 REV. 10-64

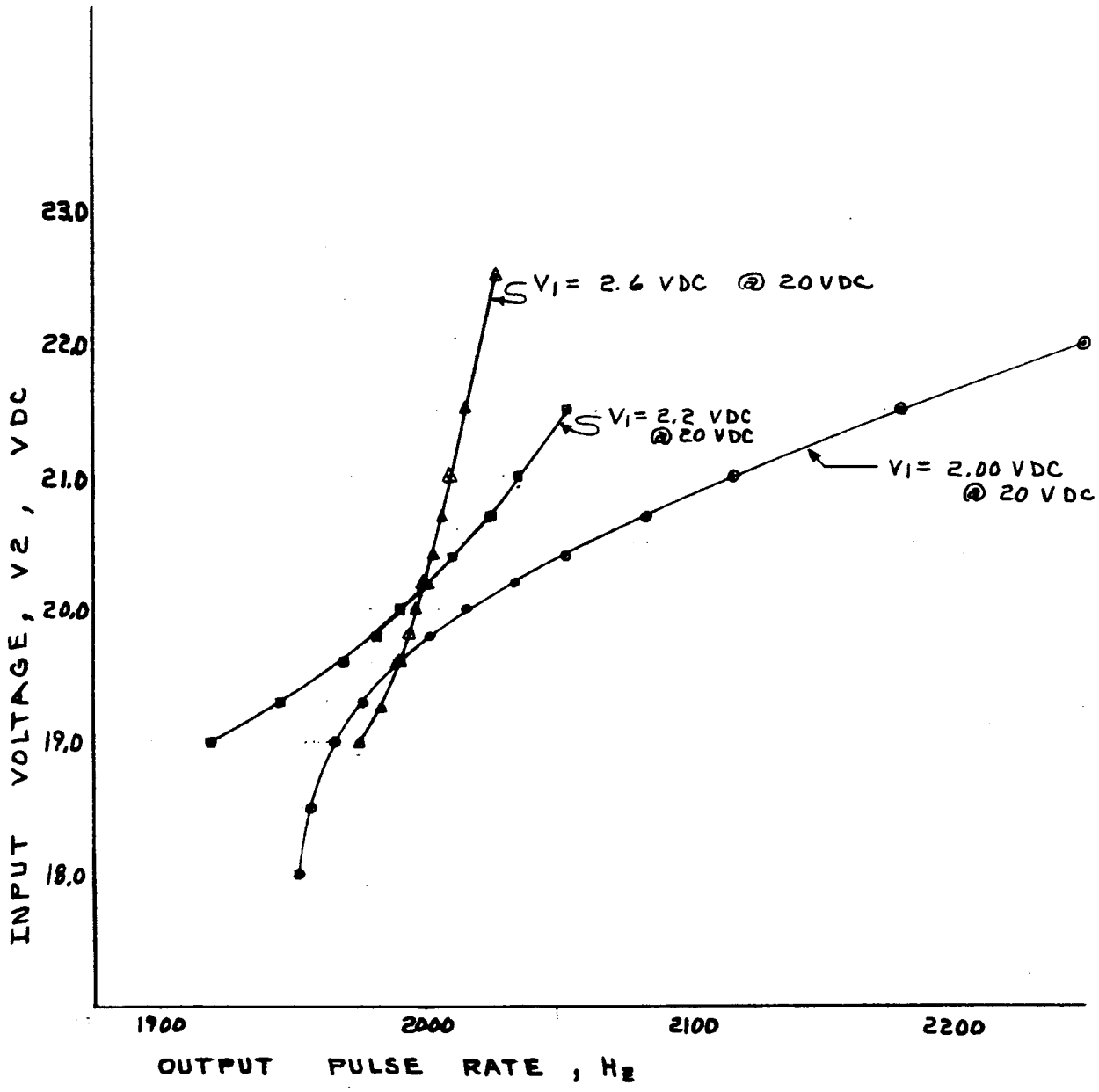


OUTPUT PULSE RATE OF OSCILLATOR WITH OPTOELECTRONIC INPUT COUPLING AS A FUNCTION OF THE INPUT VOLTAGE FOR VARIOUS "RAYSISTOR" OPERATING RANGES.

REMARKS:

1. The Unijunction Transistor Oscillator Circuit was added to the RAYSISTOR voltage monitor circuit as a demonstration of a possible application of this device with a signal conditioner for voltage monitoring within tolerance limits.

   Due to the inherent non-linearity of the RAYSISTOR, the output pulse rate is not linear with input voltage. The RAYSISTOR is a photon coupled device consisting of an incandescent bulb and a photoconductive cell in a TO-5 can. Due to self-heating a finite stabilizing time is required to reach a repeatable output. Before each set of readings was made, the output pulse rate was adjusted and allowed to stabilize at 2000 Hz. Then the voltage, V2, was readjusted and rapid readings were made. For V1 = 2.2 and 2.6 VDC the voltage, V2, was set at the low end first. The other set of readings was made with V2 set at the high end to start.

   The stabilization time may be as high as 10 or 15 minutes, but the frequency drift was only about 6 or 8 Hz in the first 10 minutes. This accounts for the fact that even though the output was set at 2 kHz at 20VDC the pulse rate was different during the rapid measurements. The slope is important here. The output voltage to be monitored would not drift this fast, so to properly evaluate this device, the curves of sheet 3 may be shifted to the center frequency at 20 VDC.

2. The application here would be for monitoring power supply output. For any supply voltage the input can be adjusted to operate on the same point of the RAYSISTOR. From the curves it can be seen that, for applications where tight tolerances and high resolution is required, the RAYSISTOR would be operated at lower voltages than if wider limits were allowed on the voltage to be measured. Also, for more resolution, higher frequencies (such as 5 kHz) may be used. About 8 kHz is as high as is practical for this circuit.

   A table of operating points could be derived as follows:
   (example only)

| For Limit Of | Adjust Raysistor Range For: (with center frequency of) @2000 Hz V1 | @5000 Hz V1 |
|---|---|---|
| ± 2 percent | 2.0VDC | 2.2VDC |
| ± 5 percent | 2.1VDC | 2.4VDC |
| ± 7 1/2 percent | 2.2VDC | 2.6VDC |
| ± 10 percent | 2.4VDC | 2.8VDC |

Voltage - to - Pulse Rate Converter:

Operating Instructions:

1. Connect voltage to be measured to input - Observe polarity. Adjust to nominal value if not already.

2. Connect voltmeter to range (+) and - input (-). Adjust "range" pot to produce 2.1V ± .05VDC at range test point.

3. Connect counter to output. Adjust "Freq." pot to produce desired output frequency (see notes).

4. Varying the input voltage will change the voltage drop across the "RAYSISTOR" input and, therefore, the output frequency.

Notes:

Operating Point of "RAYSISTOR" = 2. to 3.5 VDC

Operating Frequency range of UJT Oscillator; 1 KC to 8 KC

| | INITIALS | DATE | REV BY INITIALS | DATE | TITLE | MODEL |
|---|---|---|---|---|---|---|
| CALC | RJT | 16 Mar 66 | | | | |
| CHECK | | | | | | |
| APPD. | | | | | | |
| APPD. | | | | | | |

U3 4038 8000 REV. 10-64

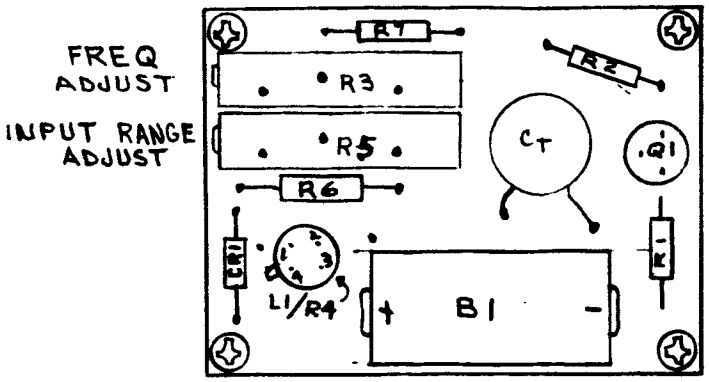


PARTS LAYOUT FOR SIGNAL CONDITIONER

FOR INPUT CIRCUIT PROTECTION OF THE "RAYSISTOR":

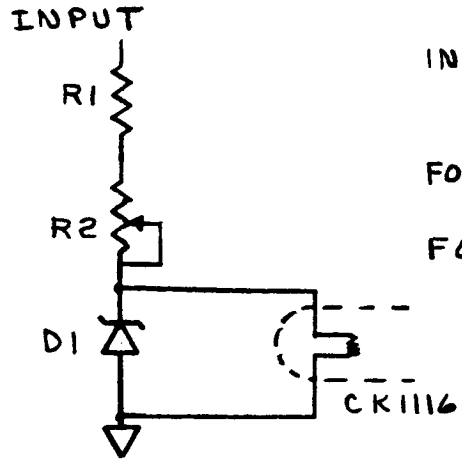


INPUT RESISTANCE OF CK1116 $\approx 200\,\Omega$ Hot (10 ma)

FOR D1 USE IN747 - 3.6V 10%

FOR R1 AND R2 ASSUME INPUT RANGE OF 8VDC TO 22VDC, and operating current of 10 ma. ($V_{CK1116} \approx 2$VDC)

$$(R1+R2)_{MIN} = \frac{8-2}{10 \times 10^{-3}} = 600\,\Omega$$

$$(R1+R2)_{Max} = \frac{22-2}{10 \times 10^{-3}} = 2\,K\Omega$$

Use R1 = $500\,\Omega$
R2 = 0 to $2\,K\Omega$

| | INITIALS | DATE | REV BY INITIALS | DATE | TITLE | MODEL |
|---|---|---|---|---|---|---|
| CALC | RST | 2 Feb 66 | | | | |
| CHECK | | | | | | |
| APPD. | | | | | | |
| APPD. | | | | | | |

U3 4038 8000 REV. 10-64

## PULSE COUPLING WITH OPTOELECTRONICS

Data Set 3 is an application of optoelectronic devices for pulse rate output coupling. A pre-packaged device and a combination of a source and sensor were evaluated.

The source/sensor combination consisted of a T1X-L01 diode light source and an LS-600 silicon light sensor. An amplifier was used as an output signal conditioner. The gyro supply output of a 450 V.A. static inverter (GFE) was used as the pulse rate source. The waveform is a 4.8 kHz square wave operating from 0 to + 18 VDC. (Note: Since the reverse breakdown of diode light sources is only 2 to 5 volts, caution must be used such that pulse rates or steady state dc voltages do not reverse bias the emitter. The sensor must be reverse biased only.)

The first of the following set of photos (Emitter Input-Sensor Output unloaded shows the square wave output driving the T1X-L01 source and the decoupled LS-600 sensor output from the frequency standard in the static inverter, 50MO3398. Device capacitance, rise time and fall time distort the waveform. Saturating the amplifier provides the squared waveform with increased amplitude necessary to trigger a counter.

The second photo in the set (Emitter Input-Sensor Output) shows the input and output of a hpa 4301 photon coupled isolator. Without additional amplification the 4301 had to be driven too hard, requiring excessive current drain on the frequency standard.

The third photo (Upper Trace) shows the result of adding an amplifier stage to the 4301 output. The output is of sufficient amplitude for a counter input, and the current drain on the frequency standard is reduced from about 20mA. to less th 6 mA. The circuit has complete isolation between input and output with unilateral information transfer. There can be no feedback from the measurement circuit into the oscillator circuit.

The waveform shown in the fourth photos (Upper Trace) shows the decoupling circuit output when the circuit is connected to the terminals of the static inverter. For the convenience of demonstration the internal +20VDC supply was used, providing test point isolation but using a common ground. A switching transient can be seen on the output. As a demonstration of circuit reliability the diode light source may be shorted without harming the frequency standard. In addition, the load on the frequency standard is the same whether or not a measurement is being made.

Some additional waveforms are sketched in the drawing entitled 4.8 kHz Decoupling Using hpa 4301 and T1X-L01 and LS-600 and indicate the waveforms of the output circuits without amplifiers, showing the enhanced waveshape with added forward current in the light source.

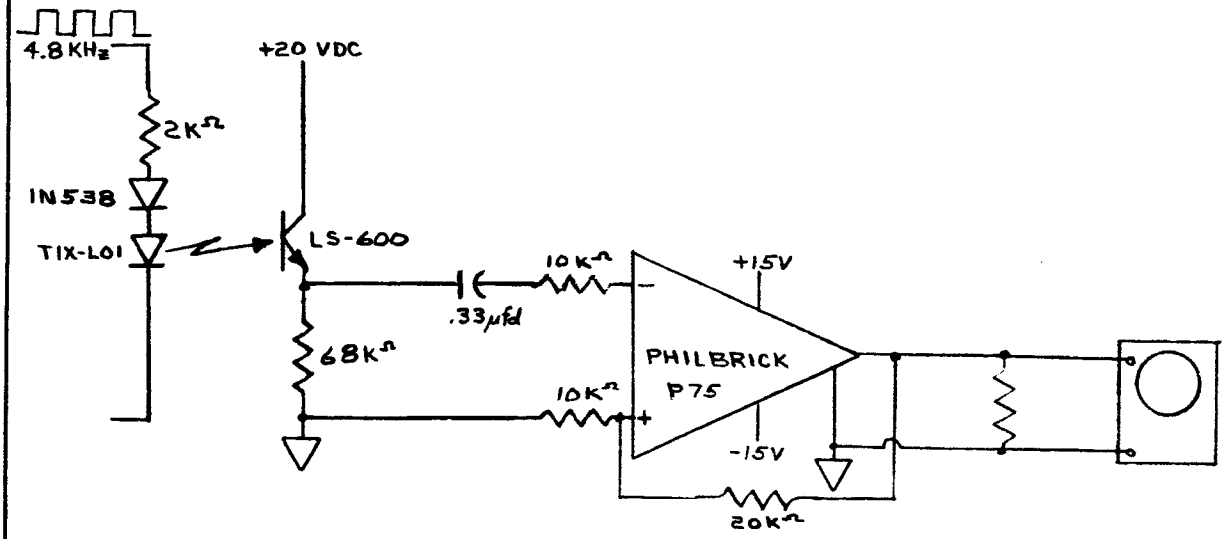


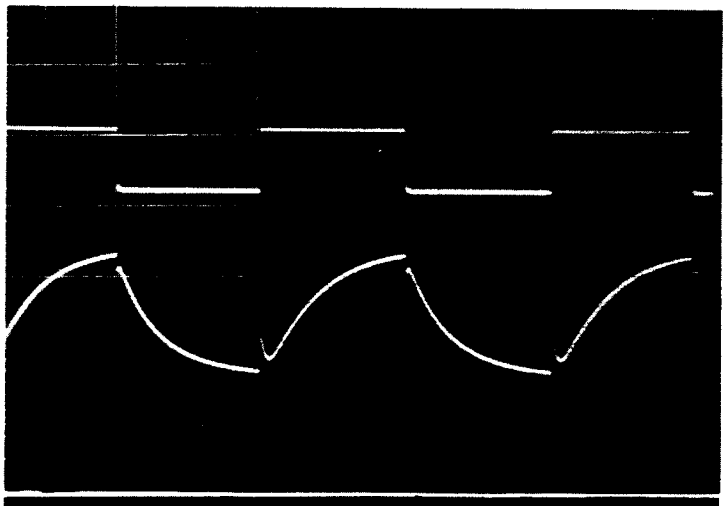

EMITTER INPUT 4.8 KHz
VERTICAL: 20 VOLTS/CM
HORIZONTAL: 50 μsec/CM

SENSOR OUTPUT (UNLOADED)
VERTICAL: .5 VOLTS/cm
HORIZONTAL: 50 μsec/cm

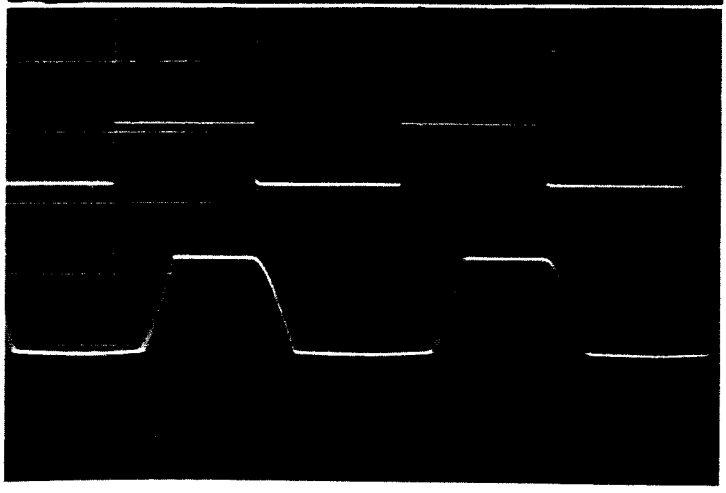

EMITTER INPUT 4.8 KHz
VERTICAL: 20 VOLTS/Cm
HORIZONTAL: 50 μsec/Cm

AMPLIFIER OUTPUT
VERTICAL: 20 VOLTS/Cm
HORIZONTAL: 50 μsec/cm

| | INITIALS | DATE | REV BY INITIALS | DATE | TITLE | MODEL |
|---|---|---|---|---|---|---|
| CALC | RST | 11 Mar 66 | | | | |
| CHECK | | | | | | |
| APPD. | | | | | | |
| APPD. | | | | | | |

U3 4038 8000 REV. 10-64

REV LTR

BOEING NO. D5-13268-3

DATA SET 3, SECTION 3 SH. A-117

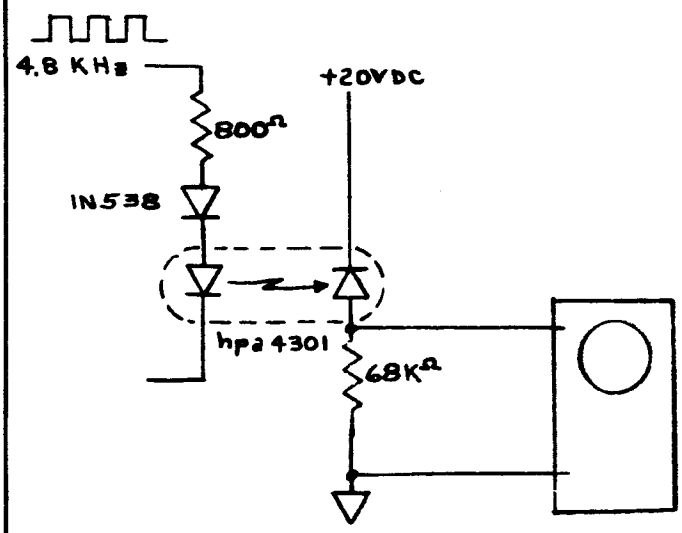


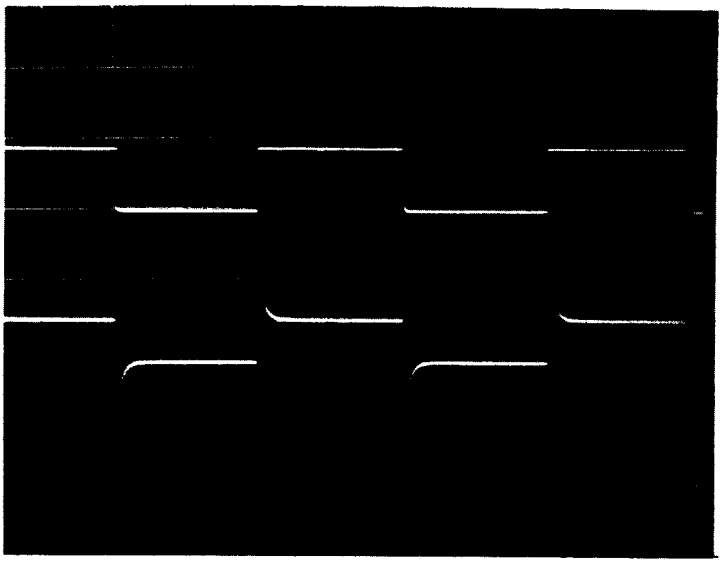

EMITTER INPUT 4.8 KHz
VERTICAL: 20 VOLTS/cm
HORIZONTAL: 50 μsec/cm

SENSOR OUTPUT
VERTICAL: .5 VOLTS/cm
HORIZONTAL: 50 μsec/cm

| | INITIALS | DATE | REV BY INITIALS | DATE | TITLE | MODEL |
|---|---|---|---|---|---|---|
| CALC | | | | | | |
| CHECK | | | | | | |
| APPD. | | | | | | |
| APPD. | | | | | | |

U3 4038 8000 REV. 10-64

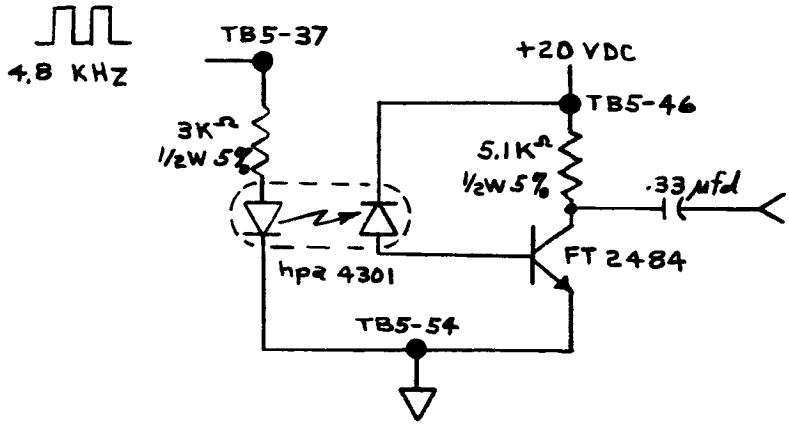


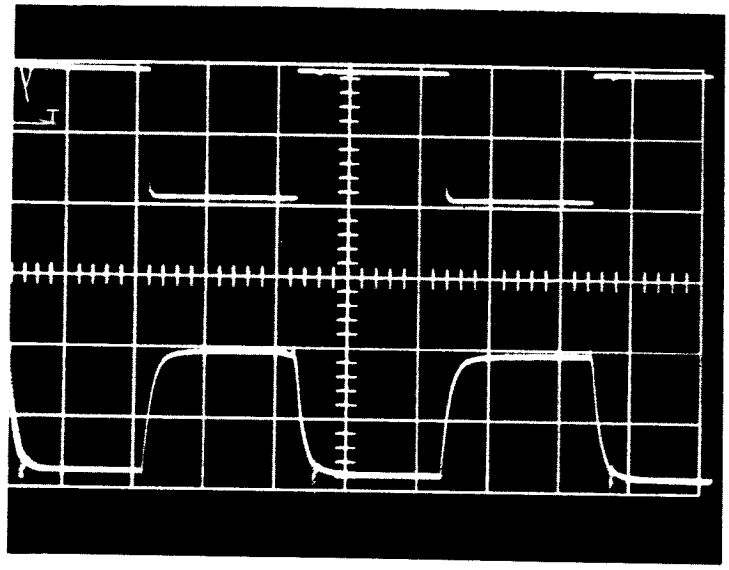

UPPER TRACE : 4.8 KHz
MEASURED AT TB5-37 IN
STATIC INVERTER
VERTICAL — 10 V/CM
HORIZONTAL — 50 μSEC/CM

LOWER TRACE : SENSOR
OUTPUT — MEASURED AT
SENSOR AMPLIFIER
OUTPUT. THE AMPLIFIER
IS CONNECTED TO THE
INTERNAL +20 VDC
SUPPLY IN THE STATIC
INVERTER, THE COMMON
IS THE SAME FOR INPUT
AND OUTPUT.

VERTICAL — 1 V/CM
HORIZONTAL — 50 μSEC/CM

| | INITIALS | DATE | REV BY INITIALS | DATE | TITLE | MODEL |
|---|---|---|---|---|---|---|
| CALC | R S F | 28 Mar 6 | | | Pulse Rate Coupling Out Of S-I Static Inverter - Provides Decoupled 4.8 KHz Output For Further Processing | |
| CHECK | | | | | | |
| APPD. | | | | | | |
| APPD. | | | | | | |

U3 4038 8000 REV. 10-64

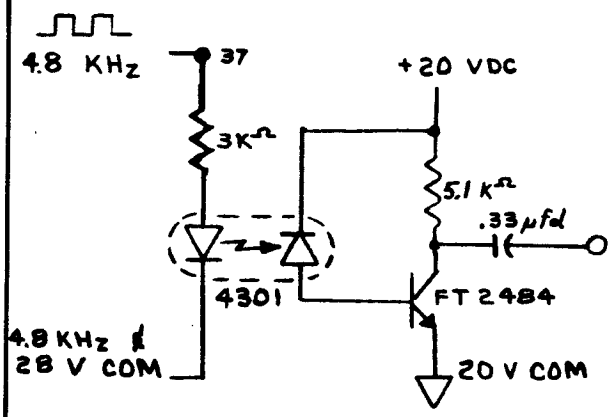


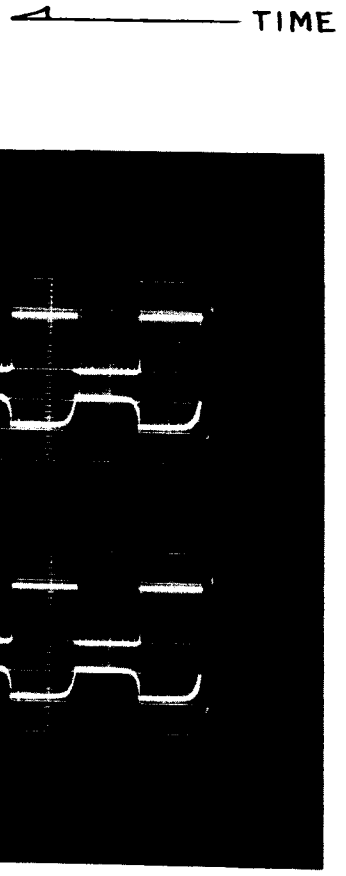


UPPER TRACE: 4.8 KHz
MEASURED AT TB5-37 IN
STATIC INVERTER
VERTICAL - 10 VOLTS/CM
HORIZONTAL - 50 μSEC/CM

LOWER TRACE: SENSOR OUTPUT
MEASURED AT SENSOR AMPLIFIER
OUTPUT WHICH IS CONNECTED
TO AN EXTERNAL +20V
SUPPLY FOR COMPLETE
ISOLATION.
VERTICAL - 2 VOLTS/CM
HORIZONTAL - 50 μSEC/CM

| | INITIALS | DATE | REV BY INITIALS | DATE | TITLE | MODEL |
|---|---|---|---|---|---|---|
| CALC | RJT | 25 Mar 6 | | | Pulse Rate Coupling - Provides Decoupled 4.8 Kc From Static Inverter For Further Processing | |
| CHECK | | | | | | |
| APPD. | | | | | | |
| APPD. | | | | | | |

U3 4038 8000 REV. 10-64

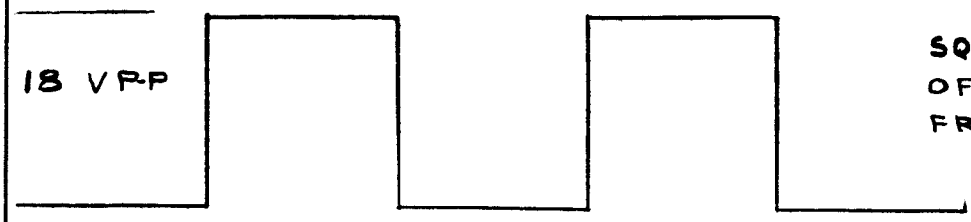


SQUARE WAVE OUTPUT OF STATIC INVERTER FREQUENCY STANDARD

DECOUPLED OUTPUT OF PHOTON COUPLED ISOLATOR hpa 4301

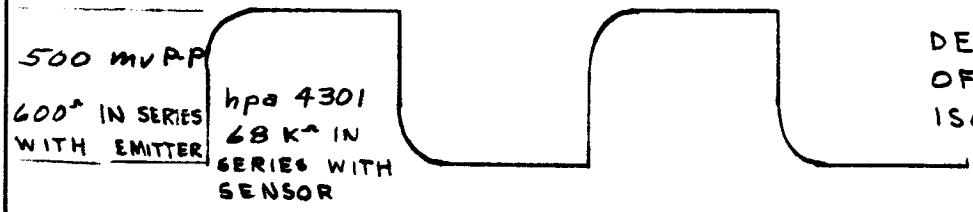


DECOUPLED OUTPUT OF PHOTON COUPLED ISOLATOR hpa 4301

DECOUPLED OUTPUT USING TIX-L01 SOURCE AND LS-600 SENSOR.

| | INITIALS | DATE | REV BY INITIALS | DATE | TITLE | MODEL |
|---|---|---|---|---|---|---|
| CALC | | | | | 4.8 KHz DECOUPLING USING hpa 4301 AND TIX-L01 AND LS-600 | |
| CHECK | | | | | | |
| APPD. | | | | | | |
| APPD. | | | | | | |

U3 4038 8000 REV. 10-64

FIBER OPTIC APPLICATION - OPTICAL TACHOMETER

1. As a demonstration of several optoelectronic components, a tachometer was built employing a light source and a light sensor connected by optical fibers. This circuit demonstrates the use of an indandescent light source, the transmission of light with fiber optics, and the sensing and amplifying of light pulses. In addition the gathering of reflected light was evaluated.

2. The emitter/sensor combination selected for the tachometer was chosen because of the broad energy distribution of the incandescent bulb and the broad sensitivity curve of the sensor, as well as the low current requirement of the Pinlite.

3. The reason for developing the optical tachometer was not for the sake of designing a tachometer, but was to demonstrate the use of optoelectronic devices (such as emitters and sensors) from the packaging and handling standpoint along with the associated driving and output circuits. In addition the handling and use of fiber optics was demonstrated.

   The things learned from this experiment include:

   a. Difficulties in optical alignment;
   b. Difficulty of handling the emitters;
   c. High current requirement problems.

4. In breadboarding the tachometer the 60 Hz noise was as large as the coupled signal due to the high impedance sensor circuit. This difficulty and alignment were the two main problems involved with optoelectronic devices in this application.

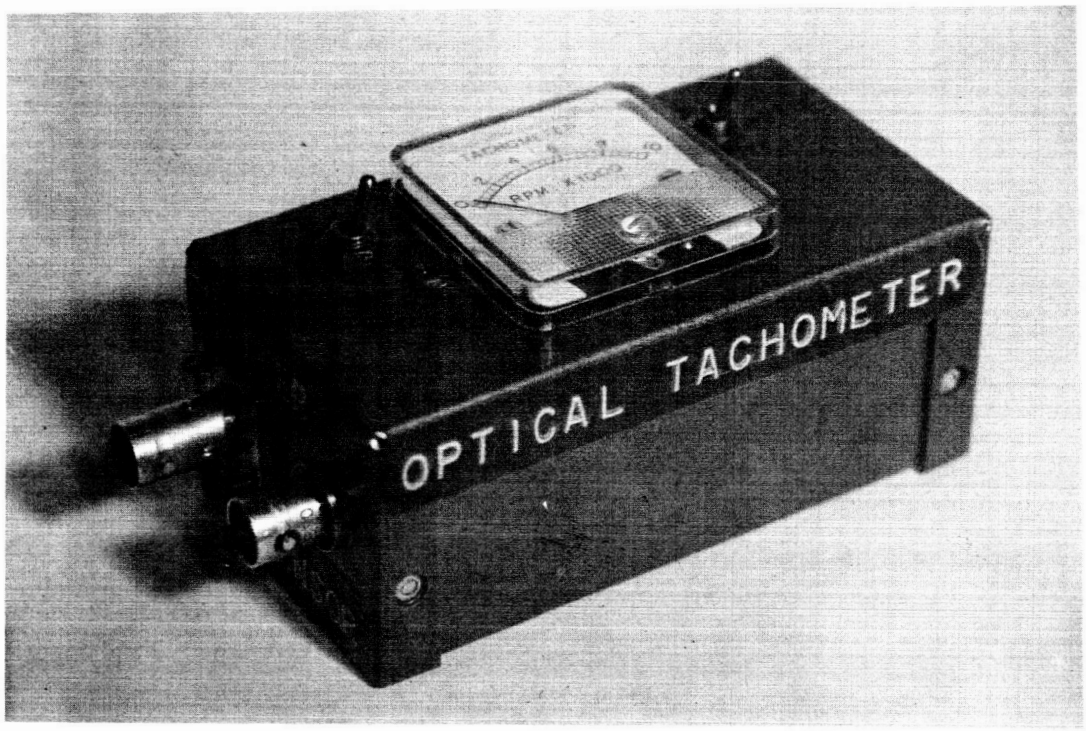


PACKAGED TACHOMETER INCLUDING THE LIGHT SOURCE, DRIVER CIRCUIT, SENSOR, SENSOR AMPLIFIER, METER AMPLIFIER, METER AND BATTERIES.

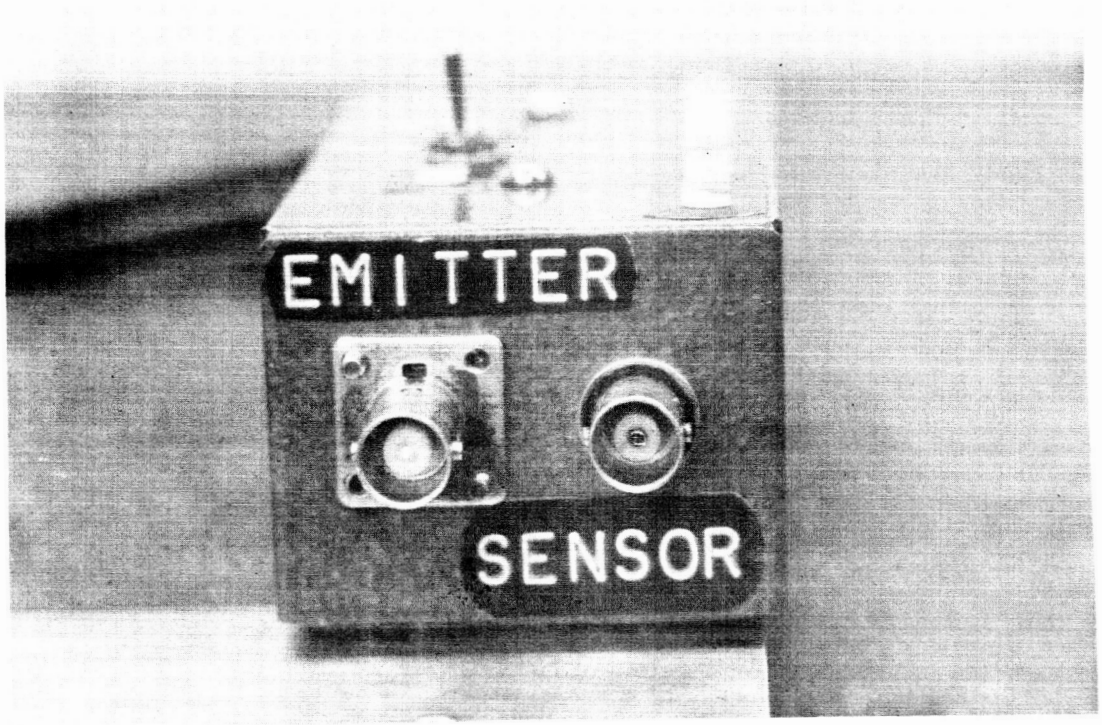


EMITTER/SENSOR END OF TACHOMETER.
THE EMITTER IS ILLUMINATED.

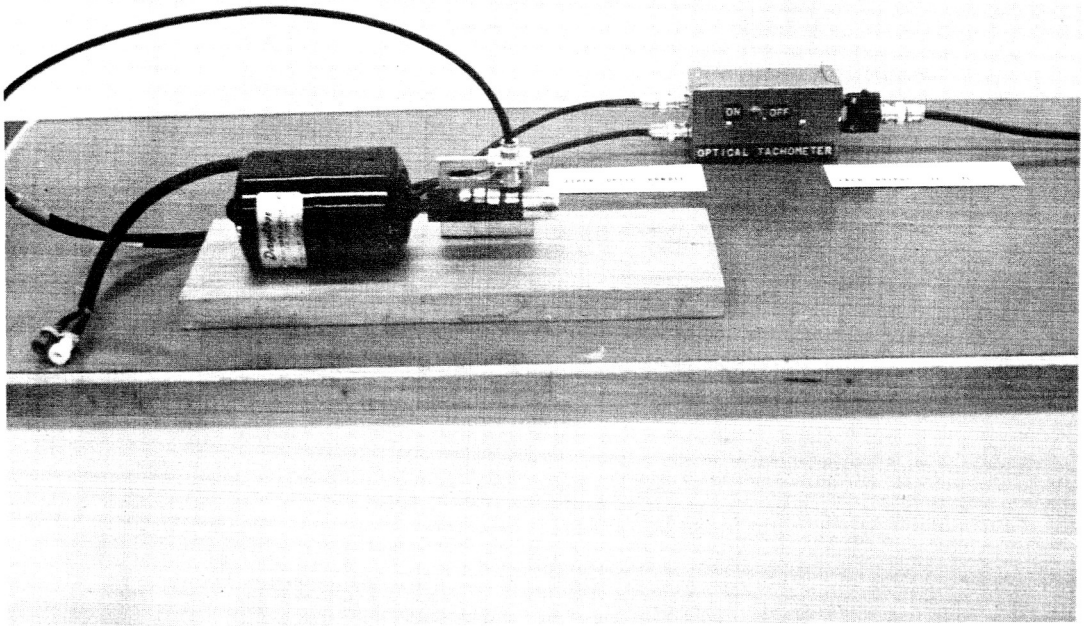


TACHOMETER CONNECTED FOR OPERATION. THE FIBER OPTIC PASSES LIGHT TO THE REFLECTIVE MATERIAL ON THE SHAFT. THE LIGHT IS REFLECTED BACK TO THE SENSOR AMPLIFIED AND SENT TO A COUNTER.

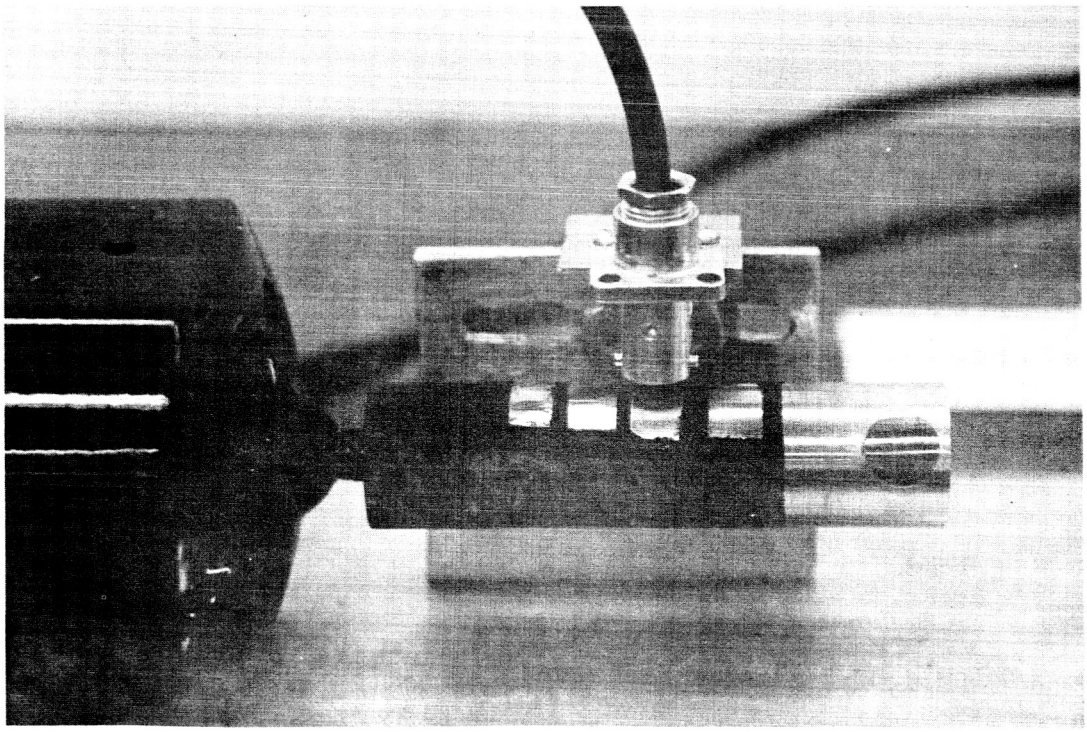

CLOSE-UP OF THE MOTOR SHAFT WITH SEVERAL DIFFERENT REFLECTIVE MATERIALS AND DETAIL OF THE FIBER OPTIC MOUNTING TECHNIQUE.

# DATA SHEET

## OPTICAL TACHOMETER

Output Waveform :

SWEEP – RIGHT TO LEFT

Upper trace ; 5 V/cm Vertical
2 ms/cm Horizontal

Bottom Trace ; 5 V/cm Vertical
1 ms/cm Horizontal

Motor Speed : Approx 7900 RPM

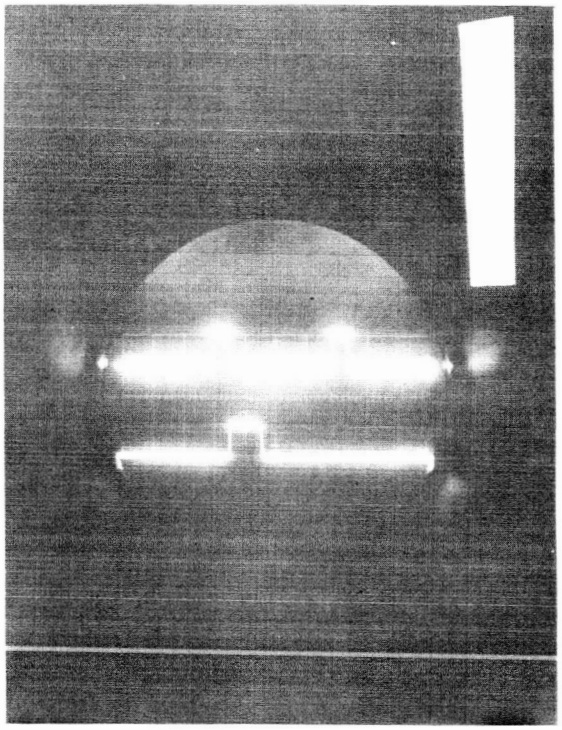

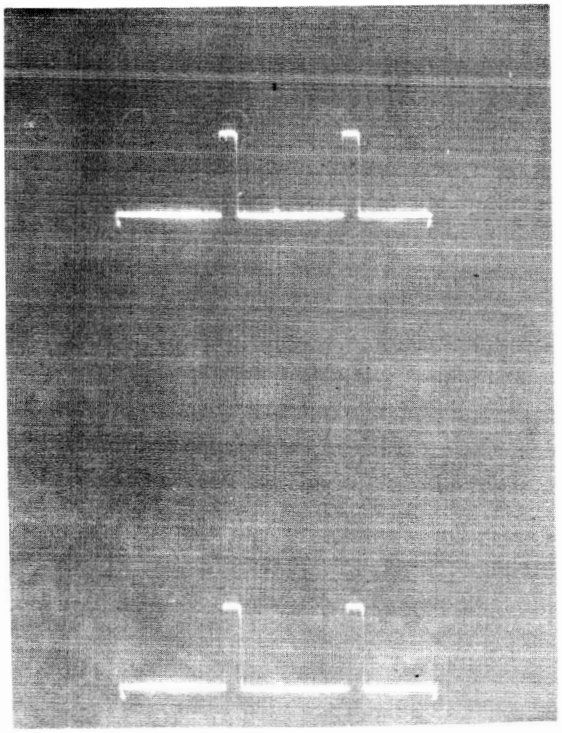

Output Waveform :

sweep – Right to Left

2V/cm vertical

2 millisec/cm Horizontal

Motor Speed – Approx. 7500 RPM

| | INITIALS | DATE | REV BY INITIALS | DATE | TITLE | MODEL |
|---|---|---|---|---|---|---|
| CALC | | | | | | |
| CHECK | RJZ | 22Feb66 | | | | |
| APPD. | | | | | | |
| APPD. | | | | | | |

U3 4038 8000 REV 10-64

REV LTR

OPERATING INSTRUCTIONS:

1. The tachometer can be calibrated using the fluctuating output of a fluorescent light. For applications producing one light reflection per revolution the meter should be calibrated for 7200 rpm by adjusting the potentiometer. (Two pulses per revolution require an adjustment to 3600 rpm, etc.)

2. Since the light source causes a 12mA drain on the batteries, they may need replacement often. If in doubt as to the light output, an oscilloscope may be connected to the counter output jacks (meter need not be on) and the output waveform observed. It must be a good reliable square wave. The fiber optic alignment becomes more critical as the battery deteriorates.

3. Fiber optic alignment is begun by mounting the end approximately 1/4 inch from the shaft and perpendicular to it. The shaft is rotated at about 5000 rpm and with the oscilloscope monitoring the counter output, adjust the fiber optic for the best square wave.

4. If it desired to shine light from the emitter, through a light interrupter, and into another fiber optic to the sensor, the single fiber optic bundle may be connected to the sensor and one half of the split bundle used to transmit the light from the emitter.

THE FOLLOWING DATA WAS TAKEN AFTER THE UNIT WAS CALIBRATED AT 7200 RPM BY MONITORING THE FLOURESCENT LIGHT FLUCTUATIONS. THE WAVEFORM WAS THEN MONITORED WHILE THE MOTOR WAS RUNNING TO VERIFY THE ALIGNMENT BY ADJUSTING FOR A RELIABLE SQUARE WAVE OUTPUT. THE MOTOR SPEED WAS THEN VARIED AND THE METER READING AND PULSE RATE WERE RECORDED.

| COUNTER READ OUT P.P.S. | MOTOR SPEED COMPUTED FROM COUNTER READOUT | METER READING RPM |
|---|---|---|
| 324 | 9730 RPM | 9500 |
| 300 | 9000 | 8900 |
| 280 | 8400 | 8400 |
| 240 | 7200 | 7200 |
| 200 | 6000 | 6100 |
| 180 | 5400 | 5300 |
| 150 | 4500 | 4600 |
| 120 | 3600 | 3600 |
| 80 | 2400 | 2400 |

| | INITIALS | DATE | REV BY INITIALS | DATE | TITLE | MODEL |
|---|---|---|---|---|---|---|
| CALC | RJT | 21 Mar | | | | |
| CHECK | | | | | | |
| APPD. | | | | | | |
| APPD. | | | | | | |

U3 4038 8000 REV. 10-64

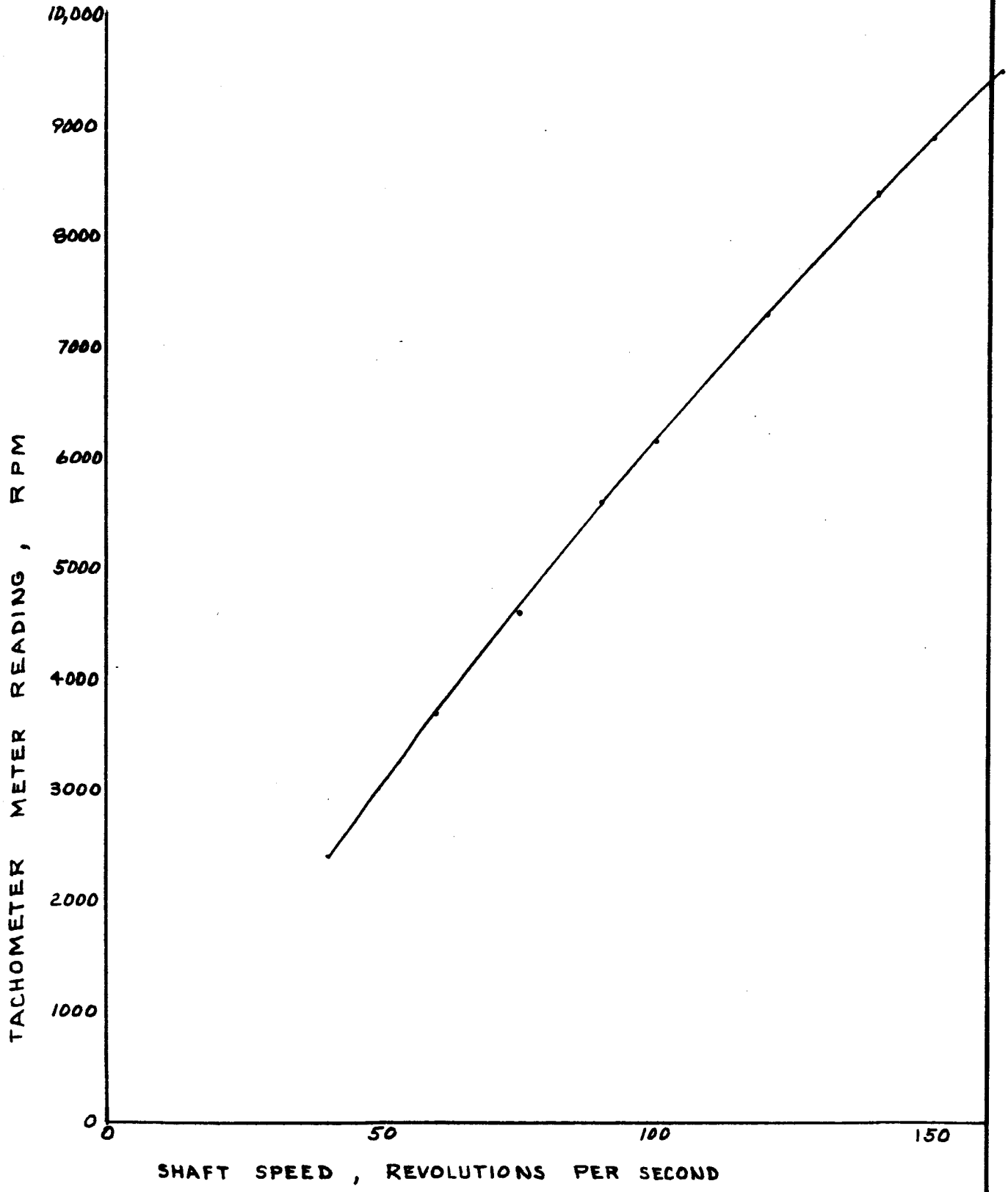


TACHOMETER METER READING VERSUS ACTUAL SHAFT SPEED. TWO PULSES PER REVOLUTION WERE USED TO SMOOTH THE POINTER FLUCTUATIONS AT LOW SPEED.

| CALC | R S I. | 18 Mar 6 | REVISED | DATE | | |
|---|---|---|---|---|---|---|
| CHECK | | | | | | |
| APR | | | | | DATA SET 4, SECTION 3 | |
| APR | | | | | | |
| | | | | | THE BOEING COMPANY | PAGE A-128 |

US 4913 8000

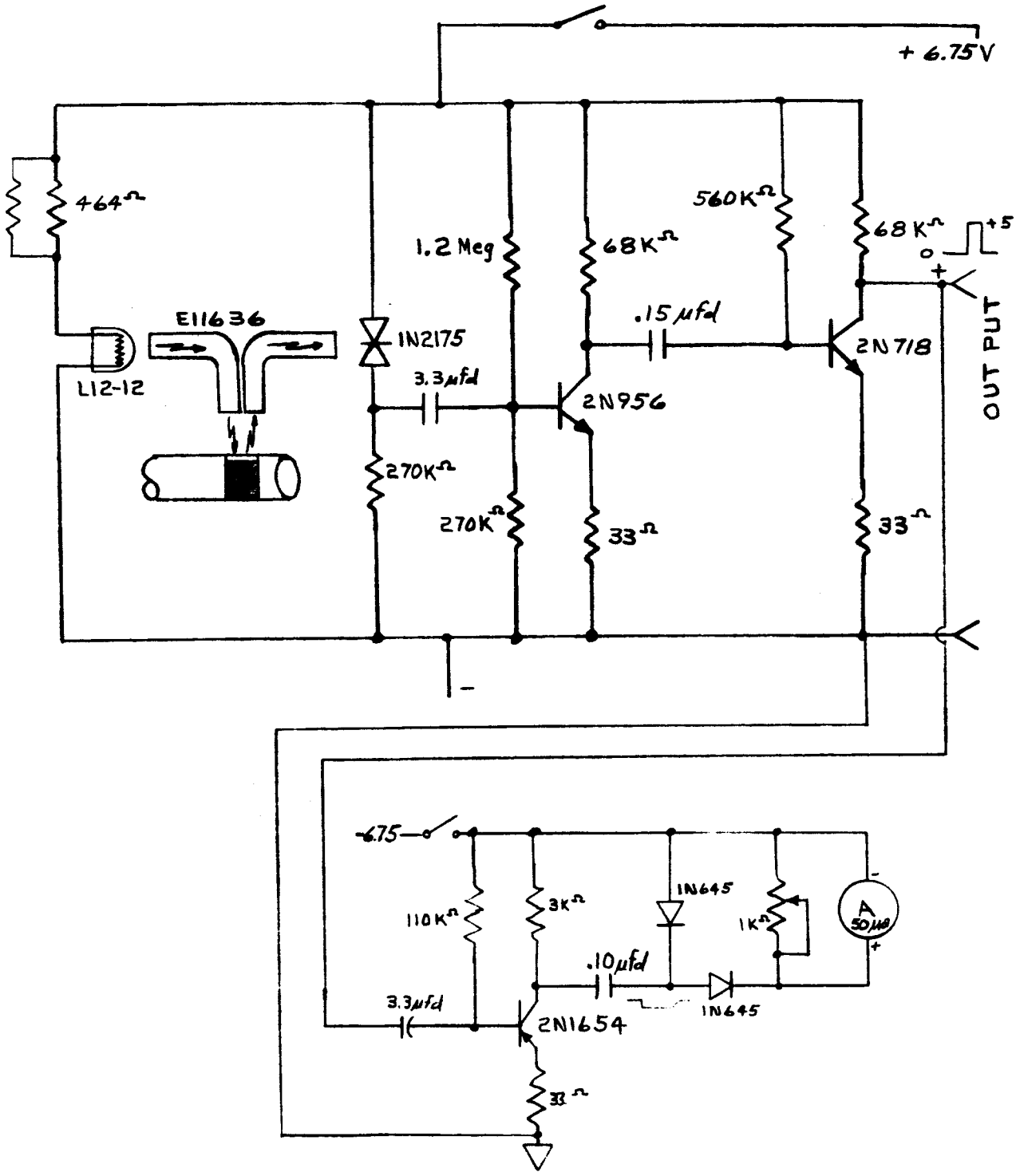


| | INITIALS | DATE | REV BY INITIALS | DATE | TITLE | MODEL |
|---|---|---|---|---|---|---|
| CALC | RJI | 4Mar66 | | | OPTICAL TACHOMETER SCHEMATIC | |
| CHECK | | | | | | |
| APPD. | | | | | | |
| APPD | | | | | | |

U3 4038 8000 REV. 10-64

REV LTR

BOEING NO. D5-13268-3

DATA SET 4, SECTION 3 SH. A-129

DEMONSTRATION TEST:

As a demonstration of an optoelectronic application to DC measurements, an easy demonstration set-up can be made.

1. Use a DC power supply as the voltage to be measured. The current drain for the two sources used is from 10mA to 600mA.

2. Use the three-foot fiber optic bundle B11636 with the BNC connectors.

3. Use either the T1X-L02 or the LED-11 in the BNC plug modified to serve as a heat sink. Connect it to the BNC Receptacle on the fiber optic bundle.

4. Press the LS-600 sensor (mounted on the TO-5 header) into the BNC plug on the other end of the bundle.

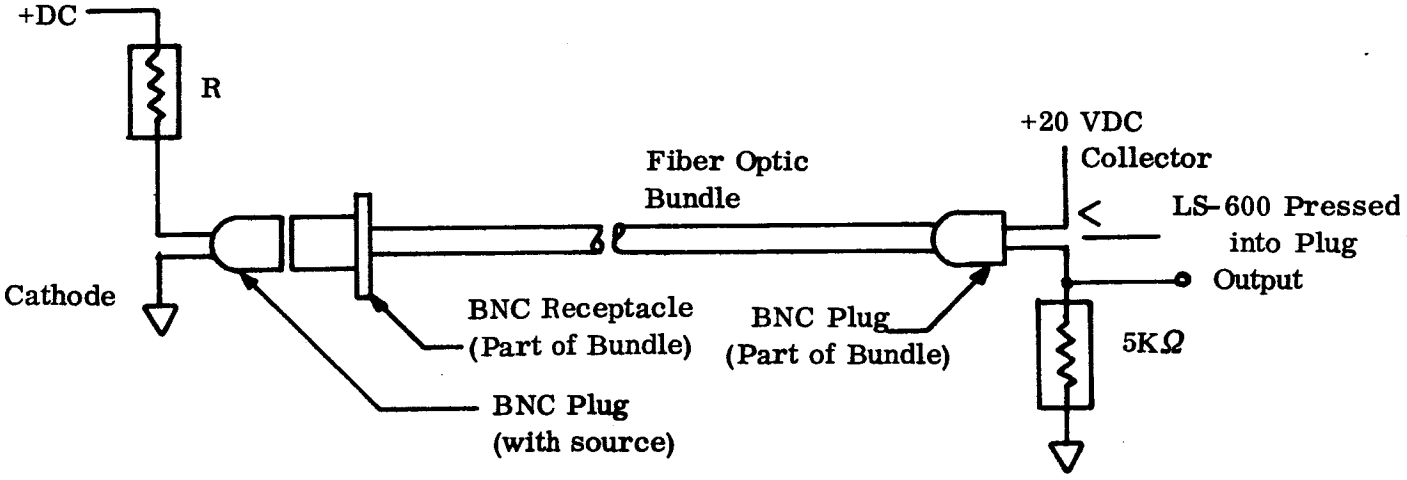


5. Choose R such that the source current is within the range of the device. Observe polarities. See Section 2, Set 1.

PHOTOSENSITIVE FIELD EFFECT TRANSISTOR APPLICATION:

An investigation of the use of a photosensitive FET as a light sensitive switch in an operational amplifier feedback circuit is described here.

# DATA SHEET

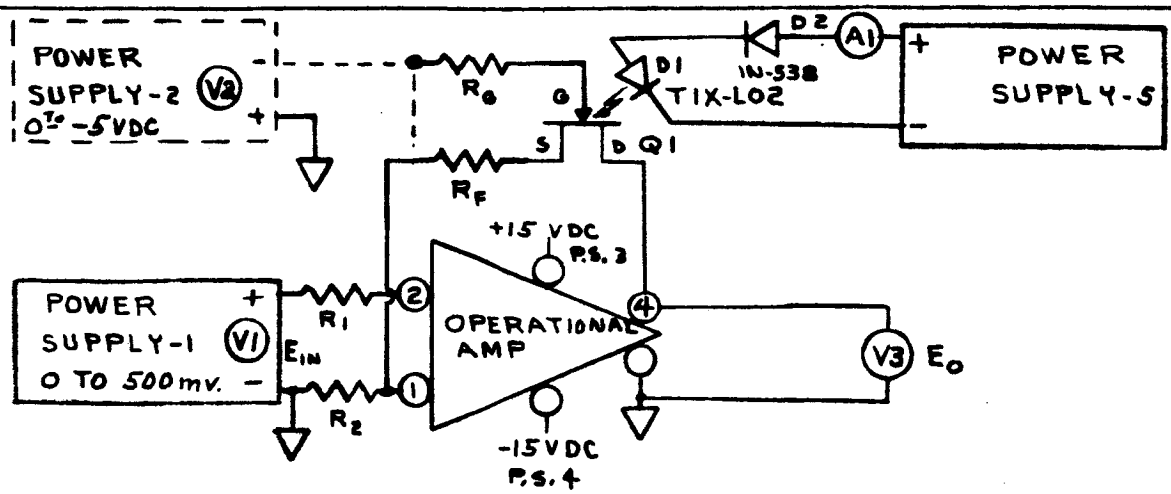


TEST SET-UP

## TEST EQUIPMENT LIST

POWER SUPPLY 1 : FLUKE 470D
2 : KINTEL 301
3 : HP 721 A
4 : TRYGON M36-15A
5 : HARRISON 6244A

VOLTMETER 1 : HP 3440A
2 : HP 3440A
3 : HP 3440A

AMMETER 1 : WILLIAMSON VOLT/AMMETER SENSITIVE RESEARCH

## PARTS LIST

OPERATIONAL AMP: BURR-BROWN 1901

$R_1$ : 10 KΩ

$R_2$ : 10 KΩ

$R_F$ : 10 KΩ-100KΩ DECADE BOX

$R_G$ : 1 Megohm

Q1 : PHOTO FET FF-600 CRYSTALONICS

D1 : TIX-L02 T. I.

D2 : IN-538

## SET-UP INSTRUCTIONS

1. CONNECT $R_G$ TO AMPLIFIER PIN 1
2. ADJUST POWER SUPPLY 1 TO +500 mv
3. ADJUST POWER SUPPLY 5 FOR SUFFICIENT CURRENT TO SWITCH THE FET TO THE CONDUCTING STATE- RECORD DATA
4. ADJUST POWER SUPPLY 5 FOR INCREASED CURRENT-RECORD DATA
5. CONNECT $R_G$ TO POWER SUPPLY 2 AND REPEAT STEPS 2 THRU 4

| | INITIALS | DATE | REV BY INITIALS | DATE | TITLE | MODEL |
|---|---|---|---|---|---|---|
| CALC | | | | | INVESTIGATION OF PHOTOSENSITIVE FET AS GAIN CHANGE SWITCH WITH OPERATIONAL AMPLIFIER | |
| CHECK | | | | | | |
| APPD. | | | | | | |
| APPD. | | | | | | |

U3 4038 8000 REV. 10-64

# DATA SHEET

| AMPLIFIER INPUT VOLTAGE | GATE VOLTAGE $V_G$ | FEEDBACK RESISTOR $R_f$ IN SERIES WITH FET | EMITTER CURRENT WHERE FET STARTS TO SWITCH | EMITTER CURRENT WHEN OUTPUT MEASURED | OUTPUT VOLTAGE FET CONDUCTING | OUTPUT VOLTAGE FET SHORTED |
|---|---|---|---|---|---|---|
| +499.6 mv | $R_G$ Tied to INPUT PIN 1 | 40 K$\Omega$ | 27.5 ma | | | |
| | | | | 75 ma | +2.49 V | +2.478 |
| | | | | 55 ma | +2.503 | +2.483 |
| | | | | 0 ma | | +2.491 |
| +497.6 mv | | 60 K$\Omega$ | 144 ma | | | |
| | | | | 400 ma | +3.335 V | +3.332 V |
| | | | | 290 ma | +3.364 V | +3.360 V |
| | | | | 0 ma | | +3.481 V |
| 497.6 m | | 80 K$\Omega$ | 305 ma | | | |
| | | | | 350 ma | +4.311 V | +4.294 V |
| | | | | 450 ma | +4.275 V | +4.266 V |
| | | | | 0 ma | | +4.468 V |
| | | | | 450 ma | | +4.253 V |
| | | 100 K$\Omega$ | (REQUIRES TOO MUCH EMITTER CURRENT) 550 ma | | | |
| +494.8 mv | -775.9 mv | 20 K$\Omega$ | 63.5 ma | | | |
| | | | | 125 ma | +1.494 V | +1.484 V |
| | | | | 150 ma | +1.491 V | +1.485 V |
| | | | | 0 ma | | +1.485 V |
| 494.0 mv | -775.9 mv | 40 K$\Omega$ | 185 ma | | | |
| | | | | 300 ma | +2.479 V | +2.472 V |
| | | | | 400 ma | +2.477 V | +2.472 V |
| | | | | 0 ma | | +2.472 V |
| 493.3 mv | -776.0 mv | 60 K$\Omega$ | 340 ma (DRIFTED TO 390 ma IN A FEW MINUTES | | | |
| | | | | 500 ma | +3.470 V | +3.457 V |
| | | | | 600 ma | +3.464 V | +3.456 V |
| | | | | 0 ma | | +3.456 V |

TEST SET-UP FOR ABOVE DATA SHOWN ON SHEET 1

| | INITIALS | DATE | REV BY INITIALS | DATE | TITLE | MODEL |
|---|---|---|---|---|---|---|
| CALC | | | | | INVESTIGATION OF PHOTOSENSITIVE FET AS GAIN CHANGE SWITCH WITH OPERATIONAL AMP IN NON-INVERTING MODE | |
| CHECK | | | | | | |
| APPD. | | | | | | |
| APPD. | | | | | | |

U3 4038 8000 REV. 10-64

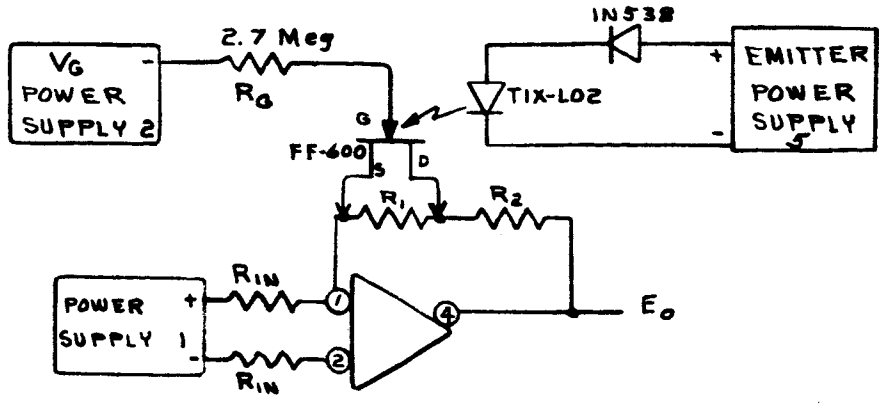


| AMPLIFIER INPUT VOLTAGE | GATE VOLTAGE $V_G$ | OUTPUT VOLTAGE: FET DISCONNECTED FROM $R_1$ | FET REVERSE BIASED | WITH LIGHT INCIDENT ON FET GATE: EMITTER CURRENT | FET CONDUCTING | FET SHORTED | FET DISCONNECTED FROM R1 – R1 SHORTED |
|---|---|---|---|---|---|---|---|
| $R_{IN}$ = 10 KΩ 0.1% , $R_1$ = 51 KΩ 1% , $R_2$ = 49 KΩ 1% | | | | | | | |
| +1.003 VDC | -9.005 V | -10.002 | -10.002 | 665 ma | -4.75 V | -4.75 V | |
| -1.004 V | -9.005 V | +10.002 | +10.002 | 690 ma | +5.072 V | +5.054 V | |
| -1.001 V | | | | 740 ma | | +5.037 V | +4.896 V |
| +1.000 V | | | | 740 ma | | -4.750 V | -4.893 V |
| $R_{IN}$ = 1 KΩ 1% , $R_1$ = 10 KΩ 1% $R_2$ = 10 KΩ 1% | | | | | | | |
| +499.9 mv | -9.032 V | -9.95 V | -9.95 V | 620 ma | -4.972 V | -4.940 V | -4.97 V |
| -500.5 mv | -9.032 V | +9.975 V | +9.976 V | 510 ma | +5.053 V | +5.014 V | +4.978 |
| | | | | $R_G$ = 3.7 Meg | | | |
| $R_{IN}$ CHANGED TO 10 KΩ .1% , $R_G$ CHANGED TO 3.7 MEGΩ | | | | | | | |
| -499.8 mv | -9.012 V | +1.001 V | +1.002 V | 540 ma | +529.6 mv | +525.9 mv | +498.4 mv |
| +499.1 mv | -9.012 V | -1.005 V | -1.003 V | 535 ma | -480.4 mv | -476.8 mv | -504.1 mv |

| | INITIALS | DATE | REV BY INITIALS | DATE | TITLE | MODEL |
|---|---|---|---|---|---|---|
| CALC | | | | | INVESTIGATION OF PHOTOSENSITIVE FET AS GAIN CHANGE SWITCH WITH OPERATIONAL AMP IN INVERTING MODE. | |
| CHECK | | | | | | |
| APPD. | | | | | | |
| APPD. | | | | | | |

U3 4038 8000 REV. 10-64

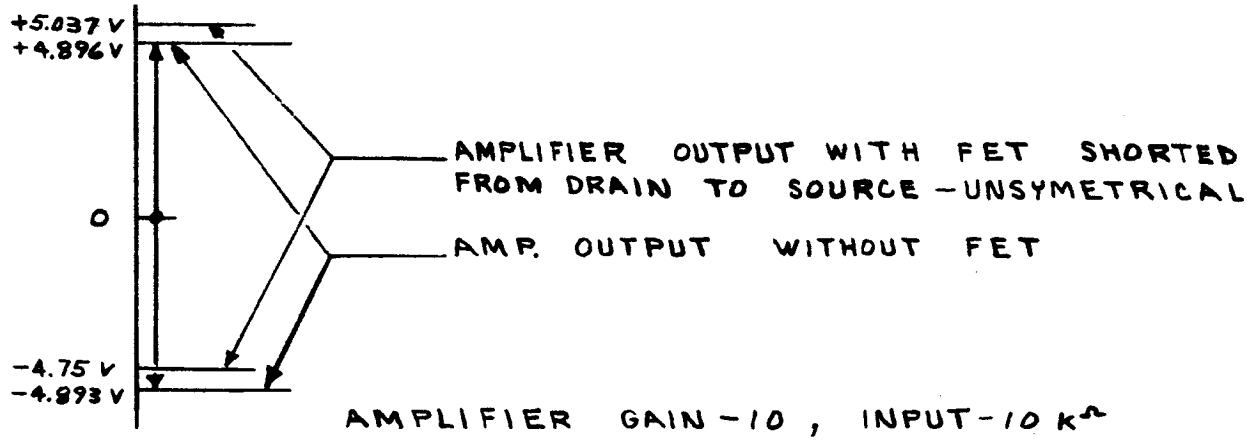


AMPLIFIER GAIN - 10 , INPUT - 10 KΩ

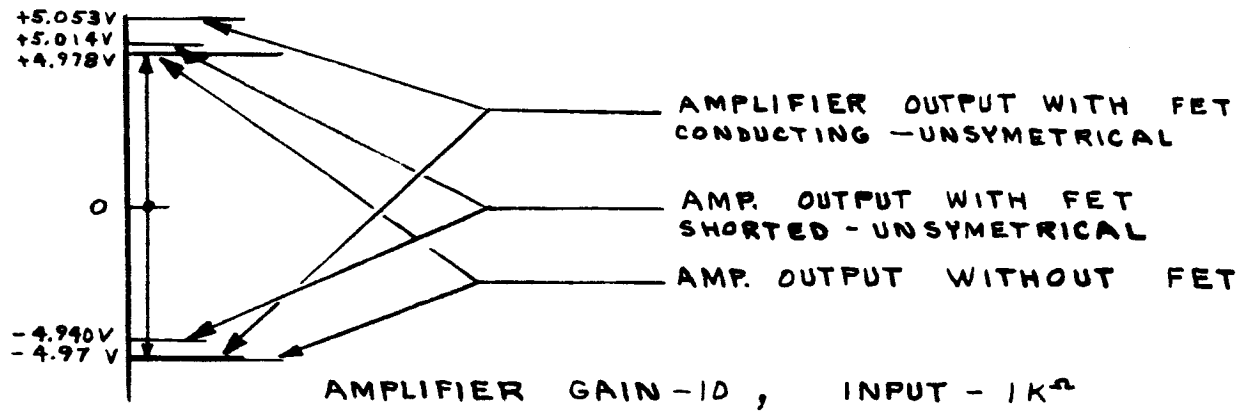


AMPLIFIER GAIN - 10 , INPUT - 1 KΩ

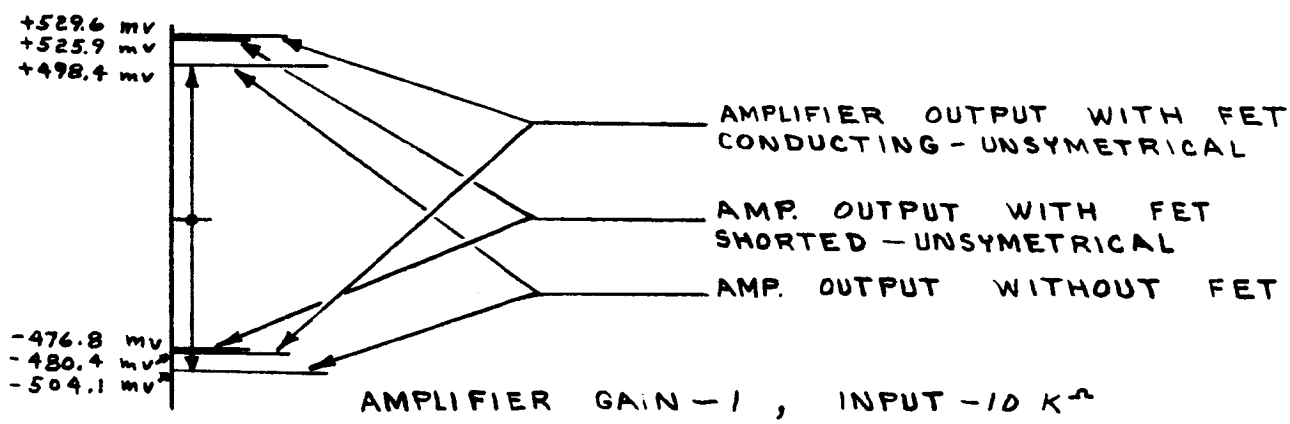


AMPLIFIER GAIN - 1 , INPUT - 10 KΩ

| | INITIALS | DATE | REV BY INITIALS | DATE | TITLE | MODEL |
|---|---|---|---|---|---|---|
| CALC | RJZ | 31 Mar 6 | | | GRAPHICAL DESCRIPTION OF RESULTS OF INVESTIGATION OF EMPLOYING PHOTO-SENSITIVE FET AS GAIN CHANGE SWITCH WITH INVERTING OPERATIONAL AMPLIFIER. | |
| CHECK | | | | | | |
| APPD. | | | | | | |
| APPD. | | | | | | |

U3 4038 8000 REV. 10-64

REMARKS:

1. The data on sheet 2 was recorded with the amplifier connected in the non-inverting mode, such that the output was more positive than the input used (N-channel FET). This allowed the gate resistor, $R_G$, to be connected to the input for biasing rather than employing a separate DC bias supply. In this mode the drop across the feedback resistor provides the turn-off bias. It was found that with less than 40KΩ the FET would not turn off.

2. The light current caused by the incident photons produces an error voltage at the amplifier input, which results in an offset voltage at the output. The error is negative, producing an output error of from 30mV to 250mV more positive no matter what the true input signal polarity is.

3. The gate to source breakdown voltage (10VDC) causes a limitation in the maximum allowable negative drain to source voltage. The amplifier used could provide up to ± 13.5VDC output. With the full negative output at the drain the FET could not be turned off. In order to use the amplifier with both polarities the feedback resistor arrangement used in the test set-up on sheet 3 was necessary. Maximum drain to source voltage would be one half the maximum amplifier output (approx. 7VDC).

4. When the amplifier output (drain voltage) was more positive than the source, the switching action was very fast due to the biasing polarities. However, when the amplifier output was negative the turn-off point was over a wide range of emitter light, again due to the biasing. The less light on the FET the higher the gain; the higher the gain the more negative the drain to source bias. Until the amplifier output limits, it is impossible to turn it off.

5. Through the linear operating region of the FET switch the input impedance of the gate is so high that much noise is injected into the amplifier. Therefore, it is evident that the FET should only be used as a switch and not a feedback resistor by itself.

# SECTION 4

# TEST FIXTURE FOR OPTOELECTRONIC DEVICE EVALUATION

# SECTION 4

## TEST FIXTURE FOR OPTOELECTRONIC DEVICE EVALUATION

The following figures show the test fixture for holding and aligning the optoelectronic devices used in the laboratory investigations.

The first figure shows the fixture with an emitter and sensor ready for test. The sensor bracket is adjusted to a registration mark and locked. Then the emitter bracket is moved up until the emitter and sensor touch. Then the sensor bracket can be moved back in 1/16 inch increments.

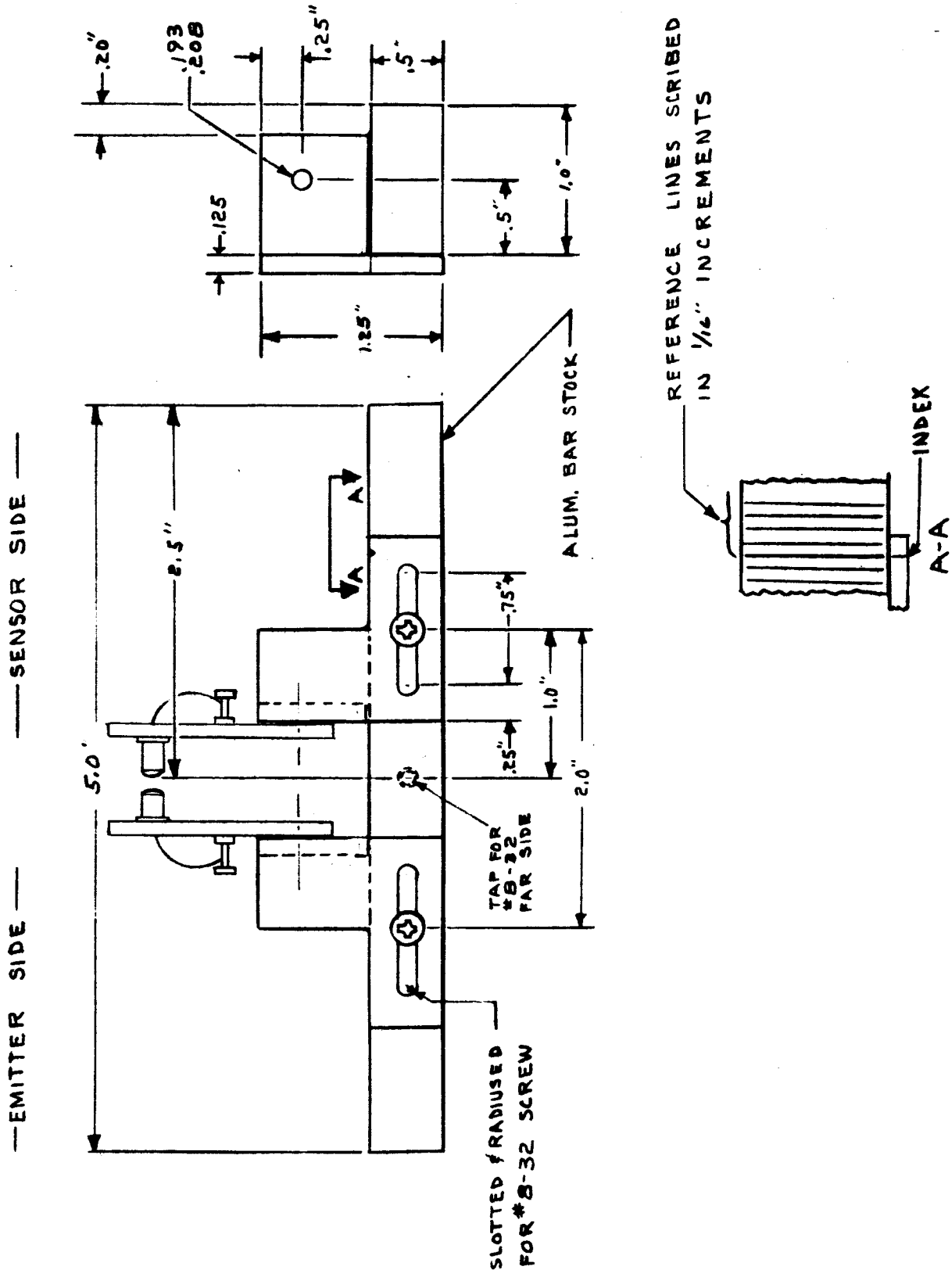


| | INITIALS | DATE | REV BY INITIALS | DATE | TITLE | MODEL |
|---|---|---|---|---|---|---|
| CALC | R.J.I. | 21 Jan 6 | | | | |
| CHECK | | | | | | |
| APPD. | | | | | | |
| APPD. | | | | | | |

U3 4038 8000 REV. 10-64

REV LTR_____

BOEING NO. D5-13268-3

SH. A-139

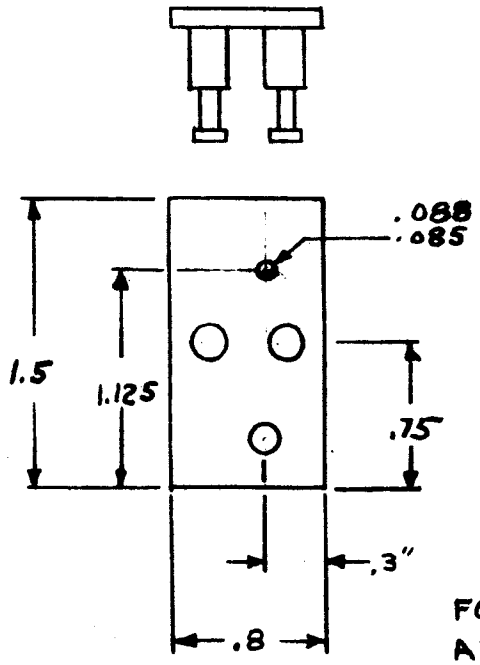


FOR 1N2175
AND L12-3 & L12-12

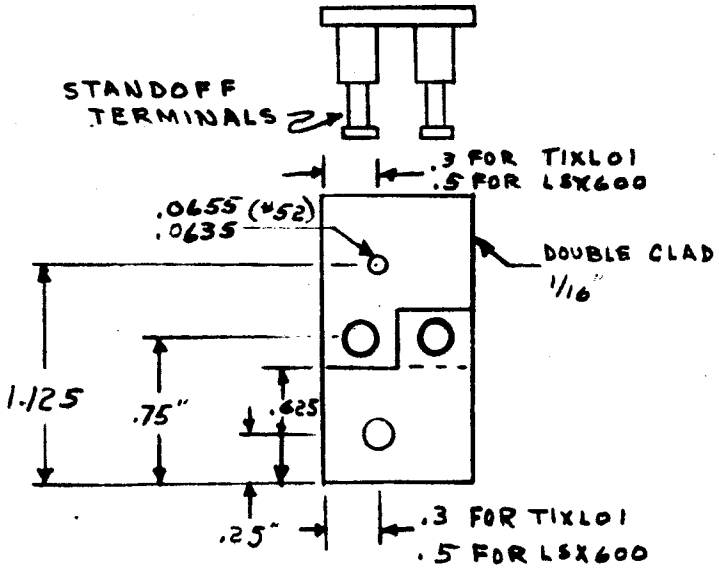


FOR LS-600 (1)
AND TIX-L01 (2)

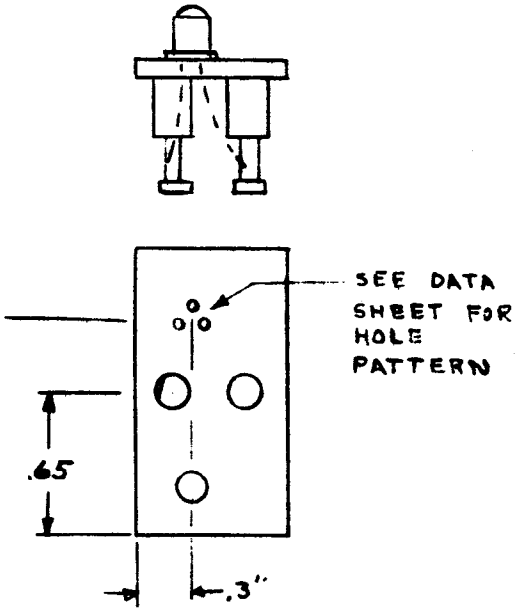


FOR TIX L02
AND LED-11

OPTDELECTRONIC DEVICE MOUNTING BRACKETS
MADE OF COPPER CLAD EPOXY

| | INITIALS | DATE | REV BY INITIALS | DATE | TITLE | MODEL |
|---|---|---|---|---|---|---|
| CALC | RJZ. | 21 Jan 6 | | | | |
| CHECK | | | | | | |
| APPD. | | | | | | |
| APPD. | | | | | | |

U3 4038 8000 REV. 10-64

REV LTR

BOEING NO. D5-13268-3
SH. A-140

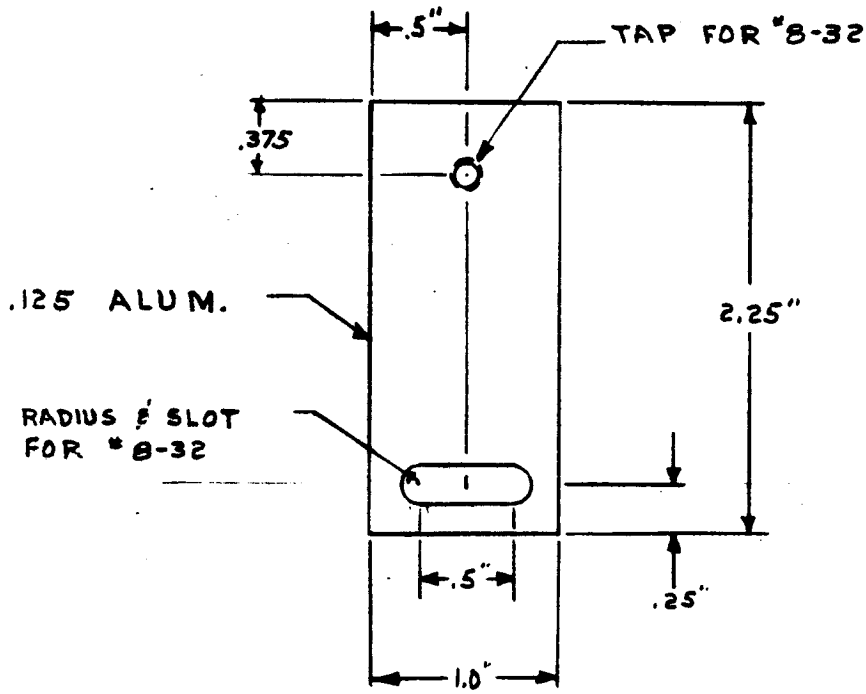


HOLDING BRACKET FOR ACRYLIC PLASTIC LIGHT PIPE

| | INITIALS | DATE | REV BY INITIALS | DATE | TITLE | MODEL |
|---|---|---|---|---|---|---|
| CALC | RJZ | 21 Jan 6 | | | | |
| CHECK | | | | | | |
| APPD. | | | | | | |
| APPD. | | | | | | |

U3 4038 8000 REV. 10-64

REV LTR

BOEING NO. D5-13268-3

SH. A-141

# SECTION 5

# HALL EFFECT AND MAGNETORESISTOR SENSORS

# APPENDIX A

## SECTION 5

## HALL EFFECT AND MAGNETORESISTOR SENSORS

The data in Section 5 is provided in support of the Hall Effect and Magnetoresistor Sensor Experiment described in Section 3.2, Volume II of this report.

Product Data Bulletin 310.13
*AMERICAN AEROSPACE CONTROLS, INC.*
A Subsidiary of Univis, Inc.

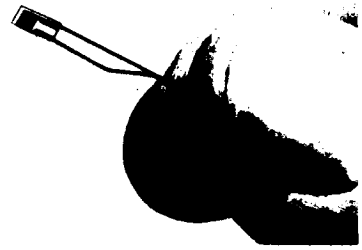

# MISTOR™

## TYPE MR-A

. . . a new series of solid-state, thin-film magnetic flux-sensitive resistors that change resistance directly as a function of applied magnetic flux density, and capable of performing a wide variety of electronic circuit control, computer and transducer functions.

Because these elements can operate over an extremely wide temperature range (absolute zero to +100C), they are particularly useful for magnetic flux measurements associated with superconducting magnets at liquid helium temperatures. The smaller elements can be used as probes for mapping magnetic fields.

Other MistoR electronic applications include AC to DC converters, modulators, rectifiers, contactless potentiometers, magnetometers, wave shape generators, oscillators, flip-flops, galvanomagnetic amplifiers, multipliers and dividers.

The elements are generally linear, respond to changes in magnetic field above a megacycle and are virtually noiseless (Johnson noise limited).

MistoR Type MR-A construction consists of a high-mobility metal sandwiched between Mylar insulation, with two copper terminals extending from one end.

**MAGNETORESISTOR CHARACTERISTIC AT 25°C**

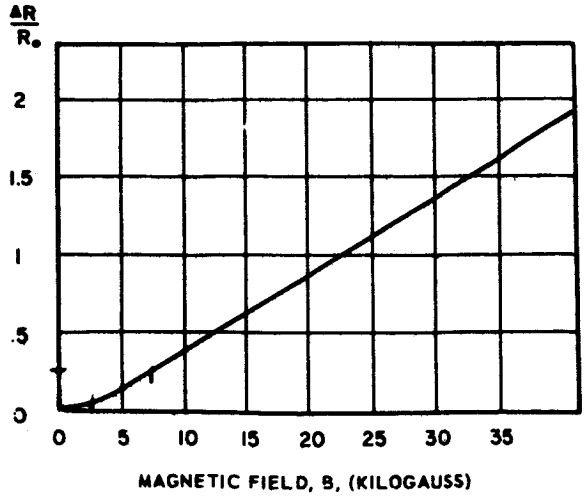


**MAGNETORESISTIVE SENSITIVITY VS TEMPERATURE**

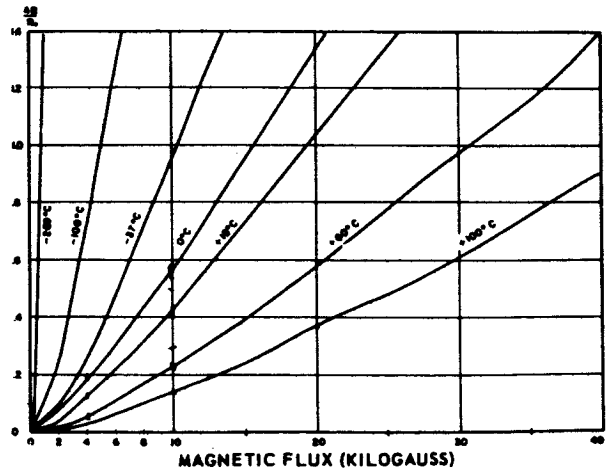

# MISTOR TYPE MR-A

*Magnetoresistance is the physical property of certain conductive materials – rare metals, intermetallic compounds and semiconductors – that causes the electrical resistance of these materials to change in proportion to the intensity of an applied magnetic field. The source of the magnetic field can be either a permanent magnet or a simple electromagnet. A magnetoresistor's control function is analogous to a photo-resistive cell that responds to changes in the intensity of applied light.*

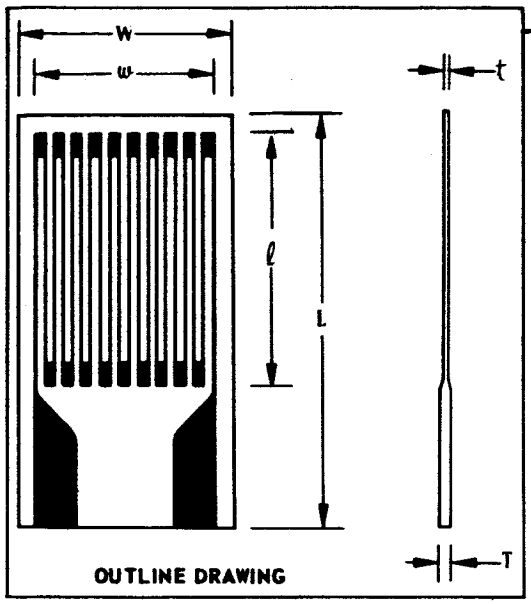


OUTLINE DRAWING

| MR-A MODEL NO. | POWER RATING, WATTS | |
|---|---|---|
| | Still Air | Heat Sinked Bet. Iron Pole Pieces |
| 11 | .004 | 0.1 |
| 12 | .015 | 0.4 |
| 13 | .040 | 1.5 |
| 14 | .150 | 5.0 |

*Power Rating – 25°C Rise above Room Temperature

## DIMENSIONS, INCHES

| MR-A MODEL NO. | OVERALL DIMENSIONS | | | FLUX-SENSITIVE AREA DIMENSIONS | | |
|---|---|---|---|---|---|---|
| | L ±1/32 | W ±1/32 | T | ℓ ±1/64 | w ±1/64 | t |
| 11 | 3/16 | 3/32 | .006 | 1/16 | 1/16 | .004 |
| 12 | 5/16 | 5/32 | | 1/8 | 1/8 | |
| 13 | 5/8 | 5/16 | | 1/4 | 1/4 | |
| 14 | 1-1/4 | 5/8 | | 1/2 | 1/2 | |

## MAGNETORESISTIVE SENSITIVITY AT LIQUID HELIUM TEMPERATURE (4.2°K)

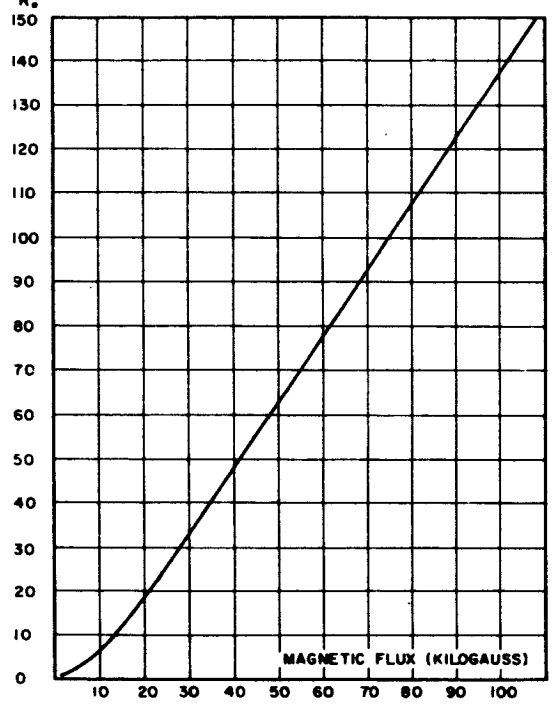


## ELECTRICAL SPECIFICATIONS

| | |
|---|---|
| Magnetic Field Density (B), Range | Beyond 80,000 gauss |
| Operating Temperature, range | –273 C to +100 C |
| Temperature Coeff of Resistance (MistoR resistance increases with temperature) | +0.4% per deg. C |
| Linearity | Approx. 1% above 2000 gauss |

American Aerospace Controls, Inc., reserves the right to make changes in these specifications without notice as part of our continuing program of product improvement.

## ZERO FLUX RESISTANCE VALUES

| MR-A MODEL NO. | NOMINAL ZERO FLUX RESISTANCE VALUES, OHMS, ±20% TOL. | | | | | | | | | | | | | | | | | | |
|---|---|---|---|---|---|---|---|---|---|---|---|---|---|---|---|---|---|---|---|
| | 1 | 10 | 50 | 100 | 150 | 200 | 250 | 300 | 400 | 500 | 700 | 1000 | 2000 | 3000 | 4000 | 5000 | 6000 | 7000 | 10,000 |
| 11 (Special) | ● | ● | ● | ● | ● | ● | ● | | | | | | | | | | | | |
| 12 (Standard) | | | | ● | | ● | | ● | ● | ● | ● | ● | | | | | | | |
| 13 ( Standard) | | | | | | | | | | ● | | ● | ● | ● | ● | ● | ● | | |
| 14 (Special) | | | | | | | | | | | | ● | ● | ● | ● | ● | | ● | ● |

**AMERICAN AEROSPACE CONTROLS, INC.**
A SUBSIDIARY OF UNIVIS, INC.
123 MILBAR BLVD. • FARMINGDALE, N.Y. • PHONE: 516 MY4-5100

**AMERICAN AEROSPACE CONTROLS, INC.**

# MAGNETIC FLUX SENSITIVE RESISTOR
# HIGH SENSITIVITY TYPE

Bulletin
TN 105

Type MRI Magnetic Flux Sensitive Resistors are new circuit components whose resistance varies in proportion to an applied magnetic field. Their high sensitivity to flux changes provides exceptional application versatility, and makes these units a flexible tool for many electronic sensing, measurement and control applications.

MRI Magnetic Flux Sensitive Resistors can be used with either permanent or electromagnetic fields. Typical applications include flux measuring instruments, modulators, multipliers, current sensors, gain control and switching functions, position sensors, and contactless potentiometers. Their micro-second response to rapidly changing magnetic fields permits their use in place of photo resistive cells, thereby eliminating problems of frequency response and bulb life.

**CHARACTERISTIC CURVE**
**(at 22 Deg. C)**

0-3 KG: Square Law Curve

Above 3 KG: Linear Curve

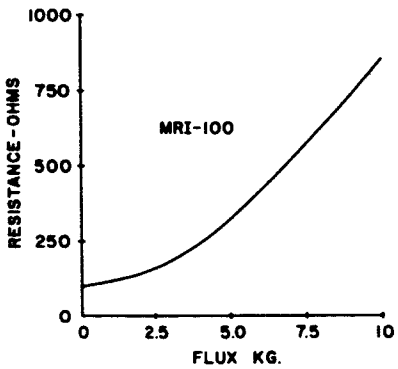


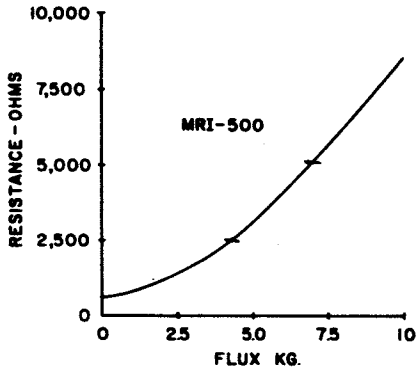


**OUTLINE DIMENSIONS**

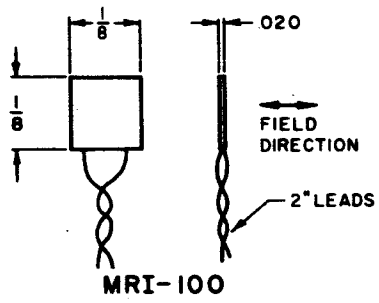


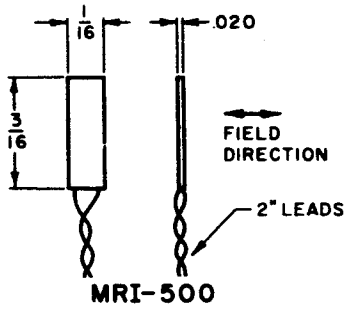


| PRELIMINARY SPECIFICATIONS | | TYPE MRI – 100 | TYPE MRI – 500 |
|---|---|---|---|
| Nominal Resistance $R_o$ | | 100 ohms ±10% | 500 ohms ±20% |
| Magnetic Flux Sensitivity $\Delta R/R_o$ | Flux<br>3 KG<br>10 KG | <br>1.9<br>7 – 10 | <br>3.0 – 3.2<br>13 – 18 |
| Temperature Coefficient %/Deg. C | 0 KG<br>3 KG<br>10 KG | -0.12<br>-0.35<br>-0.50 | -1.80<br>-2.70<br>-2.90 |
| Power Rating. Temp. rise Deg. C/Watt | Ambient Air<br>Heat Sinked | 900<br>70 | 1000<br>100 |
| Response | | >1 megacycle | >1 megacycle |
| Operating Temp. Deg. C. | | -60 to +95 | -60 to +95 |

**AMERICAN AEROSPACE CONTROLS, INC.**

129 VERDI STREET • FARMINGDALE, N. Y. • PHONE: 516 MY 4-5100

# BELL HALL-PAK

## Hall Effect Devices

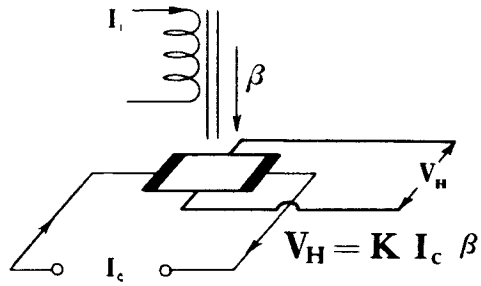


**This schematic representation illustrates both the measuring and multiplying capabilities of the HALL-PAK. By holding $I_c$ constant, $V_H$ becomes a direct function of $\beta$, the magnetic flux density. If both $I_c$ and $\beta$ are variable, $V_H$ is proportional to the product of the two functions. Holding $I_f$ and $I_c$ constant, $V_H$ becomes a function of the angle between $\beta$ and the plane of the HALL-PAK element.**

**The devices listed below are standard and available from stock. Devices for your special application can be designed to your specifications.**

| ELECTRICAL SPECIFICATIONS: | BH-200 | BH-201 | BH-202 | BH-203 | BH-204 | BH-205 | BH-206 | BH-207 | BH-208 |
|---|---|---|---|---|---|---|---|---|---|
| Rated control current, $I_c$ | 150 ma | 100 ma | 100 ma | 100 ma | 100 ma | 125 ma | 200 ma | 150 ma | 100 ma |
| Maximum continuous control current, $I_{cm}$ (in 25°C static air) | 250 ma | 150 ma | 150 ma | 250 ma | 150 ma | 200 ma | 250 ma | 250 ma | 150 ma |
| Open circuit Hall voltage, $V_{HOC}$ (at rated $I_c$, B = 10 Kg) | 150 mv ± 25% | 120 mv ± 25% | 100 mv ± 25% | 100 mv ± 25% | 110 mv ± 25% | 130 mv ± 25% | 550 mv ± 25% | 160 mv ± 25% | 100 mv ± 25% |
| Resistive null voltage, $V_{RO}$ (B = O, $I_c$ = 100 ma) | 100 μv max | 250 μv max | 100 μv max | 100 μv max | 200 μv max | 100 μv max | 500 μv max | 200 μv max | 250 μv max |
| Inductive null constant, A (see Note) | .003 cm²* | .01 cm²* | .002 cm²* | .003 cm²* | .002 cm²* | .002 cm²* | .006 cm²* | .002 cm²* | .02 cm²* |
| Hall output load resistance, $R_{lin}$ (for optimum linearity 0 to 10 kg) | 5 Ω* | 7 Ω* | 5 Ω* | 5 Ω* | 7 Ω* | 6 Ω* | ----- | 7 Ω* | 5 Ω* |
| Linearity error with $R_{lin}$ termination (0 to 10 kg) | 1% max | 1.5% max | 1% max | 1% max | 1.5% max | 1% max | ----- | 1.5% max | 1.5% max |
| Open circuit sensitivity constant, $K_{HOC}$ (B = 10 kg) | .1v/amp kg ± 25% | .12v/amp kg ±25% | .1v/amp kg ± 25% | .1v/amp kg ± 25% | .11v/amp kg ± 25% | .1v/amp kg ± 25% | .3v/amp kg ± 25% | .11v/amp kg ± 25% | .10v/amp kg ± 25% |
| Sensitivity constant, $K_{lin}$ (with $R_{lin}$ termination) | .75 $K_{HOC}$* | .75 $K_{HOC}$* | .65 $K_{HOC}$* | .75 $K_{HOC}$* | .65 $K_{HOC}$* | .75 $K_{HOC}$* | ----- | .75 $K_{HOC}$* | .75 $K_{HOC}$* |
| Input resistance, $R_{in}$ (including leads) | 1.5 Ω* | 2.3 Ω* | 2.6 Ω* | 1.9 Ω* | 2.7 Ω* | 2.1 Ω* | 5 Ω* | 2 Ω* | 2.7 Ω* |
| Output resistance, $R_{out}$ (including leads) | 1.0 Ω* | 1.8 Ω* | 1.8 Ω* | 1.3 Ω* | 1.9 Ω* | 1.4 Ω* | 3.5 Ω* | 1.5 Ω* | 1.9 Ω* |
| Mean temperature coefficient of $V_{HOC}$ (−40°C to +100°C) | −0.08%/°C* | −0.08%/°C* | −.08%/°C* | −0.08%/°C* | −0.08%/°C* | −0.08%/°C* | −.15%/°C* | −0.08%/°C* | −0.08%/°C* |
| Mean temperature coefficient of resistance (−40°C to +100°C) | 0.15%/°C* | 0.15%/°C* | 0.15%/°C* | 0.15%/°C* | 0.15%/°C* | 0.15%/°C* | .15%/°C* | .15%/°C* | .15%/°C* |
| Reversibility error of $V_{HOC}$ (0 to 10 kg) | 1% max | ----- | 1% max | 1% max | 1% max | 1% max | ----- | 1% max | 1.5% max |
| Resistive null voltage drift vs temperature ($I_c$ = 100 ma) | 1uv/°C max | ----- | ----- | 1uv/°C max | ----- | ----- | ----- | ----- | ----- |
| Storage temperature range | −40°C to +105°C | −20°C to +85°C | −40°C to +105°C | −40°C to +105°C | −40°C to +105°C | −40°C to +105°C | −40°C to +105°C | −40°C to +105°C | −40°C to +105°C |
| Operating temperature range (at rated $I_c$) | −40°C to +100°C | −20°C to +80°C | −40°C to +100°C | −40°C to +100°C | −40°C to +100°C | −40°C to +100°C | −40°C to +100°C | −40°C to +100°C | −40°C to +105°C |

* APPROXIMATE

OTE: In a time varying field the voltage induced into the Hall output leads, $V_{ind}$, is proportional to the effective area, A, of the Hall output loop and the amplitude and rate of change of the field.

$$V_{ind}\ (\text{measured with } I_c = 0) = A \frac{dB}{dt} \times 10^{-8}$$

$V_{ind}$ = volts, A = cm², B = gauss, t = sec.

ELECTRONIC DESIGN
DEVELOPMENT • MANUFACTURING

BELL INC.
1356 NORTON AVE.
COLUMBUS 12, OHIO
PHONE AX 4-4908

# BELL HALL-PAKS

## MECHANICAL SPECIFICATIONS:

NOTES:

1. Hall voltage ($V_H$) output leads, red and neutral.
   Control current ($I_c$) input leads, green and neutral.
2. Leads are solid copper with heavy polyurethane insulation.
3. Dimensions in inches.

### MODEL BH200: GENERAL-PURPOSE TRANSVERSE

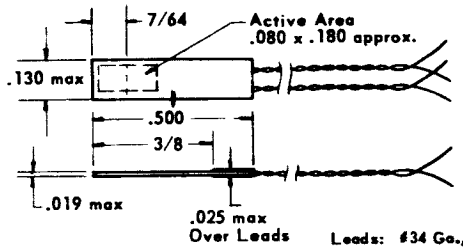


Leads: #34 Ga., 7½" long

### MODEL BH201: ULTRA-THIN TRANSVERSE

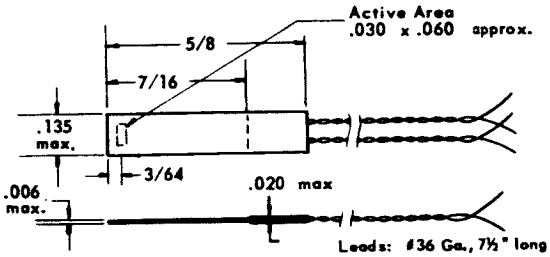


Leads: #36 Ga., 7½" long

### MODEL BH202: SMALL AXIAL

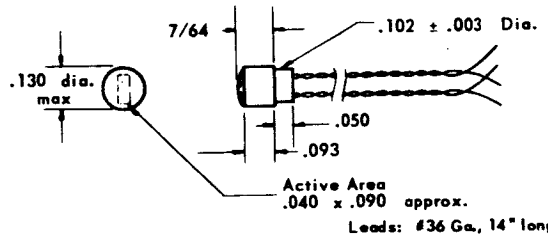


Leads: #36 Ga., 14" long

### MODEL BH203: GENERAL-PURPOSE AXIAL

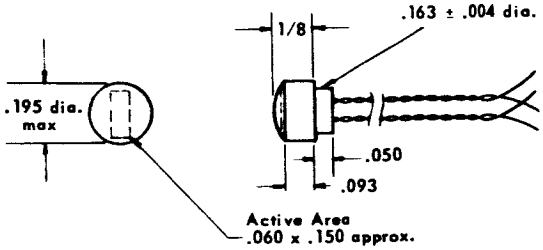


Leads: #34 Ga., 14" long

### MODEL BH204: MIDGET AXIAL

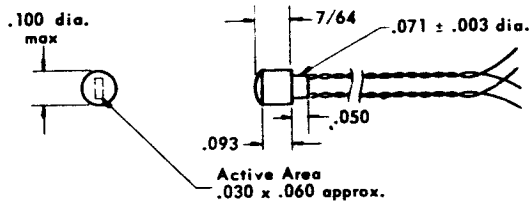


Leads: #36 Ga., 14" long

### MODEL BH205: MIDGET TRANSVERSE

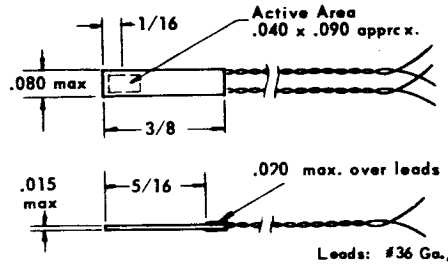


Leads: #36 Ga., 7½" long

### MODEL BH206: HIGH-SENSITIVITY, LOW-COST TRANSVERSE

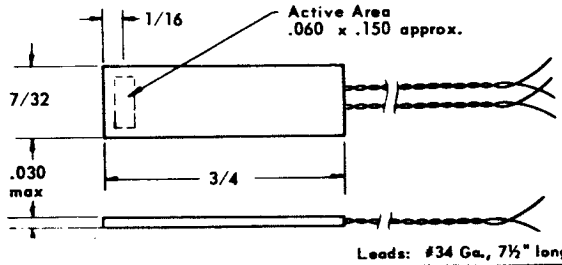


Leads: #34 Ga., 7½" long

### MODEL BH207: HIGH-RESOLUTION TANGENTIAL

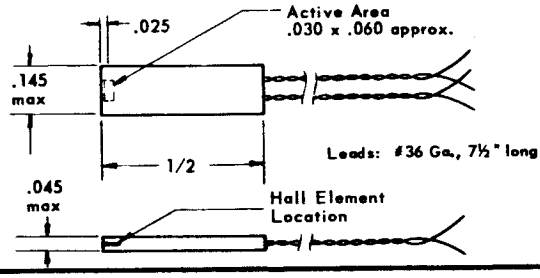


Leads: #36 Ga., 7½" long

### MODEL BH208: ULTRA MIDGET AXIAL

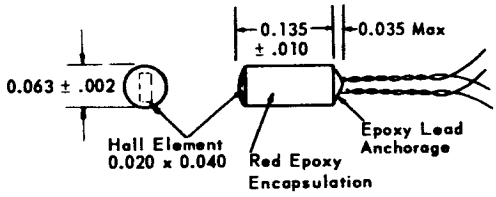


Leads: #36 Ga., 14" long.

BELL INC.
ELECTRONIC DESIGN
DEVELOPMENT • MANUFACTURING
1356 NORTON AVE.
COLUMBUS 12, OHIO
PHONE AX 4-4906

HP/Rev. 9-63/5M

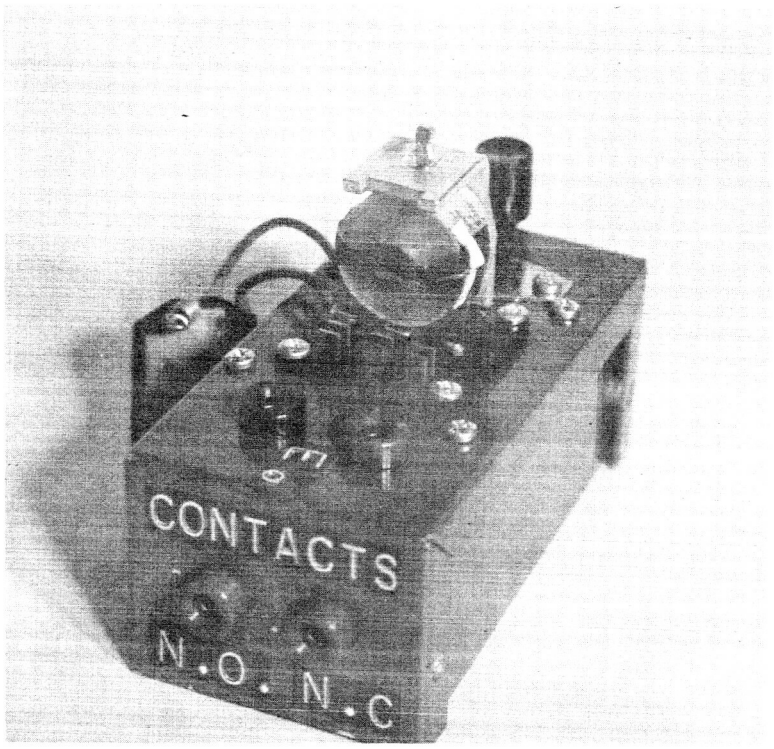


GENERAL PURPOSE RELAY MONITORING DEVICE
(PROBE, MAGNETO RESISTOR MR-A12)

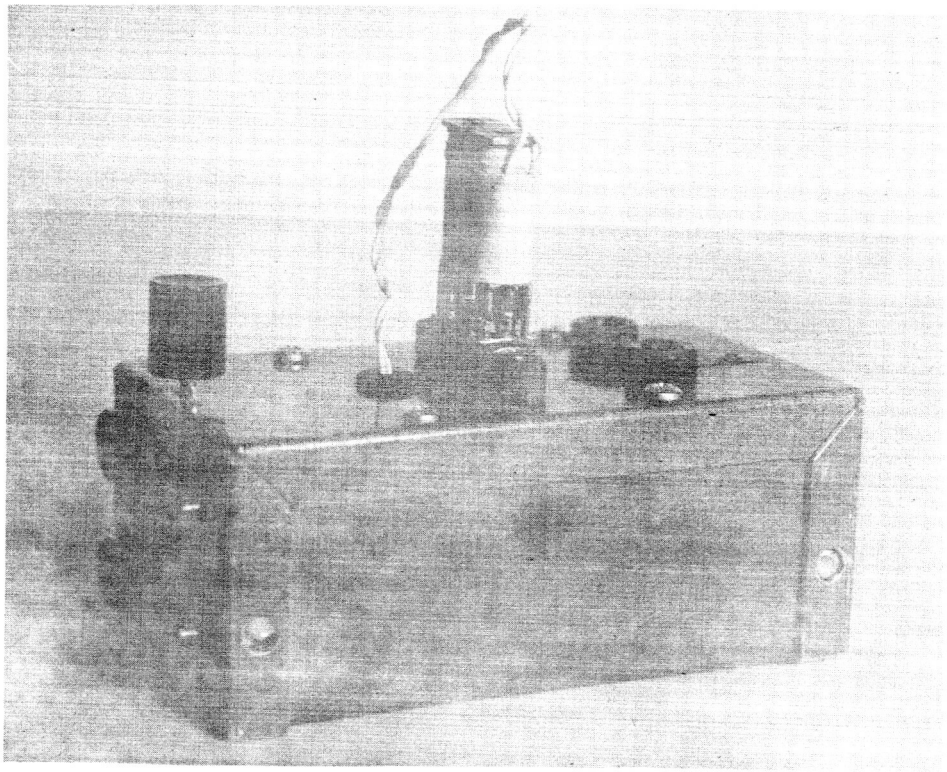

CURRENT SENSITIVE RELAY MONITORING DEVICE
(PROBE, MAGNETORESISTOR MRI - 500)

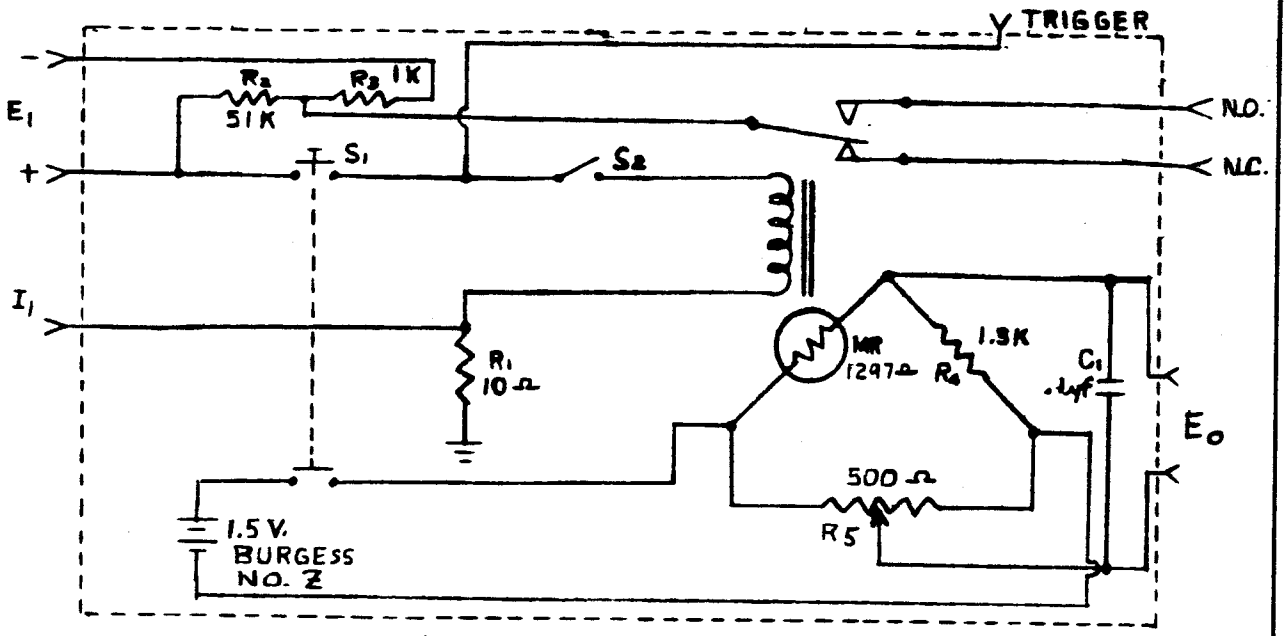


GENERAL PURPOSE RELAY

MR - TYPE MR-A, AMERICAN AEROSPACE CONTROLS, INC.

RELAY - MOD. GPR TAX 72T, OHMITE MFG. CO.

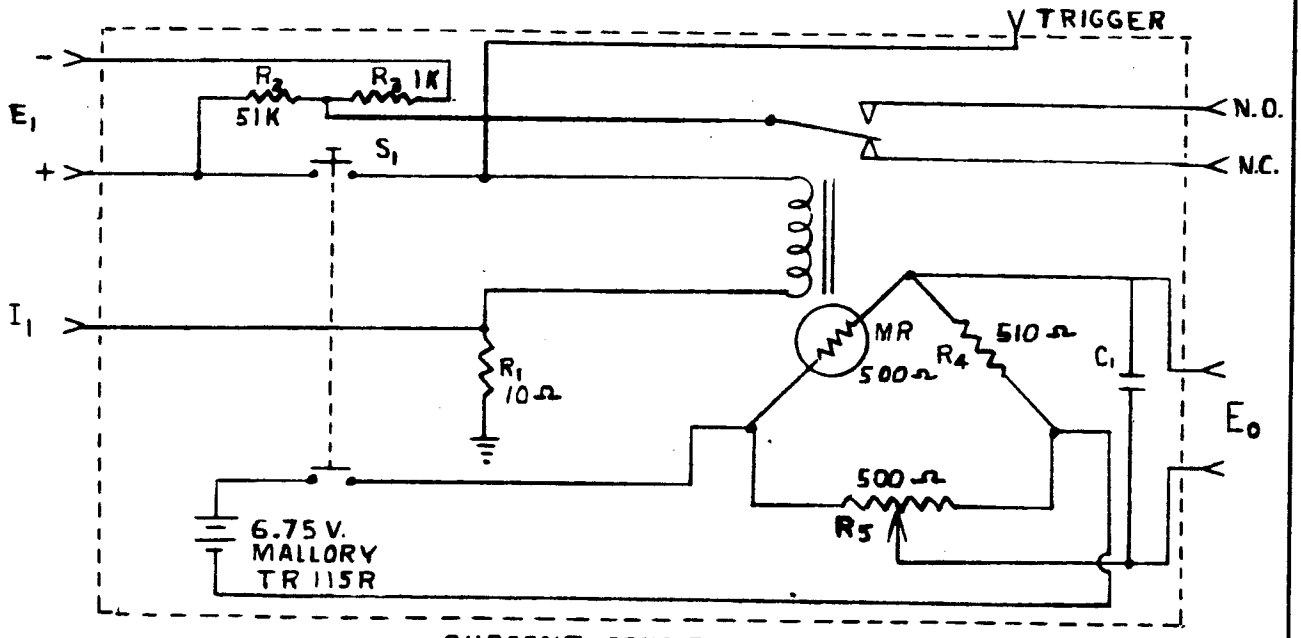


CURRENT SENSITIVE RELAY

MR - TYPE MRI-500, AMERICAN AEROSPACE CONTROLS, INC.

RELAY - 2BC-1630-4, HI-G INC.

| | INITIALS | DATE | REV BY INITIALS | DATE | TITLE | MODEL |
|---|---|---|---|---|---|---|
| CALC | DZK | 4-6-66 | | | SCHEMATIC - RELAY MONITORING DEVICES | |
| CHECK | | | | | | |
| APPD. | | | | | | |
| APPD. | | | | | | |

U3 4038 8000 REV. 10-64

REV LTR

BOEING NO. D5-13268-3

SH. A-150

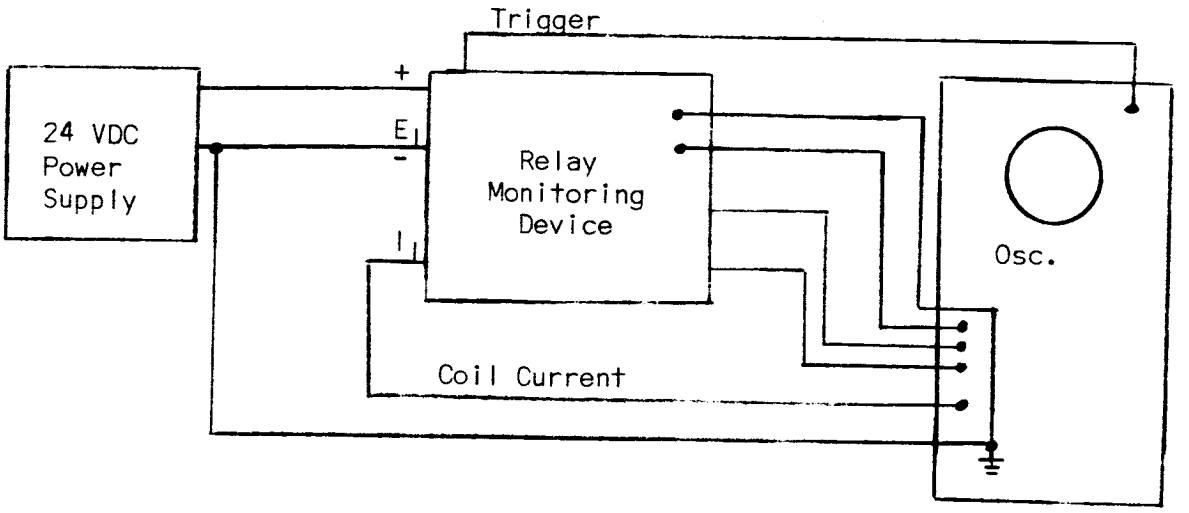


Test Set Up

Power Supply
24 VDC 5A
Trygon M36-5 or Equiv.

Oscilloscope
Tektronix 545
Type M Plug In or equivalent

## Operating Instructions

The relay monitoring devices (General Purpose Relay Monitoring Device and Current Sensitive Relay Monitoring Device) are designed to monitor the magnetic circuit with a magnetoresistor bridge circuit providing the $E_O$ output for display on an oscilloscope. In addition, provisions are made to monitor the coil current and the break before make electrical contacts. The relay monitoring device is connected to the power supply and oscilloscope as illustrated above. When actuated, the spring loaded push button switch supplies the proper voltage to the sensing circuit and the relay coil. The bridge circuit may require balancing due to component drift, etc. To determine if the bridge circuit requires balancing; disconnect $E_I$ and press the pushbutton switch, $E_O$ should read 0 volts, if not, adjust the BAL. potentiometer until $E_O$ = 0 volts. The General Purpose Relay Monitoring Device can be balanced with $E_I$ applied if the slide switch is placed in the off position.

| | INITIALS | DATE | REV BY INITIALS | DATE | TITLE | MODEL |
|---|---|---|---|---|---|---|
| CALC | | | | | Test Set Up and Operating Instructions - Relay Monitoring Device | |
| CHECK | | | | | | |
| APPD. | | | | | | |
| APPD. | | | | | | |

U3 4038 8000 REV. 10-64

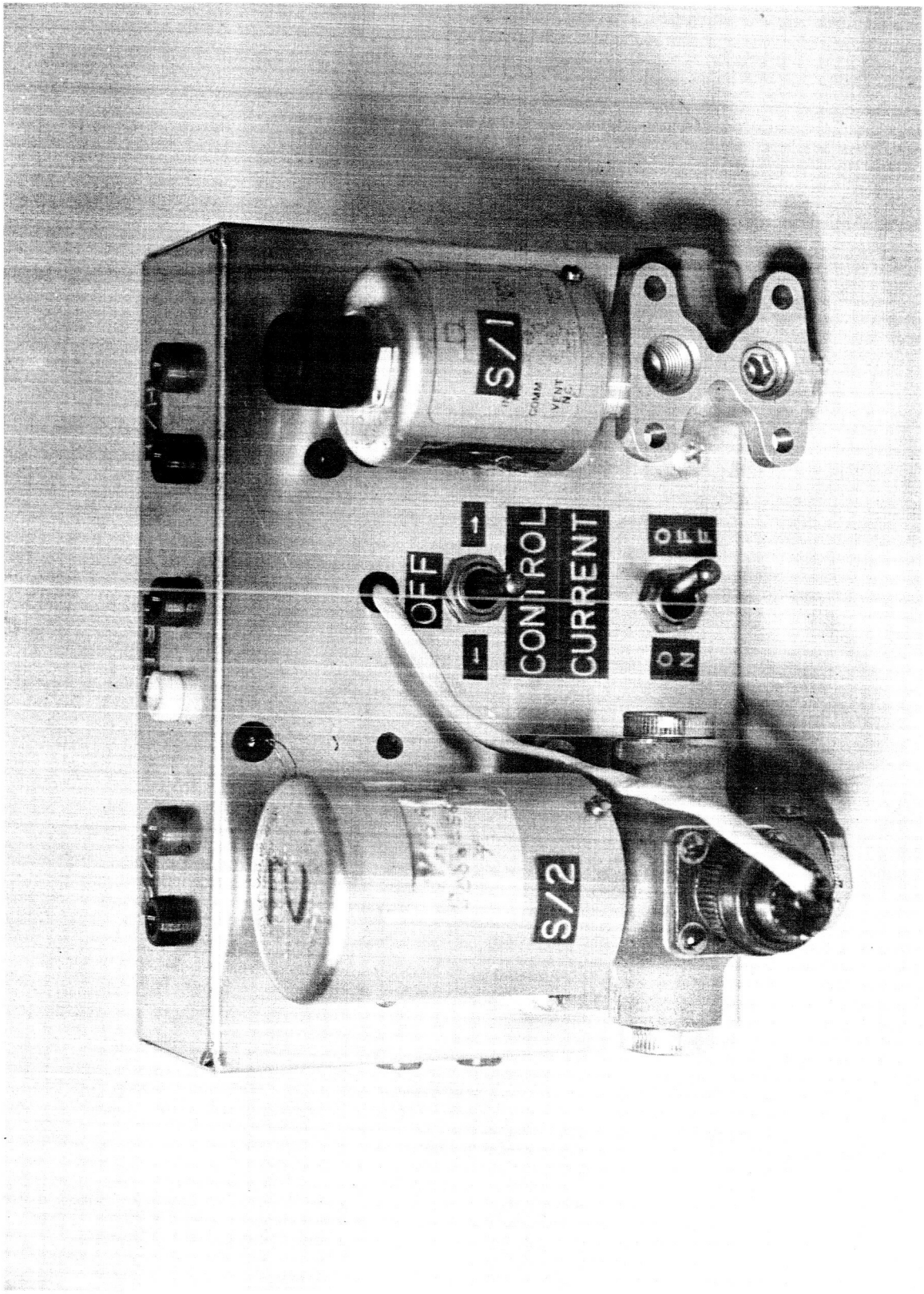


SOLENOID VALVE MONITORING DEVICE

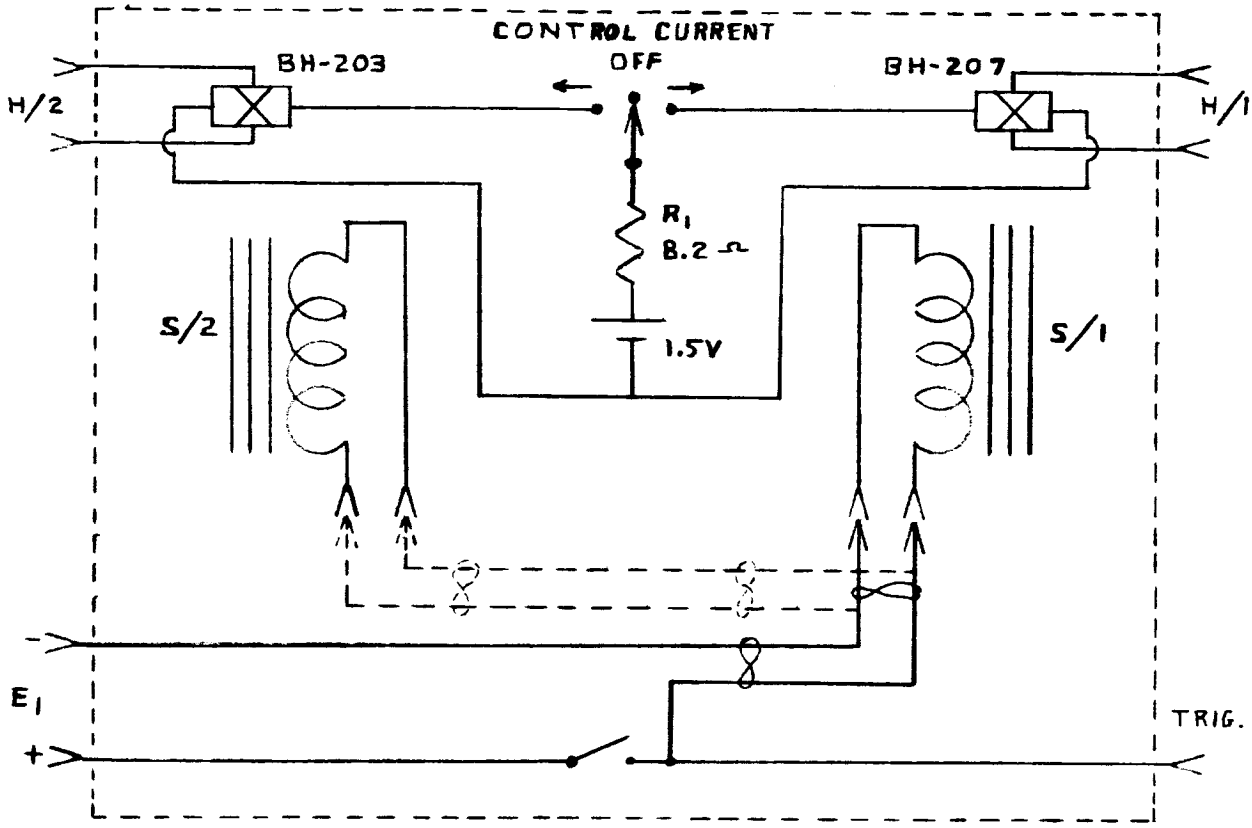


BH-203, GENERAL PURPOSE AXIAL, F.W. BELL, INC.

BH-207, HIGH RESOLUTION TANGENTIAL, F.W. BELL, INC.

S/2 MV 76, MAROTTA VALVE CORP.

S/1 MV 74 MM, MAROTTA VALVE CORP.

| | INITIALS | DATE | REV BY INITIALS | DATE | TITLE | MODEL |
|---|---|---|---|---|---|---|
| CALC | | | | | SCHEMATIC-SOLENOID MONITORING DEVICE | |
| CHECK | | | | | | |
| APPD. | | | | | | |
| APPD. | | | | | | |

U3 4038 8000 REV. 10-64

REV LTR

BOEING NO. D5-13268-3

SH. A-153

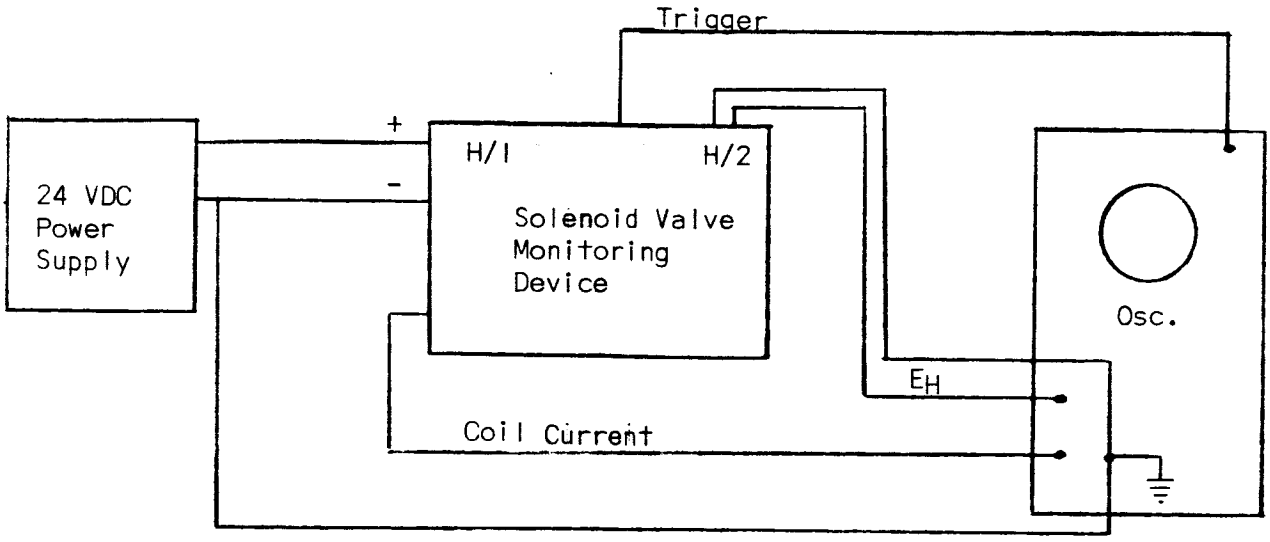


Test Set Up

Power Supply
24 VDC 5A
Trygon M36-5 or Equiv.

Oscilloscope
Tektronix 545
Type D Plug In or Equivalent

Operating Instructions

The solenoid to be tested is connected to the short cable coming out of the test device chassis. Control current for the Hall probe located in the solenoid is supplied by positioning the Control Current Switch in the direction of the desired solenoid. NOTE: Place the Control Current Switch to the OFF position when the device is not being used to conserve the control current battery.

Attach the power supply and oscilloscope as illustrated above. Switching the ON - OFF switch to the ON position energizes the solenoid, at which time the Hall voltage or coil current waveforms can be observed on the oscilloscope.

| | INITIALS | DATE | REV BY INITIALS | DATE | TITLE | MODEL |
|---|---|---|---|---|---|---|
| CALC | | | | | Test Set Up and Operating Instructions - Solenoid Valve Monitoring Device | |
| CHECK | | | | | | |
| APPD. | | | | | | |
| APPD. | | | | | | |

U3 4038 8000 REV. 10-64

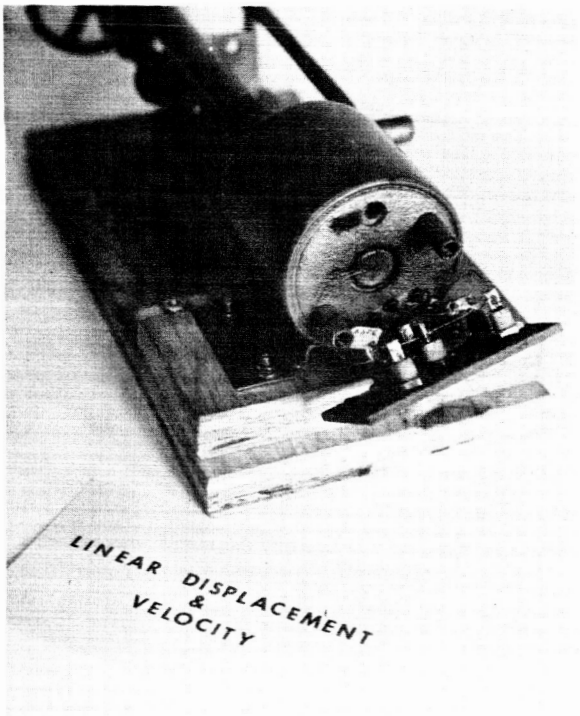


SOLENOID MONITORING WITH AXIAL PROBE

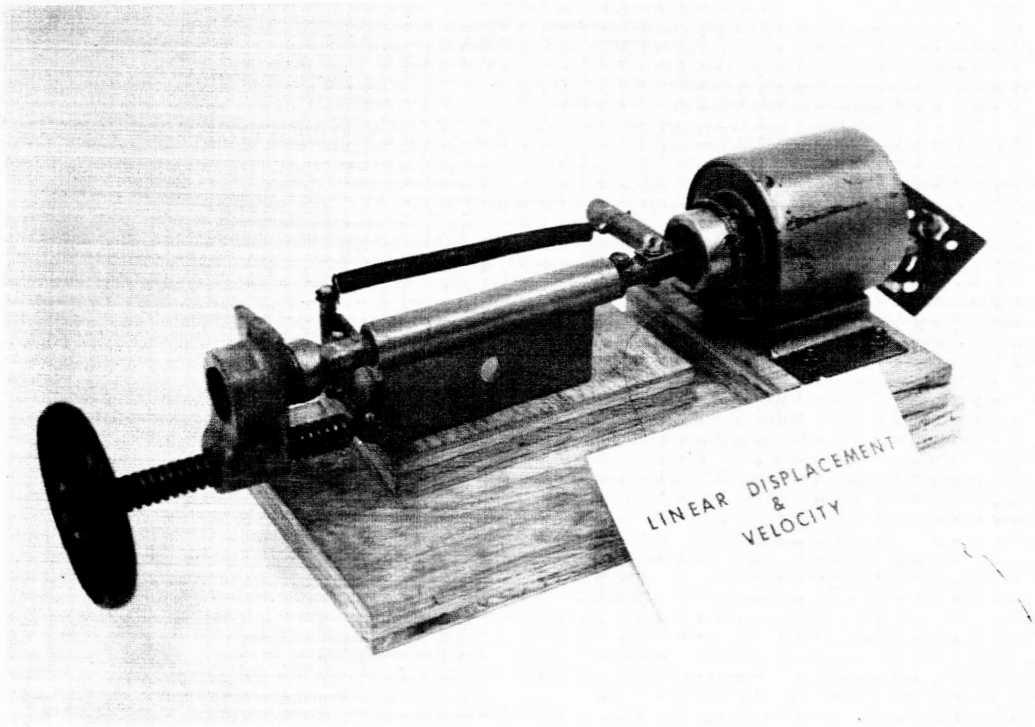


TANGENTIAL PROBE LOCATED IN ANULAR SPACE ABOUT THE SOLENOID PLUNGER BUICK STARTER SOLENOID MONITORING DEVICE

DATA SHEET 1-1

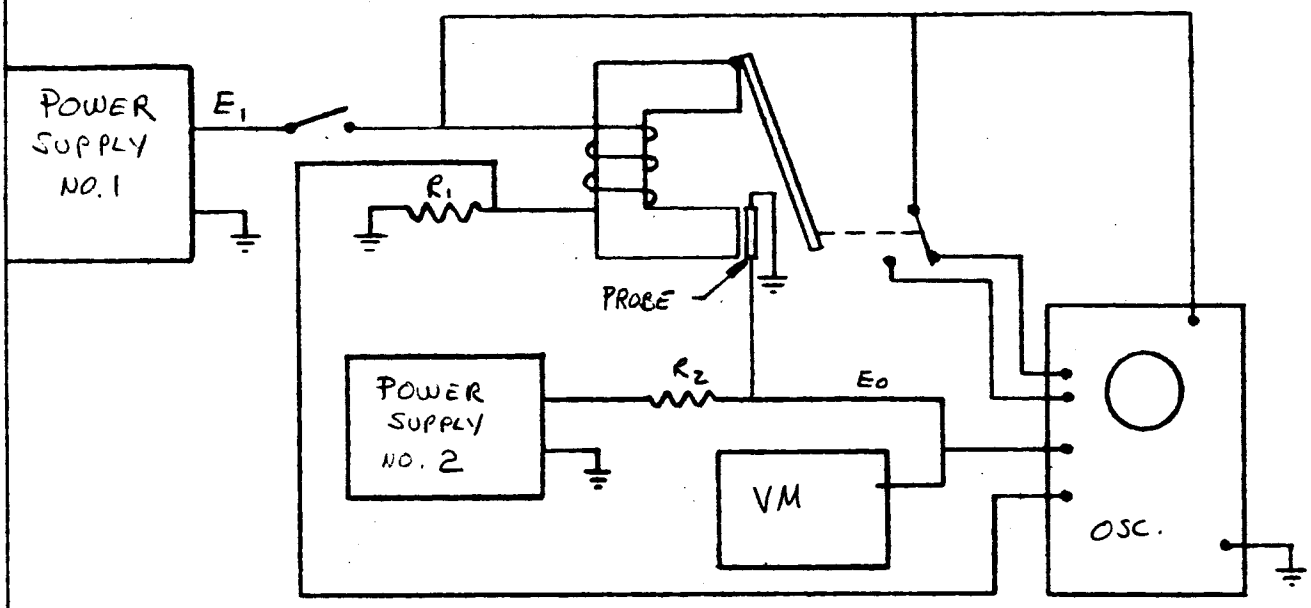


PS NO. 1 TRYGON M36-5

PS NO. 2 TRYGON M36-15A

VM FLUKE MODEL 801

OSC. TEKTRONIX 545

$R_1$ ≈ 10 Ω

$R_2$ 1K

PROBE MR-A12 1297Ω

$E_1$ 24.5V

$E_0$

RELAY GPR TAX 72T OHMITE

| d (in.) | $E_0$ (mv) |
|---|---|
| 0.027 | 24 |
| 0.024 | 26 |
| 0.021 | 32 |
| 0.018 | 36 |
| 0.015 | 42 |
| 0.012 | 47 |
| 0.009 | 53 |
| 0.006 | 60 |
| 0.003 | 61 |
| 0.000 | 60 |

| | INITIALS | DATE | REV BY INITIALS | DATE | TITLE | MODEL |
|---|---|---|---|---|---|---|
| CALC | [illegible] | 2-23-64 | | | GENERAL PURPOSE RELAY DISPLACEMENT MONITORING WITH MAGNETORESISTOR VOLTAGE DIVIDER CIRCUIT | |
| CHECK | | | | | | |
| APPD. | | | | | | |
| APPD. | | | | | | |

U3 4038 8000 REV 10-64

REV LTR

BOEING NO D5-13268-3

SH A-156

DATA SHEET 1-2

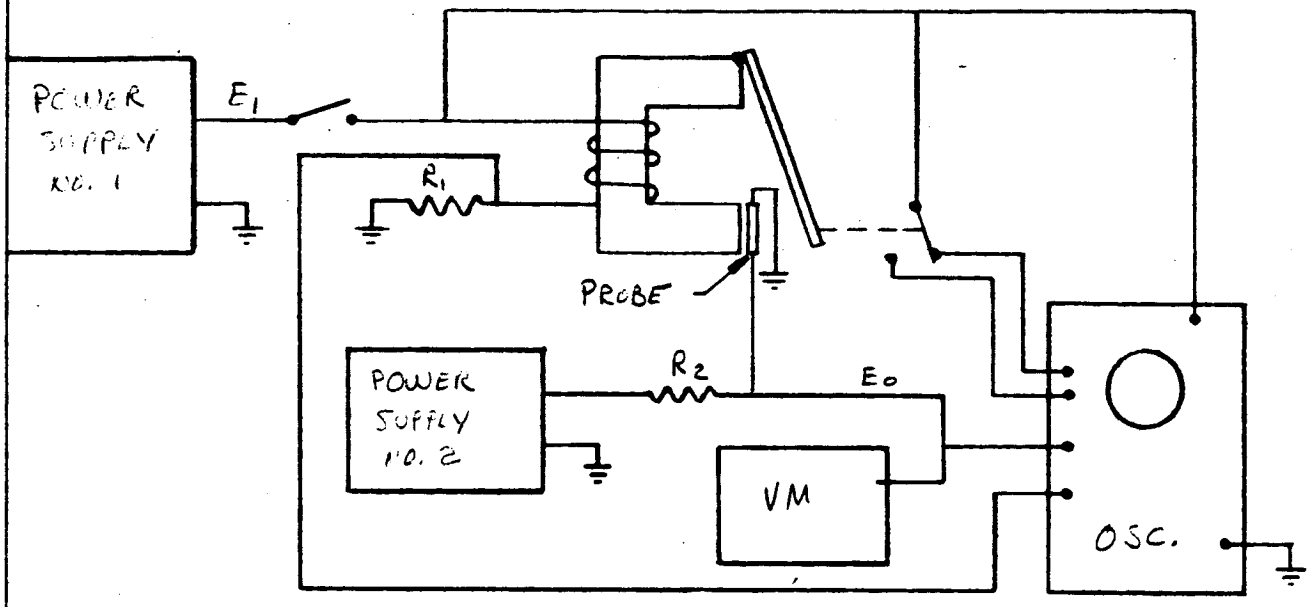


| | |
|---|---|
| PS No 1 | TRYGON M36-5 |
| PS No 2 | TRYGON M36-15A |
| VM | FLUKE MODEL 801 |
| [illegible] | TEKTRONIX 545 |
| $R_1$ | 10 Ω |
| $R_2$ | 1K |
| Probe | MR-[illegible] 1297-2 |
| $E_1$ | 24.5V |
| $E_o$ | |
| Relay | [illegible] OPK TAY 7ET |

| d (in.) | $E_o$ (MV) |
|---|---|
| 0.027 | – |
| 0.024 | 26 |
| 0.021 | 28 |
| 0.018 | 30 |
| 0.015 | 41 |
| 0.012 | 48 |
| 0.009 | 54 |
| 0.006 | 60 |
| 0.003 | 66 |
| 0.000 | 66 |

| | INITIALS | DATE | REV BY INITIALS | DATE | TITLE | MODEL |
|---|---|---|---|---|---|---|
| CALC | [illegible] | [illegible] | | | [illegible] RELAY DISPLACEMENT MONITORING WITH MAGNETORESISTOR VOLTAGE DIVIDER CIRCUIT | |
| CHECK | | | | | | |
| APPD. | | | | | | |
| APPD | | | | | | |

03 4039 8000 REV 10 64

REV LTR

BOEING NO D5-13268-3

SH A-157

DATA SHEET 1-3

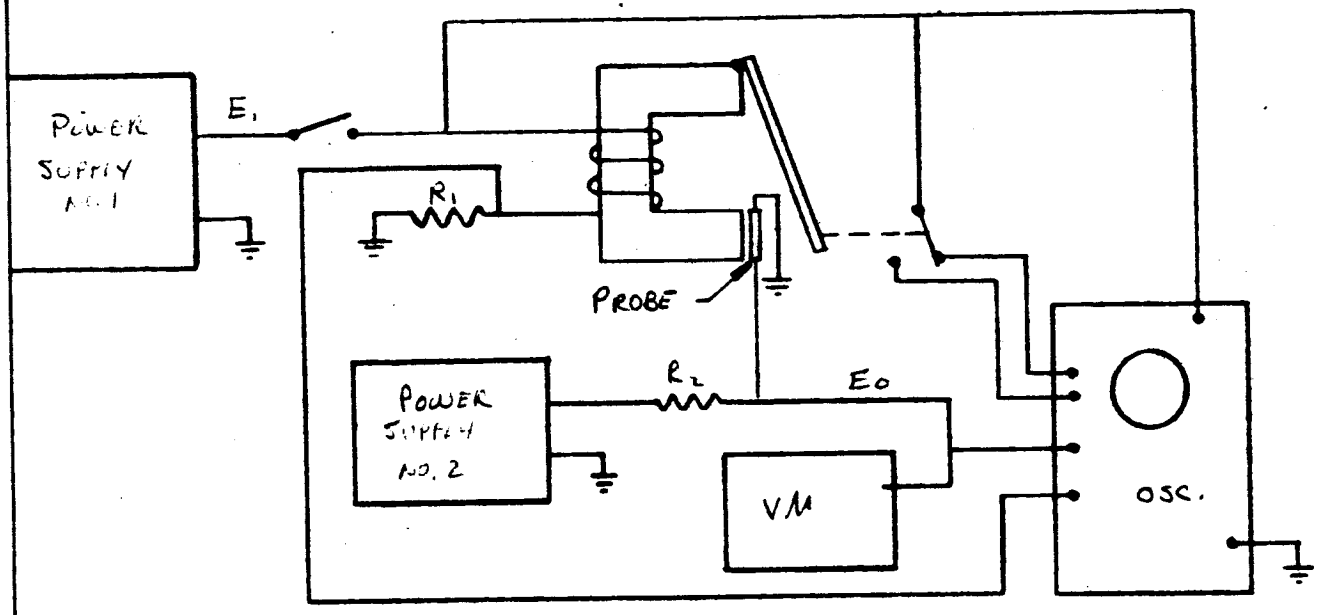


PS No. 1 TRYGON M36-5

PS No. 2 TRYGON M36-15A

VM FLUKE MODEL 801

OSC TEKTRONIX 545

$R_1$ 10 Ω

$R_2$ 1K

PROBE MR-A12 12037.02

$E_1$ 24.5V

$E_o$

RELAY OHMITE GPR TAX 72T

| d (in) | $E_o$ (mv) |
|---|---|
| 0.027 | |
| 0.024 | 25 |
| 0.021 | 26 |
| 0.018 | 29 |
| 0.015 | 33 |
| 0.012 | 36 |
| 0.009 | 43 |
| 0.006 | 54 |
| 0.003 | 65 |
| 0.000 | 64 |

| | INITIALS | DATE | REV BY INITIALS | DATE | TITLE | MODEL |
|---|---|---|---|---|---|---|
| CALC | PZK | 2-22-66 | | | GENERAL PURPOSE RELAY DISPLACEMENT MONITORING WITH MAGNETOMETER VOLTAGE DIVIDER CIRCUIT | |
| CHECK | | | | | | |
| APPD. | | | | | | |
| APPD. | | | | | | |

U3 4039 8000 REV 10 64

REV LTR

BOEING NO D5-13268-3

SH A-158

DATA SHEET 2-1

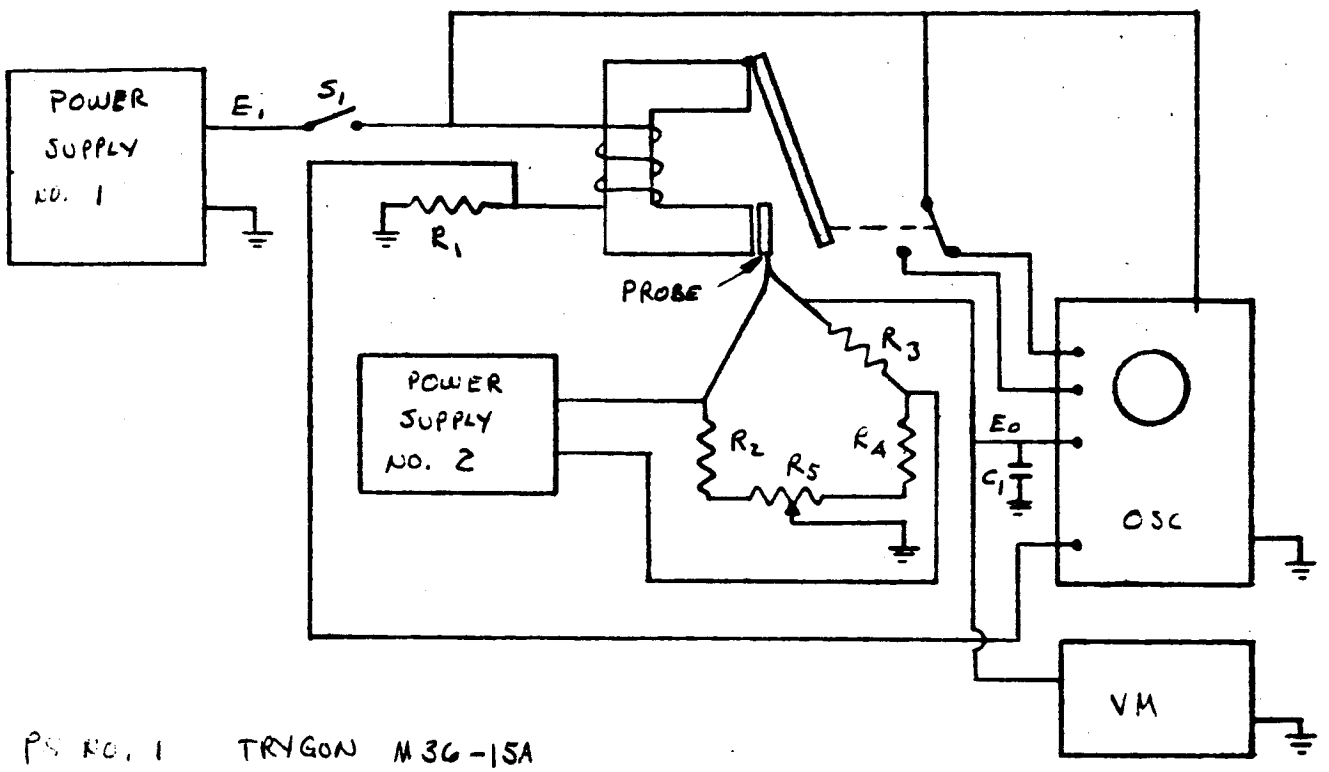


| | |
|---|---|
| PS NO. 1 | TRYGON M36-15A |
| PS NO. 2 | TRYGON M36-10A |
| OSC. | TEKTRONIX 555 |
| VM | HP 412A |
| $R_1$ | |
| $R_2$ | 1K |
| $R_3$ | 1.3K |
| $R_4$ | 1K |
| $R_5$ | 500 Ω |
| PROBE | MR-A12 1297 Ω |
| $E_1$ | 24V |
| $C_1$ | 0.01 μf |
| RELAY | CLIMITE GPR TAX 72T |

| d (in.) | $E_0$ (mv) |
|---|---|
| 0.024 | 36 |
| 0.021 | 42 |
| 0.018 | 50 |
| 0.015 | 58 |
| 0.012 | 66 |
| 0.009 | 72 |
| 0.006 | 76 |
| 0.003 | 78 |
| 0.000 | 77 |

| | INITIALS | DATE | REV BY INITIALS | DATE | TITLE | MODEL |
|---|---|---|---|---|---|---|
| CALC | DRK | 2-17-66 | | | GENERAL PURPOSE RELAY DISPLACEMENT MONITORING WITH MAGNETORESISTOR BRIDGE CIRCUIT | |
| CHECK | | | | | | |
| APPD. | | | | | | |
| APPD. | | | | | | |

U3 4038 8000 REV 10 64

REV LTR

DATA SHEET 2-2

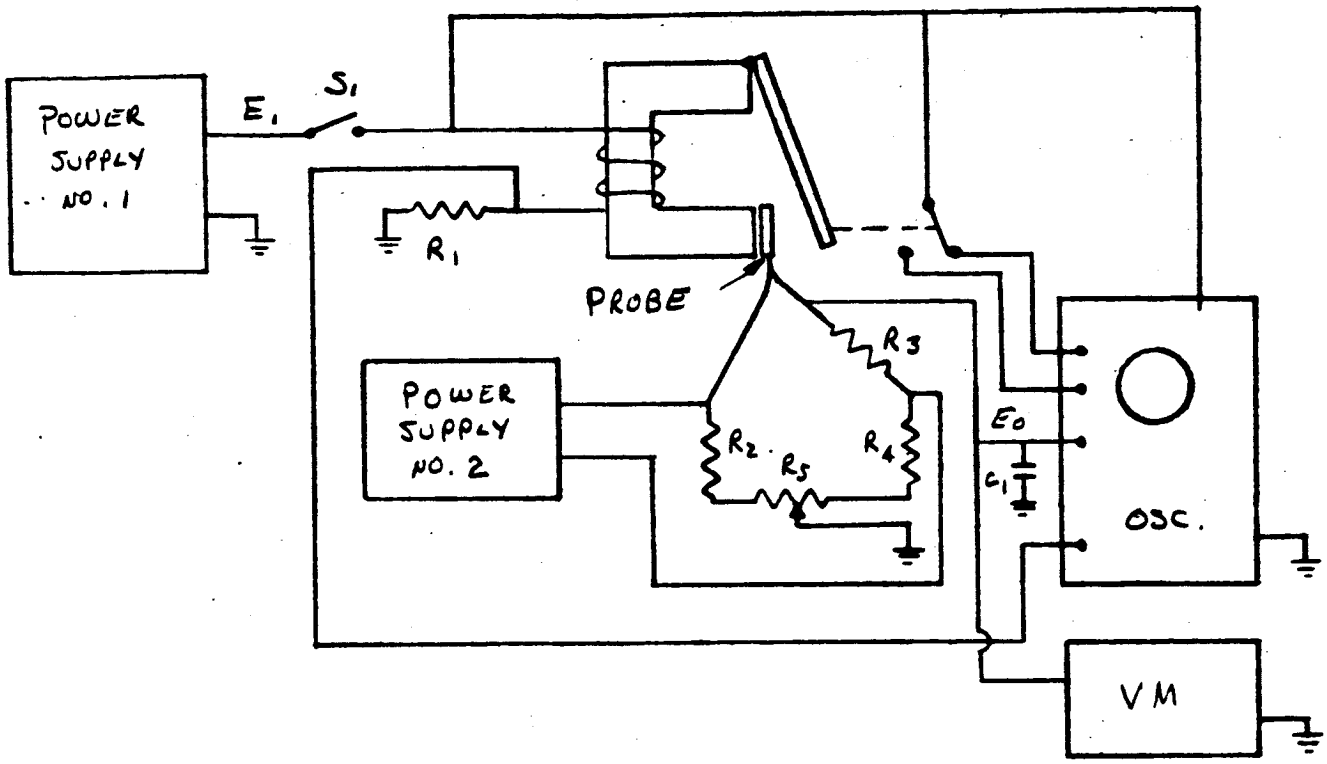


PS NO. 1 TRYGON M36-15A

PS NO 2 TRYGON M36-10A

OSC TEKTRONIX 545, M PLUG-IN

VM HP 412A

$R_1$

$R_2$ 1K

$R_3$ 1.3K

$R_4$ 1K

$R_5$ 500Ω

PROBE MR-A12 1297Ω

$E_1$ 24V

$C_1$ 0.01μf

RELAY OHMITE GPR TAX 72T

| d (in) | $E_0$ (mv) |
|---|---|
| 0.024 | 32 |
| 0.021 | 35 |
| 0.018 | 42 |
| 0.015 | 46 |
| 0.012 | 56 |
| 0.009 | 60 |
| 0.006 | 71 |
| 0.003 | 74 |
| 0.000 | 73 |

| | INITIALS | DATE | REV BY INITIALS | DATE | TITLE | MODEL |
|---|---|---|---|---|---|---|
| CALC | D2K | 2-17-66 | | | GENERAL PURPOSE RELAY DISPLACEMENT MONITORING WITH MAGNETO RESISTER BRIDGE CIRCUIT | |
| CHECK | | | | | | |
| APPD. | | | | | | |
| APPD | | | | | | |

U3 4038 8000 REV 10 64

REV LTR

BOEING NO D5-13268-3

SH A-160

DATA SHEET 2-3

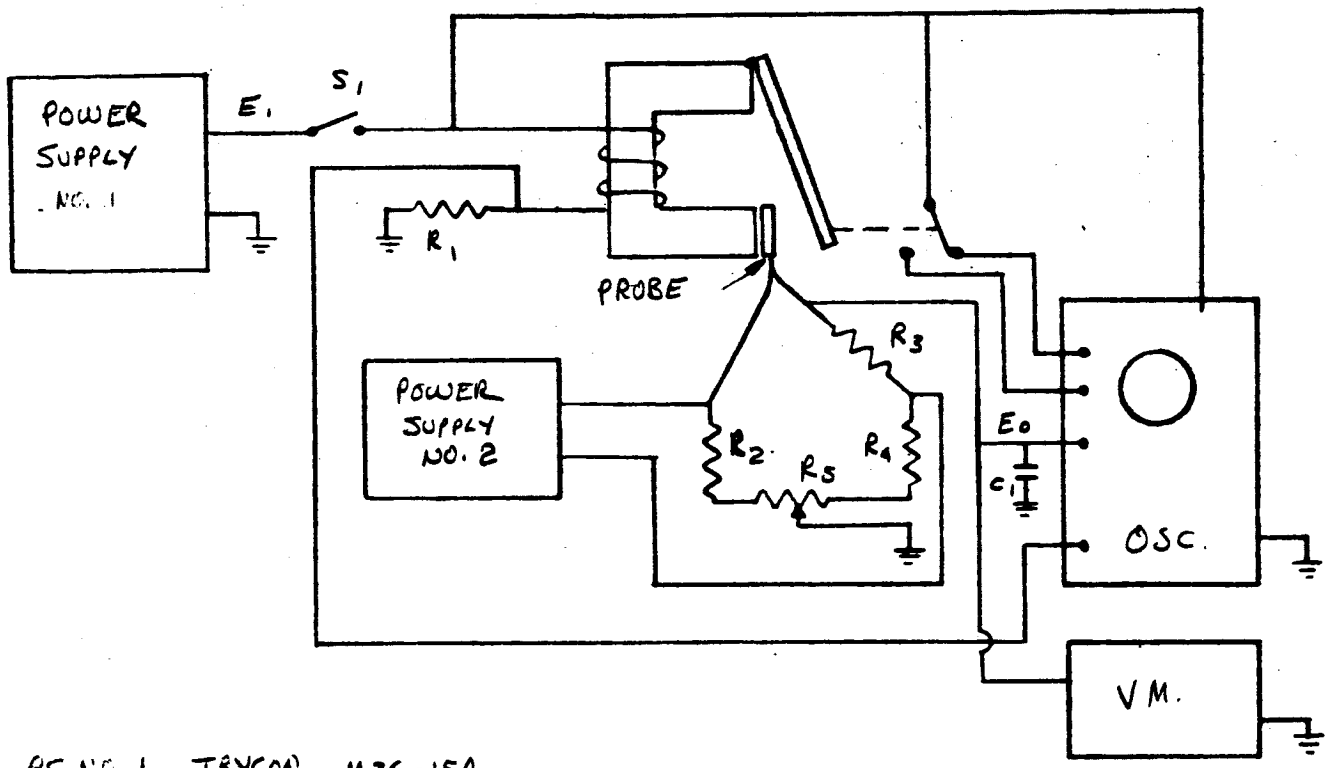


PS NO 1 TRYGON M36-15A

PS NO. 2 TRYGON M36-10A

OSC TEKTRONIX 545

VM HP 412A

$R_1$

$R_2$ 1K

$R_3$ 1.3K

$R_4$ 1K

$R_5$ 500 Ω

PROBE MR-A12 12972

$E_1$ 24V

$C_1$ 0.01μf

RELAY OHMITE CAR TAX 72T

| d (in.) | Eo (mv) |
|---|---|
| 0.024 | 27 |
| 0.021 | 30 |
| 0.018 | 40 |
| 0.015 | 46 |
| 0.012 | 53 |
| 0.009 | 59 |
| 0.006 | 68 |
| 0.003 | 70 |
| 0.000 | 69 |

| | INITIALS | DATE | REV BY INITIALS | DATE | TITLE | MODEL |
|---|---|---|---|---|---|---|
| CALC | [illegible] | 2-17-66 | | | GENERAL PURPOSE RELAY DISPLACEMENT MONITORING WITH MAGNETO RESISTOR BRIDGE CIRCUIT | |
| CHECK | | | | | | |
| APPD. | | | | | | |
| APPD | | | | | | |

U3 4038 8000 REV 10-64

REV LTR

BOEING NO D5-13268-3

SH A-161

DATA SHEET 2-4

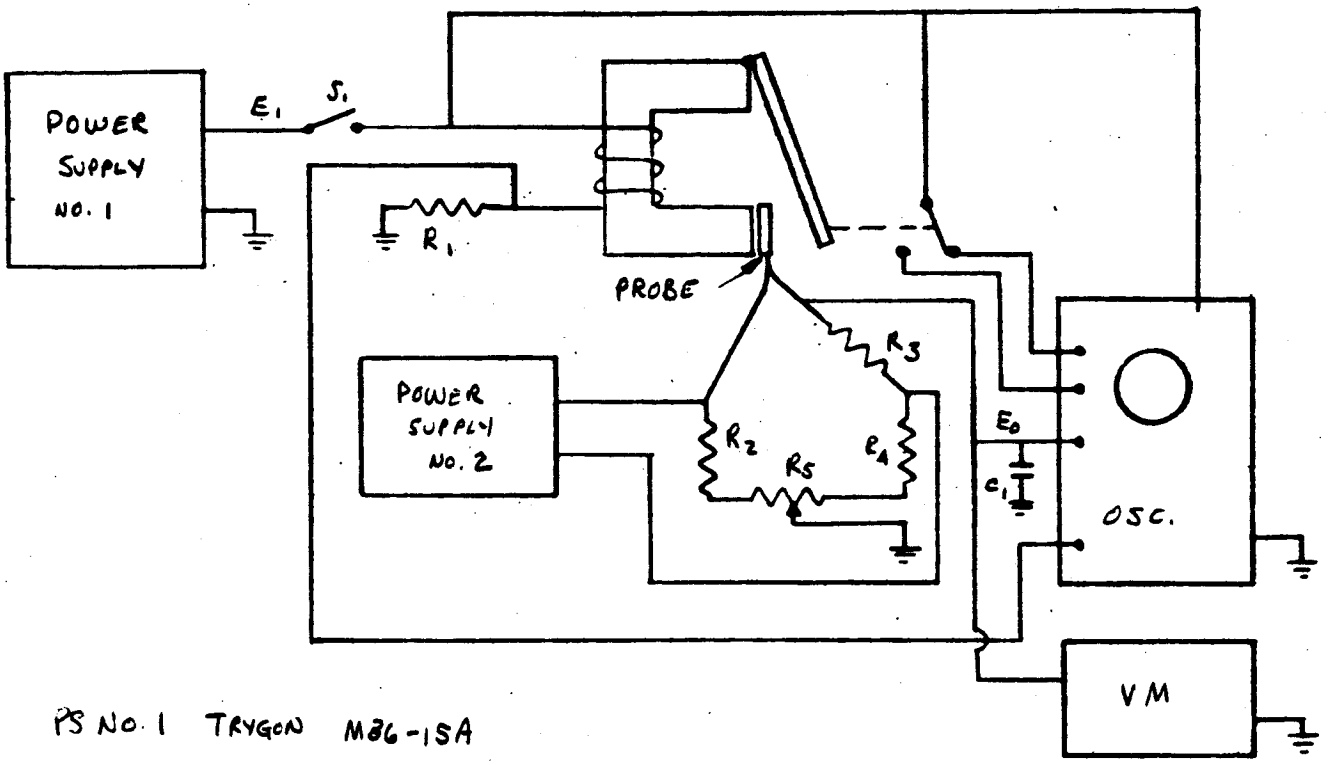


PS NO. 1 TRYGON M36-15A

PS NO. 2 TRYGON M36-10A

OSC. TEKTRONIX 545

VM HP 412A

$R_1$

$R_2$ 1K

$R_3$ 1.3K

$R_4$ 1K

$R_5$ 500 Ω

PROBE MR-A12 1297 Ω

$E_1$ 24V

$C_1$ 0.01 μf

RELAY OHMITE GPR TAX 72T

| d (in) | $E_0$ (mv) |
|---|---|
| 0.024 | 31 |
| 0.021 | 34 |
| 0.018 | 39 |
| 0.015 | 45 |
| 0.012 | 52 |
| 0.009 | 60 |
| 0.006 | 66 |
| 0.003 | 68 |
| 0.000 | 67 |

| | INITIALS | DATE | REV BY INITIALS | DATE | TITLE | MODEL |
|---|---|---|---|---|---|---|
| CALC | BZK | 2-17-66 | | | GENERAL PURPOSE RELAY DISPLACEMENT MONITORING WITH MAGNETORESISTOR BRIDGE CIRCUIT | |
| CHECK | | | | | | |
| APPD. | | | | | | |
| APPD | | | | | | |

L3 4038 8000 REV 10-64

REV LTR

BOEING NO D5-13268-3

SH A-162

DATA SHEET 3

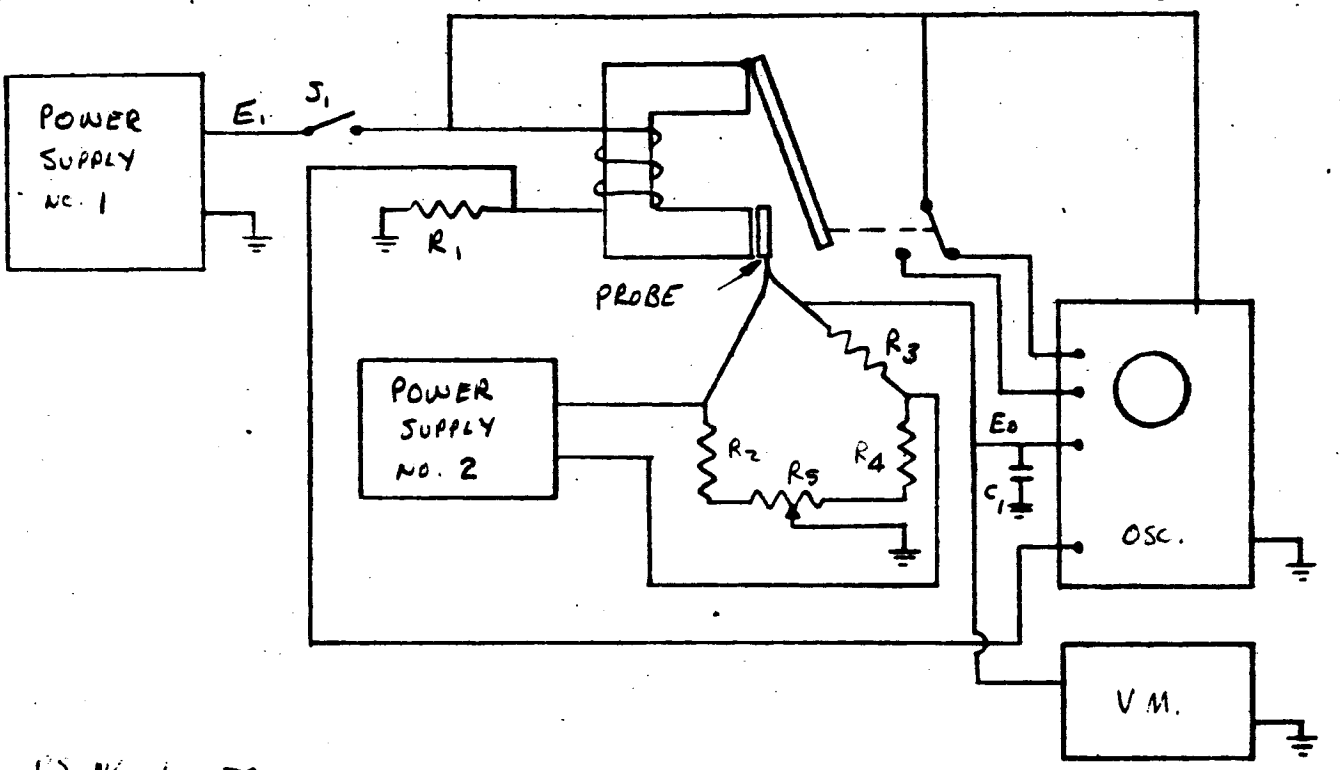


PS NO. 1 TRYGON M36-15A

PS NO. 2 1.5V BATTERY

OSC. TEKTRONIX 545

VM HP 412A

$R_1$ 100 Ω

$R_2$ 0 Ω

$R_3$ 500 Ω

$R_4$ 0 Ω

$R_5$ 1000 Ω

PROBE MRI-500

$E_1$

$C_1$ 0.1 μf

RELAY HI-G Inc. 2BC-1630-4

| d (in) | $E_0$ (mv) |
|---|---|
| CLOSED | 28.2 |
| 1/2 OPEN | 22. |
| OPEN | 12.5 |
| | |
| | |
| | |
| | |
| | |
| | |

1. DUE TO THE DESIGN OF THE ARMATURE AND POLE FACES, THE ARMATURE COULD NOT BE POSITIONED ACCURATELY TO MAKE DISPLACEMENT MEASUREMENTS. THE 1/2 OPEN MEASUREMENT IS IN APPROXIMATELY MID-POSITION

| | INITIALS | DATE | REV BY INITIALS | DATE | TITLE | MODEL |
|---|---|---|---|---|---|---|
| CALC | DZK | 3-3-66 | | | CURRENT SENSITIVE RELAY DISPLACEMENT MONITORING WITH MAGNEORESISTOR BRIDGE CIRCUIT | |
| CHECK | | | | | | |
| APPD. | | | | | | |
| APPD | | | | | | |

U3 4038 8000 REV 10 64

REV LTR

BOEING NO. D5-13268-3

SH. A-163

DATA SHEET 4

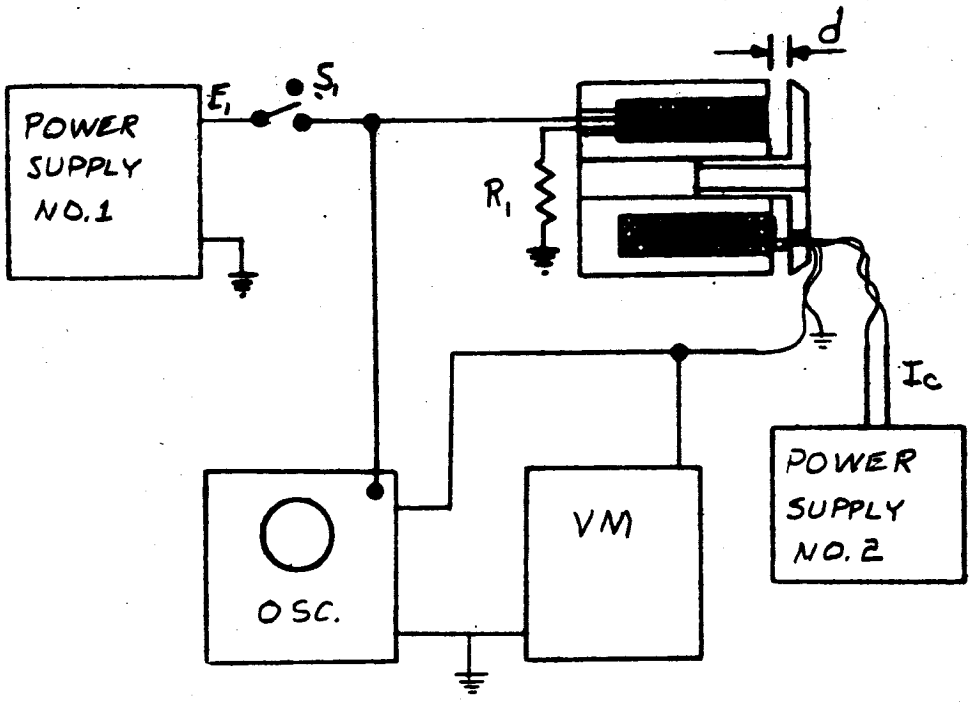


| | |
|---|---|
| PS No 1 | TRYGON M36-15A |
| PS No. 2 | TRYGON M36-5 |
| OSC | TEKTRONIX 545 |
| VM | HP-412 A |
| $R_1$ | 0 Ω |
| PROBE | BH-200 |
| $I_c$ | 150 ma |
| $E_1$ | 24 VDC |
| SOLENOID VALVE | MAROTTA MV74-MM |

| d(in) | $E_H$(mv) |
|---|---|
| 0.039 | 0.60 |
| .036 | .52 |
| .033 | .48 |
| .030 | .20 |
| .027 | — |
| .024 | .06 |
| .021 | .04 |
| .018 | -.06 |
| .015 | -.16 |
| .012 | -.36 |
| .009 | -.37 |
| .006 | .10 |
| .003 | .42 |
| .000 | .84 |
| | |

| | INITIALS | DATE | REV BY INITIALS | DATE | TITLE | MODEL |
|---|---|---|---|---|---|---|
| CALC | DZK | 2-28-66 | | | SOLENOID VALVE DISPLACEMENT MONITORING WITH TRANSVERSE HALL PROBE LOCATED ON END OF SOLENOID COIL | |
| CHECK | | | | | | |
| APPD. | | | | | | |
| APPD. | | | | | | |

U3 4038 8000 REV 10-64

REV LTR

DATA SHEET S-1

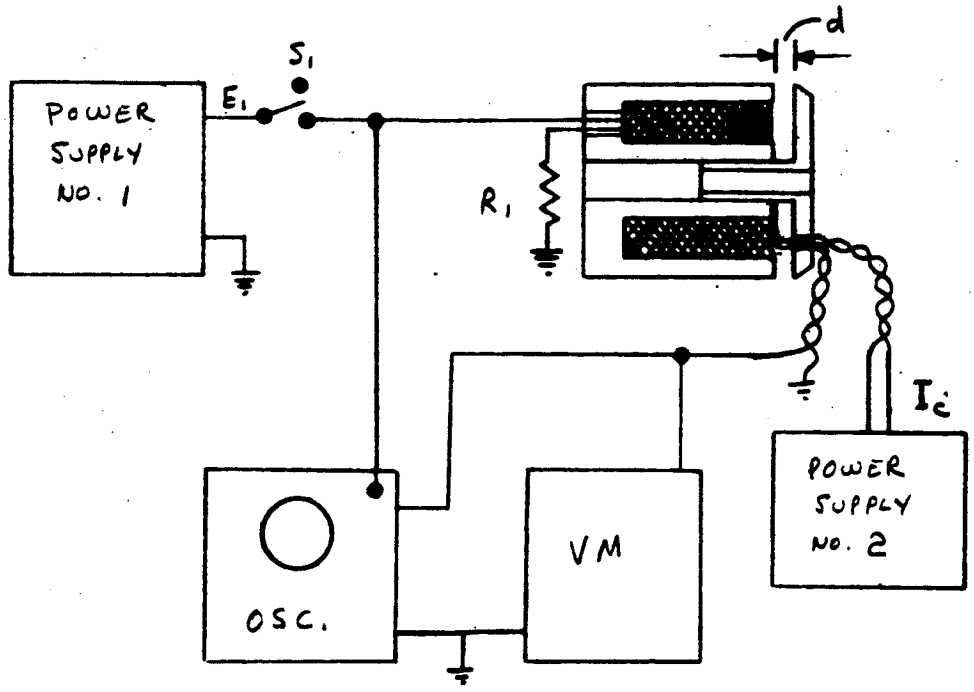


PS NO. 1 TRYGON M36-15A
PS NO. 2 TRYGON M36-5
OSC TEKTRONIX 545
VM HP 412A
$R_1$ 0 Ω
PROBE BH-207
$I_c$ 150 ma
$E_1$ 24VDC
SOLENOID VALVE MAROTTA MV74MM

| d (in) | $E_H$ (mv) |
|---|---|
| 0.030 | 52.0 |
| .027 | 53 |
| .024 | 54 |
| .021 | 56.2 |
| .018 | 57. |
| .015 | 56 |
| .012 | 54 |
| .009 | 52 |
| .006 | 49 |
| .003 | 46 |
| .000 | 43.5 |
| | |
| | |
| | |
| | |

| | INITIALS | DATE | REV BY INITIALS | DATE | TITLE | MODEL |
|---|---|---|---|---|---|---|
| CALC | DZK | 3-2-66 | | | SOLENOID VALVE DISPLACEMENT MONITORING WITH TANGENTIAL HALL PROBE LOCATED IN SLOT FILED IN THE INNER POLE | |
| CHECK | | | | | | |
| APPD. | | | | | | |
| APPD. | | | | | | |

U3 4038 8000 REV 10-64

REV LTR

DATA SHEET 5-2

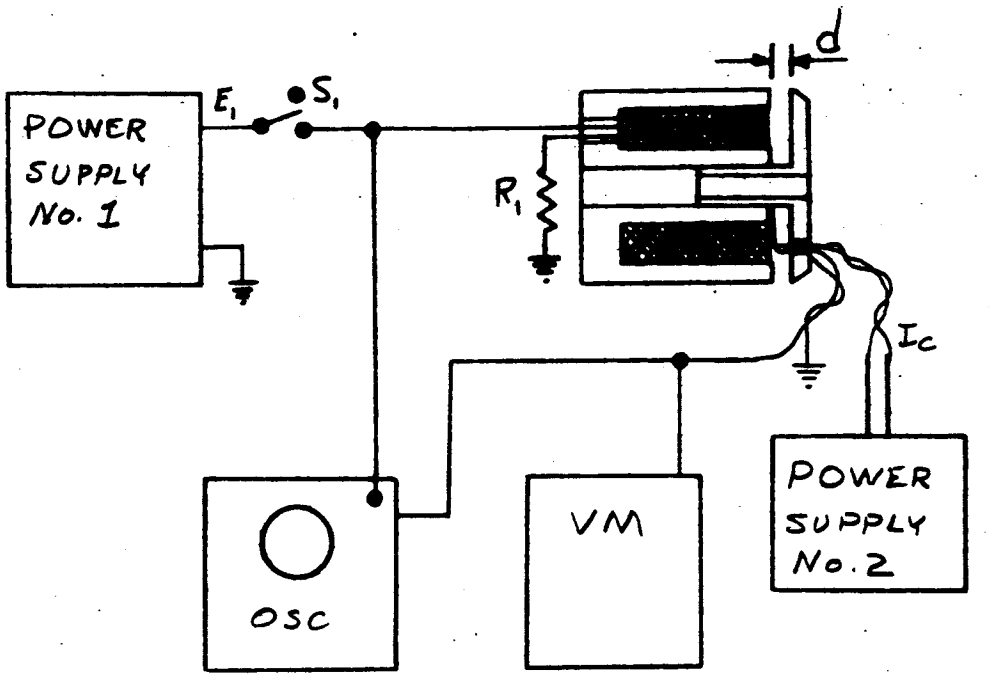


PS No 1 TRYGON M36-15A
PS No 2 TRYGON M36-5
OSC. TEKTRONIX 545
VM HP-412A
$R_1$ 0 Ω
PROBE BH-207
$I_c$ 150 ma
$E_1$ 24VDC
SOLENOID VALVE MAROTTA MV74MM

| d (in) | $E_H$ (mv) |
|---|---|
| 0.030 | — |
| .027 | — |
| .024 | 52.0 |
| .021 | 54.0 |
| .018 | 55.5 |
| .015 | 57.0 |
| .012 | 57.5 |
| .009 | 56.0 |
| .006 | 53.0 |
| .003 | 48.5 |
| .000 | 44.0 |
| | |
| | |
| | |
| | |

| | INITIALS | DATE | REV BY INITIALS | DATE | TITLE | MODEL |
|---|---|---|---|---|---|---|
| CALC | DZK | 3-2-66 | | | SOLENOID VALVE DISPLACEMENT MONITORING WITH TANGENTIAL HALL PROBE LOCATED IN SLOT FILED IN THE INNER POLE | |
| CHECK | | | | | | |
| APPD. | | | | | | |
| APPD. | | | | | | |

U3 4038 8000 REV 10-64

REV LTR

DATA SHEET 6-1

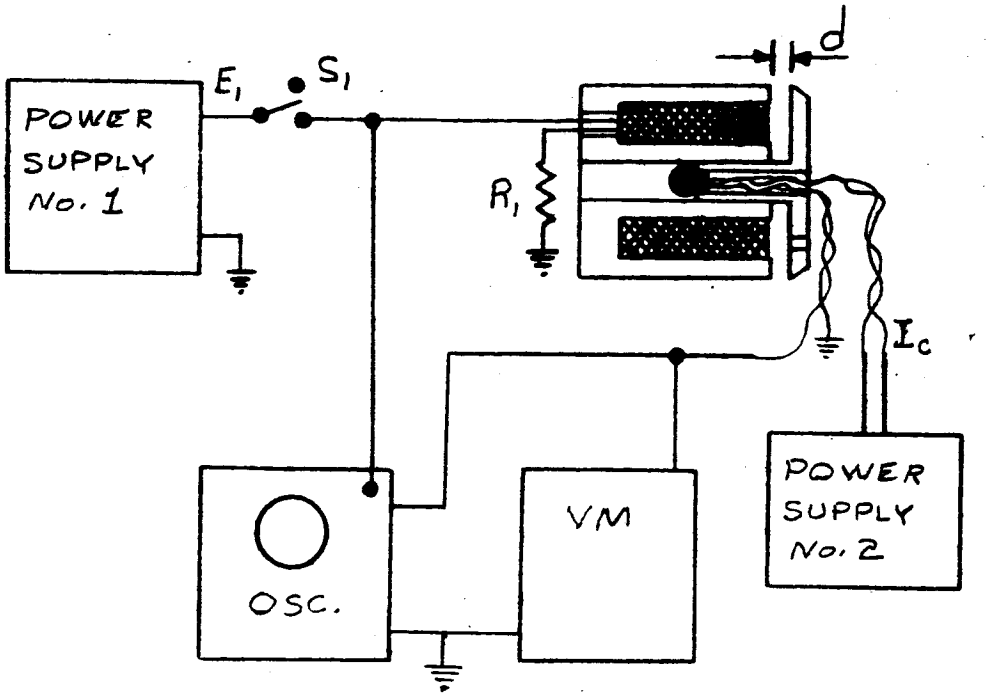


P.S. No 1 TRYGON M36-15A
PS No 2 TRYGON M36-5
OSC TEKTRONIX 545
VM HP 412 A
$R_1$ 0 Ω
PROBE BH-203
$I_c$ 150 ma.
$E_1$ 24 VDC
SOLENOID VALVE MAROTTA MV76

| d(in) | $E_H$(mv) |
|---|---|
| 0.030 | 4.0 |
| .027 | 4.05 |
| .024 | 4.2 |
| .021 | 4.4 |
| .018 | 4.8 |
| .015 | 4.85 |
| .012 | 5.0 |
| .009 | 5.1 |
| .006 | 5.2 |
| .003 | 5.3 |
| .000 | 5.38 |
| | |
| | |
| | |
| | |

| | INITIALS | DATE | REV BY INITIALS | DATE | TITLE | MODEL |
|---|---|---|---|---|---|---|
| CALC | DZK | 3-1-66 | | | SOLENOID VALVE DISPLACEMENT MONITORING WITH AXIAL HALL PROBE LOCATED NEAR THE CENTER OF THE SOLENOID ALONG THE AXIS | |
| CHECK | | | | | | |
| APPD. | | | | | | |
| APPD. | | | | | | |

U3 4038 8000 REV 10 64

REV LTR

BOEING NO D5-13268-3

SH. A-167

DATA SHEET 6-2

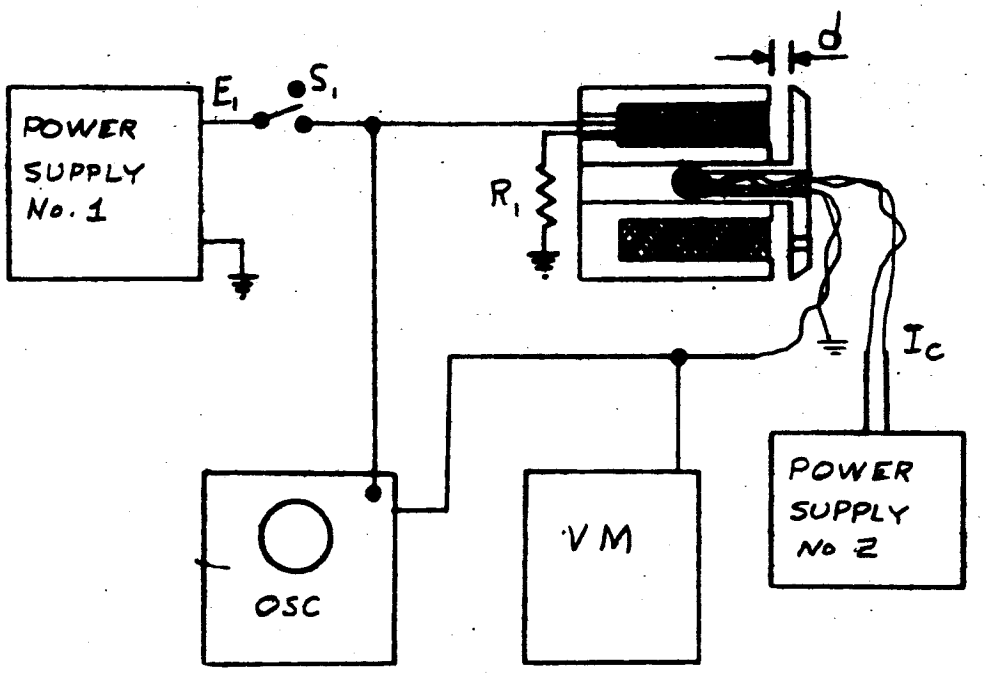


PS No 1 TRYGON M36-15A
PS No 2 TRYGON M36-5
OSC TEKTRONIX 545
VM HP 412A
$R_1$ 0 Ω
PROBE BH-203
$I_c$ 150 ma
$E_1$ 24 VDC
SOLENOID VALVE MAROTTA MV76

| d (in) | $E_H$ (mv) |
|---|---|
| 0.030 | 3.62 |
| .027 | 3.81 |
| .024 | 4.07 |
| .021 | 4.3 |
| .018 | 4.6 |
| .015 | 4.65 |
| .012 | 4.8 |
| .009 | 4.9 |
| .006 | 5.02 |
| .003 | 5.12 |
| .000 | 5.21 |
| | |
| | |
| | |
| | |

| | INITIALS | DATE | REV BY INITIALS | DATE | TITLE | MODEL |
|---|---|---|---|---|---|---|
| CALC | DZK | 3-1-66 | | | SOLENOID VALVE DISPLACEMENT MONITORING WITH AXIAL HALL PROBE LOCATED NEAR THE CENTER OF THE SOLENOID ALONG THE AXIS | |
| CHECK | | | | | | |
| APPD. | | | | | | |
| APPD. | | | | | | |

U3 4038 8000 REV 10-64

REV LTR

DATA SHEET 7-1

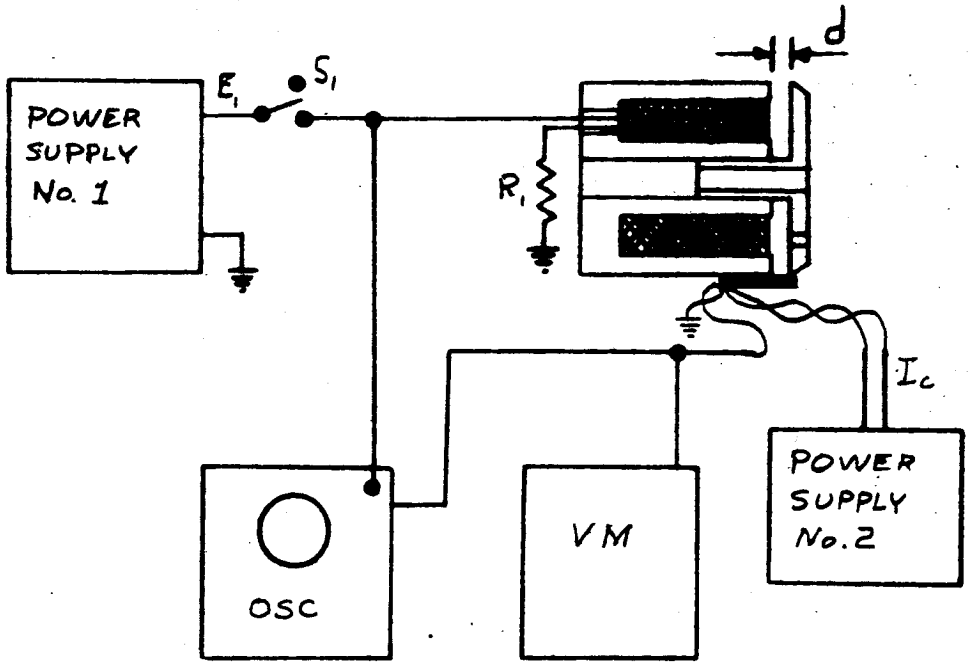


PS No1 TRYGON M36-15A.
PS No2 TRYGON M36-5
OSC TEKTRONIX 545
VM HP 412A
$R_1$ 0 Ω
PROBE BH-207
$I_c$ 150 ma
$E_1$ 24VDC
SOLENOID VALVE MAROTTA MV76

| d (in) | $E_H$ (mv) |
|---|---|
| 0.030 | 12.0 |
| .027 | 11.3 |
| .024 | 9.6 |
| .021 | 8.7 |
| .018 | 7.2 |
| .015 | 4.2 |
| .012 | 2.7 |
| .009 | 1.85 |
| .006 | .72 |
| .003 | -.01 |
| .000 | -.037 |
| | |
| | |
| | |
| | |

| | INITIALS | DATE | REV BY INITIALS | DATE | TITLE | MODEL |
|---|---|---|---|---|---|---|
| CALC | DZK | 2-28-66 | | | SOLENOID VALVE DISPLACEMENT MONITORING WITH TANGENTIAL HALL PROBE BRIDGING THE GAP BETWEEN THE FLAT-FACED ARMATURE AND THE OUTER POLE | |
| CHECK | | | | | | |
| APPD. | | | | | | |
| APPD | | | | | | |

U3 4038 8000 REV 10-64

REV LTR

DATA SHEET 7-2

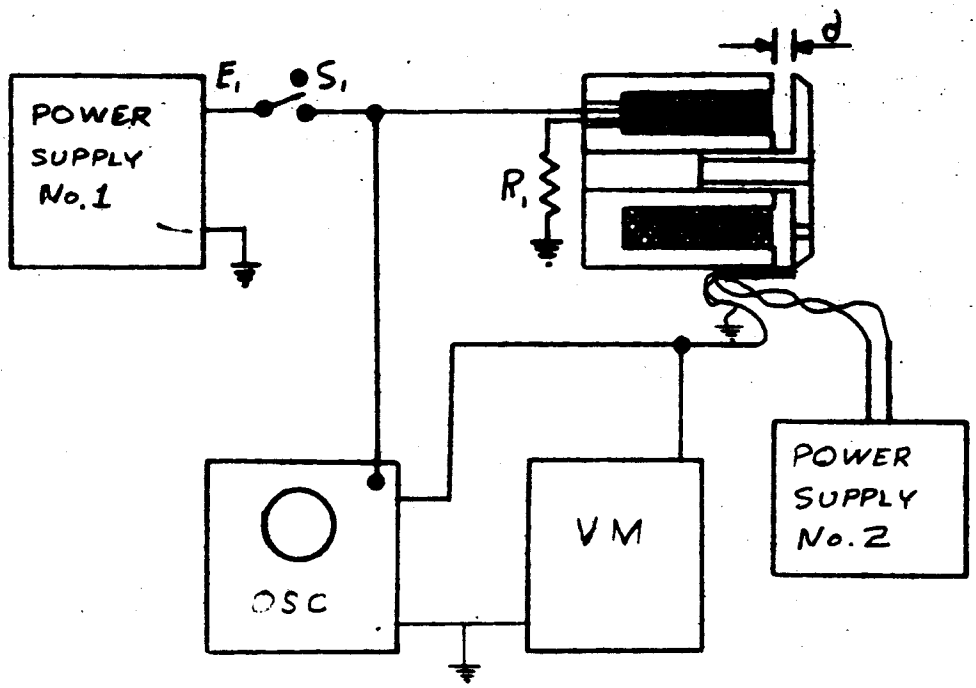


PS No. 1 TRYGON M36-15A
PS No 2 TRYGON M36-5
OSC. TEKTRONIX 545
VM HP 412 A
$R_1$ 0 Ω
PROBE BH-207
$I_c$ 150 ma
$E_1$ 24 VDC
SOLENOID VALVE MAROTTA MV76

| d(in) | $E_H$(mv) |
|---|---|
| 0.030 | 11.5 |
| .027 | 10.3 |
| .024 | 9.8 |
| .021 | 8.3 |
| .018 | 6.0 |
| .015 | 2.9 |
| .012 | 2.02 |
| .009 | .97 |
| .006 | .38 |
| .003 | -.18 |
| .000 | -.40 |
| | |
| | |
| | |
| | |

| | INITIALS | DATE | REV BY INITIALS | DATE | TITLE | MODEL |
|---|---|---|---|---|---|---|
| CALC | DZK | 2-28-66 | | | SOLENOID VALVE DISPLACEMENT MONITORING WITH TANGENTIAL HALL PROBE BRIDGING THE GAP BETWEEN THE FLAT-FACED ARMATURE AND THE OUTER POLE | |
| CHECK | | | | | | |
| APPD. | | | | | | |
| APPD. | | | | | | |

U3 4038 8000 REV 10-64

REV LTR

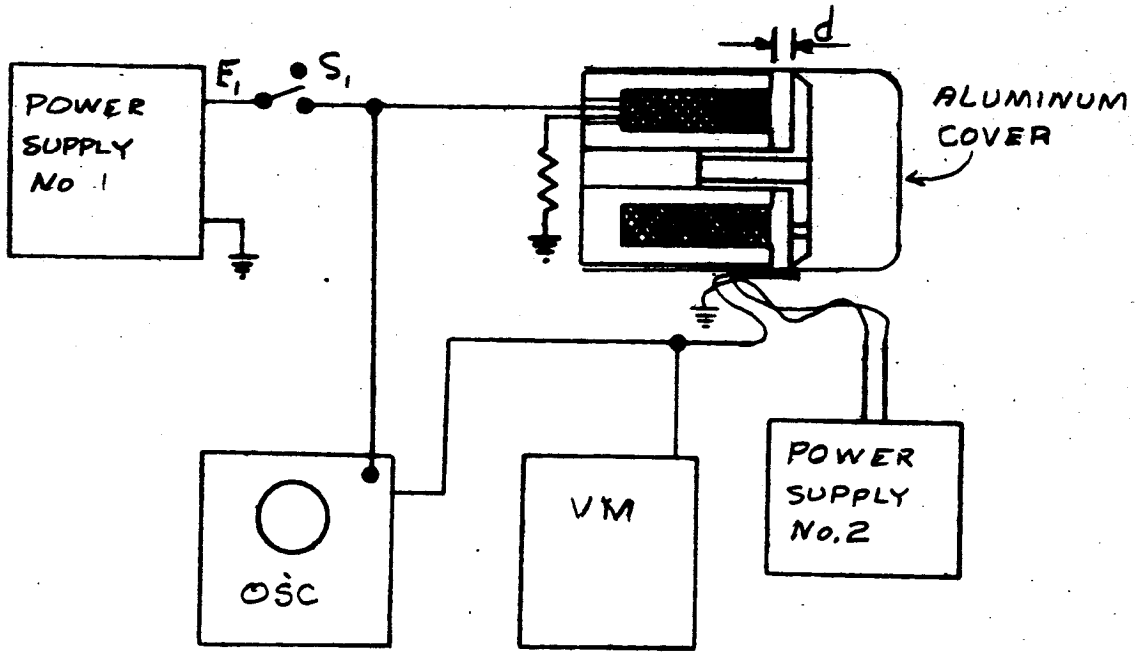


| | |
|---|---|
| PS No.1 | TRYGON M36-15A |
| PS No.2 | 1.5V Batt. & 8.2 Ω |
| OSC. | TEKTRONIX 545 |
| VM | |
| $R_1$ | 0 Ω |
| PROBE | BH-200 |
| $I_c$ | ≈ 150 ma |
| $E_1$ | 24VDC |
| SOLENOID VALVE | MV74MM, MV76 |

NOTE: DISPLACEMENT DATA WAS NOT MONITORED BECAUSE THE GAP WAS INACCESSABLE WITH THE ALUMINUM COVER IN PLACE

| d | $E_H$ |
|---|---|
| | |
| | |
| | |
| | |
| | |
| | |
| | |
| | |
| | |
| | |
| | |
| | |
| | |
| | |

| | INITIALS | DATE | REV BY INITIALS | DATE | TITLE | MODEL |
|---|---|---|---|---|---|---|
| CALC | DCK | 3-24-66 | | | SOLENOID VALVE MONITORING WITH TRANSVERSE HALL PROBE MOUNTED ON SOLENOID COVER IN THE VICINITY OF THE ARMATURE GAP | |
| CHECK | | | | | | |
| APPD. | | | | | | |
| APPD. | | | | | | |

U3 4038 8000 REV 10-64

REV LTR

DATA SHEET 9

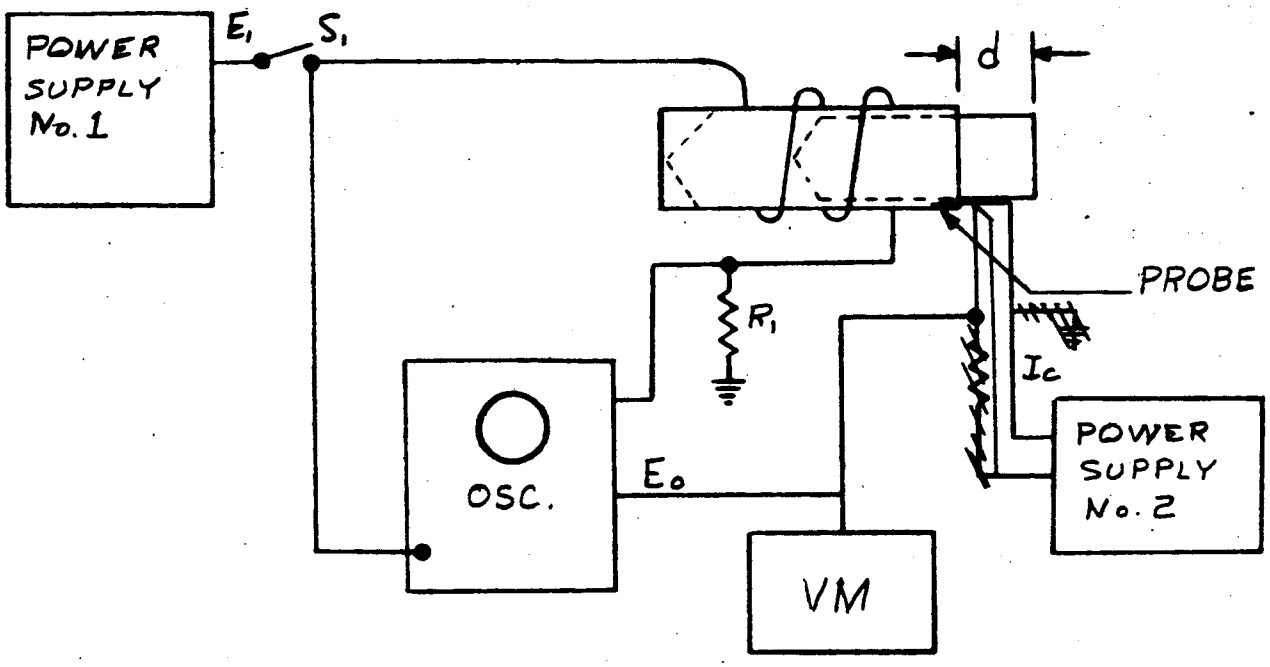


PS No 1 TRYGON M36-15A
PS No 2 TRYGON M36-10A
OSC. TEKTRONIX 545, "M" PLUG IN
PROBE BH-207
VM HP 412A
$R_1$ 0 Ω
~~$B_1$~~
$E_1$ 3V, 12A.
$I_c$ 150 ma
SOLENOID - 1953 BUICK STARTER

| d (in) | $E_o$ (mv) |
|---|---|
| 0 | 45.5 |
| 1/16 | 36.2 |
| 1/8 | 31.5 |
| 3/16 | 25.5 |
| 1/4 | 21.8 |
| 5/16 | 18.3 |
| 3/8 | 15.6 |
| 7/16 | 14.9 |
| 1/2 | 11.8 |
| 9/16 | 10.0 |
| 5/8 | 8.5 |
| 11/16 | 7.0 |
| 3/4 | 6.6 |
| 13/16 | 5.7 |
| 7/8 | 5.3 |
| 15/16 | 4.8 |
| 1 | 4.1 |

| | INITIALS | DATE | REV BY INITIALS | DATE | TITLE | MODEL |
|---|---|---|---|---|---|---|
| CALC | DZK | 2-15-66 | | | SOLENOID PLUNGER DISPLACEMENT MONITORED WITH TANGENTIAL HALL PROBE LOCATED IN ANULAR SPACE ABOUT THE SOLENOID PLUNGER | |
| CHECK | | | | | | |
| APPD. | | | | | | |
| APPD. | | | | | | |

03 4038 8000 REV 10 64

REV LTR

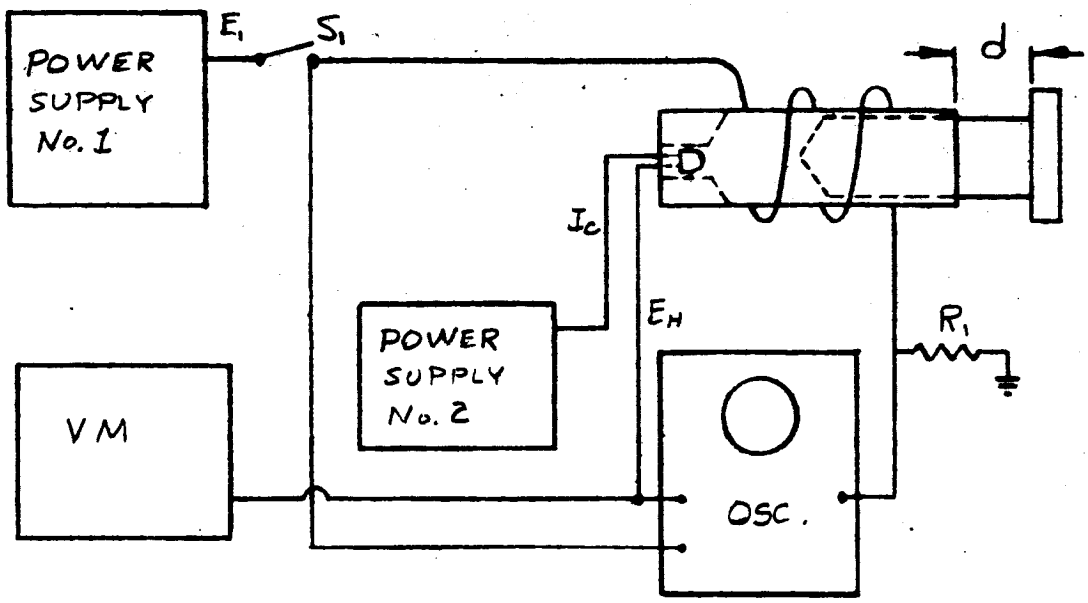


| | |
|---|---|
| P.S. No. 1 | TRYGON M36-15A |
| PS No. 2 | TRYGON M36-10A |
| VM | HP-412A |
| OSC. | TEKTRONIX 545 |
| $R_1$ | 0 Ω |
| PROBE | BH-203 |
| $E_1$ | 3VDC, 12 A. |
| $I_c$ | 96 ma |
| SOLENOID | 1953 BUICK STARTER |

| d (in) | $E_H$ (mv) |
|---|---|
| 0 | 4.3 |
| 1/32 | 4.8 |
| 1/16 | 4.6 |
| 3/32 | 3.8 |
| 1/8 | 3.1 |
| 3/16 | 1.95 |
| 1/4 | 1.25 |
| 5/16 | 0.9 |
| 3/8 | 0.65 |
| 7/16 | 0.45 |
| 1/2 | 0.35 |
| 9/16 | 0.26 |
| 5/8 | 0.22 |
| 11/16 | 0.18 |
| 3/4 | 0.14 |
| 13/16 | 0.12 |
| 7/8 | 0.11 |
| 15/16 | 0.10 |

| | INITIALS | DATE | REV BY INITIALS | DATE | TITLE | MODEL |
|---|---|---|---|---|---|---|
| CALC | D-2K | 2-14-66 | | | SOLENOID PLUNGER DISPLACEMENT MONITORED WITH AXIAL HALL PROBE LOCATED IN THE END OF THE SOLENOID | |
| CHECK | | | | | | |
| APPD. | | | | | | |
| APPD. | | | | | | |

U3 4038 8000 REV 10-64

REV LTR

DATA SHEET 10-2

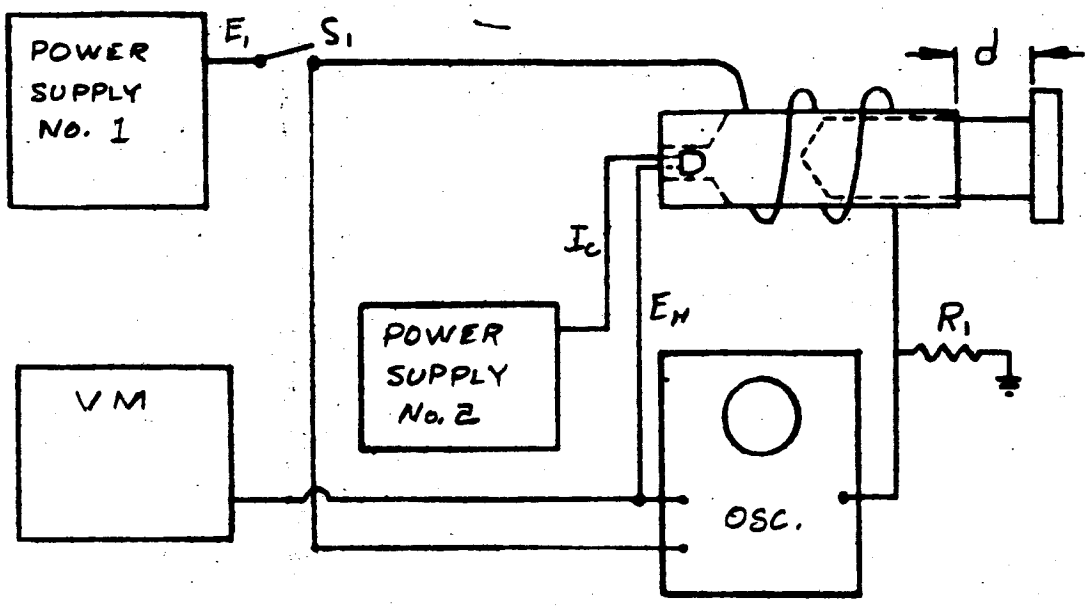


| | |
|---|---|
| PS No 1 | TRYGON M36-15A |
| PS No 2 | TRYGON M36-10A |
| VM | HP 412A |
| OSC. | TEKTRONIX 545 |
| $R_1$ | 0 Ω |
| PROBE | BH-203 |
| $E_1$ | 2VDC, 8A. |
| $I_c$ | 96 ma |
| SOLENOID | 1953 BUICK STARTER |

| d (in) | $E_H$ (mv) |
|---|---|
| 0 | 3.6 |
| 1/16 | 3.4 |
| 1/8 | 2.2 |
| 3/16 | 1.2 |
| 1/4 | 0.8 |
| 5/16 | 0.55 |
| 3/8 | 0.35 |
| 7/16 | 0.26 |
| 1/2 | 0.19 |
| 9/16 | 0.15 |
| 5/8 | 0.12 |
| 11/16 | 0.09 |
| 3/4 | 0.08 |
| 7/8 | 0.06 |
| 15/16 | 0.05 |
| | |
| | |
| | |

| | INITIALS | DATE | REV BY INITIALS | DATE | TITLE | MODEL |
|---|---|---|---|---|---|---|
| CALC | DZK | 2-14-66 | | | SOLENOID PLUNGER DISPLACEMENT MONITORED WITH AXIAL HALL PROBE LOCATED IN THE END OF THE SOLENOID | |
| CHECK | | | | | | |
| APPD. | | | | | | |
| APPD. | | | | | | |

U3 4038 8000 REV 10-64

REV LTR

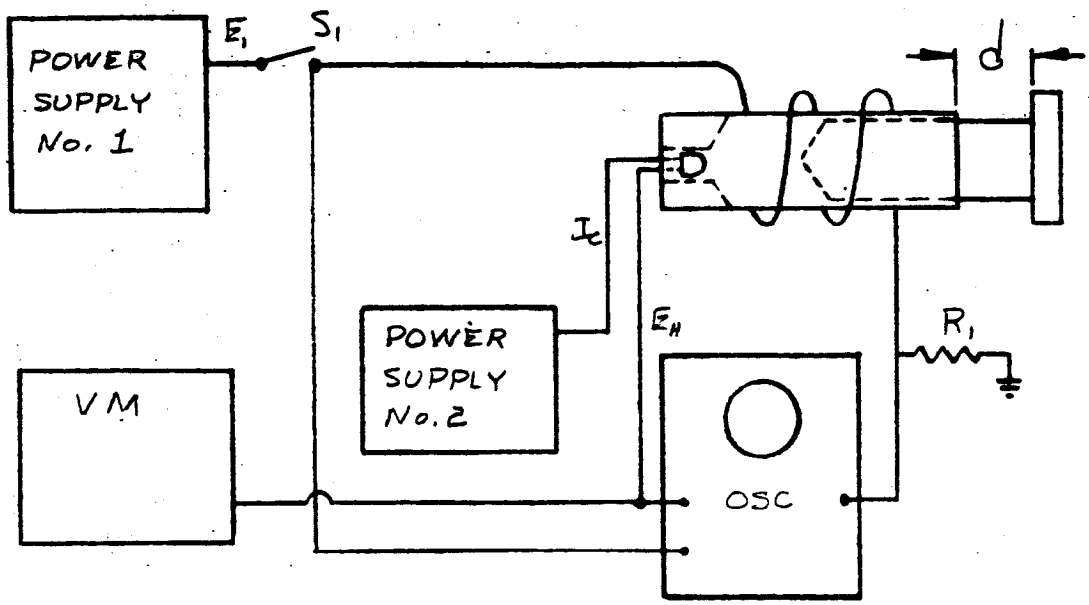


| | |
|---|---|
| PS No 1 | TRYGON M36-15A |
| PS No 2 | TRYGON M36-10A |
| VM | HP-412A |
| OSC | TEKTRONIX 545 |
| $R_1$ | 0 Ω |
| PROBE | BH-203 |
| $E_1$ | 2 VDC, 8A. |
| $I_c$ | 96 ma |
| SOLENOID | 1953 BUICK STARTER |

| d (in) | $E_H$ (mv.) |
|---|---|
| 0 | 3.5 |
| 1/16 | 3.4 |
| 1/8 | 2.2 |
| 3/16 | 1.2 |
| 1/4 | 0.8 |
| 5/16 | 0.5 |
| 3/8 | 0.36 |
| 7/16 | 0.26 |
| 1/2 | 0.20 |
| 9/16 | 0.16 |
| 5/8 | 0.12 |
| 11/16 | 0.10 |
| 3/4 | 0.08 |
| 7/8 | 0.06 |
| 15/16 | 0.05 |
| | |
| | |
| | |

| | INITIALS | DATE | REV BY INITIALS | DATE | TITLE | MODEL |
|---|---|---|---|---|---|---|
| CALC | DZK | 2-14-66 | | | SOLENOID PLUNGER DISPLACEMENT MONITORED WITH AXIAL HALL PROBE LOCATED IN THE END OF THE SOLENOID | |
| CHECK | | | | | | |
| APPD. | | | | | | |
| APPD. | | | | | | |

U3 4038 8000 REV 10-64

REV LTR

DATA SHEET 11-1

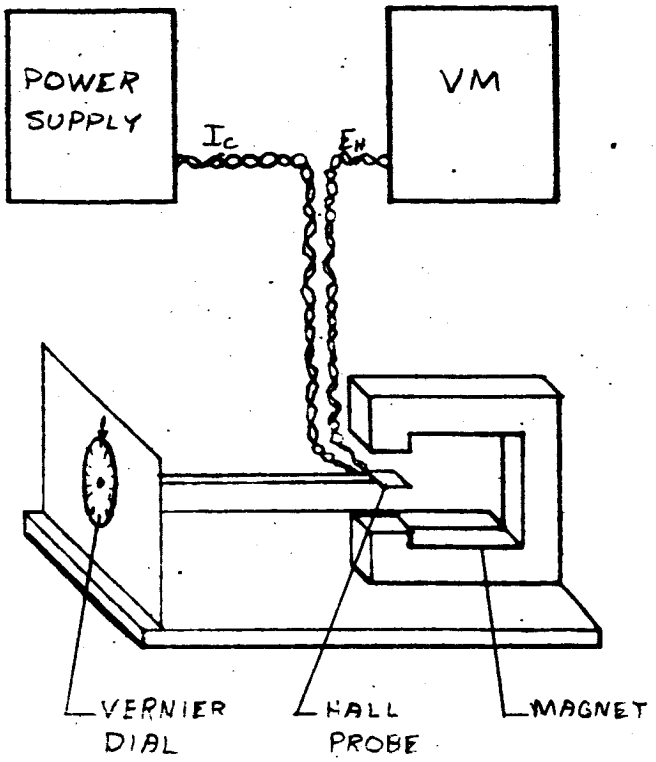


| VERNIER SCALE | $\theta$ | $E_H$ (mv) |
|---|---|---|
| 0 | 0° | 24.2 |
| 8.3 | 15 | 23.4 |
| 16.6 | 30 | 20.8 |
| 25.0 | 45 | 16.6 |
| 33.3 | 60 | 12.1 |
| 41.7 | 75 | 6.08 |
| 50.0 | 90 | 0.8 |
| 58.3 | 105 | -6.04 |
| 66.6 | 120 | -11.9 |
| 75.0 | 135 | -17.0 |
| 83.3 | 150 | -20.8 |
| 91.6 | 165 | -23.1 |
| 100.0 | 180 | -24.0 |
| 108.2 | 195 | -23.3 |
| 116.8 | 210 | -20.7 |
| 125.0 | 225 | -16.9 |
| 133.3 | 240 | -12.[illegible] |
| 141.6 | 255 | -6.4 |
| 150.0 | 270 | 0 |
| 158.2 | 285 | 6.2 |
| 166.6 | 300 | 12.1 |
| 175.0 | 315 | 17.2 |
| 183.3 | 330 | 21.0 |
| 191.7 | 345 | 23.3 |
| 200.0 | 360 | 24.1 |

| | |
|---|---|
| POWER SUPPLY | TRYGON M36-5 |
| VOLT METER | HP 412A |
| PROBE | BH-207 |
| $I_c$ | 150 ma |

| | INITIALS | DATE | REV BY INITIALS | DATE | TITLE | MODEL |
|---|---|---|---|---|---|---|
| CALC | DZK | 2-1-66 | | | ANGULAR DISPLACEMENT MONITORING | |
| CHECK | | | | | | |
| APPD. | | | | | | |
| APPD. | | | | | | |

U3 4038 8000 REV 10-64

REV LTR

DATA SHEET 11-2

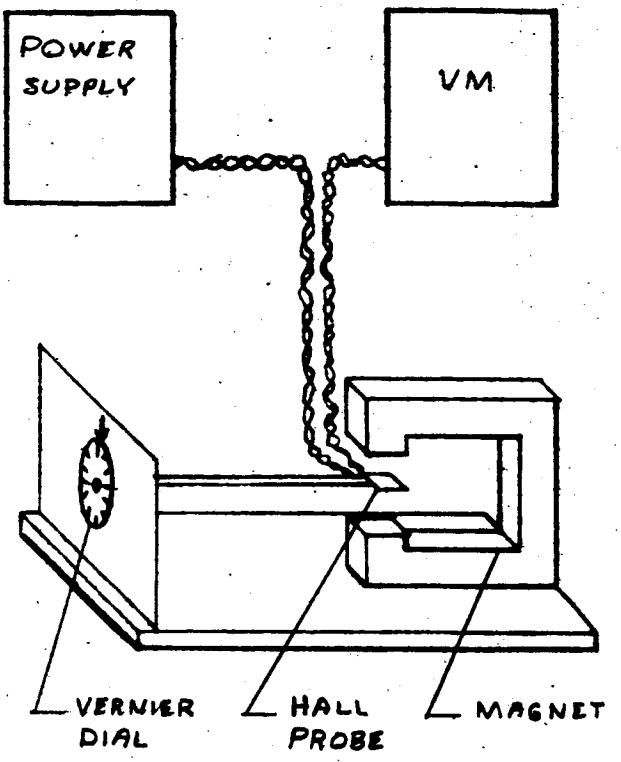


| VERNIER DIAL | θ | $E_H$ (mv) |
|---|---|---|
| 0 | 0° | 16.2 |
| 8.3 | 15 | 15.7 |
| 16.6 | 30 | 14.2 |
| 25.0 | 45 | 11.3 |
| 33.3 | 60 | 8.2 |
| 41.7 | 75 | 4.18 |
| 50.0 | 90 | 0.06 |
| 58.3 | 105 | -4.12 |
| 66.6 | 120 | -7.9 |
| 75.0 | 135 | -11.5 |
| 83.3 | 150 | -14.0 |
| 91.6 | 165 | -15.5 |
| 100.0 | 180 | -16.2 |
| 108.2 | 195 | -15.7 |
| 116.8 | 210 | -13.9 |
| 125.0 | 225 | -11.4 |
| 133.3 | 240 | -8.2 |
| 141.6 | 255 | -4.3 |
| 150.0 | 270 | 0 |
| 158.2 | 285 | 4.2 |
| 166.6 | 300 | 8.0 |
| 175.0 | 315 | 11.6 |
| 183.3 | 330 | 14.0 |
| 191.7 | 345 | 15.6 |
| 200.0 | 360 | 16.2 |

| | |
|---|---|
| POWER SUPPLY | TRYGON M36-5 |
| VM | HP 412 A |
| PROBE | BH-207 |
| $I_c$ | 100 ma |

| | INITIALS | DATE | REV BY INITIALS | DATE | TITLE | MODEL |
|---|---|---|---|---|---|---|
| CALC | DZK | 2-1-66 | | | ANGULAR DISPLACEMENT MONITORING | |
| CHECK | | | | | | |
| APPD. | | | | | | |
| APPD. | | | | | | |

U3 4038 8000 REV 10-64

REV LTR

BOEING NO. D5-13268-3

SH. A-177

DATA SHEET 11-3

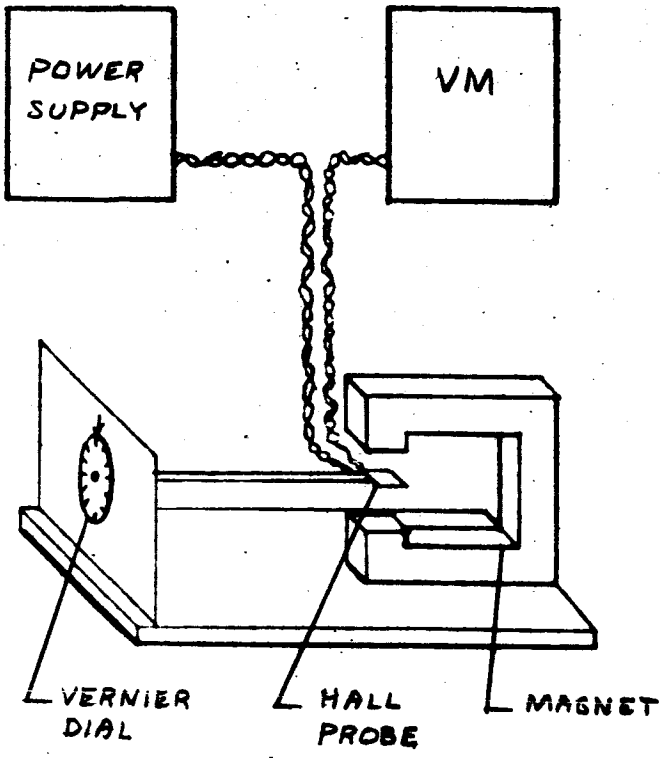


| VERNIER DIAL | θ | $E_H$ (mv) |
|---|---|---|
| 0 | 0° | 8.18 |
| 8.3 | 15 | 7.90 |
| 16.6 | 30 | 7.05 |
| 25.0 | 45 | 5.65 |
| 33.3 | 60 | 4.09 |
| 41.7 | 75 | 2.13 |
| 50.0 | 90 | 0 |
| 58.3 | 105 | -2.00 |
| 66.6 | 120 | -3.97 |
| 75.0 | 135 | -5.64 |
| 83.3 | 150 | -6.98 |
| 91.6 | 165 | -7.77 |
| 100.0 | 180 | -8.10 |
| 108.2 | 195 | -7.84 |
| 116.8 | 210 | -7.00 |
| 125.0 | 225 | -5.68 |
| 133.3 | 240 | -4.02 |
| 141.6 | 255 | -2.15 |
| 150.0 | 270 | 0 |
| 158.2 | 285 | 2.10 |
| 166.6 | 300 | 4.05 |
| 175.0 | 315 | 5.80 |
| 183.3 | 330 | 7.10 |
| 191.7 | 345 | 7.88 |
| 200.0 | 360 | 8.15 |

| | |
|---|---|
| POWER SUPPLY | TRYGON M36-5 |
| VM | HP412A |
| PROBE | BH-207 |
| Ic | 50 ma. |

| | INITIALS | DATE | REV BY INITIALS | DATE | TITLE | MODEL |
|---|---|---|---|---|---|---|
| CALC | D2K | 2-1-66 | | | ANGULAR DISPLACEMENT MONITORING | |
| CHECK | | | | | | |
| APPD. | | | | | | |
| APPD. | | | | | | |

U3 4038 8000 REV 10-64

REV LTR

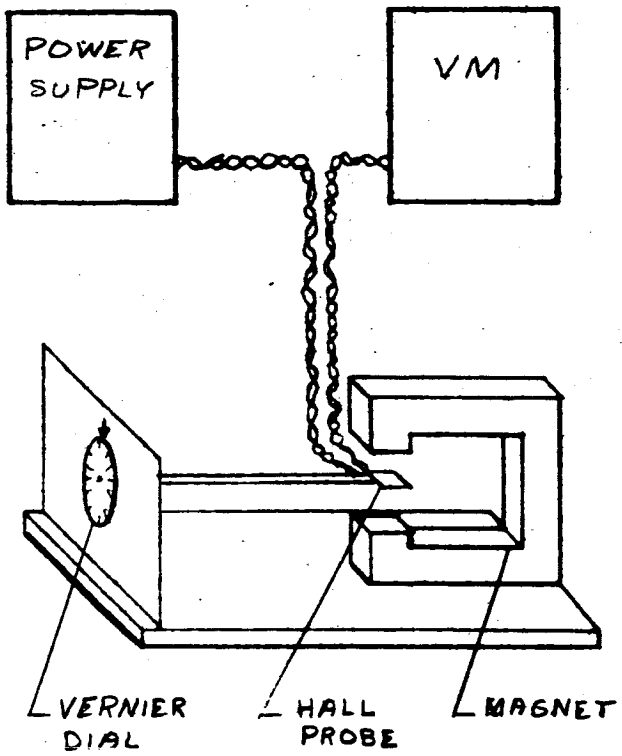


| VERNIER DIAL | θ | $E_H$ (mv) |
|---|---|---|
| 0 | 0° | 19.5 |
| 8.3 | 15 | 19.0 |
| 16.6 | 30 | 17.0 |
| 25.0 | 45 | 13.7 |
| 33.3 | 60 | 9.8 |
| 41.7 | 75 | 5.2 |
| 50.0 | 90 | 0 |
| 58.3 | 105 | -5.0 |
| 66.6 | 120 | -9.5 |
| 75.0 | 135 | -13.8 |
| 83.3 | 150 | -16.9 |
| 91.6 | 165 | -18.8 |
| 100.0 | 180 | -19.5 |
| 108.2 | 195 | -18.9 |
| 116.8 | 210 | -16.9 |
| 125.0 | 225 | -13.8 |
| 133.3 | 240 | -10.0 |
| 141.6 | 255 | -5.4 |
| 150.0 | 270 | 0 |
| 158.2 | 285 | 5.2 |
| 166.6 | 300 | 9.8 |
| 175.0 | 315 | 14.1 |
| 183.3 | 330 | 17.2 |
| 191.7 | 345 | 19.0 |
| 200.0 | 360 | 19.7 |

| | |
|---|---|
| POWER SUPPLY | TRYGON M36-5 |
| VM | HP 412A |
| PROBE | BH-207 |
| $I_c$ | 150 ma |
| $R_{LIN.}$ | 7 Ω |

| | INITIALS | DATE | REV BY INITIALS | DATE | TITLE | MODEL |
|---|---|---|---|---|---|---|
| CALC | DZK | 2-1-66 | | | ANGULAR DISPLACEMENT MONITORING | |
| CHECK | | | | | | |
| APPD. | | | | | | |
| APPD. | | | | | | |

U3 4038 8000 REV 10-64

REV LTR_____

DATA SHEET 11-5

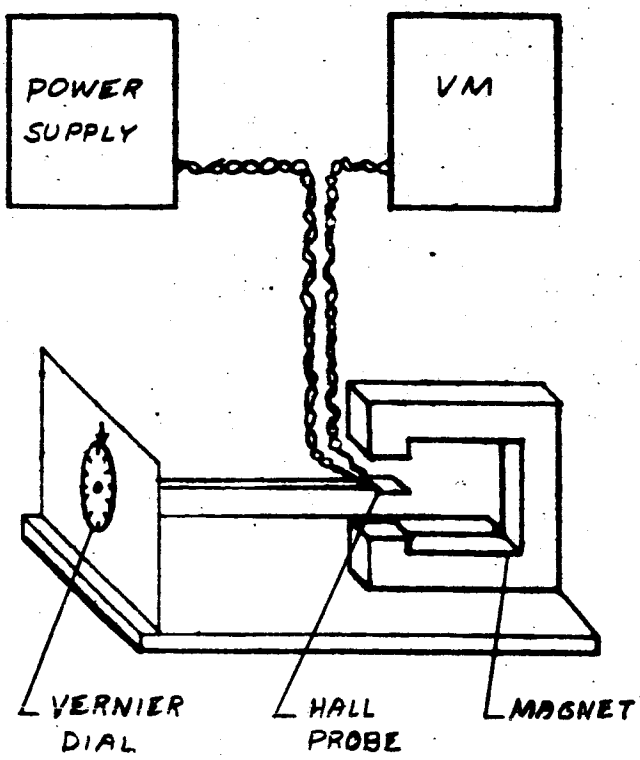


| VERNIER DIAL | θ | $E_H$ (mv) |
|---|---|---|
| 0 | 0° | 21.4 |
| 8.3 | 15 | 20.7 |
| 16.6 | 30 | 18.7 |
| 25.0 | 45 | 15.3 |
| 33.3 | 60 | 11.2 |
| 41.7 | 75 | 6.2 |
| 50.0 | 90 | 0.3 |
| 58.3 | 105 | -5.0 |
| 66.6 | 120 | -10.3 |
| 75.0 | 135 | -14.7 |
| 83.3 | 150 | -18.2 |
| 91.6 | 165 | -20.5 |
| 100.0 | 180 | -21.0 |
| 108.2 | 195 | -20.4 |
| 116.8 | 210 | -18.1 |
| 125.0 | 225 | -14.8 |
| 133.3 | 240 | -10.7 |
| 141.6 | 255 | -5.8 |
| 150.0 | 270 | -0.4 |
| 158.2 | 285 | 4.8 |
| 166.6 | 300 | 10.2 |
| 175.0 | 315 | 14.8 |
| 183.3 | 330 | 18.3 |
| 191.7 | 345 | 20.5 |
| 200.0 | 360 | 21.4 |

| | |
|---|---|
| POWER SUPPLY | TRYGON M36-5 |
| VM | HP 412A |
| PROBE | BH-200 |
| $I_c$ | 150 ma |

| | INITIALS | DATE | REV BY INITIALS | DATE | TITLE | MODEL |
|---|---|---|---|---|---|---|
| CALC | DZK | 2-22-66 | | | ANGULAR DISPLACEMENT MONITORING | |
| CHECK | | | | | | |
| APPD. | | | | | | |
| APPD. | | | | | | |

U3 4038 8000 REV. 10-64

REV LTR

BOEING NO. D5-13268-3

SH. A-180

# $E_{H(MAX)}$ VS CONTROL CURRENT

PROBE BH-207

| $I_c$ (ma) | $E_H$ $R_{LIN} = 7\Omega$ | $E_H$ $R_{LIN} = \infty$ |
|---|---|---|
| 0 | 20 μv | 20 μv |
| 50 | 6.72 mv | 8.17 mv |
| 100 | 14.3 | 16.6 |
| 150 | 20.0 | 24.7 |
| 200 | 26.7 | 33.0 |
| 250 | 33.5 | 40.4 |

SENSITIVITY NEAR 0°
$I_c$ = 149 ma

| $E_H$ (mv) | VERNIER DIAL |
|---|---|
| 24 | 0 |
| 23 | 9.4 |
| 22 | 12.7 |
| 21 | 15.5 |
| 20 | 17.8 |
| 19 | 20.0 |
| 18 | 22.0 |
| 17 | 24.0 |
| 16 | 26.0 |
| 15 | 27.8 |

SENSITIVITY NEAR 90°
$I_c$ = 150 ma

| $E_H$ (μv) | VERNIER DIAL |
|---|---|
| 0 | 49.8 |
| 100 | 50.0 |
| 200 | 50.2 |
| 300 | 50.5 |
| 400 | 50.7 |
| 500 | 50.8 |
| 600 | 50.9 |
| 700 | 51.0 |
| 800 | 51.2 |
| 900 | 51.4 |
| 1000 | 51.5 |

| | INITIALS | DATE | REV BY INITIALS | DATE | TITLE | MODEL |
|---|---|---|---|---|---|---|
| CALC | DZK | 2-1-66 | | | ANGULAR POSITION SENSITIVITIES | |
| CHECK | | | | | | |
| APPD. | | | | | | |
| APPD. | | | | | | |

U3 4038 8000 REV 10-64

REV LTR

DATA SHEET 13-1

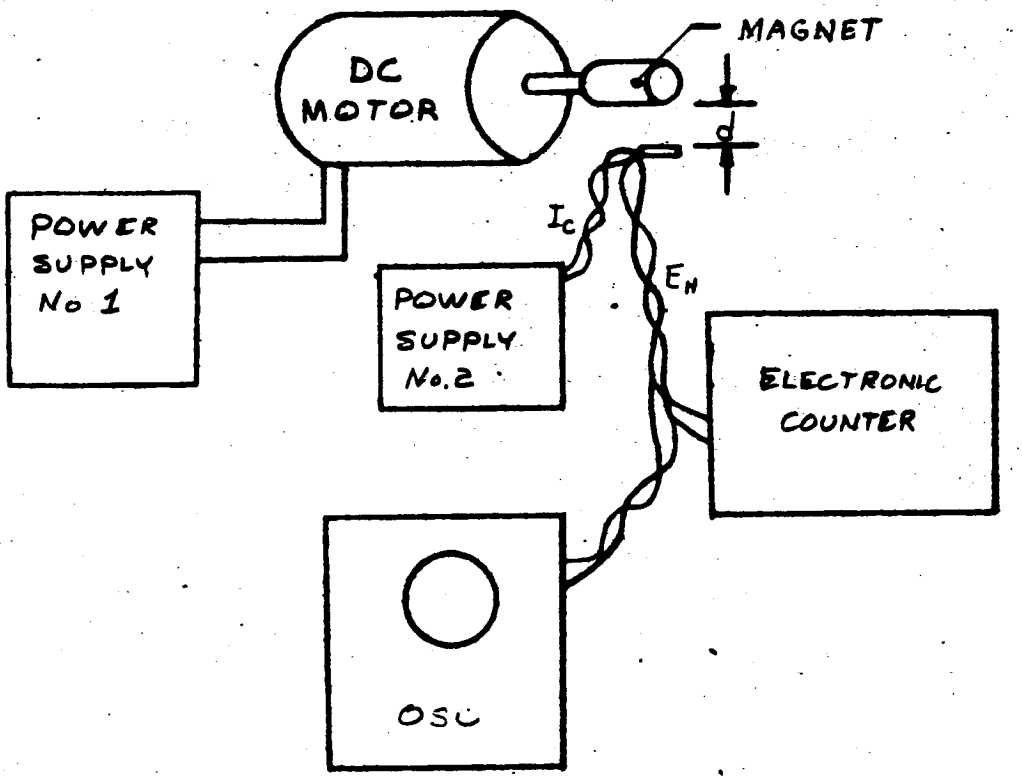


P.S. No. 1 FLUKE Mod. 301E
PS No 2 TRYGON M36-15A
DC MOTOR DAYTON 2M307
ELECTRONIC COUNTER - BECKMAN 7370R
OSC TEKTRONIX 545
MAGNET
PROBE BH-207
RPM 3000
$I_c$ 150 ma

| d (in) | $E_H$ (mv) |
|---|---|
| 0.025 | 14.5 |
| .050 | 12.0 |
| .065 | 10.5 |
| .067 | 10.0 |
| .150 | 6.2 |
| | |
| | |
| | |
| | |
| | |

| | INITIALS | DATE | REV BY INITIALS | DATE | TITLE | MODEL |
|---|---|---|---|---|---|---|
| CALC | DZK | 2-4-66 | | | ANGULAR VELOCITY HALL VOLTAGE V.S. DISTANCE | |
| CHECK | | | | | | |
| APPD. | | | | | | |
| APPD. | | | | | | |

U3 4038 8000 REV 10-64

REV LTR

BOEING NO. D5-13268-3
SH. A-182

DATA SHEET 13-2

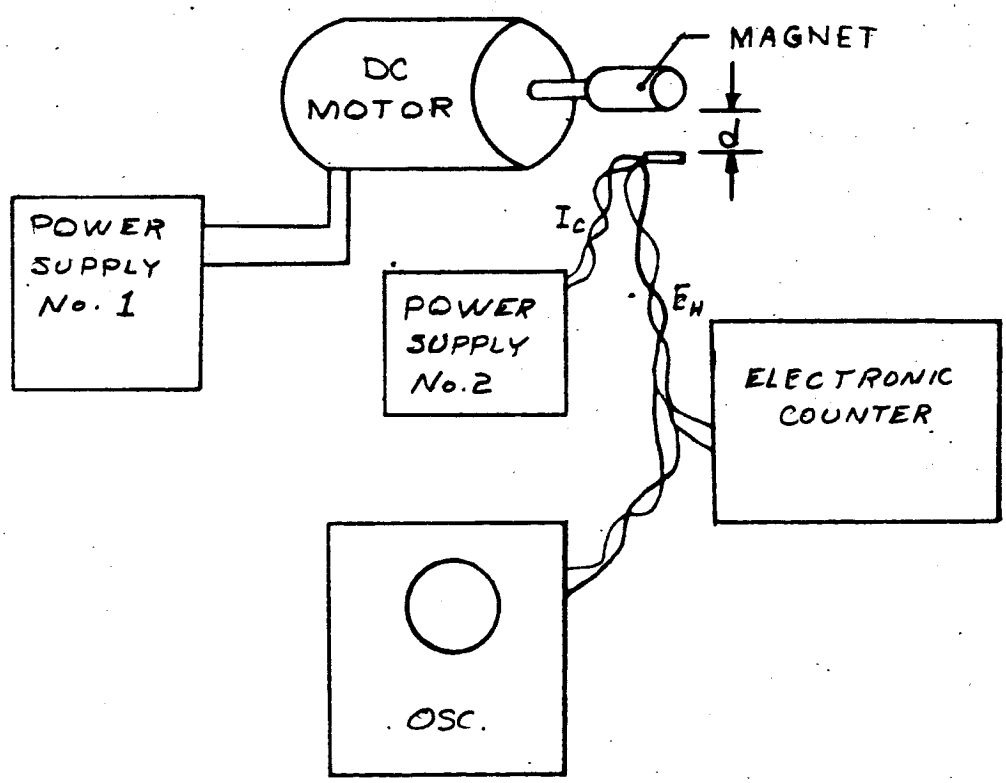


PS No. 1 FLUKE Mod. 301E
PS No 2 TRYGON M36-15A
DC MOTOR - DAYTON 2M037
ELECTRONIC COUNTER - BECKMAN 7370R
OSC. TEKTRONIX 545
MAGNET
PROBE BH-207
RPM 0
$I_C$ 150 ma

| d(in) | $E_H$(mv) |
|---|---|
| 0.025 | 15.0 |
| .050 | 11.5 |
| .067 | 9.5 |
| .150 | 6.2 |
| .250 | 3.2 |
| .500 | 1.2 |
| .645 | 0.7 |
| | |
| | |
| | |

| | INITIALS | DATE | REV BY INITIALS | DATE | TITLE | MODEL |
|---|---|---|---|---|---|---|
| CALC | DZK | 2-4-66 | | | ANGULAR VELOCITY HALL VOLTAGE VS. DISTANCE | |
| CHECK | | | | | | |
| APPD | | | | | | |
| APPD | | | | | | |

U3 4018 5000 REV 10 64

REV LTR

BOEING NO D5-13268-3
SH A-183

DATA SHEET A-1

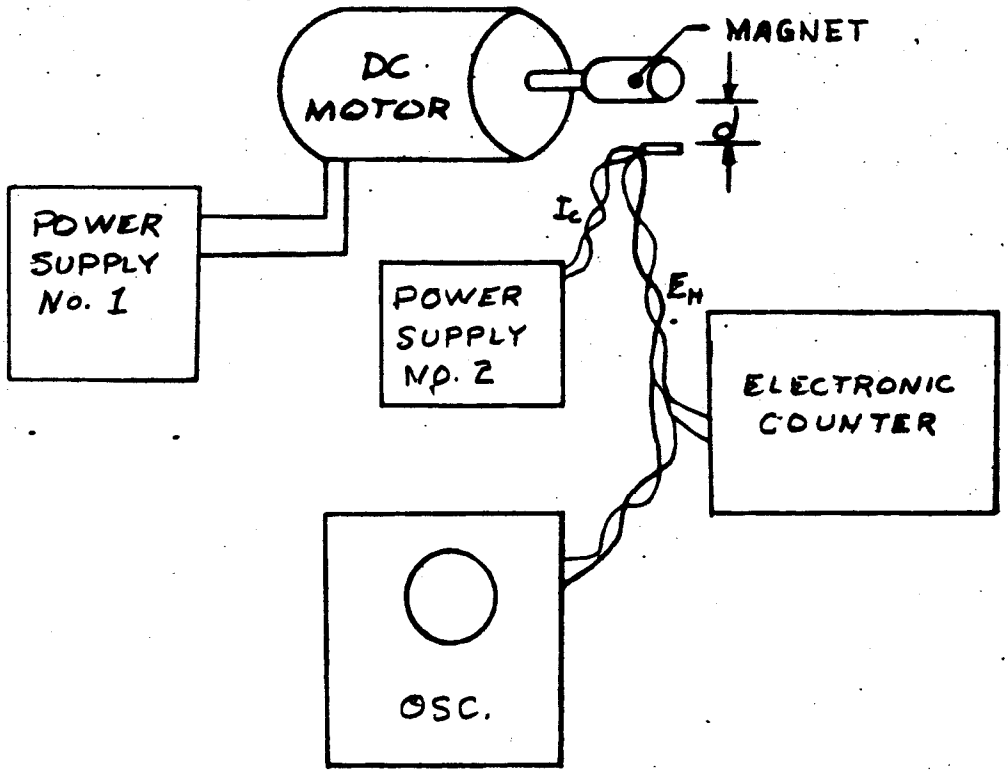


PS No 1 FLUKE Mod. 301E
PS No 2 TRYGON M36-15A
DC MOTOR DAYTON 2M037
ELECTRONIC COUNTER - BECKMAN 7370R
OSC. TEKTRONIX 545
MAGNET
PROBE BH-207
d 0.025 in.
$I_c$ 150 ma

| RPM | $E_H$ (mv) |
|---|---|
| 0 | 15.0 |
| 1000 | 16. |
| 2000 | 16. |
| 3000 | 14.5 |
| 4000 | — |
| 5000 | 14.5 |
| 6000 | 15.4 |
| 7000 | 14.5 |
| 8000 | 14.5 |
| | |

| | INITIALS | DATE | REV BY INITIALS | DATE | TITLE | MODEL |
|---|---|---|---|---|---|---|
| CALC | DZK | 2-4-66 | | | ANGULAR VELOCITY HALL VOLTAGE V.S. RPM | |
| CHECK | | | | | | |
| APPD. | | | | | | |
| APPD | | | | | | |

U3 4038 8000 REV 10-64

REV LTR

BOEING NO D5-13268-3
SH A-184

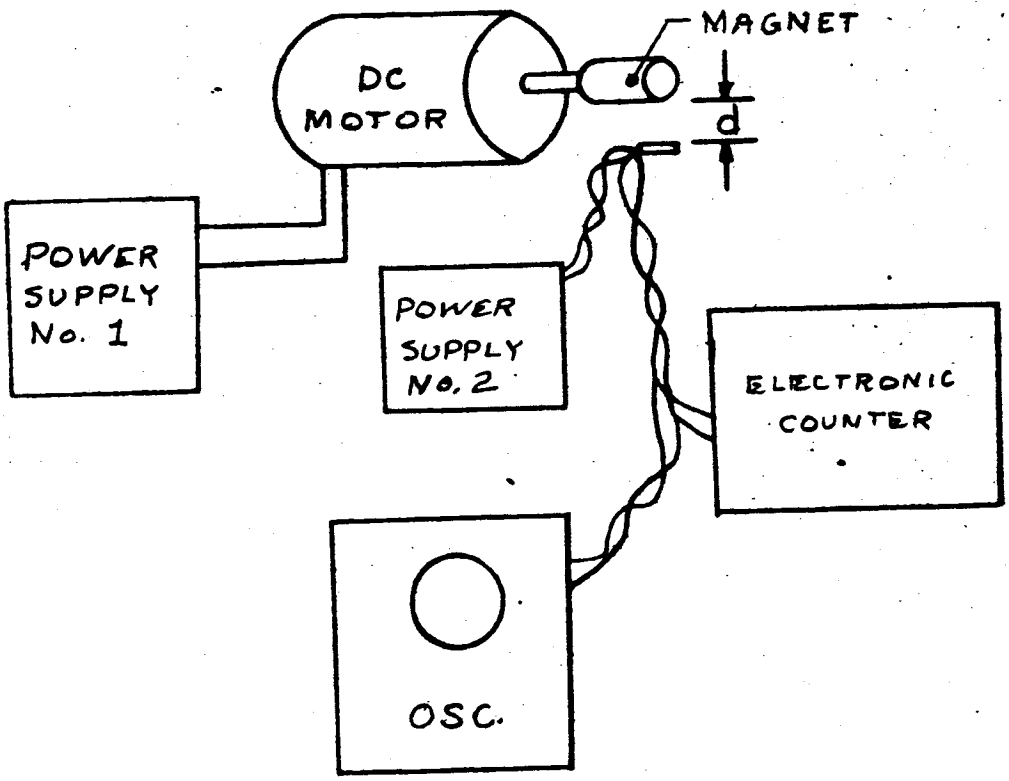


| | |
|---|---|
| PS No 1 | FLUKE Mod. 301E |
| PS No 2 | TRYGON M36-15A |
| DC MOTOR | DAYTON 2M037 |
| ELECTRONIC COUNTER | BECKMAN 7370R |
| OSC. | TEKTRONIX 545 |
| MAGNET PROBE | BH-200 |
| d | 0.018 in. |
| $I_c$ | 150 ma. |

| RPM | $E_H$ (mv) |
|---|---|
| 0 | 12 |
| 1500 | 12 |
| 3000 | 12 |
| 4500 | 12 |
| 6000 | 12 |
| 7500 | 12 |
| 9000 | 12 |
| | |
| | |
| | |

| | INITIALS | DATE | REV BY INITIALS | DATE | TITLE | MODEL |
|---|---|---|---|---|---|---|
| CALC | DZK | 2-24-66 | | | ANGULAR VELOCITY HALL VOLTAGE V.S. RPM | |
| CHECK | | | | | | |
| APPD. | | | | | | |
| APPD | | | | | | |

U3 4038 8000 REV 10 64

REV LTR

# SECTION 6

# RESONANT BEAM AND ULTRASONIC FLOWMETERS

# APPENDIX A

## SECTION 6

## ULTRASONIC AND RESONANT BEAM FLOWMETER

Data in this section is provided in support of the Ultrasonic Flowmeter Experiment and the Resonant Beam Flowmeter Experiment discussed in Sections 3.4 and 3.5 of Volume II of this report.

The majority of the data is related to the Ultrasonic FlowmeterExperiment, which seems most likely to produce a useful instrument.

RUN a.

LENGTH OF CLAMPED BEAM: 33.5 INCHES

TEST TUBE: .75 INCH OD

| FLOW VELOCITY fps | RELATIVE AMPLITUDE VOLTS [1] | FIRST MODE RESONANT FREQ. CPS |
|---|---|---|
| 1.4 | .6 | 103 |
| 3.7 | .8 | 103 |
| 6.6 | 1.0 | 103 |
| 9.9 | 1.0 | 103 |
| 13.2 | 2.0 | 103 |
| 16.5 | 4.0 | 103 |

RUN b.

LENGTH OF CLAMPED BEAM: 29.0 INCHES

TEST TUBE: .75 INCH OD

| FLOW VELOCITY fps | RELATIVE AMPLITUDE VOLTS [1] | FIRST MODE RESONANT FREQ. CPS |
|---|---|---|
| 1.3 | .08 | 148 |
| 3.5 | .08 | 148 |
| 6.3 | .1 | 148 |
| 9.3 | .2 | 148 |
| 12.5 | .35 | 148 |
| 16.5 | .35 | 148 |

NOTES:

[1] CONSIDERABLE VARIATION IN AMPLITUDE EXISTED DURING MEASUREMENT DUE TO BACKGROUND VIBRATION.

| | INITIALS | DATE | REV BY INITIALS | DATE | TITLE | MODEL |
|---|---|---|---|---|---|---|
| CALC | | | | | FIG. A-1 TEST DATA - RESONANT BEAM FLOWMETER | |
| CHECK | | | | | | |
| APPD. | | | | | | |
| APPD. | | | | | | |

U3 4038 8000 REV. 10-64

REV LTR

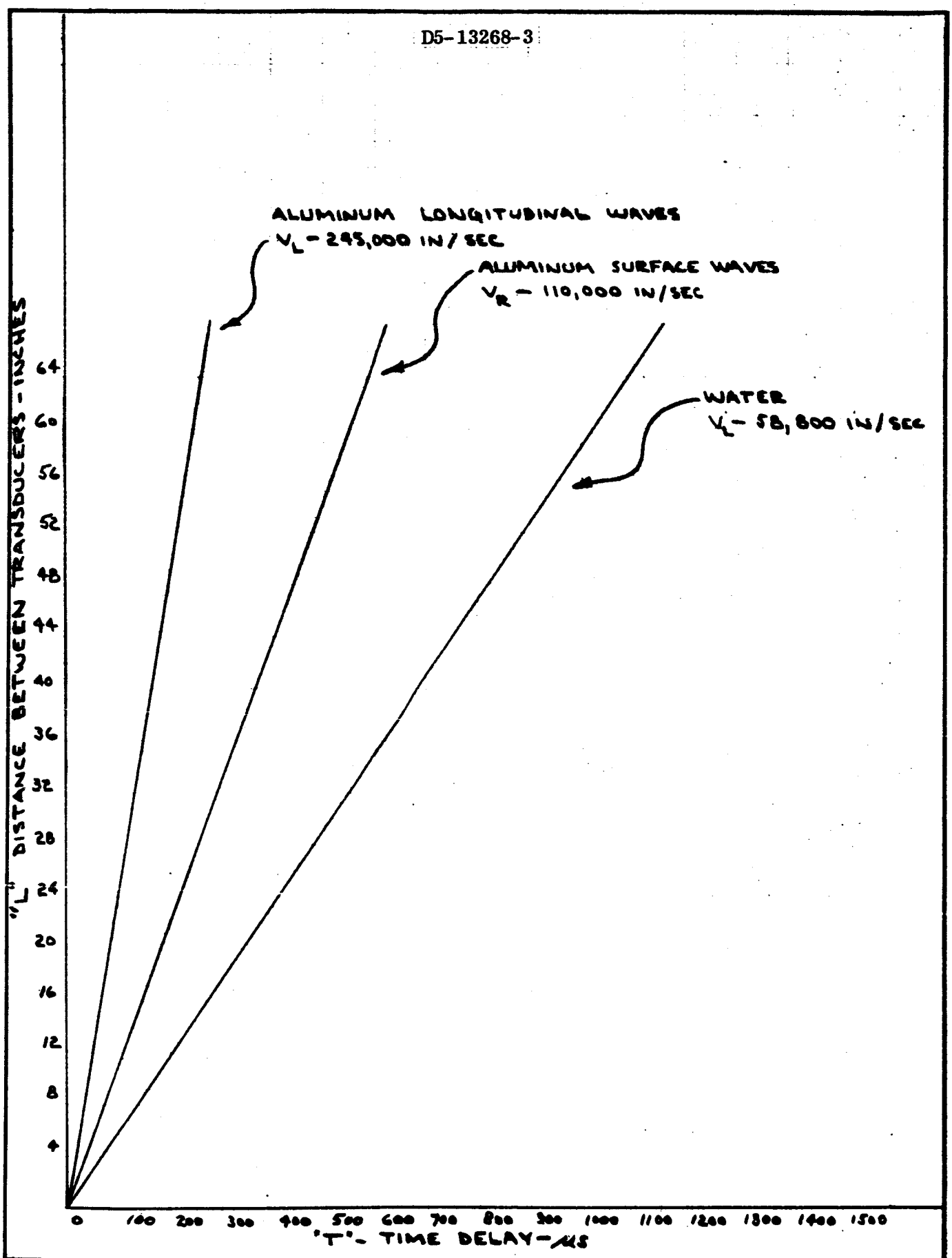


| CALC | | | REVISED | DATE | FIGURE A-2<br>TIME DELAY VS TRANSDUCER SPACING-ULTRASONIC FLOWMETER | |
|---|---|---|---|---|---|---|
| CHECK | | | | | | |
| APR | | | | | | |
| APR | | | | | | |
| | | | | | THE BOEING COMPANY | PAGE<br>A-189 |

US 4913 8000

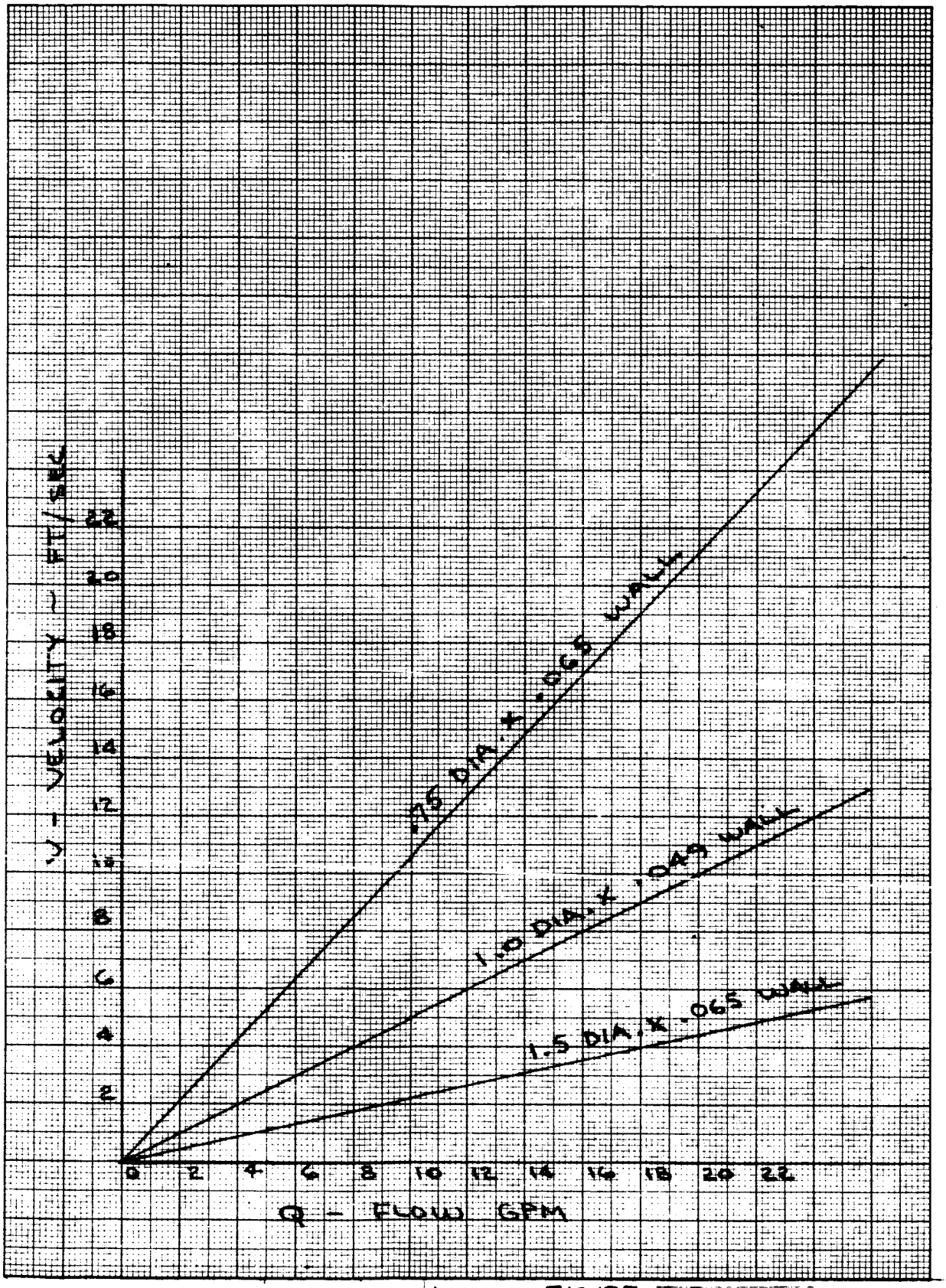


| | | |
|---|---|---|
| DRAWN | REVISED DATE | FIGURE A-3 |
| CHECK | | TUBE FLOW VELOCITY VS VOLUMETRIC FLOW-ULTRASONIC FLOWMETER |
| PR | | |
| APPR | | THE BOEING COMPANY SEATTLE 24 WASHINGTON |



CODEX BOOK COMPANY, INC. NORWOOD, MASSACHUSETTS. PRINTED IN U.S.A.
NO. 319. MILLIMETERS. 180 BY 220 DIVISIONS.

Pertinent IU Environmental Control
Requirements and Specifications

| | |
|---|---|
| Flowrate: | 7,800 lbs/hr (17.6 gal/min) [1] |
| Temperature: | +25°F to +100°F with +59°F nominal |
| Operating Pressure: | Inlet 15.8 to 16.9 psia |
| | total rise 28 psi |
| Service Media: | 40% by wt. demineralized water |
| | 60% by wt. methyl alcohol |
| Tubing: [2] | 1.00 inch x .049 inch wall, |
| | 6061-T6 AL Alloy Tube |
| Flow Velocity through 1.00 tube: | (8.8 ft/sec) [1] |

Notes:

[1] Calculated Values

[2] Section Upstream of Pump

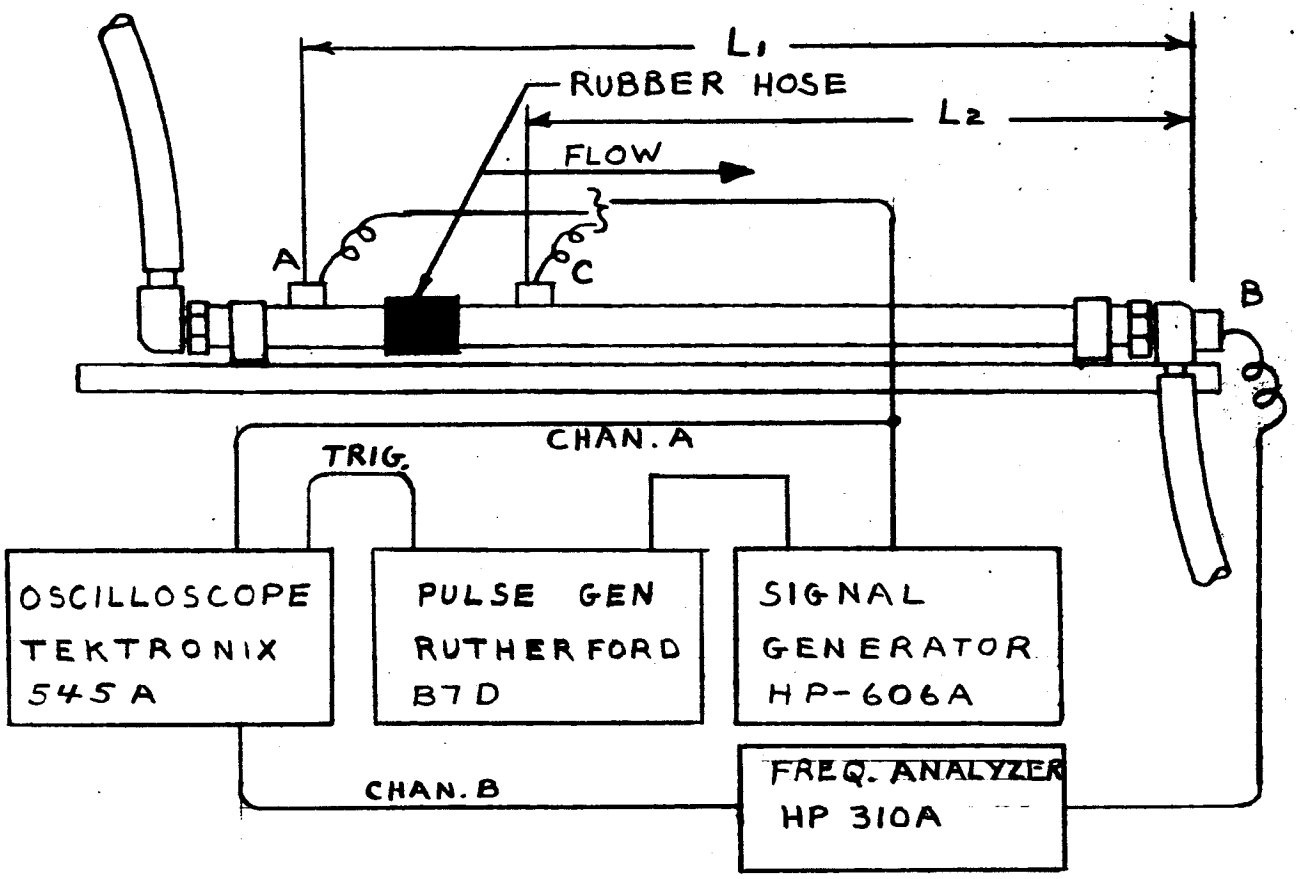


| RUN | TUBE OD-IN | "L1" INCHES | "L2" INCHES | TRANSMITTER CONFIG. | TRANSMITTER POSITION | RECEIVER CONFIG. | RECEIVER POSITION | TEST DATA |
|---|---|---|---|---|---|---|---|---|
| a | 1.5 | 43½ | | A | A | A | B | A-14 |
| b | 1.5 | | 21½ | A | C | A | B | A-14 |
| c | 1.5 | 40½ | | C | A | C | B | A-15 |
| d | 1.5 | | 29¼ | C | C | C | B | A-15 |
| e | .75 | 45 | | C | A | C | B | A-16 |
| f | .75 | | 32½ | C | C | C | B | A-16 |
| g | .75 | 45 | | B | A | B | B | A-17 |
| h | .75 | | 32 | B | C | B | B | A-17 |
| i | 1.5 | 43½ | | A | A | A | B | 18 |
| j | 1.5 | 43½ | | A | A | A | B | 18 |
| k | 1.5 | 43½ | | A | A | A | B | 19 |
| l | 1.5 | 43½ | | A | A | A | B | 19 |
| m | 1.5 | 43½ | | A | A | A | B | 20 |
| n | 1.5 | 43½ | | A | A | A | B | 20 |

1 SEE FIGURE 7 FOR TRANSDUCER CONIFIGURATION DETAILS

| | INITIALS | DATE | REV BY INITIALS | DATE | TITLE | MODEL |
|---|---|---|---|---|---|---|
| CALC | | | | | FIGURE A-13 TEST DATA - PRELIMINARY TESTS-ULTRASONIC FLOWMETER | |
| CHECK | | | | | | |
| APPD. | | | | | | |
| APPD. | | | | | | |

U3 4038 8000 REV 10-64

REV LTR

## RUN a

| FREQUENCY - KC | 70 | | | 190 | | | 270 | | |
|---|---|---|---|---|---|---|---|---|---|
| FLOW RATE fps | 0 | 2 | 3 | 0 | 2 | 3 | 0 | 2 | 3 |
| PULSE WIDTH - μs | 100 | → | | | | | | | |
| PRF - CPS | 200 | → | | | | | | | |
| SIGNAL DELAY - μs | 900 | → | | 850 | → | | 800 | → | |
| INDICATED SIGNAL PATH | | | | | | | | | |
| THRU WATER | ✓ | ✓ | ✓ | ✓ | ✓ | ✓ | ✓ | ✓ | ✓ |
| THRU TUBE | | | | | | | | | |
| TRANSMITTER LEVEL - dbm | +10 | → | | | | | | | |
| RECEIVER GAIN - db | 10 | 10 | 10 | 20 | 20 | 20 | 30 | 30 | 30 |
| RECEIVER OUTPUT - v | .7 | .8 | .7 | .6 | .6 | .4 | .15 | .15 | .1 |

## RUN b

| FREQUENCY - KC | 70 | | | 190 | | | 270 | | |
|---|---|---|---|---|---|---|---|---|---|
| FLOW RATE - fps | 0 | 2 | 3 | 0 | 2 | 3 | 0 | 2 | 3 |
| PULSE WIDTH - μs | 100 | → | | | | | | | |
| PRF - CPS | 200 | → | | | | | | | |
| SIGNAL DELAY - μs | 400 | → | | 450 | → | | 450 | → | |
| INDICATED SIGNAL PATH | | | | | | | | | |
| THRU WATER | | | | | | | | | |
| THRU TUBE | ✓ | ✓ | ✓ | ✓ | ✓ | ✓ | ✓ | ✓ | ✓ |
| TRANSMITTER LEVEL - dbm | +10 | → | | | | | | | |
| RECEIVER GAIN - db | 0 | 0 | 0 | 10 | 10 | 10 | 10 | 10 | 10 |
| RECEIVER OUTPUT - v | .7 | .7 | .7 | .6 | .6 | .58 | .55 | .5 | .7 |

| | INITIALS | DATE | REV BY INITIALS | DATE | TITLE | MODEL |
|---|---|---|---|---|---|---|
| CALC | | | | | FIGURE A-14 TEST DATA - PRELIMINARY TESTS - ULTRASONIC FLOWMETER | |
| CHECK | | | | | | |
| APPD. | | | | | | |
| APPD. | | | | | | |

U3 4038 8000 REV. 10-64

REV LTR

## RUN C

| FREQUENCY – KC | 71 | | | 92 | | | 225 | | |
|---|---|---|---|---|---|---|---|---|---|
| FLOW RATE – FPS | 0 | 2 | 3 | 0 | 2 | 3 | 0 | 2 | 3 |
| PULSE WIDTH – μs | 100 | → | | | | | | | |
| PRF – CPS | 200 | → | | | | | | | |
| SIGNAL DELAY – μs | 800 | → | | 800 | → | | 775 | → | |
| INDICATED SIGNAL PATH | | | | | | | | | |
| THRU WATER | ✓ | ✓ | ✓ | ✓ | ✓ | ✓ | ✓ | ✓ | ✓ |
| THRU TUBE | | | | | | | | | |
| TRANSMITTER LEVEL – dbm | +10 | → | | | | | | | |
| RECEIVER GAIN – db | 20 | 20 | 20 | 20 | 20 | 20 | 30 | 30 | 30 |
| RECEIVER OUTPUT – v | .6 | .6 | .6 | 1.6 | 1.5 | 1.5 | .8 | 1.2 | 1.2 |

## RUN d

| FREQUENCY – KC | 71 | | | 92 | | | 225 | | |
|---|---|---|---|---|---|---|---|---|---|
| FLOW RATE – fps | 0 | 2 | 3 | 0 | 2 | 3 | 0 | 2 | 3 |
| PULSE WIDTH – μs | 100 | → | | | | | | | |
| PRF – CPS | 200 | → | | | | | | | |
| SIGNAL DELAY – μs | 450 | → | | 400 | → | | 300 | → | |
| INDICATED SIGNAL PATH | | | | | | | | | |
| THRU WATER | | | | | | | | | |
| THRU TUBE | ✓ | ✓ | ✓ | ✓ | ✓ | ✓ | ✓ | ✓ | ✓ |
| TRANSMITTER LEVEL dbm | +10 | → | | | | | | | |
| RECEIVER GAIN – db | 0 | 0 | 0 | 0 | 0 | 0 | 0 | 0 | 0 |
| RECEIVER OUTPUT – v | 1.5 | 1.5 | 1.5 | 1.3 | 1.5 | 1.2 | .4 | .3 | .2 |

| | INITIALS | DATE | REV BY INITIALS | DATE | TITLE | MODEL |
|---|---|---|---|---|---|---|
| CALC | | | | | FIGURE A-15 TEST DATA – PRELIMINARY TESTS – ULTRASONIC FLOWMETER | |
| CHECK | | | | | | |
| APPD. | | | | | | |
| APPD. | | | | | | |

U3 4038 8000 REV. 10-64

REV LTR

## RUN e

| FREQUENCY - KC | 80 | | | 96 | | | 210 | | |
|---|---|---|---|---|---|---|---|---|---|
| FLOW RATE - fps | 0 | 6 | 12 | 0 | 6 | 12 | 0 | 6 | 12 |
| PULSE WIDTH - μs | 100 | → | | | | | | | → |
| PRF CPS | 200 | → | | | | | | | → |
| SIGNAL DELAY - μs | 700 | → | → | 600 | → | → | 375 | → | → |
| INDICATED SIGNAL PATH | | | | | | | | | |
| THRU WATER | ✓ | ✓ | ✓ | ✓ | ✓ | ✓ | | | |
| THRU TUBE | | | | | | | ✓ | ✓ | ✓ |
| TRANSMITTER LEVEL - dbm | +10 | → | | | | | | | → |
| RECEIVER GAIN - db | 0 | → | | | | | | | → |
| RECEIVER OUTPUT - v | .09 | .09 | .09 | .07 | .07 | .07 | .01 | .01 | .01 |

## RUN f

| FREQUENCY - KC | 80 | | | 96 | | | 210 | | |
|---|---|---|---|---|---|---|---|---|---|
| FLOW RATE - fps | 0 | 6 | 12 | 0 | 6 | 12 | 0 | 6 | 12 |
| PULSE WIDTH - μs | 100 | → | | | | | | | → |
| PRF - CPS | 200 | → | | | | | | | → |
| SIGNAL DELAY - μs | 400 | → | → | 300 | → | → | 220 | → | → |
| INDICATED SIGNAL PATH | | | | | | | | | |
| THRU WATER | | | | | | | | | |
| THRU TUBE | ✓ | ✓ | ✓ | ✓ | ✓ | ✓ | ✓ | ✓ | ✓ |
| TRANSMITTER LEVEL - dbm | +10 | → | | | | | | | → |
| RECEIVER GAIN - db | 0 | → | | | | | | | → |
| RECEIVER OUTPUT - v | 1.7 | 1.7 | 1.7 | .8 | .8 | .8 | .95 | .95 | .95 |

| | INITIALS | DATE | REV BY INITIALS | DATE | TITLE | MODEL |
|---|---|---|---|---|---|---|
| CALC | | | | | FIGURE A-16 TEST DATA - PRELIMINARY TESTS - ULTRASONIC FLOWMETER | |
| CHECK | | | | | | |
| APPD. | | | | | | |
| APPD. | | | | | | |

U3 4038 8000 REV. 10-64

REV LTR

## RUN g

| FREQUENCY - KC | 50 | | | 80 | | | | | |
|---|---|---|---|---|---|---|---|---|---|
| FLOW RATE - fps | 0 | 6 | 12 | 0 | 6 | 12 | | | |
| PULSE WIDTH - μs | 100 | → | | | | | | | |
| PRF - CPS | 200 | → | | | | | | | |
| SIGNAL DELAY - μs | 900 | → | | 900 | → | | | | |
| INDICATED SIGNAL PATH | | | | | | | | | |
| THRU WATER | ✓ | ✓ | ✓ | ✓ | ✓ | ✓ | | | |
| THRU TUBE | | | | | | | | | |
| TRANSMITTER LEVEL - dbm | +10 | → | | | | | | | |
| RECEIVER GAIN - db | 0 | → | | | | | | | |
| RECEIVER OUTPUT - v | .4 | .4 | .4 | .16 | .16 | .16 | | | |

## RUN h

| FREQUENCY - kc | 50 | | | 80 | | | | | |
|---|---|---|---|---|---|---|---|---|---|
| FLOW RATE - fps | 0 | 6 | 12 | 0 | 6 | 12 | | | |
| PULSE WIDTH - μs | 100 | → | | | | | | | |
| PRF - CFS | 200 | → | | | | | | | |
| SIGNAL DELAY μs | 250 | → | | 250 | → | | | | |
| INDICATED SIGNAL PATH | | | | | | | | | |
| THRU WATER | | | | | | | | | |
| THRU TUBE | ✓ | ✓ | ✓ | ✓ | ✓ | ✓ | | | |
| TRANSMITTER LEVEL - dbm | +10 | → | | | | | | | |
| RECEIVER GAIN - db | 0 | → | | | | | | | |
| RECEIVER OUTPUT - v | .5 | .5 | .5 | 1.5 | 1.5 | 1.5 | | | |

| | INITIALS | DATE | REV BY INITIALS | DATE | TITLE | MODEL |
|---|---|---|---|---|---|---|
| CALC | | | | | FIGURE A-17 TEST DATA - PRELIMINARY TESTS - ULTRASONIC FLOWMETER | |
| CHECK | | | | | | |
| APPD. | | | | | | |
| APPD. | | | | | | |

U3 4038 8000 REV. 10-64

REV LTR

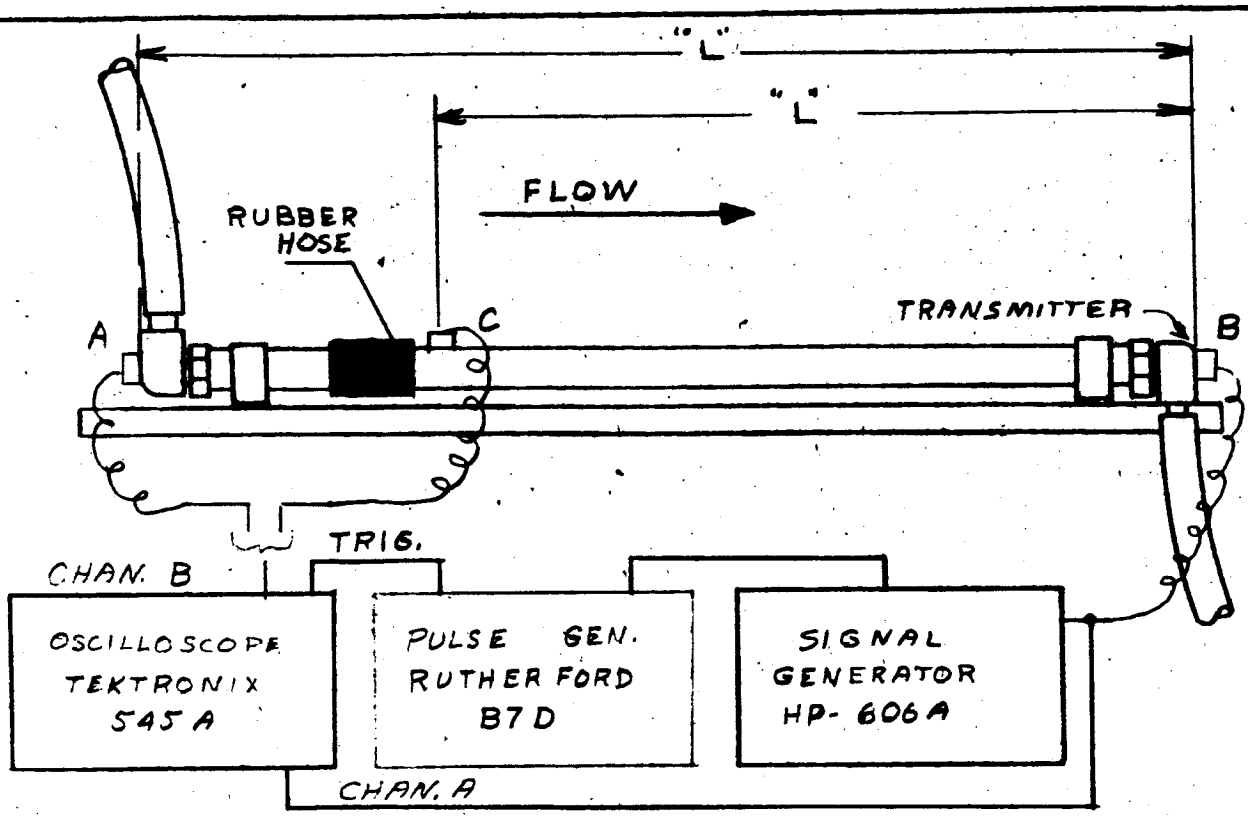


TUBE: 1.5" OD
TRANSDUCERS: CONF. "C" [1]

| RUN | REC. POSITION | "L" INCHES | FREQ. KC | FLOW VEL-FPS | REC. AMP. v | CALCULATED DELAY μ SEC | OBSERVED DELAY μ SEC | REMARKS | |
|---|---|---|---|---|---|---|---|---|---|
| a | A | 64 3/4 | 81 | 2 | .28 | 1100 | 1100 | | |
| b | A | 64 3/4 | 219 | 2 | .04 | 1100 | 1100 | | |
| c | C | 43 | 81 | 0 | .15 | 740 | 800 | | |
| d | C | 35 1/2 | 81 | 0 | .20 | 610 | 625 | SEE FIG. | 22 |
| e | C | 35 1/2 | 219 | 0 | .08 | 610 | 225 | " " | 23 |
| f | C | 35 1/2 | 81 | 3 | .20 | 610 | 625 | " " | 24 |
| g | C | 28 | 81 | 0 | .20 | 480 | 500 | | |

[1] SEE FIGURE 7 FOR TRANSDUCER CONFIGURATION DETAILS.

| | INITIALS | DATE | REV BY INITIALS | DATE | TITLE | MODEL |
|---|---|---|---|---|---|---|
| CALC | | | | | FIGURE A-21 TEST DATA-ADDITIONAL SIGNAL IDENTIFICATION-ULTRASONIC FLOWMETER | |
| CHECK | | | | | | |
| APPD. | | | | | | |
| APPD. | | | | | | |

U3 4038 8000 REV 10-64

REV LTR

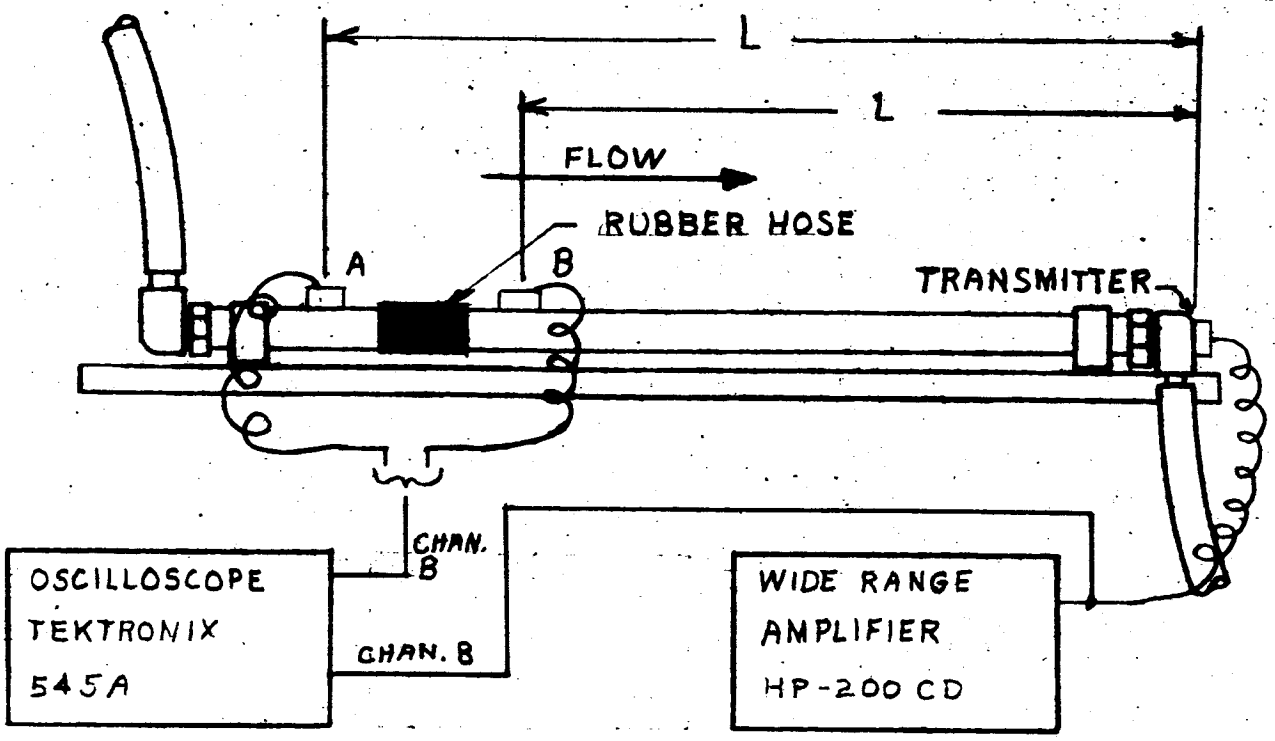


TEST CONF. I
TEST TUBE: 1.50" OD
TRANSDUCERS: CONF. "C" [1]

| RUN | REC. POSITION | "L" INCHES | FREQ KC | FLOW VEL. FPS | SHIFT DEG. | REMARKS | | | |
|---|---|---|---|---|---|---|---|---|---|
| a | A | 56 | 85 | 0 | 0 | SEE FIG 28 | | | |
| b | A | 56 | 85 | 2 | 6 | " | " 28 | | |
| c | A | 56 | 85 | 2.8 | 10 | " | " 28 | | |
| d | B | 42 1/4 | 90 | 0 | 0 | " | " 29 | | |
| e | B | 42 1/4 | 90 | 2 | 4 | " | " 29 | | |
| f | B | 42 1/4 | 90 | 2.6 | 8 | " | " 29 | | |

[1] SEE FIGURE 7 FOR TRANSDUCER CONFIGURATION DETAILS

| | INITIALS | DATE | REV BY INITIALS | DATE | TITLE | MODEL |
|---|---|---|---|---|---|---|
| CALC | | | | | FIGURE A-31 TEST DATA - PHASE SHIFT DETECTION, CW-ULTRASONIC FLOWMETER | |
| CHECK | | | | | | |
| APPD. | | | | | | |
| APPD. | | | | | | |

U3 4038 8000 REV 10-64

REV LTR

BOEING NO. D5-13268-3

SH. A-198