NASA CR 54994
WCAP 2870

N66 32629

(ACCESSION NUMBER)	(THRU)
89	1
(PAGES)	(CODE)
CR-54994	22
(NASA CR OR TMX OR AD NUMBER)	(CATEGORY)

FACILITY FORM 602

TEST AND ANALYSIS OF A MANIFOLD AND RE-ENTRANT TUBE ASSEMBLY

Task 3A
FEASIBILITY OF A CHEMICAL POISON LOOP SYSTEM

by

F. C. ENGEL

A. A. BISHOP

GPO PRICE $ _____

CFSTI PRICE(S) $ _____

Hard copy (HC) 2.50

Microfiche (MF) .75

ff 653 July 65

prepared for

NATIONAL AERONAUTICS AND SPACE ADMINISTRATION
CONTRACT NAS 3 - 5215

WESTINGHOUSE ELECTRIC CORPORATION
ATOMIC POWER DIVISIONS

NOTICE

This report was prepared as an account of Government sponsored work. Neither the United States, nor the National Aeronautics and Space Administration (NASA), nor any person acting on behalf of NASA:

A.) Makes any warranty or representation, expressed or implied, with respect to the accuracy, completeness, or usefulness of the information contained in this report, or that the use of any information, apparatus, method, or process disclosed in this report may not infringe privately owned rights; or

B.) Assumes any liabilities with respect to the use of, or for damages resulting from the use of any information, apparatus, method or process disclosed in this report.

As used above, "person acting on behalf of NASA" includes any employee or contractor of NASA, or employee of such contractor, to the extent that such employee or contractor of NASA, or employee of such contractor prepares, disseminates, or provides access to, any information pursuant to his employment or contract with NASA, or his employment with such contractor.

Requests for copies of this report should be referred to

National Aeronautics and Space Administration
Office of Scientific and Technical Information
Attention: AFSS-A
Washington, D.C. 20546

NASA - CR - 54994
WCAP - 2870

TEST AND ANALYSIS OF A MANIFOLD AND RE-ENTRANT TUBE ASSEMBLY

Task 3A
FEASIBILITY OF A CHEMICAL POISON LOOP SYSTEM

by
F. C. ENGEL
A. A. BISHOP

prepared for

NATIONAL AERONAUTICS AND SPACE ADMINISTRATION
CONTRACT NAS 3 - 5215

WESTINGHOUSE ELECTRIC CORPORATION
ATOMIC POWER DIVISIONS

NASA CR-54994
WCAP-2870

SUMMARY REPORT

TEST AND ANALYSIS OF DESIGN OF A MANIFOLD AND REENTRANT TUBE ASSEMBLY

Task 3A

FEASIBILITY OF A CHEMICAL POISON LOOP SYSTEM

by

F. C. ENGEL
A. A. BISHOP

Prepared for

NATIONAL AERONAUTICS AND SPACE ADMINISTRATION

JULY 1966

CONTRACT NAS3-5215

TECHNICAL MANAGEMENT
NASA LEWIS RESEARCH CENTER
CLEVELAND, OHIO
REACTOR APPLICATIONS BRANCH
NUCLEAR SYSTEMS DIVISION
M. H. KRASNER

WESTINGHOUSE ELECTRIC CORPORATION
ATOMIC POWER DIVISIONS
BOX 355
PITTSBURGH, PENNSYLVANIA 15230

TABLE OF CONTENTS

		Page No.
LIST OF FIGURES		ii
LIST OF TABLES		iv
I.	ABSTRACT	1
II.	SUMMARY	2
III.	INTRODUCTION	4
IV.	MODEL DESIGN AND OPERATION	10
	A. Model Design	10
	B. Instrumentation and Calibration	18
	1. Flow Distribution	18
	2. Concentration Distribution	18
V.	TEST RESULTS AND ANALYSIS	26
	A. Flow Distribution Tests	26
	1. Mechanical Design Modifications	26
	2. Piping Connections Modifications	26
	3. Manifold Component Modifications	26
	B. Concentration Distribution Tests	31
APPENDIX A	DIGITAL COMPUTER PROGRAM "MATE"	47
APPENDIX B	CAVITATION IN INLET ELBOWS	69
APPENDIX C	DERIVATION AND USE OF MIXING LENGTH	71
APPENDIX D	REFERENCES	74

List of Figures

Figure No.	Title	Page No.
III - 1	Chemical Poison Loop System - Flow Diagram	5
III - 2	Manifold-Reentrant Tube Assembly	6
III - 3	Principal Poison Tube Parameters	8
IV - 1	Manifold-Reentrant Tube Assembly - Plexiglas Model	11
IV - 2	Manifold Model Flow Tests - Manifold Pressure Top Locations	12
IV - 3	Top View, Manifold-Poison Tube Assembly Plexiglas Flow Model	14
IV - 4	Bottom View, Manifold-Poison Tube Assembly Plexiglas Flow Model	15
IV - 5	Manifold Plates Prior to Assembly	16
IV - 6	CPLS Flow Model Testing Facility	17
IV - 7	Assembly of Pitot Tubes and Conductivity Probes to Bottom End of Tubes	19
IV - 8	Manometer Board	20
IV - 9	Typical Flow Record	21
IV - 10	Concentration of Pumped Solution mg/cc-$NaCl/H_2O$ Conductivity Probe Calibration	23
IV - 11	Visicorder Readout for Conductivity Probes	24
IV - 12	Typical Visicorder Trace	25
V - 1	Static Pressure Distribution in Inlet and Outlet Plenum	30
V - 2	Data Plot, 300 gpm, Time to Bottom of Tubes	33

List of Figures (Continued)

V - 3	Data Plot, 400 gpm, Time to Bottom of Tubes	34
V - 4	Data Plot, 175 gpm, Time to Bottom of Tubes	35
V - 5	Data Plot, 602 gpm, Time to Bottom of Tubes	36
V - 6	Data Plot, 602 gpm, Time to Top of Tubes (Inferred)	39
V - 7	Arrival Times at Minimum and Average Locations	40
V - 8	Solution Injection Tests	41
V - 9	Change in Concentration vs. Time After Solenoid Valve Opening	42
V - 10	Location of Concentration Change in Tubes vs. Time After Solenoid Valve Constant Injection Rate	44
V - 11	Extent of Completion of Concentration Change in the Tubes Inside the Core vs. Time After Opening of the Injection Valve	45

List of Tables

Table No.	Title	Page No.
V - 1	Test Results, Flow Distribution	28
V - 2	Test Results, Concentration Distribution	32
V - 3	Comparison of Time of Arrival of Injected Salt Solution at the Bottom of Tubes	38

SUMMARY REPORT

TEST AND ANALYSIS OF DESIGN OF A MANIFOLD AND REENTRANT TUBE ASSEMBLY

Task 3A

FEASIBILITY OF A CHEMICAL POISON LOOP SYSTEM

by

F. C. Engel
A. A. Bishop

3 2629

I. ABSTRACT

An analytical and experimental model study was performed of a manifold and re-entrant tube chemical poison distribution system which are part of a rocket reactor control loop. The system operates by changing the concentration of the poison (cadmium sulfate) in a water solution circulating through a large number (198) of parallel tubes which project from a manifold into the core. In order to meet the specifications that (1) the flow rate through all the tubes be uniform, (2) the injected chemical poison arrive at the top of the core within 0.2 second and (3) the chemical solution concentration variation throughout the core should be within $\pm$ 5%, a special manifold and re-entrant tube assembly was designed and a full size flow model was constructed of plexiglas and a series of tests performed to prove the design.

II. SUMMARY

In order to establish the feasibility of utilizing a Chemical Poison Loop System (CPLS) for the reactivity control of a Tungsten Water-Moderated Rocket Reactor (TWMR), a poison control tube and manifold system must be designed. The performance requirements of these components are based on variation in poison concentration and velocity in the many control tubes and on the time required for changes of poison concentration to occur in the core.

The design of these components was carried out by Westinghouse Atomic Power Division under contract to NASA Lewis Research Center and is reported in references 1 and 2. As part of the same contract, a full scale plexiglas model of the reference design was built for the purposes of checking its performance. Single phase flow distribution and solution injection and distribution tests were carried out. Pressure distribution was measured to evaluate velocities and concentration measurements were made to determine time delays and poison distribution.

The plexiglas model was used in conjunction with a flow system in which total flow rate could be varied. A poison injection system was included in the flow system which allowed tests of distribution during various transients.

The test results were evaluated and compared with the design requirements and the results of the analysis. At full flow the injected poison reaches the top of nearly 18% of the 198 tubes in the reference design in less than 0.20 seconds. With a steady injection rate and full flow, the poison solution concentration in the core region reaches the end of its first transient in approximately 1.9 seconds. This is less than one circuit time through the reference design control solution loop. The maximum variation in concentration among tubes during the transient exists between a tube which was already gone through the transient and one that has not yet started the transient. For normal operation solution concentration and design rates of change in reactivity, this variation is much lower than the 5% permissible. For the xenon override solution concentration, the 5% limit is exceeded during the beginning of the transient.

Tests indicate that the flow distribution among the 198 parallel tubes is satisfactorily uniform. The variations which did exist were random and not attributable to any known design characteristic or dimensional variation. The uniformity of flow distribution did not vary significantly over a flow range of 100 to 600 gpm. The mean deviation from the average over this range varied from 6.8% to 5.3%.

The technique used to design the manifold for uniform flow distribution was substantiated. Only minor changes in the original configuration were required to achieve a satisfactory configuration. The total pressure drop, 90 psi, measured during the test was about 12% higher than the predicted value. This is due in a large part to the insertion of a flow straightening screen added to the system.

For single phase flow it appears that the reference design as modified during the test will meet the requirements. It also appears that the design techniques used for achieving uniform flow in this rather complex system are fairly reliable. Further two phase analysis and testing would be required should it be shown later that significant quantities of undissolved gas could be developed and retained in the system.

III. INTRODUCTION

The reference method of reactivity control of the Tungsten-Water Moderated Reactor is accomplished by means of controlling the concentration of a nuclear poisoning material in a solution flowing through the reactor core. The principle of control would be to add sufficient quantities of a high cross section chemical to the system when a reduction in reactivity is required, such as at shutdown, and to remove this chemical when additional reactivity is needed, such as at startup. A feasibility study was undertaken to design and test a system capable of accomplishing these tasks. This system, the Chemical Poison Loop System (CPLS) is shown in schematic form in Figure III-1.

The brief system description provided below is included only to help enumerate the conditions to which the chemical solution and containing system will be subjected. More detailed discussions can be found in the feasibility study task reports published by WAPD. /1,2

> Solution is continually flowing through the primary piping and through the in-core tubes. When poison is required, the solenoid valve in the pressurized poison reservoir is opened, and concentrated poison solution is injected into the primary flow stream until the solution cross-section reaches the desired level. When poison must be removed from the system, the solenoid valve in the ion-exchange line opens, allowing solution to flow through this system and back again to the primary lines. The poison is removed from solution in the exchanger until the solution in the in-core tubes has been reduced in cross section to the desired level. Additional components included a system pressurizer, a main-circulating pump, a loop cooler, a distribution manifold and the required temperature, pressure and flow recording and controlling devices. Nominal loop operating conditions are 600 psia pressure, 125°F manifold inlet temperature, and 600 gpm circulating flow rate.

The principal function of the control tube and distribution manifold assembly is to distribute the solution in the reactor core in a uniform manner with a minimum loop circuit time. The manifold is located in the upper gas space of the reactor, Figure III-2. At full power operation para-hydrogen at -175°F and 600 psi pressure flows through this space. Full power operation is limited to 1 to 10 hours duration, however, extended periods of operation during after-heat removal are planned. The upper portion of the 198 control tubes is also surrounded by hydrogen. The part below the bulkhead is surrounded by moderator water at an average temperature of 205°F. There is considerable heat generation in the poison solution and the tube walls due to attenuation of gamma and neutron radiation. This heat must be removed from the solution so that steady state operation can be maintained. Without auxiliary cooling only about 10% of the heat load can be transferred to the hydrogen across the walls inside the reactor pressure vessel and therefore an additional heat exchanger is required.

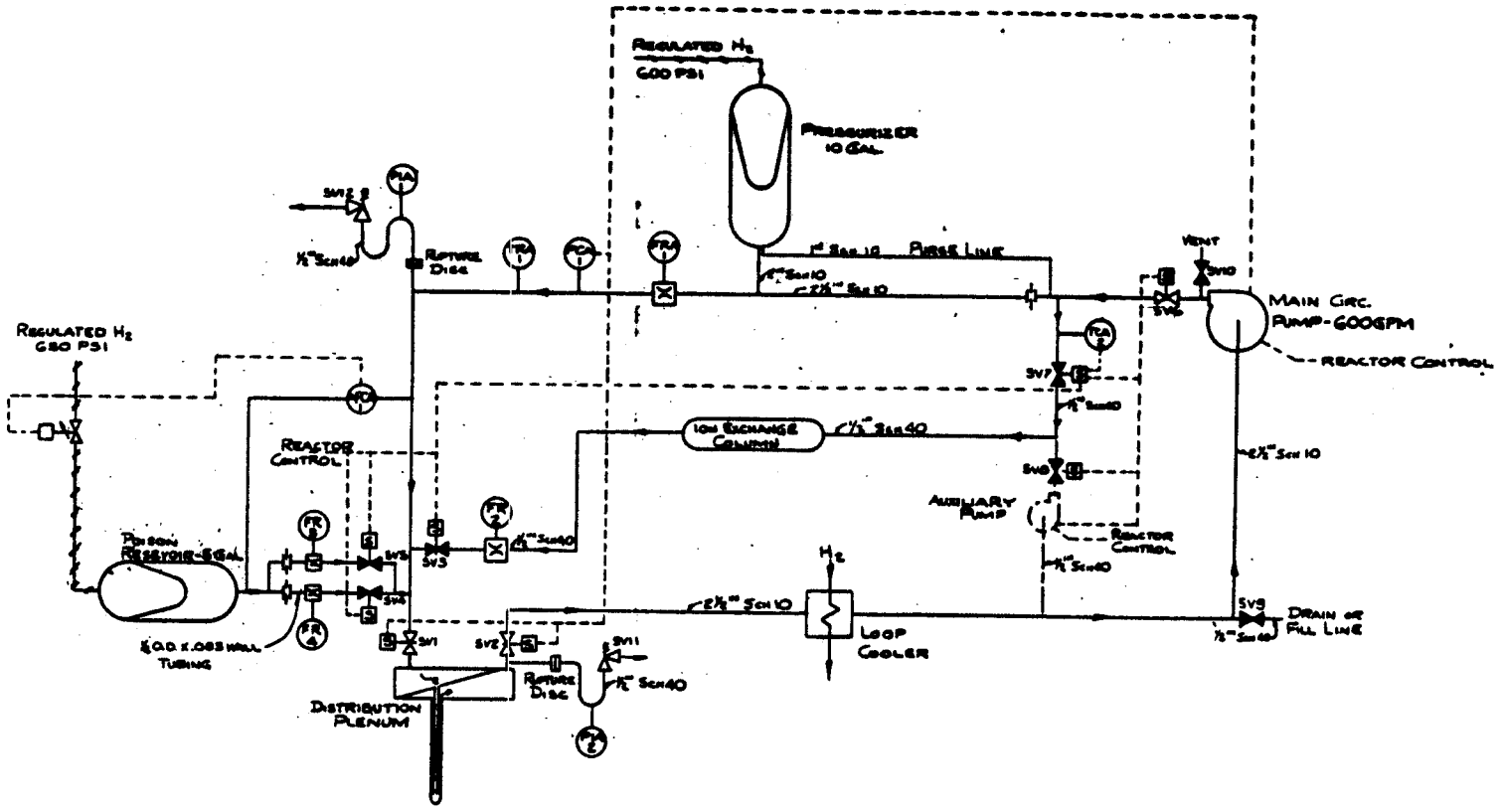

Figure III.1

Chemical Poison Loop System
Flow Diagram

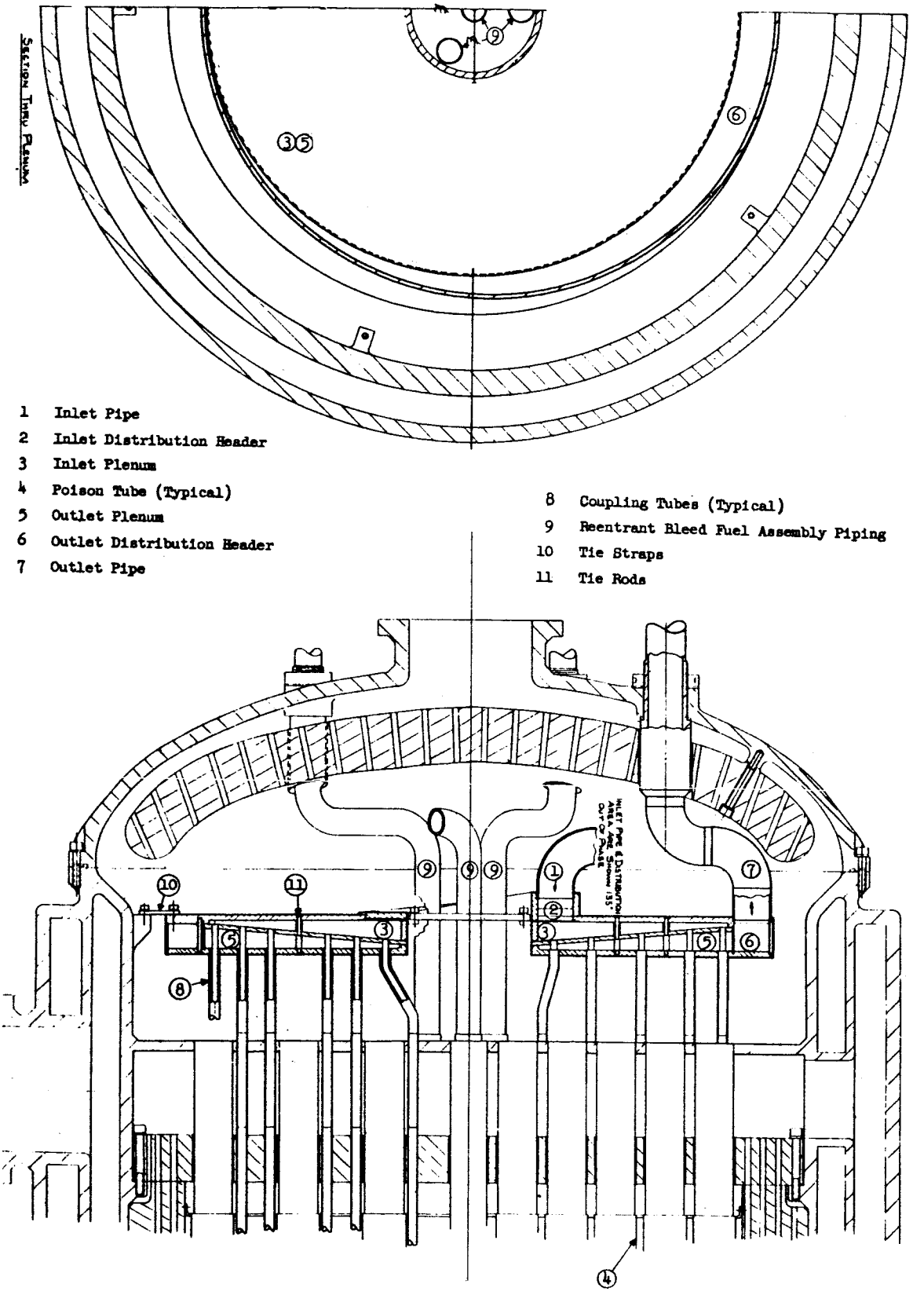

Figure III-2

FdSK 282356J

Manifold-Reentrant Tube Assembly

The Reference Design evolved during the study is shown in Figure III-2. In this design the single inlet pipe is connected to the distribution manifold close to the central hole in the manifold provided for passage of the re-entrant bleed fuel assembly piping. The CPLS inlet pipe feeds into an inlet distribution header designed to provide uniform flow of the poison solution to the inlet plenum. The inlet plenum distributes the poison solution radially outward to the re-entrant tube inlets. The plenum height decreases towards its outer diameter in order to maintain a sufficiently high solution velocity as the flow decreases. After passing through the re-entrant poison tubes, the poison solution passes into an outlet plenum. The height of this plenum increases towards its outer diameter, where the solution enters an outlet distribution header and is transported to the single outlet pipe. Both the outlet and the inlet header have flow-cross sections whose dimensions vary with the through-put rate in order to maintain uniform poison solution velocities.

The manifold rests on coupling tubes which are supported by the reactor inlet tube sheet. Five tie straps are provided for laterally bracing the plena and tube assembly to the reactor vessel. The manifold plates are braced internally by a series of tie rods to permit the use of a minimum plate thickness. Penetration through the pressure vessel of the inlet-outlet lines to the manifold are made through flexible couplings. The poison tubes are sized to give the same down- and up-flow areas. Principal poison tube parameters are given in Figure III-3.

The purpose of the overall study was to design a device for supplying equal flow to 198 identical re-entrant parallel tubes arranged in a specified array. One way to achieve this objective is to make certain that the pressure drop across each path is the same. The static pressure in a manifold of uniform cross section decreases along the length because the flowing mass is being reduced by out-flow to the re-entrant tubes. Thus out-flow is not uniform. To maintain the same pressure level throughout, the manifold requires a special design to keep the velocity constant or increasing to overcome the frictional pressure drop. The manifold shape selected to accomplish this criterion can be calculated using a modification of a method proposed by Acrivos, et al/3 which is simply a solution to the combined single phase continuity and momentum equations for the system. The flow is considered to be incompressible and the energy additions are not considered to influence significantly the flow distribution. The designs of the headers and the plenums were calculated. However, the theoretical contours could be approximated closely enough by linear reduction of the height of the inlet and outlet plenums and inlet header or the width of the outlet header. The design analysis discussed in greater detail in NASA CR-54420 (WCAP-2803).

The purpose of the model study discussed in this report was to demonstrate that uniform flow can be maintained in all 198 poison tubes, that the injected concentrate will reach the core within the specified time of 0.2 seconds and that a concentration maldistribution greater than $\pm$ 5% does not exist among tubes. The four major parts of the chemical poison system design analyzed by the Thermal and Hydraulic Development Group at APD were related to the design of the plenum and were:

INLET SOLUTION TEMPERATURE (^oF)	125
FLOW AREA DOWNCOMER (FT^2)	.000630
VELOCITY IN DOWNCOMER (FT/SEC.)	10
MASS VELOCITY IN DOWNCOMER ($LB/HR\text{-}FT^2$)	2.48×10^6
FLOW AREA UPCOMER (FT^2)	.000630
VELOCITY IN UPCOMER (FT/SEC)	10
MASS VELOCITY IN DOWNCOMER ($LB/HR\text{-}FT^2$)	2.48×10^6
SPECIFIC WEIGHT (LB/FT^3)	68.3
PRESSURE (PSIA)	600
EQUIVALENT DIA DOWNCOMER (FT)	0.0283
EQUIVALENT DIA UPCOMER (FT)	0.0111
TUBE LENGTH, TOTAL (IN)	52
TUBE LENGTH, IN-CORE (IN)	36

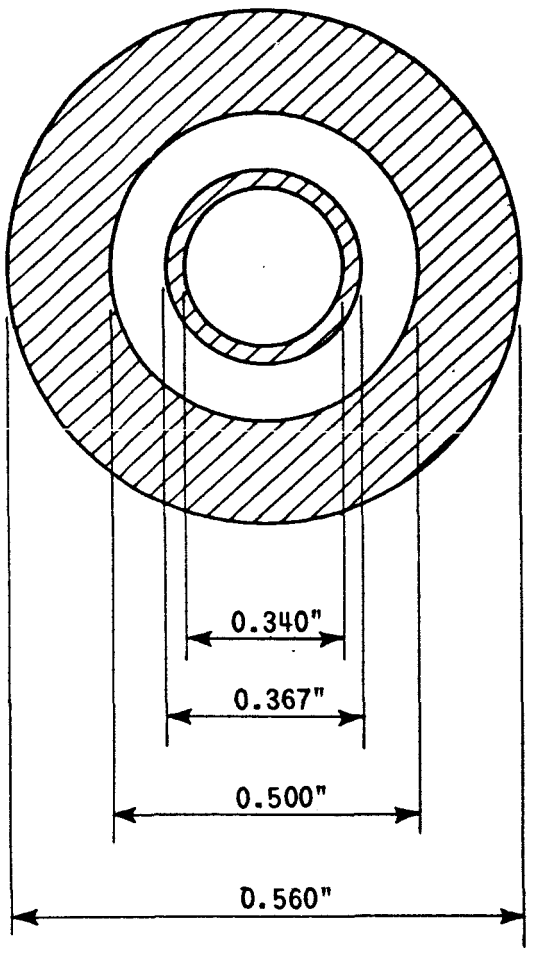

Figure III-3

Principal Poison Tube Parameters

1. Design of a plenum and re-entrant tube assembly for distribution of chemical poison solution.

2. Achievement of uniform flow distributions among the tubes.

3. Timing and control of concentration changes.

4. Heat removal required to maintain desired fluid and metal temperatures.

A full scale model of the manifold and the 198 poison tubes in their hexagonal array was constructed of plexiglas for low pressure and room temperature flow distribution and solution injection tests. Plexiglas was used to obtain a visual history of chemical concentration and flow distribution during steady state and transient single and two-phase tests. The tests were conducted in a hydraulic facility at WAPD; parallel programs of evaluation of materials and total system response tests were also conducted. The purpose and scope of all the test efforts were reported on in References 1 and 2.

IV. MODEL DESIGN AND OPERATION

A. Model Design

The model was constructed using the plexiglass so that flow and concentration patterns could be made visible by gas or dye injection. The walls were designed to withstand a calculated pressure drop of 100 psi. All internal dimensions of the model were those determined by the flow distribution analysis for the prototype, except the inlet and outlet piping nipples which had a minimum throat of 2-1/8 inch I.D. rather than the 2-1/4 inch of the prototype. Some breakage of the threads of the outer tubes was experienced and metal nipples were substituted at the upper junction where the tubes were threaded into the manifold plate.

The original design of the model and its component parts are shown in Figure IV-1. Inlet and outlet piping configurations of the prototype are simulated as closely as possible using the same length of pipe and the same number of elbows between the shutoff valves and the model inlet plenum. A deflector(1) plate prevents the incoming jet from impinging into the holes in the inlet distribution plate(3). The height of the inlet distribution annulus(2) decreases in the direction of flow such that the flow velocity is approximately constant and thus the pressure head across the perforated annular distribution plate(3) is uniform along its length. The inlet plenum(4) and outlet plenum,(5) as well as the outlet distribution header(6) are tapered in order to maintain a constant velocity and a constant static head. The fluid passes from the inlet header(2) through the perforated distribution plate(3) then through the inlet plenum(4) into the down flow tubes,(7) up the poison tube annuli,(8) radially outward through the outlet plenum,(5) and finally through the perforated outlet distribution(9) cylinder into the outlet header(6) and the outlet pipe.(10)

The manifold is fabricated using three plates. Additional spacers can be inserted to modify the plenum width if test results indicate modifications are required. Most pressure seals are made by replacable neoprene O-rings. The "poison" tubes have a plug(11) at the lower end which carries either a pitot tube(12) or a conductivity probe.(13) The stainless steel inner flow tubes(7) are held concentric with the outer tubes(14) and the pitot tubes by two levels of three set screws (15) There are static pressure taps at forty eight locations in the manifold wall, as shown in Figure IV-2 which permit flow distribution patterns to be correlated with pressure gradients in the plenums.

( ) Numbers refer to balloons on Figure IV-1.

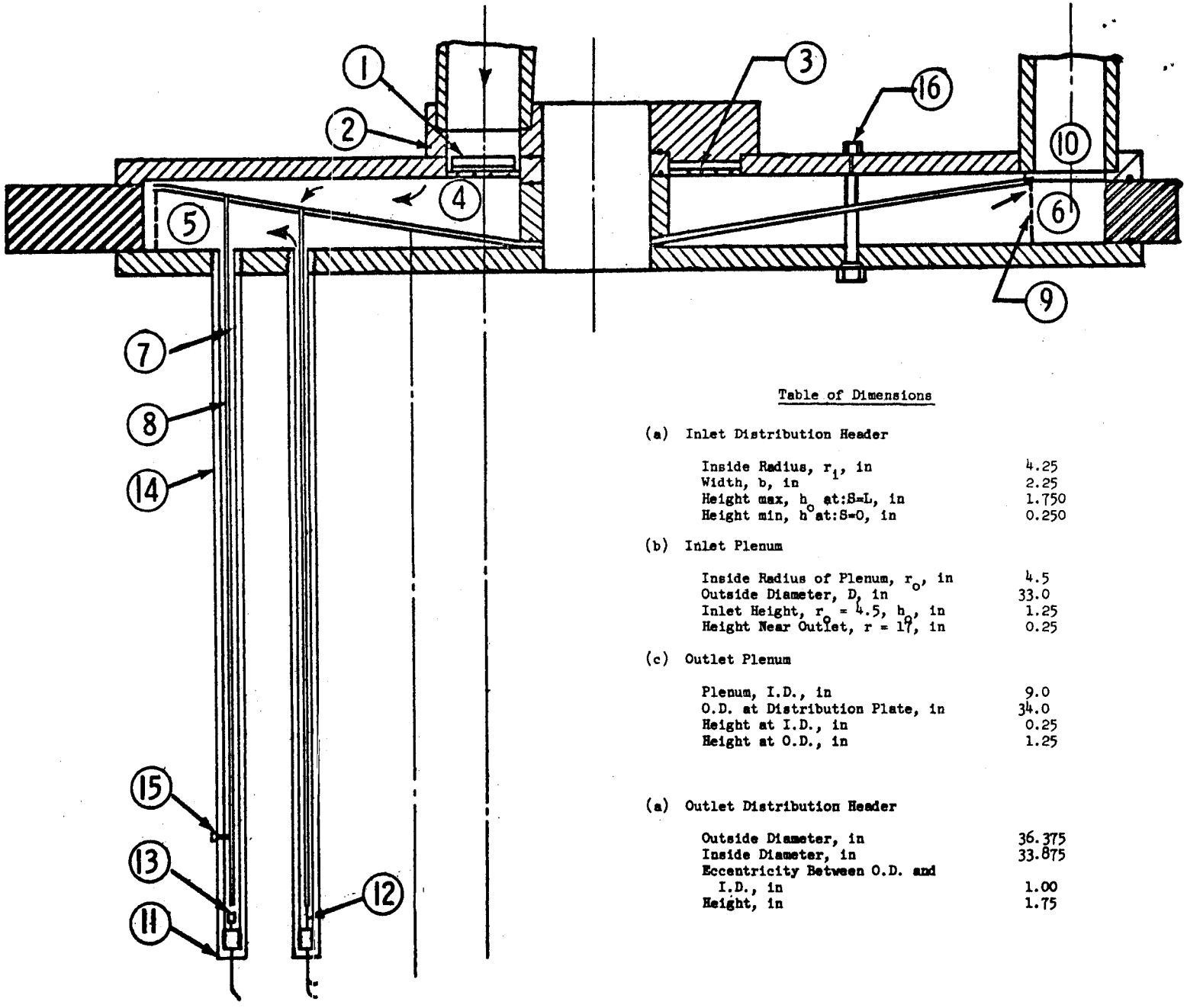

Table of Dimensions

(a) Inlet Distribution Header	
Inside Radius, r_1, in	4.25
Width, b, in	2.25
Height max, h_o at:S=L, in	1.750
Height min, h at:S=0, in	0.250
(b) Inlet Plenum	
Inside Radius of Plenum, r_o, in	4.5
Outside Diameter, D, in	33.0
Inlet Height, r_o = 4.5, h_o, in	1.25
Height Near Outlet, r = 17, in	0.25
(c) Outlet Plenum	
Plenum, I.D., in	9.0
O.D. at Distribution Plate, in	34.0
Height at I.D., in	0.25
Height at O.D., in	1.25
(a) Outlet Distribution Header	
Outside Diameter, in	36.375
Inside Diameter, in	33.875
Eccentricity Between O.D. and I.D., in	1.00
Height, in	1.75

MANIFOLD MODEL ASSEMBLY

Figure IV-1

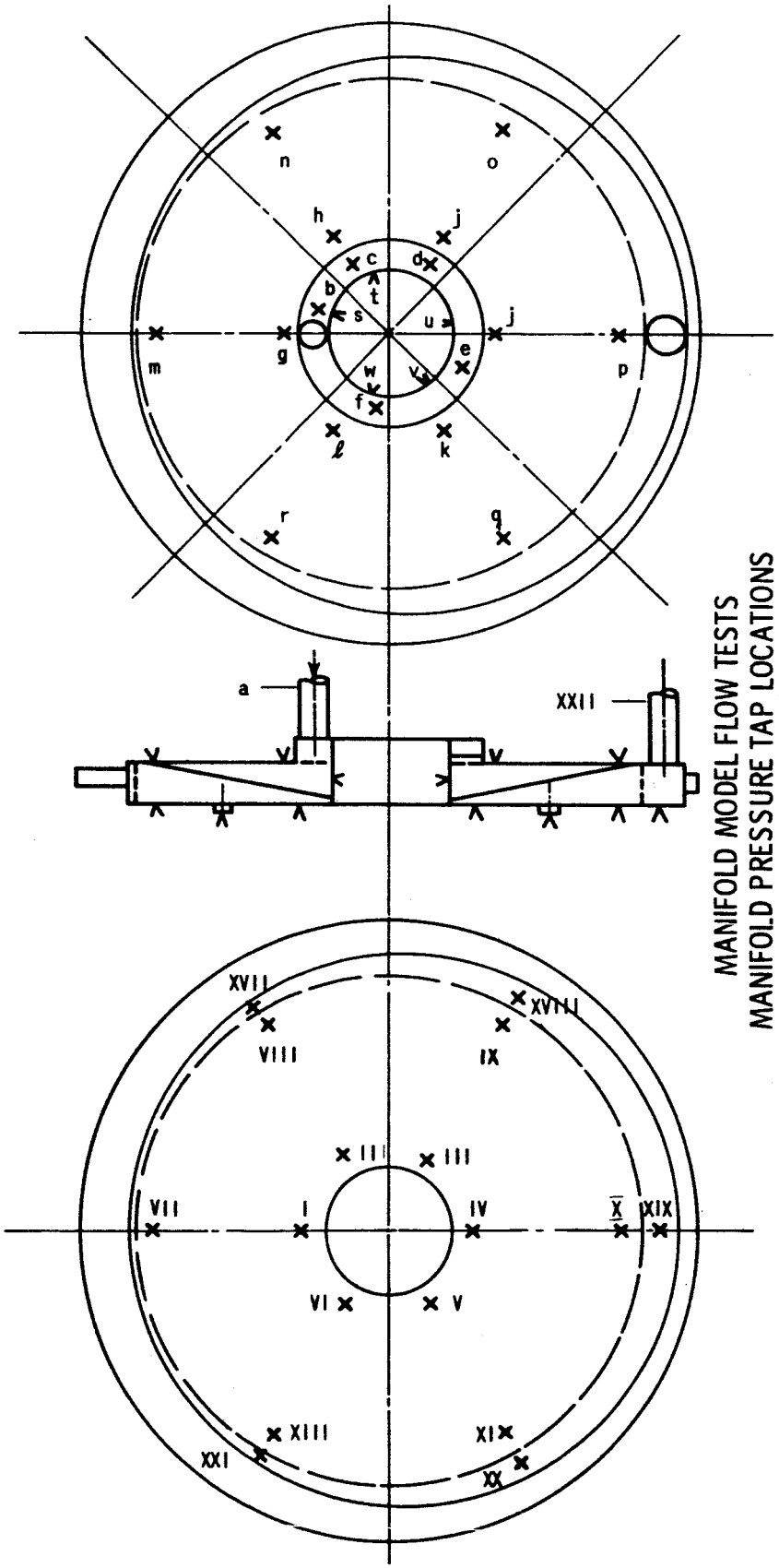
MANIFOLD MODEL FLOW TESTS
MANIFOLD PRESSURE TAP LOCATIONS
a
XXII
n
o
h
j
c
d
b
t
s
u
j
g
m
p
e
w
v
f
ℓ
k
r
q
XVII
XVIII
VIII
IX
III
III
VII
I
IV
X
XIX
VI
V
XIII
XI
XXI
XX

Figure IV-2

The deflection of the plenum plates is minimized by 38 tie bolts(16) located such that they limit the maximum beam span. Six of these tie bolts are drilled out for additional pressure taps. There are 98 pitot tubes and 98 conductivity probes. The plugs carrying these instruments are interchangeable so that they can be installed using any desired pattern. The model can be taken apart and different distribution plates having different performation patterns can be inserted. Gas or dye can be injected through one of the pressure taps or through one of the centering screw holes. Figure IV-3 is a top view of the manifold model installed in the test loop. Figure IV-4 shows a bottom view of the tubes with pitot tubes and conductivity cells mounted at their lower ends. Figure IV-5 shows the plates before assembly.

The test loop shown in Figure IV-6 consisted of a 1000 gallon supply tank, two 600 gpm pumps arranged in series to obtain the maximum head, and six inch schedule 10 stainless piping including a straight measuring section containing an orifice. A bypass cooler removes the pump heat and an in-line filter keeps the water clean. A flow regulating and a back pressure valve are provided; there is also instrumentation to measure temperature, pressure, and flow. The concentrate injection system contained a chemical measuring pump, a rotameter and a solenoid valve. Injection rate was set by adjusting the pump stroke.

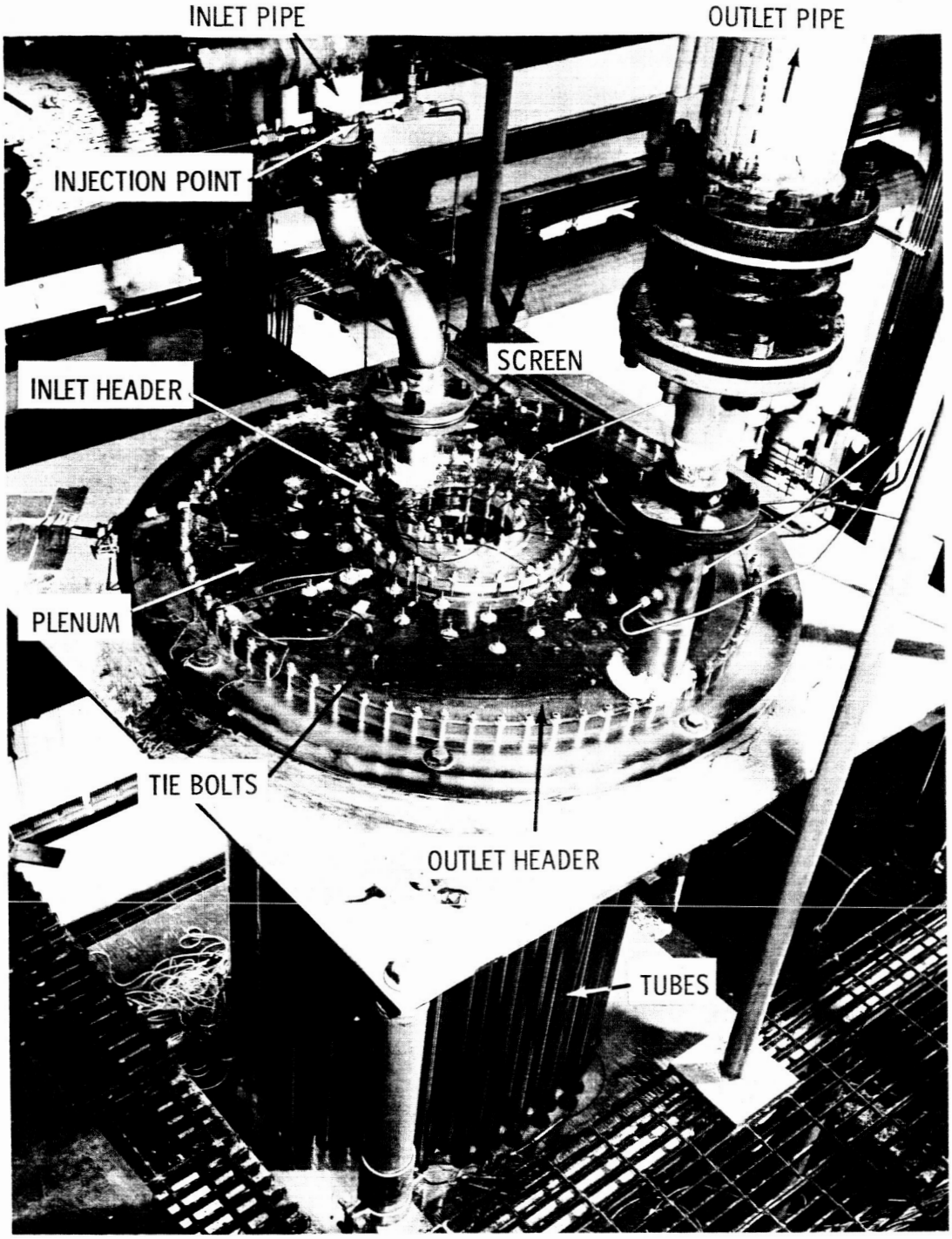

Figure IV-3 Top View, Manifold-Poison Tube Assembly - Plexiglas Flow Model

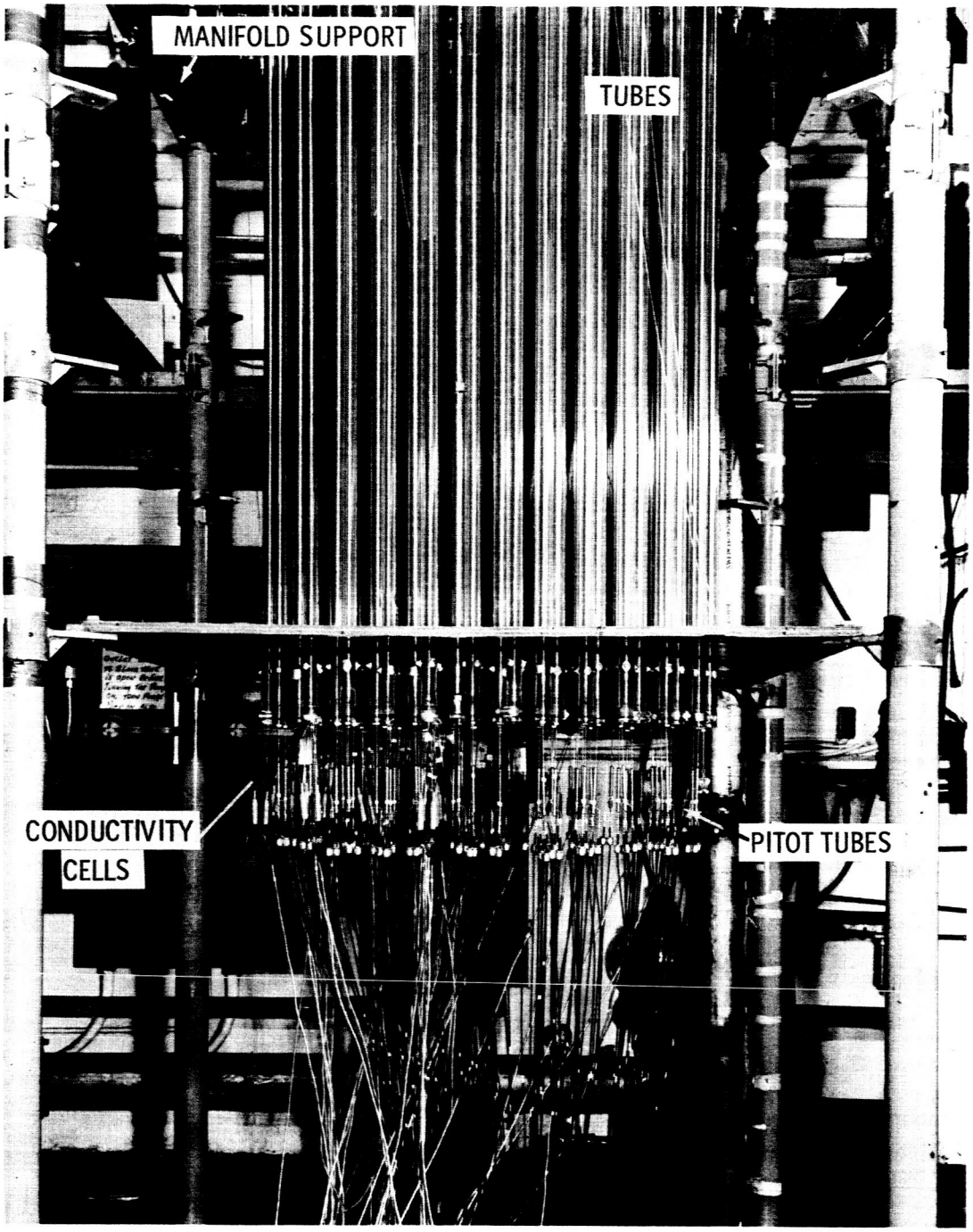

Figure IV-4 Bottom View, Manifold - Poison Tube Assembly - Plexiglas Flow Model

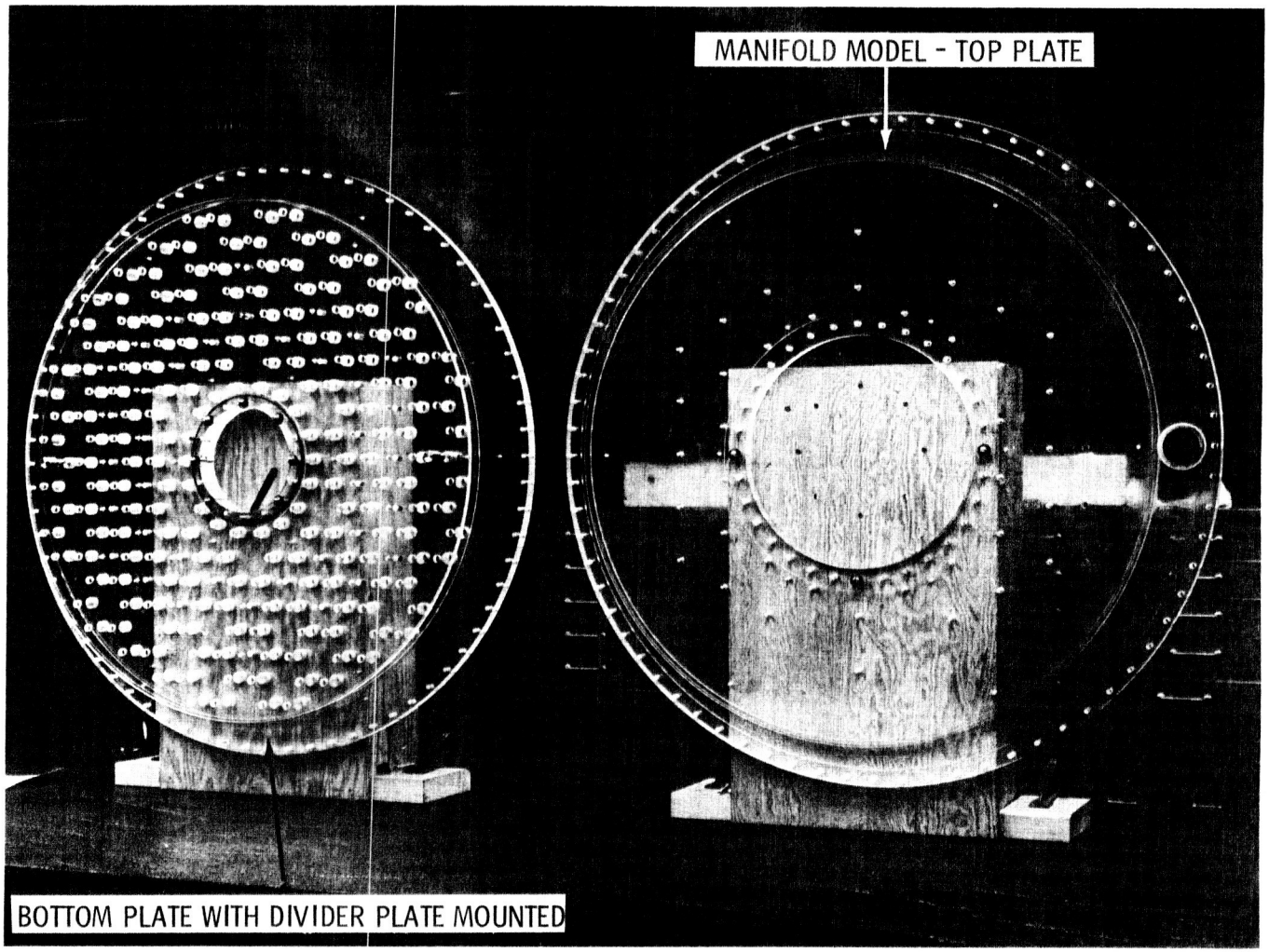

Figure IV-5 Manifold Plates Prior to Assembly

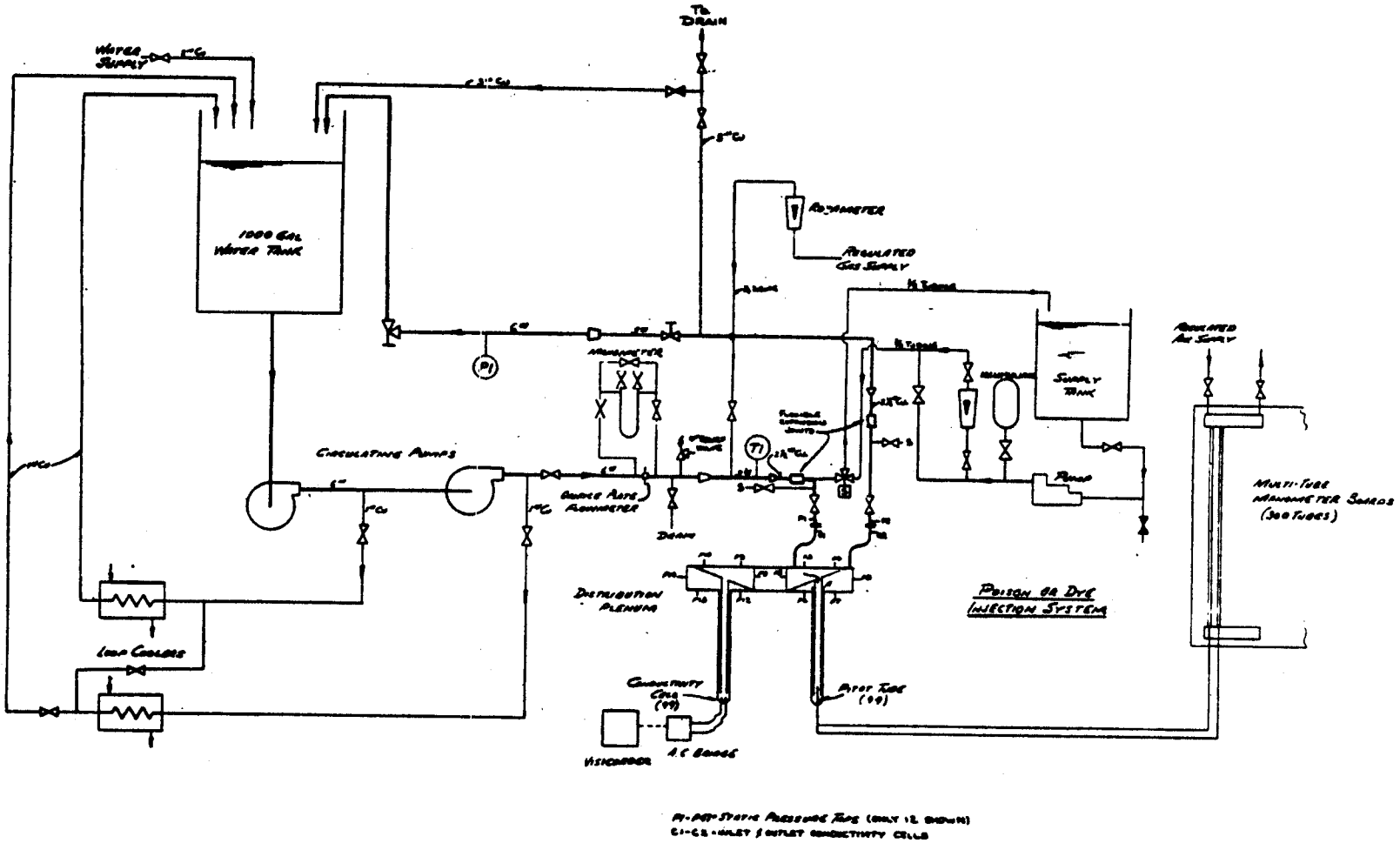

Figure IV-6

CPL3 Flow Model Testing Facility

B. Instrumentation and Calibration

1. Flow Distribution

The total circulating flow rate was measured by an orifice-manometer which was calibrated to 1% accuracy by comparison of flow rates through an orifice which had previously been calibrated at the Pennsylvania State University Hydraulics Laboratory. The flow distribution among the poison tubes was determined by pitot tubes installed into and concentrically with the inner tubes at the lower end, Figure IV-4 and Figure IV-7. These pitot tubes were calibrated in place in a typical poison tube assembly mounted in a separate low capacity (5 gpm) calibration loop.

The effects of depth of insertion and of eccentricity in installation of the pitot tubes into the low capacity loop were checked and found to be small. At a nominal flow of 3 gpm/tube, tubes with a pitot tube installed had 8% less flow than tubes without instrumentation and tubes with conductivity cells had 1% less flow than tubes without instrumentation. This flow rate variation did not introduce errors in the analysis since only flow rates in instrumented tubes were compared with one another in the normalizing process.

The pitot tubes were mounted in the bottom plugs for the poison tubes as shown in Figure IV-7. The pitot tube pressures were read off banks of water filled precision glass tubes Figure IV-8. These tubes were manifolded and pressurized in groups by regulated compressed air. This arrangement balanced the mean pitot tube pressure, so that the desired readings could be found accurately in inches of water above the balancing pressure. The balancing pressures were indicated by mercury manometers which showed the difference between a reference pressure and the manifolds. When steady flow conditions were reached the indicating tube banks were photographed to insure simultaneous readings. Figure IV-9 shows a typical record. These records were read and the results punched on IBM cards by using a Benson-Lehner scanner. A program was written for the IBM 7094 computer to process these cards and print out the normalized flow distribution in a hexagonal array corresponding to the tube array. The program is listed and the results are reproduced in Appendix A.

2. Concentration Distribution

The time for injected concentrated solution to reach the manifold was found by conductivity probes installed at the manifold inlet and outlet and at the bottom of the poison tubes. The probes, were connected to a A-C Bridge which had its output recorded on visicorders. When a concentration change occurred there was a

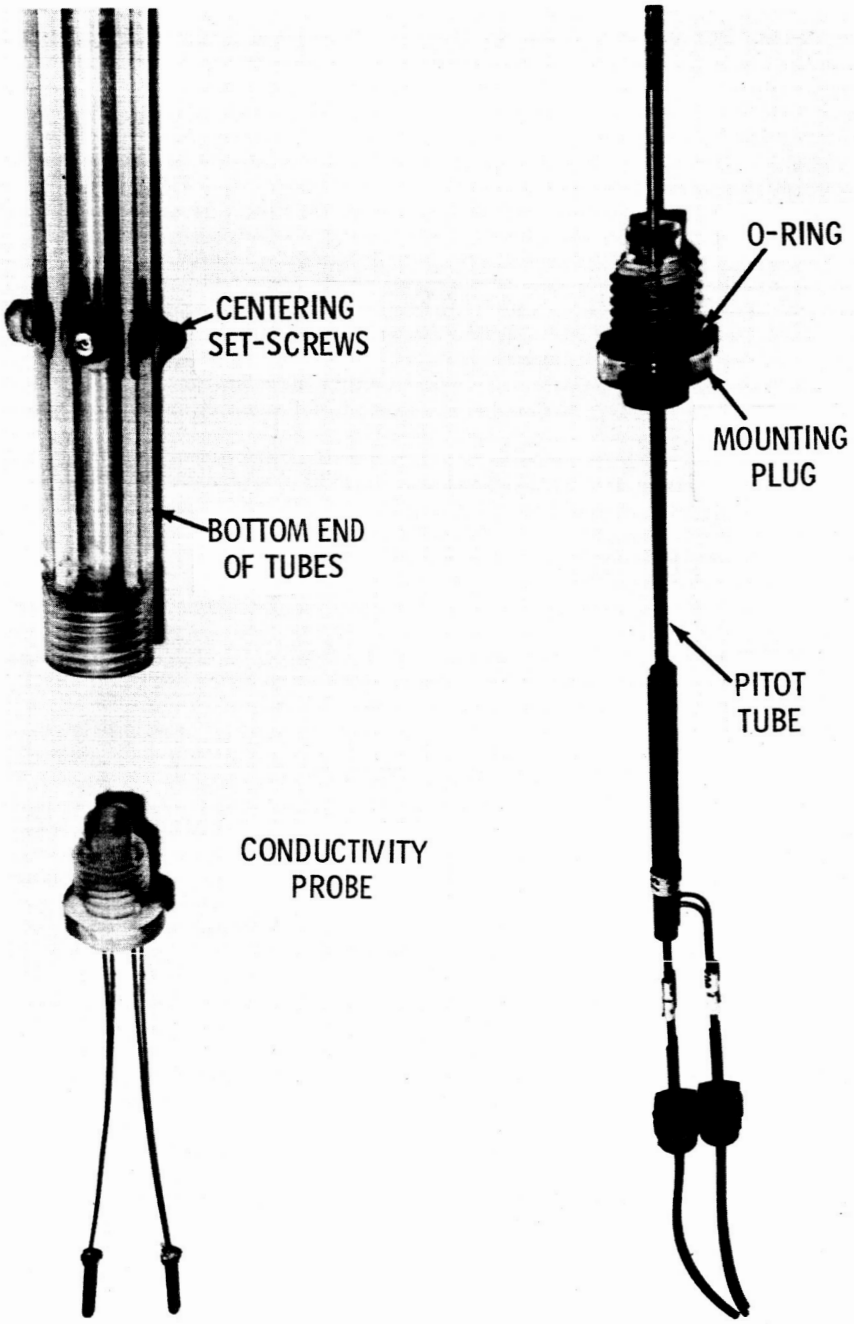

Figure IV-7 Assembly of Pitot Tubes and Conductivity Probes to Bottom End of Tubes

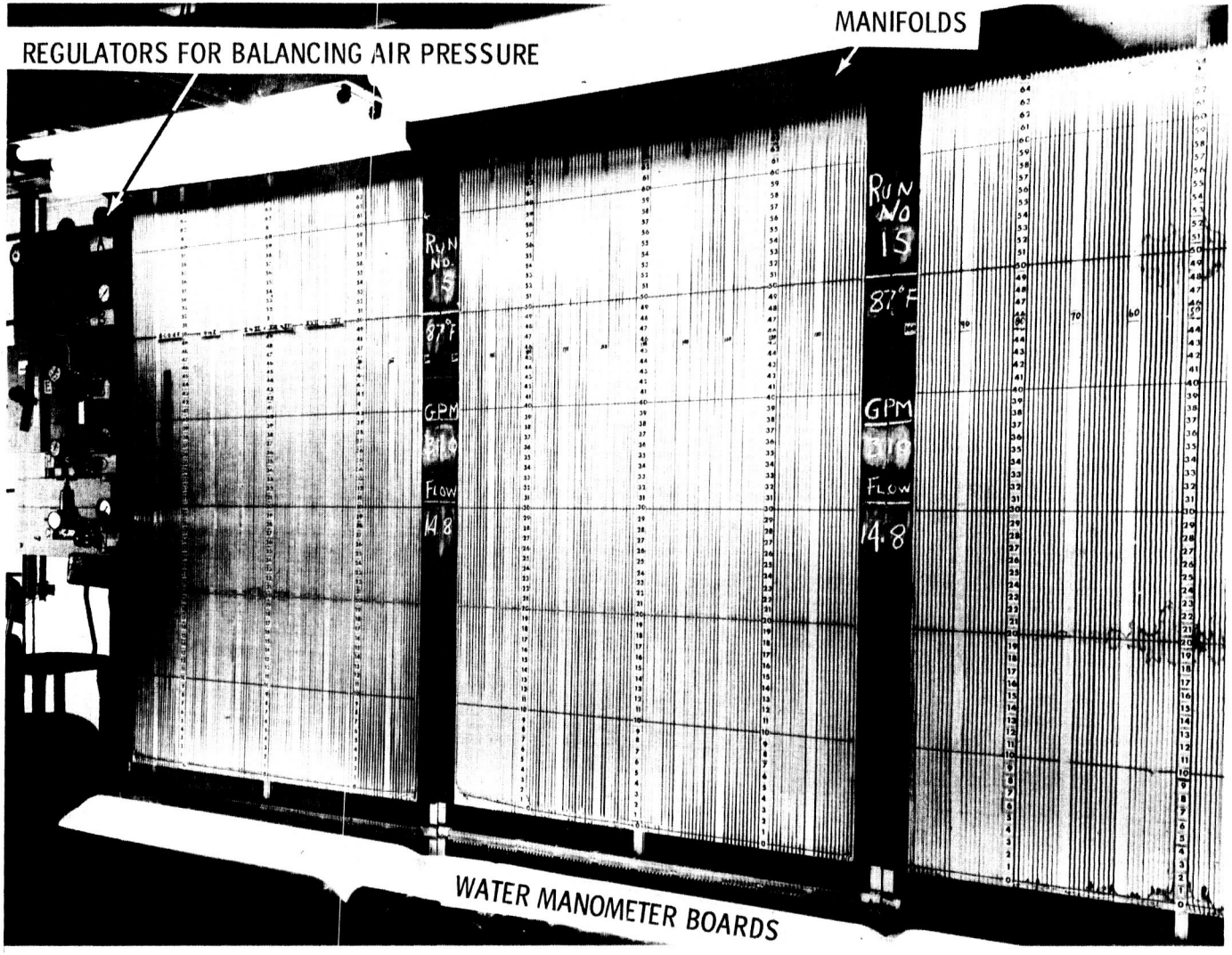

Figure IV-8 Manometer Board

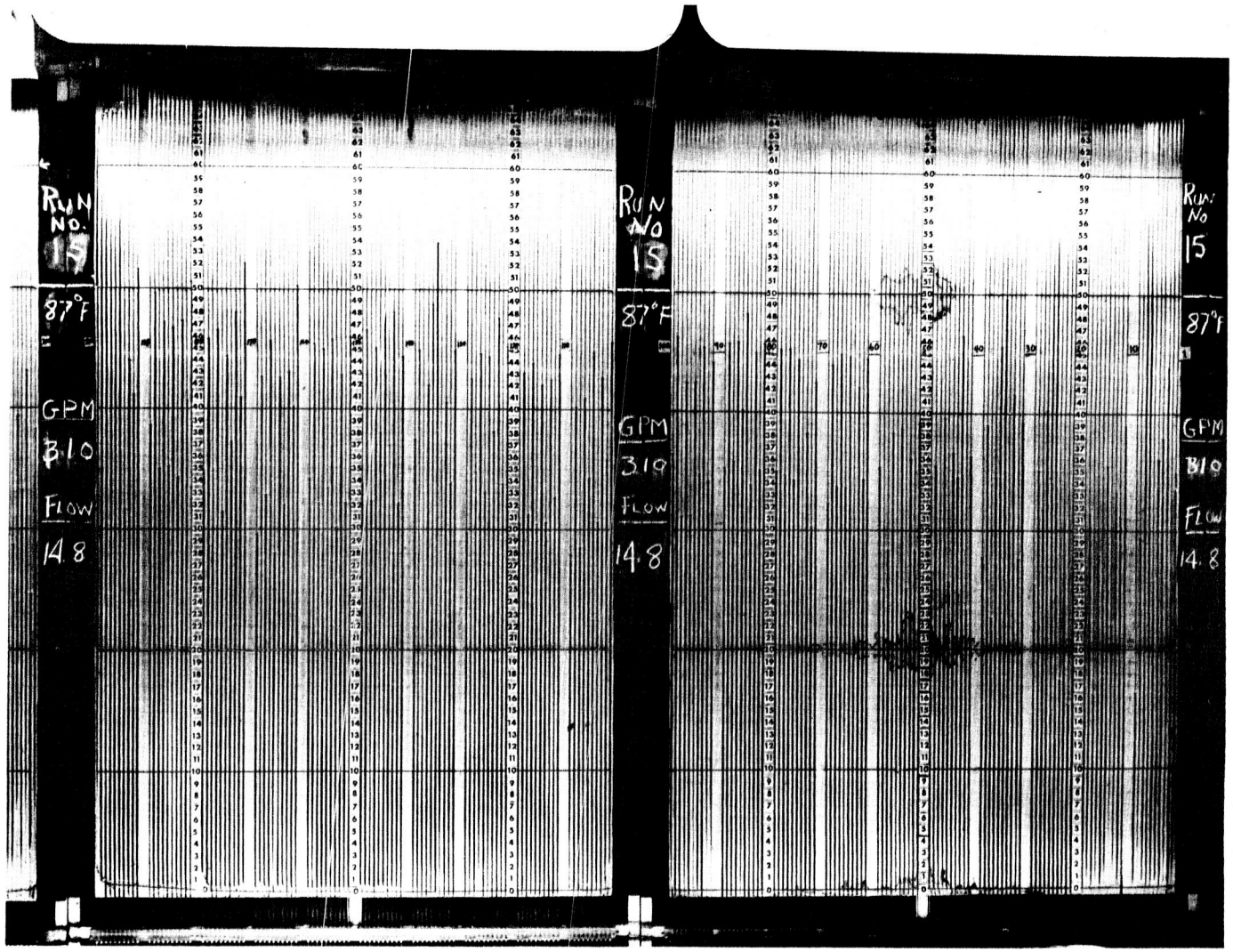

Figure IV-9 Typical Flow Record

deflection of the visicorder trace. The probes consisted of two one cm square platinum plated opposed plates as shown in Figure IV-7. They were calibrated individually and also by recording step changes in the concentration circulating solution and comparing them with chemical analyses of samples taken simultaneously. In the tests NaCl was substituted for $CdSO_4$ on an equal concentration basis. Figure IV-10 is a calibration record of 14 probes which correlates deflection and concentration. Figure IV-11 shows the three visicorders and the balancing bridge cabinet. The calibrated operating range was from 3 to 4 mg/cc solution. The injection tank charge was around 180 mg/cc. Figure IV-12 is a typical visicorder trace of a test recording time and concentration changes at the inlet, outlet and 16 tubes. There is a short delay after the valve opens before the concentration change front reaches the inlet probe. At the inlet the concentration still follows the injection pump stroke, but mixing and diffusion even out the concentration front so that it appears as a nearly linear variation at the bottom of the tubes.

The minimum time for the injected poison to pass through the manifold is found from arrival at the probe in the outlet pipe.

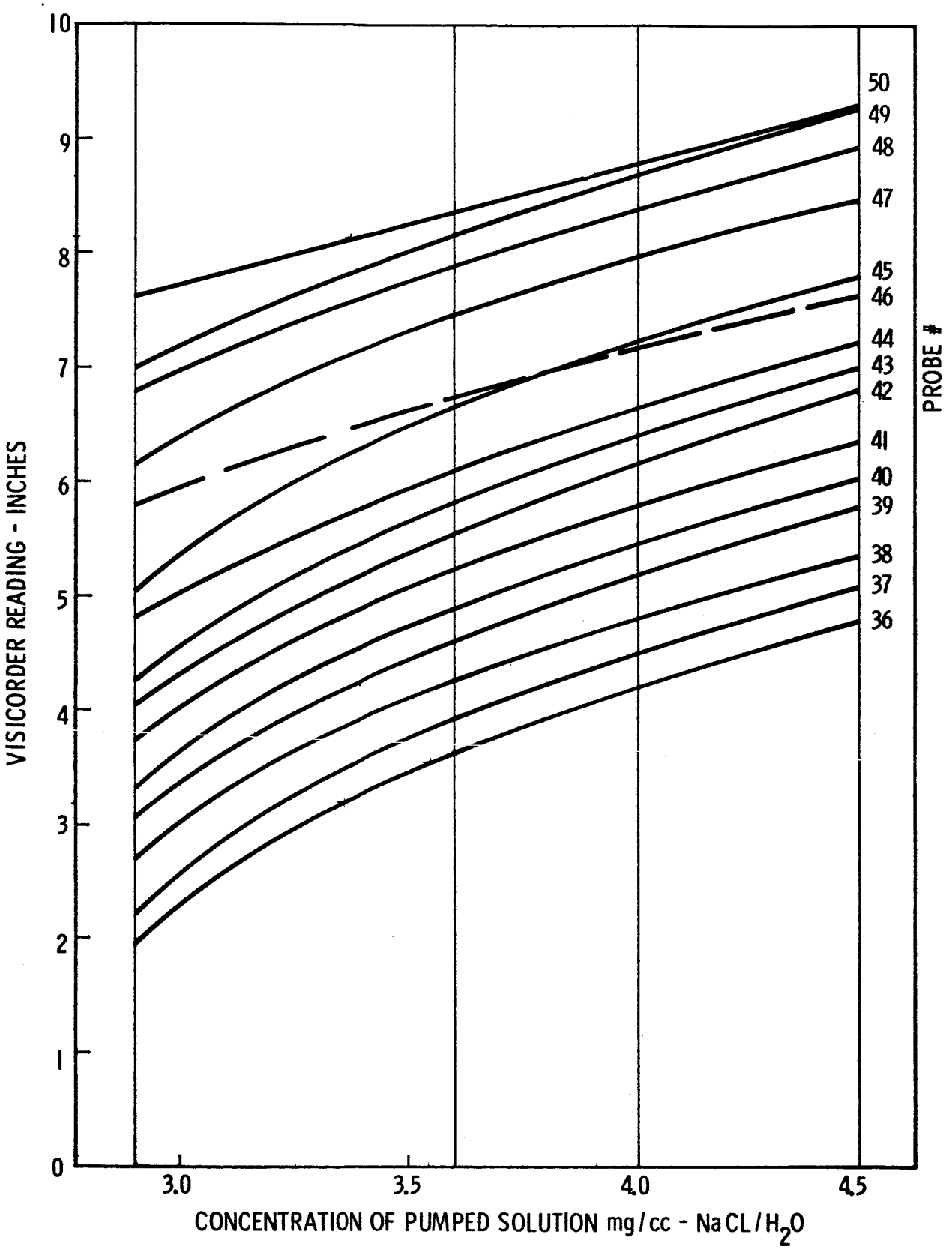

CONDUCTIVITY PROBE CALIBRATION

Figure IV-10

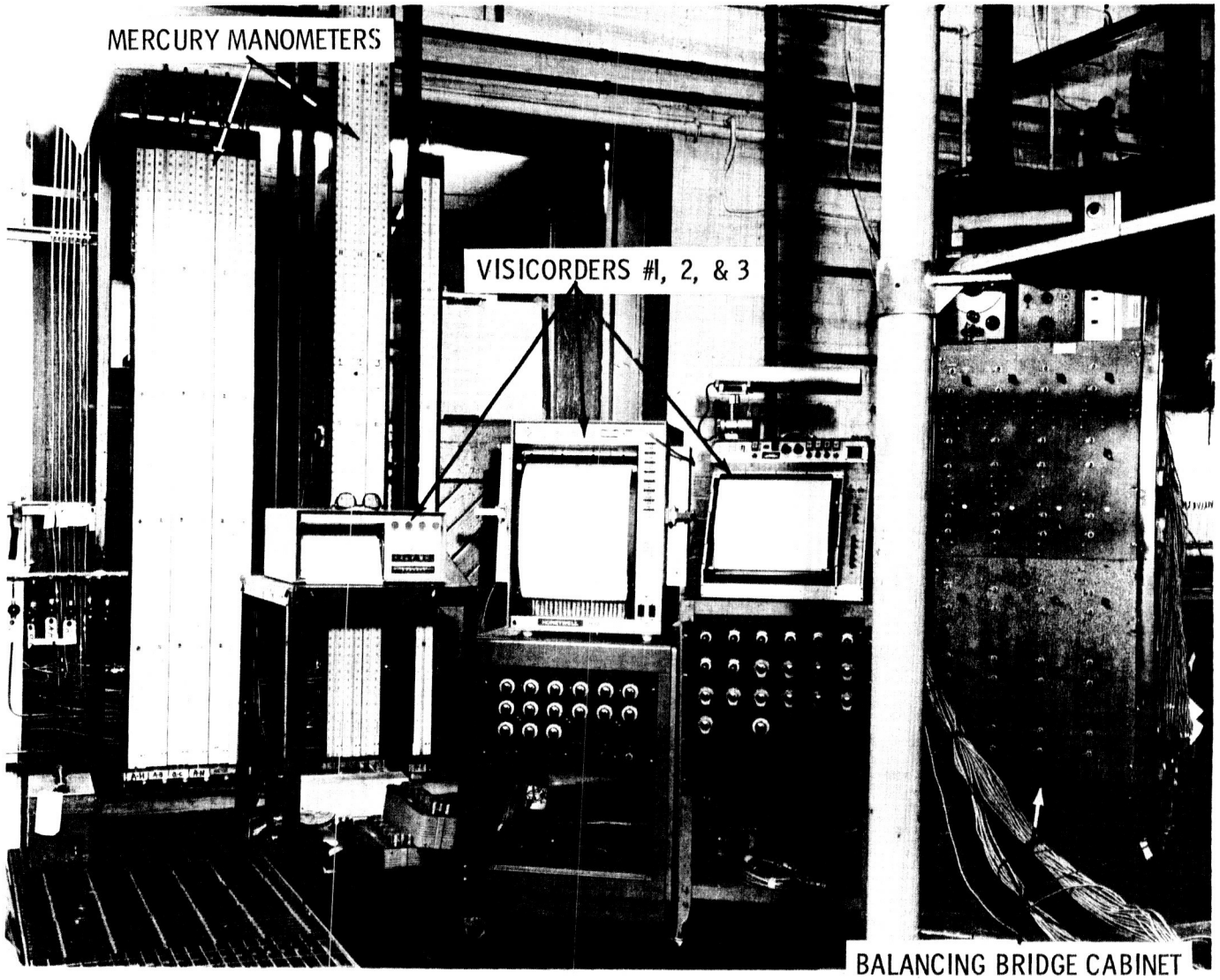

Figure IV-11 Visicorder Readout for Conductivity Probes

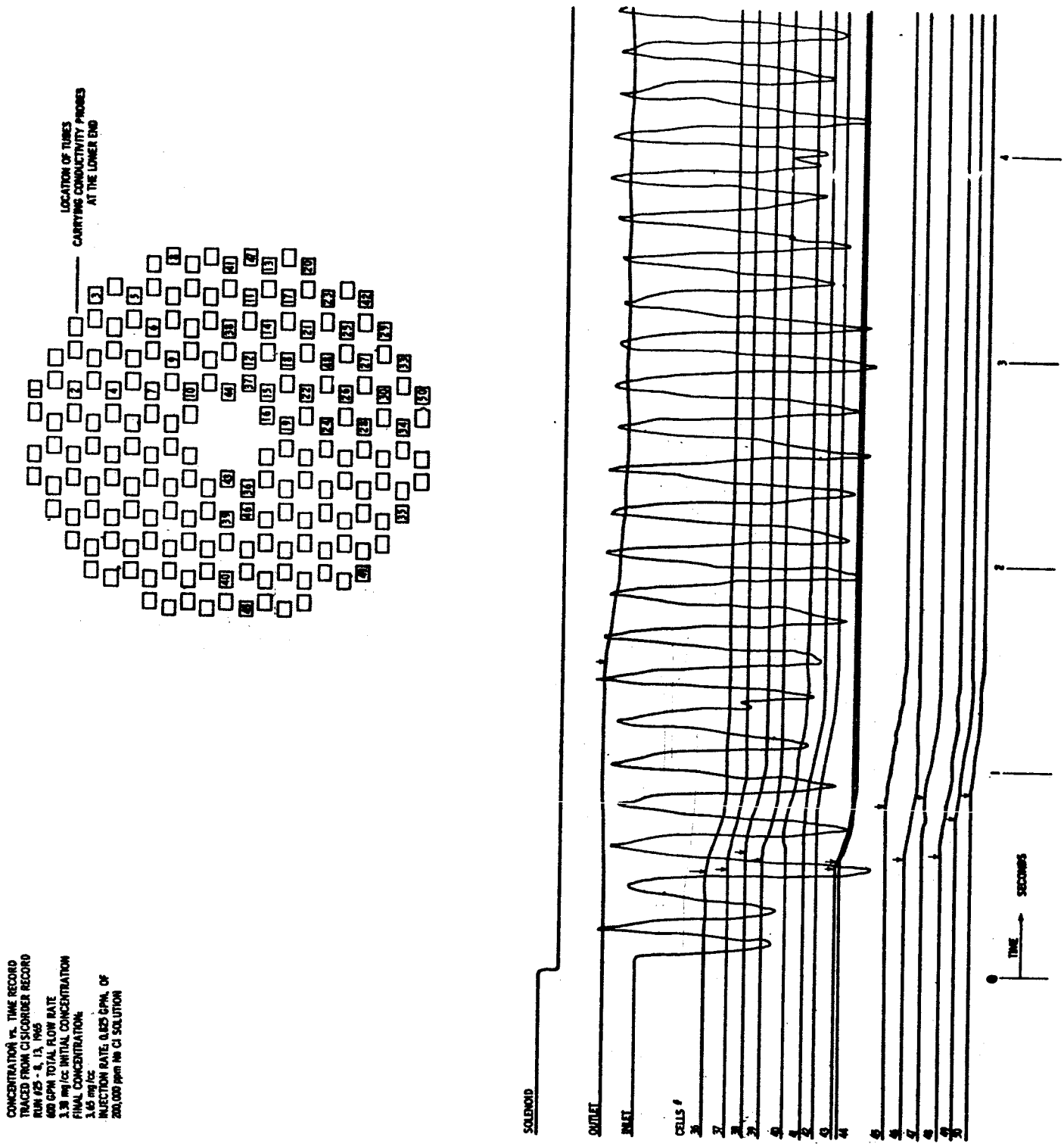

Figure IV-12

Typical Visicorder Trace

V. TEST RESULTS AND ANALYSIS

A. Flow Distribution Tests

The flow distribution tests were conducted to confirm the theoretical design of the manifold re-entrant tube assembly. Of particular interest were uniformity of flow distribution to the tubes and pressure drop. No major changes in design were found necessary and the final and preliminary designs are virtually identical and validate the theoretical design basis. Flow distributions among the tubes was uniform throughout the range of flow rates tested (100 to 600 gpm) and no singular flow region existed after the deflector plate was removed.

In the first flow test configuration 1A the tubes around the inner periphery of the manifold were partially starved.* The piping connections to the model consisted of short radius plastic elbows. These caused considerable cavitation particularly at high flow rates. Because of differential expansion a large number of re-entrant tubes at the outer periphery of the manifold failed at the roots of the threads connecting them to the manifold. For these reasons modifications were made as follows:

1. Mechanical Design Modifications

The upper threaded portions of the plastic tubes were replaced by brass nipples glued to the tubes. The tie bolts were replaced by bolts of higher strength material to prevent recurrence of failure. Threaded portions of the lower end of the plastic tubes showed radial cracks due to expansion of the plug inserts (by water absorption). They were glued, re-inforced or replaced as necessary.

2. Piping Connections Modifications

To eliminate cavitation and to reduce overall pressure drop of the test system, the outlet elbows were replaced by a straight pipe section. The sharp turn plastic inlet elbows had been selected to minimize transmission of vibration to the model. These elbows were replaced by long radius schedule 10 stainless steel elbows to suppress cavitation.** A screen was inserted downstream of the elbows to flatten the flow profile in the nipple.

3. Manifold Component Modifications

The flow rate through the re-entrant tubes at the inner periphery of the manifold was much lower than average. This condition was corrected by:

a. removal of the inlet deflection baffle which increased the flow through the tubes below the inlet nipple. This change and the changes made in (2) above are reported as configuration 1B.

---

*The flow distribution test data are reproduced in Appendix A.

**A discussion on the cavitation appears in Appendix B.

b. increasing the height of the inlet distribution header by 3/16 inch. This increased the flow to the average value in the tubes 180° from the inlet header. The entrance pressure drop coefficient for the holes in the distribution plate had been estimated too high as a result of treating the holes as tube entrances rather than thin plate orifices. A high coefficient increases the ratio of lateral outflow to flow through the header. When the header resistance was reduced by increasing its cross section a better flow ratio was achieved. This change is reported as configuration 1C.

In Table V-1, the test results are summarized. Using the normalized data and histograms in Appendix A, an average percentage deviation from average flow has been calculated and is listed. Also for the percentage of tubes whose flow deviated by certain increments from this average are also tabulated.

It can be seen that the minor modifications effected in the original design were successful in producing nearly average flow through all the tubes. The average deviation was improved through the modification and the number of tubes with considerable deviation from the average also decreased. For the design flow, the maximum deviation from the average is about 20% with 69% of the tubes varying less than ± 5% from the average. There is the likelihood that one of the tubes for which no measurement was made as much as 30% below the average. Another point to be noted is that although the average deviation is seen to increase as the flow rate decreases, the relative flow distribution remains essentially unchanged even at the lowest flow tested.

A detailed examination of the flow data indicated that the flow rate through several tubes was considerably lower or higher than average. There was, however, no discernible pattern as to the location of these tubes. It was suspected that these irregularities were caused by some peculiarity of tube installation rather than because of geometric location in the tube array. To confirm this conclusion and to rule out instrumentation abnormality, the pitot tubes from the eight "maverick" poison tubes were moved to the minor image locations for those poison tubes. In the new location, seven out of the eight showed flow very close to average. Thus, the flow maldistribution was ascribed to dissymetry or entrance effects in the poison tube installation. Later, after this program was complete, the plexiglas model top plate was removed and the poison tube inlets were examined. No correlation between the flow pattern and tube inlet configuration (such as re-entrant or recessed entry) could be found.

Table V-1

TEST RESULTS
FLOW DISTRIBUTION

Configuration*	Run No.	Flow Rate gpm	Average % Deviation	Percentage of Tubes Whose Flow Deviates from Average by: <.05	<.10	<.15	<.20	<.25	<.30	<.40	<.50	Figure No. in Appendix A
1A	1	313	.07	46	72	83	89	94	95	96	96	
1A	5	296	07	45	74	83	88	93	95	96	97	
1B	7	307	07	51	75	89	93	97	98	99	99	
1B	8	455		50	75	88	94	97	98	99	99	
1C	10	305	.06	54	85	90	94	98	99	99	100	3,4
1C	12	602	.05	69	85	94	100	100	100	100	100	5,6
1C	13	100	.06	60	84	89	94	96	98	99	100	7,8
1C	15	310	.06	60	87	94	97	98	98	99	100	9,10

* Configuration 1A with inlet baffle
1A with inlet baffle
1B without inlet baffle
1B without inlet baffle
1C inlet header
1C heightened .180"
1C heightened .180"
1C heightened .180"

The static pressures in the manifold were measured at the outer surfaces and may be slightly different at the tube inlets. There is a small circumferential variation and a smaller radial pressure difference in both inlet and outlet plenum, Figure V-1. Thus the attempt to secure uniform static pressure was compromised slightly by the use of straight-line plenum contours instead of the more complicated curved ones calculated. The total variation in static pressure in the inlet plenum is less than 0.5 psi and 0.3 psi for the outlet plenum. The minimum pressure drop across any tube is 10.5 psi and occurred in tubes at 8.5 inch radius near the inlet. The maximum pressure drop across any tube is 11.2 psi and occurred at a 15.75 inch radius 180° from the inlet. This total spread of pressure drop of approximately 6% cannot account for the low flows observed in isolated tubes.

The pressure profile through the manifold assembly was determined from the static pressure measurements at 600 gpm:

Location	ΔP Measured in the Model
Inlet Pipe (below valve) to Inlet Header	25.6 psi
Inlet Header to Inlet Plenum	24.0 psi
Inlet Plenum to Outlet Plenum	10.8 psi
Outlet Plenum to Outlet Header	4.3 psi
Outlet Header to Outlet Pipe	33.0 psi
Total manifold pressure drop	97.7 psi

Because of the insertion of the screen in the inlet, the manifold pressure drop was higher than previously estimated by about 13 psi. It was concluded that the edges leading to the outlet pipe should be rounded off or flared to reduce the pressure drop, in the reference design.

The tests were performed at atmospheric temperature and pressure without heat input to the tubes. The non-uniformity in the heat absorption in the prototype will produce a variation in the poison solution density and viscosity. Based on the reference flux distribution these variations are estimated to be less than 1% and 10% respectively.

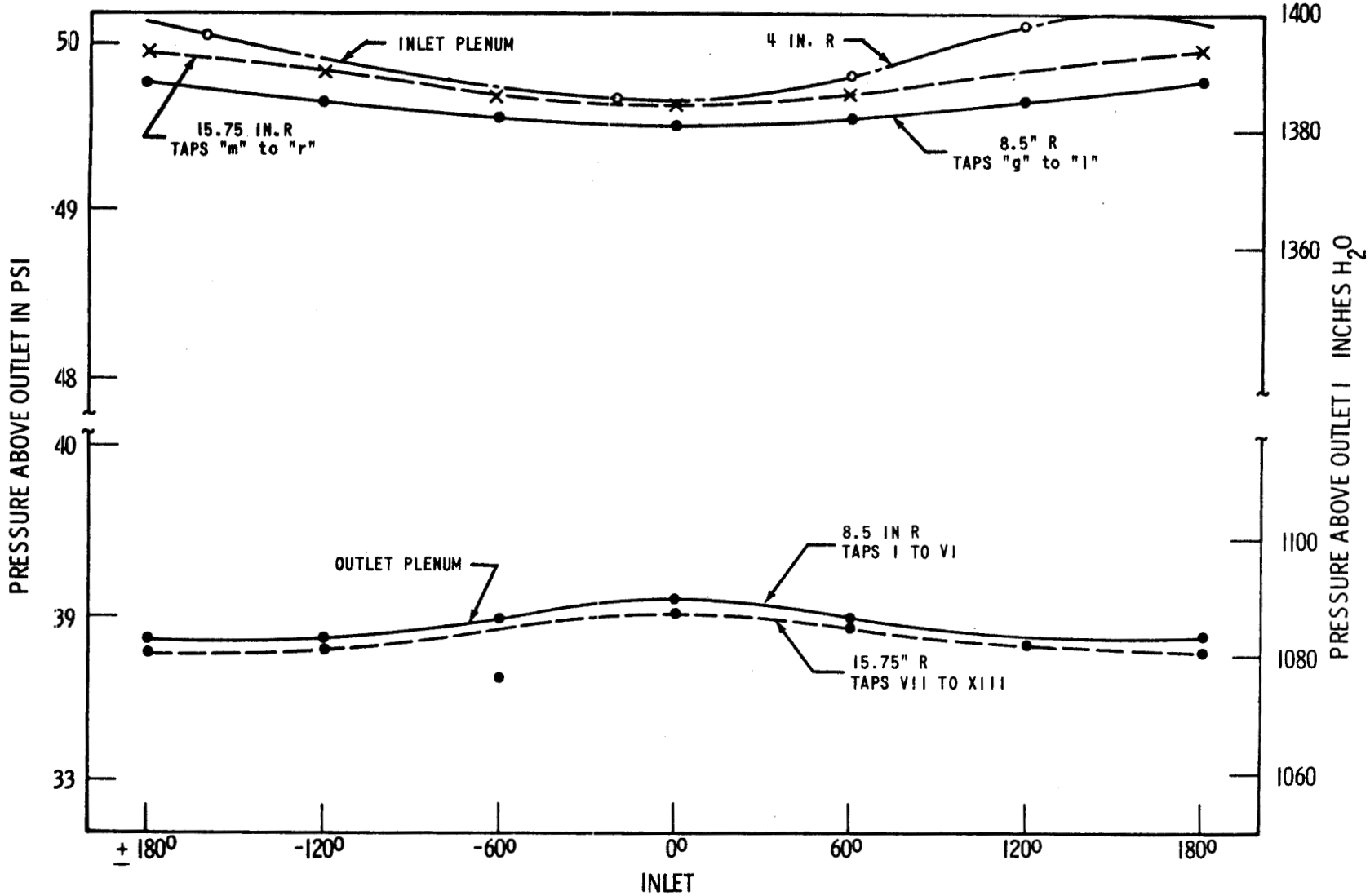

RUN #12 - 602 GPM STATIC PRESSURE DISTRIBUTION IN INLET & OUTLET PLENUM

Figure V-1

Although originally planned no tests were conducted with tubes which had dimensions significantly different than average. More important no tests were conducted with a gas phase dispersed in the liquid. The flow distribution and pressure drop would be significantly different if a considerable amount of radiolytic gas were present.

In general, the design basis of uniform flow distribution in the tubes during single phase flow was fulfilled within practical limits. Checks at locations symmetrical with the instrumented half of the core along the plane through inlet and outlet centerlines show that the same distribution could be expected in the non-instrumented half of the core. This conclusion was confirmed in the subsequent concentration distribution tests. The mean deviation is of a magnitude equal to or less than that obtained in numerous flow distribution tests of reactor models which have a much simpler geometry.

B. Concentration Distribution Tests

These tests were made to establish the time history and spacial distribution of the propagation of concentration change through the manifold. In particular, the design required that the concentration gradient in the assembly should not exceed $\pm$ 5%. Injection of the concentrate was to be sensed at the top of the re-entrant tubes within 0.2 seconds after opening of the injection valve. The first 16 runs were calibration runs with only ten conductivity probes connected to the recorder (array #0). When the injection system performed as designed, the 48 probes were distributed in two arrays (I and II) in succession, each covering more than one half of the core and having 16 locations in common for comparison.

The loop concentration during these tests was near 3.4 mg sodium chloride per cc solution. The concentrate injection rate was about 0.17 gpm except for runs 16 and 25 for which a higher rate was used to maximize visicorder response. It was found that the time period between injection and arrival of the concentrate at the tubes was independent of the injection rate within the limits tested. Table V-2 summarizes the conditions and results of the injection tests. The tests covered circulating flow rates from 175 to 600 gpm.

Test results obtained with the same flow rates and arrays 0, I or II were combined to give maps of time delay distribution from injection valve opening to arrival of the concentration change at the bottom of the tubes; Figure V-2 for 300 gpm, Figure V-3 for 400 gpm, and Figure V-4 for 175 gpm. The 600 gpm run was made with array II only and it's results are shown in Figure V-5. An examination of these maps indicates that the arrival time at any flow rate varies principally with radius and not very much with circumferential location.

Table V-2

TEST RESULTS
CONCENTRATION DISTRIBUTION

Run No.	Date 1965	Flow gpm	Probe Array No.	Loop Concentration mg/cc	Injection Rate gpm	Injection Conc. mg/cc	Avg. Deflection mg/cc	Avg. Deflection % of Loop Conc.	To Bottom of Tubes	To Top of Tubes	To Outlet
15	7-28	175	0	3.31	0.174	122	0.122	3.70	1.62	.21	4.61
16	7-28	300	0	3.31	0.425	182	0.07	2.12	0.93	.120	2.60
17	8-6	300	I	3.30	0.175	186	-	-	0.923	.113	2.80
18	8-6	200	I	3.30	0.175	186	-	-	1.31	.18	2.625
19	8-9	302	I	3.30	0.17	188	0.075	2.27	0.94	.184	2.625
20	8-9	395	I	3.29	0.17	188	0.050	1.52	0.66	.0652	2.375
21	8-11	300	II	3.58	0.17	160	0.070	1.96	0.94	.12	2.75
22	8-11	175	II	3.58	0.17	160	0.120	3.35	1.63	.22	4.6
23	8-11	407	II	3.58	0.17	160	0.050	1.40	0.71	.112	1.875
24	8-12	596	II	3.30	0.17	164	0.0225	0.68	0.5	-	1.6
25	8-13	600	II	3.38	0.825	200	0.2155	6.40	0.48	.075	1.44

CONFIGURATION NO. 1-C-I&II

TYPE OF TEST Salt Injection

RUN NO. 19-21

OPERATORS _____

DATE _____

TIME _____

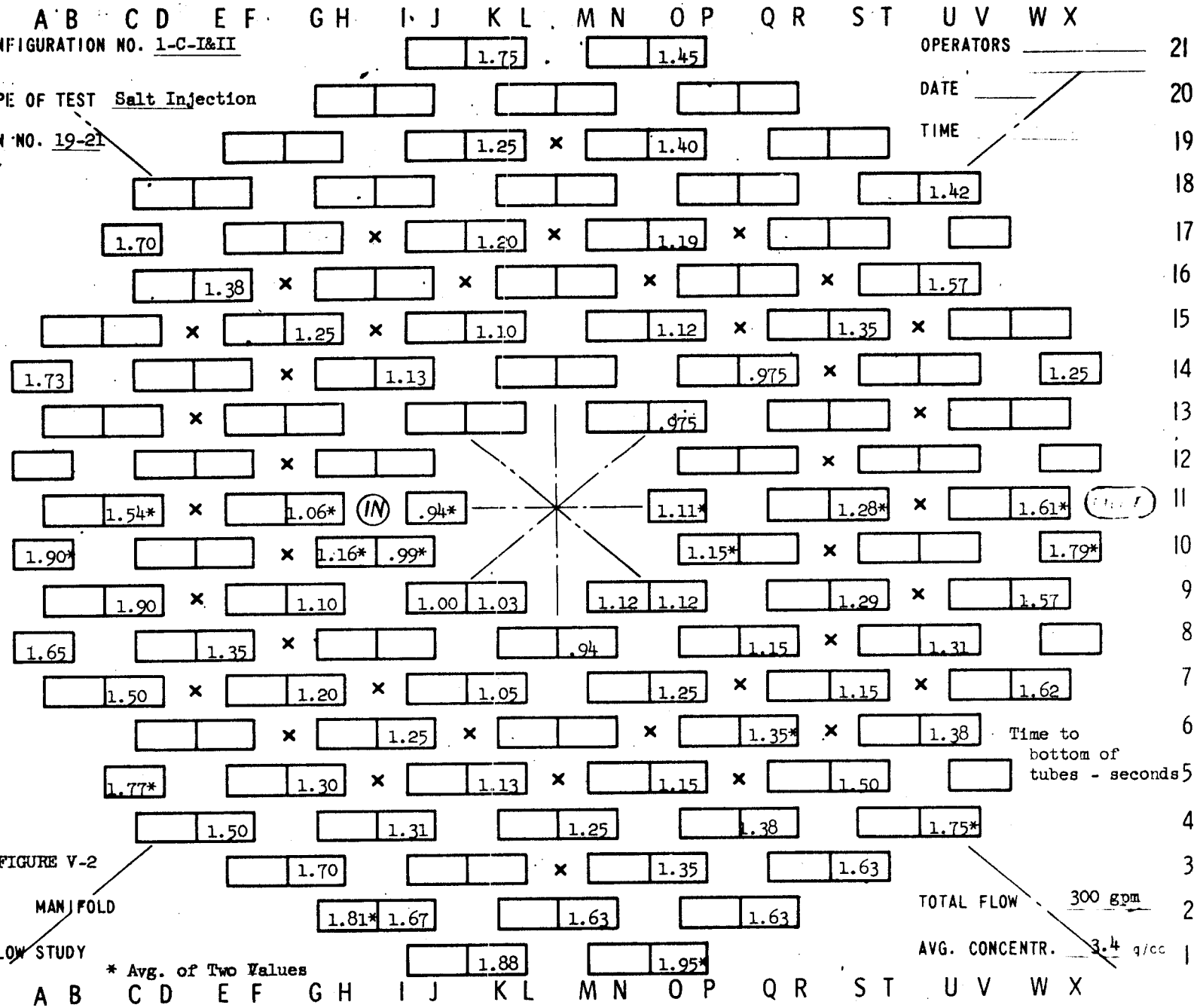

Time to bottom of tubes - seconds

TOTAL FLOW 300 gpm

AVG. CONCENTR. 3.4 g/cc

FIGURE V-2

MANIFOLD

FLOW STUDY

* Avg. of Two Values

X = TIE BOLT LOCATION

CONFIGURATION NO. 1-C-I&II

TYPE OF TEST Salt Injection

RUN NO. 20-23

OPERATORS _____

DATE _____

TIME _____

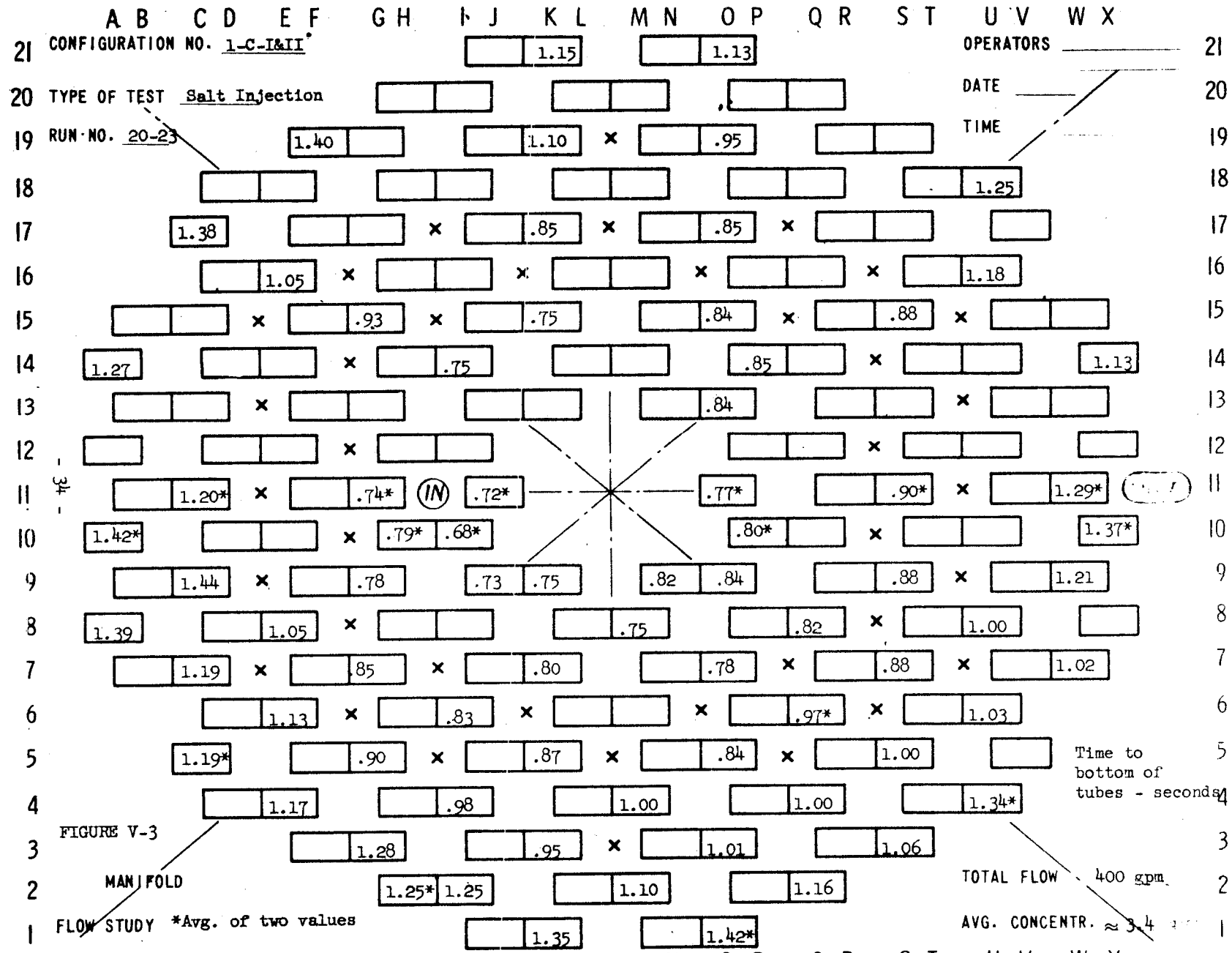

Time to bottom of tubes - seconds

FIGURE V-3

MANIFOLD

FLOW STUDY

*Avg. of two values

TOTAL FLOW 400 gpm

AVG. CONCENTR. ≈ 3.4

X = TIE BOLT LOCATION

CONFIGURATION NO. 1-C-O&II

TYPE OF TEST Salt Injection

RUN NO. 15-22

OPERATORS _____

DATE _____

TIME _____

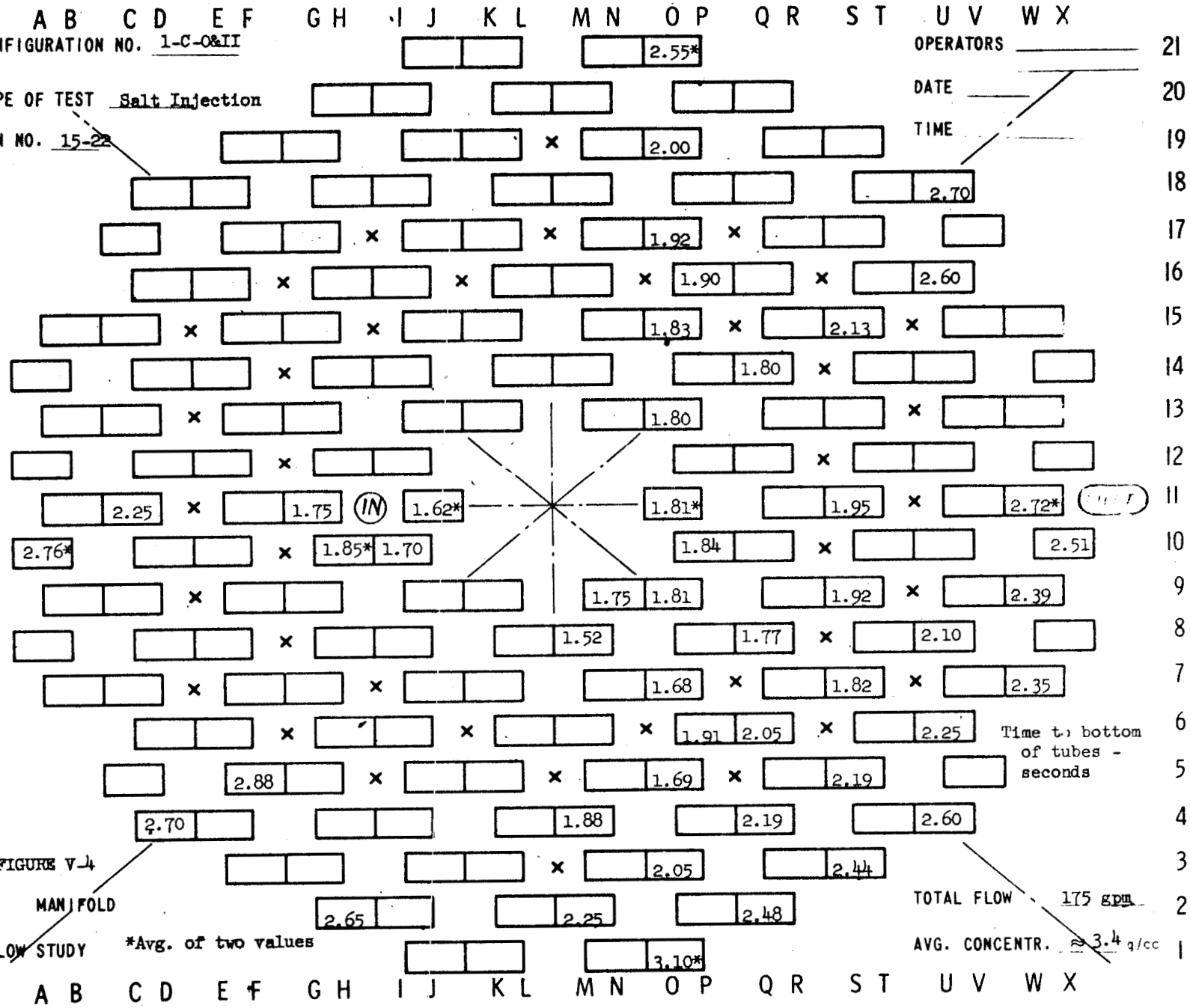

Time to bottom of tubes - seconds

FIGURE V-4

MANIFOLD

FLOW STUDY

*Avg. of two values

TOTAL FLOW 175 gpm

AVG. CONCENTR. ≈ 3.4 g/cc

X = TIE BOLT LOCATION

CONFIGURATION NO. 1-C-II

TYPE OF TEST Salt Injection

RUN NO. 25

OPERATORS _____

DATE _____

TIME _____

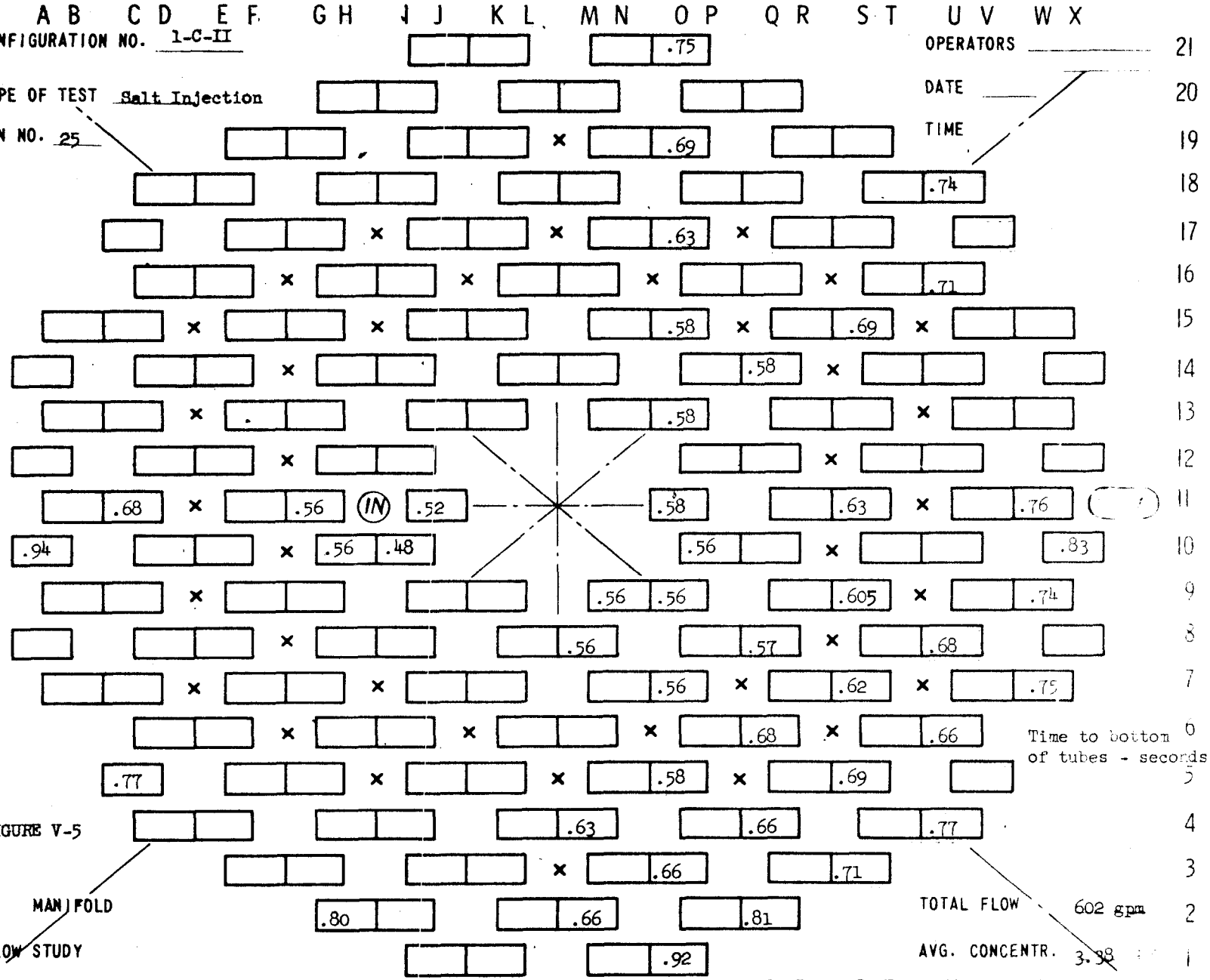

Time to bottom of tubes - seconds

FIGURE V-5

MANIFOLD FLOW STUDY

TOTAL FLOW 602 gpm

AVG. CONCENTR. 3.38

x = TIE BOLT LOCATION

A comparison of results for the same tubes from two runs at the same flow rate will indicate reproducibility of results. Table V-3 summarizes this comparative data for flow rates of 175, 300, and 400 gpm. Shown on this table are readings for all tubes instrumented during more than one test and the average values of the readings in any given tube and the average percentage deviation.

The reference system requirements for time of arrival of poison in the system were checked by direct measurement of concentration change history after injection of chemical solution. The check points are located at manifold inlet and outlet, and at the bottom of the tubes. The test results in the form of visicorder traces showed the start, duration and completion of the change (Figure IV-12). The local rate of change depends on the width of the mixing zone and its change with passage through the manifold. An experimental equation by F. Sjenitzer/4 is derived in Appendix C. It describes the width of such a mixing zone.

$$s = 1.96 \times 10^4 \left(\frac{L}{a}\right)^{0.07} \sqrt{aL} \times \gamma^{1.8} \operatorname{erf}^{-1} (2y-1)$$

This gives a mixing zone of about 1.3 ft length or of 0.122 seconds for the 4-1/2 ft long poison tubes and about 1 ft or 0.03 seconds for the approach piping.

The time interval required for flow to travel from the top to the bottom of the tubes at the average velocity and the time equivalent of the change in width of the mixing zone were subtracted from the measured arrival times at the bottom to give, for 600 gpm, the distribution of concentration change arrival times at the top of the tubes after opening of the injection Valve, Figure V-6. It is shown that at about 18% of the tube locations the concentrate will arrive within 0.2 seconds. Figure V-7 shows the arrival times at minimum and average locations for 600 gpm (Run #25).

The time schedule is, of course, a function of flow rate. The greater the flow rate, the shorter the times. Time schedules resulting from all the tests were prepared in the manner indicated above and the results are plotted in Figure V-8. The slope of these lines indicates that the time intervals are inversely proportional to flow rate.

The visicorder traces indicate that the change in concentration is linear with time. The duration of the change, i.e. the width of the mixing zone, increases with distance from the injection point, i.e. with time. This is illustrated in Figure V-9 where the times to start and complete the concentration changes at manifold inlet, manifold outlet, and bottom of tubes are plotted in proportion to their appearance in the test records. The slope of the top-of-tube times were calculated using the expression of Sjenitzer for the width of the mixing zone.

Table V-3

Comparison of Times for Arrival of Injected Salt Solution
At the Bottom of Tubes

Flow Rate	175 gpm				300 gpm				400 gpm			
Test Run No.	15	22			19	21			20	23		
Tube Location	Sec.	Sec.	Average Deviation Sec.	± %	Sec.	Sec.	Average Deviation Sec.	± %	Sec.	Sec.	Average Deviation Sec.	± %
O-21	2.75	2.43	2.59	6.2								
C-11					1.44	1.63	1.535	6.2	1.19	1.20	1.195	0.4
G-11					1.00	1.12	1.06	5.6	0.78	0.71	0.745	4.7
J-11	1.62	1.63	1.625	0.3	0.94	0.94	0.94	0.0	0.71	0.73	0.72	1.4
O-11	1.81	1.82	1.815	0.3	1.10	1.13	1.115	1.3	0.81	0.74	0.775	4.6
S-11					1.25	1.31	1.28	2.3	0.84	0.96	0.90	4.5
W-11	2.75	2.70	2.725	0.9	1.60	1.63	1.615	0.9	1.20	1.38	1.29	7.0
A-10	2.45	3.03	2.74	10.6	1.90	1.90	1.90	0.0	1.40	1.45	1.425	1.8
H-16	1.82	1.88	1.85	1.6	1.15	1.18	1.165	1.3	0.83	0.75	0.79	5.0
I-10					0.93	1.06	0.995	3.0	0.71	0.66	0.685	3.7
P-10					1.10	1.20	1.15	4.4	0.82	0.78	0.80	2.5
X-10					1.80	1.78	1.79	0.6	1.34	1.40	1.37	2.2
Q-6					1.37	1.33	1.35	1.5	0.95	1.00	0.975	2.6
C-5					1.77	1.78	1.775	0.3	1.13	1.25	1.19	5.0
U-4					1.75	1.75	1.75	0.0	1.35	1.33	1.34	0.7
H-2					1.85	1.78	1.815	1.9	1.16	1.34	1.25	7.2
O-1	3.12	3.08	3.10	0.7	1.95	1.95	1.95	0.0	1.38	1.46	1.42	2.8
Avg.				3.0				1.8				3.5

CONFIGURATION NO. 1-C-II

TYPE OF TEST Salt Injection

RUN NO. 25

OPERATORS _____

DATE _____

TIME _____

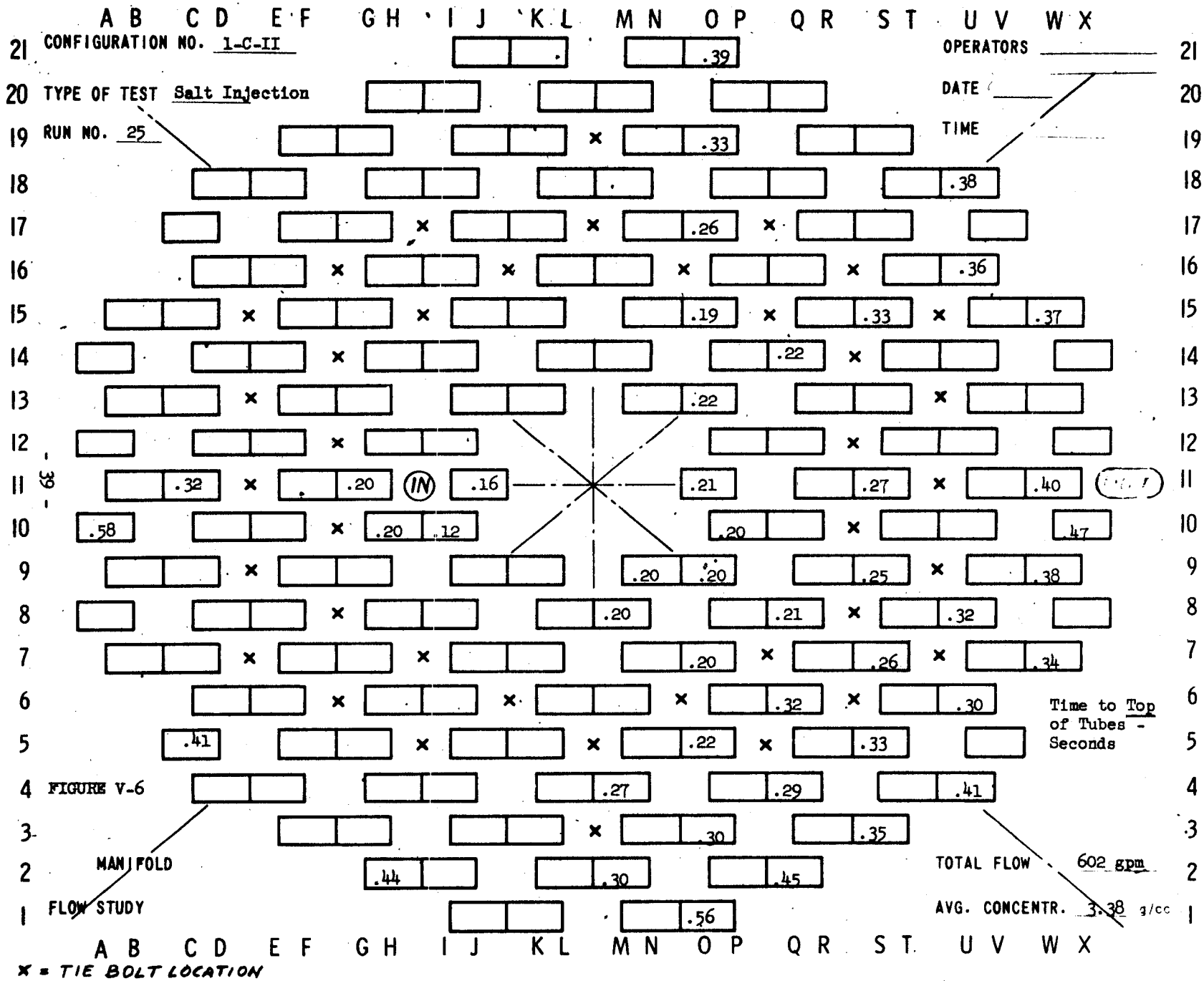

FIGURE V-6

X = TIE BOLT LOCATION

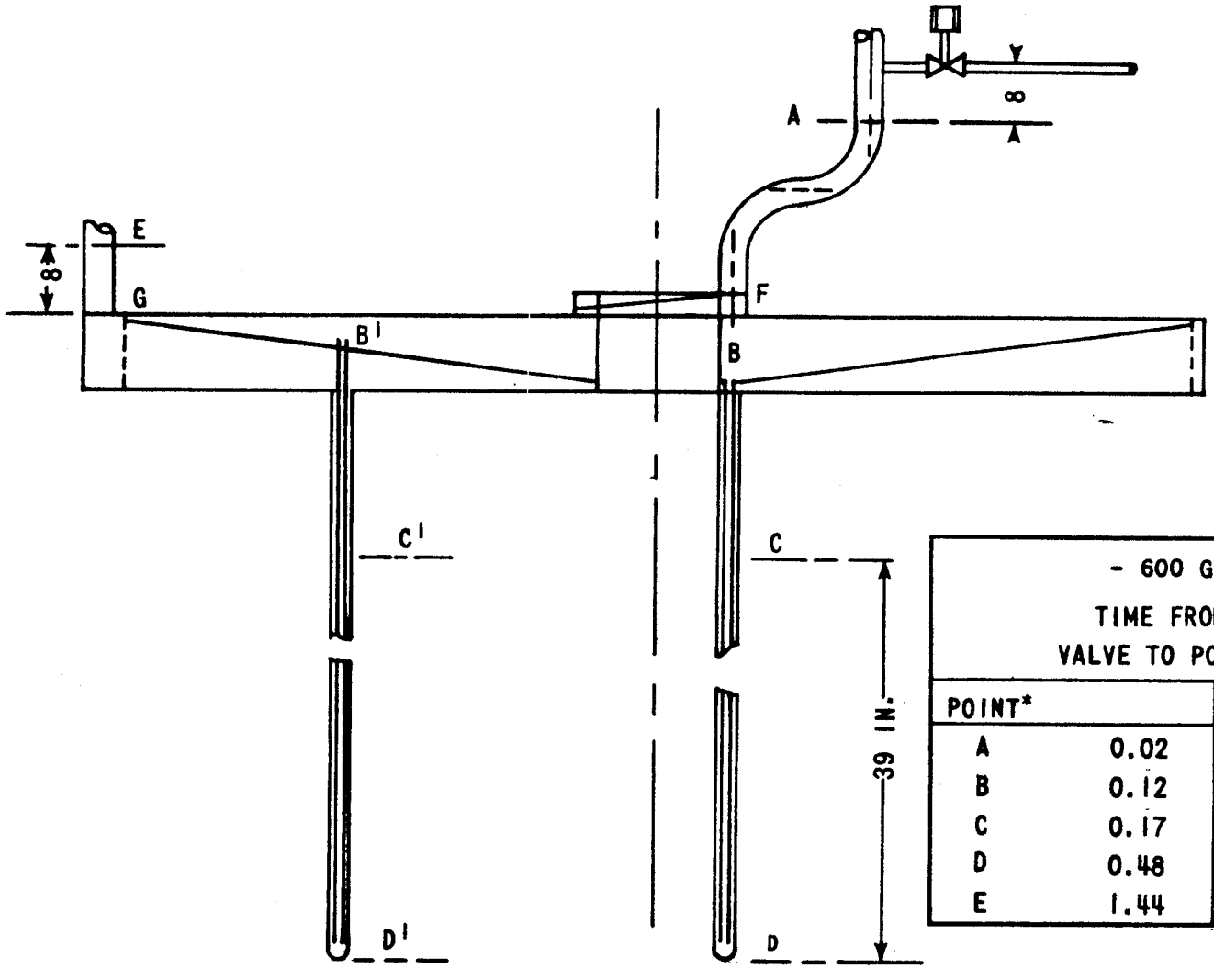

- 600 GPM FLOW - TIME FROM SOLENOID VALVE TO POINT - SECOND			
POINT*		POINT**	
A	0.02	A'	-
B	0.12	B'	0.28
C	0.17	C'	0.33
D	0.48	D'	0.64
E	1.44	E'	1.67

* VALUES AT POINTS A, B, ETC, REPRESENT MINIMUM TIMES.

** VALUE AT POINT A', B', ETC. REPRESENT TIMES TO A TUBE AT THE AVERAGE RADIUS.

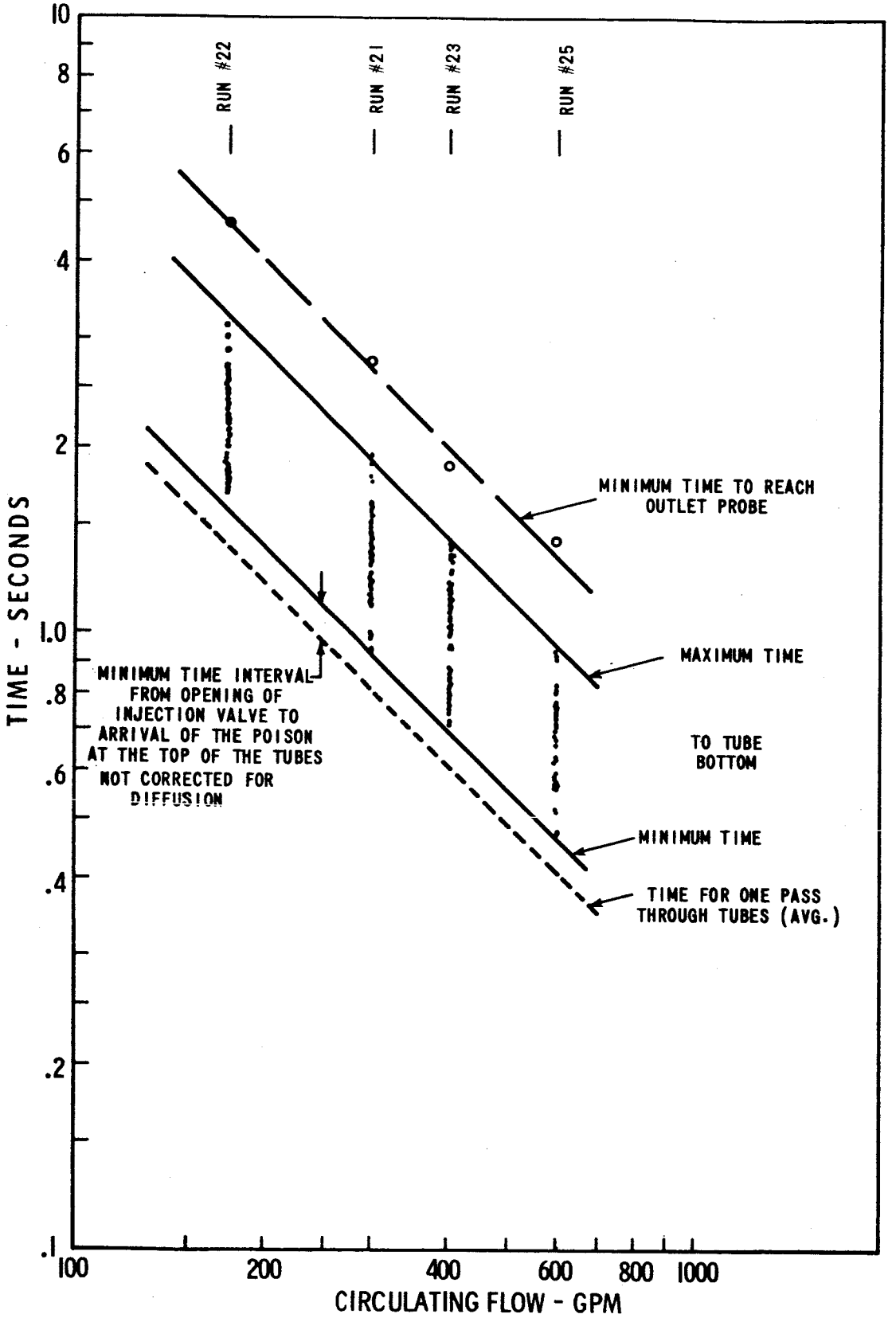

SOLUTION INJECTION TESTS

Figure V-8

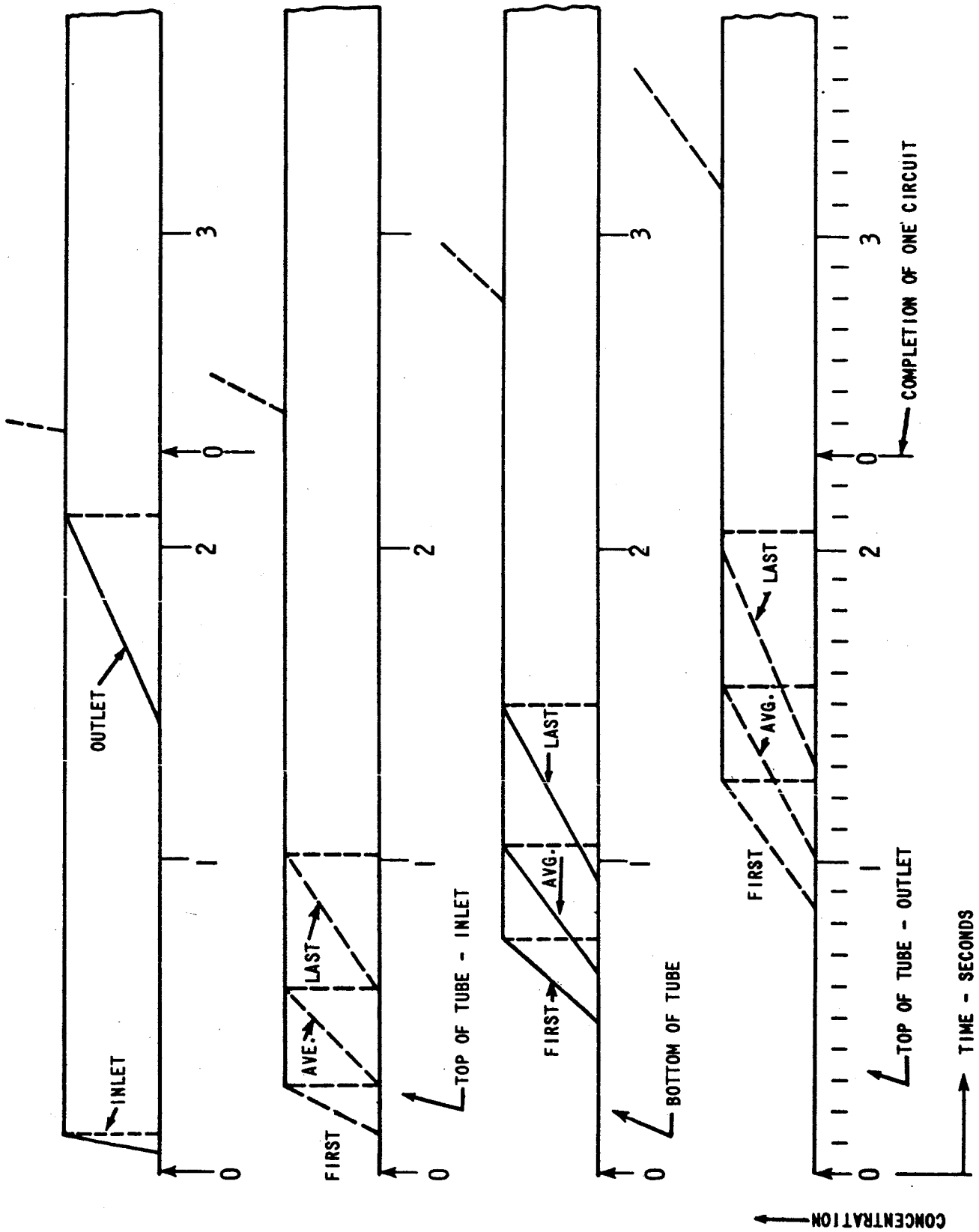

RUN #25 - 600 GPM CHANGE IN CONCENTRATION vs. TIME AFTER SOLENOID VALVE OPENING

Figure V-9

Figure V-9

Curve V-9 was cross plotted to show in Figure V-10 and V-11 the concentration distribution in the tubes at any time between injection and completion of one circuit after injection. Figure V-11 was obtained by defining three groups of tubes located centrally, average radius and peripherally and calculating the progress of concentration change rather than using the times for each individual tube. The percentage of the total poison tube length of the core that has undergone the concentration change is also shown, as a dotted curve. The normalized tube length completing the change can be translated into core volume fraction.

The time required for completion of one pass through the CPLS Reference System was calculated for 600 gpm from knowledge of the volumes, shapes, and mean velocities in the components:

	Volume Gallons	Length Ft.	Mean Velocity Ft/sec	Mean Residence Time Seconds	Approx. Pres. Drop psi
Piping, including pump and valves	3.6	12	23.8	0.366	
Distribution manifold	6.92	-	2.5	1.666*	90
Poison tubes	7.84	4.5	10.7		
Heat exchanger	4.2	3	14	0.214	50
Total Circuit	22.56	-	-	2.246	140
Check	22.56 x 60 sec/min ÷ 600 gpm = 2.26 sec.				

*From measurements.

Figure V-9 shows that it takes 2.1 seconds for a fixed concentration change throughout the manifold to be completed. If the injection valve remains open a further increase in concentration takes place as the mixing front completes one circuit. But since the total circuit time (about 2.3 seconds) is longer than the time for completion of the concentration change in the manifold, the maximum difference in concentration between tubes that can exist is that at the beginning, when some tubes have completed the first change while others have not yet started to be reached by the concentration increase. Table V-2 shows that for 600 gpm and an injection rate near 0.212 gpm this maximum difference is well below 5% of the loop concentration (Runs 24 and 25); in Run 25 the injection rate was four times the nominal one. This produced a quadruple change in the loop concentration and the visicorder deflection.

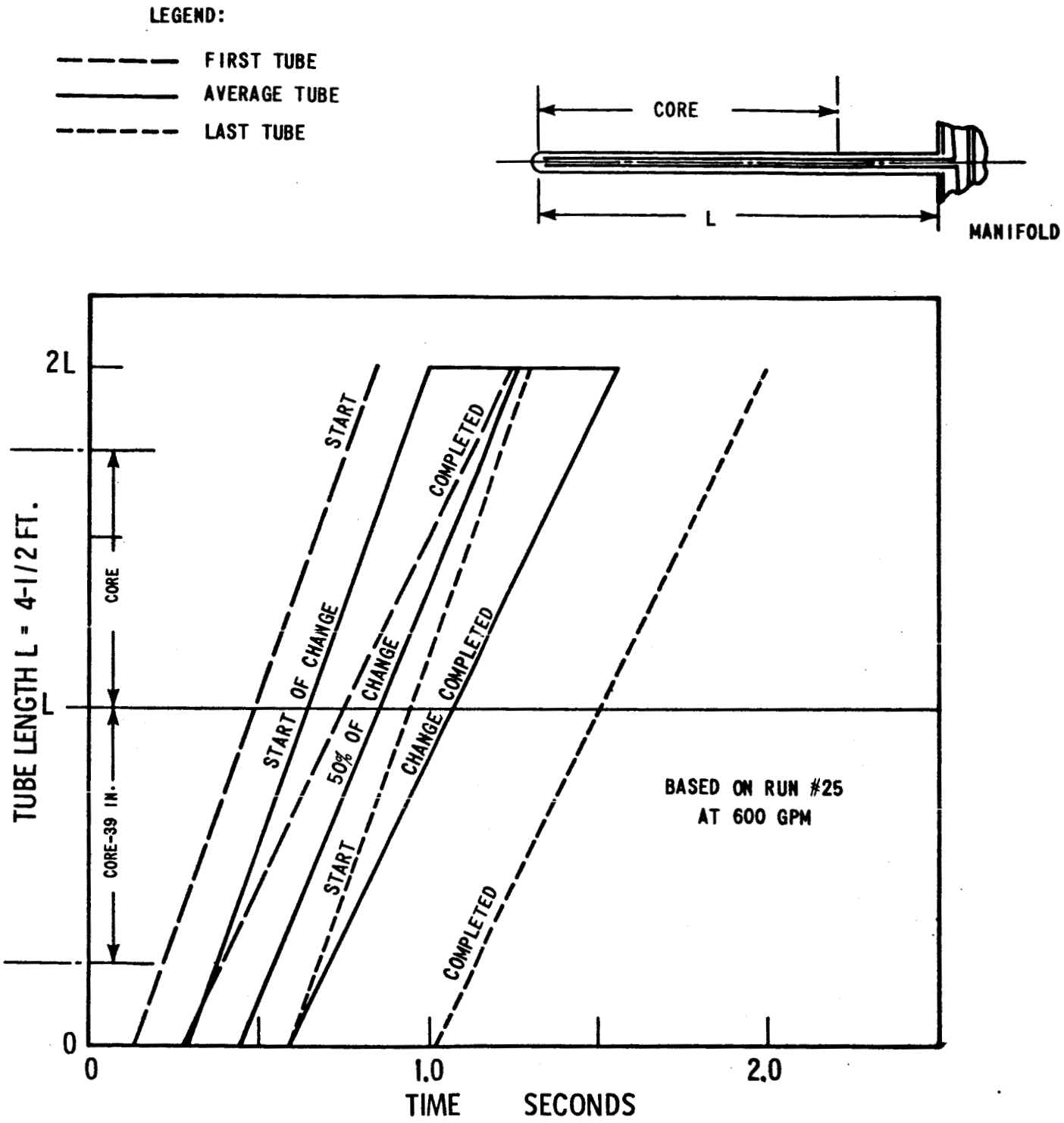

LOCATION OF CONCENTRATION CHANGE IN TUBES vs. TIME AFTER SOLENOID VALVE OPENING CONSTANT INJECTION RATE

Figure V-10

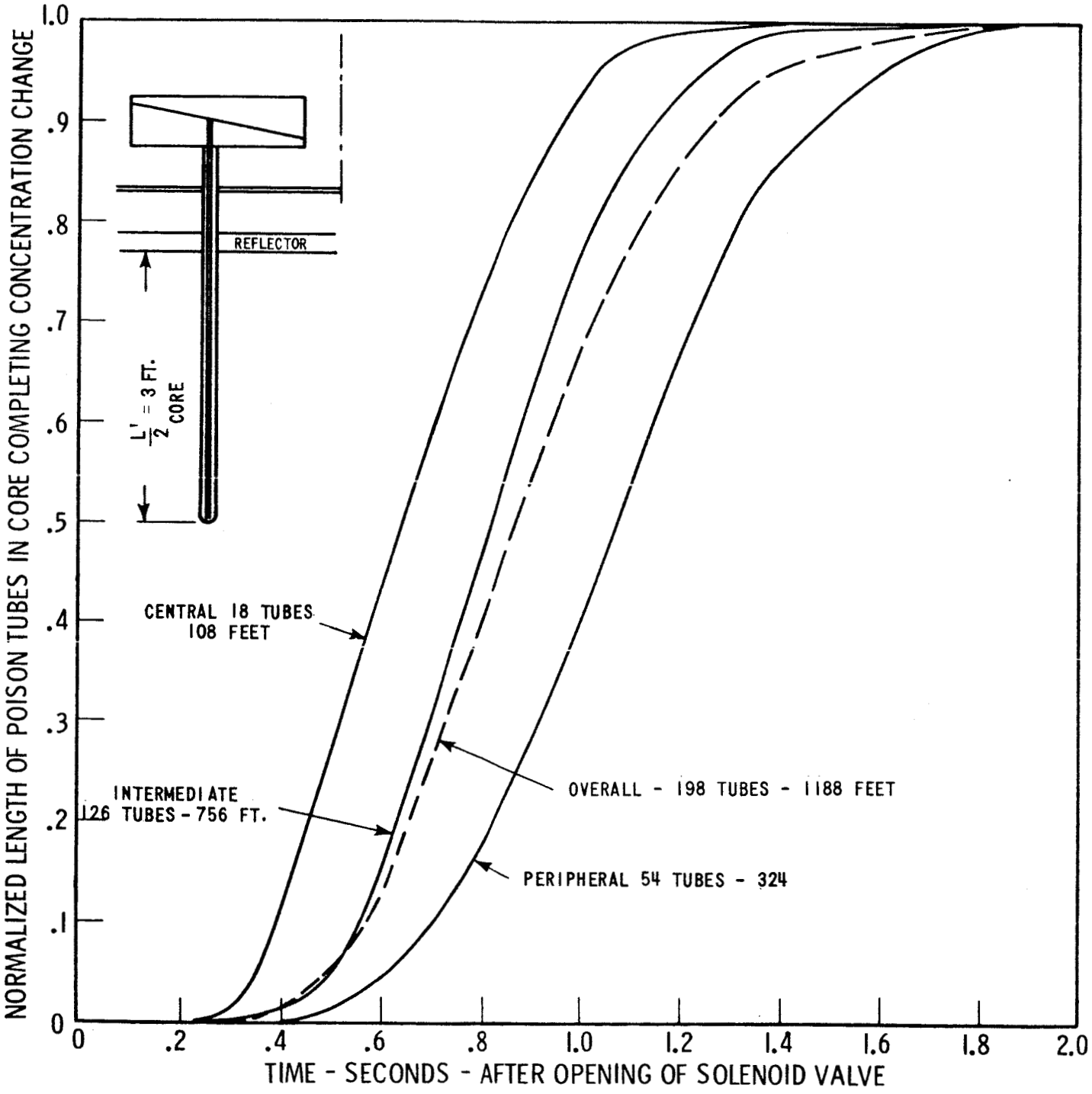

EXTENT OF COMPLETION OF CONCENTRATION CHANGE IN THE TUBES INSIDE THE CORE vs. TIME AFTER OPENING OF THE INJECTION VALVE

Figure V-11

Normal concentration change for 0.212 gpm injection rate would have been less than 6.40% ÷ 4 = 1.6%.

In summary the solution injection tests demonstrated that:

a. At nominal flow (600 gpm) the injected concentrate will arrive at the top of about 18% of the number of tubes in 0.2 seconds or less (Figure V-6).

b. Within the range tested the time of arrival is independent of injection rate and injection concentration (Table V-2).

c. The time for the flow to pass through the manifold-re-entrant tube assembly is inversely proportional to the rate of flow (Figure V-8).

d. Within the specified rate and concentration ranges of injection the maximum concentration gradient is well below 5% (Table V-2).

APPENDIX A

DIGITAL COMPUTER PROGRAM "MATE"

1. General

The manifold test data reduction code was written to expedite test data conversion to a solution flow distribution array corresponding to the poison tube pattern. The code was also devised to normalize the array and to plot a histogram describing the number of tubes having normalized flow of various magnitudes.

The procedure consisted of taking photographs of the manometer boards and reading the photos by the Benson-Lehner scanner which converted the readings to integers from 1 to 999 punched on IBM cards in a specified array.

The code uses calibration data to convert the punched cards into flow rates in the tubes.

2. Algorithms

V(K) = SQRF ((Press (J-1)-Press (J)) * 0.060* 64.35* C/RHO)* .670

where V(K) = Flow velocity in tube K

K = Tube Number

J = 2 * K

Flow (K) = Flow in tube K, in gpm

Press(J) = Static pressure at pitot tube K

Press(J-1) = Total pressure of pitot tube K

C' = Flow coefficient - Temperature dependent input

RHO = Water density - Temperature dependent input

64.35 = gc'

0.060 = Scale factor for Benson-Lehner scanner

0.0670 = Flow profile factor (avg/max)

VNorm(K) = V(K)/(SUM V/SUM I)

where:

VNorm(K) = Normalized flow in tube K

V(K) = Flow velocity in tube K

SUM V = Sum of velocities in tubes 0 to K

SUM I = Number of tubes from 0 to K whose flow rate differs from zero.

3. Input Cards

Card Type 1	Title card, any text in locations 7 to 71 1 in location 72 if title is complete 0 in location 72 if more title cards follow.
Card Type 2	Format (2I3, 6X, F7.2, 8X, A4, 7X, 3I3) Configuration - two digit integer Temperature, °F - two digit integer > 64, < 81 Flow, GPM, four digit fixed point No. Run Number, four digit integer Date: Month, Day, Year - two digits integer each
Card Type 3	Format (F5.1, 9F6.1) 40 cards with ten three digit integers each (16.7 times the manometer reading)

```
      DIMENSION  P(396), PRESHG(5),          V(198),DELP(198),SUMV(199),MATE  1
     1           VNORM(198) , L(24) , VW(198)                          MATE  2
 1000 FORMAT (1H1)                                                     MATE  3
 1001 FORMAT (35H  TUBE VELOCITY DISTRIBUTION,FT/SEC)                  MATE  4
 1002 FORMAT (72H0                                                     MATE  5
     1                    )                                            MATE  51
 1005 FORMAT (39H  TUBE VELOCITY DISTRIBUTION,NORMALIZED)              MATE  6
 1010 FORMAT (2I3,6X,F7.2,8X,A4,7X,3I3)                                MATE  7
 1020 FORMAT(F5.1, 9F6.1 )                                             MATE  8
 1035 FORMAT (28H0 TEMPERATURE IS OUT OF RANGE)                        MATE 10
 1040 FORMAT (2X,8H NCON = I2,3X,8HNTEMP = I3,3X,8H FLOW = F5.1,3X,9H  MATE 11
     1NRUN = A4,3X,6H DATE 3I3)                                        MATE 111
 1045 FORMAT  (71H                                                     MATE 12
     1                  I1)                                            MATE 121
 1050 FORMAT (72H                                                      MATE 13
     1                  )                                              MATE 131
 1055 FORMAT (40H1 MANIFOLD DATA REDUCTION, F.C.ENGEL,APD)             MATE 14
   10 WOT  6,1055                                                      MATE 15      NON-STANDARD
   15 WOT  6,1050                                                      MATE 17      NON-STANDARD
   11 RIPT 5,1045, ICHK                                                MATE 16      NON-STANDARD
      WOT  6,1045,ICHK                                                 MATE 181     NON-STANDARD
              IF(ICHK) 11,11,16                                        MATE 18
      ABOVE READS IN ADDITIONAL INFORMATION ON CONFIGURATIONS ETC.     MATE 19
   16 CONTINUE                                                         MATE 20
      RIPT 5,1010,NCON,NTEMP,FLOW,NRUN,NMO,NDAY,NYEAR                  MATE 21      NON-STANDARD
      RIPT 5,1020, (P(J),J=1,396)                                      MATE 22      NON-STANDARD
   18         IF(NTEMP-65)20,22,25                                     MATE 24
   20         WOT 6, 1035                                              MATE 25      NON-STANDARD
              GO TO 889                                                MATE 26
   22         RHO=62.305                                               MATE 27
              C=5.2877                                                 MATE 28
              GO TO 50                                                 MATE 281
   25         KTEMP=NTEMP-65                                           MATE 29
              GO TO (31,32,33,34,35,36,37,38,39,40,41,42,43,44,45),KTEMPMATE 30
              C=144X.03672 FOR 65F,FIG77,ASME.FLUID METERS,RHO,KEENAN+K.MATE 301
   31         RHO=62.297                                               MATE 31
              C=5.2819                                                 MATE 32
              GO TO 50                                                 MATE 33
   32         RHO=62.289                                               MATE 34
              C=5.2762                                                 MATE 35
              GO TO 50                                                 MATE 36
   33         RHO=62.281                                               MATE 37
```

```
120         IF(P(J))125,125,122                                  MATE 80
122         IF(P(J-1))125,125,130                                MATW 81
125         V(K)=0.0                                             MATE 82
            GO TO 145                                            MATE 83
130         DELP(K)=(P(J-1)-P(J))*0.060                          MATE 84
            V(K)= SQRTF(DELP(K)*64.35*C/RHO)*0.670               MATE 85
145         CONTINUE                                             MATE 86
            GO TO 249                                            MATE 87
150         CONTINUE                                             MATE 88
            SECOND CONFIGURATION                                 MATE 891
151         DO 170 M=1,198                                       MATE89
            J=2*M                                                MATE 90
            K=2*M-1                                              MATE 901
            IF(P(J))155,155,152                                  MATE 91
152         IF(P(J-1))155,155,160                                MATE 92
155         V(K)=0.0                                             MATE 93
            GO TO 170                                            MATE 94
160         DELP(M)=(P(J-1)-P(J))*0.060                          MATE 95
            V(J)=0                                               MATE 951
            V(K)=SQRTF(DELP(M)*64.35*C/RHO) *0.670               MATE 96
170         CONTINUE                                             MATE 97
            GO TO 249                                            MATE 98
200         CONTINUE                                             MATE 981
            THIRD CONFIGURATION                                  MATE 99
202         GO TO 249                                            MATE 991
249         CONTINUE                                             MATE110
250         SUMV=0                                               MATE111
            I=0                                                  MATE112
251         DO 256  K=1,198                                      MATE113
            IF(V(K))256,256,255                                  MATE114
255         SUMV=SUMV+V(K)                                       MATE118
            I=I+1                                                MATE119
            SUMI=I                                               MATE1191
256         CONTINUE                                             MATE120
257         VAVG = SUMV/SUMI                                     MATE121
260         DO 275  K=1,198                                      MATE122
            IF(V(K))262,262,270                                  MATE123
262         VNORM(K)=0.0                                         MATE124
            GO TO 275                                            MATE125
270         VNORM(K) = V(K)/VAVG                                 MATE126
275         CONTINUE                                             MATE127
            GO TO 295                                            MATE128
295         CONTINUE                                             MATE129
```

```
296   WOT 6, 1055                                                    MATE6291    NON-STANDARD
      WOT 6, 1002                                                    MATE1292    NON-STANDARD
      WOT 6, 1002                                                    MATE1293    NON-STANDARD
297   WOT 6, 1001                                                    MATE130     NON-STANDARD
      WOT 6, 1002                                                    MATE1301    NON-STANDARD
301   FORMAT (39X,2F6.2,4X,2F6.2,37X,3H 21)                          MATE1310
302   FORMAT (31X,2F6.2,4X,2F6.2,4X,2F6.2,29X,3H 20)                 MATE1311
303   FORMAT (23X,2F6.2,4X,2F6.2,4X,2F6.2,4X,2F6.2,21X,3H 19)        MATE1312
304   FORMAT (15X,2F6.2,4X,2F6.2,4X,2F6.2,4X,2F6.2,4X,2F6.2,13X,3H 18) MATE1313
305   FORMAT (13X,F6.2,4X,2F6.2,4X,2F6.2,4X,2F6.2,4X,2F6.2,4X,F6.2,11X,MATE1314
    1          3H 17)                                                 MATE1315
306   FORMAT (15X,2F6.2,4X,2F6.2,4X,2F6.2,4X,2F6.2,4X,2F6.2,13X,3H 16) MATE1316
307   FORMAT (7X,2F6.2,4X,2F6.2,4X,2F6.2,4X,2F6.2,4X,2F6.2,4X,2F6.2,5X,MATE1317
    1          3H 15)                                                 MATE1318
308   FORMAT (5X,F6.2,4X,2F6.2,4X,2F6.2,4X,2F6.2,4X,2F6.2,4X,2F6.2,4X, MATE1319
    1          F6.2,3X,3H 14)                                         MATE1320
309   FORMAT (7X,2F6.2,4X,2F6.2,4X,2F6.2,4X,2F6.2,4X,2F6.2,4X,2F6.2,5X,MATE1321
    1          3H 13)                                                 MATE1322
310   FORMAT (5X,F6.2,4X,2F6.2,4X,2F6.2,20X,2F6.2,4X,2F6.2,4X,F6.2,3X, MATE1323
    1          3H 12)                                                 MATE1324
311   FORMAT (7X,2F6.2,4X,2F6.2,4H   * F6.2,16X,F6.2,4X,2F6.2,4X,2F6.2, MATE1325
    1          8H    ** 11)                                           MATE1326
312   FORMAT (5X,F6.2,4X,2F6.2,4X,2F6.2,20X,2F6.2,4X,2F6.2,4X,F6.2,3X, MATE1327
    1          3H 10)                                                 MATE1328
313   FORMAT (7X,2F6.2,4X,2F6.2,4X,2F6.2,4X,2F6.2,4X,2F6.2,4X,2F6.2,5X,MATE1329
    1          3H 09)                                                 MATE1330
314   FORMAT (5X,F6.2,4X,2F6.2,4X,2F6.2,4X,2F6.2,4X,2F6.2,4X,2F6.2,4X, MATE1331
    1          F6.2,3X,3H 08)                                         MATE1332
315   FORMAT (7X,2F6.2,4X,2F6.2,4X,2F6.2,4X,2F6.2,4X,2F6.2,4X,2F6.2,5X,MATE1333
    1          3H 07)                                                 MATE1334
316   FORMAT (15X,2F6.2,4X,2F6.2,4X,2F6.2,4X,2F6.2,4X,2F6.2,13X,3H 06) MATE1335
317   FORMAT (13X,F6.2,4X,2F6.2,4X,2F6.2,4X,2F6.2,4X,2F6.2,4X,F6.2,11X,MATE1336
    1          3H 05)                                                 MATE1337
318   FORMAT (15X,2F6.2,4X,2F6.2,4X,2F6.2,4X,2F6.2,4X,2F6.2,13X,3H 04) MATE1338
319   FORMAT (23X,2F6.2,4X,2F6.2,4X,2F6.2,4X,2F6.2,21X,3H 03)        MATE1339
320   FORMAT (31X,2F6.2,4X,2F6.2,4X,2F6.2,29X,3H 02)                 MATE1340
321   FORMAT (39X,2F6.2,4X,2F6.2,37X,3H 01)                          MATE1341
323   FORMAT (100H0        A B      C D      E F      G H      I J      K L  MATE135
    1   M N      O P      Q R      S T      U V      W X )                  MATE136
      WOT 6, 301,(V(K),K=1,4)                                        MATE140     NON-STANDARD
      WOT 6, 302,(V(K),K=5,10)                                       MATE141     NON-STANDARD
      WOT 6, 303,(V(K),K=11,18)                                      MATE142     NON-STANDARD
      WOT 6, 304,(V(K),K=19,28)                                      MATE143     NON-STANDARD
```

```
      WOT 6, 305,(V(K),K=29,38)                                        MATE144    NON-STANDARD
      WOT 6, 306,(V(K),K=39,48)                                        MATE145    NON-STANDARD
      WOT 6, 307,(V(K),K=49,60)                                        MATE146    NON-STANDARD
      WOT 6, 308,(V(K),K=61,72)                                        MATE147    NON-STANDARD
      WOT 6, 309,(V(K),K=73,84)                                        MATE148    NON-STANDARD
      WOT 6, 310,(V(K),K=85,94)                                        MATE149    NON-STANDARD
      WOT 6, 311,(V(K),K=95,104)                                       MATE150    NON-STANDARD
      WOT 6, 312,(V(K),K=105,114)                                      MATE151    NON-STANDARD
      WOT 6, 313,(V(K),K=115,126)                                      MATE152    NON-STANDARD
      WOT 6, 314,(V(K),K=127,138)                                      MATE153    NON-STANDARD
      WOT 6, 315,(V(K),K=139,150)                                      MATE154    NON-STANDARD
      WOT 6, 316,(V(K),K=151,160)                                      MATE155    NON-STANDARD
      WOT 6, 317,(V(K),K=161,170)                                      MATE156    NON-STANDARD
      WOT 6, 318,(V(K),K=171,180)                                      MATE157    NON-STANDARD
      WOT 6, 319,(V(K),K=181,188)                                      MATE158    NON-STANDARD
      WOT 6, 320,(V(K),K=189,194)                                      MATE159    NON-STANDARD
      WOT 6, 321,(V(K),K=195,198)                                      MATE160    NON-STANDARD
      WOT 6, 1002                                                      MATE161    NON-STANDARD
      WOT 6, 323                                                       MATE1611   NON-STANDARD
      WOT 6, 1002                                                      MATE162    NON-STANDARD
340   WOT 6, 1040, NCON,NTEMP,FLOW,NRUN,NMO,NDAY,NYEAR                 MATE163    NON-STANDARD
      WOT  6,1050                                                      MATE1641   NON-STANDARD
      WOT  6,1050                                                      MATE1642   NON-STANDARD
      WOT  6,1050                                                      MATE1643   NON-STANDARD
342   WOT  6, 384                                                      MATE1644   NON-STANDARD
      WOT 6, 1055                                                      MATE165    NON-STANDARD
      WOT 6, 1002                                                      MATE166    NON-STANDARD
      WOT 6, 1002                                                      MATE1661   NON-STANDARD
      WOT 6, 1005                                                      MATE167    NON-STANDARD
      WOT 6, 1002                                                      MATE1670   NON-STANDARD
361   FORMAT (38X,2F5.2,2X,2F5.2,28X,3H 21)                            MATE1671
362   FORMAT (32X,2F5.2,2X,2F5.2,2X,2F5.2,22X,3H 20)                   MATE1672
363   FORMAT (26X,2F5.2,2X,2F5.2,2H +2F5.2,2X,2F5.2,16X,3H 19)         MATE1673
364   FORMAT (20X,2F5.2,2X,2F5.2,2X,2F5.2,2X,2F5.2,2X,2F5.2,10X,3H 18) MATE1674
365   FORMAT (19X,F5.2,2X,2F5.2,2H +2F5.2,2H +2F5.2,2H +2F5.2,2X,F5.2, MATE1675
    1          9X,3H 17)                                              MATE1676
366   FORMAT (20X,2F5.2,2H +2F5.2,2H +2F5.2,2H +2F5.2,2H +2F5.2,10X,   MATE1677
    1          3H 16)                                                 MATE1678
367   FORMAT (14X,2F5.2,2H +2F5.2,2H +2F5.2,2X,2F5.2,2H +2F5.2,2H +    MATE1678
    1          2F5.2,4X,3H 15)                                        MATE1679
368   FORMAT (13X,F5.2,2X,2F5.2,2H +2F5.2,2X,2F5.2,2X,2F5.2,2H +2F5.2, MATE1680
    1          2X,F5.2,3X,3H 14)                                      MATE1681
369   FORMAT (14X,2F5.2,2H +2F5.2,2X,2F5.2,2X,2F5.2,2X,2F5.2,2H +2F5.2,MATE1682
```

```
    1          4X,3H 13)                                                    MATE1683
  370  FORMAT (13X,F5.2,2X,2F5.2,2H +2F5.2,14X,2F5.2,2H +2F5.2,2X,F5.2,     MATE1684
    1          3X,3H 12)                                                    MATE1685
  371  FORMAT (14X,2F5.2,2H +2F5.2,2H •F5.2,12X,F5.2,2X,2F5.2,2H +2F5.2,    MATE1686
    1          7H  ** 11)                                                   MATE1687
  372  FORMAT (13X,F5.2,2X,2F5.2,2H +2F5.2,14X,2F5.2,2H +2F5.2,2X,F5.2,     MATE1688
    1          3X,3H 10)                                                    MATE1689
  373  FORMAT (14X,2F5.2,2H +2F5.2,2X,2F5.2,2X,2F5.2,2X,2F5.2,2H +2F5.2,    MATE1690
    1          4X,3H 09)                                                    MATE1691
  374  FORMAT (13X,F5.2,2X,2F5.2,2H +2F5.2,2X,2F5.2,2X,2F5.2,2H +2F5.2,     MATE1692
    1          2X,F5.2,3X,3H 08)                                            MATE1693
  375  FORMAT (14X,2F5.2,2H +2F5.2,2H +2F5.2,2X,2F5.2,2H +2F5.2,2H +        MATE1694
    1          2F5.2,4X,3H 07)                                              MATE1695
  376  FORMAT (20X,2F5.2,2H +2F5.2,2H +2F5.2,2H +2F5.2,2H +2F5.2,10X,       MATE1696
    1          3H 06)                                                       MATE1697
  377  FORMAT (19X,F5.2,2X,2F5.2,2H +2F5.2,2H +2F5.2,2H +2F5.2,2X,F5.2,     MATE1697
    1          9X,3H 05)                                                    MATE1698
  378  FORMAT (20X,2F5.2,2X,2F5.2,2X,2F5.2,2X,2F5.2,2X,2F5.2,10X,3H 04)     MATE1699
  379  FORMAT (26X,2F5.2,2X,2F5.2,2H +2F5.2,2X,2F5.2,16X,3H 03)             MATE1700
  380  FORMAT (32X,2F5.2,2X,2F5.2,2X,2F5.2,22X,3H 02)                       MATE1701
  381  FORMAT (38X,2F5.2,2X,2F5.2,28X,3H 01)                                MATE1702
  383  FORMAT(85H0                A B   C D   E F   G H   I J   K L   M N   MATE1704
    1  O P   Q R   S T   U V   W X )                                        MATE1705
  384  FORMAT (14X,42H *  INLET       **  OUTLET       +  TIE BOLT )       MATE1706
  385  WOT 6, 361,(VNORM(K),K=1,4)                                          MATE171     NON-STANDARD
       WOT 6, 362,(VNORM(K),K=5,10)                                         MATE172     NON-STANDARD
       WOT 6, 363,(VNORM(K),K=11,18)                                        MATE173     NON-STANDARD
       WOT 6, 364,(VNORM(K),K=19,28)                                        MATE174     NON-STANDARD
       WOT 6, 365,(VNORM(K),K=29,38)                                        MATE175     NON-STANDARD
       WOT 6, 366,(VNORM(K),K=39,48)                                        MATE176     NON-STANDARD
       WOT 6, 367,(VNORM(K),K=49,60)                                        MATE177     NON-STANDARD
       WOT 6, 368,(VNORM(K),K=61,72)                                        MATE178     NON-STANDARD
       WOT 6, 369,(VNORM(K),K=73,84)                                        MATE179     NON-STANDARD
       WOT 6, 370,(VNORM(K),K=85,94)                                        MATE180     NON-STANDARD
       WOT 6, 371,(VNORM(K),K=95,104)                                       MATE181     NON-STANDARD
       WOT 6, 372,(VNORM(K),K=105,114)                                      MATE182     NON-STANDARD
       WOT 6, 373,(VNORM(K),K=115,126)                                      MATE183     NON-STANDARD
       WOT 6, 374,(VNORM(K),K=127,138)                                      MATE184     NON-STANDARD
       WOT 6, 375,(VNORM(K),K=139,150)                                      MATE185     NON-STANDARD
       WOT 6, 376,(VNORM(K),K=151,160)                                      MATE186     NON-STANDARD
       WOT 6, 377,(VNORM(K),K=161,170)                                      MATE187     NON-STANDARD
       WOT 6, 378,(VNORM(K),K=171,180)                                      MATE188     NON-STANDARD
       WOT 6, 379,(VNORM(K),K=181,188)                                      MATE189     NON-STANDARD
```

```
      WOT 6, 380,(VNORM(K),K=189,194)                                  MATE190    NON-STANDARD
      WOT 6, 381,(VNORM(K),K=195,198)                                  MATE191    NON-STANDARD
      WOT 6, 1050                                                      MATE192    NON-STANDARD
 388  WOT 6, 383                                                       MATE197    NON-STANDARD
      WOT 6, 1002                                                      MATE199    NON-STANDARD
 389  WOT 6, 1040, NCON,NTEMP,FLOW,NRUN,NMO,NDAY,NYEAR                 MATE200    NON-STANDARD
      WOT  6,1050                                                      MATE2001   NON-STANDARD
      WOT  6,1050                                                      MATE2002   NON-STANDARD
      WOT  6,1050                                                      MATE2003   NON-STANDARD
      WOT  6, 384                                                      MATE2004   NON-STANDARD
      WOT 6, 1002                                                      MATE201    NON-STANDARD
1110  FORMAT (1H+28X  1H*)                                             MATE205
1115  FORMAT (1H+28X  2H**)                                            MATE206
1120  FORMAT (1H+28X  3H***)                                           MATE207
1125  FORMAT (1H+28X  4H****)                                          MATE208
1130  FORMAT (1H+28X  5H****$)                                         MATE209
1135  FORMAT (1H+28X  6H****$*)                                        MATE210
1140  FORMAT (1H+28X  7H****$**)                                       MATE211
1145  FORMAT (1H+28X  8H****$***)                                      MATE212
1150  FORMAT (1H+28X  9H****$****)                                     MATE213
1155  FORMAT (1H+28X 10H****$****$)                                    MATE214
1160  FORMAT (1H+28X 11H****$****$*)                                   MATE215
1165  FORMAT (1H+28X 12H****$****$**)                                  MATE216
1170  FORMAT (1H+28X 13H****$****$***)                                 MATE217
1175  FORMAT (1H+28X 14H****$****$****)                                MATE218
1180  FORMAT (1H+28X 15H****$****$****$)                               MATE219
1185  FORMAT (1H+28X 16H****$****$****$*)                              MATE220
1190  FORMAT (1H+28X 17H****$****$****$**)                             MATE221
1195  FORMAT (1H+28X 18H****$****$****$***)                            MATE222
1200  FORMAT (1H+28X 19H****$****$****$****)                           MATE223
1205  FORMAT (1H+28X 20H****$****$****$****$)                          MATE224
1210  FORMAT (1H+28X 21H****$****$****$****$*)                         MATE225
1215  FORMAT (1H+28X 22H****$****$****$****$**)                        MATE226
1220  FORMAT (1H+28X 23H****$****$****$****$***)                       MATE227
1225  FORMAT (1H+28X 24H****$****$****$****$****)                      MATE228
1230  FORMAT (1H+28X 25H****$****$****$****$****$)                     MATE229
1235  FORMAT (1H+28X 26H****$****$****$****$****$*)                    MATE230
1240  FORMAT (1H+28X 27H****$****$****$****$****$**)                   MATE231
1245  FORMAT (1H+28X 28H****$****$****$****$****$***)                  MATE232
1250  FORMAT (1H+28X 29H****$****$****$****$****$****)                 MATE233
1255  FORMAT (1H+28X 30H****$****$****$****$****$****$)                MATE234
1260  FORMAT (1H+28X 31H****$****$****$****$****$****$*)               MATE235
1265  FORMAT (1H+28X 32H****$****$****$****$****$****$**)              MATE236
```

```
1270  FORMAT (1H+28X 33H****$****$****$****$****$****$***)          MATE237
1275  FORMAT (1H+28X 34H****$****$****$****$****$****$****)         MATE238
1280  FORMAT (1H+28X 35H****$****$****$****$****$****$****$)        MATE239
1285  FORMAT   (////36X37H*********  FLOW  HISTOGRAM  *********)    MATE240
1290  FORMAT (15X,F4.2,3H - ,F4.2)                                   MATE241
            DO 410 N=1,24                                            MATE242
            L(N)=0                                                   MATE243
 410        CONTINUE                                                 MATE244
            DO 450  K=1,198                                          MATE245
            IF (VNORM(K)-0.75) 450,450,415                           MATE246
 415        IF (1.230-VNORM(K))450,420,420                           MATE247
 420        NRVEL = (100.0*VNORM(K)-75.0)*0.50+0.999                 MATE248
            GO TO (425,426,427,428,429,430,431,432,433,434,435,436,437MATE249
    1       ,438,439,440,441,442,443,444,445,446,447,448),NRVEL      MATE250
 425        L(01)=L(01)+1                                            MATE251
            GO TO 450                                                MATE252
 426        L(02)=L(02)+1                                            MATE253
            GO TO 450                                                MATE254
 427        L(03)=L(03)+1                                            MATE255
            GO TO 450                                                MATE256
 428        L(04)=L(04)+1                                            MATE257
            GO TO 450                                                MATE258
 429        L(05)=L(05)+1                                            MATE259
            GO TO 450                                                MATE260
 430        L(06)=L(06)+1                                            MATE261
            GO TO 450                                                MATE262
 431        L(07)=L(07)+1                                            MATE263
            GO TO 450                                                MATE264
 432        L(08)=L(08)+1                                            MATE265
            GO TO 450                                                MATE266
 433        L(09)=L(09)+1                                            MATE267
            GO TO 450                                                MATE268
 434        L(10)=L(10)+1                                            MATE269
            GO TO 450                                                MATE270
 435        L(11)=L(11)+1                                            MATE271
            GO TO 450                                                MATE272
 436        L(12)=L(12)+1                                            MATE273
            GO TO 450                                                MATE274
 437        L(13)=L(13)+1                                            MATE275
            GO TO 450                                                MATE276
 438        L(14)=L(14)+1                                            MATE277
            GO TO 450                                                MATE278
 439        L(15)=L(15)+1                                            MATE279
```

```
                GO TO 450                                          MATE280
 440            L(16)=L(16)+1                                      MATE281
                GO TO 450                                          MATE282
 441            L(17)=L(17)+1                                      MATE283
                GO TO 450                                          MATE284
 442            L(18)=L(18)+1                                      MATE285
                GO TO 450                                          MATE286
 443            L(19)=L(19)+1                                      MATE287
                GO TO 450                                          MATE288
 444            L(20)=L(20)+1                                      MATE289
                GO TO 450                                          MATE290
 445            L(21)=L(21)+1                                      MATE291
                GO TO 450                                          MATE292
 446            L(22)=L(22)+1                                      MATE293
                GO TO 450                                          MATE294
 447            L(23)=L(23)+1                                      MATE295
                GO TO 450                                          MATE296
 448            L(24)=L(24)+1                                      MATE297
                GO TO 450                                          MATE298
 450            CONTINUE                                           MATE299
        WOT 6, 1055                                                MATE300   NON-STANDARD
        WOT 6, 1050                                                MATE301   NON-STANDARD
        WOT 6, 1050                                                MATE304   NON-STANDARD
        WOT 6, 1285                                                MATE305   NON-STANDARD
        WOT 6, 1050                                                MATE306   NON-STANDARD
        WOT 6, 1050                                                MATE307   NON-STANDARD
                SUZY = 0.75                                        MATE308
                DO 499 N=1,24                                      MATE309
                LN = L(N)                                          MATE310
                ANET = SUZY + 0.020                                MATE311
        WOT 6, 1290,SUZY,ANET                                      MATE312   NON-STANDARD
                IF ( LN ) 499,499,460                              MATE313
 460            GO TO (461,462,463,464,465,466,467,468,469,470,471,472,   MATE314
    1           473,474,475,476,477,478,479,480,481,482,483,484,485,486,  MATE315
    2           487,488,489,490,491,492,493,494,495),LN            MATE316
 461    WOT 6, 1110                                                MATE317   NON-STANDARD
                GO TO 499                                          MATE318
 462    WOT 6, 1115                                                MATE319   NON-STANDARD
                GO TO 499                                          MATE320
 463    WOT 6, 1120                                                MATE321   NON-STANDARD
                GO TO 499                                          MATE322
 464    WOT 6, 1125                                                MATE323   NON-STANDARD
                GO TO 499                                          MATE324
```

```
465  WOT 6, 1130                                          MATE325    NON-STANDARD
           GO TO 499                                      MATE326
466  WOT 6, 1135                                          MATE327    NON-STANDARD
           GO TO 499                                      MATE328
467  WOT 6, 1140                                          MATE329    NON-STANDARD
           GO TO 499                                      MATE330
468  WOT 6, 1145                                          MATE331    NON-STANDARD
           GO TO 499                                      MATE332
469  WOT 6, 1150                                          MATE333    NON-STANDARD
           GO TO 499                                      MATE334
470  WOT 6, 1155                                          MATE335    NON-STANDARD
           GO TO 499                                      MATE336
471  WOT 6, 1160                                          MATE337    NON-STANDARD
           GO TO 499                                      MATE338
472  WOT 6, 1165                                          MATE339    NON-STANDARD
           GO TO 499                                      MATE340
473  WOT 6, 1170                                          MATE341    NON-STANDARD
           GO TO 499                                      MATE342
474  WOT 6, 1175                                          MATE343    NON-STANDARD
           GO TO 499                                      MATE344
475  WOT 6, 1180                                          MATE345    NON-STANDARD
           GO TO 499                                      MATE346
476  WOT 6, 1185                                          MATE347    NON-STANDARD
           GO TO 499                                      MATE348
477  WOT 6, 1190                                          MATE349    NON-STANDARD
           GO TO 499                                      MATE350
478  WOT 6, 1195                                          MATE351    NON-STANDARD
           GO TO 499                                      MATE352
479  WOT 6, 1200                                          MATE353    NON-STANDARD
           GO TO 499                                      MATE354
480  WOT 6, 1205                                          MATE355    NON-STANDARD
           GO TO 499                                      MATE356
481  WOT 6, 1210                                          MATE357    NON-STANDARD
           GO TO 499                                      MATE358
482  WOT 6, 1215                                          MATE359    NON-STANDARD
           GO TO 499                                      MATE360
483  WOT 6, 1220                                          MATE361    NON-STANDARD
           GO TO 499                                      MATE362
484  WOT 6, 1225                                          MATE363    NON-STANDARD
           GO TO 499                                      MATE364
485  WOT 6, 1230                                          MATE365    NON-STANDARD
           GO TO 499                                      MATE366
486  WOT 6, 1235                                          MATE367    NON-STANDARD
```

```
            GO TO 499                                                   MATE368
487   WOT 6, 1240                                                       MATE369     NON-STANDARD
            GO TO 499                                                   MATE370
488   WOT 6, 1245                                                       MATE371     NON-STANDARD
            GO TO 499                                                   MATE372
489   WOT 6, 1250                                                       MATE373     NON-STANDARD
            GO TO 499                                                   MATE374
490   WOT 6, 1255                                                       MATE375     NON-STANDARD
            GO TO 499                                                   MATE376
491   WOT 6, 1260                                                       MATE377     NON-STANDARD
            GO TO 499                                                   MATE378
492   WOT 6, 1265                                                       MATE379     NON-STANDARD
            GO TO 499                                                   MATE380
493   WOT 6, 1270                                                       MATE381     NON-STANDARD
            GO TO 499                                                   MATE382
494   WOT 6, 1275                                                       MATE383     NON-STANDARD
            GO TO 499                                                   MATE384
495   WOT 6, 1280                                                       MATE385     NON-STANDARD
499         SUZY=ANET                                                   MATE386
500         CONTINUE                                                    MATE387
      WOT 6, 1002                                                       MATE388     NON-STANDARD
501   WOT 6, 1040, NCON,NTEMP,FLOW,NRUN,NMO,NDAY,NYEAR                  MATE389     NON-STANDARD
580         DO 801 K=1,198                                              MATE390
582         IF (100-K) 602,601,600                                      MATE3901
600         GO TO(610,610,610,610,610,610,620,620,610,610,610,610,      MATE391
   1        620,620,620,620,610,610,610,610,620,620,630,630,620,620,    MATE392
   2        610,610,610,620,620,630,630,630,630,620,620,610,620,620,    MATE393
   3        630,630,640,640,630,630,620,620,610,620,630,630,640,640,    MATE394
   4        640,640,630,630,620,610,610,620,630,640,640,650,650,640,    MATE395
   5        640,630,620,610,610,620,630,640,650,650,650,650,640,630,    MATE396
   6        620,610,610,620,630,640,650,650,640,630,620,610,610,620,    MATE397
   7        630,640,650),K                                             MATE398
601         GO TO 650                                                   MATE3981
602         M=(K-100)                                                   MATE3982
603         GO TO          (640,630,620,610,610,620,630,640,650,650,    MATE3983
   1        640,630,620,610,610,620,630,640,650,650,650,650,640,630,    MATE399
   2        620,610,610,620,630,640,640,650,650,640,640,630,620,610,    MATE400
   3        610,620,630,630,640,640,640,640,630,630,620,610,620,620,    MATE401
   4        630,630,640,640,630,630,620,620,610,620,620,630,630,630,    MATE402
   5        630,620,620,610,610,610,620,620,630,630,620,620,610,610,    MATE403
   6        610,610,620,620,620,620,610,610,610,610,620,620,610,610,    MATE404
   7        610,610,610,610),M                                         MATE405
610         A=1.2816                                                    MATE406
```

```
              GO TO 800                                          MATE407
 620          A=1.0477                                           MATE408
              GO TO 800                                          MATE409
 630          A=0.9099                                           MATE410
              GO TO 800                                          MATE411
 640          A=0.8382                                           MATE412
              GO TO 800                                          MATE413
 650          A=0.8039                                           MATE414
              GO TO 800                                          MATE415
 800          CONTINUE                                           MATE416
 801          VW(K)=VNORM(K)*A                                   MATE417
 803   WOT 6, 1055                                               MATE418     NON-STANDARD
 804   WOT 6, 1002                                               MATE419     NON-STANDARD
 805   WOT 6, 1100                                               MATE420     NON-STANDARD
1100   FORMAT  (40H0 EFFECTIVE NORMALIZED FLOW DISTRIBUTION)     MATE421
 802          CONTINUE                                           MATE422
       WOT 6, 1002                                               MATE4221    NON-STANDARD
 860   WOT 6, 361,(VW(K),K=1,4)                                  MATE423     NON-STANDARD
       WOT 6, 362,(VW(K),K=5,10)                                 MATE424     NON-STANDARD
       WOT 6, 363,(VW(K),K=11,18)                                MATE425     NON-STANDARD
       WOT 6, 364,(VW(K),K=19,28)                                MATE426     NON-STANDARD
       WOT 6, 365,(VW(K),K=29,38)                                MATE427     NON-STANDARD
       WOT 6, 366,(VW(K),K=39,48)                                MATE428     NON-STANDARD
       WOT 6, 367,(VW(K),K=49,60)                                MATE429     NON-STANDARD
       WOT 6, 368,(VW(K),K=61,72)                                MATE430     NON-STANDARD
       WOT 6, 369,(VW(K),K=73,84)                                MATE431     NON-STANDARD
       WOT 6, 370,(VW(K),K=85,94)                                MATE432     NON-STANDARD
       WOT 6, 371,(VW(K),K=95,104)                               MATE433     NON-STANDARD
       WOT 6, 372,(VW(K),K=105,114)                              MATE434     NON-STANDARD
       WOT 6, 373,(VW(K),K=115,126)                              MATE435     NON-STANDARD
       WOT 6, 374,(VW(K),K=127,138)                              MATE436     NON-STANDARD
       WOT 6, 375,(VW(K),K=139,150)                              MATE437     NON-STANDARD
       WOT 6, 376,(VW(K),K=151,160)                              MATE438     NON-STANDARD
       WOT 6, 377,(VW(K),K=161,170)                              MATE439     NON-STANDARD
       WOT 6, 378,(VW(K),K=171,180)                              MATE440     NON-STANDARD
       WOT 6, 379,(VW(K),K=181,188)                              MATE441     NON-STANDARD
       WOT 6, 380,(VW(K),K=189,194)                              MATE44      NON-STANDARD
       WOT 6, 381,(VW(K),K=195,198)                              MATE443     NON-STANDARD
       WOT 6, 1050                                               MATE444     NON-STANDARD
 861   WOT 6, 383                                                MATE4441    NON-STANDARD
       WOT 6, 1002                                               MATE445     NON-STANDARD
 886   WOT 6, 1040, NCON,NTEMP,FLOW,NRUN,NMO,NDAY,NYEAR          MATE446     NON-STANDARD
       WOT 6, 1002                                               MATE447     NON-STANDARD
```

```
      WOT  6,1050                                                    NON-STANDARD
  888 WOT 6,  384                                   MATE4473         NON-STANDARD
  889         CONTINUE                              MATE4481
  890         GO TO 10                              MATE448
  900         END                                   MATE449
```

MANIFOLD DATA REDUCTION, F.C.ENGEL,APD

TUBE VELOCITY DISTRIBUTION,NORMALIZED

```
                                0.98 1.06   0.73 1.05                                  21
                         1.01 1.02   1.01 0.93   1.03 1.06                            20
                  1.07 0.98   0.   1.02 + 0.99 0.97   1.01 0.96                       19
           0.91 0.59   0.97 0.98   1.00 1.09   1.07 0.96   1.10 0.99                  18
          1.05   0.99 0.79 + 0.   1.01 + 0.   0.85 + 1.06 1.09   0.                   17
           1.03 0.96 + 0.   0.96 + 0.88 1.01 + 0.   1.09 + 1.06 0.95                  16
     0.99 1.08 + 1.07 0.98 + 1.02 1.18   1.06 0.95 + 1.14 0.77 + 0.98 0.97            15
    0.86   0.93 1.05 + 1.10 1.09   1.04 1.10   1.13 1.02 + 1.09 0.79   1.03           14
     1.08 1.04 + 0.   1.01   0.97 1.03   1.09 1.03   0.   1.08 + 1.02 1.01            13
    0.83   0.92 1.00 + 0.98 1.00                1.18 1.04 + 1.09 0.79   1.02           12
     1.02 0.96 + 0.   0.91 * 1.07              0.97   0.84 1.03 + 0.   1.08   **      11
    0.     0.   0.   + 0.   0.                  0.   0.   + 0.   0.     0.             10
     0.   0.   + 0.   0.     0.   0.     0.   0.     0.   0.   + 0.   0.              09
    0.     0.   0.   + 0.   0.     0.   0.     0.   0.   + 0.   0.     0.             08
     0.   0.   + 0.   0.   + 0.   0.     0.   0.   + 0.   0.   + 0.   0.              07
           1.02 0.   + 0.   0.   + 0.   0.   + 0.   0.   + 1.06 0.                    06
          0.     0.   0.   + 0.   0.   + 0.   0.   + 0.   0.     0.                   05
           0.   0.     1.03 0.     0.   0.     1.08 0.     0.   0.                    04
                 0.   0.     0.   0.   + 0.   0.     0.   0.                          03
                        0.   0.     0.   0.     0.   0.                                02
                                0.   0.     0.   0.                                    01

     A B   C D   E F   G H   I J   K L   M N   O P   Q R   S T   U V   W X

NCON =  1   NTEMP =  78    FLOW = 305.0     NRUN =   10    DATE   6 15 65

     *  INLET      **  OUTLET      +  TIE BOLT
```

Figure 3

MANIFOLD DATA REDUCTION, F.C.ENGEL,APD

```
                    *********  FLOW  HISTOGRAM  *********

0.75 - 0.77   *
0.77 - 0.79   ***
0.79 - 0.81
0.81 - 0.83
0.83 - 0.85   ***
0.85 - 0.87   *
0.87 - 0.89   *
0.89 - 0.91   **
0.91 - 0.93   **
0.93 - 0.95   **
0.95 - 0.97   ****$****
0.97 - 0.99   ****$****$*
0.99 - 1.01   ****$**
1.01 - 1.03   ****$****$****$***
1.03 - 1.05   ****$**
1.05 - 1.07   ****$***
1.07 - 1.09   ****$****$**
1.09 - 1.11   ****$
1.11 - 1.13   *
1.13 - 1.15   *
1.15 - 1.17
1.17 - 1.19   **
1.19 - 1.21
1.21 - 1.23

NCON =  1   NTEMP =  78   FLOW = 305.0   NRUN =   10   DATE   6 15 65
```

Figure 4

MANIFOLD DATA REDUCTION, F.C.ENGEL,APD

TUBE VELOCITY DISTRIBUTION,NORMALIZED

```
                                  0.99 1.07   0.97 0.99                                  21
                            0.98 1.01   1.01 0.      0.   0.                            20
                     0.   0.99   1.00 1.01 + 1.01 0.98   1.01 0.                        19
              0.80 0.     0.98 0.99   1.02 1.09   1.10 0.96   1.13 0.98                18
             1.11   1.00 0.80 + 0.   1.02 + 0.   0.85 + 1.07 1.08   0.                  17
              0.98 0.97 + 0.   0.96 + 0.90 1.18 + 0.   0.99 + 0.98 0.97                16
       0.98 1.09 + 0.95 0.99 + 1.18 0.96   1.06 0.   + 1.07 1.02 + 0.   0.             15
      0.87   0.95 0.97 + 1.09 1.04   1.03 0.91   1.01 1.00 + 1.02 0.     1.01          14
       1.08 1.05 + 0.   0.99   0.98 0.92   1.20 0.     0.   0.98 + 1.03 1.0            13
      0.84   0.92 0.96 + 0.98 1.00                0.   1.04 + 1.01 0.     0. 7          12
       1.00 0.98 + 0.   0.97 * 0.                1.03   0.84 0.98 + 0.   1.01   **     11
      0.     0.   0.   + 0.   0.                  0.   0.   + 0.   0.     0.            10
       0.   0.   + 0.   0.     0.   0.     0.   0.     0.   0.   + 0.   0.             09
      0.     0.   0.   + 0.   0.     0.   0.     0.   0.   + 0.   0.     0.            08
       0.   0.   + 0.   0.   + 0.   0.     0.   0.   + 0.   0.   + 0.   0.             07
              1.03 0.   + 0.   0.   + 0.   0.   + 0.   0.   + 1.05 0.                   06
             0.     0.   0.   + 0.   0.   + 0.   0.   + 0.   0.     0.                  05
              0.   0.     0.97 0.     0.   0.     1.01 0.     0.   0.                   04
                     0.   0.     0.   0.   + 0.   0.     0.   0.                         03
                            0.   0.     0.   0.     0.   0.                               02
                                  0.   0.     0.   0.                                     01

       A B   C D   E F   G H   I J   K L   M N   O P   Q R   S T   U V   W X

NCON =  1   NTEMP =  80    FLOW = 602.0     NRUN =   12    DATE   7  7 65

       *  INLET      **  OUTLET      +  TIE BOLT
```

Figure 5

MANIFOLD DATA REDUCTION, F.C.ENGEL,APD

********* FLOW HISTOGRAM *********

```
0.75 - 0.77
0.77 - 0.79
0.79 - 0.81   **
0.81 - 0.83
0.83 - 0.85   **
0.85 - 0.87   **
0.87 - 0.89
0.89 - 0.91   **
0.91 - 0.93   **
0.93 - 0.95   *
0.95 - 0.97   ****$**
0.97 - 0.99   ****$****$****$****$**
0.99 - 1.01   ****$****$***
1.01 - 1.03   ****$****$***
1.03 - 1.05   ****$
1.05 - 1.07   *
1.07 - 1.09   ****$
1.09 - 1.11   ****$
1.11 - 1.13   *
1.13 - 1.15
1.15 - 1.17
1.17 - 1.19   **
1.19 - 1.21   *
1.21 - 1.23
```

NCON = 1 NTEMP = 80 FLOW = 602.0 NRUN = 12 DATE 7 7 6

Figure 6

MANIFOLD DATA REDUCTION, F.C.ENGEL,APD

TUBE VELOCITY DISTRIBUTION,NORMALIZED

```
                                  1.03 1.07   0.74 1.07                                  21
                            0.99 1.03   1.01 0.94   0.97 1.03                          20
                      1.05 1.03   1.09 1.03 + 0.97 0.99   1.09 0.                      19
                1.03 0.58   1.03 1.03   0.97 1.17   1.03 1.01   1.13 1.03              18
               1.01   1.03 0.85 + 0.   1.09 + 0.   0.90 + 1.03 1.09   0.               17
                0.65 0.97 + 0.   0.97 + 0.92 1.03 + 0.   0.92 + 1.13 1.01              16
         1.07 1.05 + 1.07 1.03 + 0.99 1.20   1.09 1.07 + 1.09 0.80 + 0.   0.6[illegible]  15
        0.87   0.92 1.09 + 1.13 1.11   0.   1.03   0.97 1.07 + 1.09 0.77   1.07        14
         1.11 1.09 + 0.   1.07   1.01 0.99   1.07 1.03   0.   1.03 + 1.03 1.0          13
        0.87   0.97 0.99 + 1.07 1.03                1.30 1.03 + 1.09 0.80   1.[illegible]1  12
         1.07 0.94 + 0.65 0.99 * 0.97               0.85   0.85 0.92 + 0.   1.13  **  11
        0.     0.   0.   + 0.   0.                   0.   0.   + 0.   0.     0.         10
         0.   0.   + 0.   0.     0.   0.     0.   0.     0.   0.   + 0.   0.           09
        0.     0.   0.   + 0.   0.     0.   0.     0.   0.   + 0.   0.     0.         08
         0.   0.   + 0.   0.   + 0.   0.     0.   0.   + 0.   0.   + 0.   0.           07
                1.07 0.   + 0.   0.   + 0.   0.   + 0.   0.   + 1.09 0.                 06
               0.     0.   0.   + 0.   0.   + 0.   0.   + 0.   0.     0.               05
                0.   0.     0.99 0.     0.   0.     0.87 0.     0.   0.                 04
                      0.   0.     0.   0.   + 0.   0.     0.   0.                       03
                            0.   0.     0.   0.     0.   0.                             02
                                  0.   0.     0.   0.                                   01

         A B   C D   E F   G H   I J   K L   M N   O P   Q R   S T   U V   W X

NCON =  1   NTEMP =  80    FLOW =  70.0     NRUN =   13    DATE   7  7 65

         *  INLET      **  OUTLET      +  TIE BOLT
```

Figure 7

MANIFOLD DATA REDUCTION, F.C.ENGEL,APD

********* FLOW HISTOGRAM *********

```
0.75 - 0.77
0.77 - 0.79   *
0.79 - 0.81   **
0.81 - 0.83
0.83 - 0.85   ***
0.85 - 0.87
0.87 - 0.89   ***
0.89 - 0.91   *
0.91 - 0.93   ****
0.93 - 0.95   **
0.95 - 0.97   ****$***
0.97 - 0.99   ****$**
0.99 - 1.01   ****$*
1.01 - 1.03   ****$****$****$****$
1.03 - 1.05
1.05 - 1.07   **
1.07 - 1.09   ****$****$**
1.09 - 1.11   ****$****$****
1.11 - 1.13   ****
1.13 - 1.15
1.15 - 1.17   *
1.17 - 1.19
1.19 - 1.21   *
1.21 - 1.23
```

NCON = 1 NTEMP = 80 FLOW = 70.0 NRUN = 13 DATE 7 7 65

Figure 8

MANIFOLD DATA REDUCTION, F.C.ENGEL,APD

TUBE VELOCITY DISTRIBUTION,NORMALIZED

```
                                0.97 1.06   0.   0.                                  21
                         1.01 1.00   1.01 0.98   1.03 1.06                         20
                  1.10 0.96   0.98 0.96 + 0.98 0.98   1.02 0.                      19
          0.86 0.     0.96 0.98   0.98 1.08   1.08 0.96   1.13 0.96                18
         1.06   0.99 0.   + 0.   1.01 + 0.   0.84 + 1.06 1.09   0.                 17
          1.02 0.95 + 0.   0.89 + 0.   1.01 + 0.   0.96 + 1.05 1.09                16
   0.98 1.05 + 1.07 1.06 + 0.99 1.15   1.05 1.03 + 1.08 0.   + 0.   0.62          15
  0.     1.04 1.03 + 1.08 1.07   1.03 1.03   1.01 0.99 + 1.08 0.     1.82         14
   1.08 1.03 + 0.   1.00   1.04 1.01   1.08 1.05   0.   0.93 + 1.01 0.99          13
  0.85   0.94 0.96 + 0.99 1.00                1.12 1.05 + 1.08 0.     1.01         12
   0.99 0.96 + 0.68 0.91 * 0.                0.     0.83 0.95 + 1.07 1.09   **   11
  0.     0.   0.   + 0.   0.                  0.   0.   + 0.   0.95   0.           10
   0.   0.   + 0.   0.     0.   0.95   0.99 0.     0.   0.   + 0.   0.            09
  0.94   0.   0.   + 0.   0.     0.   0.     0.   0.   + 0.   0.88   0.           08
   0.   0.   + 0.   0.   + 0.   0.     0.   0.   + 0.   1.09 + 0.   0.            07
          1.02 0.   + 0.   0.   + 1.04 0.   + 0.   0.   + 1.05 0.                 06
         0.     0.   1.09 + 0.   0.   + 0.   0.   + 0.   0.     0.                05
          0.   1.00   1.00 0.     0.   0.     0.97 0.     0.   0.                 04
                0.   0.     0.   0.   + 0.   0.     0.   0.                        03
                      0.   0.     0.   0.     0.   0.                              02
                            0.   0.     0.75 0.                                    01

   A B   C D   E F   G H   I J   K L   M N   O P   Q R   S T   U V   W X
```

NCON = 1 NTEMP = 80 FLOW = 310.0 NRUN = 15 DATE 7 15 65

* INLET ** OUTLET + TIE BOLT

Figure 9

MANIFOLD DATA REDUCTION, F.C.ENGEL,APD

********* FLOW HISTOGRAM *********

```
0.75 - 0.77   *
0.77 - 0.79
0.79 - 0.81
0.81 - 0.83   *
0.83 - 0.85   **
0.85 - 0.87   *
0.87 - 0.89   *
0.89 - 0.91   **
0.91 - 0.93   *
0.93 - 0.95   ****$*
0.95 - 0.97   ****$****
0.97 - 0.99   ****$****$
0.99 - 1.01   ****$****$**
1.01 - 1.03   ****$****$*
1.03 - 1.05   ****$****$***
1.05 - 1.07   ****$**
1.07 - 1.09   ****$****$****
1.09 - 1.11   **
1.11 - 1.13   **
1.13 - 1.15
1.15 - 1.17   *
1.17 - 1.19
1.19 - 1.21
1.21 - 1.23
```

NCON = 1 NTEMP = 80 FLOW = 310.0 NRUN = 15 DATE 7 15 65

Figure 10

APPENDIX B

CAVITATION IN INLET ELBOWS

During the preliminary flow distribution tests the flow cavitated in the inlet and outlet short radius elbows. This manifested itself by a surging noise in the flow of about one cycle per second frequency and considerable vibration of the model. At 300 gpm the cavitation could be nearly suppressed by raising the back (outlet) pressure to 15 psi. At 450 gpm it continued full force with 10 psi back pressure. Observations with the help of a stethoscope pinpointed the source of the noise to be located at the centers (45°) of the two 90° inlet PVC elbows. These plastic (PVC) elbows were installed to give greater resiliancy and thus prevent cracking of the glued joint at the model inlet. The inlet elbows were replaced by long radius schedule 10 stainless steel elbows, which had been proposed earlier for the reference design. The outlet elbows were replaced by a straight pipe connection.

It had been assumed that the PVC elbows were of standard short radius schedule 40 dimensions. However it turned out on disassembly that their inside bend radius was practically zero, i.e. a sharp corner.

Assuming a radius of 1/32 inch and a flow profile approaching that of a free Vortex/5 ($V_{\Delta P}$ = constant) it could be calculated for the case of the elbow with a shrap inside turning radius, using the expressions and curve of TMB 575/6, that water, fairly well saturated with air because of the free interface in the supply tank, would have a static pressure well below the vapor pressure. Thus steady state cavitations should be expected. For the long radius elbows the static pressure was estimated by the same method to be 15 psi above vapor pressure so that there should be no cavitation. For the standard schedule 40 short radius elbow the static pressure was estimated to be 10 psi above vapor pressure. Here again no cavitation would be expected.

The same results were obtained by the use of the equation of the velocity profile in a bend contained in the paper of W. A. Marris./7

$$p = \frac{Vm^2}{} \times \frac{d^2}{\log_e \frac{R_o}{R_i}} \left[\frac{1}{R_i^2} - \frac{1}{(R_i + x)^2} \right]$$

where: p = static pressure at location x

R_i = inside radius of bend

R_o = outside radius of bend

d = width of channel = $R_o - R_i$

x = radial distance of location from the inside boundary

r = $R + x$ = radial distance to the location under consideration

V_m = spatial mean value of the mean traverse velocity over the channel width

APPENDIX C

DERIVATION AND USE OF MIXING LENGTH

from F. Sjenitzer - The Pipe Line engineer 1958)[4]

K = effective axial diffusivity, $m^2\ sec^{-1}$

a = pipe radius, m

$V = \frac{L}{t}$ = mean velocity in pipe, $m\ sec^{-1}$

L = pipe length, m

t = time for passage through pipe, sec

s = length of pipe containing contaminated liquid, m

y = fractional purity at either end of mixing zone

v = kinematic viscosity of SO/SO mixture, $m^2\ sec^{-1}$

γ = fanning friction factor

G. I. Taylor found that the ratio $\frac{K}{aV}$ depend solely on the fanning friction factor

$$\frac{K}{aV} = 10.1\sqrt{\tfrac{1}{2}\gamma} - 7.15\,\gamma^{\frac{1}{2}}$$

then $$s = 4\sqrt{Kt}\ \mathrm{erf}^{-1}\ (2g-1)$$

From test data:

$$\frac{K}{aV} = c\ \gamma^{n}\left(\frac{L}{a}\right)^{m}$$

where $c = 2.4 \times 10^{7}$

$n = 3.6$

$m = 0.141$

Combining and rearranging gives

$$S = 1.96 \times 10^4 \left(\frac{L}{a}\right)^{0.07} \sqrt{aL} - \gamma^{1.8} \text{ erf } (2y-1)$$

For inner poison tube

$L = 4.5$ ft

$a = \frac{0.340}{2}$ in.

$U = 10.7$ ft/sec

$\gamma = 0.0060$

erf $(2y-1)$ = erf $(0.99) = 1.640$

Total mixing length $S = 1.30$ ft

Forward diffusion $= \frac{S}{2} = 0.65$ ft

0.65 ft/10.7 ft/sec = 0.061 sec forward diffusion time

To obtain poison arrival at the top of the tubes find from test data:

(1) time after injection for first arrival of poison at bottom

(2) time for completion of concentration change at bottom

(3) the mean of 1 and 2, i.e. the time for the front to arrive at bottom of tube.

(4) transient time through tube; at 600 gpm 4.5 ft ÷ 10.7 ft + sec = 0.42 sec.

(5) forward diffusion length at top of tube

= forward diffusion length at bottom minus change of diffusion length in tube

$$\frac{S}{2} = \frac{(1) - (2)}{2} - 0.61 \text{ seconds at } 10.7 \text{ ft/sec}$$

(6) time for arrival at the top of the tubes equals arrival of the front at the bottom of the tube minus transit time through tube minus forward diffusion length. For 600 gpm this is:

$$\frac{(1) + (2)}{2} - 0.42 - \left(\frac{(1) - (2)}{2} - 0.61\right)$$

APPENDIX D

REFERENCES

1. NASA CR-54291 (WCAP-2690), "Analysis of Reference System, Task I, Feasibility of a Chemical Poison Loop System, February 1965."

2. NASA CR-54420 (WCAP-2803), "Design of Laboratory Tests, Task II, Feasibility of a Chemical Poison Loop System, June 1965."

3. A. Acrivos, et al., "Flow Distribution in Manifolds," Chem. Eng. Sc. 10, 1959, p. 112.

4. F. Sjenitzer, "How Much do Products Mix in a Pipe Line?", The Pipeline Engineer, December 1958, D31, p. 615.11.

5. Hunsaker & Rightmire, Engineering Application of Fluid Mechanics page 151, McGraw Hill 1947.

6. S. F. Crump, "Determination of Critical Pressures for the Inception of Cavitation in Fresh and Salt Water as Influenced by the Air Content of Water," Figure 13 TMB 575, October 1947, NS 713 - 065.

7. A. W. Marris, "Radial Distribution of Temporal-Mean Peripheral Velocity and Pressure for Fully Developed Turbulent Flow in Curved Channels," p. 528, TR. A.S.M.E., Jrl. Basic Engrg. September 1960.

Distribution List

NASA Lewis Research Center (3 & repro)
21000 Brookpark Road
Cleveland, Ohio 44135
Attention: Morton H. Krasner MS 49-2

NASA Lewis Research Center (1)
21000 Brookpark Road
Cleveland, Ohio 44135
Attention: Technical Utilization Office MS 3-16

NASA Lewis Research Center (2)
21000 Brookpark Road
Cleveland, Ohio 44135
Attention: Library

U. S. Atomic Energy Commission (3)
Technical Reports Library
Washington, D. C.

Space Nuclear Prop. Office (2)
U. S. Atomic Energy Commission
Washington, D. C. 20545

Westinghouse Electric Corp. (1)
Astronuclear Laboratory
P. O. Box 10864
Pittsburgh 36, Pennsylvania

North American Aviation, Inc. (1)
Rocketdyne Division
6633 Canoga Avenue
Canoga Park, California

North American Aviation, Inc. (1)
Atomics International Division
8900 Desota Avenue
Canoga Park, California

General Atomic Div. (1)
General Dymanics Corp.
P. O. Box 1111
San Diego, California 92112
Attention: Chief, Tech. Inf. Services

NASA Lewis Research Center (1)
21000 Brookpark Road
Cleveland, Ohio 44135
Attention: Thomas J. Flanagan MS 54-1
Contracting Officer

NASA Scientific and Technical Information Facility (6 and repro)
P. O. Box 5700
Bethesda, Maryland
Attention: NASA Representative

NASA Lewis Research Center (1)
21000 Brookpark Road
Cleveland, Ohio 44135
Attention: Report Control Office

U. S. Atomic Energy Commission (3)
Technical Information Service Extension
P. O. Box 62
Oak Ridge, Tennessee

NASA Lewis Research Center
21000 Brookpark Road
Cleveland, Ohio 44135
Attention:
Nuclear Rocket Technology Office MS 54-1
Mr. Leroy V. Humble MS 49-2 (1)
Mr. Samuel J. Kaufman MS 49-2 (1)
Mr. Edward Lantz MS 49-2 (1)
Mr. Harry W. Davison MS 49-2 (1)
Mr. Richard L. Puthoff MS 49-2 (1)
Mr. Herbert J. Heopler MS 54-1 (1)
Dr. John C. Liwosz MS 54-1 (1)

American Machine & Foundry Co. (1)
Government Products Group
Greenwich/Stamford Complex
737 Canal Street
Stamford, Connecticut

NASA Lewis Research Center (1)
21000 Brookpark Road
Cleveland, Ohio 44135
Attn: Office of Reliability and Quality Assurance

NASA Ames Research Center (1)
Moffett Field, California 94035
Attn: Library

NASA Flight Research Center (1)
P. O. Box 273
Edwards, California 93523
Attn: Library

NASA Goddard Space Flight Center (1)
Greenbelt, Maryland 20771
Attn: Library

Jet Propulsion Laboratory (1)
4800 Oak Grove Drive
Pasadena, California 91103
Attn: Library

NASA Langley Research Center (1)
Langley Station
Hampton, Virginia 23365
Attn: Library

NASA Manned Spacecraft Center (1)
Houston, Texas 77001
Attn: Library

NASA Marshall Space Flight Center (1)
Huntsville, Alabama 35812
Attn: Library

NASA Western Operations (1)
150 Pico Boulevard
Santa Monica, California 90406
Attn: Library