Martin-CR-66-18 (Vol II) Copy No. 47

CONTRACT NAS10-2693

Study of Contamination Sensors

Volume II:
Final Technical Report

APRIL 1966

GPO PRICE $ _____

CFSTI PRICE(S) $ _____

Hard copy (HC) $1.00

Microfiche (MF) 2.00

ff 653 July 65

prepared for

NATIONAL AERONAUTICS AND SPACE ADMINISTRATION
JOHN F. KENNEDY SPACE CENTER
KENNEDY SPACE CENTER, FLORIDA

prepared by

MARTIN COMPANY | MARTIN MARIETTA
DENVER DIVISION

N66 37943

FACILITY FORM 602

(ACCESSION NUMBER) 373	(THRU) 1
(PAGES)	(CODE) 14
CR-78438 (NASA CR OR TMX OR AD NUMBER)	(CATEGORY)

Martin-CR-66-18 (Vol II)

Contract NAS10-2693

STUDY OF CONTAMINATION SENSORS

VOLUME II: FINAL TECHNICAL REPORT

April 1966

Authors

H. V. Anthony
J. G. Drew
E. F. LaRue
J. P. McDonald

Approved

M. Piccone

M. Piccone
Program Manager

MARTIN-MARIETTA CORPORATION
MARTIN COMPANY
Denver Division
Denver, Colorado

FOREWORD

The Martin Company submits this final report of the contamination sensors study, as required by paragraph III.B.4, Contract NAS10-2693. This report is submitted in two volumes:

Volume I - Executive Summary Report;

Volume II - Final Technical Report.

CONTENTS

		Page
Foreword		ii
Contents		iii
Summary		ix and x
I.	Introduction	I-1 thru I-3
II.	Results of Survey Activity	II-1
	A. Survey of Launch, Static Test, and Aerospace Companies Facilities	II-1
	B. Survey of Manufacturers of Instrumentation and Sampling Equipment	II-62 thru II-66
III.	Summary of Determination of Applicable Contamination Control Criteria	III-1
	A. Purity/Impurity Criteria	III-1
	B. Particle Criteria	III-1 thru III-3
IV.	Sampling and Monitoring Point Locations	IV-1
	A. Philosophy for Establishing Sampling and Monitoring Points	IV-1
	B. Locations of Sampling Points	IV-4 thru IV-27
V.	Design Criteria and Specific Equipment Recommendations	V-1

A. Sampling V-1

B. Monitoring . . . . . V-57 thru V-197

VI. Recommendations and Conclusions VI-1

A. Sampling VI-1

B. Monitoring . . . . . VI-2 and VI-3

VII. Recommendations for Further Studies . . . . . VII-1 thru VII-3

VIII. Bibliograph and References VIII-1

A. Annotated Bibliography VIII-1

B. References . . . . . VIII-41 and VIII-42

Appendix -- In-Line Filter Holder and Counter . . . . . A-1 thru A-9

Figure

II-1 Sampling Equipment and Methods II-5

IV-1 Lox System, LC 34 . . . . . IV-5

IV-2 Lox System, LC 37 . . . . . IV-7

IV-3 Lox Transfer System, LC 39 . . . . . IV-8

IV-4 RP-1 System, LC 34 . . . . . IV-10

IV-5 RP-1 System, LC 37 . . . . . IV-11

IV-6 RP-1 System, LC 39 . . . . . IV-12

IV-7 MMH/UDMH-N_2H_4 System, LC 34, 37, and 39 . . . . IV-13

IV-8 N_2O_4 System, LC 34, 37, and 39 . . . . . IV-15

IV-9	GH_2 System, LC 34 and LC 37	IV-16
IV-10	GH_2 System, LC 39	IV-17
IV-11	LH_2 System, LC 34 and LC 37	IV-19
IV-12	LH_2 Transfer System, LC 39	IV-20
IV-13	GN_2 System, LC 34 and LC 37	IV-22
IV-14	N_2 Gas System, LC 39	IV-23
IV-15	Helium Gas System, LC 34 and LC 37	IV-25
IV-16	Helium Gas System, LC 39	IV-26
V-1	Cosmodyne Cryogenic Sampler, Model CS-5.0 . . .	V-9
V-2	Cosmodyne Cryogenic Sampler, Model CS-5.0, In Use	V-9
V-3	Cryogenic Sampler Schematic	V-16
V-4	Wyle Dynamic Fluid Sampler, End View	V-16
V-5	Wyle Dynamic Fluid Sampler, Partially Disassembled	V-17
V-6	Wyle Dynamic Fluid Samplers	V-17
V-7	Wyle Dynamic Fluid Sampler, Exploded View . . .	V-17
V-8	Wyle Dynamic Fluid Sampler, Partially Exploded View	V-18
V-9	Automatic Inline Sampling, Wyle Dynamic Fluid Sampler	V-19
V-10	Gas System Blowdown, Wyle Dynamic Fluid Sampler	V-20
V-11	Manual Inline Sampling, Wyle Dynamic Fluid Sampler	V-21
V-12	RP-1 Fill System, Wyle Dynamic Fluid Sampler .	V-22

V-13 Liquid Hydrogen Fill, Topping and Drain - S-II Storage, Wyle Dynamic Fluid Sampler . . . V-23

V-14 Schematic Diagram of HIAC Automatic Particle Counter V-58

V-15 Schematic Diagram of the Optical Sensor Portion of the Royco Nephelometer Liquidborne Particle Monitor V-58

V-16 Schematic Diagram of the Micro-Scan V-59

V-17 Sensing Zone of the Sperry Liquid Contaminant Level Indicator V-59

V-18 Viscous Flow in Tubes V-89

V-19 Infrared Absorption Characteristics V-114

V-20 Infrared Absorption Spectrum of Shell 640 Jet Fuel V-116

V-21 Electronic Information Received from Instrument Manufacturers V-173

V-22 Data and Control Flow Diagram, Lox Transfer System, LC 39 . . . . . V-177

V-23 Data and Control Flow Diagram, RP-1 System, LC 39 . . . . . V-178

V-24 Data and Control Flow Diagram, GH_2 System, LC 39 . . . . . V-179

V-25 Data and Control Flow Diagram, LH_2 Transfer System, LC 39 . . . . . V-180

V-26 Data and Control Flow Diagram, GN_2 Gas System, LC 39 . . . . . V-181

V-27 Data and Control Flow Diagram, Helium System, LC 39 . . . . . V-182

V-28 Summary of Proposed Instruments for Complex 39 . . . . . V-183

V-29	Data and Control Flow Diagram, Lox Transfer System, LC 34	V-185
V-30	Data and Control Flow Diagram, Lox System, LC 37	V-186
V-31	Data and Control Flow Diagram, RP-1 Transfer System, LC 34	V-187
V-32	Data and Control Flow Diagram, RP-1 Transfer System, LC 37	V-188
V-33	Data and Control Flow Diagram, GH_2 System, LC 34 and 37	V-189
V-34	Data and Control Flow Diagram, LH_2 System, LC 34 and 37	V-190
V-35	Data and Control Flow Diagram, GN_2 System, LC 34 and 37	V-191
V-36	Data and Control Flow Diagram, Helium, LC 34 and 37	V-192
V-37	Summary of Proposed Instrumentation for Complexes 34 and 37	V-196
V-38	Contamination Instrumentation Data System for Complex 39	V-194
A-1	High-Pressure ILFHC Positioned above Microscope Fixture	A-2
A-2	High-Pressure ILFHC Chamber	A-4
A-3	Pictorial View of Microscope Fixture for High-Pressure ILFHC	A-6
A-4	ILFHC Cryogenic Refrigeration Dewar	A-8
A-5	ILFHC in Use with Attached Microscope	A-9

Table

III-1	Fluid Purity Criteria	III-2

III-2 Particle and TFS Criteria for Saturn IB and Saturn V III-3

V-1 Particle Count Comparisons for Particles > 100 μ in Size (Ref 7) V-64

V-2 Particle Count Comparisons, HIAC, Royco and Microscope (Ref 9) V-67

V-3 Particle Count Comparisons for Particles > 51 μ in Size (Ref 10) V-67

V-4 Proposed Measurement Methods V-105

V-5 Gas Chromatographic Techniques V-107

SUMMARY

The primary objectives of the contamination sensors study are to determine the optimum equipment and procedures for sampling the operational fluids at Launch Complexes 34, 37, and 39 at Kennedy Space Center (KSC) and to make specific recommendations for automatic, remotely indicating, contamination-sensing, monitoring, counting, and recording equipment for these fluids. Intermediate objectives, needed to accomplish the primary objectives, are to determine the requirements for fluid sampling and contamination monitoring at the KSC launch facilities, to document and evaluate manufactured equipment capabilities, and to investigate new methods and applications of such equipment.

The study consisted of two primary phases. The first, requiring approximately 60% of the effort, was devoted to sensing and monitoring equipment; the second was devoted to sampling procedures and techniques. The design factors of importance for the sensing and monitoring equipment included size, weight, cost, portability, accuracy, reliability, repeatability, sensitivity, and general practicality. Of secondary importance was automation, a factor which was of interest, but not at the sacrifice of other important factors. The requirements for sampling procedures and techniques included applicability, practicality, repeatability, reliability, simplicity, speed, and general representative nature.

In both phases of the study, launch facility requirements for vehicle loading propellant systems and for exotic life support systems were defined. Data and information on fluid requirements and sampling and analytical equipment and techniques were obtained from NASA centers and from industrial manufacturers. In addition, available equipment and techniques were evaluated for potential applications and suitability for the program, as well as the possibility of modifying them to suit specific needs. Finally, new methods, equipment, and untried applications were considered for those cases in which existing equipment could not perform the desired function.

A significant portion of the study involved personal visits by Martin personnel to 21 static test facilities and launch complexes to determine the most advanced fluid sampling techniques, procedures, and equipment that are providing the best results, and to six plants of contractors who operate such facilities. In addition, approximately 35 instrument manufacturers were visited to obtain information concerning the availability of suitable monitoring instrumentation.

Parameters of interest for the fluids include purity, particles, and specific impurities defined by the pertinent NASA or military specification.

Sampling for purity in the cryogenic fluids, from the sample stream only, is best accomplished by the shielded-cup, totally vaporizing cryogenic sampler. Sampling for purity in fluids that are liquid at or near room temperature is best accomplished by the use of double-valved cylindrical pressure containers, except for RP-1. RP-1 purity sampling is best accomplished in glass or plastic bottles. Sampling of gases for purity is best accomplished in high-pressure cylindrical containers. Sampling of gases for moisture is best performed with the electrolysis moisture indicator. The above techniques are in use at most of the facilities surveyed. Current sampling practice for particle content and for frozen impurities in cryogens is not satisfactory. A system for improving this type of sampling involves the use of a Wyle dynamic fluid sampler or a Maledco turbulent flow sampling valve in conjunction with an inline device for capturing particles and permitting them to be counted in place.

Confirmation of the application of automatic particle counting devices to the fluids of interest in this study is lacking. Also, existing specifications do not define particle limits in terms of parameters measured by these devices. To permit use of these devices, therefore, the criteria must be changed unless, in the specific fluids of interest that contain the types and sizes of particles to be encountered operationally, a correlation can be shown between particle content detected microscopically and that detected by the automatic counting devices.

While a totally continuous contamination monitoring system is impossible to obtain at this time, there is a good system of instrumentation consistent with the state of the art, both present and future, that is capable of providing as near a continuous system as possible. Some instruments of this system are readily available off-the-shelf-items, while others will require some development.

I. INTRODUCTION

Many components used in rocket propulsion systems are subject to malfunction or subnormal performance if excessive contamination exists within the system or if the purity of the fluid is below a certain value. Because of the high reliability required in the functioning of these components, contamination control plays a very important part in the successful performance of rocket-propelled boosters as well as spacecraft.

Although many problems involving contamination control in rocket system fluids have been well defined, investigated, and, to some extent, solved, no fully automated monitoring device can detect all of the various forms of contamination that can exist in such fluids. The purpose of this study program is to provide the required information for the evaluation and possible development of an automatic contamination sensor and monitor capable of being installed in a fluid distribution system and of remotely indicating particle-contamination count, amount of moisture present, purity of the fluid, or some combination of these. The study is also intended to provide the required information for the development of a mechanical sampling procedure and technique and, to some extent, the equipment necessary to perform this sampling.

Specific objectives are to:

1) Establish design criteria for an automatic remotely-indicating fluid contamination sensor, monitor, counter, and recorder based on the requirements of the facilities at Launch Complexes 34, 37, and 39, Kennedy Space Center (KSC);

2) Provide data and information from launch facilities, other centers, and manufacturers required for the evaluation and development of such equipment;

3) Evaluate existing equipment (without resorting to hardware testing) and make specific recommendations as to the suitability of each and where future development efforts might best be expended;

4) Investigate possible use of other tried and untried development methods for this equipment;

5) Establish design criteria for sampling equipment, procedures, and techniques based on the fluid-sampling requirements at Launch Complexes 34, 37, and 39;

6) Investigate sampling techniques at these facilities and, by surveying NASA prime contractors and other manufacturers, determine the techniques providing the optimum results, compare these techniques with those in use at KSC, and make recommendations for improvement.

This report presents information gathered by Martin Company to support the general and specific objectives of the study.

A certain ambiguity is associated with the terms sampling and monitoring. Since clear and unequivocal statements of what these terms mean and how they differ are basic to the study, the following paragraphs define them as they are used in this report.

Sampling is the withdrawal of a volume of fluid or of some constituent of the fluid (including particles) from the operational fluid stream, and the transportation of this quantity to another location for analysis.

The sampled fluid, or constituent, in one sampled volume is capable of offering direct information of only one quantitative level for each parameter analyzed in the sample; that is, it is in itself incapable of providing direct information of the variation in quantity of any parameter occurring at the sampling point as a function of time.

Monitoring is defined as attaching, to the operational system, by a continuous or intermittent confined fluid-flow path, maintained integral at all times during operational fluid flow, a device capable of measuring and reporting the variation of a significant parameter of the operational fluid as a function of time.

The interval separating the time when the reported condition occurs, at the monitoring point in the system, and its quantitative display by the monitoring device shall not influence the definition of a monitoring device.

The continuity of the determination of any parameter throughout operational fluid flow shall not influence the definition of a monitoring device providing that at least two quantity-vs-time information points are detected by the device for the parameter being monitored, during any one occurrence of operational fluid flow.

With these definitions in mind, the essential difference between monitoring and sampling is that the monitoring device adds the dimension of time to the sampling operation. The continuous

or intermittent quantification of the parameters that are equally detectable by sampling have increased value for diagnosis and decision-making only insofar as time -- the additional dimension -- makes their relation to the operational condition of the fluid more significant.

The terms purity, impurity, assay, and particulate contamination also require definition. Purity refers to the concentration of the desirable constituent in the fluid, e.g., 99.6% oxygen. Impurity refers to the concentration of undesirable constituents in the fluid, e.g., 0.1% nitrogen in liquid oxygen. Assay refers to the proportion of desirable constituents in a mixture, e.g., 50% hydrazine - 50% UDMH. Particulate contamination refers to particles in the fluid that are solid at normal room temperature.

The fluids of interest in this study are divided into two categories. Category 1 fluids are liquid oxygen (LO_2, lox), liquid hydrogen (LH_2), liquid nitrogen (LN_2), helium, gaseous oxygen (GO_2), gaseous hydrogen (GH_2), and gaseous nitrogen (GN_2). Category 2 fluids are RP-1, Aerozine 50 (A-50), monomethylhydrazine (MMH), and nitrogen tetroxide (N_2O_4).

Chapter II of this report summarizes the information obtained from a survey of launch and static test facilities. Chapter III summarizes the contamination control criteria that apply to the fluids of interest at KSC. Chapter IV presents the philosophy for selection of sampling and monitoring points, schematics of the fluid systems at KSC showing the locations of these points, and some details pertinent to the electrical and electronic requirements.

Chapter V presents the design criteria and specific equipment recommendations for both sampling and monitoring operations, and includes a comprehensive summary of information supplied by equipment manufacturers describing the available equipment.

Recommendations and conclusions resulting from the study are summarized in Chapter VI, and recommendations for future studies are presented in Chapter VII.

Chapter VIII is an annotated bibliography and list of references. The bibliography contains summaries of reports reviewed during the study and information that served as the basis for some of the conclusions and recommendations presented. The list of references is numbered to correspond to specific publications referenced throughout the report.

The Appendix presents the description of a proposed device referred to as the in-line filter holder and counter (ILFHC). With this device it should be possible to determine the particle content in a flowing sample stream by a membrane-filtration technique that minimizes the introduction of particulate matter from sources other than the operational fluid.

II. RESULTS OF SURVEY ACTIVITY

The objectives of the study dictated the necessity of obtaining a vast amount of information concerning the sampling and monitoring procedures and equipment used at the launch and static test facilities where the fluids of concern to this study are utilized. In addition it was necessary to obtain information from manufacturers of sampling and monitoring equipment to determine the applicability of this equipment to the requirements of the study.

To accomplish these tasks, it was deemed necessary that a Survey and Evaluation Team visit the facilities of organizations believed to be able to make a significant contribution to the study.

The first portion of the survey effort was devoted to visiting most of the major launch, static test, and aerospace company facilities throughout the United States. The second portion was devoted to visiting manufacturers of sampling and monitoring equipment. Each phase of the survey will be discussed individually.

A. SURVEY OF LAUNCH, STATIC TEST, AND AEROSPACE COMPANIES FACILITIES

This task began immediately after the start of the program. The program objective to establish the best sampling and monitoring procedures and equipment for the fluids of interest indicated that a survey and detailed evaluation be made of the procedures and equipment for sampling and monitoring that are at present being employed by the organizations who use these fluids.

The desirability of having personal technical discussions with the individuals who are responsible for the sampling operations, and of actually witnessing these operations in process, is obvious from the following considerations:

1) Contamination sampling and monitoring operations are neither well disciplined nor well documented;

2) Large variances usually exist between the written sampling procedures and the actual performed sampling operations;

3) A vast amount of terminology is used throughout the industry, but unfortunately there is no standard definition of terms;

4) The sampling procedures are ambiguous in interpretation of criteria (e.g., does a nonvolatile residue determination include or exclude particle matter?);

5) The operations and equipment have been neglected as far as standardization is concerned;

6) The possibility exists that some organization might be using a unique item of sampling or monitoring equipment that would be of a significant value to the sampling or monitoring operations at Kennedy Space Center but would not be described in their standard procedures.

The general procedure followed for survey of these organizations included a discussion with all personnel responsible for the sampling procedures and operations and for the criteria that the samples are required to meet, and for the analytical methods by which the samples are analyzed.

Among the many items of discussion with these people were sampling procedures, sampling equipment, monitoring devices, origin of their operational fluid criteria, their views on methods to improve sampling, their feelings toward automatic monitoring equipment, and their attitude toward changing particle definition from longest particle dimension to some other parameter.

The intention at the outset of the program was to witness all possible sampling operations and describe them in detail by the use of a special survey form. However, in most cases it was impossible to observe sampling operations because none were scheduled during the period of the visit. Economic and time limits dictated that where sampling operations were not occurring at the time of visit, analysis of the written procedures and equipment, and the questioning of responsible personnel would have to suffice.

A detailed report was written on the sampling activities and philosophies of each organization and submitted to the appropriate personnel in each organization for comments, deletions, additions, or amendments.

The reports were amended in accordance with the comments received, and a condensation of the amended reports is presented in this chapter. In addition to the reports, a chart (Fig. II-1) summarizes the sampling equipment and methods used by each organization visited. The facilities visited in this survey are listed across the top of the chart. A key to the sampling equipment and methods used at each facility for each fluid parameter of interest, and the abbreviations used is included on the chart.

1. Survey at NASA-MSFC

William Riehl, Chief, Chemistry Division, P&VE

John Nunnelley, Chemistry Division

Mr. Franklin, Metallic Materials Section

Victor Neiland, P&VE Engine Systems Branch

Dr. John Gayle, P&VE Chemistry Branch

Mr. Cauthen, SPACO Corporation

Dallas Vickers, Quality

Mr. Barns, P&VE Chemical Division

The Chemistry Division of Propulsion and Vehicle Engineering establishes the Contamination Control Criteria for NASA. Martin's proposal concerning industrywide abandonment of the longest particle dimension in favor of some other criterion (e.g., cross-sectional area or volume) was discussed with this group. This change in particle definition is necessary so the zone-sensing machines can be used to replace the membrane/microscopic count. Mr. Riehl and staff agreed with this proposal and encouraged Martin to present it to the other prime contractors during visits to their facilities in the course of the contract surveys. They thought that if all prime contractors would agree to effect the changeover simultaneously the burden on any one contractor would be lessened. It was agreed, however, that the existent criteria would be the governing criteria for instrumentation recommendations made at the end of this study. Martin was invited to submit the alternative criteria, as a solution to the automated particle-counting problem.

SAMPLING EQUIPMENT AND M

PARAMETERS SAMPLED FOR / TEST SITES	DAC-VAFB	MMC-VAFB	LAC-VAFB	GD/C-VAFB	GE-VAFB	KSC	P&W	A.F. PLANT 74	GD/C-S.D.C.	EAFB-RPL	RD-C.P.C.	RD-S.S.C.	RD-RENO	AGC-SACTO	DAC-R.C.C.	LAC-S.C.
GH_2 PURITY & PARTICLES	O	O	O	O	O	E_1 F H U	O	H_1 E_1 X Y	O	O	N	R	O	O	O	O
RP-1 PURITY	C	O	O	C	O	C_3	O	O	N	C C_1	C_4 L	C_4 L	O	O	O	O
RP-1 PARTICLES	C	O	O	C	O	C_3	O	O	C	C C_1	C_4 L	C_4 L	O	O	O	O
LOX PURITY	A_3	O	O	A	O	A	A D	A	A	A B	A	A	O	A	A	O
LOX PARTICLES	N	O	O	B	O	B C_2	N	U_6	K_1	B	K	K	O	B	B	O
LN_2 PURITY	A_3	O	O	A	O	A	A	A	A	A B	A	A	O	A	A	O
LN_2 PARTICLES	N	O	O	B	O	B	N	U_6	K_1	B	K	K	O	B	B	O
LH_2 PURITY	O	O	O	O	O	A_1	N	A_1	N	N	A_1	A_1	O	N	N	O
LH_2 PARTICLES	O	O	O	O	O	C_3	N	N	K_1	N	N	N	O	N	N	O
GN_2 PURITY	N	D	D	D	N	N	H_1 D	H_1 Z	D	D	D R	D R	N	D	D	D
GN_2 HYDROCARBON	T	D	D	D	N	F	D	X_1	D	D	DR	D R	N	D	T	D
GN_2 PARTICLES	U_3	U_1	U	U	U	U	U_5	N	U_2	U	U	U	U	N	U_1	U
GN_2 MOISTURE	E	D	E	E	E	E E_1	E_3	E_1	E E_2	E	D R	D R	N	D	E_1	E
HELIUM PURITY	D	O	D	D	N	N	D	O	D	D	D R	D R	O	D	D	D
HELIUM HYDROCARBON	D T	O	D	D	N	F	D	O	D	D	D R	D R	O	D	T	D
HELIUM MOISTURE	E	O	E	E	E	E E_1	E_3	O	E E_2	E E_2	D R	D R	O	D	E_1	E
HELIUM PARTICLES	U_3	O	U	U	U	U	N	O	U_2	U	U	U	O	N	U_1	U
GO_2 PURITY	O	O	O	O	O	D	O	H_1	D	D	D R	D R	O	O	O	O
GO_2 HYDROCARBON	O	O	O	O	O	D	O	X_1	D	D	D R	D R	O	O	O	O
GO_2 MOISTURE	O	O	O	O	O	D	O	E_1	E E_2	E	D R	D R	O	O	O	O
GO_2 PARTICLES	O	O	O	O	O	U	O	N	U_2	U	U	U	O	O	O	O
N_2O_4 PURITY	O	D_1	O	O	D	D	O	O	O	D	D J M	D J M	M	P	C_4	O
N_2O_4 PARTICLES	O	D_1	O	O	D	D	O	O	O	D	D J M	D J M	S	P	N	O
A-50 PURITY	O	D_1	D*	O	O	C	O	O	O	D	D J M	D J M	O	C	O	O
A-50 PARTICLES	O	D_1	D*	O	O	C	O	O	O	D	D J M	D J M	O	C	O	O
MMH PURITY	O	O	O	O	D*	C	O	O	O	O	D J M	D J M	M	O	C_4	O
MMH PARTICLES	O	O	O	O	D*	C	O	O	O	O	D J M	D J M	S	O	N	O

ETHODS

LAC-S.C.C.	BOEING-B.O.	BOEING-S.W.	DAC-S.M.C.	NAA-D.C.	JPL-P.C.	LEC-WSTF	GAEC-WSTF	ZIA-WSTF	NAA-WSTF	MSFC	RMD, TCC-DNJ	MMC - DENVER
O	O	O	O	O	O	O	O	O	O	N	O	N
O	O	O	C	O	O	O	O	O	O	C	O	C
O	O	O	C	O	O	O	O	O	O	C	O	C
N	A	A	A A_3	A	O	A G	O	A	A	A B	N	B
N	B	B	B	B	O	B	O	U_3 B	N	N	N	B
N	N	A	A A_3	A	O	A	O	A	A	A B	N	B
N	N	B	B	B	O	B	O	U_3 B	N	N	N	B
N	N	A_1	N	A_1	O	A_2	O	A_2	A_2	A_1 B	N	N
N	N	N	N	B	O	N	O	N	N	N	N	N
N	N	N	D	D_3	D	D D_1	D D_1	D D_1	D_3 D_1 D	N	N	D
N	N	N	T	D_3	D	D D_1	D D_1	D D_1	D_3 D_1 D	N	N	D
U	N	N	N	N	U	U_1	W	U_1	N	U	N	U_1 U_7
E_1	N	N	E E_1	D_3	E	E_2	E_2	E_2	D_3 D_1 D	N	N	E E_2
N	N	N	D	D_3	O	D D_1	D D_1	D D_1	D_3 D_1 D	N	N	D
N	N	N	D	D_3	O	D D_1	D D_1	D D_1	D_3 D_1 D	N	N	D
E_1	N	N	D	D_3	O	E_2	E_2	E_2	D_3 D_1 D	N	N	E E_2
U	N	N	N	N	O	U_1	W	U_1	N	N	N	U_1 U_7
O	O	O	O	D_3	O	O	O	O	O	N	N	O
O	O	O	O	D_3	O	O	O	O	O	N	N	O
O	O	O	O	D_3	O	O	O	O	O	N	N	O
O	O	O	O	N	O	O	O	O	O	N	N	O
D*	O	C_2	C_4	I	D	D_1	D_1	D_1	D_1	O	D	D
D*	O	C_2	N	I	D	D_1	D_1	D_1	D_1	O	D	D
C*	O	C_2	O	I	D*	D_1	D_1	D_1	D_1	O	D	D
C*	O	C_2	O	I	D*	D_1	D_1	D_1	D_1	O	D	D
N	O	O	C	I	O	O	O	O	O	O	D	O
N	O	O	C	I	O	O	O	O	O	O	D	O

Legend:

A	Cosmodyne Cryogenic Sampler
A_1	Cosmodyne, Cryogenic Sampler Modified
A_2	Vacuum-Jacketed Cosmodyne Cryogenic Sa
A_3	Douglas Cryogenic Sampler
B	Dewar
C	Glass Bottle
C_1	Pharmaceutical Graduate (200 ml)
C_2	Erlenmeyer Flask
C_3	Glass Beaker
C_4	Teflon Bottle
D	Double-Ended, Double-Valved Bottle
D_1	Double-Ended, Double-Valved Bottle wit Millipore Filter Holder Attached, (0.4
D_2	Single-Ended, Single-Valved Bottle
D_3	K Bottle
E	CEC Moisture Monitor
E_1	Beckman Electrolytic Hygrometer
E_2	Alnor Dewpointer
E_3	Dewpoint Cup
F	Beckman Hydrocarbon Analyzer
G	Cryenco Liquid-to-Gas Vaporizer Sample
H	Lockwood-McLorie O_2 Analyzer
H_1	Analytic Systems O_2 Analyzer
H_2	Beckman Oxygen Analyzer
I	Cosmodyne Storable Fuels Sampler
J	Polyethylene Bomb Sampler with Millipo
K	Remote Cryogenic Dewar Sampler
K_1	Modified Stanley Bottle
L	Remote RP-1 Sampler
M	NTO or Fuel Panel and Flanged Sampler
N	Not Sampled
O	Not Used
P	AGC N_2O_4 Sample Container
R	Flanged Gas Sampler (3000 psi)
S	Glass Millipore Funnel with OH Membran
T	1/2-in. Stainless Steel Tube Filled wi
U	High-Pressure Millipore Membrane Holde Membrane
U_1	High-Pressure Millipore Membrane Holde Membrane
U_2	High-Pressure Millipore Membrane Holde Membrane
U_3	High-Pressure Millipore Membrane Holde Membrane
U_4	High-Pressure Millipore Membrane Holde Membrane
U_5	Millipore Aerosol Monitor Holder with a

II-5-2

for LH_2 Service

mpler

h High-Pressure
5 μ Membrane).

r

re Holder Attached

e

h Crushed Fire Brick

with a 0.45 μ

with a 0.8 μ

with a 1.2 μ

with a 5.0 μ

with a 10.0 μ

0.8 μ Membrane

U_6	High-Pressure Millipore Membrane Holder with a Gelman Type A Glass Fiber Filter
U_7	Martin-Designed High Pressure Screen-Filter Holder, with a 50-mesh Screen
W	Series of 3 High-Pressure Membrane Holders with 0.8 μ Membranes
X	MSA Infrared Analyzer, Model MG3823
X_1	Liston Becker Infrared Analyzer
Y	Gow-Mac Ortho-Para Meter
Z	Arnold O. Beckman Oxygen Analyzer (for N_2)
*	The commodity that the organization samples is not the true commodity shown. However it is close enough that the sampling procedure used would be applicable to the subject fluid. Example: Lockheed does not use or sample A-50, but they do use and sample UDMH. It is felt that sampling of UDMH is the same as sampling A-50.
DAC-VAFB	Douglas Aircraft Co., Vandenberg Air Force Base
MMC-VAFB	Martin Marietta Corp., Vandenberg Air Force Base
LAC-VAFB	Lockheed Aircraft Corp., Vandenberg Air Force Base
GD/C-VAFB	General Dynamics/Convair, Vandenberg Air Force Base
GE-VAFB	General Electric Corp., Vandenberg Air Force Base
KSC	Kennedy Space Center
P&W	Pratt and Whitney Aircraft, West Palm Beach, Florida
A.F. Plant 74	A. F. Plant #74, Stearns - Rogers Corp., West Palm Beach, Florida
GD/C-S.D.C.	General Dynamics/Convair, San Diego, Calif.
EAFB-RPL	Edwards Air Force Base Rocket Propulsion Laboratory
RD-C.P.C.	Rocketdyne, Canoga Park, California
RD-S.S.C.	Rocketdyne, Santa Susana, California
RD-Reno	Rocketdyne, Reno, Nevada
AGC-Sacto	Aerojet - General Corp., Sacramento, Calif.
DAC-R.C.C.	Douglas Aircraft Corp., Rancho Cordova, Calif.
LAC-S.C.	Lockheed Aircraft Corp., Sunnyvale, Calif.
LAC-S.C.C.	Lockheed Aircraft Corp., Santa Cruz, Calif.
Boeing-B.O.	Boeing Co., Boardman, Oregan
Boeing-S.W.	Boeing Co., Seattle, Washington
DAC-S.M.C.	Douglas Aircraft Corp, Santa Monica, Calif.
NAA-D.C.	North American Aviation, Downey, California
JPL-P.C.	Jet Propulsion Laboratory, Pasadena, Calif.
LEC-WSTF	Lockheed Electronics Co., White Sands Test Facility
GAEC-WSTF	Grumman Aircraft Engineering Corp., White Sands Test Facility
ZIA-WSTF	Zia Company, White Sands Test Facility
NAA-WSTF	North American Aviation, White Sands Test Facility
MSFC	Marshall Space Flight Center
RMD,TCC-D.N.J.	Reaction Motors Div, Thiokol Chemical Corp., Denville, New Jersey
MMC-Denver	Martin-Marietta Corporation, Denver Division, Denver, Colorado

II-6

Fig. II-1 Sampling Equipment and Methods

The Oklahoma State University work done for NASA-MSFC under Mr. Neiland's direction (Contract NAS8-1109) was discussed. This study deals with various filter media investigations and sampling methods for hydraulic systems. The Maledco valve and HIAC counters were tested during the course of the study, and a new method of sampling, involving membrane puncture with a hypodermic needle, was devised. Isokinetic probe sampling and the roller particle size analyzer were also examined.

Dr. Gayle was contacted for a discussion of particle counters. His views, in brief, are:

1) Serious deficiencies were noted in attempts to validate the performance of both liquid and gaseous system Royco particle counters;

2) The HIAC particle counter is an excellent, reliable instrument that gives good statistical correlation with microscopic counts;

3) The statistical counting method given in ARP 598 is incorrect because the particle distribution is a function of radial distance on the membrane;

4) The method of defining particle population in clean room atmospheres (cf. Federal Standard 209 and TO 00-25-203) is incorrect. It should simply state the particle population in each size range. (NASA uses membrane-microscopic counts exclusively for the control of its clean room.)

Mr. Cauthen, Mr. Vickers, and Mr. Barns confirmed the following information:

1) There are no operational fluid sampling manuals or individual documents for this sampling at NASA-MSFC;

2) There is no established frequency or operational-phase-controlled sampling for operational propulsion fluids at NASA-MSFC. There is one for RJ-1, when it is used as a hydraulic fluid;

3) Sampling at time of delivery is generally followed for all fluids;

4) Other sampling is performed only when it is specifically requested by the Chemical Division or the Test Operations people.

Sampling operations for individual fluids were as follows:

1) For LO_2, the method described in the military specification is used. (MSFC-SPEC-399 contains no particle criteria). There is no MSFC document for sampling;

2) For LH_2, both the Cosmodyne 4.4-liter sampler and a dewar are used. There is no written procedure. There is no sampling for particle content. The sampler is not rinsed with $CC\ell_4$ after vaporization of the hydrogen so the hydrocarbons determined are really only the volatile hydrocarbons;

3) No procedure exists for sampling GO_2, GH_2, and LH_2;

4) A written procedure exists for sampling particles in GN_2, which involves flowing a total of 30 cu ft of gas through a Millipore membrane at 6 to 8 cfm;

5) Helium is not sampled;

6) N_2O_4, A-50, and MMH are not used at MSFC;

7) No procedure exists for sampling RJ-1 other than as hydraulic fluid.

2. Survey at Wyle Laboratories, Huntsville Division

Dr. Fred Konigsdorffer

The properties of the Wyle flow sampling wedge and of the Maledco turbulence-producing sampling valve were discussed. Wyle makes no direct contribution with respect to the arsenal sampling procedures.

3. Survey at Army Missile Command, Redstone Arsenal

Herbert Hoop, Engineer

Tad Murray, Chief of Research Branch, Scientific Information Center

This agency could not contribute specific data on sampling procedures at the arsenal. A bibliography of allied studies was reviewed and an IBM 7010 computer readout of the information on Contamination Control in Propellants from the MSFC computer (Problem No. 3-1014) was obtained.

4. Survey at NASA-KSC

a. High Pressure Gaseous Support Section, Complex 39

J. B. Stone

The High Pressure Gaseous Support Section handles GN_2, LN_2, helium, and GH_2 (LH_2 and LO_2 are incidental).

LN_2, used for conversion to GN_2 at LC 34/37 and LC39 is received already tested to all parameters of MSFC-SPEC-234. The Propellant System Component Laboratory Section performs the analysis. An additional sample of the LN_2 is taken prior to what is known as a critical operation any time the vehicle is supplied with fluid, whether for loading-test or launch. This sample is also analyzed to all parameters of MSFC-SPEC-234.

High pressure GN_2 at the converter-compressor facilities is monitored continuously for moisture content by a Beckman or CEC-26-350 instrument, and for hydrocarbons using the Beckman Hydrocarbon Analyzer Model 105A. These samples are taken from a plain side tap from the main line, at 100 cc per min for moisture and 10 to 16 cc per min for hydrocarbons. No automatic particle monitoring is performed or planned. No isokinetic sampling devices exist for the manual particle sampling that is performed. Particle samples are taken from an ordinary side tap by means of the high-pressure Millipore membrane holder. The gas is analyzed to the requirements of MSFC-SPEC-234.

Mr. Stone believes that O_2 content in GN_2 should be monitored at all points where it is monitored for hydrocarbons and moisture and that automatic particle monitoring could well be used, but he stressed the importance of microscopic backup for qualitative purposes.

The GN_2 is piped from the convertor-compressor facilities to the three launch pads at LC 39 and to two launch pads at LC 34/37 by cross-country pipe line. It is filtered enroute. At the launch pads, it is monitored just after it leaves the storage bank manifolds for hydrocarbons and moisture by equipment identical to that at the converter-compressor facility. Additionally, purity samples and

particle samples are taken at the launch pads, in conjunction with the sampling operations at the converter-compressor facilities. The operational pressure of this system is 4500 to 6000 psig with a minimum of 4700 psig permitted during launch operations.

- The low pressure GN_2 used for environmental control (150 psig at Complex 39, 50 psig at Complexes 34 and 37) is produced, without gaseous compression, by direct vaporization of the pumped LN_2. No contamination samples of any sort are taken from it.

  At LC 34/37, helium is delivered as a gas in 40,000-scf tube trailers, previously certified to MSFC-SPEC-364A. It is compressed to 6,000 psi and is purified by an LN_2 cold trap. Equipment identical to that used on the GN_2 system monitors hydrocarbon, moisture, and purity immediately following the cold trap. Periodic purity and particle samples are taken from this point also, and at the outlet of the storage bank manifolds at the pads prior to critical loading and launch operations. Automatic purity monitoring equipment is being installed for this system. The helium systems at LC 39 will be essentially the same as those at LC 34/37 except that the helium will be delivered to the converter-compressor facility in 200,000-scf rail cars instead of in semitrailers. Neither cold trap nor purity monitoring equipment is planned for installation. Mr. Stone believes, however, that this equipment is required.

b. Propellant Systems Component Laboratory

<u>Charles W. Hoppesch</u>

This laboratory intends to use the Lockwood-McClorie Analyzer for O_2 in all gases, and proposes to use it on-line in the field. This instrument, using a fritted silver electrode in a 25-percent KOH solution as the detector, bubbles the gas through the electrolyte.

A Microtek Gas Chromatograph has been successfully used for the past nine months to detect neon, O_2, N_2 and CH_4 in helium.

Particle sampling for all gases is performed with the standard high-pressure Millipore membrane holder equipped with a 0.45-micron membrane. The total sample taken is 30 cu ft. The flow rate is 6 cfm, set by regulators prior to holder hookup. Isokinetic flow-sampling devices are not used, but it is planned to use them to obtain representative samples of frozen impurities in cryogenic fluids but not for particles existing at ambient temperatures. Mr. Hoppesch has no opinion relative to abandoning the longest-particle dimension as the critical particle-definition parameter.

Helium and nitrogen are sampled by means of a 3-liter bottle valved at both ends. Instead of flex line, 1/8-in. stainless tubing is used for hookup. The procedure is as follows:

1) Evacuate bottle and repressurize with the sample gas three to four times;

2) Purge bottle with sample gas 5 min;

3) Take sample;

4) Analyze sample in accordance with the applicable MSFC specification.

For sampling LO_2 and LH_2, the Cosmodyne cryogenic sampler is used with its expansion chamber prepurged with the sample gas. If the sample passes the organic requirements, this unit is reused without cleaning. There is no automatic monitoring of LO_2, and it will be analyzed in accordance with the MSFC specification.

A-50, N_2O_4, MMH, and RP-1 are supplied by the Air Force and are certified by the Air Force Laboratory or Pan American.

c. Launcher Environmental Section

L. E. Hill

There are eight swing arms with 6 to 80 lines per swing arm. Cleanliness of all lines is checked by means of a purge with helium or GN_2, and the purge gas is sampled

for hydrocarbons, moisture and particles, as applicable, at the end plate of the swing arms (immediately upstream of the flex lines to the vehicle). The purge gas is not sampled to the criteria of the normal operational system fluid except for the GN_2 and helium systems where the purge fluid is the system fluid.

d. Converter-Compressor Facility, Complexes 34 and 37

William Hunteman (Bendix Corporation, Pneumatic Networks Group)

Charles Garman (Bendix Corporation, Pneumatic Networks Group)

GO_2, GN_2, helium, and GH_2 are supplied from this facility. GO_2 is not sampled at present. GN_2 and helium are monitored continuously by Beckman electrolytic hygrometers and Model 108 and 108A hydrocarbon analyzers. These instruments are plumbed to the sample stream and to the air, hydrogen, zero, and span calibration bases by means of long lengths of 1/8-in. stainless tubing with AN fittings. They are panel-mounted in an air-conditioned room. The instruments shift calibration but maintain linearity with changes in the temperature of the portion of the tubing in areas that are not temperature controlled. Particle and purity samples are taken from the same sampling-point location that supplies the monitors. Samples for hydrocarbon and moisture determinations are taken frequently as a check on the monitoring instruments.

A new system involving an LN_2 cold trap for the helium is being installed. It is expected that monitoring apparatus will be installed for H_2, O_2, and N_2 in helium.

Cross-country lines distribute the helium and GN_2 to Complexes 34 and 37 where on-line hydrocarbon and moisture monitors, identical to those at the converter-compressor facility, are installed at the storage bank manifold outlets. Purity and particle samples are also taken at the latter points in conjunction with sampling at the converter-compressor facility.

GH_2 will be produced by the portable converter at the complex and fed into the storage banks there. It will be analyzed in a monitor trailer for hydrocarbon content, O_2, N_2, and moisture. Samples will be drawn from the storage bank through lines approximately 85 ft long. Samples will be taken from the same location by the Propellant Systems Component Laboratory. The maximum time that the storage bottles will contain GH_2 is one week at any one given period. Monitoring will be done periodically during this period.

There has been no requirement for analysis of the environmental control system GN_2.

e. Operations Engineering Branch (MSOB)

J. D. Beeson, M and P Division, Propulsion Branch

There is no automatic monitoring in the spacecraft propulsion systems (GSE). MMH, N_2O_4, A-50, GN_2, helium, and LN_2 are supplied to the spacecraft. Analysis of N_2O_4, A-50, and MMH requires 5 hr, of the gases, 1 hr.

Fluids are analyzed for the cleanliness requirements of MSFC Drawing 10M01671 - Level 4 for liquids, and Level 1 for gases, and to MIL-P-27402, MIL-P-26539A, and MIL-P-27404 for A-50, N_2O_4, and MMH respectively, MIL-P-27401B for LN_2 and GN_2, and Bureau of Mines Grade A for helium. (For the helium system, Level 1 of 10M01671 applies only from the valve boxes to the spacecraft and Level 4 applies upstream).

A-50 is sampled in glass bottles by Pan American and analyzed by the Air Force Laboratory. North American Aviation provides the system valving for sampling. There are no isokinetic probes, only simple side taps. Sampling is performed just before launch and upstream of the final system filter.

N_2O_4 is sampled in a double-valved one-liter Hoke bottle under a slight pressure of GN_2 (less than 25 psig). There is no separate written sampling procedure, but instructions

exist in the test procedures and the operating procedures. The system is conditioned to 70°F before sampling. Fill pressure for sampling is 20 to 375 psig. Sampling points and times are the same as for A-50.

MMH is sampled in a manner identical to that for A-50. It is used in the service module propulsion system (SPS) and in the reaction control system (RCS).

LN_2 is sampled in the 500-psi Cosmodyne samplers. It is used only in the gaseous helium service unit S009 where it cools the helium flowing into the spacecraft from -150 to -180°F. The total requirement is 75 gal. There is no interest in the particle content. It is sampled for conformance to the military specification before being loaded into the S009 unit.

GN_2 is sampled for purity by means of either the 150-psi watermelon or a 3000-psi small K bottle depending on system pressure. Particle samples are taken from the FDS distribution boxes on the launch umbilical tower using the Millipore high-pressure membrane holder equipped with the HA black 0.45-micron membrane, connected under positive pressure purge. Sampling time is usually one minute at 50 psig and both a regulator and a throttling valve are located upstream of the holder. No needle valves are used for this operation because they generate particles. Ball valves or other similar valves are used. There are two 5-micron nominal, 15-micron absolute filters between the sampling point and the spacecraft.

Helium is sampled in a manner identical to that for GN_2. System pressures range from 4150 to 6000 psi. Temperatures range from -180°F to ambient.

f. Fuel Section

R. E. Rhodes, Propellants Branch

This section handles LH_2 and RP-1. GH_2 is the responsibility of the converter-compressor facility. Other propellants are handled by the vehicle people. Boeing is responsible for propellants at Complex 39 for Saturn V, and Chrysler is responsible for propellants at Complexes 34 and 37 for Saturn IB.

RP-1 is analyzed in accordance with the military specification and at one time was sampled from the storage tank, both bottom and top. A sample is taken for particles as late in the checkout phase as possible prior to onboard loading to determine the filtering that is then required. No isokinetic probes are used, only a bottom on-line tap. The sample is taken in 100- to 500-ml open pyrex beakers and covered with aluminum foil. An additional sample is taken at the downstream end of the transfer system at the end of the hard line to determine that the line is clean. A sample is also taken at the top of the mast to check RP-1 fluid as requested by MSFC. RP-1 is sampled at each loading operation. The RP-1 system is under constant GN_2 purge when not in use. No sampling is performed during the filtering/dewatering recirculation operation. There used to be a water buildup in the RP-1 before the storage tanks were blanketed with GN_2. The RP-1 is passed through the filtering/dewatering unit during storage tank fill; maximum allowable particle size is 175 microns. Previous programs have used such automatic density determination devices as the diaphragm pickup and manometer methods to measure pressure change. These will not be used any more because onboard temperature sensors will be programed into a computer to determine the density. No other on-line automatic monitoring devices have been used or are contemplated for use.

LH_2 is sampled from the bottom of the storage tank by means of Cosmodyne samplers and is analyzed for purity, CO_2, hydrocarbons, moisture, N_2, and O_2. The ortho/para balance is not measured.

LH_2 is sampled before loading test or launch after the final replenish of the storage vessel. No incremental sampling is done. Recently all trailers have been sampled before their contents were transferred into the storage tank. This was not done in the past.

NASA is trying to develop a technique for sampling particles in LH_2. At present an open pyrex beaker is being used for sampling. There are no samples taken from the transfer system, either static or dynamic.

g. Complex 37 LO_2 Area

Tom George, (Chrysler Corporation)

LO_2 is analyzed to MIL-P-25508D with KSC modification listed in PR 2400. Samples are taken from the tankers at delivery and from the storage tank. No samples are taken from the transfer lines. Purity samples are taken in Cosmodyne samplers. Samples for particulate contamination are taken in dewars or in ordinary laboratory flasks. Maximum allowable particle size is 175 microns.

h. North American Aviation

John Ostroski, Quality Engineering Group of Quality Assurance, NAA S&ID (Downey)

Pan American or Bendix samples at NAA request. Fluid system sampling is done in accordance with a combination of process specifications and quality control specifications (MQ series). The MQ specifications are used as guides to sampling operations but are often overridden by directions given in the process specification governing the checkout of the equipment concerned.

Nearly all of the chemical analysis criteria are based on military specifications, Federal standards, and manufacturer's specifications. In a few cases NAA material specifications are referenced.

To date all sampling, both environmental and system type, has been performed manually.

All fluids are sampled immediately before entry into the spacecraft. Isokinetic sampling devices are not used or planned.

i. Work Area No. 7

C. B. Tigard, Bendix Field Engineering Corporation

This organization will perform the following services:

1) Store and test all ordnance for MILA;

2) Supply SCAPE suits;

3) Train propellant handlers;

4) Deliver all propellants and pressurants to MILA and to Complexes 34 and 37.

They will sample all fluids prior to delivery. They will probably perform system sampling as well.

Bendix will have its own fleet of cryogenic transports in addition to those of the vendors. All transports will be sampled to all parameters of the MSFC specifications before delivery. K bottles and drums will be randomly sampled on a lot basis. No automatic monitoring devices are planned.

Equipment to be used includes the Cosmodyne sampler, Millipore high-pressure membrane holder using black 2- to 5-micron membranes. The Propellant Systems Component Laboratory Section of NASA-KSC will perform the analysis.

5. Survey at Air Force Chemical Laboratory, Cape Branch

H. G. Kelley, Laboratory Supervisor

Lt. Hopper, Chemist

The laboratory performs the Millipore particle counts on final rinses (usually petroleum ether or Freon TF) supplied by the Pan American cleaning facilities and additionally performs some final rinses in addition to propellant analysis. Equipment noted includes a Beckman IR-5, DK-1A, IR-4, IR-8, and electrolytic hygrometers. The IR-4 has a 10-meter gas cell that is used at one atmosphere after one sample fill/evacuation/fill sequence. Also in use were a Dynatonic Chrom Analyzer 100, Analytic Systems O_2 Analyzer, Gow Mac Model SC5005 Helium Analyzer, Supersensitive Deoxo Indicator (manufactured by the Engelhard Industrial Equipment Division, Newark, N. J.), Aerograph Hy Fi Model 600B with Sargent Recorder Model SR, and a Perkin-Elmer Vapor Fractometer Model 154.

6. Survey at Chrysler Space Division, Florida Operations

Dave Norton, Pneumatics Unit

James Romine, Pneumatics Unit

Mr. Norton is in charge of the group and of a subgroup called the Contamination Control of Pneumatic Systems and Product Improvement Section. This organization is at present concentrating on better field maintenance procedures and better filtration techniques since they feel that automatic particle counters are not sufficiently developed to control fluid systems.

Mr. Romine worked with Dr. Gayle at Huntsville for a number of years on the evaluation of commercially-available particle counters. The areas of interest of this group are primarily GN_2, helium, GH_2, and GO_2 for the S-IB.

Mr. Romine expressed the opinion that automatic particle counting does not have to give information on all three dimensions provided sufficient statistical data are available. He believes that one or two counters are currently available that can replace microscope methods for liquids, but knows of no particle counters that will give three-dimensional readings or, indeed, any absolute dimension of the particle. Mr. Romine stressed the importance of the qualitative information given by the microscopic technique that is unavailable through the automatic counters. He thought that particle counters would have some merit as long as they were not the sole method for determination of particulate contamination, i.e., they should be backed up with fluid sampling and microscopic observation.

Mr. Romine and Mr. Norton questioned the need for isokinetic probe or wedge methods for sampling in turbulent streams, and were of the opinion that a simple side tap would give representative samples of particle contamination in any volume-of-flow system as long as the flow is turbulent. The work performed at Oklahoma State University was referenced in support of this view, although this study involved hydraulic systems only.

They believe that, where laminar flow is encountered, full-fluid stream sampling should be used in preference to isokinetic probe or wedge sampling since the particle spectrum is not uniform across the plane perpendicular to the axis of flow under these conditions.

The high-pressure membrane holder equipped with a black 0.45-micron membrane, is used by Chrysler for sampling particulate contamination in gases. They believe that gas systems should be sampled for particles while the gas is flowing at the maximum mass flow rate but stated that this was not often possible with present sampling equipment.

7. Survey at Douglas Aircraft Company, Cape Kennedy, Florida

Donald Richie, Supervisor, Materials Research and Process Methods Department

Andrew Hirko, Materials Research and Process Methods Department

Henry Williams, Materials Research and Process Methods Department

Fluids used at this facility are LO_2, LH_2, helium, GN_2, MMH, and N_2O_4.

NASA samples, analyzes, approves, stores, and supplies the LO_2, LH_2, helium, and GN_2 to the Douglas interface.

NASA provides and Bendix samples the MMH and N_2O_4 used in the auxiliary propulsion system. Douglas has no control over these fluids.

Douglas samples only the helium at a point downstream of the Douglas interface for purity and moisture.

The purity requirement for helium at this point (at the console) is 99.95%. Douglas takes this sample, and it is analyzed in their purity laboratory by mass spectrograph. The sampling device is a walk-around aviator's breathing oxygen bottle.

Between launches, all umbilical lines from the Douglas interface are blown down, and a particle count taken. For this purpose the standard Millipore high-pressure membrane holder equipped with the white, gridded, 0.45-micron membrane is plumbed to the umbilical discharge point through a pressure regulator controlling to 100 psi. No restricting orifice is used. A flow meter is used to establish sampling flow rate. All equipment is cleaned to the requirements of MSFC-SPEC-164, except three consoles that are

cleaned to 10M01671 (or KSC-C-123). Douglas Process Specification (DPS) 43200 requires that gases delivered to an aerospace vehicle component or assembly contain no particles larger than 100 microns. MSFC-SPEC-164, however, allows particles up to 2500 microns to remain in the equipment.

DPS 43000 gives the requirements for the LO_2 systems, DPS 40101 for liquefied gas systems, DPS 43120 for LH_2 and MMH, and DPS 44101 for other parameters. The moisture in helium is determined with a CEC moisture monitor plumbed directly to the system. The laboratory also has a Perkin-Elmer 154 gas chromatograph to analyze the helium from purged systems. This is required in the preparation of the LO_2 and LH_2 tanks for fill to verify that they contain not less than 99.95% helium. Oxygen, nitrogen, and argon are specifically detected quantitatively. There is no filterable solids mass limit, or particle size and count limit imposed on any operational fluid other than the gases (DPS 43200) except for those required by the military specifications. The military specifications are used as the control criteria for all fluids except helium, which is controlled to the Bureau of Mines Grade A definition.

In addition to the Cape Kennedy organizations already listed, the following organizations were visited by the Martin Survey and Evaluation Team:

1) NASA-KSC; Boeing Missiles and Space Company, Complex 39, VAB, Charles W. Inderwiesen, William C. Blasky;

2) Chrysler Corporation, Cape Kennedy, Gary T. Hicks, Senior Quality Engineer;

3) General Dynamics Astronautics, Cape Kennedy Operations, Robert Goldinger, Quality Division.

These people were unable to contribute any further information as to the criteria processes and procedures used at the test and launch facilities at Cape Kennedy or Merritt Island.

8. Survey at Air Force Chemical Laboratory, Patrick AFB

Lt. Col. Stowers

Major Barneyback

These gentlemen expressed a firm desire to see as many of the fluid contamination detection parameters automatically instrumented as possible but also expressed very grave doubts as to the practicality of such an effort.

Major Barneyback said that one of the greatest problems will be to maintain calibration of the instruments in their field environment because of their dependence for accuracy on closely controlled temperature and humidity, and on freedom from shock and vibration. In addition there exists the equally serious problem of these effects on the calibration gases, which would be a necessary adjunct to these instruments. He stated that even under the best of laboratory conditions, these gas mixtures tend to stratify and separate in low concentrations so a series of calibrations must be performed from various sources of calibration standards and a statistical true value determined. He cannot conceive of these delicate processes being readily or practically adaptable to true field conditions unless far more liberal allowables are assumed than are permitted by vehicle and spacecraft criteria at present. As to on-stream particle counting devices, he believes that the engine manufacturers ultimately dictate the requirements, and that the practice, whereby each upstream organizational area of responsibility defines more stringent criteria than are required by the next user, makes the accomplishment of any major change in the particle definition within a reasonable time period extremely difficult. Without this change from the longest particle dimension as the governing criterion, the prospects look dim for the use of any of the zone-sensing devices in the operational control of these fluids.

9. Survey at Pratt and Whitney Aircraft, West Palm Beach, Florida

R. E. Mayer, Project Engineer, RL-10 Engine

Jack Guthrie, Area Supervisor, Rocket Test

Lloyd D. Flood, Supervisor, Materials Testing

The control of contaminants in propellants used in the RL-10 engine is aimed more at thrust degradation control than toward any susceptibility to malfunction, primarily because dissolved

inert contaminants are generally always present in measurable amounts. 5000 ppm is the impurity limit in the propellants, and engines have run many times with far more impurities with no ill effects.

The Florida Research and Development Center buys LO_2 and LH_2 in accordance with military specification. Helium is checked for N_2, O_2, and volatile hydrocarbon content. GN_2 is checked for O_2 and argon content. LN_2 is checked for nonvolatile hydrocarbon content. LO_2 is checked for nonvolatile hydrocarbon content, N_2, and argon. They use a Beckman GC-1 for gas analysis and a Beckman hydrogen flame hydrocarbon analyzer for volatile hydrocarbons. For nonvolatile hydrocarbons, they evaporate 25 gal. of sample in a covered stainless steel cylindrical pot, rinse the nonvolatile residue with trichloroethylene, evaporate the trichloroethylene, and weigh the residue. Dew points are taken on cylinders of GN_2 and helium by means of the dew point cup using dry ice and acetone as the coolant. No moisture monitors of any sort are used on the propellants or pressurants on a continuous basis.

The RL-10 engine and applied research projects at this facility are primarily concerned with the cryogenics and their gases. GN_2 is supplied through a 5-mi-long carbon-steel line. It is pumped at 5000 psi and 70,000 scfh. It normally contains 5 to 10 ppm O_2, but reaches 20,000 ppm on occasion. An Analytic Systems Company trace oxygen analyzer with a Honeywell Electronik 18 recorder is used at the P&W receiving end of the line for continuous monitoring. Standards for calibration are bought from Mathieson.

Generally LN_2 for conversion is sampled rather than the conversion product (GN_2) unless its use is critical. Filters in the GN_2 system are changed on a maximum ΔP basis. Filters on the test stands are changed on a fixed-period basis. For sampling new systems, a diaper or similar cloth is stuffed into the end of the line and a full system blowdown is made through it. Judgment of acceptability is qualitative. The GN_2 system is not tested for particles.

5000-gal. dewars usually contain sand and other solid contaminants. Amounts up to half a cupful after a year's use have been noted, particularly in new dewars. This is not a problem, because the contaminants do not flow into the system to any serious extent.

K bottles are sampled for particles by means of the aerosol monitor holder equipped with an 0.8-micron membrane, at a pressure of 5 psig for a 5-min period. Tube trailers are not sampled for particles. Mr. Guthrie agreed that particle sampling at a mass velocity less than that of system capability is probably not valid. P&W makes its own purity sampling bombs from 3-in. pipe with welded end domes.

Samples for volatile hydrocarbons in N_2 are taken by means of a bomb sampler. The bomb is purged from system pressure to ambient 25 to 50 times with the gas to be sampled before collection of the final sample. Helium is received in K bottles and railroad tube cars. Each railroad car is sampled. K bottles are sampled on a lot basis. For a number of years every bottle was sampled. After a history survey showed that none was ever rejected, the sampling plan was reduced to the lot basis. The helium is checked, as previously stated, for N_2, O_2, and volatile hydrocarbons. Samples for particle contamination are not taken. A Beckman dew point indicator is periodically used on helium for the RL-10 engine (where it is used for valve actuation only).

Robbins RAF dryers with molecular sieve units are used both at the system origin and at the test stand.

It is presently not possible to obtain gas purity, impurity, and moisture standards, which are traceable to the Bureau of Standards, for calibration of the instruments. This is an area of serious deficiency. Mr. Guthrie has heard that separation does occur in these low-concentration standards and is especially critical below 100 ppm. Mathieson periodically rolls their stock bottles around on the warehouse floor to counteract this.

GO_2 is not used in the test area.

In LO_2, inert contaminants are the main concern, particularly N_2 and argon. The vendor's analysis is accepted with a periodic spot check. The source is generally Air Force Plant 73 located at the Cape. P&W requires that the qualification samples be taken from the trailers after loading. These trailers also deliver LN_2 to the Cape and if they are not purged adequately, a bad lot of LO_2 could be delivered. P&W generally uses the Cosmodyne cryogenic sampler, but, when these are not available, samples are

taken in a regular double-valved bomb equipped with pressure gages and relief valves. The procedure for the use of these bombs was not described.

10. Survey at Air Force Plant 74, Stearns-Roger Corporation, West Palm Beach, Florida

Donald L. Williams, Laboratory Supervisor

Process and product stream instrumentation includes a Gow-Mac ortho/para meter, an Analytic Systems Company O_2 analyzer (this is the one with the fritted silver electrode in KOH), a Beckman electrolytic hygrometer, an MSA infrared analyzer (Model MG3823 for CO_2 in H_2), a Liston Becker infrared analyzer (for process gas), and an Arnold O. Beckman oxygen analyzer (for LN_2) Model F-3.

All H_2 instrumentation is read out in a central control room as well as at the point of measurement. All O_2 and N_2 instrumentation is read out at the point of measurement located in the individual air plants. Most of the standardization gases, including moisture standards, are obtained from Air Products and are in K bottles.

LH_2, LO_2, and LN_2 purity samples are taken by means of Cosmodyne cryogenic samplers. Liquid O_2 and N_2 are sampled for particles by flowing 5 liters through a Gelman glass fiber filter, Type A, held in a Millipore high-pressure membrane holder with a Teflon gasket (not an O ring). The criterion for acceptability is that less than 5 mg of solids be obtained by this procedure. No particle counting or sizing is applicable.

The requirements of the LO_2 and LN_2 are 99.5% minimum purity, 26.3 ppm of maximum moisture, no acetylene by colorimetric method, less than 67 ppm of hydrocarbons in LN_2, and less than 59 ppm of hydrocarbons in LO_2 (both by volume as methane).

11. Survey at Douglas Aircraft Company, VAFB, Field Station (A-31)

I. Patrick Hansen, Materials Research and Production Methods, Department A-31-231.

Douglas Process Specification (DPS) 43200, issue 4/1/65, covers sampling and analysis of all gases (GN_2, helium, plant air) for contamination control. Sampling Procedure DLP 13.730 covers sampling and analysis of high pressure gases. DPS 44101 contains the RP-1/RJ-1 fuel-handling requirements.

Sampling is performed by qualified samplers (sampling personnel in the Manufacturing and Production Department A31-565 and A31-562). Records of qualification are kept in the Quality Control Department A31-730.

There is no automation of monitoring or plug-in-and-read instrumentation used by Douglas VAFB for contamination control other than the moisture monitor, CEC 26-350.

For sampling particles in gases, the standard Millipore high-pressure membrane holder with a 5-micron (SMWP or G-047-00) membrane is used at maximum flow rate of the system or 500-psig limit. 30 cu ft or more of gas is sampled. No pressure gauge is used on the sample tool. System pressure gauges are used to determine inlet pressure to the membrane. The Consolidated American Services Cleaning Facility at VAFB cleans the sampling equipment, installs the membrane and reassembles the tool, and returns it to DAC with a background (blank) particle count of the membrane. After sampling, the assembly is sent to the Air Force Propellant Laboratory on the base for membrane removal and particle counting. No written procedure exists to instruct the samplers to carry the high-pressure holder with the inlet side of the membrane horizontal and facing upward nor does the AF laboratory flush the inlet portions of the holder and add the rinsings to the particle count.

All cryogenic sampling is done with the Douglas liquid oxygen sampler (Drawing X3809990). This vaporization-type tool is similar to the Cosmodyne model except that the cryogen entrapment chamber is exterior to the vaporization chamber and is hence not precooled by exterior flow. The bomb is not rinsed with solvent after sampling unless a sample shows excessive organic contamination. Hence condensable organics are not necessarily determined

in the vaporized sample. When determination of condensable organics in the liquid oxygen is deemed necessary it is accomplished by analyzing a liquid sample that has been allowed to evaporate in clean laboratory glassware under controlled conditions. The glassware is then rinsed with spectrophotometric grade carbon tetrachloride, which is then analyzed by spectrophotometric methods. The bomb is cleaned by C.A.S. in accordance with DPS 43000 (Liquid Oxygen Systems).

Sampling for condensable organics in gases is performed by flowing them through ½-in. stainless steel tubes filled with crushed firebrick. The flow through these tubes is controlled to 100 liters of gas/min for 14 min, as measured with a flowrator downstream of the sampling tube. The firebrick is then extracted with carbon tetrachloride and the organics measured quantitatively by infrared spectrographic methods at a wave length of 3.42 microns.

Operational and preventive maintenance samples of RJ-1 are taken after the fuel in the storage tank has been made homogeneous by operating an antistratification pump for a period of time not less than ½ hr or until the temperature in the tank has been stabilized, whichever is the longer time. Contamination in the storage tank will be detected under these conditions. The procurement samples are taken in one-gal. glass jugs with polyethylene or aluminum foil beneath the cap. These are analyzed only to the requirements of the military specifications and are taken while the vendor transport is filling the receiving vessel and after 500 gal. have been flowed.

Both LO_2 and RP-1 are sampled three days before launch. The certification afforded by sample acceptance is voided if any additions are made to the respective systems, or if any opening is made into the systems. No particle counts are applicable.

No isokinetic sampling probes, sampling wedges, turbulence valves or any other sampling equipment, other than simple taps, are used. System filters on the vendor side of the receiving vessels are removed and backflushed at disassembly, and the retained particles are examined after each delivery.

The GN_2 delivered from the Douglas-operated Cosmodyne converters is not sampled. Regular sampling is performed on the LN_2 that is in the converter.

Taking of samples from the LO_2 tank, the RJ-1 tank, and the GN_2 tube bank trailer was observed by the Martin Survey and Evaluation Team. The fire hose was kept running during the sampling operation. No special fire equipment was used for the RJ-1 sampling. Normal safety requirements were observed and normal fire-fighting equipment was readily available. The LO_2 sampling was conducted in accordance with the process.

The GN_2 tube bank trailer was sampled for particle content and moisture. The sampling procedure for the moisture-monitoring operation was straightforward. Flow calibration is required by written procedure, reference DPS 4.940. The particle sample was taken for 2 min (30 cu ft total volume), and there are no filters on the tube trailer. The inlet pressure was 600 to 700 psi.

A problem in the particle sampling procedure was the abnormally low flow velocity from the tube trailer caused by the sintered orifice flow restrictor downstream of the membrane. This flow rate would not be representative of the particle-carrying characteristics of the operational delivery rate from the trailer. Concerning this statement, the following comment was submitted by Douglas Missile and Space Systems Division: "The concern here (requirement for the sample) is not one that results in the certification of a GN_2 system. The requirement here was to determine that particulate contamination, introduced as a result of changing valves, had been successfully removed by purging operations. The pressure dampener, P/N 4725952-501, was utilized in this instance for evaluation purposes. Certification of operational systems is accomplished in accordance with the written procedures specified in DPS 4.940, and for this purpose the flow resulting from a pressure drop of 500 psig across the membrane, or the maximum flow deliverable by the system, is quite adequate for certifying system cleanliness with respect to particulate contamination."

In the broader sense, however, this problem is not important in the case observed for the reason that particle sampling from large-volume, high-pressure gas containers is absolutely invalid and meaningless since no parameter other than full-volume flow, complete blowdown from maximum pressure to ambient pressure through a full stream collection device means anything in terms of the particle delivery capability of the system. Even this meaning is invalidated when the system is moved (as the tube bank trailer must be). Consider 40,000 scf of gas at a pressure of 2200 psi

bleeding down at 15 scfm, which was the approximate flow rate of this sampling procedure. The internal mass movement of the gas produced by this bleed rate will scarcely influence the random molecular motion. It certainly will not provide a transport capability for particles not suspended by Brownian motion and having densities significantly higher than those of the pressurized gas. Anything several orders of magnitude larger than the molecules of gas themselves is going to remain where it is, on the bottom of the tank. The nonvolatile residue was taken by flowing the gas from the same port used for particle and moisture sampling, at a flow rate of 101 liters/min, through a ½-in. stainless steel tube filled with crushed firebrick. As is pointed out in Survey Form No. 006, some concern exists that the residual $CC\ell_4$ left in the firebrick by the laboratory extraction (elution) process would affect the absorbency of the firebrick.

12. Survey at Lockheed Missile and Space Company, VAFB

Paul Sladek, Process Engineer, Base Process Engineering (Dept 77-01), Operations Support

Mr. Sladek is in charge of all sampling procedures for Lockheed at Vandenberg. In general Lockheed documents do not define contamination limits for propellants and pressurants except for military specification references. However, modified dissolved solids limits in IRFNA are listed in the Lockheed launch and hold limitations specification (which are issued for each vehicle), and a macroscopic visual check of a sample bottle of IRFNA for particles is required. Also LAC 1481B lists particle criteria classes by size-range and number without equating them to volumetric or area limits. The tables of absolute values are then equated to the volumetric limit by the sampling plan. No interpretation is permitted in the analysis results, and apparently no overriding action is possible. If the sample contains one excess particle, it fails.

The following sampling plans were obtained:

1) TP3000057 (VAFB) for particle sampling of gases;

2) TP3000166 (VAFB) for moisture sampling of gases;

3) TP3000056 (VAFB) for quantitative sampling of gases (apparently % GN_2 in GN_2-and-Freon mixtures).

The launch samples for the storables are taken from the transfer system during recirculation and are analyzed only to the requirements of the military specifications. No automatic monitoring is used except for the CEC moisture monitor. Mr. Sladek believes that the longest particle dimension is a poor criterion for particle counting and that some other criterion such as particle volume, cross-sectional area, or median dimension would be more pertinent. He believes that zone-sensing devices would be vastly superior to microscopic methods as indicators of the true particle contamination condition of the systems.

Particle and moisture sampling were witnessed by the Martin Survey and Evaluation Team. A HAWG 04700 membrane in the standard Millipore high-pressure membrane holder was used both as the particle-sampling device and as the flow control orifice. In the procedure observed, no regulator was used between the system and the membrane holder. In TP3000057, however, three of the four sampling methods listed provide for accessory regulators to be used between the sampling point and the sampling tool (membrane holder). The fourth provides for using the moisture monitor to provide this regulation. The moisture-monitoring procedure was straightforward and in accordance with TP3000166. They used a bubble-o-meter for setting the flow through the moisture monitor.

13. Survey at General Dynamics/Convair, VAFB Field Station

Carl E. Vaughn, Quality Control (Reliability Control) Field Operations

LO_2, LN_2, GN_2, helium, and RP-1 are used and are sampled by GD/C at VAFB. The sampling procedures are described in "Fluid Sampling Procedure" 27-93985-1 SLV-3, WTR, Code Ident No. 05342, prepared by GD/C.

LO_2 is sampled for use limits established by military specifications and as listed in Air Force Ballistic Systems (AFBS) Exhibit 61-3C. The Cosmodyne sampler is used for purity determinations and a dewar for particle determination. Total filterable solids determination is used with no particle size limit or count. Samples are taken before offloading vendor transports, after propellant loading, and from the storage tank before propellant loading. RP-1 is sampled in glass bottles cleaned by Consolidated American Services. An FPU unit, which recirculates the fuel and dewaters it, contains a water sensor that indicates quantitatively. Samples are taken from the vendor transports before system loading and after offloading the vehicle. The sample is taken from simple side taps and from static volumes. No dynamic samples are taken.

GN_2 is sampled to the requirements of AFBS Exhibit 61-3C each time a new vendor transport is attached to facility delivery lines. Moisture is periodically monitored in the pressure lines leading to the vehicle. A Consolidated Electrodynamics Corporation moisture monitor is used. A particle sample is taken only during new procurement delivery.

A unique type of membrane holder, consisting essentially of two cones joined at their base by what appeared to be a Marmon clamp with 1/4 or 3/8-in. AN opening at one apex and about a 3/4-in. AN opening at the opposite end, is used by GD/C. It was identified by acid-etch nomenclature as "GDA P/N 27-41-000-903, USAF Prop. TSTO U-18, "A/G" M, S/N 405488 NECM S.N. 1307." The tool was conceived and manufactured by GD/C and is used to sample tube trailers. It uses approximately a 142- or 147-mm membrane of 0.45-micron retention.

The Millipore high-pressure holder and membrane for particle sampling is used only after line modification or vehicle contamination is observed. A 0.45-micron membrane is used. Flow is controlled by reading pressure upstream of the holder. No other control orifice is used. A 30-cu ft sample is flowed through the membrane.

Bomb samples for hydrocarbon determinations are taken only in very special cases and have been used only twice in two years.

Helium is certified by the Bureau of Mines and supplied by the Air Force pipe line. An occasional bomb sample is taken for hydrocarbon content. The high-pressure membrane holder is used for particle samples but at no specified frequency. Both sampling methods are used in failure analysis attempts and after system modification.

The Cosmodyne sampler is used for LN_2 purity determinations. A dewar is used for particle sampling, and analysis is performed by the Air Force Laboratory. LN_2 is used as a pressurization source for the vehicle. The Cosmodyne unit is cleaned at a specified period of maintenance, i.e., every six months and, additionally, after a sample is taken, if it fails to meet the criteria in AFBS Exhibit 61-3C.

Isokinetic-type flow-sampling devices of the homemade variety have been used in sampling particle matter in systems in the past at this facility; none of these devices was entirely satisfactory and none is used at present. Mr. Vaughn stated that he has held the opinion for a number of years that some particle characteristic other than the longest dimension should be used in defining particle limits.

14. Survey at Air Force Aerospace Fuels Analysis Laboratory

Major Haire

Mr. Lakata

During the visit to this laboratory, the various instruments and methods used for analysis of the fluids used at VAFB were observed. All analyses are performed according to the provisions listed in the military specification that is applicable to each fluid. Such instrumental methods as infrared and gas chromatography are supplementary to the military specification methods.

These gentlemen knew of no automatic monitoring in practice at any of the facilities at VAFB except for moisture monitors. They believe that other characteristics than longest particle dimension are desirable for particle definition to allow the use of zone-sensing devices.

15. Survey at Consolidated American Services, VAFB

Charles Marsh, Facility Manager

Donald G. Winchell, Quality Control Manager

Byron Dahle, Shift Supervisor

Jack Orman, Production Manager

Consolidated American runs the Air Force-owned cleaning facility at VAFB that is responsible for cleaning and servicing sampling equipment for all contractors.

Two cleaning procedures are used for the Cosmodyne cryogenic samplers and for the Hoke bomb samplers used for gases and for toxic storables. The first, identified as the regular cleaning performed after each sampling operation in which the sample met the organic criteria, consists essentially of purging the containers with filtered GN_2 and then placing them in a 200°F oven

for at least two hours while the purge is continued. An effluent check for particles is then made on the GN_2 with a high-pressure membrane holder. No particles over 80 microns in length, fibrous and nonfibrous, are permitted. The membrane is examined with ultraviolet light for organics. A moisture monitor (CEC 303) is used to check the dew point (-63.5°F max), and then the container is charged with a residual head pressure of 50 psi with either GN_2 or GO_2 according to the customer requirements. Metal caps are placed over all parts, sealed with vinyl tape, and a frangible, QC-stamped label is applied over the tape. The tape is applied as one continuous spiral winding with a pull tab so that its removal is a one-handed operation that ruptures the frangible seal when it is initiated. No disassembly is involved in this cleaning procedure. The second procedure is the periodic cleaning procedure that apparently derived its name from the fact that the customers call for its performance on a periodic basis with a frequency established by themselves. It is also performed, however, when any sample taken in the device has failed the organic criteria. For this procedure, the cryogenic sampler or bomb is completely disassembled and cleaned with trichloroethylene or Freon PCA, tested with a General Electric halogen leak tester for residual halocarbons, inspected with ultraviolet light, reassembled with new soft kits and valve and thread lubricants defined by the customer, pressure tested (2000 psi for bombs, 200 psi for cryogenic samplers), subjected to the purges and effluent tests used in the regular procedure, and, finally, similarly sealed.

The high-pressure membrane holders are completely disassembled after each sample, cleaned as detailed by regular procedures, and ultrasonically cleaned in the white rooms. Cleanliness is then verified by test of an effluent rinse (customer requirements or in-house criteria, viz., nothing over 80 microns). The parts are then inspected with ultraviolet light, reassembled in a laminar flow bench in the white rooms. New O rings (silicone or Teflon-faced, as stipulated by the customer) are installed each time, and customer-designated lubricants are applied. The holders are proof tested to 2000 psi, leak tested (except for Lockheed's), and fitted with membranes designated by the customer. All parts are identified by serial number and reassembled into the same composite. C.A.S. has found that they are not interchangeable.

The membrane to be installed is examined with a magnifying glass and flushed with Freon PCA. A background count is made microscopically over the entire surface. The membrane is then installed in the holder. The assembly is again inspected with ultraviolet light. Bolts are tightened finger-tight and then

forced 1/4-turn. Ports are capped with AN caps and the units are double-bagged with the membrane blank-count attached by a pressure-sensitive adhesive label.

The dewars (used for sampling cryogenics for particles) are cleaned by trichloroethylene flush, and the effluent is checked to customer or in-house criteria (less than 80 microns). They are then inspected with ultraviolet light. This inspection is performed directly through the neck for bottom sediments, or it is performed on the nonvolatile residue and on the membrane used for effluent filtration.

Consolidated American has found that it is not wise to chemically clean these copper and lead containers by methods other than solvent degreasing because of excessive metal loss in attempting to achieve a blemish-free surface. This was done formerly and metal-loss studies indicated a dangerous attrition. Glass sampling bottles are cleaned by conventional methods. Particle counts are performed on final flush effluents to customer or in-house criteria, but nonvolatile residue and total filterable solids determinations are not made. Nothing is cleaned to levels less stringent than those provided in Air Force TO 42C-1-11. MIL-Q-9859 applies to all procedures, forms, and controls. AFTO Form 211 is used by the customers to submit equipment for cleaning. Clean rooms are monitored by a Gelman Sentinel Monitor. Procedures in ARP 743 are followed.

Consolidated American is presently doing a statistical comparison of their microscopist's work using the Millipore prepared slides. They are also attempting to resolve whether NVR should include solids.

Consolidated American believes that some parameter other than longest particle dimension for particle definition could be utilized to allow the use of zone-sensing devices (with fluid-sampling backup capability).

16. Survey at General Electric, VAFB

Thomas L. O'Neill, AGE Engineering Department

GE samples MMH (25%)/N_2H_4 (75%) mixtures, N_2O_4, GN_2, and helium at VAFB. The Millipore high-pressure membrane holder (47-mm), equipped with a 0.45-micron membrane, is used for sampling of gases to determine particulate contamination. No restrictive orifice is used. The Hoke bomb sampler is used for sampling the storable propellants. Samples are taken before launch. Samples are also taken from tube trailers after system breakin.

Mr. O'Neill stated that he favors using some particle parameter other than the longest dimension for particle definition so zone-sensing devices may be used for routine system control, providing fluid samples may be taken when sample failure occurs so the particle matter may be examined microscopically. GE places emphasis on the qualitative as well as the quantitative evaluation of particle matter to determine cause of failure.

No sampling other than facility gases takes place except at the launch site.

17. Survey at Aerojet-General, VAFB Field Office

John Adams

No GN_2, helium, or other gases are used or sampled by AGC at VAFB. No liquid propellants are used or sampled by AGC at VAFB.

18. Survey at Boeing Pacific Test Center, VAFB

James Chandler, Department 285-22, Quality Control Manager

Boeing uses no liquid propellants or pressurized gases at VAFB and does not sample any used by other contractors.

19. Survey at Rocketdyne, VAFB

William Orton, Field Engineering, Department 593, Vandenberg Field Operations

Rocketdyne VAFB is in the status of pure engineering support in that all sampling is done either by the Air Force or by the system integrator.

20. Survey at Rocketdyne Nevada Field Laboratory, Reno

Russell Baker, Supervisor, Quality Control

This facility is concerned with MMH, N_2O_4, and GN_2. They use no automatic monitoring equipment for detection of contamination in operational fluids.

N_2O_4 is analyzed in accordance with the military specification that allows 0.1% maximum moisture. This is interpreted at this facility to mean anything less than 0.14%. Particles are analyzed

in both propellants to the requirements of Level 4 of RA 0615-003. Samples are taken at only one location, downstream of the clean holding tank from the engine-feed manifold, where they are upstream of the final system filters. These filters are about 3-micron Millipore membranes for the MMH engine supply and 10-micron Microporous (stainless steel mesh) for the N_2O_4 engine supply. No isokinetic flow-sampling devices are used for particle sampling.

The sample for particulate content is drawn directly into a standard glass Millipore funnel assembly with vacuum flask, equipped with an OH-type membrane, through a tube fitting fastened to the sampling point. 500 ml of fluid are first purged to waste after the sampling valve is opened and a 100-ml sample is then taken without adjustment of the valve. Atmospheric and environmental particle contaminants are kept from the funnel by the use of a 142-mm type OS Millipore membrane and a polyethylene sheet with a 1/2-in. hole over the funnel. The filtration is completed at the site of sampling and the assembly removed to a clean room for counting after disposal of the filtrate.

The probe is rinsed with Freon TF filtered to Class 4 before sampling. Chemical samples of N_2O_4 and MMH are drawn into the locally-actuated flanged bottle samples (D7136113 panel) in conjunction with the CT136102, CT136112 or ET136115 sample containers (manufactured by Rocketdyne). No remotely actuated sampling is performed at this field laboratory. MMH is sampled weekly, and N_2O_4 is sampled daily for purity. Samples for particulate content are taken daily for both systems when tests are in progress. These samples qualify the systems for 24 hours unless the system is broken into.

GN_2 is sampled for particle content every two days using the high-pressure Millipore membrane holder equipped with an HA membrane. A one-cu-ft sample is taken at full system pressure. The Teflon O rings are replaced for each sample.

Sampling operations performed at the field laboratory to determine particle content of fluids are described in INFL 30004, Rev 2, dated 26 February 1965, "Procedures for Determination of Particulate Contamination by the Particle Counting Method and Sampling of Test Media."

No sampling for determination of purity of GN_2 or of the LN_2 used for conversion on-site is performed. No sampling of fluids is performed at time of delivery. The suppliers' certifications to the military specifications are accepted in all cases. Tube trailers are not ordinarily used on-site and are not sampled when they are. The GN_2 samples are taken downstream of the filter bank in the manifold. This filter bank consists of four high-pressure Millipore membrane holders in series. All GN_2 is converted from LN_2 on site.

The potential use of zone-sensing devices for particle counting was discussed, and Mr. Baker believes that they would be desirable for routine control, provided they were supplemented with periodic microscopic examination for qualitative evaluation. He believes that the cross sectional area of a particle is inherently a better index of its danger than is the longest dimension.

Mr. Baker described an incident at the field laboratory involving regulators containing diaphragms that were incompatible with the MMH and N_2O_4 and consequently degraded in service. The diaphragms generated plasticized particles that extruded through two-micron Millipore membranes. The particles were as large as 100 microns in undistorted form. This phenomenon was proved by microscopic examination of the membrane that caught some of these particles halfway through the membranes.

21. Survey at Aerojet-General Corporation, Sacramento, California

Gene R. Getty, Supervisor, Analytical Chemistry Department, Quality Control Division

J. A. Curtis, Supervisor, Analytical Instrumentation Department

W. J. Harr, Quality Engineer, Quality Control Department

E. A. Witt, Chemist 1/C, Raw Materials and Special Testing, Quality Control

W. E. Spargo, Supervisor, Process Controls Laboratory

Dr. G. R. Tichelaar, Analytical Chemistry Laboratory

LO_2 is accepted by vendor certification, and there is no sampling on delivery. It is delivered to a bonded storage tank. It is sampled by means of a Cosmodyne cryogenic sampler, and an Orsat analysis is performed to certify purity. There has been a problem

of interchange of Air Force transports between LN_2 and LO_2 service, sometimes both being delivered in one day. Loads have been rejected due to the resulting impurities. The cryogen is delivered to a single storage tank on Aerojet premises that is sampled monthly and thence to the run tanks in the individual test areas from which weekly samples are taken. The material in the storage tank is tested to the requirements of the military specifications and the material in the run tanks is tested to the requirements of AGC Spec 44019. Cosmodyne samplers are used for purity sampling and a Perkin-Elmer 154 gas chromatograph is used for analysis; an IR-5 infrared analyzer is used for determination of hydrocarbons; moisture is determined by means of a CEC moisture monitor. The Cosmodyne cryogenic sampler is filled in line with a 10-liter dewar. This 10-liter dewar sample is used for determination of total filterable solids. One liter of fluid from the dewar is passed through a high-pressure Millipore membrane holder, containing a WS membrane, by pressurization of the dewar with GN_2 in a static condition.

The effluent tube extends to the bottom of the dewar. The dewar is not rinsed between samples unless excessive total filterable solids are found. No particle count is made; only the total filterable solids are determined. The limit is 1 ppm, and there is no problem in meeting this requirement routinely.

Hydrocarbons are determined as methane and acetylene. Nonvolatile hydrocarbons are not determined, and the sampling container is not rinsed between samples unless a volatile hydrocarbon failure occurs. The Cosmodyne cryogenic sampler is dried with clean, filtered air, the effluent is checked by a CEC moisture monitor, and then is evacuated. A 10-meter gas cell at 100 to 150 psi is used to determine hydrocarbon content. LH_2 is delivered and handled in accordance with the NASA directive, which in essence states that it is not to be sampled, but rather the vendor certification is to be accepted. It is never sampled.

RP-1 has not been in use at this facility for 3 or 4 years.

N_2O_4 is delivered in railroad tank cars. These are sampled according to a multilevel sampling plan that is described in QCBS-912. QCS-8-1-1 contains sampling frequencies and techniques, and AGC-44055C contains use specifications for a number of operational fluids. Samples are taken from the discharge line during unloading. It has been found unwarranted, historically, to take thief samples from various levels in the tank. The N_2O_4 is unloaded through a 325-mesh filter and delivered to three main

storage tanks, and from them to the run tanks at the test stands. The samples are taken in bombs manufactured by Aerojet. Samples of storage tank contents are analyzed to the requirements of the military specifications; samples of run tanks contents are analyzed to the requirements of AGC 44055C. Moisture is the worst problem involved in the use of the sampling bombs. Frequency of sampling and sampling techniques are given in QCS-8-1-1.

Samples are taken from the bomb for determination of total filterable solids only, except for the Apollo program, for which a particle size-and-count determination is required. The latter is taken in a high-pressure Millipore membrane holder equipped with an OS membrane flowing to the sampler. The sampling point is downstream of the final inline system filter.

UDMH, bought to MIL-P-25604C, and hydrazine, bought to MIL-P-6536B, are mixed to form Aerozine 50 (A-50) in accordance with AGC 44055C. Each blend is sampled from the mix tank, which then becomes the storage tank. Periodic samples are taken in pint bottles and assayed on the Perkin-Elmer 154 gas chromatograph for UDMH, hydrazine, and moisture. The only particle determination made is for total filterable solids, except for Apollo usage where the method is analogous to that used for N_2O_4.

GO_2 is not used.

GN_2 is certified to the requirements of the military specification as received. Monthly samples are taken from the cascade bottles in a 10-liter Aerojet sampler for purity and moisture determinations. It is never sampled for particles. Purity is determined on a Perkin-Elmer 154 gas chromatograph, moisture is determined by the use of a CEC moisture monitor, and hydrocarbons are determined on a Beckman IR-5 infrared analyzer.

Helium is occasionally sampled for purity only. Vendor certification is generally accepted. Methods are those used for GN_2.

LN_2 in storage vessels is periodically sampled by means of a Cosmodyne cryogenic sampler and a dewar as for LO_2, and analyzed in accordance with the requirements of the military specification. LN_2 in the run tanks is sampled similarly and is analyzed to the requirements of AGC 44019.

Sampling for determination of moisture content is a problem as it is in any cyrogen. When purity is determined on the gas chromatograph, argon will often be out of specification. By the Orsat method, however, as defined in the military specification, argon is not distinguishable from nitrogen, and the material meets the specification requirements. This is a problem, and the military specification should be brought up to date to reflect reality in this regard. It was agreed that moisture sampling from sampling bombs is of questionable validity, that particle sampling of large volume, high-pressure gas storage devices without complete blowdown through the sampling device is worthless, and that the longest particle dimension is a poor criterion of definition for particle contamination. The Aerojet personnel prefer a total filterable solids determination.

No isokinetic sampling devices or on-stream monitoring devices pertinent to the scope of the study are in use at Aerojet.

In the Process Controls Laboratory, a Royco Model 320 particle counter was viewed in action counting particles in Freon TF. The performance of this device has not been compared by Mr. Spargo with microscopic counts of the same fluid because he believes that the microscopic method is so inaccurate that the comparison would have little value. Dow polyvinyltoluene spheres, certified to NBS requirements, have been used by Aerojet in producing counts within counting ranges. Mr. Spargo has faith in the validity of the Royco counts, that is, their accuracy, and does not believe that the HIAC can measure up to it in performance. He intends to use this instrument instead of microscopic counts wherever possible in the future.

Dr. G. R. Tichelaar, the mass spectrographer, stated he believes that instruments providing fixed mass-number readouts with totalizers (as opposed to total scan instruments) would offer promise of instrumenting at least some of the parameters of interest in the study. A Coulter counter was then viewed in operation. It was agreed that this instrument has value in the counting and sizing of powder classifications, but that the possibility of its use for on-stream analysis of naturally occurring particle spectra, as in operational propellant and pressurization systems, is remote.

22. Survey at Douglas Aircraft Company, Rancho Cordova Test Facility

E. J. Sorrentino, Manager, Reliability Assurance Branch

Peter Francesconi, Section Chief, Quality Engineering

F. R. Galpin, Supervisor, Process Control, Quality Engineering

William Carlton, Quality Engineer, Quality Engineering

LO_2 and LN_2 are sampled every two weeks or before vehicle load. The samples are taken from the storage tanks. Criteria are contained in Douglas Process Specification (DPS) 40101 entitled "Liquefied Gases." The DPS requires that the tank be sampled additionally when the remaining fluid drops below 10% of capacity, but this has never happened. Sampling of LO_2 and LN_2 at time of delivery is performed to military specification requirements.

Samples for purity are taken in Cosmodyne cryogenic samplers and are analyzed on the Perkin-Elmer 154 gas chromatograph. A Beckman IR-8 infrared analyzer, with a 10-meter gas cell, is used for volatile hydrocarbon and acetylene determinations. The cell is used at 90 psi.

After evaporating 500 ml of fluid from a dewar, the nonvolatile residue is extracted with $CC\ell_4$, which is then analyzed for nonvolatile hydrocarbons on a Perkin-Elmer 137 or a Beckman IR-8 infrared analyzer. There are no requirements to determine particle content in samples taken from the storage tanks.

There is no routine sampling requirement for LH_2. Occasionally the storage tank is drained and allowed to warm to ambient temperature and the contained gas is analyzed for O_2 and purity. Information from these analyses is not available.

RP-1 is not used.

N_2O_4 is sampled in Teflon bottles from the 2,000-lb shipping containers. MMH is sampled in an identical manner from the 55-gal. drums in which it is received. The N_2O_4 and MMH service carts are sampled before test-firing of a module, or when an addition is made to the respective servicer. Analysis is totally by wet chemistry to military specification requirements. No samples for particle content are taken from either fluid. Cosmodyne samplers are available, but have not proven successful when operated according to present procedures.

GO_2 is not used.

GN_2 and helium are sampled by four methods:

1) A 500-cu-in. vessel is pressurized with the sample gas to between 25 and 75 psi. Purity is determined on the PE 154L for GN_2 and on the CEC-620A mass spectrograph for helium;

2) The nonvolatile hydrocarbon content is determined by flowing the gas directly from the system through a crushed firebrick tube at 100 liters/min for 14 min. An infrared analysis is performed on a $CC\ell_4$ extraction of the firebrick;

3) Samples for particle content are taken directly from the system by flowing the gas, at 100 psi for 2 min, through a high-pressure Millipore membrane holder, containing an 0.8-micron, black, gridded membrane. No restricting orifice is used. There is no total filterable solids requirement. The membrane holders are carried in a tool, inlet side up, but the sampling documentation does not provide for this or specify the tool. Teflon-faced O-rings are used, and they are not replaced between samples. The membrane holders are flushed and assembled in an Agnew-Higgins laminar flow bench in a clean room immediately following the unloading and counting of the sample:

4) Moisture is determined by means of the Beckman electrolytic hygrometer.

DPS 43200, "Testing and Purging Gases," contains the requirements for GN_2 and helium. Gas purity sampling containers are not cleaned or rinsed between the taking of samples. They are evacuated to less than 1 mm absolute pressure, and purged fifteen times with the gas to be sampled, before lockup of the purity sample. Sample volume for purity samples has recently been reduced to 500 ml by the introduction of new stainless steel bottles. There are no automatic monitoring devices used at Rancho Cordova other than the Beckman electrolytic hygrometer.

A-50 is not used at this facility.

23. Survey at Lockheed Missile and Space Company, Sunnyvale, California

Roger Matzdorff, Supervisor, Propulsion Analysis, Research and Development Division

M. C. Towns, Senior Staff Engineer, Propulsion Analysis

Karl P. Mason, Materials and Process Engineer, Materials and Process Laboratory

S. W. Brewer, Subsystems Reliability Engineer, Flight Controls

LO_2, LH_2, RP-1, N_2O_4, A-50, GO_2, GH_2, LN_2, and MMH are not used as operational fluids. Some are used in research. For GN_2, moisture content is indicated directly from the system by a Beckman electrolytic hygrometer. Sampling for particle content is performed by means of a high-pressure Millipore membrane holder equipped with a 0.45-micron, white, gridded membrane, plumbed to the system with a flex hose. A flowrator is used to ensure that the maximum mass-design flow rate of the system is attained during sampling. No regulators are ever used between the system and the membrane.

Purity sampling of this fluid has not been performed previously, but it is intended that it be done in the future by means of a double-ended Hoke bottle. A Perkin-Elmer Model 880 gas chromatograph and a Perkin-Elmer 421 infrared analyzer will be used for the purity analysis.

Mr. Mason stated that the longest particle dimension and microscopic procedures for particle counting from operational fluids are obsolescent and that no time should be lost in converting to automated methods using some other significant parameter such as cross sectional area. He believes that the entire industry should make this conversion simultaneously.

24. Survey at Lockheed Missile and Space Company, Santa Cruz Test Base, Santa Cruz, California

Werner Deeg, Supervisor, Chemistry Laboratory, Propellant Technology Department

W. E. Vinton, Lead Engineer, Test Support Department

Charles Tamagni, Systems Test Engineer

LO_2, LH_2, and N_2O_4 are used in research. They are accepted on the basis of vendor certification and are not sampled.

RP-1 is not used.

A-50 is not used but UDMH is used as an operational fluid. At the time of delivery, samples are taken in glass bottles with Teflon caps. All UDMH is procured in 55-gal. drums that are sampled from the center of fluid mass by means of a thief-sampler after each drum is rolled for several minutes. The samples for determination of purity are taken in chemically clean bottles, and the samples for particle content are taken in separate bottles, additionally cleaned to a known particle level (class 0 or better). The fluid is recirculated in a transfer trailer and sampled again for both parameters from the recirculation system. At the time of vehicle loading the sampling procedure is repeated from the transfer line. There are no separate sampling procedures; all operations are performed in accordance with notes in the test procedures. Particle-content determination is made for total filterable solids content only for the primary propulsion system. Total filterable solids as well as particle size and count are determined for the secondary propulsion system.

MON (mixed oxides of nitrogen) is used as an operational fluid. It is sampled in a manner identical to that used for sampling UDMH, except that double-valved Vacco bottles are used rather than glass bottles.

GO_2 is not used.

GN_2 is sampled for particle and moisture content only. GN_2 is produced from LN_2 on-site and is sampled in many places throughout the system, more as a check on the system hardware than as a check on the GN_2 itself. A Millipore high-pressure holder equipped with a 0.45-micron, white, gridded membrane is plumbed to the system and to a flowrator to sample 10 cubic feet of gas at full system pressure, if possible. Sometimes flow must be throttled by means of a needle valve upstream of the holder. The procedure is in the test procedure. No restricting orifices are used. Moisture content is determined by means of the Beckman electrolytic hygrometer, which is soft plumbed to the system. Helium is sampled in a manner identical to that used for sampling GN_2.

LN_2, MMH, and GH_2 are not sampled.

No automated monitoring equipment is in use except the hygrometer.

25. Survey at The Boeing Company, Aerospace Division, Seattle, Washington

Ralph F. Peak, Research Engineer, Ordnance Engineering

Donald E. Flaherty, Engineer, Research & Engineering Support Division, Quality Control

James White, Engineer, Research & Engineering Support Division, Quality Control

There is very little Saturn V work performed at the Seattle plant. Almost all of it is controlled from the Michoud Plant. Some sampling of LH_2 and LN_2 is performed at their Tulalip, Washington, test site.

There are no written procedures for sampling or analysis. Both are stipulated as to frequency and method by the test engineers.

N_2O_4 is normally sampled in 500-ml Erlenmeyer flasks set in a bucket of ice. The flask is fitted with a ground-glass stopper. A-50 is sampled from 55-gal. drums by a siphon tube or by pressurization of the drum. The fluid is discharged into 500-ml Erlenmeyer flasks with ground-glass stoppers. Both fluids are analyzed to the military specification requirements.

For all fluids, samples for particle content are obtained by means of the high-pressure Millipore membrane holder equipped with the 10-micron, black, gridded, solvent resistant membrane. A flow meter is used downstream of the membrane for gas sampling and the sampling flow rate is less than operational. Hydrocarbon content in gases is determined by a method in which the gas is scrubbed by $CC\ell_4$, the $CC\ell_4$ is evaporated to dryness on a water bath, pure $CC\ell_4$ is added to the residue, and the mixture is analyzed in a 10-cm gas cell of a Beckman IR-5 or IR-9 infrared analyzer.

The Coulter counter has been tried and found inadequate for determination of system particle contaminants. It performs well for particles of unvarying size, such as pollens.

26. Survey at Douglas Aircraft Co, Inc, Santa Monica, California

Howard H. Spieth, Head, Analytical Chemistry Section

R. D. Scott, Hydraulic Fluids, Chemical Processing

Morey M. Calvert, Process Chemistry

No routine requirement exists for sampling at time of delivery for any of the fluids of interest. The vendor's certification that the fluids meet the requirements of the military specifications is accepted, and occasional spot checks are performed.

For LO_2, only purity samples are taken. The systems are not sampled for particle content. The Cosmodyne or the Douglas cryogenic sampler is used, and hydrocarbon content is determined by means of infrared absorption spectrophotometry using a 10-meter gas cell pressurized to 150 psi. A 500-ml sample is taken in a clean beaker and evaporated to dryness, after which the residue is taken up in solvent for total filterable solids and nonvolatile residue determinations. For the Thor program a sample is taken from the storage tank every 30 days to determine conformance to the military specification requirements.

LH_2 is not sampled. Occasionally the ullage gases of a storage tank that has been warmed to ambient are analyzed for informational purposes. Information from these analyses is not available.

Only density determinations are routinely made for RP-1. For the Thor program a sample is taken from the storage tank every 30 days to determine conformance to the military specification requirements.

N_2O_4 is analyzed to the military specification requirements. No sampling for particle content is performed. Very little N_2O_4 is used.

A-50 is not used.

GO_2 is not used.

GN_2 is analyzed for volatile hydrocarbons by means of infrared absorption spectrophotometry using the 10-meter cell, as for LO_2. The nonvolatile hydrocarbons are determined by the crushed

firebrick tube method. No sampling of the gas for particle content is performed unless the system is broken into. A Beckman electrolytic hygrometer or a CEC moisture monitor is used for moisture determination.

Helium is sampled by means of Hoke bombs. Impurities are determined by mass spectrograph and purity by difference. Military specification requirements are not being adhered to. Instead, the requirement is 99.95% purity. The bombs are evacuated and then filled with argon. Determination of the argon content in the sample by means of a mass spectrometer indicates how well the bomb was purged.

MMH is analyzed in accordance with the military specification requirements. It is sampled in glass bottles.

GH_2 is not used.

LN_2 is not used as an operational fluid, but is occasionally sampled for conformance to the military specification requirements as for LO_2, since it is used for conversion.

These gentlemen do not believe it is important what particle characteristic is used for definition since none of them provide more than relative data. They believe that projected cross sectional area would be quite acceptable. They do not see the necessity of microscopic backup for reliable particle counters, except for qualitative data. No automatic monitoring equipment other than the moisture monitors are used, and isokinetic sampling is not used in any form. Simple side taps only are used. Flame ionization methods are considered to be quite acceptable for the determination of volatile hydrocarbons but not for ambient-condensable hydrocarbons (nonvolatile), which exist as aerosols in the sample stream, because these instruments simply do not detect the latter. The Air Products methods of catalytic combustion followed by CO_2 determination, which detects all hydrocarbons, is considered to be superior. It is believed that hydrocarbons plate out on systems lines and that some of the latter actually act as partition chromatographs in that pure components are evolved on a differential velocity basis. It is considered quite necessary to remove a segment of the system periodically, solvent-flush it, and perform IR analysis of the extraction to determine hydrocarbon buildup.

Representative sampling of frozen impurities in cryogens is considered to be a serious problem, and dynamic sampling of the agitated storage tank contents is considered necessary to provide any probability of representation.

27. Survey at North American Aviation, S&ID Division, Downey, California

Robert D. Wesley, Supervisor, Applied Chemistry Group, Quality Assurance Laboratory

Robert LaSalle, Supervisor, Contamination Control, Chemical Process Department

Samples of LO_2 for purity are taken by means of the Cosmodyne cryogenic sampler. Total filterable solids determination is made from a 5-liter sample in a dewar in accordance with the method of MIL-P-25508D. No particle size or count determination is made except for LO_2 that must meet the requirements of grade A of MB0110-001.

LO_2 trucks from the Santa Susana test site and storage tanks are sampled every 6 months. A decreasing frequency sampling plan, applied to sampling of LO_2 at time of delivery, provides for sampling every eighth lot until a failure occurs. Additional samples are taken before firing. All sampling is performed from a simple side-tap without agitation of the tank contents. A gas chromatograph is used for the determination of purity. Hydrocarbon content is determined by means of an infrared analyzer. Sampling is described in MOO XXX-XXX (proposed). The Orsat gas analyzer is also used quite often for oxygen purity analysis.

Methods for sampling and analysis of LH_2 are the same as for LO_2. MB0110-003 contains the criteria, and MQ0501-027 contains the sampling and analysis methods.

RP-1 is not used.

N_2O_4 is sampled by means of the Cosmodyne RPS 500-OX (P/N 2701200-5) sampler, whose operation is described in MQ0501-023. Requirements are those of MIL-P-26539A. Normally, only total filterable solids are determined for particle content.

A-50 is used in the primary propulsion system of the command and service modules of the Apollo spacecraft. No operational fluid samples are taken. Every eighth procurement lot is sampled and analyzed to the requirements of MIL-P-27402C using the Cosmodyne Model RPS 500-F, P/N 2701200-7 sampler as described in MQ0501-022.

MMH is sampled identically to A-50 and is analyzed to the criteria of MIL-P-27404. It is used in the attitude control systems of the Apollo spacecraft.

GO_2 is plumbed directly to the analyzing instrumentation since it is procured in K bottles that are brought to the laboratory for testing. Moisture, odor, and carbon-bearing gases are determined according to the requirements of one of the three types used -- Breathing (MIL-O-21739), Industrial (BB-O-925), or NAA (MB-110001). An infrared spectrophotometer is used for hydrocarbon and acetylene determinations. A gas chromatograph is used for identification if the hydrocarbon content exceeds 25 ppm. Total filterable solids are determined for particle content; no size or count is made.

GN_2 and LN_2 are sampled in accordance with the requirements of MB0110-002 and MIL-P-27401. GN_2 is sampled identically to GO_2, and LN_2 is sampled identically to LO_2. MQO XXX-XXX (proposed) describes the sampling procedure for the liquid. Hydrocarbon content is determined by infrared, O_2 by gas chromatography, and moisture by electrolytic hygrometer.

The total filterable solids requirement applies only to the fluids governed by military specifications. No particle size or count is taken. This conflicts with MB0110-002. Concerning this statement, the following comment was submitted by North American Aviation, Inc: "Type II Grade A nitrogen is being used in only one location in our facility and we have been monitoring this system rather than the LN_2 for particulate contamination. However, as your team points out, this does conflict with the intent of MB0110-002 and therefore we have also begun to submit samples of the as-received material for particle sizing and counting."

Helium is sampled to the requirements of MB0110-007 or MIL-P-27407 again by taking the procured K bottles to the laboratory and plumbing them directly to the infrared analyzer for determination of hydrocarbons, to the gas chromatograph for O_2, N_2 and argon, and to the moisture monitor for moisture. No particle determinations are made.

The majority of the hydrogen received is in the liquid form and is sampled as such. Occasionally, K bottles of gaseous hydrogen are received for test. These are sampled in the same manner as the other gases and are tested to the requirements of the MB0110-003 specification.

Mr. LaSalle favors cross sectional area over longest dimension for particle definition, but only when automatic methods of counting are considered. He believes that microscopic backup is desirable for qualitative data. They prepare their own gas standards and have used standard gases from Olin Mathieson and Air Reduction (not commercially available); however, they find they can achieve better precision of analysis by using a large number of their own standards rather than a few so-called absolute standards.

28. Survey at Jet Propulsion Laboratories, California Institute of Technology, Pasadena, California

Thomas Groudle, Test Engineer, Propulsion Division, Combustion Devices Group

N_2O_4 and hydrazine are used here. No operational sampling is performed. Pan American supplies the propellants used at Cape Kennedy.

Hydrazine is procured to the military specification criteria for Ranger, Surveyor, and Mariner, with the requirement that there be no particles larger than 50 microns. Purity (99.8%), aniline content, and water are all determined by wet chemistry methods. Pan American performs the sampling at the storage area.

N_2O_4 is procured to the military specification criteria with the additional requirement that there be no particles larger than 500 microns. All analytical methods are by wet chemistry.

Both hydrazine and N_2O_4 are procured in bottle or drum quantities and are sampled in bottles. GN_2 is supplied by Pan American to military specification criteria.

29. Survey at Edwards AFB Rocket Propulsion Laboratory

Robert Biggers

There are two good methods of automatically determining moisture in RP-1. The Millipore Micro-Scan has been used successfully by the commercial airlines for water in jet fuels. A cloud point determination device manufactured by Hallikainan has not been widely used but can perform the required analysis. Strategic Air Command experience with the CEC detectors used with the FPU units has not been good.

For moisture determination in gases, the electrolytic hygrometer is recommended with a rhodium electrode for H_2 and a platinum electrode for all other gases. With regard to the determination of particle content in liquids, a Casella counter has been used for direct counting of particles retained on a membrane filter. The Casella is made in England and there are very few in this country. It has been modified to use American-made electronic vacuum tubes, but maintenance continues to be a problem. It takes 20 min to do a complete count of a 25-mm membrane using four counting channels with one additional check channel. They have had good success using it for the sizing of nearly monosized powders such as aluminum dust; therefore, it may be a good research or process control tool, but it doesn't work well for heterogeneous, naturally occurring, particle aggregates from fluid systems. It moves the membrane rather than the scanning spot as in an orthicon tube.

A Coulter counter has also been used for measurement of particles in fluids. Tube trailers of high-pressure gases are sampled for particles, moisture, and purity as called out in the applicable technical order. These trailers may contain pressure to 10,000 psi as they are pressurized at Edwards. Particles are sampled using a hand regulator that reduces the pressure to 1500 psi, thence through a high-pressure Millipore membrane holder into a 5-liter stainless steel closed tank. Flow is not measured. Differential pressure across the membrane is not significant since the hand loader is regulated from 0 to 1500 psig over approximately a 3-min period. It is agreed that particle fractionation occurs at the orifice of the regulator. This is one of the lesser problems associated with this method as far as Mr. Biggers is concerned. He agrees that this is not representative of the particle content of the tube trailer. A possible solution is to employ a Royco particle-in-gas counter. This instrument could only monitor gases that are being transferred from one container to another. Mr. Biggers does not know of any method that is practical and is representative.

For particle sampling of cryogenic fluids a membrane holder with a 1.5-micron membrane attached to a 5-liter dewar is used. This was developed and is used by the Linde Company. Cosmodyne samplers are used for purity samples. These samplers are not interchanged between cyrogenic fluids because it is too difficult to purge them of residuals of the last fluid sampled. A blanket pressure of 2 to 5 psig is maintained on the samplers with the gas from the previous sample unless analysis indicates nonconformance to requirements, in which case the sampler is cleaned. Any new stainless steel sampling container is cycled about 10 times without analysis, using normal sampling procedures before accurate purity determinations may be made. This is especially true of hydrogen. Apparently this is due to adsorption of the contents by the walls of the container. Consequently, no container is used for more than one specific fluid.

The impossiblity of representative sampling of frozen impurities in cryogenic fluid storage tanks was discussed. The best example of this is given in SSD-TDR-62-8, "Study of Liquid Oxygen Contamination," Contract AF33(616)-6370, May 1961. A warmup and evacuation of cryogenic tanks is recommended at least biannually. This would apply to tanks that use a common outlet for fill and drain.

No procurement sampling is performed on fluids received at Edwards that carry a certificate of analysis. An exception is RP-1 where visible moisture and particulate content is used as a check on vendor transporters. This is accomplished by parking the truck trailer on a 15-deg slope in back of the laboratory and taking a 2-liter sample from the downhill drain into a pharmaceutical graduate of the inverted cone configuration. If any water or particulate matter is noted, 5 gal. are flushed and the sampling repeated. If the water or particulate matter appears the second time, the load is rejected. This procedure is not intended to check the dryness of the RP-1 as supplied by the manufacturer; the certification to the military specification requirements by the manufacturer is sufficient. Rather it recognizes that the vendor transports are used to haul everything from molasses to dairy products in addition to rocket fuels, and the steam cleaning between these loads sometimes leaves water in the trailers. The sampling, therefore, is a check on the transporter, not the manufacturing compounder.

The vendor's certification of compliance signed by the Government inspector is accepted in every case for all fluids.

All sampling and sampler maintenance is performed by the Air Force in strict accordance with the applicable procedures as defined in the following technical orders:

1) Helium - T042B7-3-1-2;

2) Nitrogen - T042B7-3-1-1;

3) N_2O_4 - T042B7-2-1-3;

4) Oxygen - T042B6-1-1;

5) RP-1 - T042B7-2-1-2;

6) A-50 - T042B7-2-1-4.

These technical orders also indicate the purity use-limits of the fluids. The actual method of analytical testing may vary from the field type of equipment specified in the technical order. If more reliable and accurate results are obtainable through the use of sophisticated instrumentation, this test will be used in lieu of that called out by the technical order.

Sampling personnel are trained by an informal program conducted by the Propellant Laboratory. The frequency and duration of this training program varies as the need requires.

Mr. Biggers recommends that rapid-scan IR, gas chromatography, and possibly radio frequency absorption be investigated for their applicability to on-stream analysis.

30. Survey at Rocketdyne, Canoga Park, California

Dr. B. L. Tuffly, Group Scientist, Analytical Chemistry Branch, Research Department

Military specifications are used exclusively for all fluids, and particle criteria from Specification RA 0610-003 are used for space-engine operations. Methods described in the military specifications are also used for analysis because of contractual obligations, but these are often supplemented with instrumental methods for backup purposes. No automated monitoring apparatus is used on-stream by Rocketdyne. The Materials Laboratory performs particle counts. A chromatographic procedure is always performed on MMH for ammonia and various amine impurities.

A visual (colorimetric) method is used for the detection of excess NO in N_2O_4 in addition to the analysis required by the military specification. This method will be in the new CPIA handbook.

Rocketdyne has been conducting a program with the Rocket Propulsion Laboratory at Edwards Air Force Base for the determination of ortho/para ratio, O_2, and N_2 in LH_2 by gas chromatography. LO_2, GO_2, RP-1, helium, and A-50 are analyzed in accordance with the military specifications. In addition, supplemental gas chromatographic methods are used for the analysis of helium and A-50. Supplemental infrared and mass spectrographic methods are also employed in the analysis of GN_2 and helium.

Dr. Tuffly believes that accurate moisture determinations cannot be made from bomb samples.

LO_2, LH_2, and LN_2 are sampled by means of the Cosmodyne 4.4-liter cryogenic samplers. N_2O_4 is sampled in accordance with the military specification procedure by means of the double-valved Hoke cylinder. This has proven very satisfactory. The assay held on N_2O_4 is 99.5% with 0.1% maximum water for operational use. Extreme precautions must be taken in sampling N_2O_4 because of its hygroscopic nature. This has caused much trouble at Rocketdyne.

MMH is no problem to sample; in fact it can be sampled to the criteria requirements in open containers. A-50 sampling is straightforward, as is RP-1. All three can be taken in glass bottles, but Hoke cylinders are preferred for the first two, for safety considerations only.

No samples of GH_2 are taken. Helium is sampled in Hoke cylinders, as is GN_2. A nuclear magnetic resonance (NMR) method for water in N_2O_4 is published in the proceedings of the latest ACS meeting in Detroit, 4 thru 9 April 1965. Rocketdyne has also been using the EPR (Electronic Paramagnetic Resonance) equipment for propellant analysis.

31. Survey at Rocketdyne, Santa Susana Test Facility, Santa Susana, California

Robert E. Fenton, Supervisor, Test Systems Unit

Edward McNally, Test Engineer

James Small, Supervisor, Quality Assurance

This group has, among many other functions, the responsibility for all sampling performed at the test facility. Sampling equipment and procedures are described in Rocketdyne Document FL11-5-1072, "SSFL Sampling Instruction," Rev 1, May 1965.

LN_2 and LO_2 are sampled by means of the Cosmodyne cryogenic sampler or in the Rocketdyne remotely operated flanged dewar sampler to the requirements of the military specifications. The remotely operated dewar is used for LO_2 and LN_2 sampling during engine operation only. Particulate levels obtained with this sampler and the Cosmodyne sampler are not considered representative of the level of fluid particulate contamination. Therefore these samplers are not used for particle sampling.

The Rocketdyne remotely operated flanged dewar sampler (DT136118) has an LN_2 bath to preserve the sample. It is used for special studies in sampling for particulate contamination, and sampling operations performed in accordance with the military specification.

There are no particle size and count criteria for LO_2 or LN_2 in operational systems, because military specifications do not establish a level. However, particle content is evaluated on a quantitative basis, but the allowable level is determined for each individual situation.

The Cosmodyne cryogenic sampler with insulated components is used for taking samples of LH_2. This method is not fully developed, but samples have now been obtained that exceed MIL-P-27201A requirements. A liquid-gas discriminator is used on the sampler outlet to indicate liquid flow. This Rocketdyne development is essentially a hydrogen-filled gas-bulb thermometer. Samples are analyzed for purity and ortho/para balance. There are no particle criteria and no total solids criterion.

RP-1 is sampled in an open polyethylene bottle or by the Rocketdyne remote sampler (CT136108). The samples are analyzed to the requirements of the military specification. Samples are examined visually for particles. There is no routine sampling requirement. All samples are spot checks.

A flanged steel sample bottle adapted for N_2O_4 is used to obtain N_2O_4 samples. A polyethylene bottle is used for waste after filtering. The polyethylene bottle is degraded by the N_2O_4 but lasts for an acceptable number of samples. The flanged bottle sampler is used in conjunction with the Rocketdyne N_2O_4 panel (DT136113). The panel provides purging capability, visual flow indication, and a water-driven aspirator for additional pressure differential and fume control.

The model specification requires the taking of samples of operational fluids that must meet the particle requirements defined by Class 4 of RA0615-003 in addition to military specification requirements. Samples are taken at least every 7 days and each time the system is broken into.

A-50 and MMH are sampled by the same method as N_2O_4, but the requirements of the military specification can be met with open-container sampling.

GN_2, helium, GH_2, and GO_2 are sampled by a Rocketdyne gas sampler DT136111 or a Hoke gas sampler ICC-3E1800.

All samplers must have less than 100 microns absolute pressure in them before sampling.

When sampling of gases for particle content is required, the high-pressure Millipore membrane holder is used.

32. Survey at Rocketdyne, Canoga Park, California

Fred Shuler, Materials and Processes Engineering

Wayne A. Taggart, Materials and Processes Engineering

Moisture content is determined from bomb samples by means of a CEC moisture monitor in the laboratory. The moisture monitor is continuously purged when not being used. Rocketdyne Specification RA0610-003 contains the criteria levels for space-engine operations. Fixed gases are analyzed on a Beckman GC-2A.

The Royco 300 particle counter has been used for on-stream monitoring of Freon and hydraulic fluid, and the batch-type unit is being evaluated for bottle samples.

The HIAC unit has been found to be unsuitable for Freon, and the Coulter counter is also unadaptable. The chromatograph is considered by this group to be the most versatile tool for the hydrazines and gases. Rocketdyne does not routinely use isokinetic sampling for particles.

33. Survey at General Dynamics, Convair and Sycamore Canyon Test Facilities

Earl G. Smith, Assistant Supervisor of Process Control

Donald Krosch, Senior Group Leader, Contamination Control

Mas C. Miyaji, Materials and Processes Test Service Department

Donald G. Treadway, Materials and Processes Test Service Department

AFBS Exhibit 61-3C, Paragraph 5, "Criteria for Control of Propellants and Service Gases," contains both the basic criteria applicable to LO_2, LN_2, GO_2, GN_2, helium, and RP-1 and the sampling requirements for them.

Samples of LO_2 and LN_2 for particle determinations are taken in a modified Stanley stainless steel vacuum-jacketed bottle with a Hoke bellows seal valve installed in the vacuum jacket so the vacuum may be broken. In addition a new screw top has been made with influent and vent fittings so the bottle may be plumbed to the tank or system for sampling, thus minimizing extraneous contamination. The vacuum bottle is returned to the laboratory where the vacuum is destroyed, the cryogen boiled off, and the particle matter rinsed from the bottle by petroleum ether to a standard laboratory Millipore filter. It is tested for total filterable solids only (2.5 mg/liter max). Only static samples are taken. The Cosmodyne cryogenic sampler is used to obtain samples for purity and total hydrocarbon determinations in both cryogens. Moisture is not determined. Convair has performed a program of evaluation of the validity of moisture determination in cryogens by vaporization of an aliquot and has obtained very poor repeatability and very poor accuracy when known amounts of moisture were added to the cryogen. The supplier's certification of moisture content is accepted.

No distinction is made between volatile and nonvolatile hydrocarbon. Total hydrocarbons are determined by means of a Perkin-Elmer IR-21 infrared analyzer equipped with a 10-meter gas cell, at 10 atmospheres. Only one evacuation and one filling of the cell are used. A CEC-21-140 mass spectrometer is used for purity determination. The samplers are cleaned between sampling operations only as required by preceding fluid analysis.

For GN_2, GO_2, and helium, a 1-gal., double-valved Hoke bottle is used for hydrocarbon and purity samples. These samples are taken at 500 to 550 psi, and regulators are used as necessary. Purity and hydrocarbon content are determined by the same procedure as for the cryogens. Either a CEC moisture monitor or an Alnor dew pointer is used at the sampling point to determine moisture. The standard Millipore high-pressure membrane holder equipped with a black, 1.2-micron membrane is used for particle content at the sampling point. No restrictive orifice is used. The sample is taken at the system pressure by slowly opening the inlet valve. Occasionally a membrane is lost, and the new nylon membranes are being considered because they offer more strength.

Mr. Miyaji believes that isokinetic probe sampling under turbulent flow conditions would be ideal for obtaining representative particle samples from gases. (Concerning this statement, the following comment was submitted by General Dynamics/Convair: "With respect to sampling solid contaminants from system gas, the point we desire to make is that a representative gas sample is taken at the actual operating flow conditions, e.g., flow rate and pressure. In this manner, the sample represents the gas flowing to the system in the use condition. So, the statement that isokinetic probe sampling under turbulent flow conditions is ideal for obtaining representative particle samples from gases is only accurate as far as a turbulent system is concerned. A nonturbulent flow system likewise requires probe sampling under nonturbulent flow conditions.")

These gentlemen agreed that changing the particle definition parameter from the longest dimension to an area or volume parameter would be a good step, but Mr. Smith stated that whatever criteria are adopted, they should be oriented to the needs of the system.

The Materials and Process Test Service Laboratory has experienced very good accuracy and reproducibility (±10%) with microscopic counting of prepared standard particle slides between

microscopists using the Decontamination, Inc, numbered grid membranes. With the statistical counting of randomly selected grid squares as described in ARP 598, the reproducibility is very much less (±30 to ±100%).

RP-1 is routinely accepted on the basis of the supplier's certification that it meets the requirements of the military specification. Particle content determinations are performed on the system, but only total filterable solids are determined. Bacteria problems have been experienced with RP-1 where it has been exposed to humid environments.

LH_2 is not sampled or analyzed by Convair. An extensive program of sampling and analysis was prepared several years ago but has not been implemented, presumably because of safety considerations. An occasional particle sample has been taken in the modified Stanley bottle.

34. Survey at NASA-WSTF, Lockheed Electronics Company

Harold Glicken, Supervisor, Contamination Control Laboratory

Wilbur E. Mountain, Engineer-in-Charge, Contamination Control Laboratory

Irwin Smith (NASA), Technical Monitor, M&P Laboratory

N_2O_4 and A-50 are sampled in 3-liter, double-valved 3A1800 Hoke bottles, equipped with a high-pressure Millipore membrane holder that contains a 0.45-micron, black, gridded, Type OS membrane, plumbed to the bottle inlet port. The unit is completely disassembled, cleaned, and reassembled after the taking of a sample. The assembly is carried in an aluminum frame that maintains the bottle in a horizontal position during the filling operation to provide ullage space.

For sampling of gases, a 4-liter, double-valved 3A5000 Hoke bottle is used with or without a membrane holder depending on the contractor's requirements.

For sampling of cryogens, the Cosmodyne cryogenic samplers are used. LH_2 is sampled by means of a specially constructed vacuum-jacketed Cosmodyne cryogenic sampler. Its Cosmodyne designation is CS-4.4 HB.

Pressurants and gasified cryogens are analyzed on a Perkin-Elmer Model 800 gas chromatograph, and on the following Beckman instruments: GC-2A and GC-4 gas chromatographs, IR-12 infrared spectrophotometer, 109A hydrocarbon analyzer, and an electrolytic hygrometer. The sample container is connected to a manifold, to which all the instruments are also connected, so the required analysis can be performed with a minimum of effort.

The determination of total filterable solids in cryogens is made by flowing the sample through a Millipore membrane holder into a dewar calibrated to contain 5 liters. No particle size or count is determined. The laboratory has received 10 liquid-to-gas vaporizers built by Cryenco, Denver, Colorado. These will be used for sampling the fuel cell LO_2 and LH_2 for purity. No determination of particle content is contemplated.

The system used Snap-Tite SVEC 4-4 (B) and SVEN 4-4 (B) quick disconnects, Anderson Greenwood HIVS-2 valves with unplasticized Kel-F seals and Drilube 819 lubricant, and a Hoke Saf-Tee cylinder adapter relief valve S3010A. A flow-through K bottle will be used as the sample receiver. The LO_2 system and the LH_2 system will each use five of these. Moisture determinations will be made from the K bottles after they are delivered to the laboratory.

During discussion of this somewhat controversial procedure, Mr. Smith said that he was aware of the adsorption problems associated with the method but felt that the flow-through feature of the K bottle would compensate for this by producing an equilibrium condition before sample entrapment. The K bottle will be a standard mild-steel unit with both ports at one end but with tubing extending from one port to the bottom of the cylinder.

Mr. Smith feels that automation of contaminant analysis at the point of sampling would greatly benefit the aerospace program but that these provisions must always include mechanical sampling ports to provide backup laboratory analysis as a check on the monitors. He believes that projected cross sectional area is preferable, as a particle criterion, to the longest dimension, and that the zone-sensing devices are therefore pertinent to the control program.

35. Survey at NASA-WSTF, Grumman Aircraft Engineering Company

John Dickinson, Superintendent, Manufacturing

William A. Perigard, Quality Assurance

Grumman tests the main propulsion systems of the LEM ascent and descent stages at White Sands. A-50, N_2O_4, GN_2, and helium are used operationally and the criteria for them are contained in LSP-270-0001A. The supplied fluid requirements are contained in Table II and the operational fluid requirements are contained in Table III of this document. The analytical test results obtained to date show that is has not been possible to meet the Table III particle requirements at this facility. AVO No. LAV-270-20038, dated 22 October 1965, establishes new levels that can more probably be attained. Data will be collected over the next 4-month period to determine to what extent, if at all, the supplied and operational fluid criteria in LSP-270-0001A will be modified. These criteria will directly affect the instrumentation to be recommended for use at the Cape to monitor the fluids supplied to LEM.

AVO No. LAV 89-27, dated 19 October 1965, describes a method of sampling gases for particle content that will be used until sufficient information can be accumulated to establish a realistic background count for the membranes. This method involves the use of three membrane holders, plumbed in series for sampling. The count obtained from the two downstream membranes will be averaged to provide a background number, which will be subtracted from the count obtained on the upstream membrane to give the sample count. LSP 82-002A describes the sampling of hypergolic propellants. AVO LAV 270-20019, dated 9 September 1965, gives a very comprehensive account of the philosophy and applicability of sampling and analysis to the LEM requirements.

36. Survey at NASA-WSTF, Zia Company, White Sands Operations

Jay E. Ort, Technical Adviser to Assistant Manager, Maintenance and Operations

George A. Alvarez, Assistant Superintendent, Cryogenics and Propellants

Billy Ray Waffle, Cryogenics and Propellants Foreman

The Zia Company procures and delivers the operational fluids used in the testing and developmental programs at NASA-WSTF. They perform all sampling of fluids at the time they are received as well as at the point of delivery to the program contractor's system.

Fluid requirements for the programs are defined by NASA-MSC. The analyses are performed by the contamination control laboratory.

Their sampling methods agree, in essence, with those already described for other contractors.

37. Survey at NASA-WSTF, North American Aviation

George D. Swearingen, Apollo Test and Operations

Since operational fluids had not yet been used in the fluid systems at this facility, no data on operational history had been accumulated.

OCP-S-4207A-F2/001, "Propulsion System Field Site Propellant Sampling (Aerozine-50 and Nitrogen Tetroxide)," dated 13 July 1965, OCP-S-9308-SC001, "Field Site Cryogenic Sampling Cryogenic Systems (LO_2, LH_2, LN_2)," dated 29 June 1965, and NAA Specifications MB0110-001, 002, 003, and 007 for LO_2 and GO_2, LN_2 and GN_2, LH_2 and GH_2, and helium are the documents that describe the criteria and the sampling procedures for the operational fluids. The requirements of the MSFC specifications also apply to the cryogens and the military specifications requirements also apply to A-50 and N_2O_4. The equipment is cleaned to the requirements of MA0610-017.

38. Survey at Reaction Motors Division of the Thiokol Chemical Corporation, Denville, New Jersey

Joseph Mattolina, Director, Quality Division

William Buckman, Manager, Quality Assurance

Stephen Orban, Quality Engineer

Harry Burton, Manager, Test Division

GH_2 is not used as a test propellant but is used with H_2O_2 to generate steam to power the ejectors for the vacuum test chambers. It is not sampled. RP-1 is not used.

LO_2, LN_2, and helium are used but not sampled. They, together with all test and operational fluids, are procured with a certificate of compliance to the procurement specifications.

GO_2 and GN_2 are obtained by conversion from the cryogen and are therefore not sampled. The nitrogen oxides and amine fuels are sampled by means of the conventional stainless steel pressure bottles and are analyzed for chemical purity and particle content.

No monitoring equipment of any sort is used at RMD. RMD's philosophy in this regard is that the systems are provided with adequate filters, are maintained clean, and only clean fluids are admitted to them. Therefore, they assume that contaminants are not likely to occur. Mr. Buckman believes that, in certain very small propulsion systems with fine orifices and tortuous flow passages, fibrous particles may be more dangerous than those of equivalent cross sectional area or volume but of more cubic or spheroidal configuration. However, he believes that, for the types of systems pertinent to this study, any parameter more closely related to volume, e.g., cross sectional area, would be preferable to, or as applicable as, the longest particle dimension for detecting the hazard associated with particulates.

B. SURVEY OF MANUFACTURERS OF INSTRUMENTATION AND SAMPLING EQUIPMENT

The survey of manufacturers of instrumentation and sampling equipment was begun immediately after the presentation of the midway report.

To obtain complete information concerning the instrumentation and sampling equipment readily available, possible modifications to existing equipment, and possible futuristic ideas, the Survey and Evaluation team was required to visit a relatively complete representation of manufacturers of these items. Thirty-five such organizations were visited. The equipment and philosophies of these organizations are believed to present the most complete composite available at the present time. Although the organizations visited do not represent the total number of such organizations existing in the United States today, economic and time considerations dictated that not all organizations could be contacted. Every effort was made to cover the entire field of sampling and monitoring equipment and to ascertain that no significant procedure or method was overlooked.

Most manufacturers received an inquiry letter before the visit asking their cooperation in this study. Briefly, the letter outlined the program objectives, listed the fluids of interest, and included the provision that any undertaking by a manufacturer would be done without cost or obligation to NASA, the United States Government, or Martin Marietta Corp, and that any information given to Martin could be presented gratis to NASA. The organizations who did not receive the inquiry letter were contacted by telephone for permission to visit and were provided a copy of the letter at the time of visit.

At the time of visit, the requirements and the scope of the entire Contamination Sensors program were discussed in detail with the appropriate representatives of each organization. Each organization was given copies of all pertinent information needed for proper evaluation of the program and for assessment of the organization's ability to contribute information to the program.

The organizations visited were asked to submit a proposal (without cost or obligation to NASA or Martin) outlining their approach to the solving of the many problems associated with this program. This proposal was to contain information concerning the size, weight, cost, portability, accuracy, repeatability, sensitivity, electrical requirements, and time required for complete analysis for equipment that was readily available. They were also asked to consider the possibility of modifications to existing equipment to make it capable of performing the required tasks. Further, they were asked to consider techniques that are not presently used in any known equipment. The only limit imposed on these futuristic ideas was that they must be directly related to good scientific principles.

The companies visited during this survey are:

1) Industrial Instruments Inc, Cedar Grove, New Jersey; Dr. Robert Rosenthal, Chief Chemist;

2) Gow-Mac Instrument Company, Madison, New Jersey; James McFadden, President; A. E. Lawson, Jr, Vice President; John D. Carswell, Jr, Chief Engineer.

3) The Perkin-Elmer Corporation, Electro-Optical Division, Norwalk, Connecticut, and South Wilton Research Laboratories, South Wilton, Connecticut; Wayne S. Paige, Manager of Radiometric and Analytical Instruments Section; Louis A. Nigro, Marketing Representative; Frank Briscoe, Analytical Instruments Engineer;

4) The Millipore Filter Corporation, Bedford, Massachusetts; Walter Kenyon, Vice President; Paul A. Looney, Manager, Fuel Division; Peter A. Reiman, Sampling Development Engineer;

5) Baird Atomic Corporation, Cambridge, Massachusetts; William G. Elliott, Research Engineer;

6) Jarrell Ash Company, Waltham, Massachusetts; John A. Norris, Assistant Director of Research; Fredrick Brech, Vice President and Director of Research;

7) Block Engineering Inc, Cambridge, Massachusetts; Dr. Myron Block, President;

8) Sperry Products Division of Automation Industries Inc Danbury Connecticut; Philip R. Nute, Product Sales Manager, Ultrasonics; Andrew Murdock, Applications Engineer;

9) Airco Welding Products Division, Air Reduction Company, Inc, Union, New Jersey; Harry D. Mann, Manager. O.E.M. Sales;

10) Hoffman Laboratories Division of Air Reduction Company, Newark, New Jersey; James L. Perry, Product Development Manager;

11) Air Reduction Company, Inc, Central Research Laboratories, Murray Hill, New Jersey; Dr. E. R. Blanchard, Director, Industrial Gases and Cryogenics Research Division;

12) Warner-Chilcott Laboratories, Instruments Division, Morris Plains, New Jersey; Daniel Trumbetta, Manager of Sales Service, Technical Educational and Investigation;

13) Loenco, Inc, Altadena, California; Winston Loe, President; Richard W. Cole, West Coast Sales Engineer;

14) Paul Chemical Company, A Division of Air Reduction Company, Inc, Buena Park, California; Al J. San Miguel, Sales Engineer; S. Ken Hallworth, Sales Manager;

15) Beckman Instruments, Inc, Scientific and Process Instruments Division, Fullerton, California; John Burgess, Marketing, Advanced Technology Operations; Carl Neisser, Marketing Manager, A.T.O.; Mr. Jean Bordeaux, Project Engineer, A.T.O.; Paul E. Chase, Western Contracts Manager, A.T.O.; Richard Villalobos, Senior Applications Engineer; Don W. Stevens, Product Line Manager; Edwin A. Houser, Principal Application Engineer;

16) Contamination Control Corporation (Maledco Turbulent Flow Sampling Valves), Los Angeles, California; M. L. Fickle, President;

17) Consolidated Electrodynamics Corporation, a subsidiary of Bell and Howell Company, Analytical and Control Division, Monrovia, California; Harold F. Wiley, Vice President; Dr. Charles M. Judson, Director of Engineering; James A. Liontas, Regional Manager; Robert D. Enochs, Director of Marketing; Gordon W. Culp, Engineer; Charles Bicknell, Project Engineer; Robert Hoffman, Product Manager;

18) High Accuracy Products Corporation, Claremont, California; Leon D. Carver, President; Walt W. Wood, Electronics Engineer;

19) Cahn Instrument Company, Paramount, California; Lee Cahn, President; Pat Gaskins, Vice President; Earl Schwartz, Chicago Area Sales Representative; Jack Kelly, Chief Engineer;

20) The Cosmodyne Corporation, Torrance, California; Thomas A. David, Contract Administrator; Sam Phillips, Engineer;

21) Royco Instruments, Inc, Menlo Park, California; James Weersig, General Manager;

22) G. K. Turner Associates, Palo Alto, California; Dr. Phillips, Technical Director;

23) Hallikainan Instruments, Richmond, California; Mr. Hallikainan, President, E. F. Schimbor, Vice President;

24) Wyle Laboratories, El Segundo, California; Lee M. Mortenson, Manager, Research and Analysis;

25) Gaertner Scientific Corporation, Chicago, Illinois; E. Gordon Watson, Sales Engineer;

26) E. H. Sargent and Company, Chicago, Illinois; Paul Sherrick, Vice President, Engineering and Manufacturing; Garfield A. Dawe, Chief Engineer, Manufacturing Division; Richard Metkin, Technical Representative;

27) The Bendix Corporation, Cincinnati Division, Cincinnati, Ohio; Mr. Damoth, Chief Engineer; Richard W. Bonham, Applications Engineer; Elias Levine, Engineer;

28) The Gelman Instrument Company, Ann Arbor, Michigan; Charles Gelman, President; James M. Gamblin, Laboratory Products Manager;

29) Bausch and Lomb, Inc, Rochester, New York; Jack Diviney, Contract Administrator; John Keller, Engineer;

30) Barnes Engineering, Inc, Stamford, Connecticut; Stanley Polchlopek, Instruments Division;

31) Air Products and Chemicals, Inc, Allentown, Pennsylvania; Dr. George E. Schmauch, Section Manager, Contract Research, Research and Development;

32) Mine Safety Appliances Company, Pittsburgh, Pennsylvania; J. P. Sherwin, Sales Manager, Technical Products Division; V. J. Elliott, Product Line Manager, Technical Products Division;

33) Fisher Scientific Company, Pittsburgh, Pennsylvania; E. R. Bower, Vice President and General Manager;

34) American Instrument Company, Inc, Silver Spring, Maryland; Dr. C. D. Miller, Analytical Research and Instrument Development; Thomas J. Slone, Engineering Manager; J. R. Wagner, Engineer; Wm. C. Hampton, Project Engineer;

35) Melpar, Inc, Falls Church, Virginia; Lester D. Shubin, Senior Scientist, Physical and Analytical Chemistry Laboratory; Dr. Victor R. Huebner and Dr. H. deSchmertzing, Research.

III. SUMMARY OF DETERMINATION OF APPLICABLE CONTAMINATION CONTROL CRITERIA

A. PURITY/IMPURITY CRITERIA

Table III-1 outlines the fluid purity criteria for the fluids of interest and is a compilation of the following specifications:

1) MSFC-SPEC-234 - Nitrogen; Space Vehicle Grade (Type I Gaseous, Type II, Liquid);

2) MSFC-SPEC-364A - Helium;

3) MSFC-SPEC-399 - Oxygen (Type I Gaseous, Type II, Liquid);

4) MSFC-SPEC-356 - Hydrogen, Liquid;

5) MIL-P-27402 (USAF) - Hydrazine-uns-Dimethylhydrazine (50% N_2H_4 - 50% UDMH);*

6) MIL-P-27404 - Monomethylhydrazine;

7) MIL-P-26539A - Nitrogen Tetroxide;

8) MSFC-SPEC-342 - Rocket Fuel, RP-1.

B. PARTICLE CRITERIA

The particle criteria listed in Table III-2 were extracted from Appendix A, Media Specifications, from MSFC DWG 13M20097 for the Saturn IB, and from Appendix A, Media Specifications, from MSFC DWG 13M50099 for the Saturn V. These criteria are the most complete criteria available for this program. Correspondence from Mr. Hans G. Paul, Chief, Propulsion Division, Propulsion and Vehicle Engineering Laboratory, MSFC, dated 9 March 1966, indicates that additional particle criteria are forthcoming for all Saturn fluids and should be completed by 1 June 1966. Criteria for helium and nitrogen should be ready in preliminary form by 18 March 1966.

*Aerozine-50 (Abbreviated A-50 in this report).

Table III-1 Fluid Purity Criteria

Constituent	Fluid										
	Gaseous Nitrogen	Helium	Gaseous Oxygen (Grade C)	Gaseous Hydrogen	Liquid N_2, O_2, H_2	A-50	MMH	N_2O_4	RP-1	Gaseous Oxygen (Grade A)	Gaseous Oxygen (Grade B)
Oxygen	50 ppm	-	99 60%	-	Same requirement as gases	-	-	-	-	99.995%	99.6%
Total Hydrocarbons	5 ppm as methane	5 ppm as propane	50 ppm as methane		"	-	-	-	-	14.0 ppm as methane	29.0 ppm as methane
Moisture Content	11.5 ppm	9 ppm	3 ppm	9 ppm Total max	"	1.8% max by weight	2% by weight	0.1% by weight	-	-	-
Nitrogen	99.99%	14 ppm	-		"	-	-	-	-	3.0 ppm	3.0 ppm
Hydrogen	-	1 ppm	-	99.995%	"	-	-	-	-	-	-
N_2O_4	-	-	-	-	-	-	-	99.5% by weight min	-	-	-
N_2O	-	-	-	-	"	-	-	-	-	1.0 ppm	1.0 ppm
Chloride (as NOCℓ)	-	-	-	-	-	-	-	0.08% by weight	-	-	-
Helium	-	99.995%	-	39 ppm	"	-	-	-	-	-	-
O_2 + Argon	-	1 ppm	-	1 ppm	"	-	-	-	-	-	-
Total Impurities	100 ppm	50 ppm	-	50 ppm	"	-	-	-	-	-	-
Carbon-Bearing Gases	-	-	-	1 ppm	"	-	-	-	-	1.0 ppm	5.0 ppm CO 5.0 ppm CO_2
Hydrazine	-	-	-	-	-	51.0, ± 0.8% by weight	-	-	-	-	-
UDMH + Amines	-	-	-	-	-	47% min by weight	-	-	-	-	-
Monomethyl Hydrazine	-	-	-	-	-	-	98% min by weight	-	-	-	-
Existing Gum	-	-	-	-	-	-	-	-	7 mg/100 ml	-	-
Potential Gum	-	-	-	-	-	-	-	-	14 mg/100 ml	-	-
Sulphur	-	-	-	-	-	-	-	-	0.05% by weight	-	-
Mercaptan-Sulphur	-	-	-	-	-	-	-	-	0.005% by weight	-	-
Aromatics Olefins	-	-	-	-	-	-	-	-	5.0% 1.0%	-	-
Methane, Ethane	-	-	-	-	"	-	-	-	-	10 ppm methane 2 ppm ethane	25.0 ppm methane 2.0 ppm ethane
Propane and Higher Hydrocarbons	-	-	-	-	"	-	-	-	-	1 ppm	1 ppm
Alkyne and Acetylene Hydrocarbons	-	-	0.05 ppm as acetylene	-	"	-	-	-	-	0.05 ppm as acetylene	0 05 ppm as acetylene
Halogenated Hydrocarbons		-	-	-	"	-	-	-	-	1.0 ppm	1.0 ppm
All Other Impurities	-	-	-	-	"	-	-	-	-	30 ppm	-

Note: 1. Concentrations are based on volume except where indicated.
2. Purity values are minimums; impurity values are maximums.

Table III-2 Particle and TFS Criteria for Saturn IB and Saturn V

Fluid	Basic Specification	Total Filterable Solids Maximum	Solid Particles Maximum Allowable		Fibers Maximum Allowable	
			Size (μ)	Number	Size (μ)	Number
LO_2	MSFC-SPEC-399	1.0 mg/liter	<175 >175	No Limit None	<175 >175	No Limit None
LH_2	MSFC-SPEC-356	**	<175 >175	No Limit None	<175 >175	No Limit None
LN_2	MSFC-SPEC-234	**	**	**	**	**
MMH	MIL-P-27404	1.0 mg/liter (MIL-SPEC)	**	**	**	**
N_2O_4	MIL-P-26539A, Amendment 1	10.0 mg/liter (MIL-SPEC)	**	**	**	**
A-50	MIL-P-27402, Amendment 1	10.0 mg/liter (MIL-SPEC)	**	**	**	**
GO_2 GN_2	MSFC-SPEC-399 MSFC-SPEC-234	**	**	**	**	**
He	MSFC-SPEC-364A	0.01 mg/liter	<20 >20	No Limit None	<20 >20	No Limit None
GH_2	MSFC-SPEC-356	**	**	**	**	**
RP-1	MSFC-SPEC-342	**	10 to 25 26 to 50 51 to 100 >100 & Fibers*	6500 1600 300 40		

*A fiber is defined as any particle measuring over 100 μ in length and having a length-to-width ratio of 10 to 1, or higher; **No limit established.

IV. SAMPLING AND MONITORING POINT LOCATIONS

A. PHILOSOPHY FOR ESTABLISHING SAMPLING AND MONITORING POINTS

In attempting to establish the complete launch facility requirements for fluid sampling and contamination monitoring at Launch Complexes (LC) 34, 37, and 39, a number of sampling points have been proposed in the various fluid systems located at these complexes. The philosophy followed in the establishment of these sampling points is as follows:

1) Procurement sampling of the operational fluid while in the vendor container, at the point of delivery, or while in a bonded storage tank before delivery, will be considered adequate to establish the acceptability of the fluid for use in the NASA system.

2) All operational fluid sampling performed on the NASA system, therefore, will be designed to detect primarily those contaminants that are a degradation product of the operational fluid or which are system-generated both by proper and improper control of system conditions.

3) No sampling of the operational system upstream of the storage tanks is recommended unless the operational fluid is uniquely sensitive to contaminants that cannot be completely kept from the system (e.g., atmospheric gases in an LH_2 system).

4) Liquid storage tanks shall be sampled only while their contents are agitated by a recirculating sampling stream. The schematics offered, therefore, provide for pump-operated recirculation loops for each liquid storage tank that does not have one as part of its operational configuration. As an alternative, the tank contents can be agitated by bubbling the blanketing gas through the tank and taking a sample after homogenization.

   At the time of the midterm oral report, recommendations were offered for eductor-operated recirculation loops. However, considerations of the pressures existent at different points in the system indicate that the use of eductors is not feasible.

5) In general, two principal monitoring points, identified in Fig. IV-1 thru IV-16 by the letter "M," are recommended in each main fluid line downstream of the storage containers. One point is at the outlet into the transfer system (but downstream of storage-area filters), and the second as near to the airborne interface as is practicable. It is essential for a system to have one set of monitors in the storage area and one set of monitors at the Mobile Launcher (ML) area for purposes of system control. It is not desirable to have an individual monitor capable of stopping fluid flow if it sees a brief slug of contamination. Instead, both monitors should work together in this function. If the monitor located at the storage area sees a slug of contamination, it should not necessarily stop system flow because it is likely that this contamination will be severely diluted in the long run of line between the storage area and the vehicle. In fact, the monitor at the ML will probably not detect this contamination. On the other hand, if the monitor at the ML detects this contamination, but the storage area monitor has been sensing good quality fluid, the ML monitor should not be able to stop system flow. Flow should be stopped if both monitors are reading contamination at the same time or if the pad storage area monitor has been reading excessive contamination for an excessively long time period (30 sec or so).

6) In addition to the principal monitoring points, a number of sampling points are indicated on the figures. These are identified by the letter "S," or by the letters "SA" if an alternative point is proposed. It is not intended that these be used for continuous monitoring at all, but rather for the drawing of fluid samples before actual booster loading. The points would be used for checking system cleanliness and dryness during blowdown of the system or during other exercises in which sampling is necessary.

7) The philosophy of locating monitoring points as close to the airborne interface as possible requires some definition. Locating monitoring equipment at each ground/airborne interface for each fluid creates several problems. The principal one is that long lines (several hundred feet) would be required to conduct

the fluid sample to the monitoring instrument, or monitoring instrumentation would have to be located at each fluid ground/airborne interface. The latter approach does not appear practical because of the large number of such points. The former approach is not desirable because long sampling lines create a number of problems. The principal problems are adsorption of trace contaminants on the inside surface of the lines and the time lag involved in transport of the sample to the monitoring instrument. For this reason the principal monitoring point is located in the vicinity of the base of the ML. Alternative monitoring points, identified by the letters "MA" are indicated on the schematics.

8) The recommended monitoring points are based on the ultimate in reliability and on the assumption that some groups will be close enough that one analyzer will be shared by more than one monitoring point. Based on this concept, it is possible that some sampling points might actually become monitoring points in the ultimate design. In addition it might be possible to combine some optional monitoring points (indicated by the letter "MO") with recommended monitoring points. Finally, it may be possible to combine some of the alternative monitoring points to reduce their number. The final selection of the number and exact locations of monitoring points will depend on many factors, among which are the following:

   a) Relative costs of the possible combinations;

   b) Weight;

   c) Available locations and proximity to one another;

   d) Minimum modification to system;

   e) Length of sampling lines required;

   f) Length of time for switching;

   g) Ability to use flow sampling wedges for multiple flow rates and two-directional flow.

B. LOCATIONS OF SAMPLING POINTS

The proposed sampling points for the various fluid systems at LC 34, LC 37, and LC 39 are shown in Fig. IV-1 thru IV-16. NASA-furnished drawings were used in proposing these sampling points. Because of the complexity of systems of this type, and because the number of drawings required at these complexes is great and only a relatively small number of drawings could be obtained, the schematics may not be entirely complete. However, every effort was made to make them as exact as possible. Pinpointing the location of each sampling or monitoring point more precisely than has already been done is beyond the scope of this study. The key components in the system have been identified by drawing number to better identify their position in the system.

1. Lox System

LC 34 - The lox system schematic shown in Fig. IV-1 is typical of the storage and transfer system at LC 34. Lox, which has been sampled and has met procurement standards, is received in transport trailers and transferred from the trailers, by pressurization of the ullage space or by trailer-mounted pumps, to the main 125, 000-gal. lox storage dewar located approximately 700 to 800 ft from the launch pedestal.

Pump A390 will be used to circulate lox through valves A382 and A308 during or immediately after lox is transferred from the transport trailers. The circulated lox will be analyzed at monitoring point No. M1 to determine the properties of the lox in the dewar. Point M2 located in the lox storage area and downstream of filter A99 and pump A105 will be provided for lox analysis during the fast fill operation of the S-IB stage. Point M3, also located in the lox storage area and downstream of filter A100, filter A101, pump A106, and pump A107, will provide samples of lox being delivered to the S-IVB stage during the fast fill operation.

A new circulating pump will be installed between the fill line to the replenish storage dewar and the replenish line leading to the vehicle. Lox will be analyzed at point No. M4 while the pump is circulating fluid during or immediately after trailer unloading operations. Point No. M5 will provide samples of lox being delivered to the vehicle during replenishment operations. Points M6 thru M8, located in the lox pit at the base of the launch pedestal, will provide samples of lox being delivered to the flight tank interfaces. Sample points S1 and S2 located at the interface of

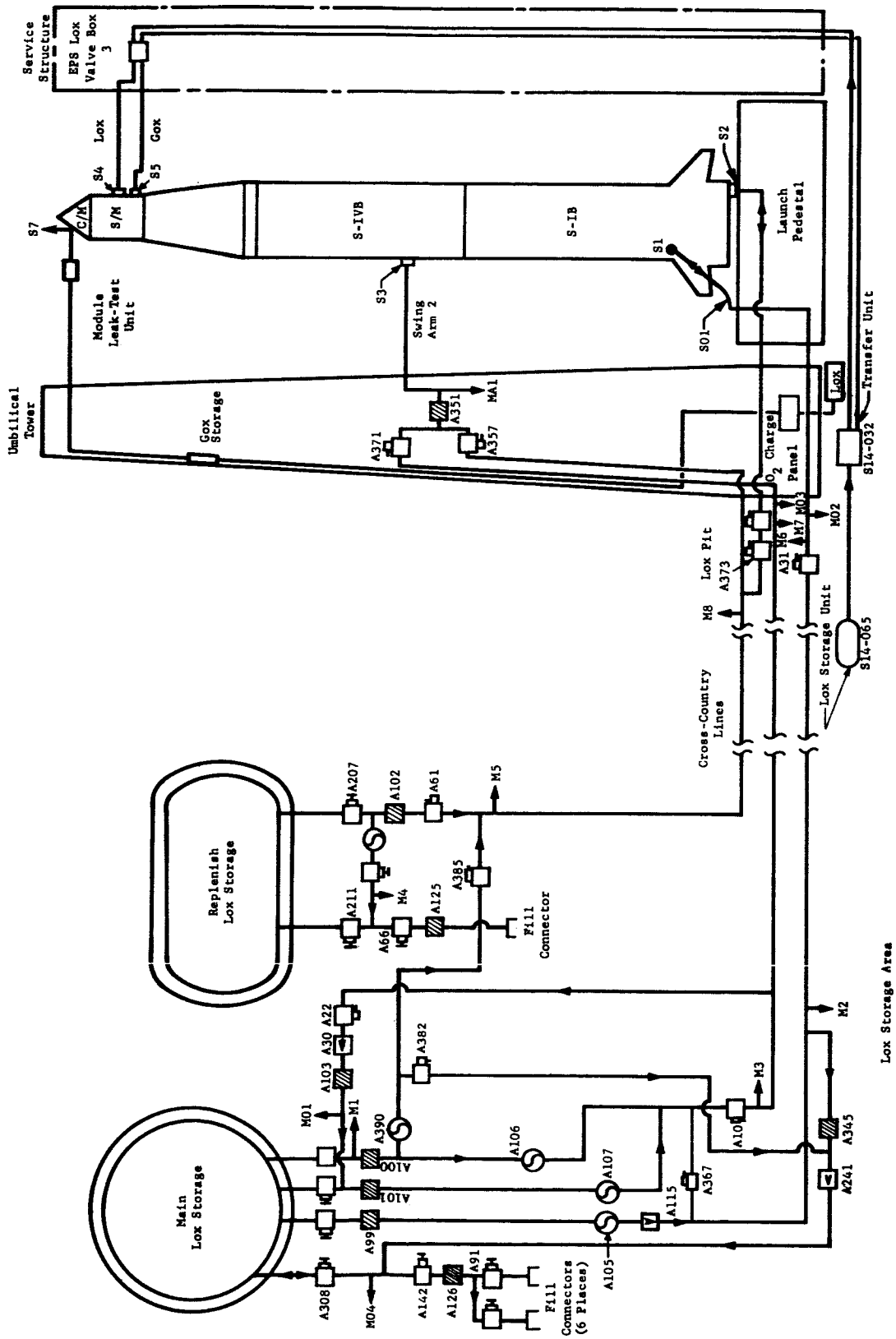

Fig. IV-1 Lox System, LC 34

the vehicle will provide samples of fluids delivered to the vehicle interface during checkout operations. Point MA1, which is located on the umbilical tower at about the 120-ft level and downstream of strainer A351, is an alternative monitoring point for M7. Samples can be drawn from points S1, S2, and S3 during wet loading tests and delivered to sample container or equipment without special environmental protection. However, if samples are required on the day of launch, the equipment must be (1) removed before launch, (2) provided with protective enclosures, (3) considered to be expendable, or (4) connected by sampling lines to remote locations.

Optional monitoring points MO1 thru MO4 are shown for analyzing the lox being returned to storage. Sample points S4 and S5 are provided for analyzing the lox and gox that is delivered to the electrical power system (EPS) on the spacecraft. Sample points S6 and S7 are provided for collecting samples of gox delivered to and from the gox storage bottles that service the command module.

LC 37 - The lox system shown in Fig. IV-2 is typical of the storage and transfer system at LC 37. The system is similar to that shown in Fig. IV-1 for LC 34. The only significant difference in LC 34 and LC 37 is that the transfer systems are slightly different in the lox storage areas. These differences eliminate the need for one optional monitoring point in the storage area and cause the monitoring points to be located at different points in the system.

LC 39 - The lox system schematic shown in Fig. IV-3 is typical of the storage and transfer systems being provided at LC 39A and LC 39B. Lox is received in transport trailers and transferred to the 900,000-gal. dewar located 1450 ft from the launch pad. A new circulation pump will be installed between the fill line to the dewar and one of the main transfer lines to the S-IC. The pump will be installed to obtain tank samples (point S1) while lox is circulated through valves A1 and A79. Point S1 can become a monitoring point by sharing equipment provided for M1 and M2 and the installation of switching equipment. The locations of monitoring points M1, M2, M3, and M4 are such that they are downstream from pumps and filters in the storage area and on the main fill and replenishment line of the ML. Alternative monitoring points MA1 thru MA5 are suggested for points that are nearer the interface of the vehicle and downstream of the final filter. However, these points are less desirable because of the environment the instruments will be exposed to and problems associated with sharing equipment. Optional monitoring points MO1 thru MO3 are indicated in the event it becomes necessary to monitor the properties of fluid being returned to storage.

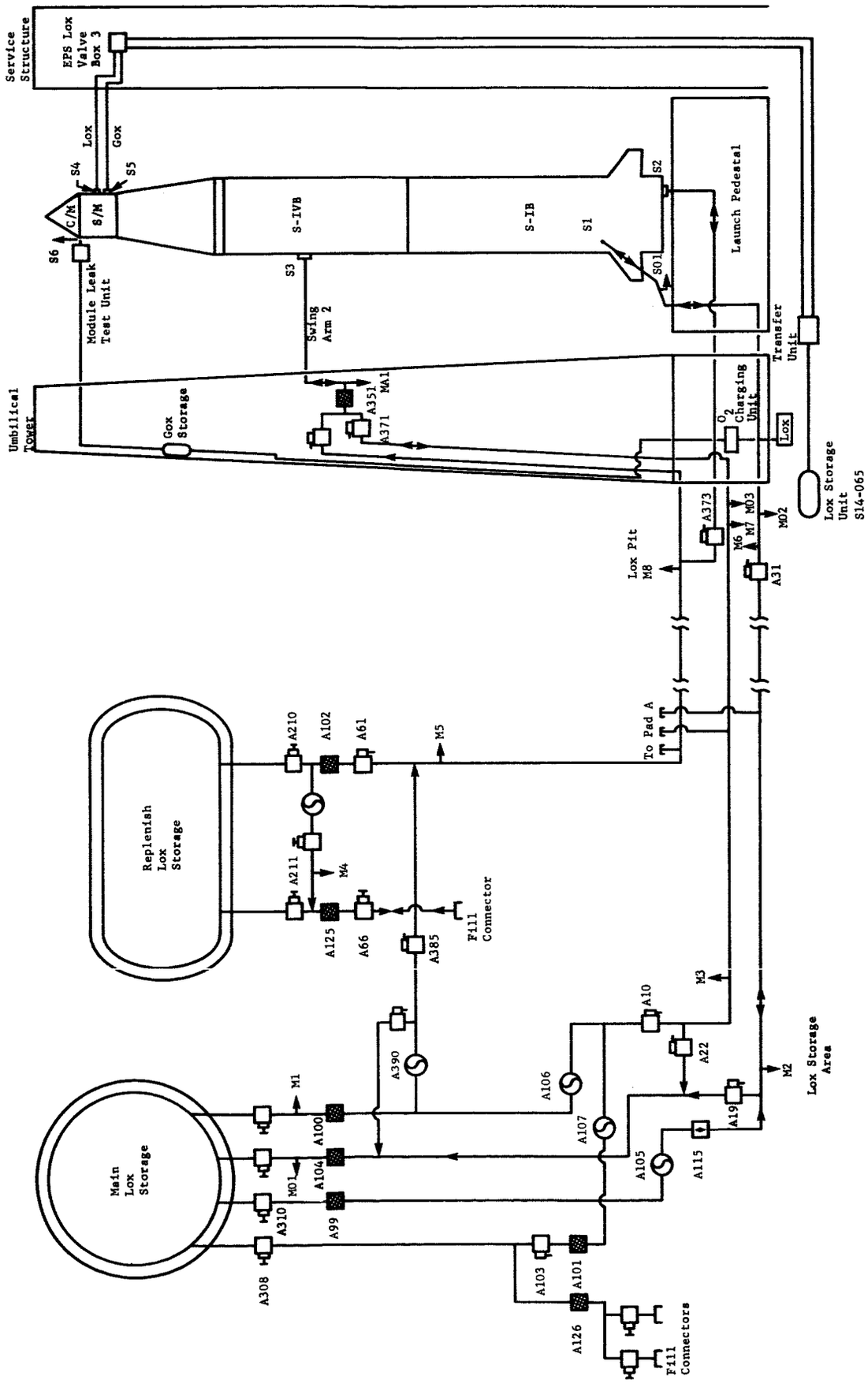

Fig. IV-2 Lox System, LC 37

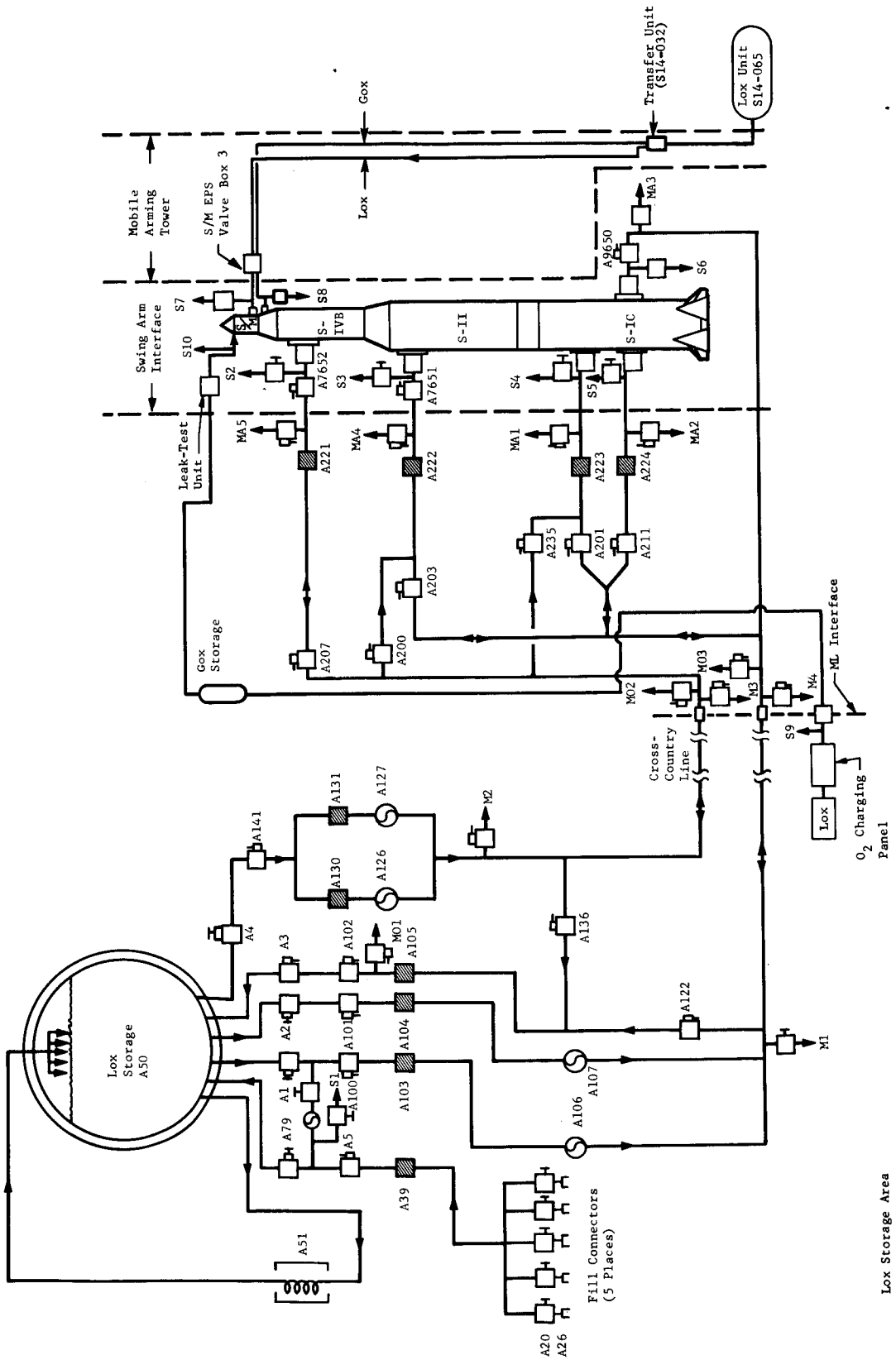

Fig. IV-3 Lox Transfer System, LC 39

2. RP-1 System

LC 34 - The RP-1 system schematic shown in Fig. IV-4 represents the system at LC 34. RP-1 that has met procurement specifications will be delivered to the two 30,000-gal. storage tanks located about 1000 ft from the launch pedestal. Point M1 is provided for monitoring the RP-1 stream during fast fill rate and point M2 will be used during low flow. Points M3 and M4 are used to monitor tank RP-1 that is circulated by pumps A4224 and A4223. Monitoring points M3 and M4 are located upstream of the filters so that representative tank samples may be obtained. Monitoring point M5 is located in the fuel pit at the pad and is located downstream of the filter so that a representative sample of fluid delivered to the vehicle is analyzed. Sample points S1 and optional point S01 are indicated for collecting samples of fluids delivered to the vehicle during checkout operations. Optional points M01 and M02 are shown if it becomes desirable to monitor propellant being returned to storage.

LC 37 - The RP-1 system schematic shown in Fig. IV-5 represents the system at LC 37. The monitoring and sample points are located similarly to those at LC 34 but there is one less monitoring point for analyzing RP-1 because of the single storage tank at LC 37. An alternative monitoring point (MA1), located downstream of the filter A512, is shown, but is a secondary choice because of the environment on the launch pedestal.

LC 39 - The RP-1 system shown in Fig. IV-6 represents the RP-1 system at LC 39A and LC 39B. The system sampling and monitoring points are located in the same relative positions as those at LC 34 and LC 37. Monitoring points M1 and M2 monitor the RP-1 during high and low flow, respectively. Point M3 is provided for monitoring the RP-1 while it is being circulated by pump A4003. Point M4 located on the ML and downstream of filter A4099 is provided for analyzing the RP-1 being delivered to the vehicle. An alternative point MA1 is located in the fuel service mast. M01 and M02 are optional points that can be provided for the analysis of fuel being returned to storage.

3. MMH and UDMH-N_2H_4 Systems

LC 34, LC 37, and LC 39 - The schematic shown in Fig. IV-7 shows the major service units, routing of service lines, and sampling points provided for servicing the S-IVB and spacecraft with storable fuels at LC 34, LC 37, and LC 39. Mobile service units are serviced, checked out, and delivered to the pads with fuel that meets specifications. The service units are positioned and connected to the pad transfer system. Lines are purged before trans-

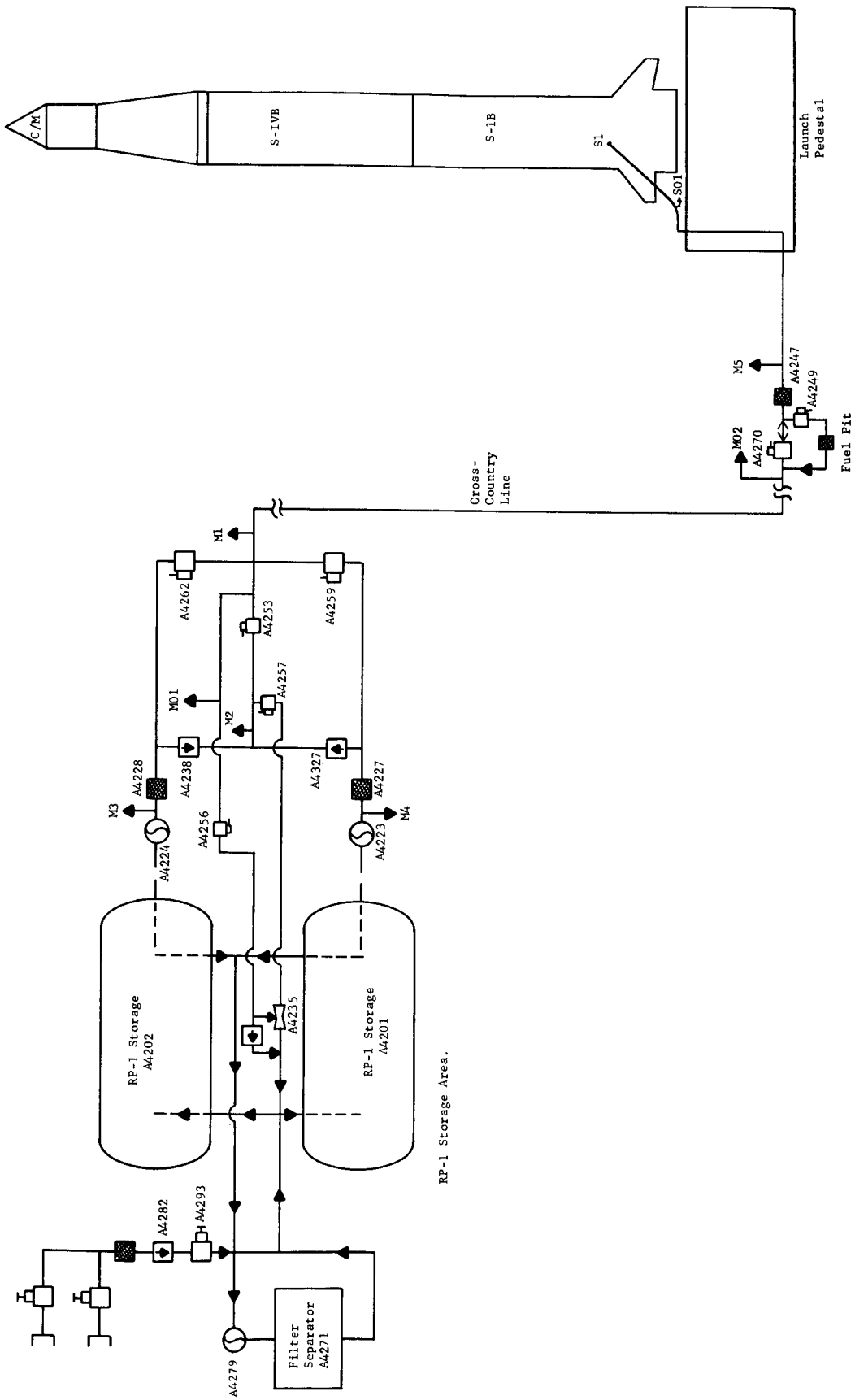

RP-1 Storage Area.

Fig. IV-4 RP-1 System, LC 34

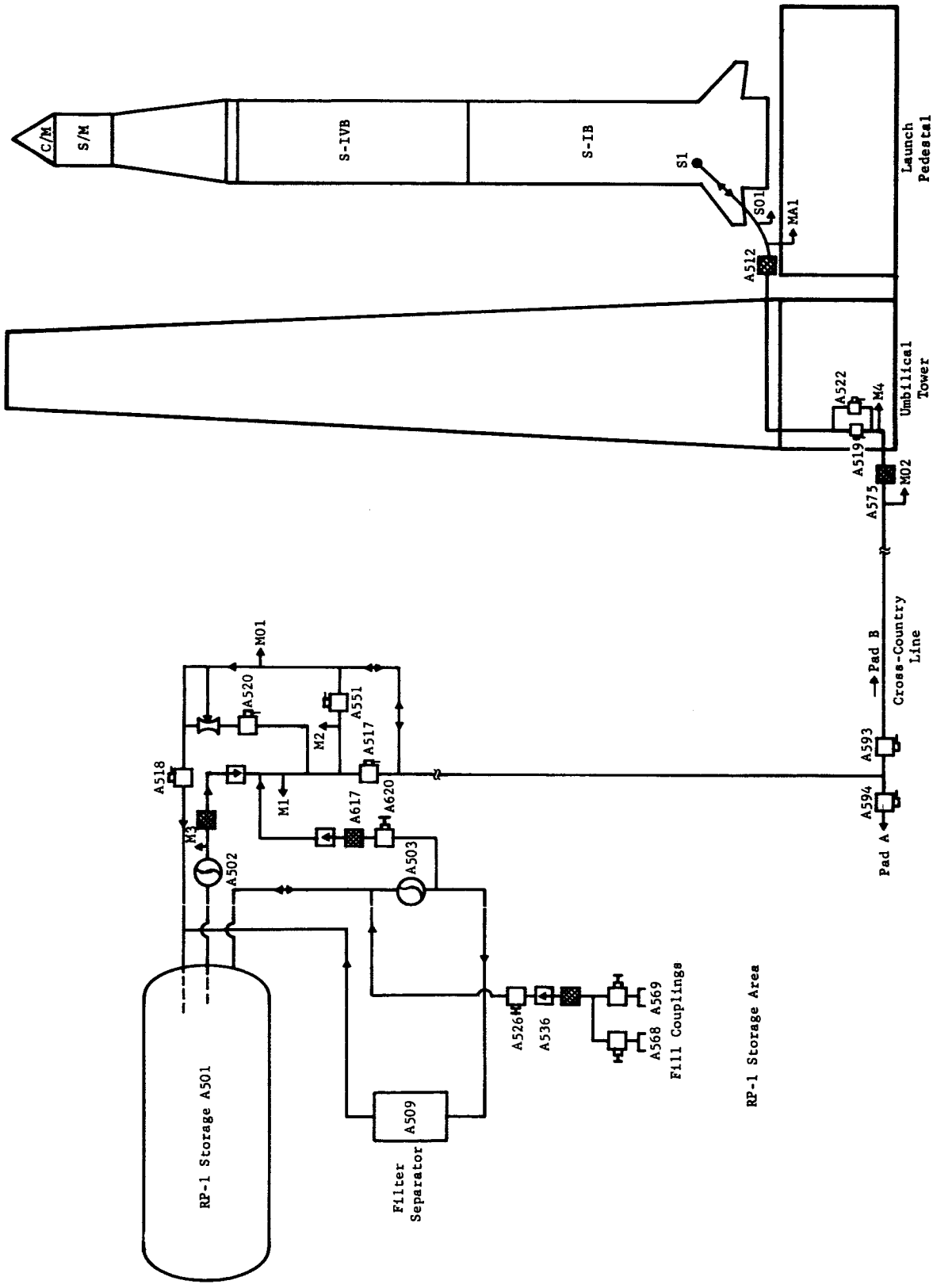

Fig. IV-5 RP-1 System, LC 37

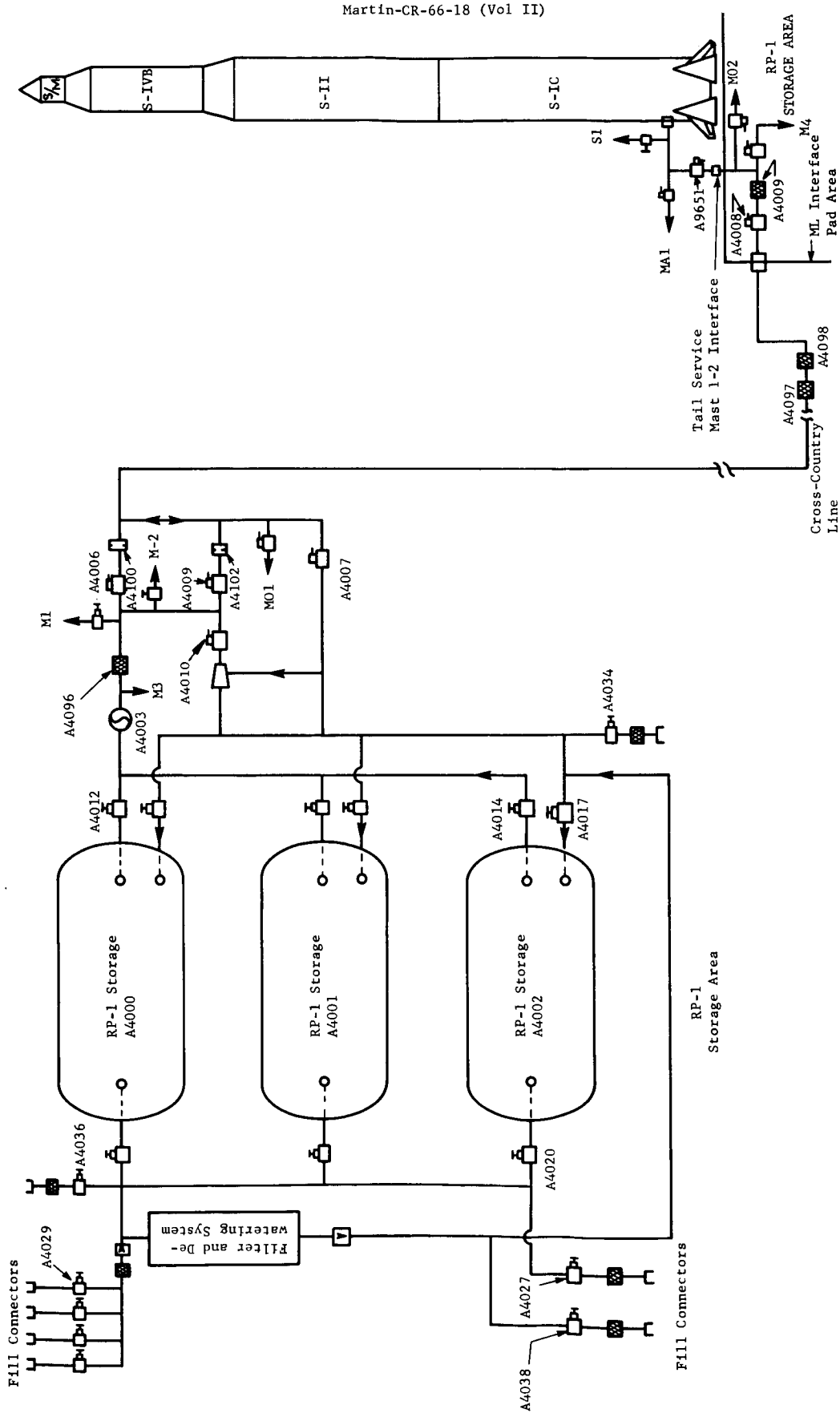

Fig. IV-6 RP-1 System, LC 39

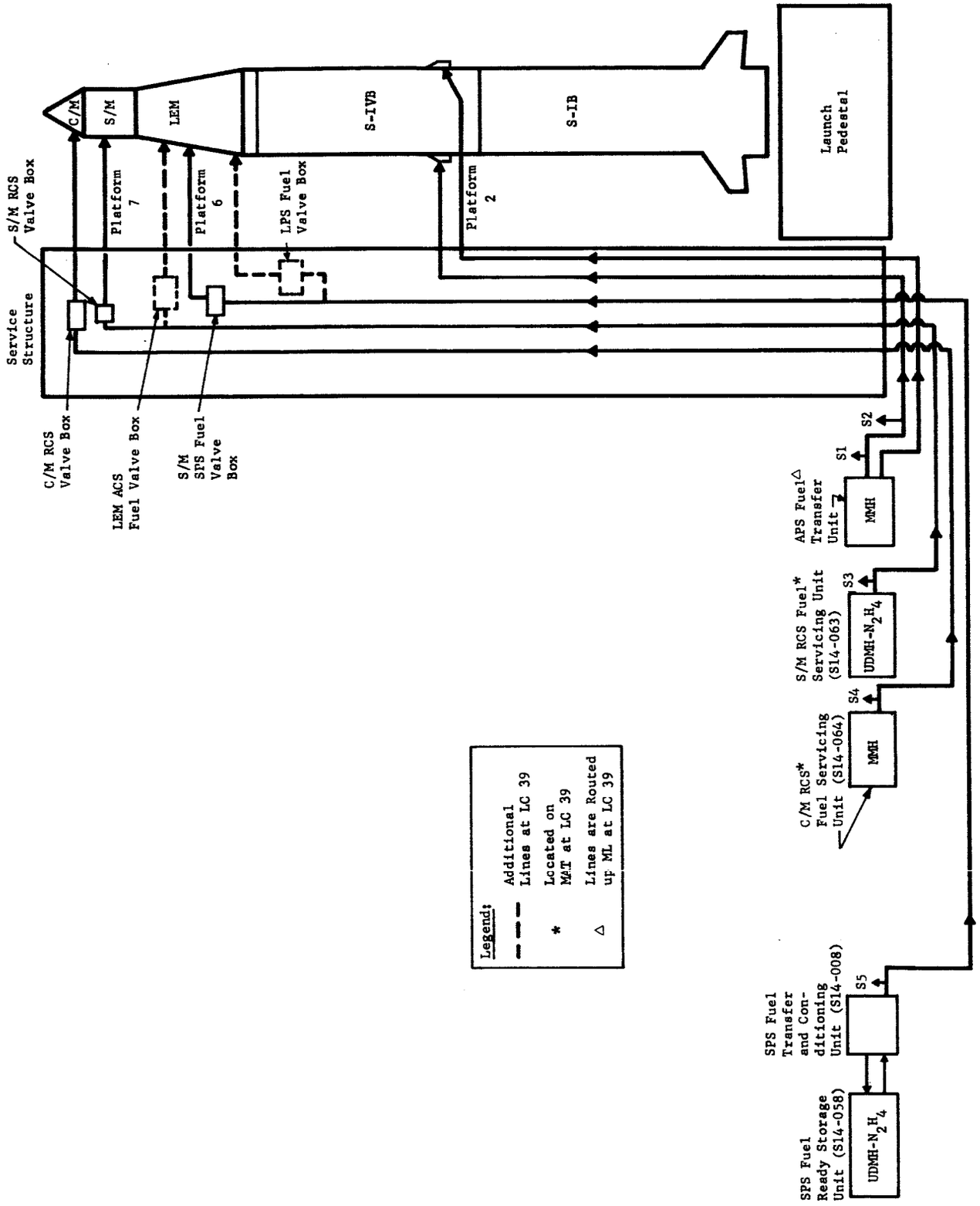

Fig. IV-7 MMH/UDMH-N_2H_4 System, LC 34, 37, and 39

fer of propellant to the auxiliary propulsion system (APS) of the S-IVB and service propulsion system (SPS), and reaction control system (RCS) of the spacecraft. Sample points S1 thru S5 are provided in the supply lines for the collection of samples before delivery of fuel to the service structure at LC 34 and LC 37 or the MAT at LC 39.

The service units have local and remote control so it was assumed that manual samples could be taken during the transfer operation. If manual sampling is not permitted, it will be necessary to adapt the sample points for remote operation.

4. N_2O_4 System

LC 34, LC 37, and LC 39 - The N_2O_4 system schematic shown in Fig. IV-8 is typical of the systems provided to service the spacecraft and S-IVB at LC 34, LC 37, and LC 39. The equipment and operations are similar to those described for the storable fuels. One less sampling point is provided for N_2O_4 than the storable fuels because the command module and service module require the same oxidizer.

5. H_2 Gas System

LC 34 and LC 37 - The gaseous hydrogen system schematic shown in Fig. IV-9 is representative of the system that is provided at LC 34 and LC 37 for the S-IVB turbine start bottle chilldown and fill operation. Monitoring point M1 is provided for the analysis of hydrogen gas delivered from the portable recharger to the facility storage system. Point M2 is provided for monitoring the gas leaving the facility storage and M3 is provided for the analysis of the gas delivered to the pedestal. An alternative monitoring point MA1 is shown, which is downstream of the Douglas valve panel 4B-433.

LC 39 - The gaseous hydrogen system schematic shown in Fig. IV-10 is representative of the system that is provided at LC 39 for the S-II and S-IVB turbine start bottle chilldown and fill operations. The sampling and monitoring points are located in the same relative position as those for LC 34 and LC 37. However, there is an additional alternative monitoring point for the S-II stage service system. Another sampling point is also provided at the S-II interface.

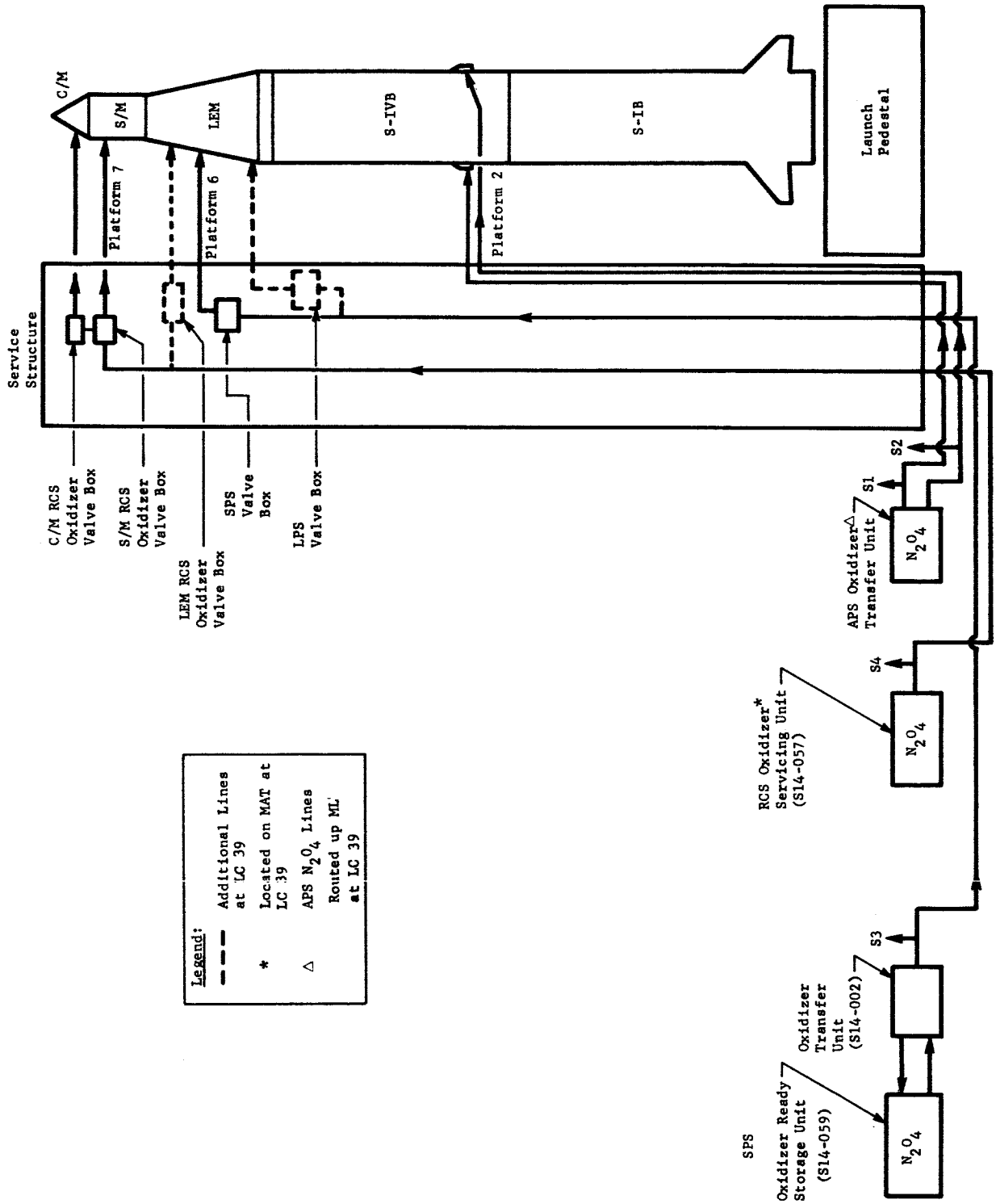

Fig. IV-8 N_2O_4 System, LC 34, 37, and 39

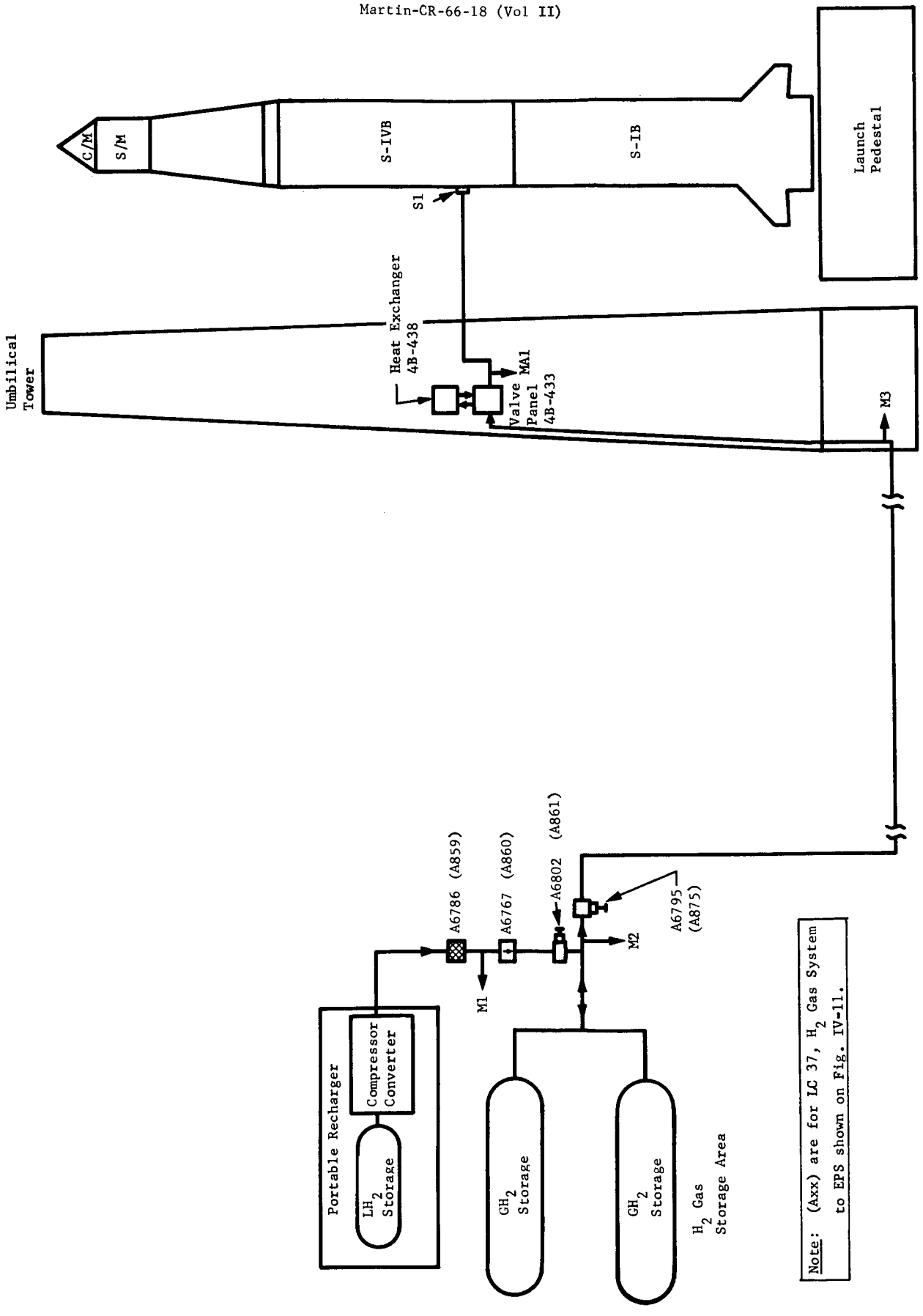

Fig. IV-9 GH_2 System, LC 34 and LC 37

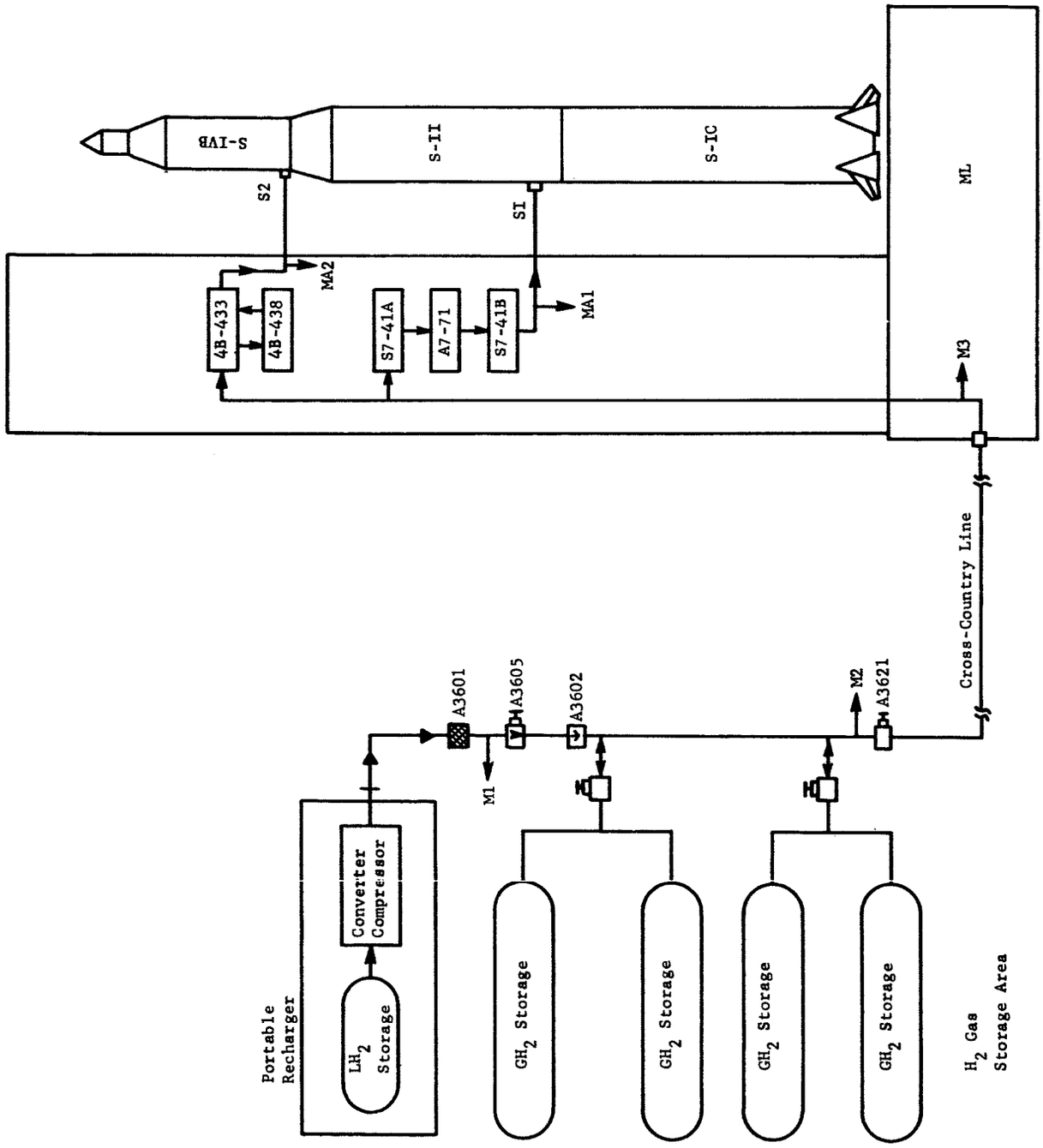

Fig. IV-10 GH_2 System, LC 39

6. LH_2 System

LC 34 and LC 37 - The LH_2 system schematic shown in Fig. IV-11 is typical of the systems at LC 34 and LC 37. LH_2 that has met the procurement specification is delivered to the 125,000-gal. LH_2 storage dewar located approximately 1000 ft from the launch pedestal. LH_2 will be delivered to the storage dewar by pressurizing the transport trailers with hydrogen vapor. A new LH_2 circulation pump will be installed between the supply line leading to the dewar and the supply line leading from the dewar to the vehicle. The pump will be used to circulate LH_2 from the dewar through valve A3303 and back through valve A3320 to the dewar. The circulated LH_2 will be analyzed at monitoring point M1 during or immediately after a load of LH_2 is delivered to the dewar. Point M2, downstream of valves A3306 and A3307 at LC 34 and downstream of the subcooler at LC 37, is provided for monitoring the LH_2 leaving the LH_2 storage area. Point M3 at the base of the umbilical tower monitors LH_2 delivered to the S-IVB. An alternative point (MA1), which is located downstream of filter A3931, is also shown. Sample point S1 is provided for the collection of sample test fluids during system checkout. Optional monitoring points MO1 and MO2 are shown for the analysis of fluid being returned to storage. Sample points S2 and S3 are provided for the collection of samples of LH_2 and GH_2 delivered to the electrical propulsion system (EPS) on the spacecraft.

LC 39 - The LH_2 system schematic shown in Fig. IV-12 is typical of the LH_2 system at LC 39A and LC 39B. Acceptable LH_2 will be delivered by truck to the 850,000-gal. LH_2 dewar located about 1450 ft from the launch pad. A new circulation pump will be installed, as was described for the LH_2 system at LC 34 and LC 37. A sample point S1 is provided for the collection of samples while the LH_2 is circulating. An optional choice is to make point S1 a monitoring point as at LC 34 and LC 37. Alternative sample point SA1 will eliminate the need for a pump and may provide an acceptable sample if the pressurization loop is activated immediately after LH_2 is delivered to the dewar. Point M1 is installed for analyzing

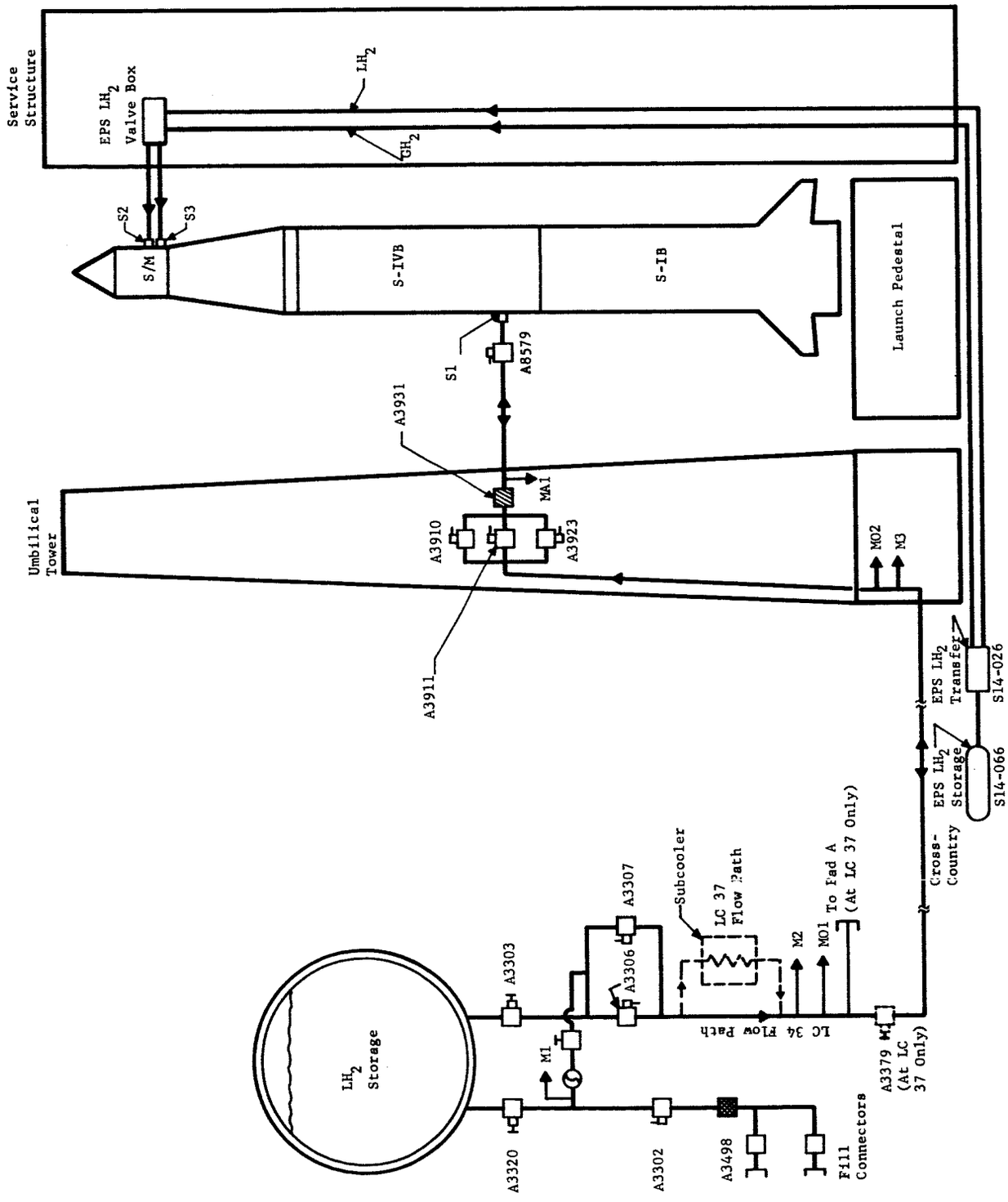

Fig. IV-11 LH_2 System, LC 34 and LC 37

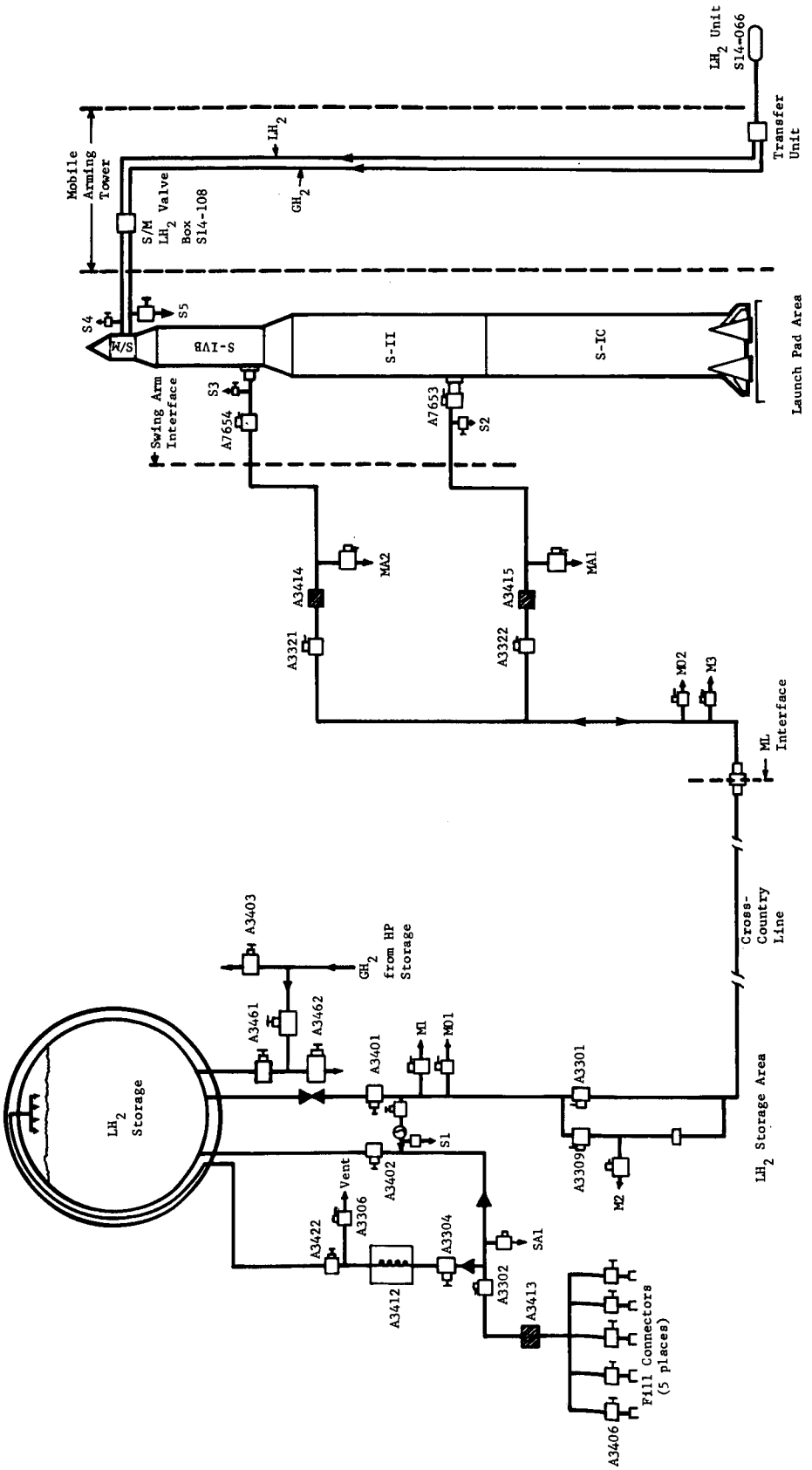

Fig. IV-12 LH_2 Transfer System, LC 39

the stream during fast fill and M2 is provided for low flow operations. Other points are in positions comparable to those at LC 34 and LC 37.

7. GN_2 System

LC 34 and LC 37 - The LN_2 storage system, converter compressor facility (CCF), high-pressure storage system, and the gas distribution system shown in Fig. IV-13 are typical of the systems provided for LC 34 and LC 37.

LN_2 which meets procurement specifications is delivered to the 35,000-gal. and 125,000-gal. LN_2 storage dewars adjacent to the CCF. A new circulation pump will be installed between the supply lines leading to the dewars and the discharge lines leading to the CCF. The new pump will permit the collection of representative samples of LN_2 from the dewars before operation of the CCF. Point M1 monitors the high-pressure N_2 gas leaving the CCF; M2 and M3 monitor the gas being delivered from the high-pressure gas storage battery located about 300 ft from the launch pad, to the automatic ground control station (AGCS). Two additional monitoring points (M4 and M5) monitor the gas downstream of the two main filters in the pneumatic control distributor (PCD). Alternative monitoring points are shown (MA1 through MA6) at locations further downstream in the system, at valve panels 10, 2, 9, Douglas panel B, and the IU console. Sample points S2 thru S21 collect fluid samples at the interface of the supply systems and the vehicle. These sample points are provided at cable masts, swing arms 1, 2, and 3, and on the service structure for the S-IVB APS and spacecraft systems.

LC 39 - The nitrogen system shown in Fig. IV-14 is representative of the system installed at LC 39 for servicing the VAB, LC 39A, and LC 39B. LN_2 that meets the procurement specification is delivered to the 500,000-gal. LN_2 dewar in the CCF area. A new circulation pump will be installed between the supply line to the dewar and the line to the high-pressure pump-vaporizer units. Samples of LN_2 will be collected from point S1 while LN_2 is pumped from the dewar through valve A2515 and back to the dewar through valve A2452. High-pressure gas leaving the CCF for delivery to LC 39A, LC 39B, and the VAB will be monitored at point M1. Point M01 is optional for monitoring filtered LN_2 being delivered to the pumps. Point M2 will be provided for the analysis of nitrogen being delivered

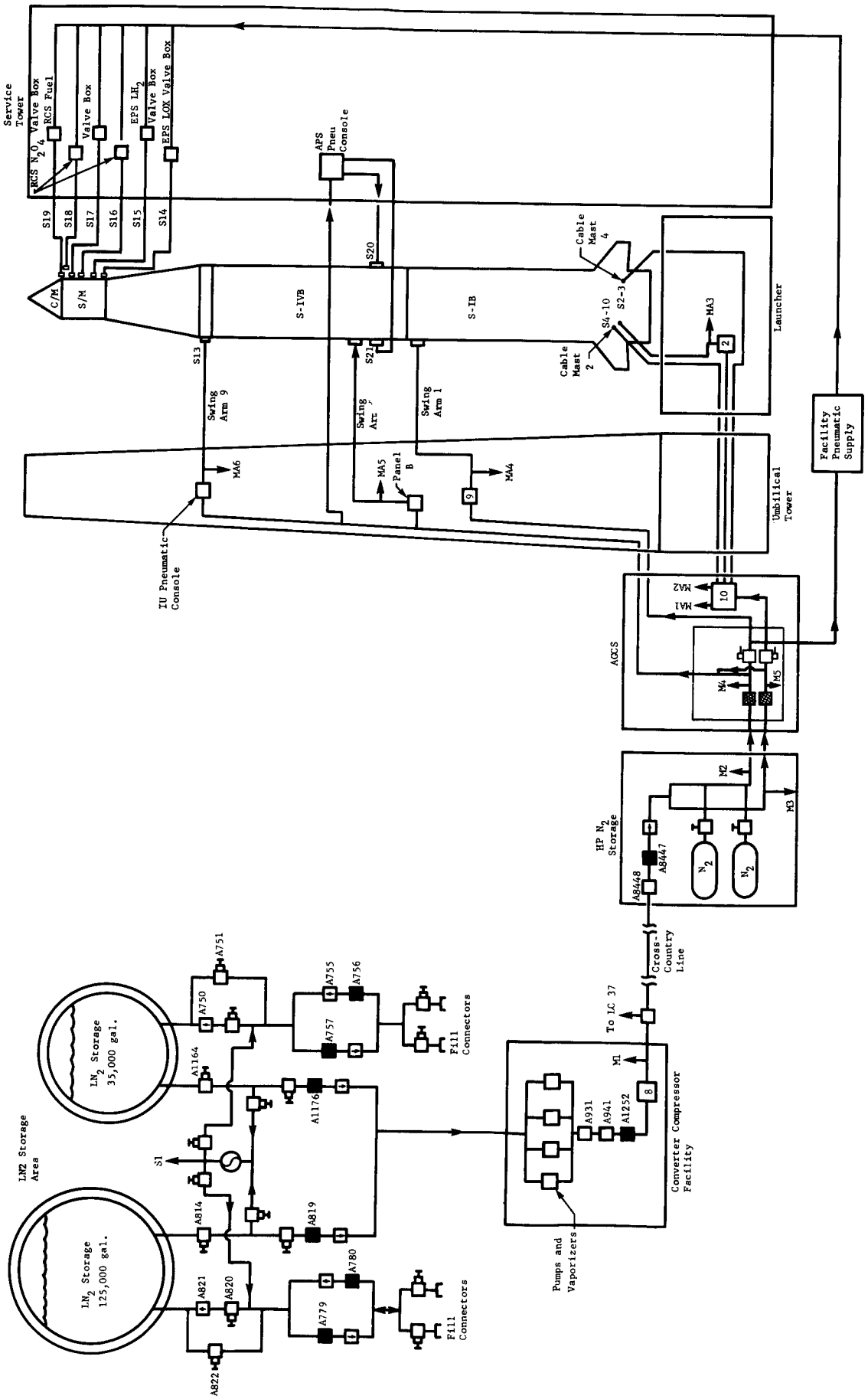

Fig. IV-13 GN_2 System, LC 34 and LC 37

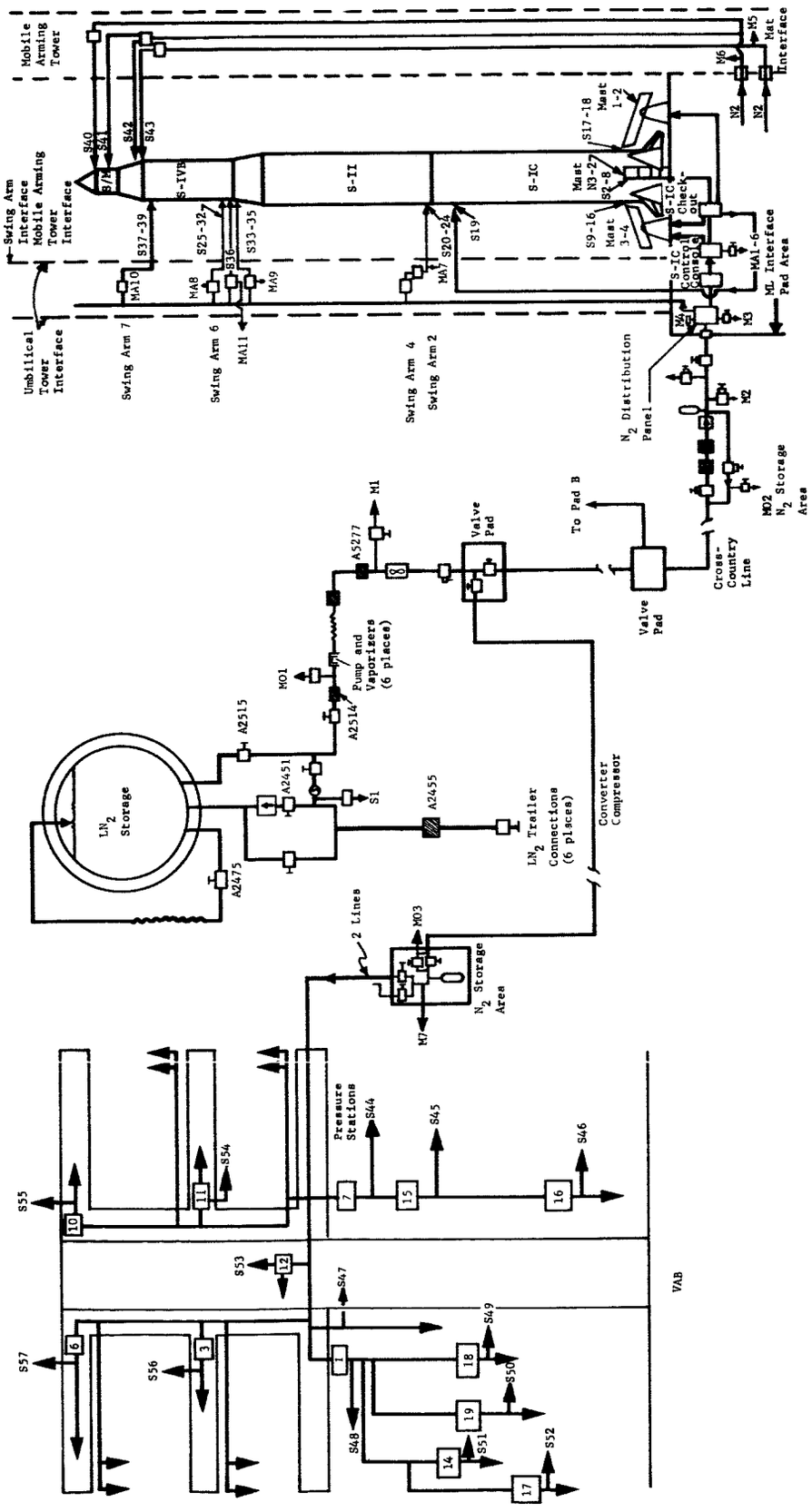

Fig. IV-14 N_2 Gas System, LC 39

to the ML. Optional point MO2 is shown for monitoring gas leaving the gas storage battery for use at the VAB or other pad. Two monitoring points (MA3 and MA4) are mounted on the ML at the nitrogen high-pressure distribution panel for analyzing the gas delivered to the launcher and the umbilical tower. Alternative monitoring points (MA1 thru MA6) are shown at the S-IC pneumatic control consoles that supply nitrogen to the three service masts. Alternative monitoring points MA7 thru MA10 are located at the pneumatic control consoles on the umbilical tower at swing arm levels 4, 6, and 7. Sample points S2 thru S43 are located at the skin of the vehicle for the collection of fluid samples during checkout operations.

Monitoring point M7 is located in the VAB gas storage area for analyzing gas before delivery to the VAB. An optional point MO3 is shown for analyzing the gas delivered to the launch pads. Sample points S44 thru S57 are located in the VAB for the collection of gas samples on the downstream side of the pressure-reducing station.

8. He Gas System

LC 34 and LC 37 - The helium gas system schematic shown in Fig. IV-15 is representative of the system which services LC 34 and LC 37. Helium gas that meets procurement specifications is delivered in truck-trailers and is received at the CCF. Monitoring point M1 is provided in the CCF for analyzing the gas that is leaving the facility for distribution to LC 34 and LC 37 high-pressure gas storage areas. Points M2 and M3 are provided for monitoring the gas leaving the high-pressure storage area for delivery to the AGCS at the base of the umbilical tower. Points M4 and M5, located downstream of the two main filters in the PCD, are for analyzing the gas delivered to the umbilical tower, facility pneumatic supply, and the launcher. Alternative monitoring points are shown at valve panels 2, 4, 9, and 10 and Douglas panel B. Sample points are provided at the interface of the vehicle with cable masts, swing arms, access arm, and service tower.

LC 39 - The helium system shown in Fig. IV-16 is typical of the system provided for servicing the high-pressure gas storage system at the VAB, LC 39A, and LC 39B at Complex 39. Helium gas that meets procurement specification will be delivered to the CCF in tube-bank rail cars. Gas will be monitored at M1 before leaving the CCF for distribution to the high-pressure storage systems. Gas leaving the storage system at the launch pad will be analyzed at points M2 and M3.

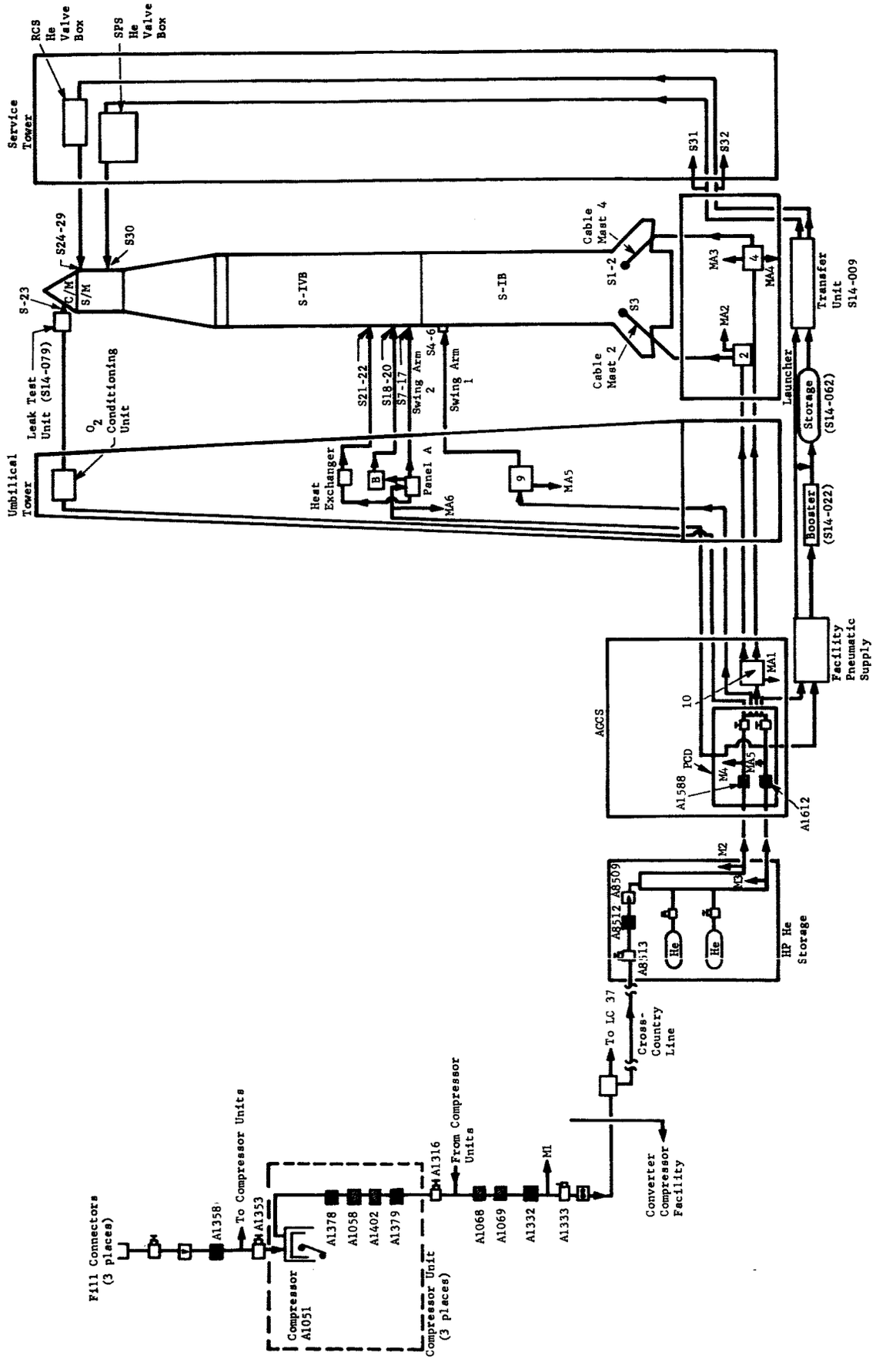

Fig. IV-15 Helium Gas System, LC 34 and LC 37

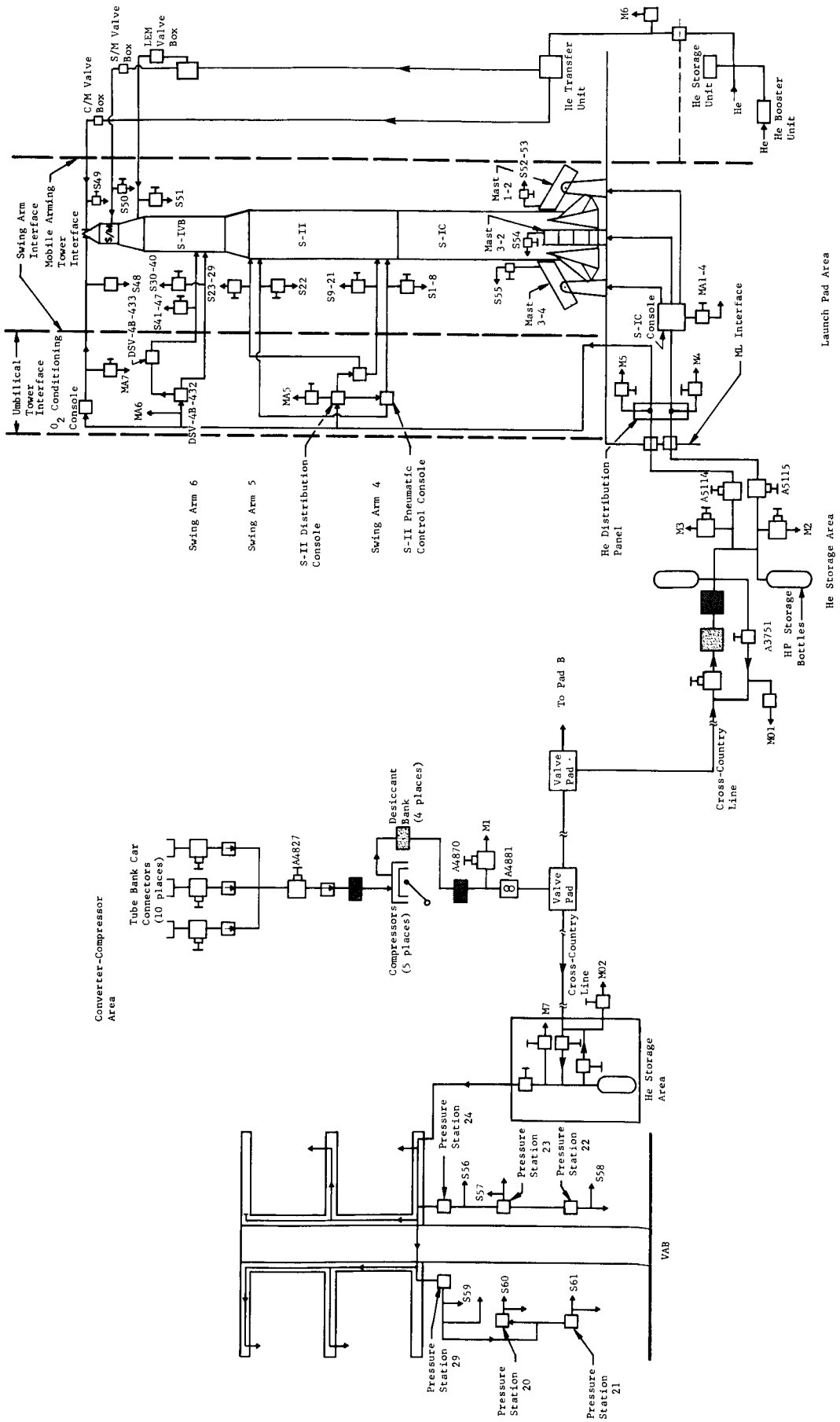

Fig. IV-16 Helium Gas System, LC 39

Helium will be monitored again on the ML at points M4 and M5, which are on the downstream side of the two main filters in the helium distribution panel. Alternative monitoring points MA1 thru MA7 are located at the S-IC console and pneumatic control consoles at the elevation of swing arms 4, 5, 6, and 7. Sampling points S1 thru S55 are also provided at the interface of the vehicle and the service masts, swing arms, access arm, and the mobile arming tower. An optional point (MO1) is shown for the analysis of helium transferred from the pad storage to the VAB or the other launch pad. Monitoring point M7 is located in the VAB high-pressure gas storage area for the analysis of helium delivered to the VAB. Optional point MO2 is shown for the analysis of helium transferred to the launch pads. Sampling points S56 thru S61 are provided in the VAB for the collection of samples on the downstream side of the pressure-reducing station.

V. DESIGN CRITERIA AND SPECIFIC EQUIPMENT RECOMMENDATIONS

A. SAMPLING

1. General Considerations

In many instances the final design criteria and specific equipment recommendations given in this section are either equivalent to, or identical to, methods existent or planned, separate from this study, for the fluids, systems, and complexes at KSC.

a. Mechanical Sampling Devices for Purity Parameters

Mechanical sampling for purity parameters (as distinguished from particulate sampling) as it exists or is planned for these facilities cannot practicably be improved for the majority of these fluids, at least for the noncryogens. Equipment used to isolate and transport fluid for laboratory analysis must not compromise the physical integrity or contamination-controlled status of the system from which the fluid is withdrawn, or the contamination level of the fluid sample itself; it must accept and deliver the sample with a minimum of operations required for manipulation, must be easily transportable, low in cost for both initial procurement and replacement, easily cleaned and serviced, lightweight, relatively small, rugged, and uncomplicated.

A container, to meet these requirements, must be corrosion resistant, mechanically strong, impervious to and nonreactive with the sampled fluid and the environment, and easily cleaned and maintained and must contain the sample fluid by gravity or complete volumetric confinement and provide easily opened and resealed filling and discharge ports. There has not been found, nor is there likely to be found, a device more capable of fulfilling these requirements than the bottle.

The materials of construction and the methods of closure may be modified to improve durability and safety. Valving may be provided to purge the bottle before filling. Calibrated entrapment pockets may be provided to retain and allow vaporization of a known mass of cryogenic fluid so as to retain the entire gaseous product. Burst discs,

relief devices, pressure and level gages, temperature indicating devices, carrying handles, transporting containers, flow-conducting accessories, thermal insulation, and other accouterments designed to protect the container or its contents may be provided to facilitate filling, transporting, or discharging or to provide information about the physical state of the contents.

b. Mechanical Sampling for Particulate Contamination

The existent and planned methods of sampling for particulate contamination in these systems and in those in use for comparable test and launch facilities around the country are wrong in essence, philosophy, and practice.

The fundamental requirement for this function is entrapping a portion of these particulates in a manner that permits their microscopic observation, sizing, counting, and measurement of their mass either directly from the operational stream, or by some single or multiple retransfer process (e.g., by membrane filtration of the backflush solvent of a process-stream-type filter used for sampling). The sample must be representative of, or be capable of being related to, the concentration of particles in the fluid sampled for each particle-mass-limit parameter and particle-size-limit parameter of interest to the specification.

The most significant problem that accompanies this operation is the fact that particle generation can occur in so many ways. Particles are generated or transferred each time two surfaces touch, by mechanical and chemical attrition of the surfaces (abrasion, corrosion), by electrostatic attraction, and by cohesion or adhesion. Particles are borne by air currents and by Brownian movement, and transferred by condensation. In fact, many naturally occurring physical and chemical changes are attended by particle generation.

Thus, the most difficult part of particle sampling is not the sensitivity of the detection and sizing method, but rather the exclusion from the counting surface of particles that were never in the operational fluid stream. These occur on the counting surface before sampling and on the flow-contacting surfaces of the sampling-point connections and of the sampling tool. They are accidentally transferred to the counting surface during

installation of the counting surface into the sampling tool, during its removal from the tool, and during counting. They are generated by abrasion of mechanical components during the installation and removal of the counting surface and the sampling tool. They are transferred from the flow-contacting surfaces of sampling and sample-transfer equipment in those cases where the fluid is returned to the laboratory for filtration and counting. They are transferred from adjacent surfaces, from the atmosphere, and from personnel during all times that the sampled fluid or the counting surface is exposed.

These contributions do not seriously affect total-filterable-solids determinations, but they frequently produce a serious effect on particle size and count determinations.

In view of this, exposure of the sampled particulate matter to environmental contributions should be minimized by filtering for particle-count criteria at the sampling site; by precounting the membrane after the sampling tool is connected to the sampling point and an initial operational fluid flow has occurred through it; by sampling the flow and counting particles without disturbing or transporting the sampling device between these operations; and by taking other allied precautions that would minimize or account for the contribution to the sample from sources other than the operational fluid.

The astonishing aspect to the whole particle sampling and counting problem is that no one is taking these fundamental steps toward sample validity, although all users, with whom the concept of the inline flushing/precount/sampling/final count device was discussed, agreed that the device appears to answer the particle sampling and counting problem, in concept, at least. However, the industry still uses one of two general procedures. The first is to take a fluid sample in a container, filter this sample through a membrane that has a counting grid imprinted on it, and rinse the membrane and transfer it to a microscope stage for counting. The second is to take a particle sample from the fluid directly on the counting surface, which is evaluation-rinsed or precounted before assembly, transported to the sampling site, connected to the sampling point, disconnected from the sampling point, and transported back to the laboratory (in most instances in uncontrolled orientation with respect to the vertical). In the laboratory, the sampling device is disassembled, and the membrane is transferred to the microscope stage for counting.

c. Isokinetic Sampling

The next area of significant departure from prior art resulting from this study is the recommendation that all samples taken from cryogenic fluid streams and all particulate samples taken from the remainder of the fluids while in operational flow be taken through either a Wyle Laboratories dynamic fluid sampler (DFS) or a Maledco Engineering Co turbulent flow sampling valve (referred to as a Maledco valve) depending on the line sizes and fluids involved.

Because this is a very controversial parameter, previous studies pertaining to it have been investigated thoroughly.

Reference 1 states that "in general, it was found that in regions of turbulent flow in a fluid transfer system, the quality of a sample is unaffected by the configuration of the sampling system or the rate of sample withdrawal." The same report, however, states that its conclusions are less valid for particles larger than 100μ.

At about the same time, a Wyle Laboratories test report, Evaluation Testing of a Flow Sampling System Designed by the Fluor Corporation, Ltd, (Ref 2) showed that in drawing a sample from the approximate center of a flowing stream of gaseous nitrogen, 95.8% of the known concentration of particulates in the operational stream was lost in the sample stream; and for water as the test medium, 22.5% was lost. The flow was turbulent, with Reynolds numbers of 180,000 to 200,000.

Another Wyle Laboratories report, Evaluation Testing of a Flow Sampling Wedge, (Ref 3) showed that a maximum error of 11.5% greater than the known concentration of particulates in the operational fluid stream occurred in the sampling stream when gaseous nitrogen was used as a test medium and a maximum error of 2.5% loss when water was used as the test medium.

Industry opinion also is divided. One Saturn contractor stated that his firm saw no value in isokinetic probe or wedge sampling in turbulent streams and that a simple side tap will give representative samples of particle contamination in any volume-of-flow system as long as the flow is turbulent.

They cited the work done at Oklahoma State University in support of this, which, although done in hydraulic systems, they state is equally applicable to gas systems and to those of other liquids besides hydraulic fluids. However, the report of this work (Ref 4) intrinsically excludes this extrapolation of its determinations when it states (p 88): "The fact that anisokinetic conditions cause only a slight error can be attributed to the close relative densities of the liquid and the contaminant and also the high fluid viscosity. In a gaseous system where the fluid viscosity is negligible, the adverse effects of anisokinetic sampling can be expected to increase considerably. The consistency and accuracy of the results obtained using the isokinetic probe provides a means by which various sampling devices can be evaluated."

Since the characteristics of the turbulent flow sampling devices are based on the performance of the isokinetic probe in this evaluation, no further extrapolation to other media may be made than is made for the probe evaluation results. The same parameters of high fluid viscosity and close relative densities of the liquid and the contaminant would also promote the homogeneity of the contaminant in the turbulent zone, and the same argument against extrapolation from these conditions to those of other media can be made in the case of turbulent zone sampling. This restriction is supported by the fact that when the turbulent flow valve was installed with its outlet downward, erratic results were obtained, one sample being in excess of the probe level of particulates by 41% (p 93 and 94 of Ref 4). It seems clear, therefore, that even in this viscous medium, homogeneity of particulate matter in the most turbulent zones was barely maintained.

One of the oldest and largest West Coast liquid-fueled-vehicle manufacturers and testers said that isokinetic device sampling is ideal in turbulent flow conditions and this same organization has used them in liquid propellant systems of up to 12-in. line size and 5000-gpm flow rates.

On the basis of the considerations presented in this section, it is concluded that, for particles larger than 100μ in fluids less viscous than MIL-H-5606 hydraulic oil, isokinetic sampling is necessary for adequate representation in the sample of the system condition of particulate content regardless of whether the flow is laminar or turbulent.

d. Moisture Sampling

It is the opinion of the industry that moisture analysis, to be valid, must be performed directly on the flowing sample stream at the site of sampling. With this restriction, it only remains to determine what technique will provide the fastest, simplest, cheapest, most practical, and most reliable determination of moisture at that location.

The best determination, qualitative and quantitative, that can be developed for the presence of a substance is based on the detection of the most characteristic and specific property or properties of that substance. The extent to which these properties are not unique to that substance governs the nonspecificity of the determination.

One of the most specific and characteristic properties of water when it is compared with the remainder of the impurities of interest to the scope fluids is its ionic bonding and the consequent capability of being electrolyzed. The current necessary to accomplish this is strictly proportional to the quantity of water dissociated, and, therefore, the characteristic is optimum for quantification as well as detection.

Therefore, an instrument that can measure and report the quantity of electricity required to dissociate the moisture in the flowing sample stream in an efficient, reliable, and economical manner hardly needs improvement. The process could be improved only by devising another instrument to more efficiently detect and quantify a property of the substance that is just as specific to moisture, or more specific. Such has not been found. The only improvement that could be proposed for the very efficient instruments available is to physically incorporate their sensing chambers into the operational stream rather than supplying them with a diverted sample stream. This would attain only a very small reduction in time response to a parameter change in the operational stream. This slight improvement would be considerably offset by the functional danger to these systems of inserting hardware in the system flow path itself.

The evaluations and reports made by NASA and other organizations, the users' satisfaction as disclosed by the survey conducted during this study, and the theoretical points just outlined form a basis for concluding that the commercial instrumentation based on electrolytic dissociation of moisture is entirely adequate for moisture determination in the gases included in this study, when this function is to be performed as a separate sampling (intermittent determination) activity. This statement is not intended to detract from their application to continuous determination (monitoring) but rather recognizes that other methods such as mass spectroscopy are more suitable to the detection of moisture in the monitoring situation where the cost of the hardware is being shared by other parameters detected.

It is therefore recommended that, where monitoring instrumentation for several parameters is not implemented at a given sampling point and where moisture at this point is of serious concern, these electrolytic moisture-measuring devices be left on a diverted sample stream from the sampling point continuously and thus be used as monitors rather than samplers.

e. Procedures

The procedures given to accompany the design criteria of this section cannot be more definitive than are the equipment design criteria themselves without compromising the integrity of the design criteria.

For example, Complexes 34, 37, and 39 are at present using the cryogenic samplers manufactured by the Cosmodyne Corporation for taking purity samples of their operational cryogenic fluids. Design criteria have been prepared that define, in objective terms, the functional requirements of this type of sampling device; limit its materials of construction; provide a base level for the quality of construction; and limit its size, weight, and complexity of servicing and operation. Yet they do not limit the product of these criteria to what is now in existence and to what is commercially available. If they did, they would be intrinsically worthless since such data already exist, e.g., Military Specification MIL-S-27626A. The reason design criteria have been provided for this equipment, therefore, is so these criteria may be used to develop improved equipment that will perform these functions more

reliably, efficiently, and economically. Thus, in the example cited, a more efficient cryogenic fluid sampler, shown in Fig. V-1 and V-2, is being developed that will perform all functions and meet all design objectives of the criteria while improving on those of existing equipment in many respects. Its configuration will be different however from that of existent equipment, and to attempt a step-by-step procedure for its use at this time would be premature. It would also reflect unfavorably on the procedures that are used at Complexes 34, 37, and 39 and that are entirely adequate for operation of the present equipment.

For equipment that is essentially novel, such as the in-line filter holder and counter, also defined by design criteria, it would be manifestly impossible to provide a detailed, step-by-step, operational procedure since the equipment has not yet been developed. The general operating principles only, therefore, will be given.

f. Comparison of Design Criteria and Specific Equipment Recommendations with Those Used at Complexes 34, 37, and 39.

The scope of work for this study stated the requirements to:

> Investigate the present sampling techniques, procedures and equipment utilized at the launch facilities during both the supply and actual loading operations; analyze these techniques as to applicability, practicality, repeatability, reliability, simplicity, speed and general representative nature; through a survey of NASA prime contractors and other manufacturers, determine the most advanced techniques/procedures/equipment being utilized which are providing the most optimum results when analyzed according to the factors listed above. Compare these techniques/procedures/equipment with those used at the launch facilities and make specific recommendations as to how the facility techniques might be improved. Provide complete technical details with the recommendations.... Evaluate the latest sampling equipment theories, not in general use, for their feasibility and applicability to launch facility applications. This effort should apply particularly to sampling valves. Make specific recommendations as to each one's suitability and where future development efforts might best be spent.

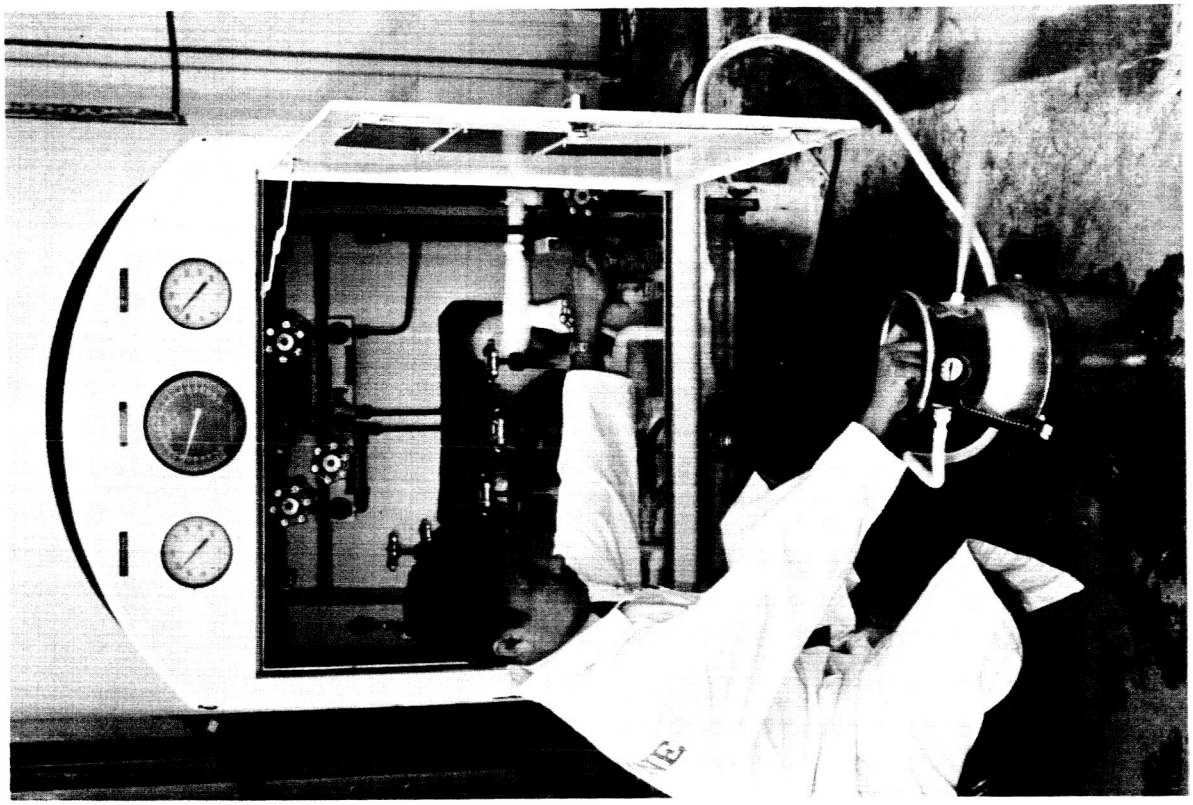

Fig. V-2 Cosmodyne Model CS-5.0 In Use

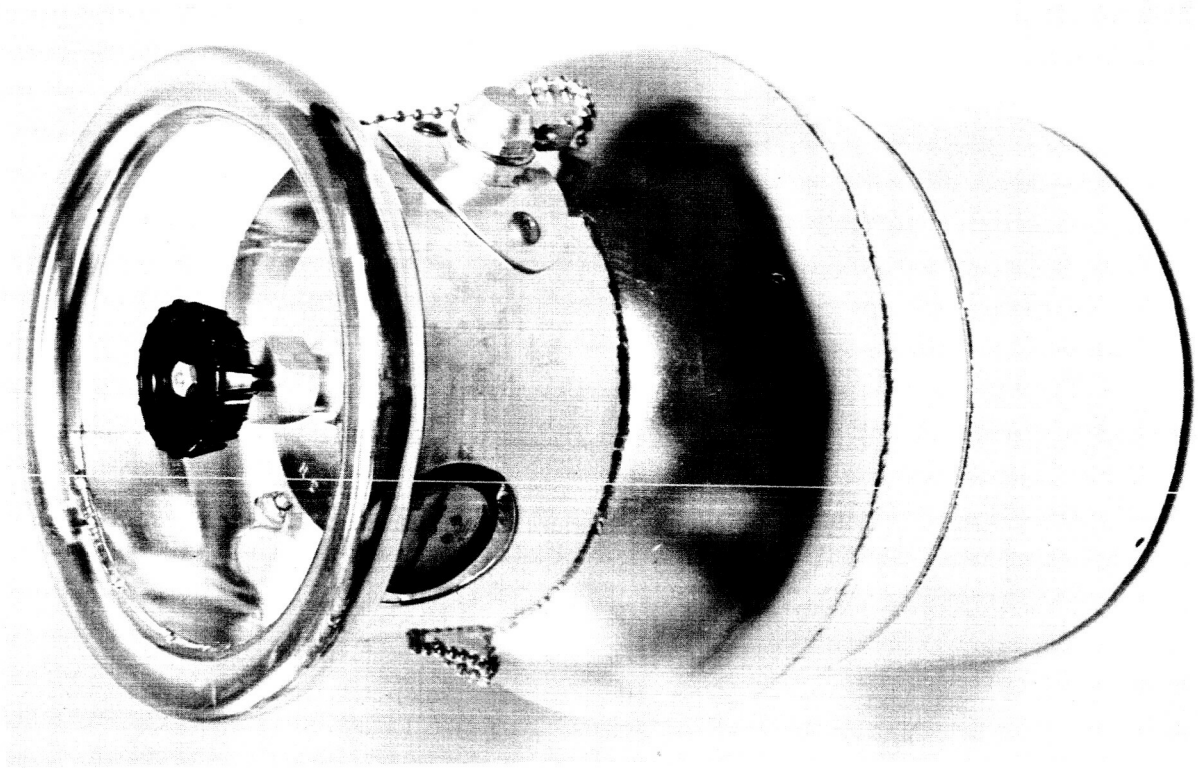

Fig. V-1 Cosmodyne Cryogenic Sampler, Model CS-5.0

The present sampling techniques, procedures, and equipment at the launch facilities were investigated to the extent possible to determine their existence. In addition, those at MSFC were investigated on the same basis.

The people who were contacted at these facilities, their organization and function, the statements they made, and the materials they provided are all contained in the Survey Reports, an abridged compilation of which forms a portion of this final report.

At Huntsville it was determined that only LO_2, LH_2, and GN_2 are sampled operationally as propellants and pressurants. Of these, only GN_2 has a written procedure, and that is for particulates only. This information was obtained from the officials of SPACO Corporation, of NASA-MSFC Quality, and of the Chemical Analysis Division, P and VE, which performs all sampling at Huntsville.

At the Kennedy Space Center, the Survey and Evaluation Team met with the responsible officials of the High Pressure Gaseous Support Section, Complex 39; Propellant Systems Component Laboratory Section; Bendix Work Area No. 7; Launcher Environmental Section; Complex 34 Mechanical System Laboratory Section; Converter Compressor Facility Complexes 34/37 (Bendix Pneumatic Networks Group); Operations Engineering Branch, MSOB; Launch Support Operations Division SOP-145; Fuel Section Propellants Branch LVO-341; Complex 37 LO_2 area; North American Aviation S&ID Quality Engineering Group of Quality Assurance, MSOB; the Cape Branch of the AF Chemical Laboratory ETORL-2; Chrysler Space Division, Pneumatics Unit Hangar D; the AF Chemical Laboratory, Patrick AFB; Douglas Aircraft Company, Materials Research and Process Methods, Hangar M; and Boeing Missiles and Space Co, Splinter Village. These were all the groups and functions identified as requiring, specifying, performing, or documenting sampling operations at KSC for the Complex 34, 37, and 39 programs and the laboratories responsible for analyzing the samples. From all of these visits, however, one set of sampling procedures was obtained. These were preliminary drafts and were consequently marked as not approved for use. They are for the sampling of LO_2, LN_2, RP-1, N_2O_4, and hydrazine fuels only.

Since they were preliminary drafts, they are somewhat less than specific with regard to exact equipment definition. However, the criteria and recommended equipment from this study will be compared with what is the most probable specific form of the equipment therein described.

During the KSC survey, Complexes 34 and 37 were being extensively modified, and no sampling operations were in process nor were they at Complex 39, which was under construction. Additionally, the functions and capabilities of sampling and analysis remained with Pan American Aviation and the Air Force Laboratories, because the NASA Laboratories and sampling organizations were still being formed and equipped.

Thus, the requirement to "investigate the present sampling techniques, procedures and equipment utilized at the launch facilities during both the supply and the actual loading operations" could not be accomplished directly.

Instead, the responsible individuals of the functions and at the locations identified were questioned as to what methods other organizations had used at these facilities in the past, what they thought the procedure would be now, what they thought it should be, and, if they were responsible for this determination, what they intended it to be. This information, supplemented by the preliminary procedures supplied by the Bendix Organization, provides the basis for the recommended sampling operations to be used at Complexes 34, 37, and 39 for the Saturn IB, Saturn V, and Apollo programs.

2. LO_2, LN_2, and LH_2

a. Present Practice

Industry presently uses the cryogenic sampler (shown in Fig. V-3 and described below) for parameters other than particles and membrane filtration into or from a dewar flask for particle content. The cryogenic sampler described in MIL-S-27626 is essentially a liquid cryogen retention cup that is cooled to the temperature of the boiling cryogen by flowing of the cryogen around it and exhausting to waste. The retained volume of liquid is calculated in proportion to the total ullage volume of the sampler, so a predictable and acceptable gas pressure is produced by total vaporization and warmup to ambient of the contents. Without this device, either analysis of the boiloff from the cryogen sample occurs before vaporization is complete or the ullage analyzed after warmup to ambient does not contain the entire vaporization product of the sample. Neither condition represents the true concentration of the contaminant with respect to the total fluid mass.

WSTF plans to use continuous vaporizers installed in the fuel cell LO_2 transfer system for purity sampling. No particle sampling is contemplated if this utilization is realized.

b. Recommendations

Recommendations concerning purity/impurity sampling are presented in the following paragraphs.

Design Criteria - The tools used for sampling LO_2, LN_2, and LH_2 for contaminants other than ambient temperature solids shall have the capability of taking a quantity of the cryogenic fluid, representative of the fluid stream passing the sampling point during sample withdrawal from the system, without contaminant enrichment of the surface of the cryogen chamber or of the gas chamber of the sampling device during temperature conditioning or during sample capture. They shall completely confine the total ambient-temperature gaseous product of this sampled cryogenic fluid while causing this vaporization to proceed and to be completed within 30 min after sample taking with no other energy input required for vaporization than heat flux from the ambient surroundings normal to shirt-sleeve environments.

The device shall capture the cryogen in an amount necessary to produce not less than four liters of pressurized gas at a pressure not less than 300 psi at normal room temperature. It shall produce this amount by the means established and within the time limit established, and shall be capable of delivery of this gaseous product at a rate not less than 5 scfm by means of the opening of only one simple shutoff valve that is integral with the sampling device.

The temperature-conditioning of the cryogenic sample entrapment chamber preparatory to sample capture shall be achieved solely by flowing the operational fluid to be sampled through the sampling device before sample capture. This temperature-conditioning fluid shall not enter the gaseous sample chamber(s) of the sampling device, nor shall it enter the cryogenic fluid entrapment portion(s) of the sampling device except during liquid capture, which shall occur only when the temperature of the cryogenic fluid entrapment chamber is at or below the boiling temperature of the operational fluid being sampled at the pressure of the sampled stream.

Not more than two ports and pressure caps integral with the sampling device shall be necessary to control the flow of temperature-conditioning fluid through the sampling device, and not more than one simple shutoff valve, integral with the sampling device shall be required to initiate, permit, and terminate the operation of sample capture.

These valves and the confining volumes of the sampling device they service shall have the capability of providing all valve functions, and shall have wall and fixture strength and resistance to gaseous leakage necessary to evacuate all sample collecting and containing volumes of the sampling device to an absolute pressure of less than 0.1 torr.

They shall maintain this quality of vacuum for not less than 12 hours, while the sampling device is exposed to an exterior temperature of from -40 to 150°F, a barometric pressure of from 11 to 15 psia, and nominal handling and transport, providing the valve settings remain undisturbed.

Where these valves are of combined purpose, that is, where they fulfill more than one of the functions stipulated, they may require only one setting in addition to the full open and full closed positions for each additional function. Otherwise no adjustment of these valves shall be required during the sampling operation other than fully opening and fully closing them to exercise their design functions. Therefore, not more than two valves shall be necessary to operate the sampling device during cleaning, bakeout, evacuation, setup, temperature-conditioning, sample-taking, sample-vaporization, warmup to ambient, and gaseous sample-product delivery.

The device and flow conducting accessories shall be capable of withstanding continuous exposure at 250°F without deterioration of any constituent material or loss of any required function.

The device, with accessories, shall be capable of being set up and temperature-conditioned, receiving a cryogenic fluid sample, and commencing contained-vaporization of the sample within 15 min after arrival at any LO_2 or LN_2 system sampling point and within 30 min after arrival at any LH_2 system sampling point when system pressures are at least 10 psig and when all sampling operations required downstream (outboard) of the sampling point are performed by only one technician.

The sampling device kit shall include, as accessories, flexible ducts (½-in. nominal ID), with AN connections to provide sample flow from the system sampling point to the sampling device, and as required by safety considerations pertinent to the sampling point for LO_2 and LN_2 and in all cases when sampling LH_2, to conduct the vaporized and liquid temperature-conditioning stream and sample overflow to vent or waste system connections.

All operational and sample fluid contacting surfaces of the sampling kit shall be capable of immersion in or exposure to such halogenated solvents as trichloroethylene and trichlorotrifluoroethane for an unlimited time in the assembled or disassembled condition with only such deterioration of material or loss of required function (on reassembly) as may be easily restored by the application of lubricant inert to the operational fluid and readily available commercially.

The sampling kit, consisting of the sampling device and all accessories necessary to take a cryogenic fluid sample from one system sampling point, shall be transportable as not more than four disconnected items having a total volume not exceeding 3 cu ft, and a total weight not exceeding 35 lb. The device shall perform its required functions at the site of sampling with no utility or commodity furnished to it other than the operational fluid being sampled.

The system sample point from which the operational fluid sample is taken will be, in every instance, the isokinetic flow sample output of a Wyle Dynamic Fluid Sampler (DFS) System, Fig. V-4 thru V-13, which is permanently installed in the operational transfer system in the main transfer lines or in a recirculation loop from storage vessels unless the entire operational stream is diverted through the sampling device, in which event the DFS is unnecessary.

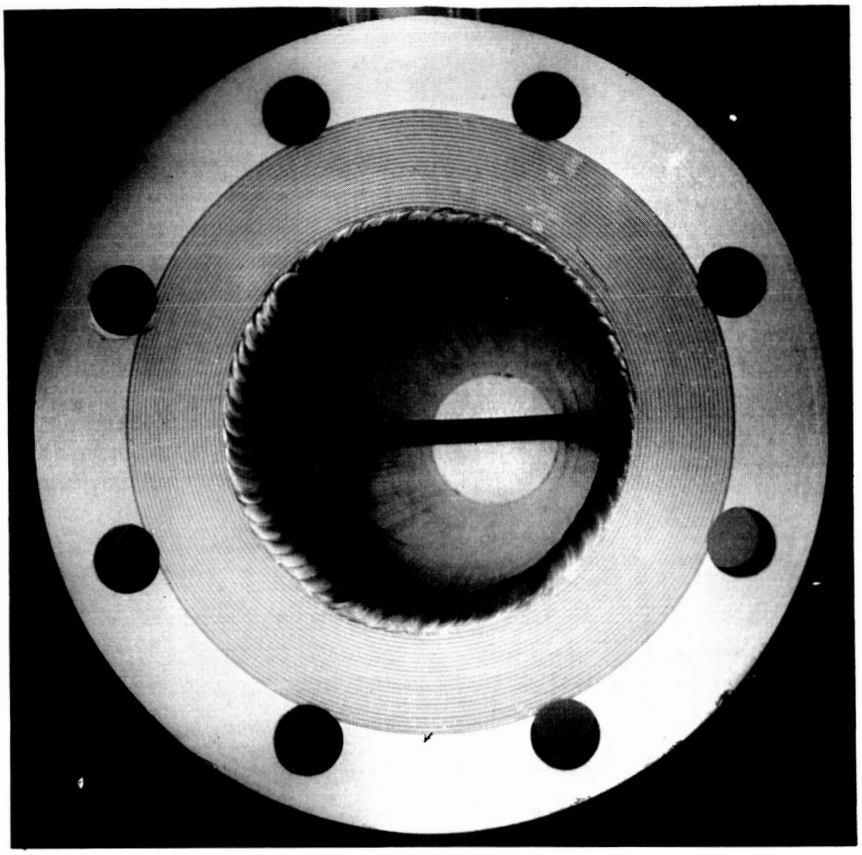

Fig. V-4 Wyle Dynamic Fluid Sampler, End View

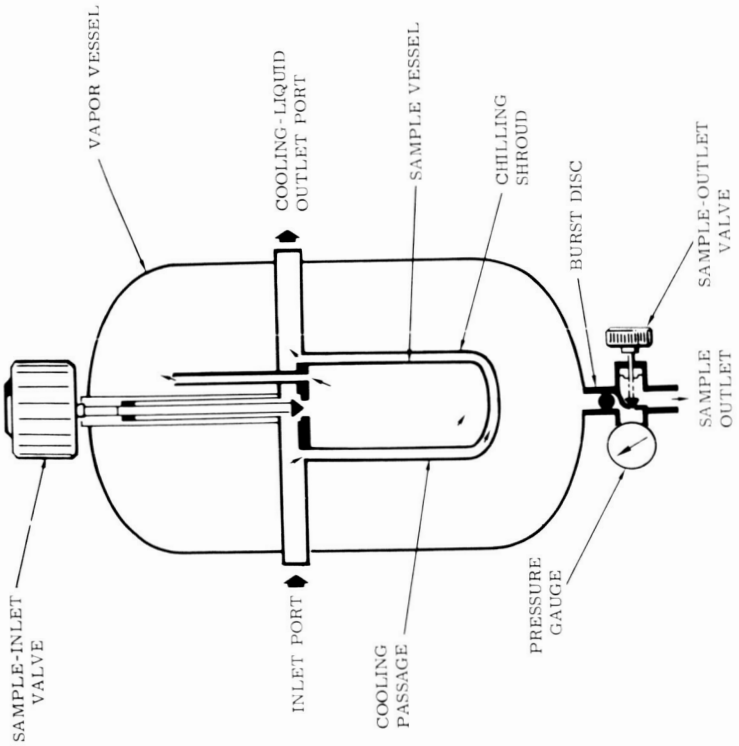

Fig. V-3 Cryogenic Sampler Schematic

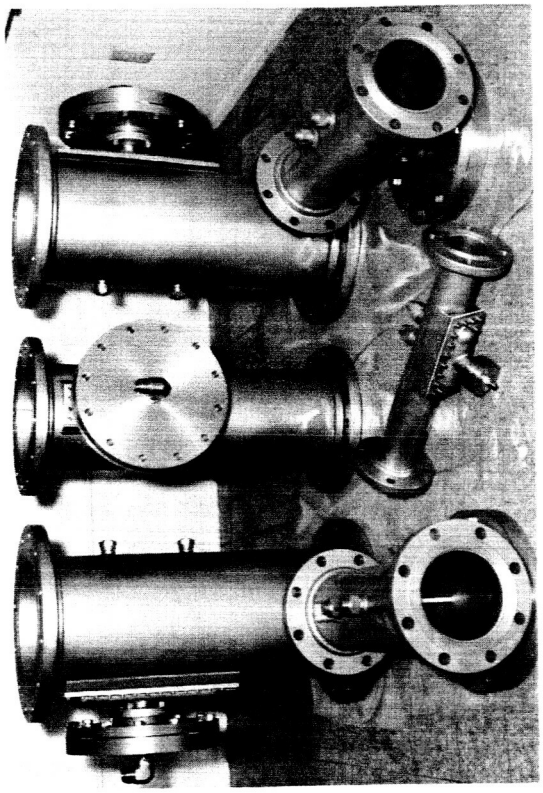

Fig. V-6 Wyle Dynamic Fluid Samplers

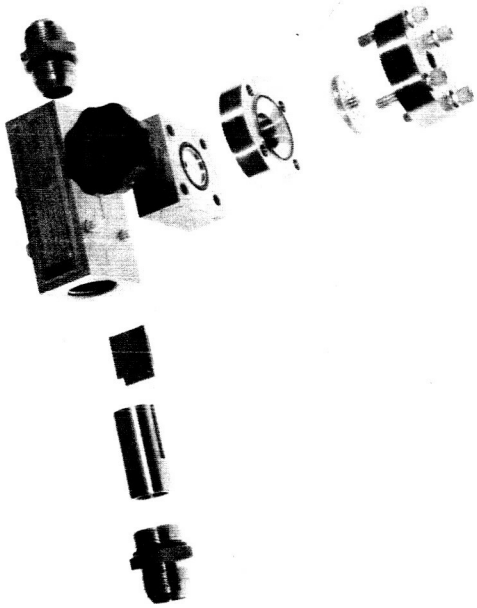

Fig. V-7 Wyle Dynamic Fluid Sampler, Exploded View

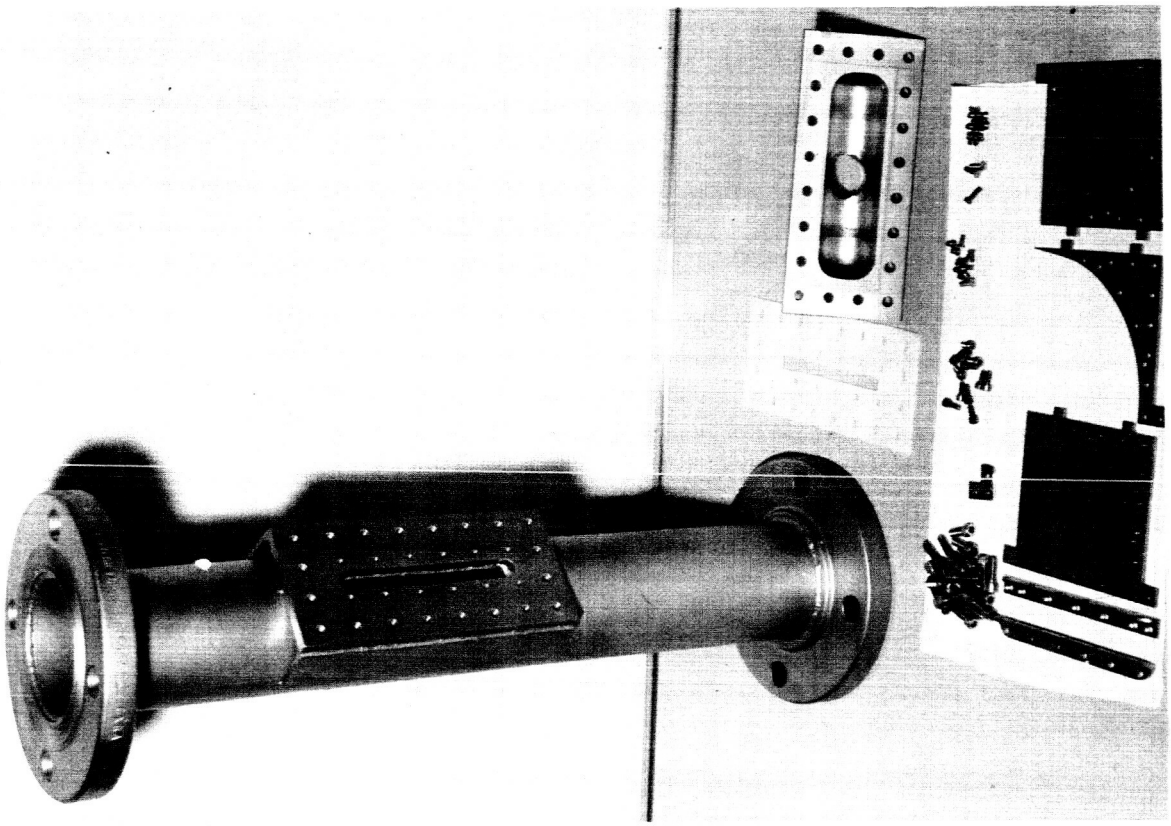

Fig. V-5 Wyle Dynamic Fluid Sampler, Partially Disassembled

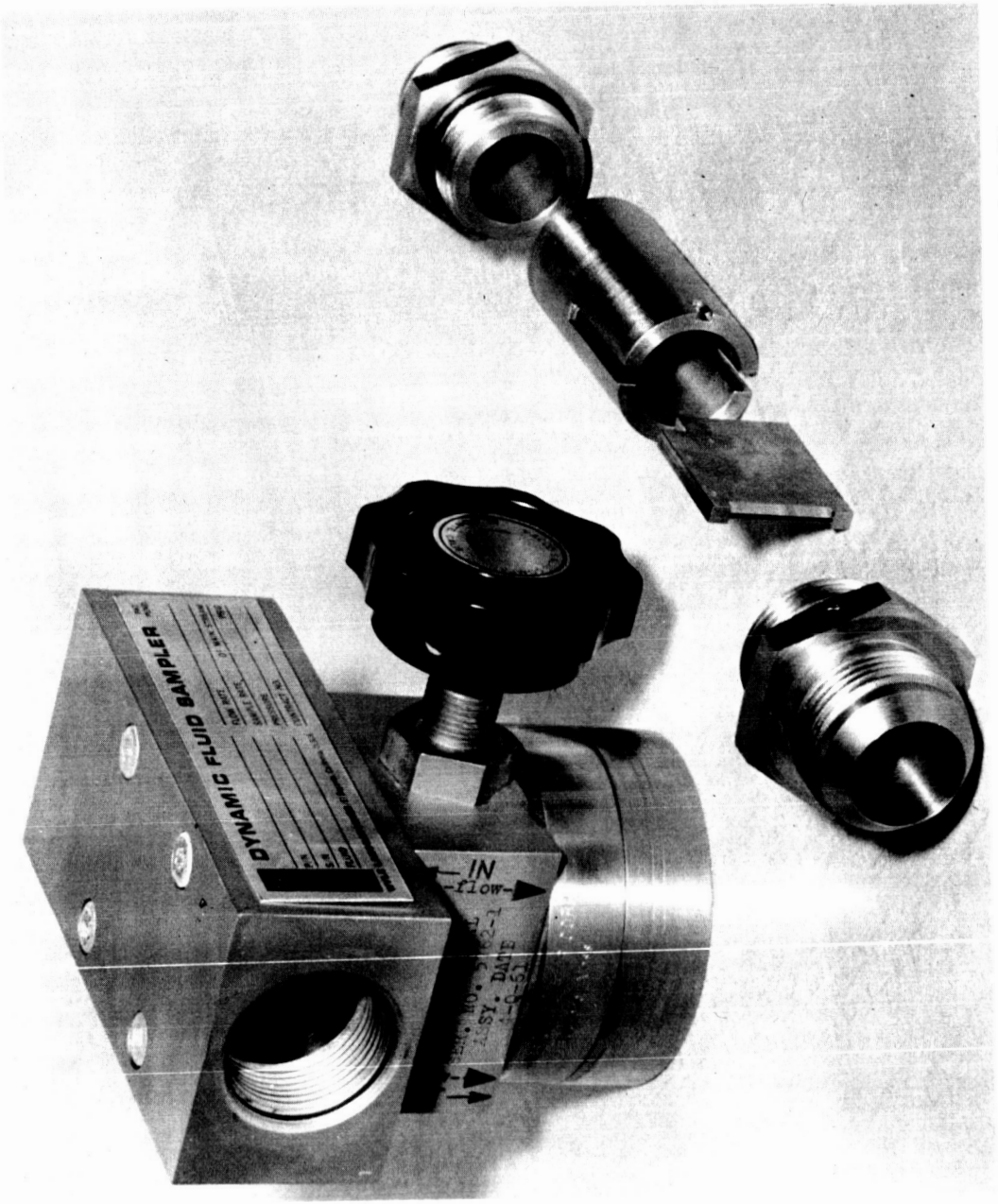

Fig. V-8 Wyle Dynamic Fluid Sampler, Partially Exploded View

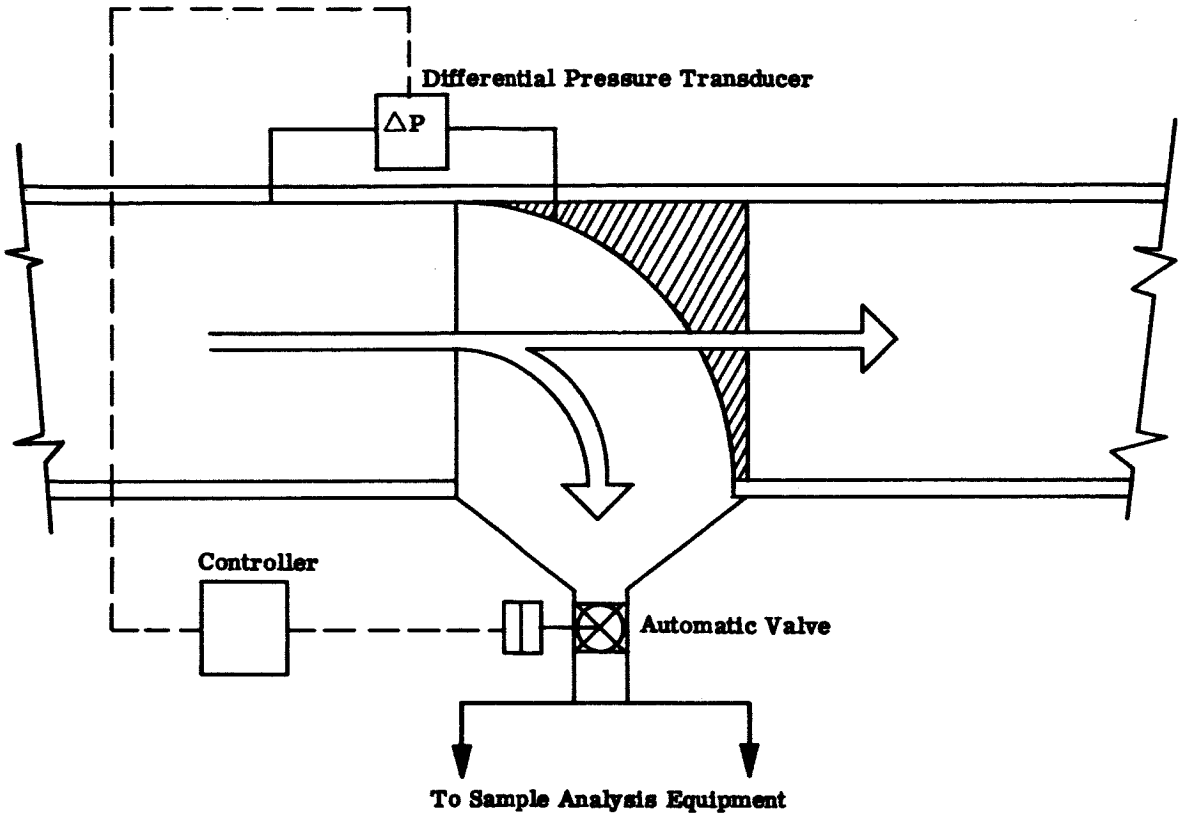

GENERAL NOTES

1. Type of end connections optional.

2. Line sizes from 1 inch to 14 inch diameter or larger for use in gas, cryogenic, and non-cryogenic systems.

3. Working pressure and burst pressure of the Dynamic Fluid Sampler will be consistent with the piping system in which it is installed.

4. The Dynamic Fluid Sampler will be of the same line size as the system in which it is installed.

SPECIFIC NOTES

1. The differential pressure transducer senses the difference between the static line pressure and the total pressure within the sample withdrawal mechanism. Therefore, when the differential pressure is zero, the mainstream velocity and the sample velocity within the sample withdrawal mechanism are equal and isokinetic flow is attained.

2. Isokinetic flow is established by automatic adjustment of the sample flow rate by means of the controller/automatic valve until the "Pitot" differential pressure is zero, i.e., the controller seeks to control to zero differential pressure.

3. The automatic control sample flow rate allows variations in mainstream flow rates over a large range (10 to 1) while maintaining isokinetic sampling conditions.

Fig. V-9 Automatic Inline Sampling, Wyle Dynamic Fluid Sampler

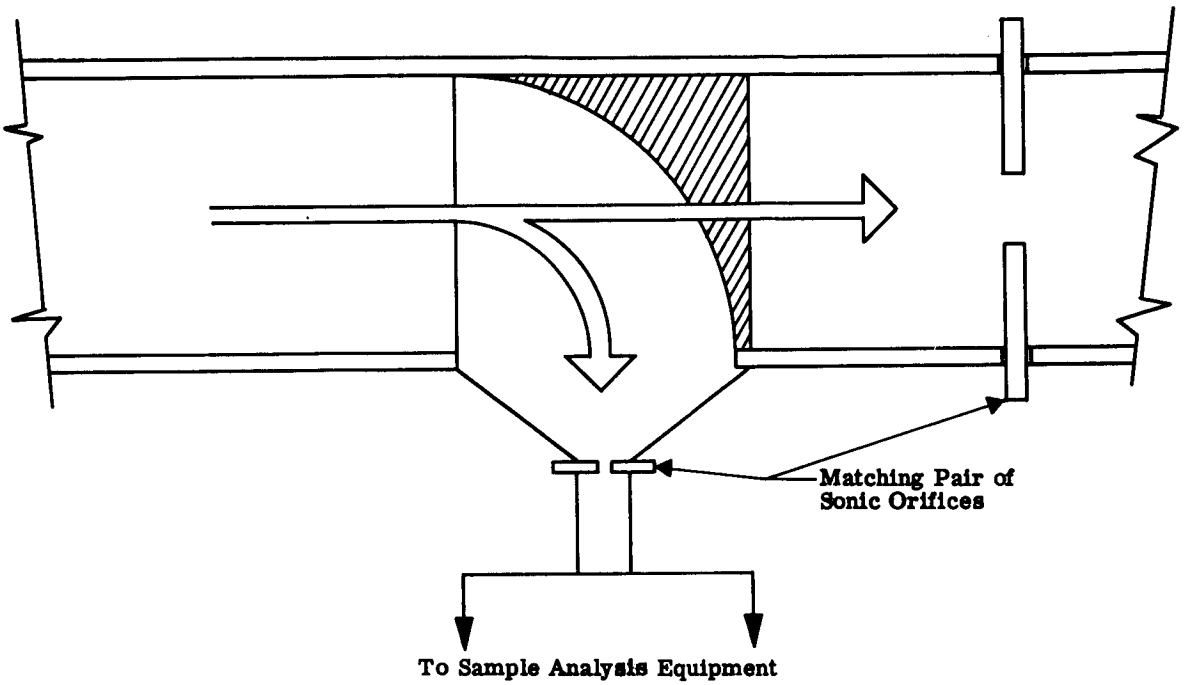

GENERAL NOTES

1. Type of end connections optional.

2. Line sizes from 1 inch to 14 inch diameter or larger for use in gas, cryogenic, and non-cryogenic systems.

3. Working pressure and burst pressure of the Dynamic Fluid Sampler will be consistent with the piping system in which it is installed.

4. The Dynamic Fluid Sampler will be of the same line size as the system in which it is installed.

SPECIFIC NOTES

1. Isokinetic conditions are controlled through the use of a matched pair of sonic orifices in the mainstream and sample lines.

2. The Dynamic Fluid Sampler may be equipped with additional orifice pairs such that the basic instrument may be used for a very wide range of pressures, flow rates, and gases.

Fig. V-10 Gas System Blowdown, Wyle Dynamic Fluid Sampler

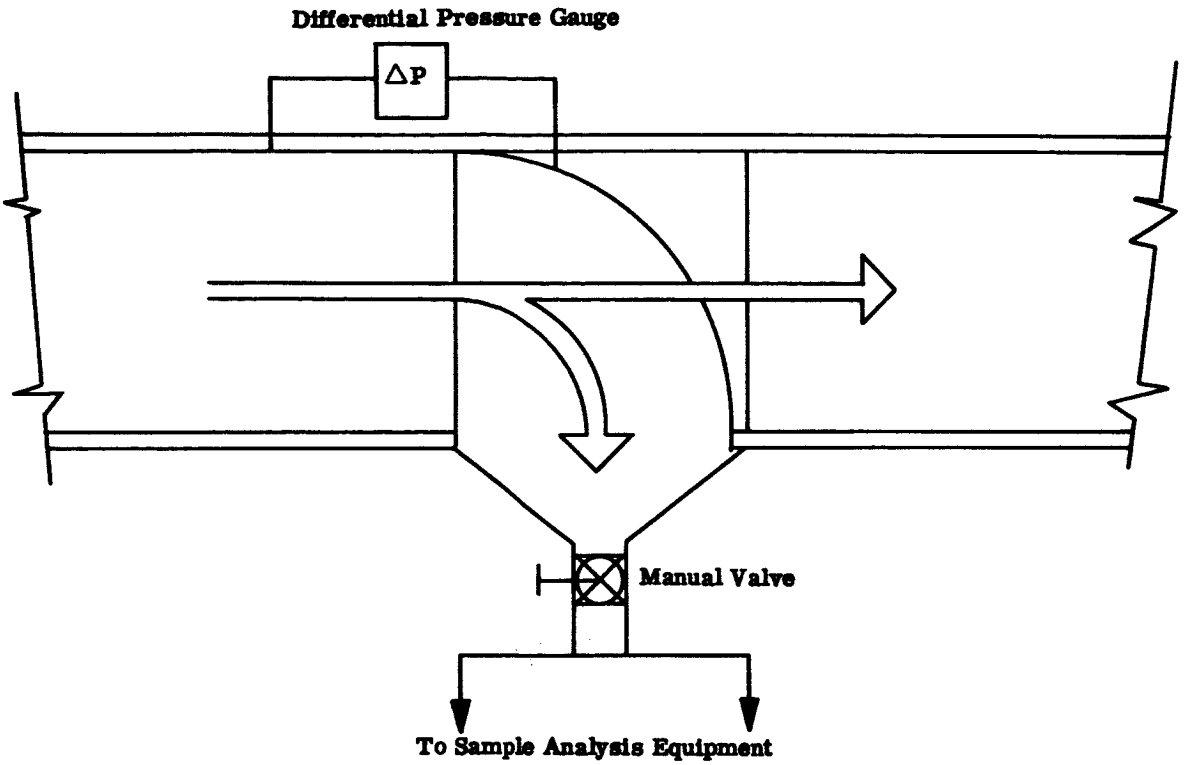

GENERAL NOTES

1. Type of end connections optional.

2. Line sizes from 1 inch to 14 inch diameter or larger for use in gas, cryogenic, and non-cryogenic systems.

3. Working pressure and burst pressure of the Dynamic Fluid Sampler will be consistent with the piping system in which it is installed.

4. The Dynamic Fluid Sampler will be of the same line size as the system in which it is installed.

SPECIFIC NOTES

1. The differential pressure transducer senses the difference between the static line pressure and the total pressure within the sample withdrawal mechanism. Therefore, when the differential pressure is zero, the mainstream velocity and the sample velocity within the sample withdrawal mechanism are equal and isokinetic flow is attained.

2. Isokinetic flow is established by manually adjusting the sample flow rate until the "Pitot" differential pressure is zero.

3. The manual control of the sample flow rate allows variations in mainstream flow rates over a large range (10 to 1) while maintaining isokinetic sampling conditions.

Fig. V-11 Manual Inline Sampling, Wyle Dynamic Fluid Sampler

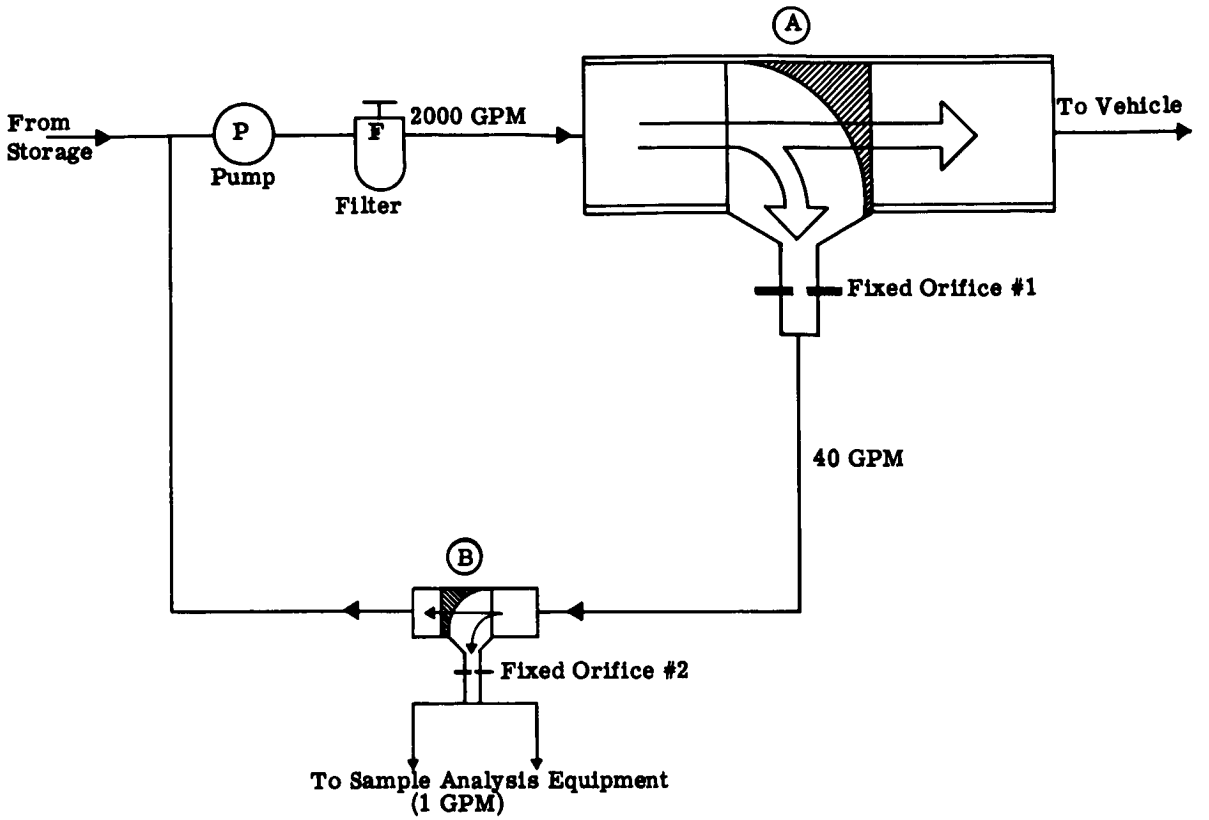

GENERAL NOTES

1. Type of end connections optional.

2. Line sizes from 1 inch to 14 inch diameter or larger for use in gas, cryogenic, and non-cryogenic systems.

3. Working pressure and burst pressure of the Dynamic Fluid Sampler will be consistent with the piping system in which it is installed.

4. The Dynamic Fluid Sampler will be of the same line size as the system in which it is installed. The enlarged representation of the sampler in this drawing is for clarity only.

SPECIFIC NOTES

1. Dynamic Fluid Samplers to be permanently installed and designed for operation with a fixed pressure and flow rate from the pump.

2. Dynamic Fluid Sampler "A" will be 8-inch line size and will be designed to remove 40 gpm (2%) of the mainstream flow for return to the low pressure point at the pump inlet.

3. Fixed Orifice Number 1 will be designed to allow the prescribed 40 gpm of flow from Dynamic Fluid Sampler "A" to the pump inlet.

4. Dynamic Fluid Sampler "B" will be 1-inch line size and will be designed to remove 1 gpm (2.5%) of the mainstream flow for transmission to the analysis equipment.

5. Fixed Orifice Number 2 will be designed to allow the prescribed 1 gpm of flow from Dynamic Fluid Sampler "B" to the analysis equipment.

Fig. V-12 RP-1 Fill System, Wyle Dynamic Fluid Sampler

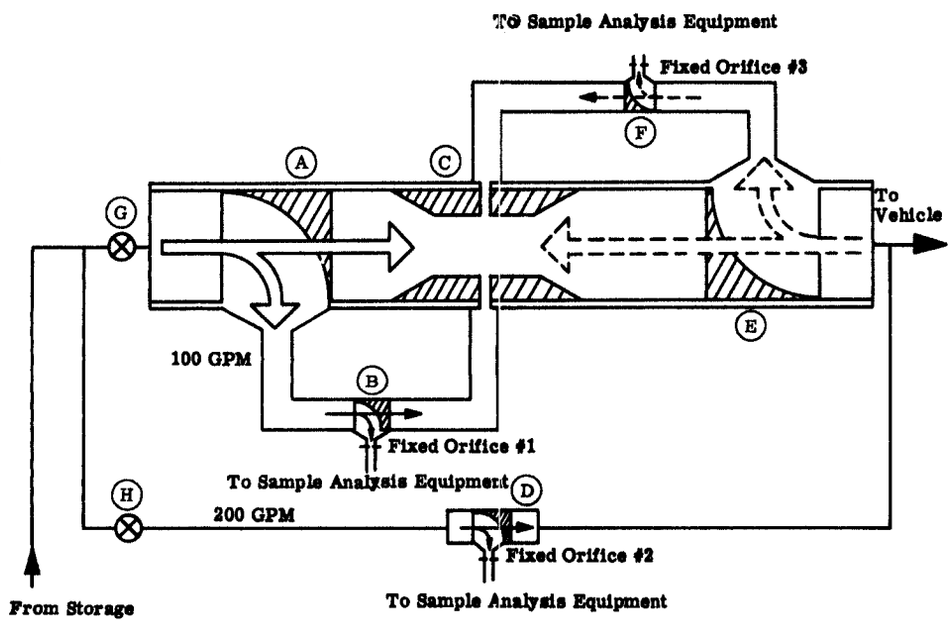

Fig. V-13 Liquid Hydrogen Fill, Topping and Drain - S-II Storage
Wyle Dynamic Fluid Sampler

GENERAL NOTES

1. Type of end connections optional.

2. Line sizes from 1 inch to 14 inch diameter or larger for use in gas, cryogenic, and non-cryogenic systems.

3. Working pressure and burst pressure of the Dynamic Fluid Sampler will be consistent with the piping system in which it is installed.

4. The Dynamic Fluid Sampler will be of the same line size as the system in which it is installed. The enlarged representation of the sampler in this drawing is for clarity only.

SPECIFIC NOTES

1. Filling Operation at 10,000 gpm

   a. During fill at 10,000 gpm, Valve H is closed and Valve G is open.

   b. As fluid passes Dynamic Fluid Sampler "A", 100 gpm (1%) of mainstream fluid is removed and transmitted through Dynamic Fluid Sampler "B" to the low pressure point created at the throat of Venturi C.

   c. Venturi C will be designed such that it will create a low pressure area sufficient to compensate for the pressure drop in Dynamic Fluid Sampler "B" and the line between Dynamic Fluid Sampler "A" and the venturi.

   d. As the fluid passes Dynamic Fluid Sampler "B", 1 gpm (1%) of the mainstream fluid is withdrawn for sample analysis. The sample flow rate of 1 gpm is controlled by Fixed Orifice Number 1.

2. Topping Operation at 200 gpm

   a. During topping at 200 gpm, Valve G is closed and Valve H is open.

   b. As the fluid passes Dynamic Fluid Sampler "D", 1 gpm (0.5%) of the mainstream fluid is withdrawn for sample analysis. The sample flow rate of 1 gpm is controlled by Fixed Orifice Number 2.

3. Draining Operation at 10,000 gpm

   a. During the draining operation at 10,000 gpm, Valve H is closed and Valve G is open.

   b. As fluid passes Dynamic Fluid Sampler "E", 100 gpm (1%) of mainstream fluid is removed and transmitted through Dynamic Fluid Sampler "F" to the low pressure point created at the throat of Venturi C.

   c. Venturi C will be designed such that it will create a low pressure area sufficient to compensate for the pressure drop in Dynamic Fluid Sampler "F" and the line between Dynamic Fluid Sampler "E" and the venturi.

   d. As the fluid passes Dynamic Fluid Sampler "F", 1 gpm (1%) of the mainstream fluid is withdrawn for sample analysis. The sample flow rate of 1 gpm is controlled by Fixed Orifice Number 3.

Specific Equipment Recommendations, Existent - For LN_2 and LO_2, Cosmodyne CS 4.4 cryogenic sampler P/N 2700300-1, empty weight - 20 lb, size 8x8x17 in., cost - $950.00 each in lots of 12; 6-ft hose, Cosmodyne 2600057-5 - $65.00.

For LH_2, Cosmodyne CS 4.4H cryogenic sampler, P/N 2700300-3, empty weight - 20 lb, size - 8x8x17 in., cost - $995.00 each in lots of 12; 6-ft insulated hose, Cosmodyne 2601191-1 - $225.00.

Wyle Dynamic Fluid Sampler, (Fig. V-4 thru V-13), specific configurations to depend on sampling point location.

Specific Equipment Recommendation, Developmental - For LN_2, LO_2, and LH_2, Cosmodyne CS-5.0, 5-liter capacity, size - 8.7x8.7x12.5 in., 150-standard-liter capacity at 30 atmospheres pressure. One control valve only, no carrying case necessary, weight - 20 lb with hose; estimated cost - $900.00 to $950.00 each in lots of 12. (See Fig. V-1 thru V-3.)

General Operating Procedure - The purity/impurity sampling tool shall be connected to the system sampling point by the flexible tubing provided in the sampling kit, the vaporized-product portion of the sampler having previously been purged with the fluid to be sampled and evacuated to less than 0.1 torr, absolute pressure. The operational fluid shall be flowed through the heat exchange conduits within the sampler to absorb heat from the cryogenic-sample retention chamber until the temperature of the latter is at or below the boiling-point temperature of the operational fluid being sampled at the pressure existing in the sampler. This could be a few psi above ambient due to pressure drop through the disposal lines. This condition will be indicated by a steady stream of cryogenic liquid issuing from the cooling liquid outlet port of the sampler, which will be directly visible when the effluent is not conducted to waste, and shall be indicated by temperature-sensing devices installed at the cooling liquid outlet of the sampler when the sampler effluent is conducted to a waste or vent system. A valve shall then be opened to admit the operational fluid to the cryogenic fluid entrapment chamber and closed when this operation is completed.

The cryogenic fluid entrapment chamber has fluid access to the expansion chamber, so the sampler is secured for vaporization and transport only by replacement of the dust covers on the cooling liquid inlet and outlet ports and replacement of the transport cover.

The purity/impurity samplers are to be assigned to the use of sampling only one fluid in their operational life and the designation of this fluid is to be prominently and permanently marked on the exterior of the sampler.

Following initial procurement, any chemical cleaning, and before use, the sampler shall be baked at 250°F for not less than 12 hr while maintaining a residual pressure of not more than 10^{-7} torr applied through an LN_2 cold trap, shall be repressurized with the fluid for which it is to be used, and shall be maintained with at least one atmosphere positive pressure of this fluid internally at all times when it is not evacuated preparatory to sample taking for the term of its operationl life. The evacuation and bakeout process shall be repeated if the sampler is found to have experienced any of the following:

1) An out-of-specification sample;

2) Exposure to the atmosphere;

3) Introduction of any fluid other than that to which it is assigned.

For specific step-by-step operational procedures see Cosmodyne Instruction Manual HB-1057.

Recommendations concerning ambient temperature solids (particulate) sampling are presented in the following paragraphs.

<u>Design Criteria</u> - The sampling tool used for particle sampling of LO_2, LN_2, and LH_2 shall have the capability of being plumbed to the system sampling point, being purged with the operational fluid and its gaseous product to dislodge all significant particulate contamination from the sampling device and connecting tubing upstream of the filtration/particle counting surface, and, by this means, having this material deposited on this surface for a microscopic precount of the particle size and population deposited thereon. The sampling device shall provide such optical capability, including artifical illumination of

the counting surface, that this precount in terms of particle contamination levels of interest to the operational fluid may be performed in-place, on-site, and without disconnection of the tool from the sampling point.

While the sampling device is still connected to the sampling point, it shall be possible to detach its microscope, and immerse the device in the operational fluid or a substitute fluid of lower boiling point until the particle-collecting surface, its holding chamber, and all flow-contacting surfaces between the sampling point and the particle-collecting surface are at or below the temperature of the boiling point of the operational fluid at normal atmospheric pressure. The mechanical requirements to provide this temperature conditioning and all means necessary to provide it, with the single exception of the cryogenic conditioning fluid itself, shall be a portion of the sampling device, either integral with it or as a readily attachable accessory constituting a portion of the sampling kit.

The device shall then, while in this temperature condition, be capable of conducting at least 1 gpm of the operational fluid through the particle-collecting surface in a manner to present the collected particle matter for ready microscopic observation at 40 to 100X without the necessity of changing the focus to examine, and measure microscopically, all collected particulates. It shall be capable of sustaining this minimal flow rate through the filtration medium for an indefinite period at a Δp not exceeding 30 psi until 30 mg of particulates, having longest dimensions of 2 to 10 μ and a density of 2.5 to 3.5 gm/cc, have been deposited on the filtration/counting surface. It shall be capable of indefinitely sustaining 450 psia internal hydrostatic pressure of the cryogenic operational fluid without deformation or loss of functions. The device shall provide integral strongback-type clamps to provide mechanical support to the optical window during sample flow to resist hydrostatic pressure.

The device shall then be capable of providing warmup of the optical window and of the filtration/counting surface to ambient temperature and a condensation-free condition, of reattachment of the counting microscope and of microscopic examination and size-determination of the particulates retained on the filtration/counting surface, in terms of the dimensional ranges and population limits as given in the applicable specifications, to a dimensional accu-

racy of ± 7 μ, while remaining connected to the sampling point and while remaining in the same physical location and orientation as it occupied during and since the sample filtration operation. This orientation shall ensure that the upstream face of the filtration/counting surface does not vary by more than an angle of 35 deg at any time from purge and precount filtration until particulate size and count determinations are completed.

The device shall provide the capability of determining the total filterable solids mass quantity by providing a filtration/counting surface medium that can be weighed to an accuracy of ± 0.0005 gm, before and after sample particulate retention, on standard laboratory analytical balances. Removal, weighing, and replacement of the filter/countering surface medium shall require the attention of only one technician for not longer than five min, except for any oven drying and desiccation operations that must be performed exterior to the sampling device.

All surfaces of the sampling kit that contact operational fluid shall be capable of immersion in or exposure to such halogenated solvents as trichloroethylene and trichlorotrifluoroethane in the assembled or in the disassembled condition for an unlimited time at each occurrence and of being baked in an oven at 250°F for an unlimited time at each occurrence with no deterioration of any constituent material or loss of any required function other than can be easily restored by the application of lubricant inert to the operational fluid and readily available commercially.

The device shall require no other commodities than the operational fluid being sampled and 110/220 ac electrical power at the location of sampling to perform its designed functions.

The device shall be capable of performing the following required functions, as tabulated below, within the time limits listed, individually and cumulatively when operated by one technician.

Function	Time (min)
Filtration/Counting Surface Installation	2.0
Hookup to Sampling Point and to Waste Disposal	0.5
Purge Flow (Operational Fluid)	2.5
Inert Gas Purge and Warmup to Frost-Free/Condensate-Free Condition	1.0
Precount (Includes Microscope Attachment), Full-Field Count, and Size Determination	4.0
Cryogenic Cooldown (Includes Microscope Removal And Attachment of Dewar Envelope)	6.0
Sample Flow	5.0
Inert Gas Purge and Warmup to Ambient (Includes Detachment of Dewar Envelope)	3.0
Full-Field Count (Includes Attachment of Microscope)	4.0
Removal of Filtration/Counting Surface Medium to Petri Dish and Replacement (If TFS Required)	2.0
Total Sample, Count, And Recycle	30.0

The sampling device with its detachable microscope, the flexible tubing to conduct the sample of operational fluid for purging, temperature conditioning, and sample filtration from the operational system sampling point to the sampling device and to conduct the sampler effluent to safe waste disposal, the detachable dewar envelope for the sampling device, the inert gas purge supply, the heaters and heat exchangers, the fluid-conducting tubing and valving, and all other accessory items necessary to the sampling function of the device shall be a part of one easily transportable kit, having a total volume not exceeding two cu ft, and weighing not more than 55 lb in transportable kit form.

The system sample point from which the operational fluid sample is taken will be, in every instance, the isokinetic flow sample output of a Wyle wedge that is permanently installed in the operational transfer system in the main transfer lines or in a recirculation loop from storage vessels. If the entire operational stream is directed through the sampling device, the wedge sampler is unnecessary.

Specific Equipment Recommendations - Since the in-line filter holder and counter (ILFHC) is conceptual for this application, no specific equipment recommendations are appropriate. However, schematic diagrams and a description are contained in the appendix.

General Operating Procedure - The particulate sampling tool will be connected to the system sampling point by a flexible duct provided in the kit and to the waste or vent system as necessary. The system sampling valve will be opened to purge all flow-contacting surfaces upstream of the filtration/counting surfaces of particles and to deposit these on the counting surface. The sampling tool will then be warmed to condensation-free condition by heaters integral with the sampling tool and by a hot inert gas purge. The microscope will then be attached to the tool and a precount made of the particle matter retained on the filtration/counting surface. The microscope will then be detached from the sampling tool, and the tool cooled to the temperature of the boiling point of the operational fluid at the pressure of the sampling point by flowing the operational fluid around, but not through, the tool while the tool is enclosed in an insulated chamber. The operational fluid will then be flowed through the tool until 5 gal. of the operational fluid have passed through the filtration medium. The cooling liquid and insulated envelope shall then be removed from the tool, the tool warmed to a condensation-free condition by the same means as previously identified, the microscope reattached, and a full-field count made of the retained particulates at 40 to 100X. The precount is subtracted from the final count to obtain the true count. If total filterable solids determination is required, the filter medium is removed and placed in a petri dish. The dish is returned to the laboratory for weighing or is reweighed on an electro-balance at the site of sampling. In the latter case, a new filter medium is installed in the tool at the site of sampling, and the tool is ready for immediate resampling as desired.

Where safety conditions permit, the flow measurement of the sample shall be by discharging into a precooled graduated dewar and sensing the overflow by temperature indication. Where this is impractical, total flow shall be measured by differential pressure across a control orifice.

Only laboratory-trained microscopists shall perform the microscopic counts required by this device in the field. It is not the intent of this method nor is it practicable to make microscopists of field inspectors or sampling personnel by means of this device.

In addition, because the qualitative and diagnostic information that it provides is an important advantage of its use over that of the zone-sensing devices, a professional microscopist only should perform the count.

c. Comparison of Recommendations With Those Used At KSC

Cryogenic purity samples will be taken in the Cosmodyne CS 4.4 sampler at KSC. The procedure for utilization in the KSC documents is taken verbatim from the Cosmodyne instruction manual and cannot be improved for effective and efficient use of the equipment.

The design criteria, equipment and method agree with the existing KSC method, insofar as it applies to the proper capture and retention of the sample once it has left the system sampling point and is, in fact, a sample stream only. The criteria and specific equipment recommendations, however, are based on the premise that purity sampling in the cryogenic-scope fluids is in reality particulate sampling in many instances because the impurities are frozen out in discrete particles of density and flow characteristics differing from that of the carrier fluid. It is concluded, therefore, that purity samples of cryogenic fluids must be dynamic, not static, samples to be valid and that they must be taken from a sample stream that is the isokinetic flow product of such a dynamic sampler of proven capability as the Wyle Laboratories DFS. The existing sampling at Complexes 34, 37, and 39 is not dynamic and is by simple side tap.

The sampling procedure specifically excludes its use for sampling LH_2, and states that a separate procedure will be provided for this fluid. This procedure was not available. However, if it provides for the use of the CS-4.4H sampler and again uses the manufacturer's procedure for the equipment as in the case of the CS4.4, the equipment and method are considered to be satisfactory. Nothing disclosed by the surveys of equipment manufacturers and launch facility/test facility users offered any methods or concepts that would significantly improve them, except for the method of sample withdrawal from the operational system as treated herein for LO_2 and LN_2 sampling. The requirement for isokinetic sampling of impurities in LH_2

is more important than that for LO_2 and LN_2 because of the lower density, viscosity, and temperature of the former, causing more impurities to exist as solids and providing less efficient transport and homogenization for them.

If, on the other hand, this procedure provides, or will provide, for the use of one of the vacuum-jacketed samplers with bayonette type disconnects and vacuum-jacketed hose, the results of this study indicate that such equipment is neither necessary nor desirable and represents an unwarranted expense for procurement and maintenance. The major manufacturer of this type of sampler, the CS 4.4HB, has stopped manufacturing it for this reason.

Particle sampling in the cryogenic fluids is an area in which the greatest disagreement exists between the design criteria and specific equipment recommendations of this study and the existing methods of Complexes 34, 37, and 39.

Fuel Section Propellants Branch, NASA-KSC, stated that LH_2 particle samples are taken in an open pyrex beaker from the storage tank and that no samples are taken from the transfer system itself, static or dynamic. The LO_2 area of Complex 37 stated the same concerning LO_2, with the exception that a dewar is also used for particle sampling.

Most of the industry uses equivalent methods of particle sampling as is shown in the compilation chart for Sampling Equipment and Methods (Fig. II-1 of this report), but no one tests this effluent to any level as stringent as the particle size criteria of NASA-KSC. Most, in fact, either do not sample particulates at all, or else determine total filterable solids by mass quantity only. The remainder operate to particulate criteria sets that have a generous built-in allowance for sampling error.

NASA-KSC, therefore, has a very special problem if it intends to maintain the 175- or 100-μ absolute longest particle dimension limit in practice in the operational systems.

On the basis of the Martin Company's program experience, and the concensus of all program contractors, military

and NASA, with whom the problem has been discussed, it is recommended that NASA-KSC maintain absolute particulate dimensional limits in the operational fluid systems of the Saturn IB, Saturn V, and Apollo programs. (These limits are, in essence, an order of magnitude more stringent than those for the first- and second-generation liquid-fueled vehicle programs.) The operational accomplishment of these orders of particulate control in a program of this scope will cause these same methods to be implemented in the smaller programs.

It must be realized, however, that NASA essentially stands alone in this regard and that since NASA-KSC's particulate criteria cannot compare to those of the industry (including some of NASA-KSC's own subcontractors), neither can NASA-KSC's sampling methods be validly compared to theirs.

Instead, the Saturn programs must initiate closed system particulate sampling, a third-generation sampling method, to implement their third-generation particle criteria. The alternative is to back off from absolute particle and fiber limits in the few hundreds of microns, because open-container sampling from operational systems in uncontrolled environments is not going to provide this capability.

The ILFHC is the device recommended to provide this third-generation capability by incorporating the means of accounting for and subtracting the quantitative effect of all particulate contamination originating extraneous to the operational fluid up to and including the period of sample flow, and of then eliminating the contribution of extraneous material that frequently occurs after the fact of sample taking. The ILFHC accomplishes this by permitting the counting and size determinations of the sampled and filtered particulate matter in place, at the site of sampling, without the need for opening or disturbing the particle filtration/counting surface or chamber after preflush and precount until the final count is completed.

3. RP-1, N_2O_4, MMH, A-50

a. Present Practice

RP-1 - At the few places where it is used this fluid is sampled in screw-top glass bottles with conical polyethylene seals to determine composition, purity, and particle content. By this method, the fluid is easiest to sample

of all scope fluids. This method, however, is of questionable validity in particle sampling (unless it is used in conjunction with a DFS) and it introduces extraneous particle contamination through multiple transfer.

N_2O_4, A-50, MMH - Launch site and static test facility operators sample these fluids into stainless steel, double-valved, pressure bombs, in some cases with a membrane contained in a high-pressure membrane holder plumbed between the sampling point and the bomb. The remainder take the particle count and total filterable solids from the bomb sample or do not count particles or total filterable solids.

A few contractors sample MMH and A-50 in a glass or polyethylene bottles. One contractor samples N_2O_4 with the Millipore bomb sampler. One contractor samples N_2O_4 and A-50 directly from the sampling point into glass Millipore filtration assemblies. Most of the contractors who had a commercially available, freon-refrigerated sampler did not use it.

b. Recommendations

RP-1 Purity Sampling - The device used for sampling RP-1 for homogeneous contaminants and for assay will be a 1-qt glass bottle with a screw-on bakelite cap and a conical polyethylene seal. This statement comprises both the design criteria and the specific equipment recommendation.

The procedure shall be to fill the bottle from the sampling point after draining about a quart to waste. Since particulates will be determined separately in the ILFHC for which design criteria are provided separately in this document, extraordinary precautions to exclude particulate contamination are unnecessary; consequently, a longer purge to waste before sampling is unnecessary.

The design criteria, specific equipment recommendations, and general operating procedures for purity sampling of N_2O_4, MMH, and A-50 are presented in the following paragraphs.

Design Criteria - Sampling devices for homogeneous contaminants and for assay in these fluids shall be 2½-liter 3A3000 cylindrical pressure vessels, valved at both ends. The vessels shall be mounted in a holding and transport frame that maintains them with their long axis (the concentricity axis of the cylinder and of the inlet and outlet ports) horizontal or not deviating from the horizontal by more than 35 deg during sample taking.

The fluid-contacting materials of construction shall be nonreactive with and impervious to the operational fluids and contaminants.

The devices shall be capable of accepting and retaining from 1½ to 2 liters of the operational liquid, when such is flowed through the sampling device, and of providing the remainder of its volume as ullage space, automatically by its orientation during the sampling operation (the final volume of ullage depending on system pressure after the outlet valve is closed).

The device shall retain the sampled volume safely at temperatures ranging from that of the freezing point of the operational fluids to 150°F, for an unlimited period.

The sampling device kit shall include flexible ducts to provide sample flow from the system sampling point to the sampling device and from the sampling device to the operational system or to waste.

The device shall be capable of being plumbed to the effluent of the ILFHC for system sampling as well as to the system sampling points.

All portions of the sampling kit that may contact operational fluid shall be capable of immersion in or exposure to such halogenated or water-miscible solvents as trichloroethylene, trichlorotrifluoroethane, methanol, ethanol, isopropanol, and diethyl ether for an unlimited time as required to remove propellant residues and contaminants from these surfaces, and shall endure oven-baking at 250°F for an unlimited period, all in the assembled or disassembled condition, with no deterioration of material or loss of required function upon reassembly, except as may be easily restored by the application of lubricant that is inert to the operational fluid and is readily available commercially.

The sampling kit in total, consisting of the sampling device and connecting flexible tubing to take a fluid sample from one system sampling point, shall be transportable as not more than three disconnected items and shall not exceed two cu ft in volume and 45 lb in weight.

Specific Equipment Recommendation - Hoke Model 8D1488-2250 with one PY 3009 and one PY 3009A valves, carrying handle and valve protection end caps; 2495 cc of actual volume; 316 ss cylinder and 304 ss valves; ICC rating of 3A3000; burst discs to burst at 4400 psi; assembly proof pressured at 5000 psi; total cost of $208.24 quoted March 1, 1966.

The flexible ducts are Aeroquip 666 series, Teflon-lined, rated at 1500 psi of operating pressure and -65 to 450°F continuous operation with CRES 304 fittings.

General Operating Procedure - The samplers shall sample only one fluid in their operational life, and the designation of this fluid shall be prominently and permanently marked on the exterior of the sampler.

Following initial procurement or any chemical cleaning of the sampler and before use, it shall be baked at 250°F for not less than 4 hr while maintaining a GN_2 purge through the cylinder. The sampling cylinder shall be oriented with its long axis horizontal and connected to the sampling point and to a vent system by the flexible ducting, a sight glass being plumbed in the effluent duct. Sample flow sufficient only to provide liquid out the effluent duct is required.

The design criteria, specific equipment recommendations, and general operating procedures for RP-1, N_2O_4, MMH, and A-50 particle sampling are presented in the following paragraphs.

Design Criteria - The sampling tool used for particle sampling of these fluids shall be capable of being plumbed to the system sampling point and being purged with the operational fluid to dislodge all significant particulate contamination from the sampling point and all fluid-wetted portions of the sampling device and connecting tubing upstream of the filtration/counting surface. By this means, the particulate contamination will be deposited on the

counting surface for a microscopic precount of the particle size and population. The device shall provide the capability for the filtration-counting chamber and surface to be reused and purged successively by a flow of filtered gaseous nitrogen, a flow of filtered solvent (for all fluids except N_2O_4), and a continuous bleed of filtered heated gaseous nitrogen, while microscopic examination is performed. No solvent flow will be necessary for the N_2O_4 sampler. The sampling device shall provide such optical capability, including artificial illumination of the counting surface, that this precount, in terms of particle contamination levels of interest to the operational fluid, may be performed in-place, on-site, and without disconnecting the tool from the sampling point.

The device shall then be capable of conducting at least 1 gpm of the operational fluid through the particle-collection surface in a manner that will present the collected particle matter for ready microscopic observation at 40 to 100X without the necessity of changing the focus to examine, and measure microscopically to an accuracy of $\pm$ 7 μ, the longest dimension of the collected particulates of interest to the specification. It shall be capable of sustaining this minimal flow rate through the filtration medium for an indefinite period at a Δp not exceeding 30 psi until the filtration/counting surface has had deposited on it 30 mg of particulates having longest dimensions of 2 to 10 μ and a density of 2.5 to 3.5 gm/cc.

The device shall be capable of withstanding an internal pressure of 450 psig during sample flow.

The device shall provide integral strongback-type clamps to provide mechanical support to the optical window during sample flow to resist hydrostatic pressure.

The device shall be capable of measuring and displaying both the rate of volumetric flow and the total volume of flow during the sampling operation. This may be accomplished by the use of rotary flow meters, by monitoring of pressure drop across a control orifice, by rotameters, or by discharge into a calibrated container. Whatever method is employed, the readout shall be in terms of the volumetric flow rate of RP-1, N_2O_4, MMH, and A-50 in scalar form without the necessity of applying any conversion forms, factors, or tables.

The filtration/counting chamber shall be capable of being purged with filtered GN_2, followed by a filtered solvent flush (except for the sampler used for N_2O_4), followed by a filtered, heated GN_2 bleed to flush the filtration/counting chamber and to deposit the remainder of the particulate matter on the filtration/counting surface, to clear the chamber and the filtration/counting surface of operational fluid residues so microscopic visibility of the particulates retained on the filtration/counting surface is enhanced, and to provide a continuous bleed purge during the counting operation so toxic and optically opaque fumes from residues of the operational fluid entrapped in recesses of the equipment are continuously removed to waste. An alternative to the gaseous nitrogen bleed purge used after solvent flush and during counting is the use of a GN_2-driven eductor discharging into the vent waste system or to atmosphere as safety regulations permit, to produce a vacuum of at least 12 in. of mercury in the filtration counting chamber while counting is in progress. The devices shall then provide the capability for microscopic examination, and for counting and measuring the longest dimension of the particles retained on the filtration/counting surface using optical systems, mechanical stages, dimensioning reticules, and artificial illumination provided by the device itself.

The device shall be capable of determining total filterable solids mass quantity. For this purpose, it shall have a filtration/counting surface medium that can be weighed to an accuracy of $\pm$ 0.0005 gm, both before and after sample particulate retention, on standard laboratory analytical balances. Removal, weighing, and replacement of the filtration/counting surface medium shall require the attention of only one technician for not longer than 5 min, except for any oven-drying and desiccation operations that must be performed exterior to the sampling device

The device shall be capable of performing all the previous operations while remaining connected to the sampling point and while remaining in the same physical orientation (but not necessarily the same physical location) as it occupied during and after the sample filtration operation. The orientation shall ensure that the filtration/counting surface upstream face does not deviate by an angle more than 35 deg at any time from purge and precount filtration until particulate size and count determinations are completed.

All fluid-conducting portions of the device, all flexible tubing required for its operation, and all valving and other accessory items necessary to the sampling and analysis functions of the device shall be component parts of one compact, functionally arranged, easily transportable kit, occupying a volume not exceeding two cu ft, and weighing not more than 45 lb in transportable kit form.

All portions of the sampling kit that may contact operational fluid shall be capable of immersion in or exposure to such halogenated and water-miscible solvents as trichloroethylene (except for the N_2O_4 sampler), trichlorotrifluoroethane, acetone, methanol, ethanol, isopropanol, or diethyl ether as necessary to remove operational (sampled) fluid residues and contaminants in the assembled or in the disassembled condition for an unlimited time without degradation. They shall endure oven-baking at 250°F for an unlimited time with no deterioration of any constituent material or loss of any required function except as may be easily restored by the application of lubricant that is inert to operational fluid and is readily available in commercial supply.

The device shall require no other commodities than the operational fluid being sampled and 110/220 ac electrical power at the location of sampling in order to perform its designed functions except that, if a gaseous nitrogen-driven vacuum-eductor is used or is provided as an alternative, the provisioning of facility GN_2 to the device during sampling operations shall be permitted.

The device shall be capable of performing the required functions, as tabulated on the following page, within the time limits, individually and cumulatively, when operated by one technician.

Function	Time (min)
Filtration/Counting Surface Installation	2.0
Hookup to Sampling Point and to Waste Disposal	0.5
Purge Flow (Operational Fluid)	2.5
GN_2 Purge	1.0
Solvent Purge (except for N_2O_4)	0.5
GN_2 Bleed Purge	1.0
Precount, Full-Field Count, and Size Determination	4.0
Sample Flow	5.0
GN_2 Purge	1.0
Solvent Purge (except for N_2O_4)	0.5
GN_2 Bleed Purge	1.0
Full-Field Count	4.0
Removal of Filtration/Counting surface medium to Petri Dish and replacement if necessary (if TFS required)	2.0
Total -	25.0

The system sample point from which the operational fluid sample is taken will be in every instance, except when the entire operational stream is diverted through the sampling device, the isokinetic-flow sample output of a Wyle dynamic fluid sampler or the sample stream from a Maledco turbulent flow sampling valve, the choice to depend on the operational stream flow characteristics of pressure and volumetric flow rate fluctuations during sampling. If these factors are required to vary by more than 25% during the course of sampling and the line sizes are 1 in. or less, the Maledco valve is preferred because of its lower cost and the probability that it is at least as accurate as is the Wyle dynamic fluid sampler for these fluids under these flow conditions (without rebalancing the isokinetic-flow relationship).

Specific Equipment Recommendations - The ILFHC is conceptual in this application. No equivalent commercially available equipment exists. (See appendix.)

General Operating Procedure - The operating procedure, as nearly as can be defined for conceptual equipment, is adequately implied in the design criteria.

c. Comparison of Recommendations with Those Used at KSC and with Requirements (RP-1, N_2O_4, MMH and A-50)

The advance procedures obtained during the KSC survey and statements made by KSC personnel indicated that glass beakers, double-valved Hoke cylinders, and glass bottles would be used at Complexes 34, 37, and 39 for sampling RP-1, N_2O_4, and A-50 and MMH respectively for both purity and particle sampling, the latter to be obtained by laboratory filtration of the sample quantity. No isokinetic-flow sampling devices or turbulent-flow sampling devices are intended for any systems.

The existing and intended equipment and methods, therefore, while in agreement with the state of the art as exhibited by launch and static test facilities throughout the country, are technically deficient for particle sampling. This is due to the fact that isokinetic means to ensure a representative sample are not provided and that the particle count and mass determined will be that from the sampling point, sampling tools, laboratory filtration equipment, and environment of sample equipment preparation, sampling, filtration, and counting in addition to whatever is validly obtained from the operational fluid.

The ILFHC used with the Wyle dynamic fluid sampler or the Maledco turbulent flow sampling valve will eliminate these deficiencies and, by doing so, will advance the state of the art of particle sampling of these fluids in the operational mode.

Differences and value comparisons of the sampling methods for homogeneous or purity contaminants in these fluids used or intended for use at Complexes 34, 37, and 39 and those provided by the design criteria, specific equipment recommendations, and general operating procedures of this report are more difficult to quantify. The size or specific type of sampling cylinder to be used for N_2O_4 sampling

is unknown. For RP-1, both sources agree that a glass bottle is adequate. For MMH and A-50, however, it is the consensus of the facilities surveyed that sampling of these should be by closed system into a high-pressure, double-valved cylinder rather than into any sort of glass container.

In summation, for impurity (homogeneous) parameters in the storable ambient temperature liquid propellants and from what little is known concerning the intended methods of sampling at Complexes 34, 37, and 39, the methods proposed herein will differ principally by offering an increased level of personnel and equipment safety during the sampling, transport and analysis functions. A case cannot and should not be built for any major improvements in sampling accuracy or validity by the use of the equipment and methods recommended for these parameters.

Adoption of the particulates sampling equipments and methods recommended herein, however, will cause a major change in capability over that presently used at Complexes 34, 37, and 39. Both the existing KSC methods, and those recommended in this report provide capability of sampling to the applicable contamination control criteria specification parameters for impurity (homogeneous) contaminants and assay parameters for these fluids. However, if the 175 or 100 μ absolute longest particle dimension limit is retained for the particulate specification in these fluids, open container sampling or other methods that admit unaccountable background particulates to the counting membrane by the process of sampling and sample processing (such as are provided by existing methods at Complexes 34, 37, and 39) will fail. The ILFHC approach will be found necessary to meet these criteria dependably.

4. GO_2, GN_2, He, and GH_2

a. Present Practice

Present practice is to sample these fluids for purity and for the determination of impurities by pressurizing a stainless steel bottle (usually a commercial 3A1800 one, 2- or 3-liter bottle) valves at both ends. Some organizations use the wire-wrapped, or strapped, walkaround aviator's breathing oxygen bottle, and at least two organizations build their own.

Most organizations sample particle content by soft plumbing a high-pressure membrane holder directly to the system and purging to atmosphere through the membrane. Some use regulators between the sampling point and the membrane; most do not. One contractor uses a flow-limiting orifice. Two contractors sample the particle content from the bomb rather than directly from the system.

Most organizations sample gas systems for moisture by attaching an electrolytic moisture indicator directly to the system and reading the instrument. A minority take moisture readings from the bomb samples. One organization uses a dew-point cup and two organizations use an adiabatic-expansion instrument.

b. Recommendations

Recommendations for sampling devices for purity parameters are discussed in the following paragraphs.

Design Criteria - Sampling devices for homogeneous contaminants in these fluids, other than moisture, shall be 2½-liter, 3A3000 cylindrical pressure vessels, valved at both ends. The fluid-contacting materials of construction shall be nonreactive with, and impervious to, the operational fluids and contaminants.

The devices shall be capable of accepting and retaining a quantity of gas equivalent to 500 liters at standard conditions at a pressure of 3000 psig, at gas and equipment conditions of from -40 to +150°F, and while subjected to changes in orientation, impact, and abrasion normally encountered during handling and transportation, without endangering nearby personnel and equipment.

The sampling device shall include flexible ducts to provide sample flow from the system sampling point to the sampling device, and from the sampling device to waste as required by safety practices

The device shall be capable of being plumbed to the effluent of the ILFHC for system sampling, as well as directly to the system sampling points. All surfaces of the sampling kit that contact the operational fluid shall be capable of being immersed in or exposed to halogenated or water-miscible solvents (e.g., trichloroethylene, trichlorotrifluoroethane, methanol, ethanol, isopropanol, and diethyl

ether) for an unlimited time as required to remove residual contaminants from these surfaces. It shall be capable of being oven-baked at 400°F for an unlimited time, assembled or disassembled, without deterioriation of material or loss of required function on reassembly, except as easily restored by lubricants. Lubricant shall be inert to the operational fluid and shall be readily available commercially.

The sampling kit, consisting of the sampling device, pressure-reducing regulator and pressure gages, and connecting flexible tubing to take a fluid sample from one system sampling point, shall be transportable as not more than three disconnected items having a total volume not exceeding 2 cu ft and not weighing more than 50 lb.

The system sampling port, including the sample outlet of the Wyle DFS (if the latter is used as the sampling stream delivery point) shall be equipped with integral, permanently installed orifices to limit sample stream flow to not more than 0.37 lb/sec (285 scfm) of GN_2 at 6000 psig, to not more than 0.023 lb/sec (15.7 scfm) of GO_2 at 3000 psig, to not more than 0.140 lb/sec (755 scfm) of He at 6000 psig, and to not more than 0.0058 lb/sec (62.8 scfm) of GH_2 at 6000 psig.

Specific Equipment - Hoke Model 8D1488-2250 with valves PY 3009 (1 ea) and PY 3009A (1 ea); carrying handle and valve protection end caps; 2495 cc actual volume; 316 ss cylinder; 304 ss valves; ICC rating 3A3000; burst discs to burst at 4400 psi; assemblyproof-pressured at 5000 psi; total cost $208.24, quoted 1 March 1966.

Hose - Resistoflex R62800CC series (Teflon lined); 6000-psi working pressure.

Regulator-pneumatic: range-inlet, 6000 to 0 psi; outlet, 3000 to 0 psi; equipped with pressure gages for inlet and outlet pressures and burst disc. Commercial Standard.

Regulator-pneumatic, inlet: range 3000 to 0 psi; outlet, 3000 to 0 psi; equipped with pressure gages for inlet and outlet pressures and burst disc. Commercial Standard.

Orifice plates for operational system sampling port shall be custom fabricated.

General Operating Procedure - The cylindrical pressure vessel shall contain a residual positive pressure of 25 to 30 psi from the last sample taken that was acceptable to the specification criteria for purity.

The regulator shall be attached directly to the system sampling point. The appropriate flexible ducting (defined in the specific equipment recommendations) shall be attached to the outlet of the regulator and to a three-way valve positioned to conduct the purge gas to atmosphere or, for GO_2 or GH_2, to the vent system, with its other outlet attached to the inlet valve of the pressure-cylinder sampling device. The regulator shall be closed and the system sampling valve opened slowly to admit pressure to the regulator. The regulator shall be opened sufficiently to purge the system sampling point regulator and flexible ducting, and shall then be closed.

The three-way valve shall be repositioned to provide flow to the inlet valve of the pressure cylinder sampling device. The regulator shall be opened to approximately 1500 psi, and the inlet valve to the sampling cylinder shall be opened. When the sampling cylinder pressure is equalized with the regulator set pressure, the inlet valve to the sampling cylinder shall be closed and the outlet valve opened to purge the contained pressure to atmosphere or to the vent system for GO_2 and GH_2, retaining a small positive pressure in the cylinder. Pressurization and venting of the sampling cylinder shall be repeated twice, after which the regulator outlet pressure shall be reduced to approximately 50 psi and the inlet valve again opened to purge the sampling cylinder for 3 minutes. The outlet valve shall then be closed, and the regulator turned up until the pressure is 2000 to 2500 psi. When the cylinder pressure is equalized with the regulator set pressure, the cylinder inlet valve is closed, the regulator is turned back to 0 pressure output, the system sampling point valve is closed, the three-way valve is positioned to vent, the sampling cylinder assembly is disconnected, the flexible ducting is disconnected from the regulator, the regulator is again opened to relieve

the pressurized operational fluid trapped between it and the operational system sampling valve, and the regulator is disconnected from the system sampling point.

This operational procedure requires that the limiting orifices specified for each operational system in the design criteria for this equipment be permanently installed in the sample outlet point of the system so that, under no conditions, can the specified flow rates be exceeded, including those resulting from mechanical failure of sampling equipment.

The purity/impurity samplers are to sample only one fluid in their operational life and the designation of this fluid is to be prominently and permanently marked on the exterior of the sampler.

Following initial procurement and chemical cleaning, and before use, the purity sampler shall be baked at 400°F for not less than 12 hr while maintaining a residual pressure of not more than 10^{-7} torr applied through an LN_2 cold trap, shall be repressurized with the fluid for which it is to be used, and shall be maintained with at least 1 atm positive pressure of this fluid internally at all times that it is not evacuated preparatory to sample taking, for the term of its operational life. The evacuation and back-out process shall be repeated if the sampler is found to have experienced any of the following:

1) An out-of-specification sample;

2) Exposure to the atmosphere;

3) Introduction of any fluid other than that to which it is assigned.

Recommendations for sampling devices for particulate contamination are discussed in the following paragraphs.

Design Criteria - The sampling tools used for particle sampling of these fluids shall be capable of being plumbed to the system sampling point and of being purged with the operational fluid to dislodge all significant particulate contamination from the sampling point and from all sample-fluid-contacting surfaces of the sampling devices and connecting tubing upstream of the filtration-particle counting surface; and, by this means, of having this material deposited on the surface for a microscopic precount of the particle size and population, without disconnecting the tool from the sampling point or opening the sampling tool. The devices shall be capable of conducting the operational fluid through the particle collection surface to present the collected particle matter for ready microscopic observation at 40X or greater magnification, and without changing focus, examination and measurement to an accuracy of $\pm$ 7 μ. They shall be capable of sustaining a minimal flow rate, herein stipulated, through the filtration medium for an indefinite period at a ΔP not exceeding 750 psi until the filtration-counting surface has deposited on it 50 mg of particulate matter, having longest dimensions of 2 to 10 μ and a density of 2.5 to 3.5 gm/cc.

The sampling device shall measure and display the rate or volume of flow during the sampling operation, unless this capability exists in pressure-indicating devices on either side of the flow-limiting orifices.

A differential pressure indicator, calibrated for the specific fluid and orifice, shall identify sample stream flow rate for predictable steady-state operational system pressure during sampling.

For those systems incapable of predictable steady-state conditions during sampling, the pressure on either side of the flow-limiting orifice will be monitored and a nomograph used to calculate flow. The sampling kit shall provide flexible or rigid ducting to conduct the sample stream from the sampling point to the expansion chamber, from the expansion chamber to the filtration-counting chamber, and, for GH_2 and GO_2 (as safety practices require), from the filtration-counting chamber to a vent system.

The devices shall provide fixed orifices, an expansion chamber, burst disc, and relief valves between the sampling point and the filtration-particle counting chamber so that the gage pressure in the latter never exceeds 750 psi when the sampling assembly is connected to the sample port of a Wyle DFS providing the following extreme flow conditions:

GN_2 0.37 lb/sec (285 scfm) at 6000 psig

GO_2 0.023 lb/sec (15.7 scfm) at 3000 psig

He 0.140 lb/sec (755 scfm) at 6000 psig

GH_2 0.0058 lb/sec (62.8 scfm) at 6000 psig

These values shall permit one size of ILFHC to be used for GN_2 and He and a smaller size to be used for GO_2 and GH_2, so that only two sizes shall be required.

The GN_2 sampling point shall use a single 1% Wyle DFS to achieve the sample mass flow rate from the maximum system flow rate of 2200 lb/min.

The GO_2 sampling point shall use a single 15% DFS to achieve the sample mass flow rate from the maximum system flow rate of 9 lb/min.

The He sampling point shall use a single 1.3% DFS to achieve the sample mass flow rate from the maximum system flow rate of 640 lb/min.

The GH_2 sampling point shall use a single 1% DFS to achieve the sample mass flow rate from the maximum system flow rate of 35 lb/min.

The devices shall provide integral strongback-type clamps to provide mechanical support to the optical window during sample flow to resist hydrostatic pressure.

The devices shall provide a microscope to observe, count, and measure the longest dimension of all particles of interest to the applicable specification, to an accuracy of $\pm 7\ \mu$.

The microscope shall be attachable to and detachable from the filtration counting chamber in less than 30 sec, in a manner that affords mechanically controlled, precision relative movement between the microscopic field of view and the total effective filtration-particle counting surface. The magnification shall be 40X or greater. A projected calibrated linear scale shall be visible in the microscopic field of view, and shall have a projected value of not more than 14μ/division, as necessary to determine the longest dimensions of the particles. The microscope shall provide, by integral means, artificial illumination of the filtration-counting surface of an intensity sufficient to provide clarity of detail.

The device shall determine the total filterable solids mass quantity by a filtration-counting surface medium that can be weighed to an accuracy of ± 0.0005 gm before and after sample particulate retention, on standard laboratory analytical balances. Removal, weighing, and replacement of the filter-counting surface medium shall require the attention of only one technician for not longer than 5 minutes, in addition to any necessary oven drying and desiccation exterior to the sampling device.

The device shall perform all of the previous operations while connected to the sampling point and while in the same physical orientation (but not necessarily the same physical location) as it occupied during and since the sample filtration operation. The orientation shall assure that the filtration-counting surface upstream face does not deviate by more than an angle of 35 deg at any time from purge and precount filtration until particulate size and count are determined.

All surfaces of the sampling kit that contact operational fluid shall be capable of immersion in or exposure to halogenated or water-miscible solvents, (e.g., trichloroethylene, trichlorotrifluoroethane, acetone, methanol, ethanol, isopropanol, or diethyl ether) as necessary to remove contaminants, while assembled or disassembled, for an unlimited time, and of being oven-baked at 250°F for an unlimited time, without deterioration of any constituent material or loss of any required function, except as easily restored by lubricant. Lubricant shall be inert to the operational fluid and shall be readily available commercially.

The device shall require no commodities, other than the operational fluid being sampled, at the sampling location to perform its designed functions.

The device shall be capable of performing the functions listed in the following tabulation within the time limits indicated, individually and cumulatively when operated by one technician.

Function	Time (min)
Filtration-Counting Surface Installation	2.0
Hookup to Sampling Point and to Waste Disposal	0.5
Purge Flow (Operational Fluid)	2.5
Precount of Full Field and Size Determination	4.0
Sample Flow	5.0
Full Field Count	4.0
Removal of Filtration-Counting Surface Medium to Petri Dish and Replacement (if TFS Required)	2.0
Total	20.0

The entire sampling kit, including the filtration/counting chamber, expansion chamber with burst disc and relief valves, orifice holder, microscope assembly, and connecting tubing and valving, and all other accessory items necessary to the sampling and analysis functions of the device shall be component parts of a compact, functionally arranged, easily transportable kit, occupying not more than 2 cu ft and weighing not more than 45 lb in transportable kit form.

The Wyle DFS shall be permanently attached to the operational system and shall not be a portion of the fluid sampling kit.

Specific Equipment - The in-line filter holder and counter, consisting of the filtration-counting chamber and attached microscope is, insofar as is known to the study team, a new concept for which equipment does not exist. It has been estimated that in excess of 500 hr of engineering design and experimentation time will be necessary for the production of the first working prototype, at a cost of $15,000. It is further estimated that ten additional items could be produced for $750 each; it is possible that further quantity prices could approach $250 each.

The flexible ducting recommended is that listed for the purity sampling kit.

The burst discs and relief valves for the expansion chamber shall be commerical standard.

The expansion chamber, orifice holder, and plates should be custom-fabricated to produce the pressure drop in the sample stream necessary for each sampling point and for each operational fluid. These orifices should be smooth conical orifices with rounded edges; and the larger opening should face upstream.

General Operating Procedure - The operating procedure is adequately implied in the design criteria.

Recommendations for sampling devices for moisture in GN_2, GO_2, GH_2, and He are discussed in the following paragraphs.

Design Criteria - Operation of the device used to determine the moisture content of fluids in operational systems shall be based on the Faraday equivalent, by measurement of the electrolysis current necessary for complete dissociation of the water continuously absorbed or adsorbed from the sample stream.

It shall require a purging time, after connection to the operational system sampling point, of not longer than 10 minutes to achieve a stable reading indicative of the true moisture content of the sample stream accurate to ± 0.2 ppm of moisture at a level of 5 ppm of moisture in the operational fluid.

It shall require no commodity at the point of sampling other than the fluid whose moisture content is to be determined. It shall indicate moisture in ppm immediately after purging and stabilization and, thereafter, give continuous indication of the moisture content of the operational fluid to the same level of accuracy. It shall be limited in its response and indication only by the time delay due to the passage of the sample fluid from the operational system exit into the sampling device, provided that the true moisture content of the operational fluid does not vary more than 50 ppm/3 min.

The device shall provide this continuous indication for a minimum period of 8 hr without receiving attention or replacement of component parts.

The sensitivity of the device shall be less than 1 ppm of moisture in gases. The moisture content displayed for the most sensitive scale shall range from 0 to 10 ppm, in increments of 0.2 ppm.

The device shall occupy less than 1 cu ft and weigh not more than 20 lb.

The sampling (moisture) device shall be connected to the appropriate pressure regulator defined in the specific equipment recommendations, by 1/8-in. inside diameter 304 or 316 stainless steel tubing coiled to allow sufficient flexibility for adjustment to various orientations of the sampling point regulator outlet with respect to the placement of the moisture sampling device at the sampling location. Four turns in a coil of 1 ft diameter are sufficient to afford the required flexibility for most sampling points. (Wall thickness of tubing shall be based on operating pressure of the system.)

Flexible ducting for this purpose shall be avoided whereever possible due to the difficulty of achieving equilibrium moisture content with the sample gas during the purging step in sampling operations.

Specific Equipment - Specific equipment recommended and approximate cost includes:

1) CEC Moisture Monitor 26-304, approximately $700;

2) Beckman Hygromite 17902, approximately $1000.

General Operating Procedure - The regulator identified in the specific equipment recommendations shall be plumbed to the operational system sampling port as specified for non-moisture purity sampling and to the inlet port of the electrolysis moisture sampling (and monitoring) device by rigid tubing. The outlet of this sampling device shall be plumbed by flexible ducting to the vent system as required by safety practices for GO_2 and GH_2.

The moisture sampler shall be purged with the operational fluid in accordance with the manufacturers' instructions for the specific instrument, until a stable reading is obtained. The commercial instruments contain integral bypass systems to facilitate sampling line purging.

c. Comparison of Recommendations with Those in Use at KSC and with Requirements (GN_2, GO_2, He, and GH_2)

As discussed earlier in this chapter, the concept of a bottle cannot be practically improved on for transferring a small quantity of fluid from one location to another. The bottles being used and intended for use at Complexes 34, 37, and 39 at KSC are cylindrical pressure vessels valved at both ends. The design criteria presented in this report are for the same devices in all essential respects.

Safety parameters are improved by the stipulation of a cylinder with a higher pressure rating than has been previously used and by limitation of sample absolute mass flow under the most extreme system conditions to a very small rate for the reactive gases GH_2 and GO_2, and to a much larger but still quite manageable flow for the inert gases GN_2 and He, by the installation of permanent flow-limiting orifices into the system sample-point outlet.

This factor will make an adequate number of sample points for the systems far more acceptable to the operational systems and launch operations personnel, and will greatly increase safety to personnel and equipment used in sampling and to the operational system.

In the past, the fact that the same sample point was used to sample for particle content as well as for purity precluded the limiting of flow, because this would have invalidated the representativeness of the particle sample. However, the use of the Wyle DFS will make this benefit practical by providing fully representative particle content samples at comparatively low sample flow rates, limited only by the ability of the gas to transport the largest and most dense particles to the filtration-counting device. The same sample point, therefore, may still be used to sample both purity and particle content, but its flow requirements no longer depend on the demands of the latter.

A single 1% DFS with GH_2 and GO_2 provides the maximum possible gas flow rate with a minimum of complexity and safety hazard. Limitations on the GN_2 and helium sample flow rates, also made possible by the use of the DFS, are predicated on the simplest sampling configuration for GN_2, on the expense of helium consumption during particle sampling, and on limiting the physical hazard of reactive force if portable sampling equipment fails or personnel err.

Improvements afforded by adoption of the equipment and methods recommended in this report for gas purity sampling, over those existent at Complexes 34, 37, and 39, therefore, are chiefly in the area of increased personnel, equipment and facility safety, fluid economics, and system integrity.

With regard to particle sampling, simple side tap sampling, with flow limitation imposed only by the sampling point valve, and the use of sampling devices that are incapable of accounting for particles deposited on the membrane from sampling tool assembly and handling, from sampling point and sample equipment flow-conducting surfaces upstream of the membrane, from disconnection and disassembly of the tool from disorientation during transport and from transfer of the membrane to the microscope for counting, has already been discussed. The deficiencies in sampling associated with this process, as well as the danger during reactive gas sampling, and the reactive force hazard associated with high-pressure inert gas sampling are significant. The recommended equipment and methods, adequately defined and discussed in this report, will eliminate or mitigate every one of these deficiencies as they exist in the sampling methods in use at KSC. It is strongly recommended that these improvements in gas particulate sampling be adopted by NASA-KSC. Their adoption will materially advance representativeness, reliability, economy, safety, response-time, sensitivity and accuracy over that afforded by current methods of gas particulate sampling at KSC.

5. Comparison of Final Design Criteria for Sampling with Preliminary Design Criteria Presented at the Midway Oral Report

For the LO_2, LN_2, and LH_2 purity sampling, the final criteria are the same as the preliminary criteria, except that data obtained since the oral report indicate that vacuum-jacketing of the cryogenic sampler will not be necessary. For particulate sampling of these fluids, the final criteria are the same as the preliminary criteria except that it is now considered practicable to use the ILFHC for LH_2 as well as LO_2 and LN_2, and the same device may be used to determine total-filterable solids from all three fluids.

These changes have reduced the variety of equipment and procedures required to sample these fluids.

The equipment and methods presented in the preliminary criteria, with the exception of the vacuum-jacketing of the purity sampler, remain valid where field conditions would make their use more practical than the methods in the final recommendations. As an example of this, where repetitive sampling for particle size and population is desired without membrane replacement in the ILFHC, and total filterable solids (TFS) determination is also desired, the latter may be taken directly from the system by the high-pressure membrane holder or from a fluid sample taken in a dewar.

TFS determinations are comparatively insensitive to fluid and membrane-handling, as well as to the environmental contributions of these operations. On the other hand, particle size and count-determinations are extremely sensitive to these factors.

This statement can be confirmed by the fact that one fiber 200 μ long by 20 μ in diameter, added to a particulate sample by handling or environment, will cause failure of the sample for those fluids having absolute length limits in their criteria. The same fiber will add only 63 billionths of a gram to a TFS sample (assuming a specific gravity for the fiber of one). It would take 16,000 or more such fibers to exceed 1.0 mg, the maximum TFS permitted in 1 liter of LO_2. Since a total of about 5 gal. or 19 liters will be flowed, the fibers would have to number approximately 333,000 to cause failure of the TFS sample of their own accord.

TFS samples are comparatively insensitive to environmental contributions, whereas particle count and size samples are extremely vulnerable to these environmental contributions to a degree that increases exponentially as progressively smaller dimensional limits are specified in the criteria.

The principles of this discussion apply equally to sampling of storable liquids and gases. Further, the striking disparity in sensitivity between these two forms of particulate sampling should receive intensive investigation in the next phase of this study to determine whether TFS requirements should be drastically revised.

For RP-1, there has been no essential change in criteria from that presented in the oral report midway through the study.

For N_2O_4, A-50, and MMH, a significant change from the preliminary design criteria is that it is now considered feasible to count the particles, microscopically, that are retained by the ILFHC at the sampling site. This is accomplished through about 25 ft of flexible ducting, from the ground-servicing cart to the ILFHC, and by gas and solvent purges through this duct. Extrapolating from operational Air Force safety regulations, this distance should permit the microscopist to perform the count without wearing a complete protective clothing outfit. The benefits, previously described, of eliminating disconnection from the sampling point during the purge/precount/sample/flow/final count sequence are thereby afforded to this use of the ILFHC also. Discussion of the feasibility and desirablity of this provision remains academic for the present since Table III-2, "Particle and TFS Criteria for Saturn IB and Saturn V", shows that particle sizes and population limits still have not been assigned to these fluids by any document furnished to or discovered by the study team. The design criteria, specific equipment recommendations, and general operating procedures for application of these ILFHC methods to sampling of these fluids are given, therefore, only in anticipation, based on other program experience, that these criteria will be necessary for Saturn Apollo use of these fluids.

Consequently, with regard to compatibility with NASA safety regulations pertinent to each sampling location, resolution of the exact distances from the fluid-filled systems for unprotected microscope use would be premature at this time.

Another difference between the preliminary and final criteria is the provision that the Maledco valves may be used alternatively to the Wyle DFSs for these fluids. This change also has resulted from further investigation since the time of the oral report.

The final design criteria, procedures, and recommendations for the ambient gases provide that a complete ILFHC may be used for particle size and population sampling. The preliminary criteria specified the high-pressure membrane holder with an optical window only.

This change in approach is based on the conviction, resulting from further analysis, that the operational system pressures can practicably be reduced by fixed orifices to an amount that can safely be handled by the type of ILFHC considered for initial development, and that this reduction in pressure can be attained without sacrifice of sample validity. The benefits obtained by this change are all of those attributable to the full use of the ILFHC as previously detailed.

Additional differences in the compared criteria are in the orifices, expansion chambers, and safety devices stipulated for ILFHC use.

The basic philosophy and practice of sampling have changed little from that represented in the preliminary design criteria presented in the oral report. The changes that have occurred are decreased sampling equipment variety, increased capability and decreased cost of equipment, and improved safety provisions. These changes have resulted from further investigation pertinent to the study program performed since presentation of the oral report.

B. MONITORING

1. Particle Monitoring

The survey of launch sites and static test facilities using propellants and pressurants identical or similar to the operational fluids of interest to this study disclosed no facilities that used any of the zone-sensing-type automatic particle counters for inspection of these fluids. One manufacturer of sampling valves reported that a NASA group was using one of these zone sensing devices on the RP-1 service cart for the hydraulic system using this fluid. However, such use would have little bearing on the statistics or conclusions of this study since the study is explicitly limited to propellants, pressurants, and life support fluids and systems.

The nature of contamination control in hydraulic systems is different in some particulars from that exerted on propulsion systems even when the fluid is identical. Therefore, the justification for using this device cannot be validly transferred from a hydraulic servicing unit to that in an operational propellant system without some qualification.

Figures V-14 thru V-17 illustrate the four operable concepts of automatic particle counters most pertinent to the study.

The HIAC Automatic Particle Counter, Fig. V-14, detects the projected cross-sectional area of particles passing between the light source and the phototube by measuring the momentary reduction in the output signal from the phototube caused by the particle shadow. The manufacturer believes that this instrument could be adapted for cryogenic usage and for the gases included in this study. RP-1 and GN_2 have been monitored by this instrument, but its adaptability for N_2O_4 and the amine fuels is not known.

Cells are available which count particles in selected size categories from 85 to 2500μ with a capability of up to 12 particles/cc without coincidence, and from 35 to 1000μ with a capability of up to 75 particles/cc without coincidence, at a flow rate of 3 liters/minute. All of the fluid presented to the instrument is sensed and none is bypassed.

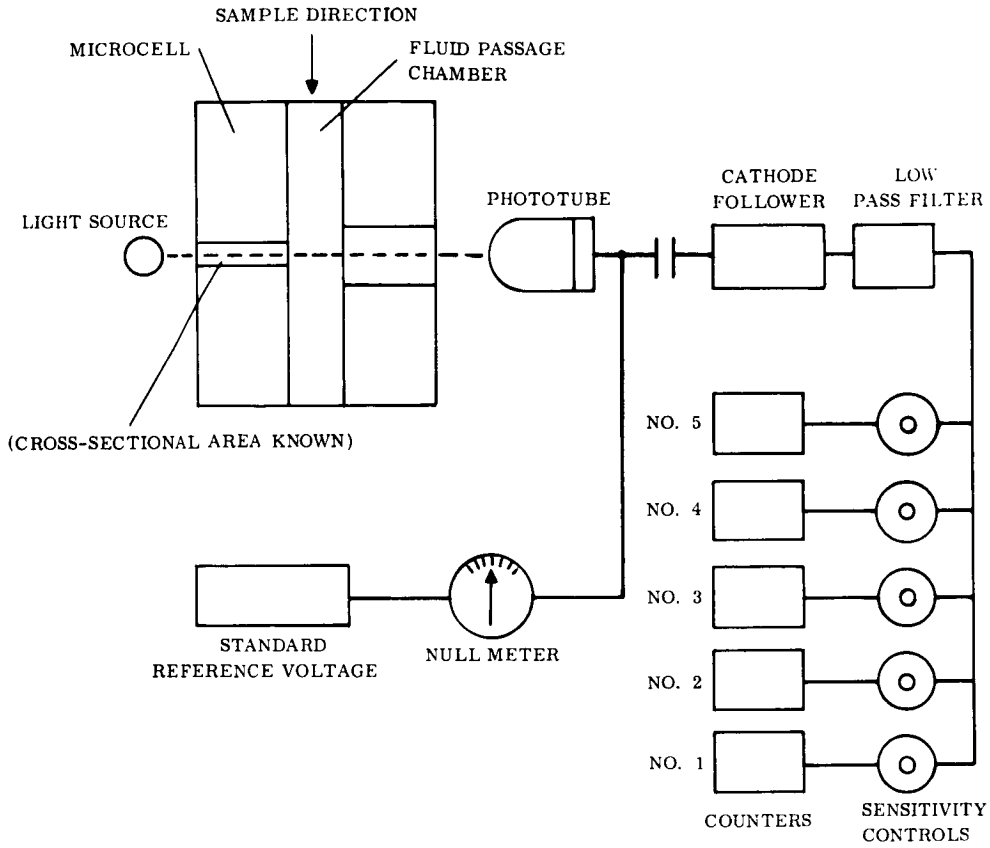

Fig. V-14 Schematic Diagram of HIAC Automatic Particle Counter

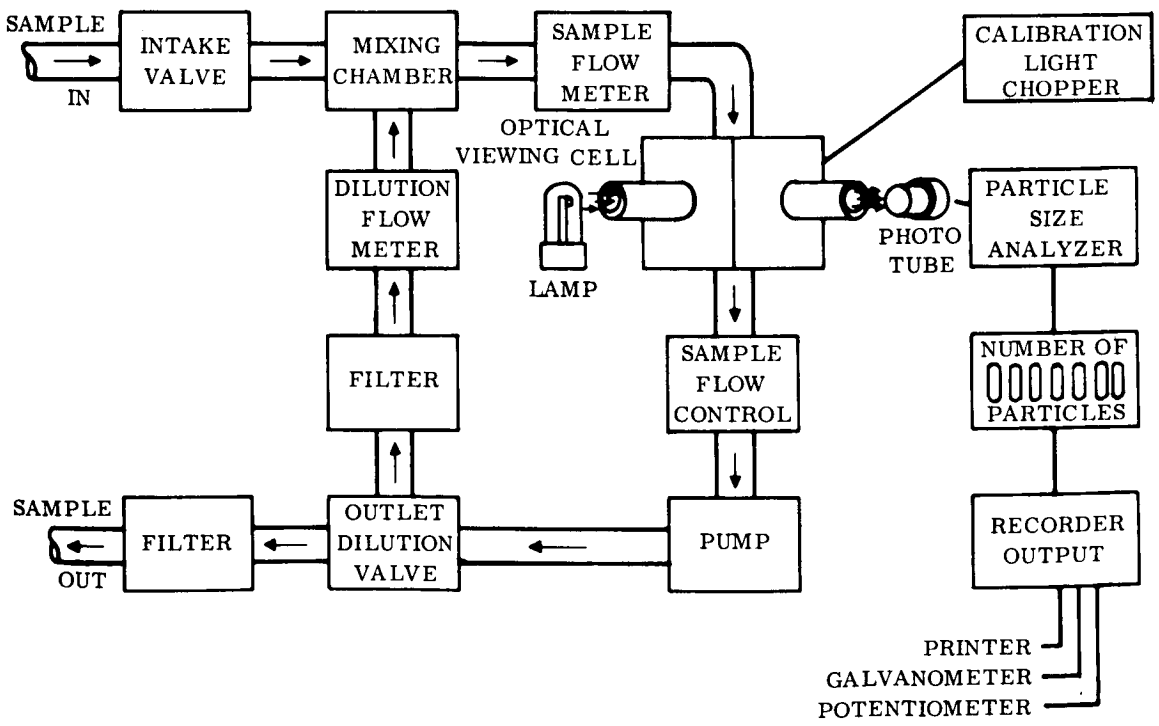

Fig. V-15 Schematic Diagram of the Optical Sensor Portion of the Royco Nephelometer Liquidborne Particle Monitor

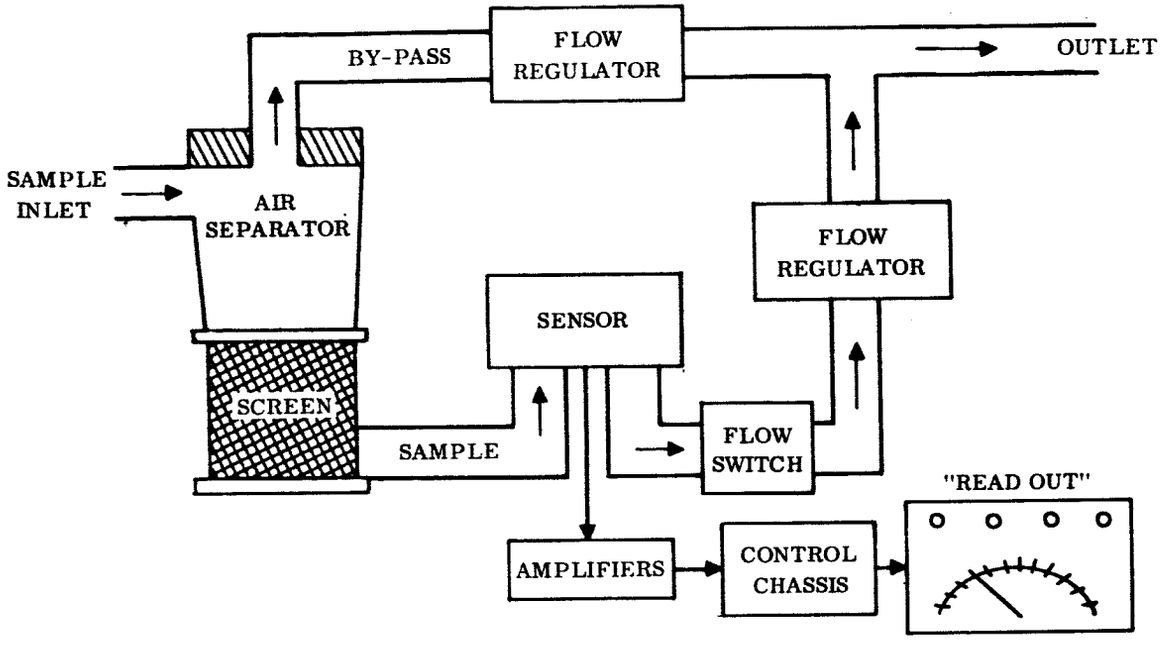

Fig. V-16 Schematic Diagram of the Micro-Scan

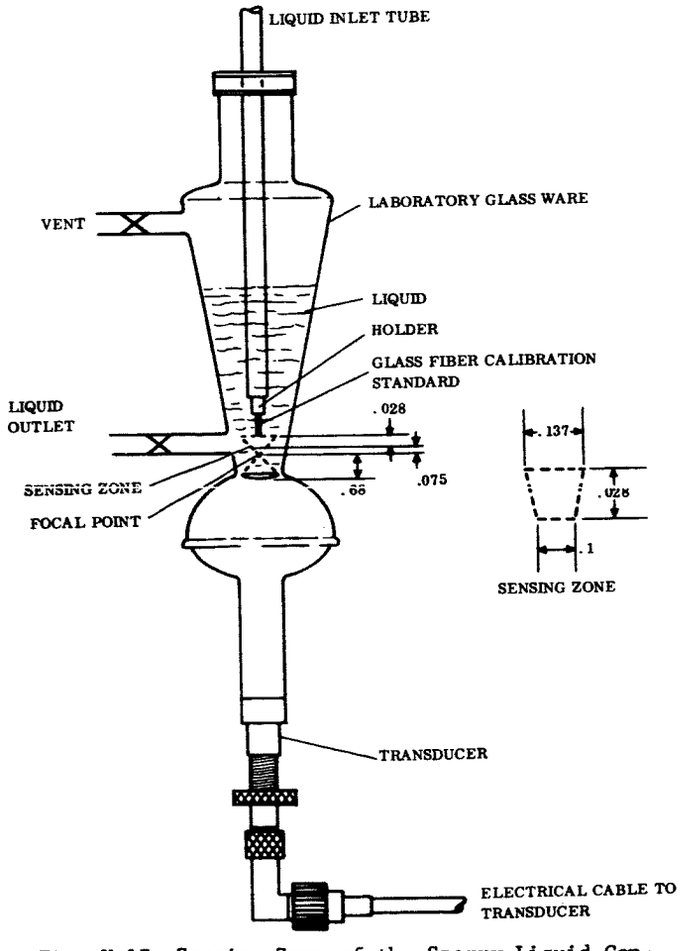

Fig. V-17 Sensing Zone of the Sperry Liquid Contaminant Level Indicator

The Royco Particle Counter, Fig. V-15, detects the light scattering by the particles at 90 deg to the incident light. The intensity of the scattered light is sensed by the photomultiplier tube whose output is amplified and discriminated and sent to the size range counters. The manufacturer believes that the instrument can be adapted for cryogenic usage, that it can be used for the gases included in this study, and that it appears feasible to use it for particles larger than 10μ in N_2O_4. It is used for RP-1 and for gases up to 25,000 psi. The amine fuels have not been investigated. The flow rate of the liquid cells is 100 cc/minute and can be raised to 1 gal./minute with some loss of sensitivity. (The sensitivity is for particle categories considerably smaller than those in the fluids in this study.) The flow rate of the gas cell is 1/10 standard cu ft/minute. There is no internal bypass in either instrument.

The Micro Scan Continuous Contamination Monitor, Fig. V-16, measures the capacitance change of the sample stream due to particles and free water. The sensors consist of two capacitor plates between which the sample stream passes. The readout is a function of the total volume of the contaminant and thus no size or count is sensed. Particles larger than 200μ are separated before reaching the sensing chamber. A portion of the sample stream bypasses the sensing chamber.

The manufacturer states that the instrument has application for RP-1 and possibly the amine fuels, but applicability to any of the remainder of the fluids is doubtful.

The Sperry Liquid Contaminant Level Indicator, Fig. V-17, senses particles in a fraction of the cross-sectional area of the sample stream by measuring the amplitude of a reflected 5.0 mc ultrasonic pulse produced by a lithium sulphate transducer. (These four schematics of contamination sensors are taken from Ref 5.)

None of the automatic particle counters described can detect or report the longest dimension of the particle or fiber. All criteria defining allowable particulate contamination in fluids by population, including those of NASA, refer to particles and fibers by the longest dimension. Therefore, the use of automatic particle counters for monitoring particulate contamination in the fluids of interest to this study is not feasible unless:

1) The criteria are changed to define particles in terms of some parameter other than the longest dimensions, e.g., projected cross-sectional area, which can be detected by automatic particle counters;

2) A correlation can be demonstrated between particle size and count, determined by the automatic counter, with the size and count determined by the light-microscope method of SAE Aeronautical Recommended Procedure 598;

3) An automatic instrument can be developed to actually measure longest particle dimension.

The third possibility does not appear likely in the foreseeable future. Attempts to demonstrate correlations as indicated by the second possibility have been made by a number of organizations. The results of these studies will be discussed in the following paragraphs.

The Materials Division of the Propulsion and Vehicle Engineering Laboratory at MSFC has evaluated several commercially available models of these devices based on ultrasonic energy reflectance, light occlusion, and light scattering. These studies were conducted with hydraulic fluids and with air as the test fluids. These evaluations (published in technical memoranda) indicate that the light occluding device manufactured by the High Accuracy Products Corporation of Claremont, California, and the ultrasonic particle counter manufactured by the Sperry Products Division provide good correlation of the particle dimensions reported with those obtained by microscopic observation of particles retained on filtration membranes as filtered from samples of the same fluid, in the same condition as the automatic counter experienced. The correlation factors are derived for three closed-end particle ranges (10 to 25μ, 25 to 50μ, and 50 to 100μ), and one size category with an unbounded upper limit (>100μ). The factors for the closed-end ranges are presumed to be valid for those ranges. The factor for the size category unbounded by an upper limit is presumed to be valid for some particle size range within this open-ended category, but certainly not ad infinitum. Since hydraulic specifications generally do not have an absolute upper size limit in their particulate criteria, these results are more applicable to hydraulic specifications. Since propellant and pressurant specifications do generally provide absolute upper limits for particle size criteria, and these limits are larger

than those of the closed-end ranges treated of in the NASA technical memoranda, the results published in these memoranda are not considered to be validly applicable, without further experimentation to propellants and pressurants.

The light occlusion type, which was reported to have a satisfactory level of correspondence in its determinations with those of the microscopic method, determines only the projected cross-sectional area of the particle in the particular orientation, with respect to the light projection axis that it happens to occupy while it passes through the light beam. It then reports the "size" of the particle as the diameter of a circle of equivalent area to the projected cross-sectional area of the particle. Consequently a particle that the machine reports as 100μ quite possibly could be 100μ in its greatest dimension if it were a sphere. Also it could actually be a fiber 25μ in diameter and 300μ in length, which is projected normal to its long axis, or something quite greater in dimension if projected at any other orientation.

It is presumed that the conclusions of the MSFC technical memoranda are entirely valid for the size ranges tested and the contaminants, both artificial and normal to the fluids and systems being investigated. However, for the fluids of interest to this study, and more especially for the more diverse configurations and sizes of particulates that occur in them as opposed to a recirculating, filtered and refiltered hydraulic fluid system, a much greater disparity may exist between the actual dimensions of the particle and theoretical length of the circle of equivalent area to the projected cross sectional area of that particle.

One of the NASA technical memoranda (Ref 6), evaluates a Royco Model 3300 automatic particle counter for pneumatic systems. The following is a direct quote from this reference:

> "Maintaining uniform contamination levels in a gaseous system would be expected to be somewhat more difficult than for a closed loop hydraulic system ..... The higher standard deviations for the automatic counts, therefore, are not unexpected ..... Results for the largest size ranges, >20μ and >40μ were similar to those for the >10μ size range except that the scatter increased with increasing particle size, becoming so large for the >40μ size range that the results are of little or no value."

The authors attribute this last defect to characteristics of the detection method, or, at least, to characteristics of the particular machine tested, rather than to all of the existent automatic particle counters. However it is believed that this characteristic will operate to a greater or lesser extent on any set of data for any type of counter that uses an area basis for detection and quantification, providing that natural contaminants native to propulsion and pressurization systems are used, and that the size limit considered is in the hundreds of microns and is reported as population per finite range (not population greater than a stated size only).

Reference 7, also published by NASA-MSFC, reported the results of an evaluation of High Accuracy Products Corporation Model PC-202 automatic particle counter. Tables I and II of Reference V 7 present count comparisons of the HIAC counter with those obtained microscopically. The data for only the largest size-category studied, >100μ, are presented in Table V-1.

It can be seen that in four of the five series of samples grouped in these tables in which particles in excess of 100μ appear, the microscopic count is over 2, 4, 6, and 8 times the count reported by the HIAC counter.

Table V-1 Particle Count Comparisons for Particles >100μ in Size (Ref 7)

HIAC	Microscope	HIAC Mean	Microscope Mean
0	0		
0	0		
0	0	0.0	0.0
0	0		
0	0		
3	4		
1	5		
0	1	0.8	3.8
0	5		
0	4		
0	3		
0	1		
0	3	0.4	2.4
2	3		
0	2		
5	14		
5	10		
3	8	4.2	10.0
2	11		
6	7		
1	5		
0	6		
2	10	0.8	6.6
0	9		
1	3		
23	22		
17	24		
18	20	14.4	18.0
6	12		
8	12		

D. R. Walker of Douglas Aircraft Corporation reported the results of a study that examined the calibration and performance of the Coulter, HIAC, Royco, Sperry and URI counters in detail (Ref 8 and 9). In discussing the manner of conducting the study, the author states, "Initially, fibers were examined, but were omitted in the test program because their length-to-width ratio was not suitable for accurate analysis by the automatic counters." The same paper provides a very cogent summary of the correlation problem, and recommendations for solution. The following is a direct quotation from Ref 8:

> "In a recent paper presented by Dr. R. D. Cadle of Stanford Research Institute, Menlo Park, California, it was stated that 'The size of a given particle may vary markedly depending upon the definition. This does not mean that one definition is more nearly correct than another, but it does mean that the definition of size must be considered when interpreting the results of particle size determinations.'
>
> "This statement defines one of the major problem areas in the use of automatic particle counters. Each instrument sizes particles by a different principle, thereby causing difficulties in correlation. This difficulty may be overcome by determining the correlation factor between any two methods, or by calibrating particle size measurements to the same standard. Calibrating to the same standard appears to be a more reasonable approach, but the groundwork for such a program has not yet been laid. It is a challenge that must be accepted by instrument manufacturers and users alike. Technical societies such as the Society of Automotive Engineers, the American Society for Testing Materials, and the Aerospace Industries Association can help pave the way by specifying parameters, definitions, and procedures for developing a single standardized method acceptable for calibrating all counting techniques.
>
> "The need for standardization becomes more apparent as various definitions of size, currently used in the aerospace industry, are examined. For example, the following list of definitions includes size measurements by both microscope and automatic counters.

a. The distance between two defined points on a particle measured by a calibrated scale.

b. The diameter of a circular dot with the same area as the projected area of the measured particle. Relative areas are determined by visual observation or light measuring techniques.

c. The diameter of a spherical particle having the same volume as the particle being measured. Sizing may be done by sedimentation, electrical resistance, or electrical capacitance.

d. The diameter of a spherical particle that deflects the same amount of light at 90° as the particle being measured. Sizing is done by light measuring techniques.

e. The diameter of a calibration rod that deflects the same energy from its end as the particle being measured. Sizing is done by ultrasonic energy measuring techniques.

"Each of the above definitions was derived to suit a specific principle of operation. With this condition existing, the least that can be said is that correlation determinations between various sizing techniques will be difficult."

Correlation data between counts made by the HIAC and Royco counters and microscope methods for particles larger than 80μ, taken from the same report, are given in Table V-2. (The 390 count in the first microscopic count is not explained in the document.) The poor correlation between the counts by the three techniques is obvious.

Reference 10, published by the AF Materials Laboratory, Wright-Patterson Air Force Base, reported tests of the Cintel Flying Spot Resolver, the Coulter Counter, and the HIAC Particle Counter in sizing and counting particles in hydraulic fluids as compared to each other and with ARP 598.

Table V-2 Particle Count Comparisons, HIAC, Royco and Microscope (Ref 9)

HIAC	Royco	Microscope	
		First Reading	Second Reading
30	4	33	390
40	10	61	
20	249	59	66
36	128	46	
10	0	0	
60	3	30	
43	14	91	
90	31	39	
320	36	142	

Table 5 of Ref 10 presents a comparison of microscope, Coulter Counter, and HIAC Counter data. The largest size category reported is >51μ. The comparison counts for this range are presented in Table V-3 for a number of fluids and supplies as given in the table. The total data for the ARP versus HIAC comparisons from this table are presented as individual particle count comparisons.

Table V-3 Particle Count Comparisons for Particles >51μ in Size (Ref 10)

ARP	HIAC
205	40
1,280	40
148	20
140	40
75	90
65	40
57	40
95	20
60	180
70	0
30	20
45	20

Examination of hundreds of particulate samples taken from many different propulsion and pressurization systems at many facilities over a period of many years shows that the samples contain 100μ spheres as well as fibers 25 by 300μ in dimension, among many other greater and lesser deviations from the greatest volume-to-surface area ratio possible. In an attempt to control operational fluid particle and fiber size to a maximum of 175μ absolute, a particle reported by a counting machine as being of this size could be a sphere of 175μ (diameter 24,000 square μ projected cross sectional area) or it could be a fiber 24μ in diameter and 1000μ (1 mm or approximately 1/25 of an inch) long. Thus, the objective meaning of "longest particle dimension" has little relationship to the population size quantities reported by these machines in the types and sizes of particulate matter of interest to this study.

It is the concensus of the industry, as documented in Chapter II of this report, "Results of Survey Activity," that the deleterious effects of particles on propulsion systems are not related to the longest particle dimension anymore than they are related to projected cross sectional area. In fact, the majority of those authorities interviewed stated that they considered the cross sectional area parameter to be more inherently relatable to system requirements than is the longest particle dimension. Since automatic particle counting machines measure a parameter indicative of the projected cross-sectional area of the particle, it is believed that the particle size definitions contained in the contamination control criteria specifications should be changed to reflect this parameter.

The important point, however, is that these new parameters of measurement must be explicitly defined for what they are -- the diameter of a circle of equivalent area to the projected cross sectional area of the particle in random orientation, or whatever is seen by the machine. It is recommended that the NASA-controlled contamination control criteria specifications be changed to allow for parameters that can be measured by particle counting machines as alternatives to the existent longest dimension criteria.

The organizations that manufacture the principal types of particle counters were visited during the latter part of the study with the following results.

Both Royco and HIAC counters have impressive histories of accomplishment and supporters among those who have tested them on a laboratory basis. Both demonstrate good reproducibility when reporting smaller particle size category populations in liquid solvents and in MIL-H-5606 hydraulic fluid.

At the time of the writing of this report, neither manufacturer had responded with specific proposals to meet the objectives of the study. Information received recently indicated that no test program was in progress at either facility to establish capabilities of either instrument for any of the fluids of interest. In the absence of any specific data in support of general statements of capability, the Royco and HIAC counters cannot be recommended for use at this time.

On the basis of these results and upon pure conjecture as to the resources available to these facilities for an extensive research program to determine wider application of these devices, especially in cryogenic fluid media, it is concluded that development funding will be necessary to obtain these data from either of these facilities.

The visit to Sperry Products Division in December of 1965 established that the ultrasonic concept for particle detection had not seen any further demonstratable development from that reported in Ref 11.

Since, however, Ref 11 establishes that both the amount and rate of increase of standard error using the Sperry Counter are significantly lower than those obtained with the HIAC counter, it is recommended that this method also be considered for development.

The Millipore Filter Corporation was visited in December of 1965. The Micro-Scan is highly specialized and is limited to hydrocarbon-based fluids. It is semiquantitative in that it distinguishes and quantifies changes in capacitance due to the total volume of foreign material in the sample stream without distinguishing particles, moisture, or some other fluid. It is excellently adapted to on-stream quality monitoring of aircraft fuels, for which purpose it was developed. However, radical revision in the aerospace philosophy of fluid contamination control would be required for the Micro-Scan to be used for particle detection and quantification. Since this is not recommended, or expected to come about independently, it is recommended that no further exploration of this concept of particle monitoring for the study objectives be made.

Conclusions - The following conclusions were reached concerning particle monitoring concepts:

1) The recommended concepts for detection and quantification of particulate contamination in the storable liquids and gases included in this study are collimated light occlusion, light scattering, and ultrasonic reflectance when and if the applicable criteria are changed to admit application of these concepts;

2) Confirmation of application of the recommended concepts to storable liquids, excepting RP-1, or exploration of application to the cryogens is not likely to occur unless it is funded;

3) For particles larger than 100μ, including fibers, the relationship between microscopic determination of the longest particle dimension, and that reported by the automatic counting devices, deteriorates with increasing particle size;

4) There are no operational, developmental, or conceptual configurations for automatic particle counting devices that are capable of meeting the existent contamination control criteria applicable to the study;

5) Until such time as the applicable criteria are changed to allow the use of the automatic particle counters, the in-line filter holder and counter (ILFHC) represents the most significant advance in particulate detection and quantification in the operational fluid systems. This device, when considered as an instrument providing on-stream, on-site detection capabilities (and having the capacity for representative dynamic sampling accumulative for an unlimited sample flow period, but requiring manual, in-place interpretation and manipulation), may be regarded as a semi-automated monitoring device.

2. Purity Monitoring

a. General

Present Practices - During the survey of launch and static test facilities only a few instances of on-stream monitoring of operational systems for the fluids of interest were found. These were:

1) Flame-ionization hydrocarbon analyzers for total hydrocarbons. These served both as continuous analyzers and periodic analyzers;

2) Moisture meters that read by the hydrolysis of absorbed water on hygroscopic plates. These are used for both continuous and periodic monitoring;

3) The fritted silver -- KOH type O_2 analyzer for oxygen content in gases. These all were used as continuous on-stream analyzers;

4) A gas chromatograph that was programed by electronic tape for on-stream measurement of trace gas contaminants in hydrogen;

5) An instrument designed to measure the ortho-para ratio of hydrogen continuously on-stream;

6) A liquid process moisture meter that measured moisture content in petroleum products. This device is used continuously on-stream.

All of the organizations visited used various means of instrumental analysis in a laboratory for some contamination parameters in all of the fluids of interest, with the exception of N_2O_4. However, a number of these organizations still depended quite heavily on wet chemical analysis. Due to the scarcity of on-line monitoring and the heavy reliance on wet chemical methods, an accounting of present practices for analytical methods will not accompany the design criteria established for each of the fluids concerned. In general, laboratory methods of instrumental analysis consisted of gas chromatography; infrared, ultraviolet, visible, and mass spectroscopy; electrolytic-type hygrometers for moisture content; and flame ionization meters for total hydrocarbon analysis.

At the present time there are some specific instruments that appear promising for adaptation to on-line use for the contamination parameters in the fluids of interest. These have maximum applicability to the gases. The instrumentation presently used for continuous monitoring of the fluids of interest at Kennedy Space Center consists of the flame-ionization total hydrocarbon analyzer and the electrolytic hygrometer moisture monitor. These instruments are installed in the high-pressure nitrogen and helium systems. One set of these instruments is located just downstream of the compressors in the converter-compressor buildings and another set is located just downstream of the storage batteries in the pad area. Present plans call for a parts per million (ppm) oxygen analyzer to be installed in each of the above locations. NASA intends to instrument for continuous monitoring as many of the contamination parameters in as many of the propellants and pressurants used for the Saturn vehicles and the Apollo spacecraft as practicable.

Commercially Available Instrumentation - Ideally, the ultimate outcome of this study would be a sensing probe connected to some type of readout device that indicates the amount of every contaminant in all fluids. Such a device does not exist and it is doubtful that such a device can be developed in the foreseeable future for use in the Saturn programs.

With the above considerations in mind, a survey of the instrumentation manufacturers was made. The intent of this survey was to find available instrumentation capable of providing continuous monitoring of one or more of the parameters of interest to the study.

Because very few types of continuous monitors were found, an alternative approach was formed. This approach was to provide an integrated system of continuous monitors for parameters that could be so monitored, and rapid recycle periodic monitors for those parameters that are impossible to monitor continuously. This integrated system comes as close to the idealized concept as is possible.

Even though the system is not totally continuous, it will provide a better confidence level with regard to the condition of the propellant or pressurant that is loaded on the vehicle than does the present method of batch sampling.

b. Information Received from Instrumentation Manufacturers

The survey of instrument manufacturers was discussed in Chapter II. Several of the manufacturers listed there submitted rather detailed proposals for instrumentation to measure some or all of the parameters of interest. The information received from these manufacturers is summarized in this chapter.

1) Industrial Instruments

The only instrumentation that Industrial Instruments manufacturers pertinent to this study is an electroconductivity cell to determine moisture in N_2O_4. This instrument is a probe that would probably use stainless steel electrodes, coated with gold and covered with platinum. The insulation and packing would be made of Kel-F. It would have a cell constant of K = 0.01, designed to operate for the expected range of 10^5 to 10^7 ohms. The instrument could be designed to fit a minimum 1¼-in. NPT stainless pipe boss. The cell may be used without amplifiers or repeaters up to 600 ft from the electronic portion of the unit, provided a low capacity, low resistance cable (e.g., No. 12 wire), separated at least ½ in., and placed in a separate conduit is used. Industrial Instruments recommends that a Solu Meter (weighing only 2 to 3 lb and using an unbalanced bridge circuit) be located close to the sensor to provide a signal, proportional to the conductivity, of 0 to 5 volts for a landline distance of 500 to 1000 ft.

Industrial Instruments estimated that empirical recalibration would be necessary only about every 6 months, and that this would require only a check in a standardized solution of KCl. It would not be necessary to restandardize in N_2O_4. The cell and the Solu Meter can be made rugged enough to withstand unfavorable environments that are expected relatively close to the vehicle. No specific vibration studies have been performed on these units, but they have performed and have met military specification vibration requirement tests on similar equipment. Automatic temperature compensator mechanisms of many

sorts are available from this organization with response times within 1 sec. The response time of the most intricate transmission display and recording setup would be about 1 sec from the change in conductivity also. Industrial Instruments will not establish the relationship between moisture content in N_2O_4 and its electrical conductivity, nor will they perform functional testing of the equipment with this fluid.

Since alarm signals and relay equipment to initiate corrective action are routinely supplied by this company, the provisioning of this capability to initiate system shutdown is no technical problem.

The conductivity-testing current applied is AC of a frequency that can be selected for maximum efficiency to avoid polarization effects and to minimize capacitative effects.

It is doubtful that this analytical technique can be adopted for use in this program because the instrument cannot discriminate between changes in electroconductivity produced by changes in moisture content or that produced by metal ions. It is highly probable that this instrument would have to be used with a polarograph to distinguish the moisture content from the metal ions. This is not the most practical approach for the requirements in this study.

2) Gow-Mac Instrument Co.

The Gow-Mac Instrument Co. offered two instruments. One is designed for measuring helium purity, and the other is designed for determining the ortho-para ratio of hydrogen.

The helium purity analyzer has a sensitivity capable of indicating 99.995% purity, but it is doubtful that it can give a quantitative readout in this range. It can provide a nonquantitative signal that will indicate helium purity over or under the 99.995% requirement.

Because it appears to be more practical to determine helium purity by measuring the concentrations of the impurities and then subtracting total percentage of impurities from 100%, rather than measuring the purity directly, it is highly unlikely that the Gow-Mac helium purity analyzer will be used. However, if a need develops to determine helium purity directly, this instrument will be very satisfactory for this application.

The Gow-Mac gas analyzer uses thermal conductivity techniques to determine ortho-para hydrogen ratios. The instrument is highly sensitive to changes in thermal conductivity caused by changes in the ortho-para ratio. It is capable of analyzing a gas stream that is flowing at a rate of 225 cc/minute. Measurement of the ortho-para ratio is not now considered necessary; however, if NASA wants this measurement, the Gow-Mac instrument will suffice. In addition, other instruments are available that can perform this analysis.

3) Air Reduction Company (Airco)

Airco manufactures a supersensitive gas chromatograph with threshold limits as low as 5 parts/billion. Airco believes this instrument is capable of performing all the analyses required by this program. However, the instrument is quite large, requires a considerable amount of operator attention, and the analysis is quite lengthy. While this instrument is entirely satisfactory for laboratory analysis, it is not really capable of performing the tasks required by a rapid-response in-line analyzer.

4) Bendix Corporation, Greenbrier Division

The Bendix Corporation, Greenbrier Instruments Division, proposed an analyzer for each contaminant in each fluid of interest.

Basically, the analyzers would consist of the following:

Process gas chromatographs with semicontinuous measurements;

PPM oxygen analyzers with continuous measurements;

Total hydrocarbon analyzers with continuous measurements;

Total halogen with continuous measurements;

Thermal conductivity with continuous measurements;

Dewpoint hygrometer with continuous measurements;

Electrolytic hygrometer with continuous measurements.

These instruments, in various combinations, have the ability to perform the analyses required according to Bendix.

The Bendix proposal states that the analyzers, as recommended, are based on completely developed, reliable, and thoroughly proven commercially available units. The computer recommendations are based on existing high-speed digital computers that have demonstrated reliability. The software for the computers and for the computer control of analyzers is now readily available.

The system as proposed would be a direct outgrowth of the Time-Shared Chromatograph system developed by Bendix-Greenbrier in conjunction with Chem Systems. This system consists of a high-speed digital computer that monitors and controls all of the analyzers in a particular analysis complex. The computer performs all of timing functions, integrates the signals, institutes malfunction checking routines, and acts as a communication link with a centralized computer and data processing facility. This system has the ability to scan and control all parameters involved in the analysis complex and indicate an alarm condition.

All analyzers are designed so that the electrical controls can be separated from the sensing element by distances up to 1000 ft. The sensing portion of

each analyzer can be located adjacent to each sampling point, thus facilitating sampling and minimizing any lag time that may be engendered by running lengthy sample lines.

Bendix proposes that a computer monitor and control all analyzers in the analysis system. In a system of this nature, the computer assumes all functions of operation of the instruments except for the sensing of the components to be measured. A highly reliable, proven high-speed digital computer is used to control all of the analyzers, integrate their signals, and locate position of all samples.

The computer will sequence, control, and monitor the operation of all instrument systems in the analysis complex. Detector output would be strobed approximately every 0.4 sec for a resolution in time of 1:1500 on a 600-sec chromatogram. The computer system will also have the capacity to make available analysis information via an I/O buffer register to a large central computer system. The analyzer computer system will be able to make reasonable checks on each analysis and give visual and audible alarms for out-of-limit instruments and variables.

The instruments proposed by the Bendix Corporation for the analysis of specific contaminations in each of the fluids of interest are discussed in the following paragraphs.

Nitrogen - The analysis of nitrogen to a measurement of 99.99% purity is exceptionally difficult. There have been many attempts to measure the purity of nitrogen by thermal conductivity using a source of extremely pure nitrogen as the reference gas. This has not proved successful. Bendix recommends the measurement of individual impurities as the basis of complying to this specification. For example, oxygen, total hydrocarbon, and moisture content can be measured quite accurately. Even if a good method existed to measure the 99.99% purity, the number of significant figures involved would not yield sufficient accuracy to cover the specification.

Oxygen - Oxygen can be measured using a galvanic cell oxygen analyzer with a full-scale range of 0 to 50 ppm. The accuracy of this measurement would be approximately 1 ppm and reproducibility, the same. The speed of response of this continuous measurement is quite good. The life of such an instrument on a stream such as this is approximately 6 months, at which time it is necessary to replace the galvanic cell. This is true for any galvanic cell type oxygen analyzer.

Total Hydrocarbon - A total-hydrocarbon analyzer using the hydrogen flame ionization detector is easily capable of measuring 0 to 5 ppm full scale, with an accuracy of approximately 0.1 ppm and a reproducibility of approximately the same magnitude. This instrument will measure all the hydrocarbons present in the stream, and is based on essentially a carbon-hydrogen counter principle. This is an analyzer based on continuous sampling and yielding a continuous analysis.

Moisture Content - The moisture determination can be made using one of two instruments. The instrument that could do this job would be an electrolytic hygrometer which would give a readout in ppm by volume. A range of 0 to 200 ppm is easily attainable. In fact, a range of 0 to 5 ppm is achieved with this type of instrument. The second type of instrument is a dew point hygrometer which would give a readout in terms of dew point or torr.

Helium - At present Bendix does not know of any method of measuring the helium purity directly. To analyze 50 ppm total impurities as a group is exceptionally difficult when the physical and chemical properties are so considerably different. To attempt such a measurement by thermal conductivity involves the use of an extremely high concentration of helium for reference, or else the helium must pass through one side of a thermal conductivity cell and then the impurities must be removed and a measurement of pure helium made on the second side of the cell. A measurement of the helium purity could be attempted chromatographically except it involves the measurement of a large electrical signal which must be compared to an extremely small one. Thus, the feasibility

of measuring infinitesimal electrical differences is impossible, particularly to the degree of significant figures required. To achieve the accuracy and precision desired in this measurement, it is recommended that the measurement of each impurity be made, fed into the computer, and totaled. The measurement is accomplished as described in the following paragraphs.

Hydrogen - The hydrogen content of this stream can be determined by a process gas chromatograph that uses pure nitrogen as a carrier gas. A range of 0 to 10 ppm full scale can be effected by using an amplifier. The accuracy and precision of this measurement would approach 0.4 ppm. The readout is semicontinuous at approximately every 5 to 6 minutes. The sample to this instrument is flowing continuously.

Oxygen and Argon - A process gas chromatograph can measure oxygen and argon, using helium as a carrier gas with a full-scale range of 0 to 10 ppm. This can be accomplished with an accuracy and reproducibility of approximately 0.4 ppm. If it is desired, a signal for oxygen and argon can be given for each gas separately. However, it is more convenient to leave the two gases combined.

Nitrogen - Nitrogen can be measured on the same process gas chromatograph as supplied for the oxygen and argon analysis. A full scale range of 0 to 50 ppm can be provided with an accuracy and precision of approximately 0.8 ppm. The time of analysis for the oxygen, argon, and nitrogen is less than one minute.

Moisture Content - Two types of instruments are available to determine moisture content. An electrolytic hygrometer can be provided to measure 0 to 10 ppm full scale. This is a continuous measurement and can be accomplished with an accuracy and reproducibility of 0.5 ppm. An alternative to the electrolytic hygrometer is the dew point hygrometer which can read dew point or torr as desired.

Total Hydrocarbon - A total-hydrocarbon analyzer can be supplied to measure 0 to 5 ppm full scale with an accuracy and reproducibility of approximately 0.025 ppm. This is a continuous analysis and the sample

flows continuously. This uses a hydrogen flame ionization detector and the speed of response is exceptionally fast.

Other Gases (Neon, Krypton, CO_2, etc) - The process gas chromatograph using pure helium as a carrier can be supplied to analyze 0 to 20 ppm neon, krypton, and CO_2, respectively. In fact, other such gases could be analyzed, if desired. The time of analysis for these three components would be approximately 4 to 5 minutes total. Higher speeds may be achieved if lower resolution is acceptable. However, the use of two such instruments would keep the time cycle lower, and would make the basic chromatograph simpler in construction.

Condensable Hydrocarbon - A flame ionization chromatograph can be supplied to measure various hydrocarbons with boiling points greater than 76.8°C. Each of the components could be measured with a full-scale range of 0 to 2 ppm for each peak. This can be accomplished with an accuracy and reproducibility of approximately 0.08 ppm. Analyzer time of 4 to 5 minutes is easily achieved and faster time can be accomplished with additional laboratory work.

Oxygen - The analysis for oxygen can be broken down into three requirements. First, consider Grade A for fuel cells. The analysis of purity as such is extremely difficult since the requirement is to measure 50 ppm total, and once again the impurities have varying chemical and physical properties. The analysis of impurities is not too difficult and can be accomplished as described below.

A flame ionization chromatograph is proposed for the measurement of:

Components	Full-Scale Range (ppm)
Methane	0 to 10
Ethane	0 to 2
Propane	0 to 1
N-Butane	0 to 1
Acetylene	0 to 1
Methyl Acetylene	0 to 5

The time of analysis is expected to be approximately 5 to 6 minutes and may be made faster with additional laboratory work. The accuracy and precision for these measurements is ±2% of the full-scale range.

Total Hydrocarbon - A total-hydrocarbon analyzer utilizing a hydrogen flame ionization detector can be used to give a full-scale range of 0 to 20 ppm with an accuracy and reproducibility of approximately 0.8 ppm. This is a continuous instrument and uses a continuous flow in the sample.

Moisture - Two types of instrumentation are available for the moisture measurement; namely, the dew point hygrometer or the electrolytic hygrometer. Since the measurement requires 3 ppm, it is calibrated on the ppm range as opposed to dew point for the dew point hygrometer. The range of 0 to 5 ppm is recommended with an accuracy and reproducibility of 0.15 ppm.

N_2O, CO, CO_2, and N_2 - A process chromatograph using thermal conductivity as a method of detection is recommended with a measurement of these constituents:

Components	Full-Scale Range (ppm)
N_2O	0 to 5
CO	0 to 5
CO_2	0 to 5
N_2	0 to 50

These components can be measured with an accuracy and reproducibility of approximately ±2% of a full-scale range. Time of analysis for these compounds is approximately 5 minutes. If faster time of analysis is desired, additional laboratory work is necessary.

Halogenated Hydrocarbons - A special analyzer using a halogen detector can be used to determine these constituents to a range of 0 to 5 ppm full scale with an accuracy and reproducibility of ±2% full scale. This is a continuous analyzer and uses a continuously flowing sample.

Grade B for Breathing - The instrumentation that was recommended for Grade A for fuel cells is also suitable for Grade B for breathing. The only exception is the fact that the range of measurement must be changed to the appropriate values as listed for Grade B for breathing.

Grade C for Propellant - The instrumentation recommended for Grade A for fuel cells is suitable for Grade C measurements after appropriate range changes are made.

Hydrogen - The measurement of 99.995% pure hydrogen is extremely difficult. A considerable difference of thermal conductivity exists between hydrogen and oxygen or argon. However, the difference between hydrogen and helium is not large. Thus, a measurement of 50 ppm would have to be made to measure the purities of hydrogen directly. This would be pushing the outer limits of a thermal conductivity analyzer because the bulk of the measurement would be due to the hydrogen itself. The best approach to a measurement of this type is to separate the impurities from the hydrogen so that they can individually be measured. Such a method would once again be based on chromatography. The measurement of ortho and para hydrogen is somewhat similar since a reasonable difference of thermal conductivity exists between the ortho and para isomers and the contribution of oxygen, argon, and helium in their respective concentration would not affect the accuracy of measurement.

Ortho Hydrogen and Para Hydrogen - Bendix can supply a thermal conductivity analyzer to measure the thermal conductivity of the mixture as an indication of the ortho and para content.

Nitrogen, Oxygen and Argon, and Helium - A process gas chromatograph using hydrogen carrier and a thermal conductivity detector can be used to measure the concentration of these impurities. This is a semi-continuous method involving a time cycle of less than one minute and continuously flowing sample.

Components	Full-Scale Range (ppm)
Nitrogen	0 to 50
Oxygen and Argon	0 to 5
Helium	0 to 50

The accuracy and reproducibility for these components would be approximately ±2% of the full-scale range.

Total Hydrocarbon - A total-hydrocarbon analysis using a flame ionization detector can be used to measure 0 to 2 ppm full scale.

Carbon Bearing Gases (other than methane) - A flame ionization chromatograph can be used to specifically measure hydrocarbon gases other than methane. If measurement of carbon monoxide and carbon dioxide is required, a thermal conductivity detection system in a chromatograph would be necessary.

Monomethlyhydrazine* - The measurement of monomethyl-hydrazine and its impurities can be made on a process gas chromatograph. One instrument is capable of measuring the monomethyl hydrazine content as well as water and the other referenced soluble impurities.

Chemical Compounds	Full-Scale Range (%)	Reproducibility (%)	Accuracy (%)
Monomethylhydrazine	0 to 100	±0.5	±1
Water	0 to 2	±0.5	±1
Soluble Impurities	0 to 1	±0.5	±1

This measurement can be analyzed in approximately 4 to 5 minutes, and can be speeded up with additional laboratory work.

Aerozine 50 - Aerozine 50 can be analyzed using one process gas chromatograph. The chromatograph would use a thermal conductivity detector and helium would be the carrier gas. The following table indicates the measurement that can be accomplished.

*Analytical Chemistry 38, 338-340 (1966).

Chemical Compounds	Full-Scale Range (%)	Reproducibility (%)	Accuracy (%)
Hydrazine	0 to 100	±0.25	±1
UDMH	0 to 50	±0.25	±1
Water	0 to 2	±0.25	±1
Amines	0 to 2	±0.25	±1

This measurement can be analyzed in approximately 8 minutes, and can be speeded up with additional laboratory work.

N_2O_4 - A process gas chromatograph can make this analysis. The following measurement could be made:

Chemical Compounds	Full-Scale Range (%)	Reproducibility (%)	Accuracy (%)
N_2O_4	0 to 100	±0.5	±1
Water	0 to 0.5	±0.5	±1
NOCl	0 to 0.2	±1	±2

No method is currently available for the measurement of the nonvolatile ash. The chromatograph would be equipped with thermal conductivity detectors and helium would be used as a carrier gas. Analysis time would be approximately 4 to 5 minutes.

RP-1 - Greenbrier can supply instruments to analyze the mercaptan-sulfur, aromatics, olefins, and moisture.

A special gas chromatograph equipped with a flame photometric detector will be used to measure the mercaptan-sulfur. The mercaptan sulfur measurements are: range, 0 to 50 ppm; reproducibility, ±2%; and accuracy, ±2%. Estimated time of analysis will be approximately 6 minutes.

The second gas chromatograph with a hydrogen flame detector will be used to analyze the aromatics and olefins.

	Range (ppm)	Reproducibility (%)	Accuracy (%)
Aromatics	0 to 5	±0.5	±1
Olefins	0 to 1	±0.5	±1

The estimated time of analysis will be approximately 8 minutes.

A third gas chromatograph could be used to measure the moisture content of the RP-1 since RP-1 has a reasonably high boiling point. Bendix thinks that a gas chromatograph would be more suitable than either an electrolytic hygrometer or a dew point hygrometer. The dew point hygrometer will not work in this situation since the hydrocarbons involved have a higher boiling point than water. The moisture measurements are: range, 0 to 200 ppm; reproducibility, ±1%; and accuracy, ±1%. The estimated time of analysis will be approximately 2 minutes.

General Considerations - A number of factors must be taken into account to maintain a significant signal-to-noise ratio. In the case of thermal conductivity detection in a process chromatograph, the following must be considered:

1) Temperature control must be within 0.01°C;

2) The stream sampling technique must be based on high precision and backpressure effects must be considered. This is accomplished by use of sample shutoff valve to eliminate backpressure by allowing the sample to achieve equilibrium and by an extremely good temperature control;

3) A dc power supply to the detector current must be rugged, drift-free, stable, not influenced by line voltage fluctuations, and noise-free;

4) All process fluids entering the analyzer cabinet must be in temperature equilibrium with the surroundings;

5) The signal quality must be such that amplifiers can be used without jeopardizing the signal-to-noise ratio.

The chromatographs outlined by Bendix are standard instruments designed to give a complete analysis in a conventional period of time. This required analysis time can be reduced by a factor of one-half to two-thirds by employing techniques of high-speed chromatography. Bendix believes that all of the gas

chromatographic analyses could be performed in 2 minutes or less. It is important to note that all items of equipment, including the high-speed gas chromatograph, are commercially available and would require a minimum of development effort to adapt them for use in this situation.

5) Consolidated Electrodynamics Corporation (CEC)

CEC has proposed a solution to the contamination monitoring problem although no specific instrument has been chosen. The instrument that they visualize for actual application to this problem would in fact be a combination of many of their commercially available models. The CEC discussion is devoted to principles of operation of the mass spectrometer, discussion of sampling techniques, sensitivity and accuracy limits of the prospective instrument. The portion that contains the discussion and nomograph for sampling lines discredits some of the previous ideas concerning long sample lines. In light of this discussion it appears very practical to locate such an instrument in a central location, or even in the base of the ML and run sample lines to it.

The system proposed by CEC was originally planned in response to a request for a quote and technical discussion concerning the sampling and monitoring of the purge gases of the Saturn IB and Saturn V interstage areas. The intent was to detect leaks in the various vehicle hardware that would cause the formation of hazardous gas mixtures. The substances of interest, in a GN_2 carrier, were helium, H_2, O_2, RP-1, N_2O_4, MMH, and A-50. A mass spectrometer was the detecting device. The same technique applies whether the impurities are due to leaks from a system or the products of vaporization of a liquid from a process stream. The data generated by the mass spectrometer will be the same in both cases, although alternate methods of handling these data may be used.

The system layout described in the CEC proposal intended that the major portion of the monitoring unit would be enclosed in a single container, and mounted at some level of the ML that was central to the numerous sampling points within the Saturn V vehicle.

Sampling Concepts* - CEC has had experience in the quantitative accurate conversion of samples (liquid and solid) to the gaseous phase for introduction into mass spectrometers and other sensors. However, the sampling of a cryogenic fluid has received little development. They therefore assumed that suitable devices for the continuous quantitatively-accurate cryogenic vaporizers are available.

The sampling point will inevitably be removed some distance from the sensor. Regardless of what sensor is used, the problem of sample time transport to the sensor will be of chief concern to the user, especially where minute impurity concentrations in process streams of very high velocity are to be monitored.

It will prove advisable in the case of cryogens to locate the liquid sample vaporizer as close to the process stream as possible. Since the mass flow from the process stream to the sensor is a constant everywhere in the sampling stream, the density change during the change of phase from liquid to gas, with the vaporizer located nearer to the sensor and assuming an adequate mass flow in the gas phase, will result in an undue time lag due to the low liquid velocity. Partial vaporizing of the cryogen in a long sample line between the process stream and the vaporizer will degrade the quantitative accuracy of the sample as well as create an excessive time delay.

The vaporized sample passes through the sample line from the vaporizer to the sensor. If the inlet of the sample is considerably above atmospheric pressure, the sample may be allowed to pass to the sensor under its own pressure. Two difficulties arise when this transfer method is used. The higher pressure determines that for a given sample linear velocity, the mass transfer will be higher than at lower inlet pressures, and waste disposal becomes more difficult. At high pressures certain of the lower vapor pressure impurities may be in or near the dew point. As the gas expands along the sample line, some impurities will be encouraged to condense further because of the expansion-induced cooling of the line.

*This discussion and the accompanying nomograph were submitted by Mr. Gordon Culp of CEC.

If the sample gas is at or below atmospheric pressure, a vacuum pump may be used to create the pressure differential pressure required to transfer the sample. For practically all types of sensors the vacuum transfer has the disadvantage that the pressure at the sample line outlet is too low to operate the sensors. However, the mass spectrometer operating at approximately one billionth of an atmosphere pressure is ideally suited to the vacuum transfer technique.

The sample either passes by the inlet system at atmospheric pressure, then is subsequently lowered in pressure by carefully designed bypass pumping techniques, or is reduced in pressure by using the sample tube as part of the pressure reduction equipment of the sample inlet system. Assuming the latter, it is of great usefulness to be able to predict the time lag, T, and the throughput of the sample line.

A mass spectrometer employs a gold foil to continuously admit a sample with quantitative accuracy. The outlets of the sample tube are maintained at 1.0 torr by pumping away most of the sample via a bypass line. Viscous flow is maintained on the 1.0 torr side of the gold foil, since the dimensions of the gold foil housing are larger than the mean free path of the sample gas molecules at 1.0 torr. The gold foil is pierced with several small holes (approximately 100 millionths of an inch radius). The flow of sample gas molecules through the foil is statistically equal because of the geometry. In this way quantitative accuracy is maintained despite the 10^4 pressure drop across the gold foil.

Any tendency for the long sample line to behave as a chromatograph (not likely because of the high velocity of the sample stream) is unimportant because the flow into the sample tube is viscously controlled. The geometry of the bypass line to the sample pump is also viscously controlled. In this way the component of parallel molecular flow anywhere in the sample stream is very very small. The forbidden region in the nomograph, Fig. V-18, will show the effect on the character of the sample flow for values of pressure

Definition of Terms

$C = 2.9 \times 10^3 \, D^4 \, L^{-1\frac{1}{2}} \, (P_{in} + P_{out})$ 1/sec
D/L (in.)

$C \approx 10^3 \, D^4 \, L^{-1}$ at 1 torr at the high pressure end of the tube

$\tau = \frac{V}{C} = \frac{\text{Tube Volume}}{\text{Viscous Conductance}}$

$\tau \approx 10^{-8} \, L^2 \, D^{-2}$ seconds with $P_{in} = 760$ torr D/L (in.)

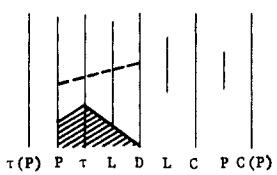

Legend showing forbidden area (shaded) where diameter-pressure combinations result in non-viscous flow. Dotted line is acceptable diameter-pressure.

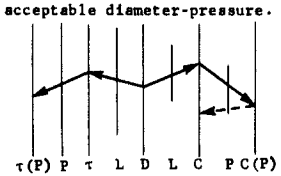

Legend for finding tube conductance and time lag. The dotted line gives vacuum pump speed required when P is pressure at low pressure end of tube or pump input pressure.

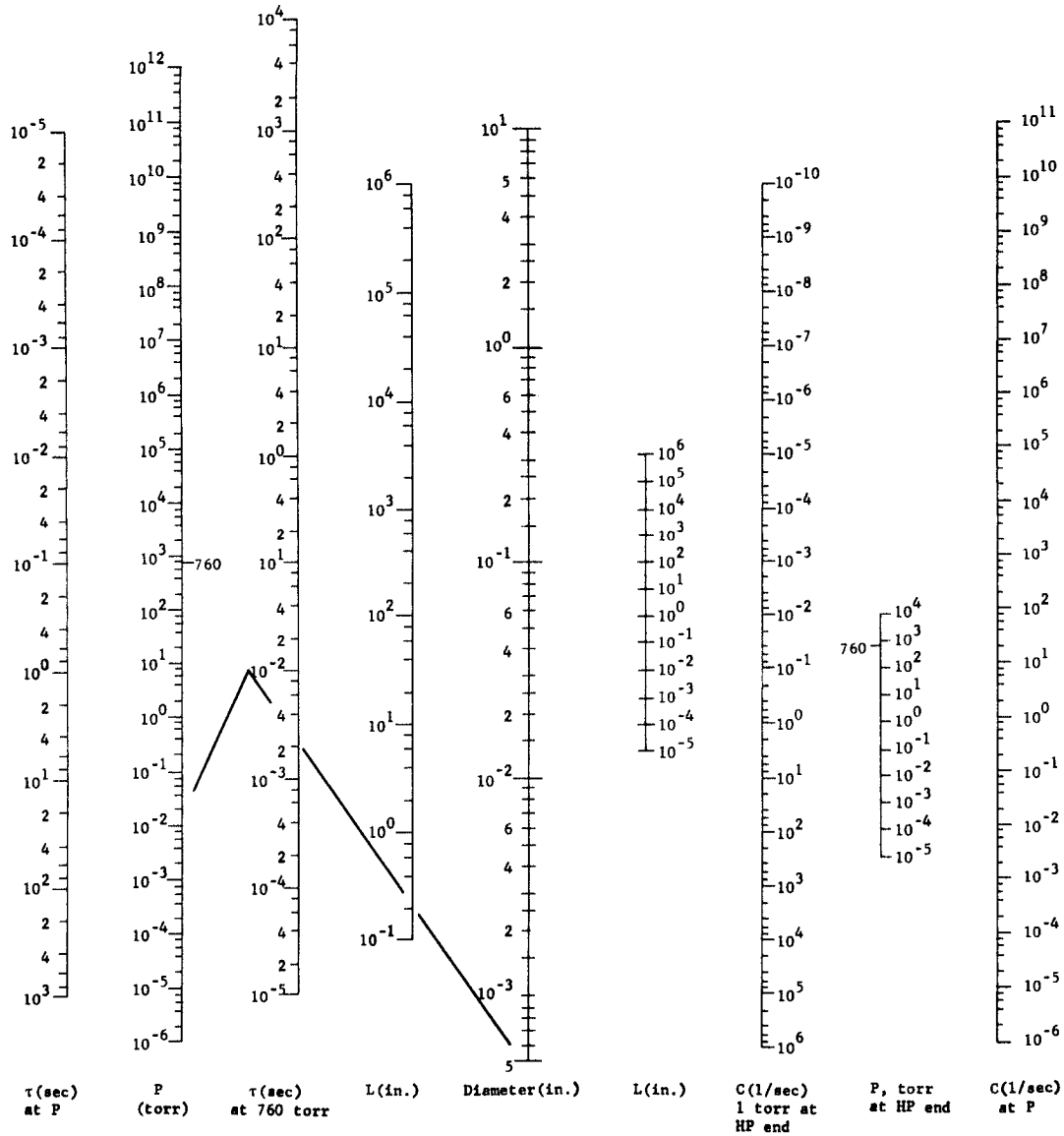

Fig. V-18 Viscous Flow in Tubes

and diameter. If the line directly between the sample tube diameter and the inlet pressure passes through any portion of the forbidden region, molecular flow will occur in the sample line. Thus the mass flow for each constituent in the gas mixture would be different, a function of that constituent's molecular weight. This simple guide permits the most efficient choice of sample tube dimensions and operating pressures that will still maintain quantitative accuracy.

The right-hand side of the nomograph (Fig. V-18) is used to determine the viscous conductance of a sample line from its dimensions and inlet pressure. One may choose a diameter, then a length, which will, when connected by a line to the "C" line, give the conductance in liters/sec of that sample line with 1.0 torr at the inlet and 0 torr at the outlet. The conductance at the point just determined, when connected to the actual inlet pressure desired ("P" line) and extended to the "C at P" line will give the conductance of the tube in liters/sec at that inlet pressure. It is then a simple matter to correct the volume/sec for the pressure at which the sample pump must operate (which, in the case of the mass spectrometer, will be something less than 1.0 torr) to determine the size of sample pump needed.

Conversely, if one is limited for practical reasons to a certain capacity sample pump, the process may be reversed, using the nomograph from right to left. CEC has done many such optimizations with very satisfactory results for instruments other than mass spectrometers, keeping in mind that the sensor used must be capable of responding to low sample pressures.

The size of sample becomes a limiting factor when large throughputs (pressure-volume/time) at low pressure are required for very fast response to changes in sample concentrations. Techniques at CEC are also employed for using more than one sample pump on a single sample line, operating at higher pressures, but maintaining quantitative accuracy by a proprietary technique.

The viscous conductance of the sample line is a linear function of inlet pressure. If it is desired to have the sensor operate so that it responds to and reads out percent concentration of impurities, the sensor is maintained at constant sample inlet pressure. A technique is used so that it is not necessary to control the pressure in the process stream. Pressure sensors and servo-controlled sample valves maintain the sensor at constant sensitivity. Naturally it is possible to electronically compensate the sensor output signals for changes in sensitivity due to changes in sample inlet pressure. However, the constant pressure control mechanism has two advantages not found in the electronic compensation technique. One advantage is that the sensor is protected from damaging pressure bursts from the process stream. The other advantage is that the sensitivity/pressure nonlinearity of most sensors (less so in mass spectrometers) is avoided, allowing the controlled inlet pressure to be intentionally fixed at the point of optimum performance of that particular sensor.

Chemical Considerations -

N_2O_4 and MMH - N_2O_4 and MMH have been found to react in the gas phase during routine mass spectrometer studies using a continuous inlet system. It was found that a quantitative accuracy of 5% was not attainable. A solid precipitate is formed that would plug or severely alter the performance of most sensors. The reaction is believed to be between HNO_3 (from water and N_2O_4) and any of the hydrazines, or with NH_3 (an impurity in hydrazines). Water for this reaction may come from atmospheric moisture leaks, or water contained in the hydrazines. This reaction will occur, even if the gases are not mixed, when a multiple stream sampling system is used because of the memory effects for both hydrazines and N_2O_4.

Memory Effects, Hydrazines - Hydrazines are very strongly absorbed in the sampling lines, as indicated by experiments using mass spectrometers and continuous sampling systems. There may be 10 sec or more purge time required before running a new sample after an analysis of one of the hydrazines, if a multiple sample stream system is used. The velocity of the purge gas appears to have little effect on removal of the absorbed hydrazines. It is also important to note that if a decreasing step change occurs in hydrazine concentration in a carrier in the process stream, some time will be required, above the sampling line transport lag, to reach equilibrium. However an increasing step change will be responded to with greater speed. Again, these difficulties will be present regardless of what type sensor is used.

Memory Effects, N_2O_4 - Mass spectrometer experiments performed at CEC using N_2O_4 samples in both batch and continuous inlet systems, have shown that N_2O_4 has peculiar properties. When admitted into a batch inlet system, constructed with high quality 300 series stainless steel, reproducible results are not obtained. Several successive batches of the gas mixture containing the same concentration of N_2O_4 must be admitted before an accurate record of the actual N_2O_4 concentration can be made.

The continuous high-speed inlet system, when used with the same N_2O_4 mixture shows much less tendency to require conditioning; however, the time required to reach equilibrium is still important. This phenomenon is apparently due to the higher pressures (X100) used in the continuous inlet system, which allows a more predictable N_2O_4 dissociation pattern.

<u>Background</u> - In any type of sensor the presence of background may cause errors in small concentration impurity measurements. The techniques used on CEC cycloidal mass spectrometers are to reduce the ambient pressure and to isolate the ionizing region from the ambient gases.

Reducing the pressure in the mass spectrometer is done by vacuum systems and analyzer parts that are bakeable to 450°C. Ion pumps and sublimation pumps are commonly used to lower the hydrocarbon background, because no lubricants or pumping fluids are used. Further hydrocarbon background reduction is attained by using all metal gasketing (usually gold), a necessity for 450°C bakeability. Cryopumping, usually LN_2 alone, and in some cases LN_2-cooled molecular sieves are used on CEC mass spectrometers. Some experimentation has been done on advanced techniques. The use of liquid He alone and LHe-cooled molecular sieves is very promising in achieving extremely low total pressures in the mass spectrometers.

In CEC cycloidal mass spectrometers, the sample gas, usually at 10^{-4} torr, is admitted directly into the ionizing source. The source is well shrouded and the sample flow out of the source is limited by the conductance of the openings in the shroud. If the total pressure in the mass spectrometer is 10^{-8} torr, there will be 10^{4} factor pressure drop from the ion source to the surroundings. Thus two important conditions are met; sample gas is continually and rapidly being replaced in the source from the gold foil, and practically none of the background gases can enter the source because of the large pressure differential. It is clear, if the background molecules do not enter the source, they will not be ionized by the electron beam, and will not appear as a spurious part of the impurity signal.

A CEC cycloidal analyzer having a nitrogen sensitivity of 10^{-12} torr/division is typical. If the sample is admitted to the source at the customary 10^{-4} torr, then one division on a 0 to 10 mv, 100 division-recorder would indicate an impurity with a concentration of one part in $10^{-4}/10^{-12}$ or 10^{8}, which would be 0.01 ppm. In essence, the impurity will appear to have a partial pressure of 10^{-11} torr. If the total pressure in the mass spectrometer is, for example 10^{-10} torr, and 10% of the total pressure is

due to the impurity being monitored, and the background was free to enter the ion source, its contribution to the total impurity signal would be equal, at 10^{-11} torr, to the contribution made by the sample. It becomes clear that low pressures, on the order of 10^{-12} torr, are desirable in mass spectrometers. There are techniques available that will maintain this pressure, although this pressure is seldom required for industrial applications.

As impurity concentrations approach the fractional ppm level, the effects of memory, sampling system tightness, and cleanliness become of paramount importance. It is not difficult to measure, for instance, 0.01 ppm with mass spectrometers, but an accuracy of say 5% would require the instrument to detect an increment of five impurity molecules out of 10 billion. It becomes clear at once that as the impurity concentration becomes very small, the certainty that the process stream is the source of the impurity vanishes. CEC feels that a concerted and undoubtedly expensive research and development program would be necessary to either solve the problems outlined above, find methods of avoiding them, or determine what performance limits are determined by the physical laws and conditions prevailing.

Sensitivity - The detection limit of the mass spectrometer for routine continuous analyses is generally quoted as 50 to 100 ppm. However, by using special conditions such as high sample pressure, high ionizing current, and with precautions to minimize background, instruments used only for trace analysis have been found capable of achieving a detection limit of 1 ppm for most gases. Most of the specific component impurity analyses specified for liquid and gaseous O_2, N_2, helium, and H_2 in launch complex process streams appear to be within the potential capability of mass spectrometer analysis. A few analyses requiring detection limits below 1 ppm level would be more difficult. Achievement of a ±10% accuracy at the 1 ppm level would be difficult and beyond any presently achieved results. Nonspecific analyses such

as "halogenated hydrocarbons" are not likely to be possible. Analyses are generally quite specific. Interferences between the various components to be determined are not likely to be a significant problem.

Those mass spectrometer analyses that are possible and those that are not possible are listed in the following tabulation.

LO_2 and GO_2 Grade A for fuel cells MSFC-Spec-399.

Purity	99.995%	Not possible
CH_4	10 ppm	Possible
CH_4	2 ppm	Possible
$CH_3CH_2CH_3$ and higher	2 ppm	Not possible
$CH_3CH_2CH_3$	2 ppm	Possible
Any <u>specific</u> HC	2 ppm	Possible
Alkyne and acetylene	0.05 ppm	Not possible
Total HC	14 ppm as CH_4	Not possible
Sum of specific HCs		Possible
Moisture	3 ppm	Possible
N_2O_4	1 ppm	Possible
Halogenated HC	1 ppm	Not possible
Specific XHC	1 ppm	Possible
Odor		Not possible
CO	1 ppm	Possible
CO_2	1 ppm	Possible
All others	30 ppm	Not possible
Sum of all impurities subject to probable accuracy ±100% of 1 ppm		Possible

Mass Spectrometer Capability - The following tabulation indicates the sensitivity to be expected from mass spectrometers in parts per million after some development of techniques.

Relative Sensitivity*	Substance	O_2	H_2	N_2	He
1.2	CH_4	1 ± 1/2	1 ± 1/2	1 ± 1/2	1 ± 1/2
0.87	CH_3CH_3	1 ± 1/2	1 ± 1/2	1 ± 1/2	1 ± 1/2
1.0	$CH_3CH_3CH_3$	1 ± 1/2	1 ± 1/2	1 ± 1/2	1 ± 1/2
0.75	$CH \equiv CH$	1 ± 1/2	1 ± 1/2	1 ± 1/2	1 ± 1/2
1.3	H_2O	1 ± 1/2	1 ± 1/2	1 ± 1/2	1 ± 1/2
0.43	N_2O	1 ± 1/2	1 ± 1/2	1 ± 1/2	1 ± 1/2
0.99	CO	1 ± 1/2	1 ± 1/2	1 ± 1/2	1 ± 1/2
0.89	CO_2	1 ± 1/2	1 ± 1/2	1 ± 1/2	1 ± 1/2
1.4	O_2	---	1 ± 1/2	1 ± 1/2	1 ± 1/2
0.86	Ar	1 ± 1/2	1 ± 1/2	1 ± 1/2	1 ± 1/2
5.3	He	1/2 ± 1/4	1 ± 1/2	1 ± 1/2	---
1.0	N_2	1 ± 1/2	1 ± 1/2	---	1 ± 1/2

Time required for each of the above analyses is approximately one second.

*Relative sensitivity, relative to N_2 = 1.0. None of the substances of interest have a mass spectrometer relative sensitivity much different from N_2, so no degradation of mass spectrometer performance should be evident due to insufficient sensitivity.

Nonspecific Analyses - The following tabulation shows the expected accuracy and techniques used for various nonspecific analyses.

Expected Accuracy		Technique
Purity	99.999 ± 0.001%	1 - (sum of all specific impurities analyzed) assuming only these specific impurities are present.
Total Gas Impurities	±3 ppm	Sum of specific gas impurities analyzed assuming only these gases are present.
Total Hydrocarbon Impurities	±3 ppm	Sum of specific hydrocarbon impurities analyzed assuming only these hydrocarbons are present.
Halogenated Hydrocarbon	±5 ppm	Sum of specific halogenated hydrocarbon impurities analyzed assuming only these halogenated hydrocarbons are present.
Odor	±1 ppm	Specific odor causing impurity.
Total Impurities	±10 ppm	Sum of specific impurities analyzed assuming only these are present.
Condensable Hydrocarbon		Specific hydrocarbon analysis allows comparing known physical properties of these with impurity data.
$\frac{UDMH}{N_2H_4} = \frac{47}{51}$	±2.5% by weight	M.S. set up for 1-ppm-level work cannot be used to monitor gross constituents with great accuracy, and vice versa.
Nonvolatile ash Gum S (sulfur bearing compounds)		Not applicable to gas mass spectrometry. CEC builds a mass spectrometer to analyze solid samples in the 10 to 100 microgram sample size region.
Aromatics, Olefins		Specific hydrocarbon analysis in some cases will give information as to the isomeric configuration of the specific impurity.

Technical Discussion of CEC System - The Purity Analyzer Unit proposed by CEC is a system for qualitatively and quantitatively analyzing gaseous mixtures from launch vehicles on a routine basis. The Purity Analyzer Unit (referred to as the unit) employs a perfect focusing type mass spectrometer. Mass analysis relies on crossed electric and magnetic fields. The mass analyzer is referred to as a cycloidal analyzer since the path of the ionized gas molecules forms a cycloid.

Gas sampling is facilitated by means of electrically operated valves. Provisions are made for automatic calibration of the unit. The electrical outputs of the unit are sufficient to convey all necessary hazardous gas status information to a remote station.

The unit is housed in a lightweight, strong enclosure. The enclosure will be constructed in accordance with the standard set by MSFC Procedure 10M01071.

The unit is divided into four subsystems for convenient operation analysis and description:

1) Gas flow control subsystem;

2) Inlet and analyzer subsystem;

3) Control and program subsystem;

4) Calibration subsystem.

Gas Flow Control Subsystem - The gas flow subsystem consists of pneumatic components necessary to perform sample stream selection, sample stream pressure monitoring, and sample stream preflow and gas pumping functions. It includes sample inlets, filters, a pressure monitoring and calibration valve, stream selection valves, a sampling manifold pressure monitor, a sampling pump flow balance network, and a sampling pump.

Inlet and Analyzer Subsystem - The inlet and analyzer subsystem consists of the sample introduction controls for the mass spectrometer, a cycloidal mass analyzer, and a vacuum system. Sample gas from the sampling manifold passes through a filter and a series of pressure control and reduction devices.

Because there will be a varying pressure in the inlet manifold caused by a constant lineal gas velocity being maintained in sampling lines of various gas conductances, a servo mechanism will be used to control the pressure at the high-pressure side of the mass spectrometer continuous sample introduction system.

The capillary inlet tube reduces the inlet pressure of a few psia to approximately 1 mm Hg at its discharge end. The capillary discharges into the gold leak assembly. Most of the gas is drawn off by the vacuum pump. The gold leak has very small orifices through which the sample gas is quantitatively reduced in pressure to approximately 10^{-4} mm Hg. The gas is then admitted into the ionizing chamber of the cycloidal mass analyzer. The flow is molecular in nature. To reduce the tendency for the sample introduction system to retain the residual sample and permit faster sample stream and analysis, no valves or pressure measuring devices are incorporated between the servo-controlled valve and the cycloidal mass analyzer.

The mass analyzer is maintained at a pressure of 1×10^{-6} mm Hg or lower by the vacuum system.

To prevent backstreaming of pump vapors into the mass analyzer, an activated charcoal trap is installed. Exhaust gases from the charcoal trap are fed to and pumped by an air-cooled diffusion pump. The outlet gases of the diffusion pump are extracted by both stages of a Welch model 1405 two-stage rotary piston vacuum pump, or equivalent. The interstage section of the pump is tapped to provide the vacuum for the gold leak assembly, thus eliminating one vacuum pump and its space, weight, and power requirements.

A Pirani thermal conductivity gage and an ionization gage monitor the mass analyzer pressure. The Pirani gage is used in the operational start program to activate the diffusion pump when the vacuum pump has reduced the analyzer pressure to the required low level.

Control and Program Subsystem - CEC has proposed a control and program subsystem that is used with its mass spectrometer. This subsystem provides control signals that energize the mass spectrometer in proper sequence and program the stream selection, the mass selection, the mass scan field plate supply, and a calibration routine. Both events-sequenced and time-sequenced programing is used. Operation can be accomplished manually or automatically; shutdown is also a programed operation. An analog-to-digital-to-analog memory that consists of an analog-to-digital converter, a digital memory and an analog output is used to store the output of the ion current amplifier. This memory is updated by each successive sequence. A binary memory is used to detect and send an alarm signal whenever contamination levels exceed the present limits. Ten amplifiers used as analog computing elements derive signals that provide interference compensation.

This control and programing unit allows remote, automatic operation of the sensing instrument with warning signals whenever present limits are exceeded.

Calibration Subsystem - The calibration subsystem incorporates calibration gas samples to be used in calibrating the unit. The calibration samples are stored in stainless steel laboratory lecture bottles at moderate pressure (300 to 400 psig).

Each unit will be supplied with a portable tester. The tester will weigh approximately 50 lb and is intended for use in acceptance testing, installation pretest inspection, operational pretest calibration, service, and maintenance of the unit. The function of the tester will be to serve as a temporary substitute for the remote control station. The tester also incorporates calibration gas samples to calibrate the unit. The calibration samples are stored in stainless steel laboratory lecture bottles at moderate pressure (300 to 400 psig).

CEC stated that the enclosure of the unit shall be designed to meet the requirements specified in MIL-I-6181, including RFI-tight gaskets for enclosure openings and interface connections, and that the

enclosure shall be rugged enough to withstand the ML environmental conditions specified for ground support equipments. As a design goal the dimensions of the enclosure will be 36x36x48 in., and the weight will be 300 lb. On the basis of commercial practices and components, the estimated dimensions with tolerances in inches are:

Width:	36 + 0/-0
Height:	36 + 12/-0
Length:	48 + 14/-0

The estimated weight of the unit based on commercial practices is between 600 and 800 lb. A design goal would be to reduce the unit's weight to 300 lb but at no detriment to the unit's performance. The requirements for high resistance to the environmental conditions and the hazardous gas compatibility requirements will hamper the achievement of the weight design goal.

The estimated power dissipation of electrical components in the unit is 3640 watts.

Temperature control of the components within the unit will be maintained by the nitrogen gas supply. A temperature sensitive gate valve in the nitrogen gas inlet line will regulate the flow of gas between 0 and 1500 scfm at 3.0 in. minimum of water pressure. Ducting from the nitrogen gas inlet to components within the unit that require discriminatory forced convective cooling shall be provided.

An overpressure relief valve, at the opposite end of the enclosure as the nitrogen gas inlet, shall be provided to maintain 3 in. of water pressure minimum within the enclosure. The gas conductivity of the relief valve shall be sufficient to pass the required 1500 scfm nitrogen gas.

A system to protect against excessive temperatures is incorporated into the unit.

All components internal to the unit's enclosure shall be installed so that the operational performance is not degraded by the external environment as follows:

Temperature -- storage without impairment, -5 to 160°F;

Rain -- simulated 4 ± 1 in./hr;

Humidity -- 95% at 71°C for 6 hr;

Fungus -- shall not support;

Salt Fog -- 5% NACl at 35°C for 48 hr;

Sand and Dust -- density 0.25 grams/cu ft in air at 100 to 500 ft/min for 2 hr, with relative humidity at 30% maximum at 25°C;

Vibration -- random and sinusoidal per NASA SP-4-38-D for Launch Complex 39, Section V abnormal holddown environments for level A, 120 zone 3.1.5.

An instrument similar to the one outlined in the CEC proposal, in conjunction with a sampling stream selector and programer would be capable of analyzing 15 different sample streams sequentially. The results of each individual analysis would be displayed on a digital display readout. An analysis and display would occur every 1 sec. If a parameter was found to be outside the specification limits an alarm signal would be activated and the sequential display process on that particular register halted until a decision is made.

The instrument would continue its monitoring and the out-of-tolerance parameter would be held in memory and displayed. There would be a limit to the memory capacity. The cost of a digital system is proportional to the memory capacity.

It is recommended that all digital data acquired during constituent flow be stored on digital tape. In addition the out-of-tolerance readings should not only signal an alarm and give a visual display but also instantaneously printout all out of tolerances as to location, parameter, and quantitative analysis for evaluation. This would allow for a system decision, as at this time automatic and remote system control is not proposed.

The CEC instrument would have a recycle time between 90 sec and 15 minutes depending on the complexity of the total analysis of a specific sample stream. The most complex analysis would be the total analysis, such as the total hydrocarbon analysis. The mass spectrometer would have to analyze for each specific hydrocarbon, feed this information to a totalizer that would then give a digitalized reading for total hydrocarbon. This process is rather lengthy and might require as long as 30 sec to accomplish for one sample stream. This, then would increase the total time required for the complete analysis of a specific stream and thereby increase the time required to complete the 15 min sample stream cycle. It is therefore quite foreseeable that a sample stream would be only analyzed once every 15 minutes. However, if the mass spectrometer is used with another instrument, such as a continuous total hydrocarbon analyzer, a total analysis for that sample stream would be accomplished in a very few seconds. This would then reduce the total time required for the 15 stream cycle to approximately 90 sec.

Note that the kind of mass spectrometer proposed by CEC has not been built. It is quite possible an extensive development program would have to be undertaken. The number of sample streams that the instrument is capable of handling can be increased or decreased from the 15 sample streams mentioned previously.

The instrument appears to be quite capable of handling all the analyses for Category I fluids (LH_2, LO_2, LN_2, GH_2, GO_2, GN_2, He), with the possible exception of the total hydrocarbon analysis. It does not appear to be as satisfactory for analyzing the Category II fluids (RP-1, N_2O_4, MMH, A-50).

6) Perkin-Elmer Corp

To meet the requirements of the proposed system on a continuous monitor basis, two major problems appear. The primary problem is to meet the sensitivity requirements when the contaminant is in certain carriers. The other is to minimize the time response. In certain cases, these two directly interact. These problems and the proposed solutions will be discussed later.

Perkin-Elmer stated that the objectives of this program cannot be met by any known off-the-shelf equipment. However, by minor redesign, certain equipment would become available in a short time.

Considering a typical loading system schematic, there are two principal monitoring points, one at the storage area and one at the base of the ML. At the sample point, each sensor would consist of the minimum equipment necessary to make a measurement and then to raise the signal level sufficiently to transmit it back to a central instrumentation room.

The central instrumentation room would contain all of the necessary electronics for system operation and readout. A permanent data storage is also considered desirable, either on paper or magnetic tape, during certain phases of the mission.

The individual sensors would normally use similar techniques, but be optimized for the contaminant of interest. For example, gas chromatography might be employed for three contaminants, optical absorption techniques for one contaminant, and a special device for the fifth contaminant. Although three would be chromatographic in nature, the specific column and detector for each might be different to obtain an optimum system. Table V-4 lists all of the contaminants and the proposed method of measurement. As will be noted from this table, the primary sensor technique proposed is gas chromatography. Recent developments in gas chromatography have a strong effect on this list. The development of porous polymer columns has allowed the continuous measurement of water vapor with no detrimental effect on the columns. An article, "Separation of Gaseous Mixtures Using Porous Polyaromatic Polymer Beads," by O. L. Hollis is being readied for publication in Analytical Chemistry. This paper was presented at a symposium on gas chromatography at the University of Houston late in 1965. An equally important paper, "Developments in Micro Gas Chromatography," by W. F. Wilhite is being readied for publication and was presented at the same symposium. The second paper shows that total chromatograph cycle times on the order of 15 sec to 2 minutes are obtainable. The column type

and the possible system time constants are very important considerations with regard to the feasibility of this proposed instrumentation system.

Specific details of the instrumentation will be discussed later.

Table V-4 Proposed Measurement Methods

Contaminant	Measurement Method
Oxygen	Gas Chromatography (molecular sieve)
Total Hydrocarbons	Gas Chromatography (SF 96)
Moisture	Gas Chromatography (porous polymer)
Nitrogen	Gas Chromatography (molecular sieve)
Hydrogen	Gas Chromatography (molecular sieve)
N_2O_4	None
Helium	Gas Chromatography
Oxygen plus Argon	Gas Chromatography (molecular sieve)
Total Impurities	Sum of Individual Measurements
Carbon-Bearing Gases	Gas Chromatography
Hydrazine	Gas Chromatography
UDMH plus Amines	Gas Chromatography
Monomethyl Hydrazine	Gas Chromatography
Existing Gum	None
Potential Gum	None
Sulphur	None
Mercaptan-Sulphur	Infrared (3.9μ)
Aromatics	Infrared (5.1μ)
Olefins	Infrared (11.0μ)

Perkin-Elmer stated that there is no known off-the-shelf instrumentation that will meet the requirements of the proposed program. Even if there were laboratory instruments capable of making the measurements, they would need general redesign for ignition and explosion proofing. Due to the nature of the proposed program, the units should be divided into a sensor head and an associated electronics subsystem. The sensor head must be near the storage tank and the vehicle. For this reason, the unit must be specially designed to meet NASA requirements for the launch complex. The electronics subsystem may be of standard construction assuming that it is in a building located an appropriate distance from the tank or vehicle.

Recent developments in gas chromatography make the instrumentation concept very feasible. However, because they are recent developments, they have not been completely reduced to practice for this specific application. Perkin-Elmer believes that further development of these techniques will produce the most usable system.

Infrared or similar optical systems will also be considered in detail in this section for monitoring specific materials. Other devices, as required in the instrumentation system, will be discussed as to applications for the proposed system.

Perkin-Elmer's system will accept a typical sample and produce a voltage level proportional to contaminant concentration. Perkin-Elmer will provide a digital display and a voltage output. Binary levels set off by threshold circuits will be provided as alarm level input commands.

Gas chromatography is the primary proven technique for making the chemical analyses at the levels indicated in Table III-1. To make the measurements by the techniques indicated in Table V-4, components shall be employed as indicated in Table V-5. The heart of any gas chromatograph is the selection of the proper columns and detectors. A preliminary selection of these components is shown in Table V-5.

The selection of the columns is quite firm, while the selection of detectors is not, for the reason that the detectors will have to be optimized for the particular carrier gas and column to obtain reliable measurements of the contaminant levels listed in Table III-1. Although quite feasible, a reasonable amount of research and development is necessary to produce a practical system.

Table V-5 Gas Chromatographic Techniques

Carrier Gas or Fluid	Contaminants	Column	Detector
Nitrogen	O_2, N_2	Molecular Sieve	Helium Ionization
	H_2O, CH_4	Porous Polymer	Helium Ionization
Helium	N_2, H_2, Ar plus O_2	Molecular Sieve	Helium Ionization
	H_2O, CO_2, Krypton	Porous Polymer	Helium Ionization
	Condensable Hydrocarbons	SF 96 on Gas Chrom P	Cross Section
Oxygen	Methane, Ethane, Propane, Acetylene, H_2O, NO, CO, CO_2, Halogenated Hydrocarbons, N_2	Porous Polymer	Cross Section
Hydrogen	O_2, N_2, O and P Hydrogen	Molecular Sieve	Helium Ionization
	O_2 plus N_2 plus Ar	Porous Polymer	Cross Section
	Hydrocarbons other than Methane	SF 96	Cross Section
A-50		Porous Polymer	Ionization Cross Section
		Carbowax on Gas Chrom Q	Cross Section
MMH		Porous Polymer	Ionization Cross Section
		Carbowax on Gas Chrom Q	Cross Section
N_2O_4	H_2O, NOCℓ	Porous Polymer	Helium Ionization

Helium - It is possible under laboratory conditions to analyze ppm trace impurities in helium using a helium ionization detector and a gas chromatographic column. Such a detector is sensitive to one part in approximately 10^9 for most impurities. In practice this should be considered, at present, as a last resort or alternatively as a subject for R&D. To analyze the sample gas accurately and reliably at the ppm level requires that the carrier helium be free of all contaminants to the level of one part in 10^7 at least, and that the impurity level should be constant. Neither of these conditions, particularly the latter, is easy to achieve even under laboratory conditions. Briefly, the practical problem is the maintenance of a low and constant impurity level in the helium carrier. It is possible to prepare ultrapure helium by the diffusion of superfluid helium through an otherwise impermeable porous plug. It is exceedingly difficult to maintain helium ultrapure because the materials of most known containers continuously effuse trapped gases and vapors.

These reservations are made not to indicate the technical incompetence of the method but rather to emphasize that compared with the standard direct methods of measuring individual contaminants (oxygen and water electrolytically) the technique is far from fully developed. Discussion of possible approaches for the development of a helium ionization gas chromatograph follows.

1) In developing ultrapure helium generators, if the local helium supply can be continuously purified to provide a carrier flow of 10 ml/min, or a sample flow of 1 ml/min, the worst problem is solved, and the design of a helium gas chromatograph would proceed on more or less conventional grounds. The purification procedures to consider are,

    a) Cold traps containing solid adsorbent,

    b) Continuous purification by the ionization of impurities,

    c) Use of superfluid helium,

d) a) is possible, but dubious for long-term automatic process control applications until more is known of the long-term reliability of the cold traps. b) is intriguing, but untried. c) is practical, but cumbersome and expensive;

2) The chromatograph would be of integral all-glass construction similar to that used with high-vacuum technique. It would incorporate solid adsorbent columns and a helium ionization detector. The design of the sample loop would require great care;

3) An unconventional approach to the chromatographic analysis that might ease the burden of helium purification is to feed the chromatograph continuously with the sample gas using it as the carrier gas. A single injection of 1 ml of ultrapure helium would be made to elicit the chromatogram. The impurities in the carrier helium would then appear as negative peaks due to their displacement on the column by the pure helium at the times of their normal emergence. The possible advantages of this approach are that the supply of ultrapure helium could be less and the continuous flow of sample gas through the system decreases the chance of its contamination by the supply lines, sample valves, etc. The purity of the ultrapure helium can be monitored by a detector included in its supply line;

4) Neon cannot be detected with sufficient sensitivity by this method.

Alternative Approach to Helium Analysis by GC - The cold trap GC procedure invokes a concentration of the trace impurities by condensation. Another method of concentrating the gases is by diffusion through a porous tube or thin tubular membrane. If such a process could provide a 100-fold concentration of the sample, the impurities could be analyzed by GC, using conventional thermal conductivity or ionization cross section detectors. This could give a substantial gain in reliability and economy. This approach is well worth exploring.

Oxygen - The really formidable problems for this flow are in the analysis of CO, CO_2, and halogenated hydrocarbons at the ppm level. Halogenated hydrocarbons can be analyzed easily at the ppm level by GC and an electron capture detector. However, the response of this detector to different halogenated hydrocarbons varies over a range of at least 10^5; so, unless the compounds are specified, the method is not of much use. If, as is likely, the only halogenated compounds present are the freons, we can be less pessimistic, for they are few in number and similar in electron absorption.

Hydrogen - The helium impurity could be a problem. The thermal conductivity and ionization cross section of helium and hydrogen are closely similar and the direct detection of helium in hydrogen by these methods would be unreliable at the 10-to-50-ppm range. The gas density balance might be worth considering since the densities do differ by 100%.

The other impurities (O_2, Ar, and carbon gases) could be dealt with by conventional GC after a concentration step either by condensation or diffusion. (Ref previous helium discussion.)

Hydrazines - With the recently available porous material columns of Hollis, the specifications should be fairly easy to meet by conventional process GC. An ionization cross section detector is probably the most reliable in this application although a thermal conductivity detector would probably serve.

RP-1 - In GC with electron capture detector, the olefins would be halogenated following reaction in a precolumn reactor with an appropriate halogen carrier. This is feasible, but so far untried. It certainly would be adequately sensitive.

It is possible that under ideal conditions using more efficient columns and helium of greater purity, limits of detection could be improved 10 times. However, for long-term process control application, it would be safer to consider the quoted limits as realistic and

regard the possible improvements as insurance toward reliability. The quoted limits of detection for gases in helium are tabulated below.

Gas	CO_2	CH_4	CO	O_2	N_2	Ar	H_2	Ne
PPM	0.02	0.05	0.06	0.07	0.2	0.2	0.5	1.0

These limits of detection are for gases added to the helium carrier. With a complete chromatograph, allowance must be made for the dilution of the sample in the carrier flow and for an analysis of several components.

It is reasonable to assume that the dilution need not exceed 10 times so the limits of detection in the sample gas may be 10 times worse than the quoted values. A compensation here is that by good fortune the sensitivity of the helium ionization detector increases proportionately with the retention time of the gas on the column, so the gases to which it is most sensitive (CO_2, CH_4, CO) are those most diluted on the column. An approximate estimate of the limits of detection of gases in a 0.2-ml helium sample with a carrier flow of 10 ml/min of ultrapure helium and a helium ionization detector are tabulated below.

Sample Size	Gas							
	CO_2	CH_4	CO	O_2	N_2	Ar	H_2	Ne
	PPM							
0.2 ml	0.3	0.5	0.6	0.35	1.0	1.0	1.0	2.0
2.0 ml	0.06	0.15	0.2	0.1	0.3	0.3	0.6	1.2

From these figures, it is clear that the direct chromatographic analysis of helium by GC without a previous concentration step barely meets the levels of Table III-1.

The analysis of the other gases by this technique, that is, ppm impurities in O_2, N_2, and H_2, will also require development due to the overload of the system by the major component. For these, a previous concentration step would seem essential.

Gaseous nitrogen, helium, oxygen, hydrogen, liquid hydrogen, A-50, MMH, and N_2O_4 require a highly sensitive gas chromatographic detector. While several detectors having such characteristics have been reported in the literature, the most practical appears to be that which involves ultrapure helium in a Lovelock-type argon detector.

The exact nature of the supports and modifiers should be evaluated, so that each stream can be done on a maximum of two columns and in as short a time as possible. Most of the separations would involve molecular and porous polymers. For hydrocarbons higher than propane, a gas/liquid chromatographic system would be used.

Without specifying the exact nature of the materials involved, the list of Table V-5 would be a general approach. It might be possible to use dual detector systems to simplify the overall system.

No problems are foreseen in developing the electronics necessary for this program. Standard chromatographic techniques would be employed for such processes as scaling, programing, and amplifying. Previous circuit designs are available from commercial and government programs.

Optical Sensing Devices - Optical sensing devices are used for contaminant monitoring in RP-1 rocket fuel. Contaminant monitoring can be achieved by optical sensing in the infrared and visible spectra.

Contaminants to be monitored in the infrared spectrum are tabulated below.

Contaminant	Amount	Wavelength of Interest (μ)
Mercaptan-Sulfur	0.005% Weight Max	3.92
Aromatics	5% Volume Max	5.1
Olefins	1% Volume Max	11.0

Contaminant to be measured in the visible spectrum are tabulated below.

Contaminant	Amount	Wavelength of Interest
Sulfur (in solution)	0.05% Weight Max	Visible Reaction Color Indicator
Sulfur (not in solution)	0.05% Weight Max	Mechanical or Chemical Filter and Densitometer

The infrared instruments use existing detectors, sources, and processing techniques. Investigation into the interdependency of spectral absorption at discrete wavelength vs flow rates, temperature, and total contaminants must be conducted to optimize each instrument.

Visible monitoring instruments will use standard existing detectors and sources. Investigation of optimum color reducing and indication, e.g., additives to the flow sample for sulfur signature, must be conducted. Sulfur not in solution will require further analysis of mechanical or chemical filtering.

The instruments for optical contaminant monitoring are basically dual-beam monitors that operate by sampling a source energy at a contaminant-absorption wavelength and a nonabsorbing wavelength as a reference on an alternative basis. The equipment will operate on the detected energy difference to yield an output that is a direct ratio of the energy absorbed to total energy emanating from a source, thus providing an indication relative to absorption. A dual-beam system is considered to minimize effects of other contaminants and RP-1 base.

Mercaptan Sulfur - Mercaptan sulfur will exist 0.005% by weight and approximately 0.005% by volume in the RP-1 stream. Figure V-19a shows a spectral absorption curve of Buthanethol ($C_4H_{10}S$), which is representative of a mercaptan contaminant in RP-1. The absorption band at 3.9μ is shown as that characteristic of the S-component of the Buthanethol and is the signature of mercaptan. The reference wavelength is chosen for minimum absorption at 4.7μ. Figures V-19b and V-19c, showing absorption characteristics of the other RP-1 contaminants, illustrate

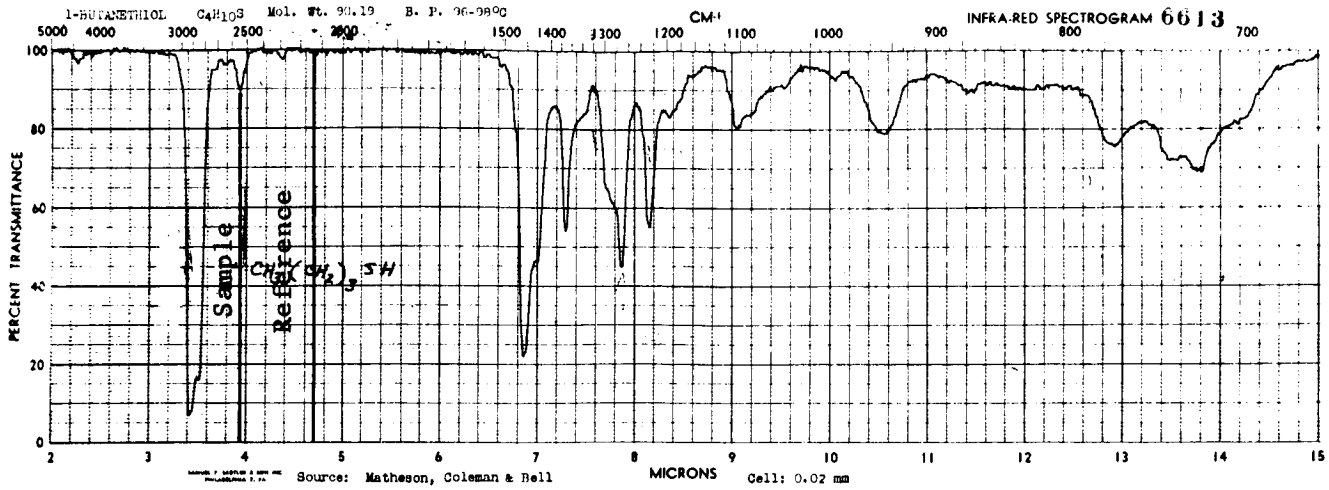

(a) Mercaptan-Sulphur

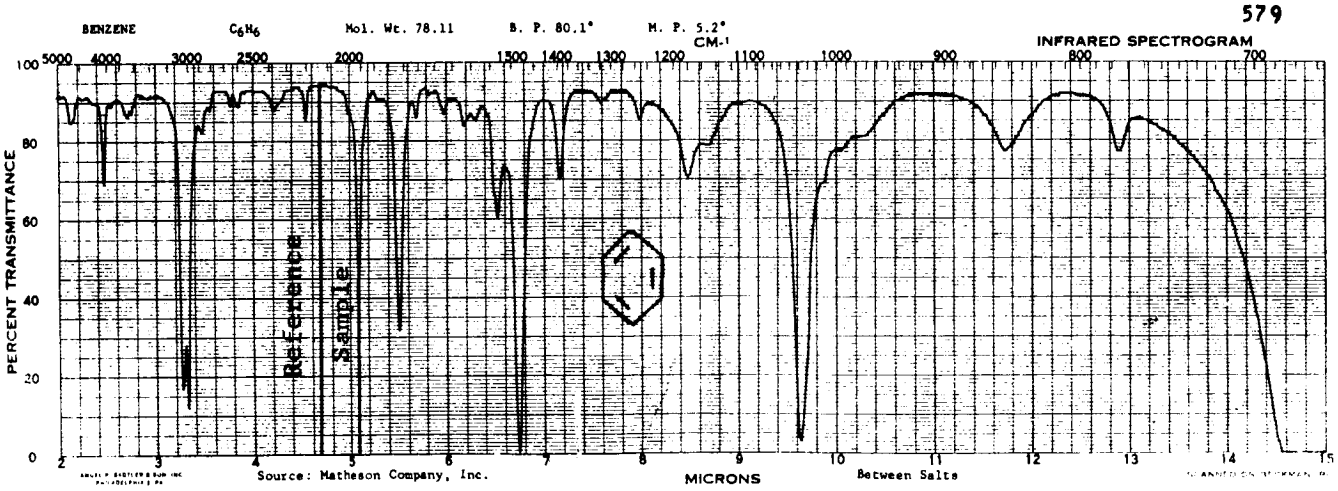

(b) Aromatic

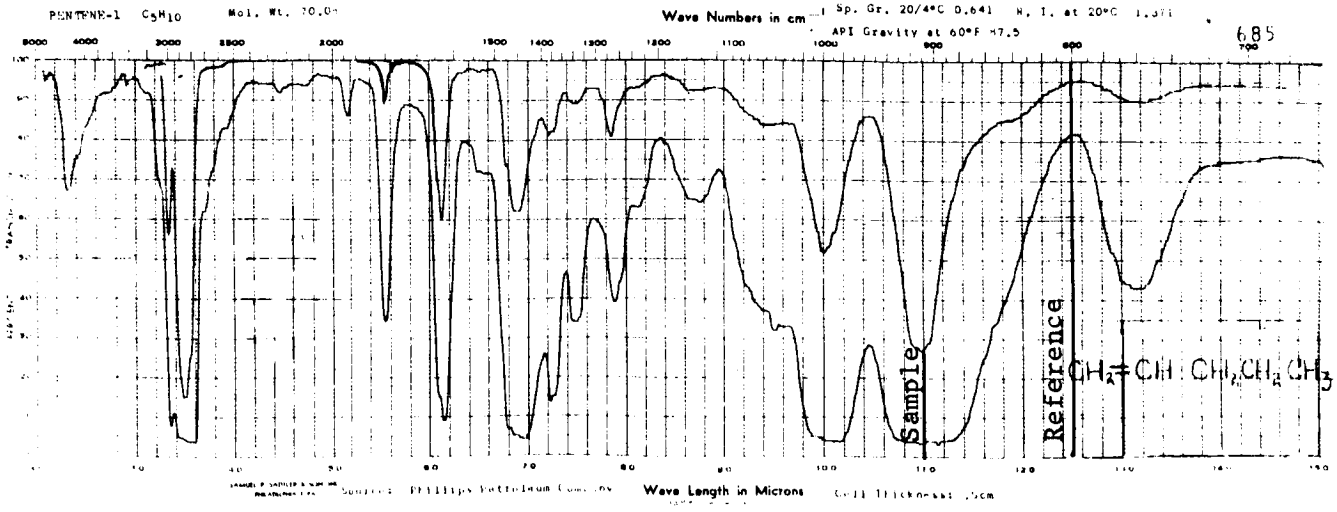

(c) Olefin

Fig. V-19 Infrared Absorption Characteristics

that the mercaptan sample and reference wavelength are in minimum and relatively flat absorption levels of other contaminants. Figure V-19c, top trace, is applicable. Figure V-20 shows the absorption spectrum of Shell 640 jet fuel, a refined kerosene, approximately the spectrum of the RP-1 base material. Figure V-20 also shows the sample and reference wavelengths of aromatics and olefins.

Aromatic Contaminant - Aromatics will exist 5% by volume maximum in the RP-1 fuel. Figure V-19b shows absorption spectra of benzene, which is a typical aromatic monitored in a cell thickness of approximately 0.015 mm. The sample wavelength was chosen at 5.1μ and the reference at 4.7μ, which is common to the RSH contaminant reference wavelength. The sample wavelength was chosen over 6.2μ due to the large amount (5%) of benzene present in solution and the large absorption at 6.2μ, which requires a 10-to-15μ sample cell that is difficult to realize and maintain in the field.

Olefins - Olefins will exist as contaminants 1% by volume maximum in the RP-1 rocket fuel. Figure V-19c shows the absorption spectrum of Pentene-1, which is a typical olefin. The sample wavelength is chosen at 11μ, which is the characteristic absorption line of the H_2 bond and the reference wavelength at 12.5μ, which is selected for minimum absorption.

Sulfur - Sulfur will exist in the RP-1 fuel 0.05% by weight maximum. Sulfur in solution can be made to react with inserted indicators monitored by photocells or may be made to react with an agent inserted into a sample tube or flow line that discolors the flow in a small cross section that is monitored. This instrument can also be made to operate dual beam for maximum sensitivity by monitoring a secondary equal-diameter adjacent tube without the coloring agent.

Sulfur not in solution will most likely be filtered out mechanically or chemically and monitored with an automatic fuel densitometer. Further development is required to define a sulfur particle detector.

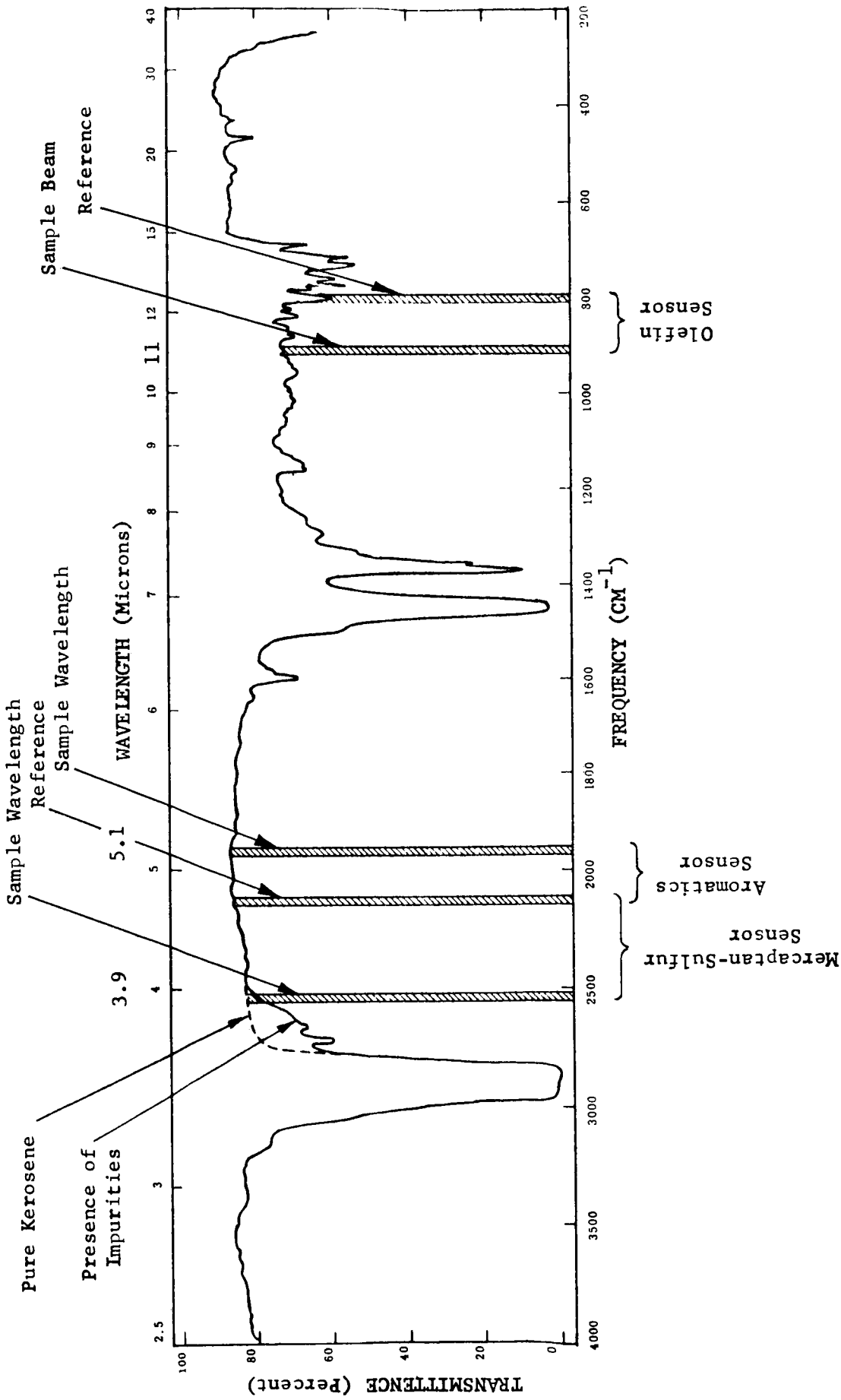

Fig. V-20 Infrared Absorption Spectrum of Shell 640 Jet Fuel

The spectral filter requirements of the above instruments are standard practice at Perkin-Elmer Corporation. Common filters are made to 2% total bandwidth (half-widths) up to 20μ.

The above instruments, with the exception of sulfur monitors, are readily defined and require development and study to optimize their performance by selection of wavelength, cell thickness, flow control, temperature control, filtering, and detector choice.

Areas of Required Development - The primary area requiring development effort is the gas chromatograph detector. As indicated previously, development work must be done on the detectors to obtain the required sensitivities in the particular carrier gases.

A second area worthy of development is the columns required by the gas chromatograph. Feasible columns are available for all of the determinations, but they must be optimized for the particular detectors to obtain minimum system response time.

Developments in the area of optical sensing devices pertain to RP-1 contaminant measurements and are mainly defined as equipment development. Basic sensors of required sensitivities, wavelength response, and energy sources for monitoring exist and are available for use in this program.

Wavelength filters of required passbands are developmental only to the extent of frequency positioning. These are fabricated as common items at Perkin-Elmer.

Investigations must be conducted for the various RP-1 contaminants and absorption spectra as a function of temperature, and the presence of other spectral absorbing contaminants.

Processes that will enhance absorption at one wavelength for a specific contaminant, while at the same time minimizing absorption of other contaminants will be investigated. Techniques for separating constituents for analysis to avoid errors due to other contaminants also will be investigated. Procedures for detection of sulfur that is not in solution are

considered a major area for development and analysis, since sulfur will not react readily unless it is in solution. Mechanical and chemical filters to be monitored by densitometers also will be studied.

With the exception of a sulfur-detection technique, the optical contaminant sensors for RP-1, for contaminants consisting of mercaptan-sulfur, aromatics, and olefins will require optimum system design and investigation of accuracy limitations, in contrast to technological breakthroughs.

The contaminant system will consist of sensing heads, base fluid and gas controls, signal processing electronics, contaminant unsafe level detectors, and indicating and readout equipment.

Contaminant instrumentation will sense contaminant levels and provide analog and digital tape readout of these levels as well as a binary (go/no-go) contaminant unsafe voltage level to be used for control or shutdown of fuel lines.

The sensing heads will contain the required detectors and preamplifiers to sense the contaminants and convert their indicated levels to appropriate voltages for cable transmission to the blockhouse, which will contain and shelter signal-processing electronics.

7) Melpar Corporation

The gas chromatography flame-ionization system proposed by Melpar is designed to monitor impurities in nitrogen, helium, oxygen, hydrogen, A-50, and MMH used in the preparation of space vehicles for flight. In brief, the suggested detection system consists of an on-site sensor to obtain an electrical signal for each contaminant and a master control system to unscramble the signals and present them as a direct indication of contaminant level on meters. The on-site sensors will use an injection valve, chromatographic column, and cross section ionization detector to determine specific trace contaminants, and a flame ionization detector to determine total hydrocarbons. The on-site sensors will be essentially identical, regardless of the compound to be tested, with the

exception of the partitioning columns. A molecular sieve column will be used for all gaseous compounds, while a Teflon-liquid phase column will be used for liquid fuels. The master control system will consist of a power supply, a timer to control the on-site sensor and unscramble the elution signals, and a separate readout meter for each contaminant of interest. The basic components used in all master control systems will be similar, but each unit will be tailored to the specific compound being analyzed.

Melpar believes that one basic type of gas chromatography unit can be used for all chromatographic applications. A multipurpose instrument of this nature possesses several advantages over an instrument specifically tailored to each compound. The prime advantage would be in the economies realized from a smaller spare parts and spare units inventory. Each chromatographic system will consist of an on-site sensor as well as a master control unit. The on-site sensor will consist of an injection valve, column, detector, and drift-stabilizing amplifier. The master control system will consist of a power supply, decoder, and readout meters. It is proposed that the on-site sensors be located at the sampling point. The sensors on the launch pad would be considered expendable. The master control system would be located at a safe distance from the launch pad. As previously mentioned, the on-site sensors would be essentially identical so they could be interchanged. The only difference would be in the partitioning columns. A molecular sieve column would be used for all the gaseous compounds (nitrogen, helium, and hydrogen). A liquid phase column would be used with the liquid compounds (A-50 and MMH).

The system described in the Melpar proposal does not need any concentration techniques to achieve adequate sensitivity. Melpar has also proposed that gas chromatography be used to monitor the bulk purity of each compound. It is not believed that any automatic gas chromatographic instrument can reliably maintain an accuracy of better than 0.1%. Since the minimum purity requirement for most of the gaseous compounds is 99.995%, this method of monitoring purity would be totally unsuitable. Therefore, gas chromatographic techniques should be used only for monitoring the contaminant levels, obtaining purity by the difference.

Gas Chromatography Components - The Melpar proposal states that one of the most important functions of the injection valve, especially in an automatic instrument, is the need to obtain clean, sharp elution peaks without disrupting the baseline. Melpar has designed a valve for this application.

All gas analysis and liquid analysis columns will be identical so a minimum of spare parts will be required. A molecular sieve column will be used for all the gas analyses. No difficulty in obtaining complete separation of hydrogen or helium, oxygen, and nitrogen within 30 sec is contemplated.

The liquid analysis columns will be prepared from Teflon particles coated with Carbowax 20M. Melpar claims that, with this type of column, the quantitative separation of hydrazines, water, etc can be easily accomplished within 30 seconds.

The cross section ionization detector has been found to be extremely rugged, reliable, and sensitive. When this detector is mated to an appropriate amplifier, sensitivities of less than 1 ppm can be achieved for practically any compound.

The flame-ionization detector is very suitable for the measurement of total hydrocarbons in gaseous compounds. Melpar claims that practically all commercially available hydrogen flame-ionization detectors are approximately equal in sensitivity and reliability. The baseline of all flame-ionization detectors does tend to change with the flame temperature and the purity of the gases used to maintain the flame. Consequently, the sensitivity and accuracy is somewhat impaired if this detector is used as a continuous hydrocarbon monitor. If this detector is used intermittently, however, no such problem can arise since a zero-stabilizing amplifier can then be used. It is proposed that total hydrocarbons be determined by using an injection valve to periodically insert a gas sample into the detector. The baseline will be maintained at zero with a zero-stabilizing amplifier, thus eliminating any extraneous detector effects. Total hydrocarbons will appear as a peak each time the injection valve is actuated. This peak will precede the elution peaks obtained from the cross section detector.

The bulk of the electronic components for this system will be housed in a separate control system located at a safe distance from the launch pad. All master control systems will use essentially the same components and circuits. The individual systems will be tailored to each fuel so correct readouts may be obtained for these fuels. The system will require a source of 115 v, 60 cps power. It is estimated that approximately 0.1 amp will be required. A solid-state highly regulated power supply will be used to power the electronic components. A 4-to-1 transformer will be used to power the injection valves. One cam of a four-cam timer will be used to actuate the injection valves for 1 sec at 30-sec intervals. The other three cams will be used to open a gate at specified periods of time after injection to include the elution peak from only one contaminant. A memory circuit is used to hold the maximum amplitude from this peak for 30 sec until a new indication is obtained. The individual indications are attenuated, and then recorded on separate meters. The amount of attenuation will be adjusted so each meter will operate in the appropriate concentration range and register the correct concentration.

The on-site sensors will be housed in an 8-cu-in. explosion-proof housing. Inlet and outlet connections will be supplied for the sample. Any sample flow between 5 ml/min and 5 liter/min. will be adequate for this instrument. Inlet connections also will be supplied for the carrier gas and flame support gases. Helium will be used as the carrier gas in all cases except where hydrogen is being analyzed. In this case, hydrogen will be used as the carrier gas. An approved electrical cable connector will be used to provide power, control signals, and transmit the output signals.

Each control system will be designed to fit in a standard 19-in. mounting rack and will be approximately 12 in. high. The individual control systems may be inserted into the same mounting rack, thus saving considerable space. Large meters will be provided to indicate the concentration of each contaminant of interest. Each meter will be color coded to indicate the acceptable limits and the dangerous

levels. A cable connector will be used to link the master control system with the on-site sensor. A recorder jack also will be provided on the front panel to check the performance of the system and make the initial adjustments.

Every component proposed in this system has been previously used in other Melpar-developed automatic monitoring systems. Nevertheless, a certain amount of engineering design work will be required to ensure a nicely packaged instrument that will operate reliably under all environmental conditions. This development work is reflected in the higher cost of the first units as compared to additional units. It is anticipated that units can be ready for installation at Cape Kennedy 6 months after a contract is awarded.

8) Beckman Instrument Co

Total-Hydrocarbon Analyzers - Beckman hydrocarbon analyzers are extremely sensitive instruments for detecting and measuring trace concentrations of hydrocarbons in vapors, or in the atmosphere. Based on the ionization of carbon atoms in a hydrogen flame, the analyzers are specific to carbon in the form of such hydrocarbons as alkanes, aldehydes, alcohols, acetates, amines, aromatics, ketones, and chlorinated hydrocarbons.

Model 109A is a semiportable bench instrument for laboratory or field use. Model 108A is designed for panel mounting as a continuously operating monitor. Model 106E is an explosion-proof instrument that permits the analysis section to be placed close to the sample point while the control section is panel mounted in a control room or other desired location.

All three Beckman total-hydrocarbon analyzers operate on the principle of hydrogen flame ionization of carbon atoms. A complex ionization occurs when samples containing carbon atoms are passed through a hydrogen flame. An electrometer circuit measures the resulting ion current existing in the flame between the burner jet and a collector suspended above it. The output of the electrometer provides the driving voltage for a meter or an optional potentiometric strip-chart recorder.

The magnitude of the electrometer's signal is a function of the number of carbon atoms passing through the flame at any given time. One result of this carbon-counting characteristic of the detector is that detector response is proportional both to the sample flow rate and the nature of the sample.

In many respects, Model 106E is similar to Models 108A and 109A. However, many additional design features make it particularly suitable for in-plant process applications.

The principal difference is that the two modules of Model 106E -- the flow control system including the burner in the analysis section, and the electronics and electrical control devices in the control section -- are housed in separate units. This permits the analysis module to be placed as close as possible to the sampling point while the control section can be located at a more convenient location, e.g., in a control room for readout purposes.

A second important difference is that Model 106E is designed as an explosion-proof instrument. It is recommended for use in hazardous areas where the danger of an explosion might be present or might develop. Both the analysis and control units of Model 106E are suitable where Class I, Group D, Division 1 electrical requirements must be met.

Specifications (Models 108A and 109A):

1) Sensitivity - 0 to 4 ppm carbon full scale, or better, on many applications. Sensitivity depends on sample concentration and other sampling conditions. Response is essentially linear even with changes in attenuation;

2) Range - ppm, as well as percentage concentrations, depending on analysis. Typically, 10 ppm methane, 3% methane;

3) Stability - Electronics are drift free;

4) Reproducibility - ±1.0% with successive identical samples;

5) Attenuation - 1, 3, 10, 30, 100, 300, 1000, and 3000;

6) Sample, fuel, and air requirements - Sample, 2 liters/min minimizes the response time of the sample handing system. An inlet pressure of 0.5 to 5 psig is sufficient for most applications. An internally mounted sample pump is standard in Model 109A and optional in Model 108A; air, 300 to 350 cc/min of clean, hydrocarbon-free air at 30 to 120 psig; fuel, 75 cc/min of premixed fuel (40% hydrogen and 60% nitrogen or other inert gas) at 30 to 120 psig or 35 cc/min of pure hydrogen, depending on the application;

7) Fuel consumption - Air, large 1A cylinder lasts 300 to 400 hr; premixed fuel, large 1A cylinder lasts 1500 hr;

8) Readout - Meter and 10-mv output for potentiometric recorder;

9) Response time - Instrument, less than 1 sec; instrument plus sampling system, typically 3 to 15 sec, depending on sampling arrangement;

10) Size, bench Model 109A - Height, front 9 in., rear, 8 in.; depth, 18 1/2 in.; width, 11 in.; panel Model 108A - Height, front 10 in.; depth, 16 1/2 in.; width, 12 3/4 in.;

11) Weight - bench Model 109A, approx 40 lb; panel model 108A, approx 35 lb;

12) Power requirements - 110 $\pm$ 15 v 60 cps (provision for 50-cps operation is available where required).

Specifications (Model 106E):

1) Sensitivity - 0 to 1 ppm full-scale methane with an attenuation of X1 and sample flow of 50 cc/min;

2) Range - ppm as well as percentage concentrations, depending on analysis. Typical, 10 ppm methane, 3% methane;

3) Stability - Electronics are drift free;

4) Repeatability - ±1% of full scale with successive samples;

5) Attenuation - 1, 10, 100, 1000;

6) Sample, fuel, and air requirements (tabulated);

	Pressure	Flow
Air	0 to 30 psig	0 to 400 cc/min
Fuel	0 to 30 psig	0 to 35 cc/min H_2
Sample	0 to 5 psig	0 to 50 cc/min N_2

7) Readout - Meter in control section plus provision for 5-mv potentiometric recorder;

8) Response time - Instrument, less than 1 sec; instrument plus sampling system, typically 3 to 15 sec depending on sampling arrangement;

9) Size - Control section, 10 1/2 in. wide by 10 in. high by 7 in. deep; analyzer section, 36 1/2 in. wide by 16 in. high by 12 1/2 in. deep;

10) Weight - Approx 175 lb;

11) Power - 115 v ± 10%, 60 cps, 500 w;

12) Electrical classification - Class 1, Group D, Division 1;

13) Location - The control section may be located up to 500 ft from the analyzer section.

Series D Process Gas Chromatograph Analyzer - The Series D analyzer consists of the chromatographic columns, detector system, sample valves, column control valves, temperature controller, and necessary supporting hardware housed in a thermostated enclosure suitable for installation adjacent to in-plant sampling points. The analyzer can be mounted up to 1,000 ft from the programer and recorder.

The standard detector is a four-element thermal conductivity cell. Under typical operating conditions, the detector can conservatively be expected to produce a full-scale recorder deflection in response to a 250-ppm concentration of the component of interest. Extremely stable voltage is supplied to the detector cell by a transistorized, dc power supply located in the programer.

The Series D analyzer is designed so sample conditioning modules can be integrated directly with it. This eliminates the need for steam tracing of sample lines between the analyzer and sampling system, ensuring better operation of the analyzer. Standard compatible sample conditioning modules are available for vaporizing, cooling, drying, cleaning, and pressurizing the sample before its introduction into the analyzer.

Two basic types of stainless steel sample valves are available for use with the Series D analyzer. Depending on the sample, the valve used may be either a small-volume liquid sample valve or a similarly constructed linear action gas sample valve.

The gas sample valve is a compound linear valve for injecting gaseous samples into the chromatographic column. The valve is air operated to control the flow path of sample and carrier gases.

The liquid sample valve is used to inject extremely small (from approx 0.5μ liter) liquid or gaseous samples into the chromatographic column. This valve permits the direct analysis of small liquid samples without first vaporizing them in a sample conditioning system. Use of small samples facilitates analyses of high-boiling-point liquids and speeds all types of analyses.

Specifications (Series D Analyzer):

1) Ambient temperature limits - -20 to +120°F;

2) Power requirements - 100 to 128 v, 50 to 60 cps, 10 amp, 1000 w max. at 115 v;

3) Air requirements - 2 1/2 to 4 scfm at 30 psig;

4) Carrier gas - 50 to 100 cc/min normal; varies with application;

5) Location - May be located as far as 1000 ft from programer;

6) Columns - Up to three columns arranged in any one of seven standard configurations;

7) Detector - Four-element hot-wire thermal conductivity;

8) Sensitivity - Varies with system; normal 150 to 250 ppm full scale with 1-cc gas sample;

9) Reproducibility - ±1/2% full scale;

10) Valves - Reproducibility, ±0.1%; temperature, 225°C max; air, 30 psig; sample and carrier gas, 250 psig max; liquid sample size, 0.70 to 0.60 μl; gas sample size, 0.70 to 60 μl with liquid valve, 0.5 to 5 ml with gas valve;

11) Sample flow - Liquid, approx 10 cc/min through analyzer (bypass as required); gas, approx 100 cc/min through analyzer (bypass as required);

12) Conduit connections - 1-in. NPT male;

13) Oven temperature response - Following is a tabulation of the time required to raise analyzer bath temperature (ΔT) to control temperature. Detector block temperature equilibration time will depend on the sensitivity of the system. At low sensitivity, analysis can start immediately; at top sensitivity, could take 30 to 45 min. Oven temperatures are changed without opening the oven door by the use of an external temperature control dial;

T in °C	Time/Min
50	10 1/2
100	21
175	44
200	53
215	60
Degree of Control Air - 50 to 60 ±0.02°C; 150 to 225 ±0.05°C.	

14) Weight - 200 lb net;

15) Safety characteristics - Meets Class 1, Group D, Division 1 requirements of National Electrical Code.

Electrolytic Hygrometer - The electrolytic hygrometer is an instrument designed to monitor the presence of moisture in process gas streams. The flow-regulated sample is passed through the electrolytic cell at a constant rate. Water vapor in the gas is absorbed by a thin film of phosphorous pentoxide supported by two rhodium electrodes. A direct current applied between the electrodes dissociates or electrolyzes the absorbed moisture into hydrogen and oxygen. The process of dissociation produces a current that is directly proportional to the concentration of water in the sample, following Faraday's law. This provides a linear signal for meter indication, which may also be used to drive a potentiometric recorder.

Standard Hygrometer - The 10-to-100-psig hygrometer can be supplied in a general-purpose, panel-mountable, or explosion-proof housing. The general-purpose and panel-mountable hygrometers are integral units containing flow control, sample bypass, analysis, amplification, and metering equipment. In the explosion-proof model, the analyzer and the electronic section are separate. Controls on the front panel of the general-purpose and panel-mountable process versions include a sensitive indicating meter, range selector switch, and the flow control valves and flowmeters for both the bypassed and analyzed sample streams.

With the explosion-proof model, the analysis and flow control assembly are housed in a Crouse-Hinds Condulet approved by the Underwriters' Laboratory for Class 1, Group D enclosures. The gasketed control unit, which may be mounted up to 2000 ft from the analysis unit, is designed for panel mounting. The case containing the meter may be air purged. To ensure the highest degree of accuracy, the analysis unit has been thermostated to eliminate any effect from ambient temperature shifts.

A standard feature of the explosion-proof model is an upper-limit alarm relay. A contact meter may be set in any position from 0 to 1000 ppm water. When the sample water content exceeds the set value, the contact meter trips an alarm relay that is capable of switching up to 5 amp of alternating current to any alarm system. This feature is available as an option on the general-purpose and panel-mountable instruments.

Low-Pressure Hygrometer - Available in general-purpose or panel-mountable housings, the low-pressure hygrometer (10-in. mercury vacuum to 10 psig) is similar to the standard instrument. An additional feature of the low-pressure instrument is a pressure gage to permit easy correction of flowmeter readings. A vacuum pump, preferably an oil-seal type capable of producing a vacuum of a minimum of 28 in. of mercury, must be used in conjunction with the hygrometer. This ensures a constant flow of gas through the electrolytic cell.

High-Pressure Hygrometer - The high-pressure hygrometer operates on ac or battery in the 10-to-6000-psig range and is manufactured in a general-purpose model. It differs from the standard and low-pressure versions by incorporating a differential pressure controller in the system. An alarm provision, consisting of a warning light and reset button, is an integral unit of the control panel. Its specifications are shown in the following tabulation.

	Standard	Low-Pressure	High-Pressure
Sample Pressure	10 to 100 psig	10 in. of mercury vacuum to 10 psig	10 to 6000 psig
Configuration	General-purpose, panel-mountable, explosion-proof, hygromite model	General-purpose, panel-mountable	General-purpose
Power	100 to 125 v 50 to 60 cps (Hygromite, ac and battery)	100 to 125 v 50 to 60 cps	100 to 125 v 50 to 60 cps 67.5 v battery
Ranges	0 to 10, 0 to 30, 0 to 100, 0 to 300, 0 to 1000 ppm (water vapor by volume)		
Sample Flow Rate	100 cc/min	100 cc/min	100 cc/min
Sample Handling Equipment	Copper, stainless steel (Hygromite model, copper only)	Copper	Copper
Accuracy	±5% of full scale	±5% of full scale	±5% of full scale
Sensitivity	Less than 1 ppm	Less than 1 ppm	Less than 1 ppm
Recorder Ranges	0 to 10 and 0 to 50 mv fixed (0 to 100 mv adjustable, Hygromite model only)	0 to 10 and 0 to 50 mv fixed	0 to 100 mv adjustable
Dimensions (in.)*	(1) 9.3x11.55x7.4 (2) 11.1x13.2x7.0 (3) 11.0x27.0x12.0 (4) 9.5x7.5x8.0 (5) 11.0x6.7x10.7	(1) 9.3x11.55x7.4 (2) 11.1x12.2x7.0	(1) 10.5x9.0x12.0
Weight (lb)*	(1) (2) 46 each (3) (4) 76 (combined) (5) 11	(1) (2) 46 each	(1) 26

*(1) general-purpose model; (2) panel-mountable model; (3) explosion-proof model (analysis unit); (4) explosion-proof model (control unit); (5) hygromite model.

Model 320 Programer - The standard Model 320 programer is designed to monitor one stream for up to four components. As many as 10 separate streams with similar compositions can be analyzed with the addition of the accessory Beckman automatic stream selector to program multipoint sampling. Functions performed by Model 320 include the timing and operation of column control valves, control of sample inject cycles, and periodic rebalancing of the analyzer's detector bridge circuit. In addition, the programer synchronizes recorder chart advance, programs individual peak height attenuations, and provides a precisely regulated voltage to the detector filaments located in the analyzer section of the chromatographic system. Its specifications are:

1) Analysis capability - Single stream four components with optional provision for additional components; more than one stream may be analyzed with use of two-, five- or ten-stream selectors;

2) Ambient temperature limits - +32 to 110°F;

3) Power requirements - 105 to 125 v, 50 to 60 cps, 250 w, including recorder;

4) DC power supply - Highly stabilized zener reference power supply, 14 to 25 v adjustable; detector voltage furnished regulated to better than 0.01% at constant temperature; maximum temperature coefficient better than 3 mv/°C;

5) Location - May be located as much as 1000 ft from analyzer;

6) Analysis time - 1/4 min to 2 hr;

7) Dimensions - 9.16 in. high, 16.83 in. wide, 17.62 in. deep; door size, 11.44 in. high, 19.25 in. wide, with swing of 180 deg;

8) Recommended panel cutout - 9.37 in. high, 17.25 in. wide;

9) Weight - 70 lb net;

10) Safety characteristics - Normally available as air purgeable unit; can be modified to conform with environmental free requirements.

Custom designed and fabricated apparatus is available to provide for special readout requirements, analysis of corrosive sample streams, resolution of complex samples, determination of trace concentrations, control applications, and packaged multiple instrument panels and systems.

Oxygen Analyzer - Models F3, G2, and 80 measure oxygen in ranges from ppm to 100%, in a variety of process applications.

Models F3 and G2 measure the unique paramagnetic properties of oxygen to provide automatic and continuous analysis of process gas streams. These oxygen analyzers use the physical paramagnetic measurement exclusively, offering advantages over combination measurements that include thermal conductivity, thermal convection, or chemical reaction measurements along with the paramagnetic. The paramagnetic measurement is specific and unaffected by background gases normally encountered; this offers greater sensitivity of measurement. Response time of paramagnetic measurements is faster than thermal conductivity measurements. The paramagnetic measurement is directly linear, requiring no additional components to give linear readout.

Model F3, a self-contained instrument complete with meter, is for wide ranges of analysis, usually from 0 to 1% on up. The instrument is manually standardized.

Model G2 is used in conjunction with a recorder modified for automatic standardization of the analyzer every hour to give highest accuracy for critical analyses. Model G2 is particularly suited for narrow-range analyses and for highly suppressed ranges.

Model 80 is for analysis of minute quantities of oxygen in ppm ranges. The instrument is particularly useful in monitoring inert gases in which oxygen content must be extremely low.

Oxygen exhibits a positive susceptibility in a magnetic field, much higher than other common gases, so the field of force tends to concentrate where oxygen is present.

Models F3 and G2 measure the total magnetic susceptibility of a sample, which is the summation of the susceptibilities of the individual gases in the sample. This total is almost entirely due to the oxygen, so the measurement is an accurate indication of oxygen content.

All measuring components of the Model F3 are contained in an aluminum housing of high thermal capacity. This unit is shock mounted within a second aluminum housing, sufficient to protect the magnetic suspension from abnormal shock or vibration. The entire assembly is then mounted in a vapor-tight steel case that is thermally insulated and thermostatically controlled so accuracy is independent of changes in ambient temperature. A built-in regulated power supply allows operation and accuracy to be independent of line voltage fluctuations of ±15%.

The standard Model F3 is a single unit, complete with a meter that allows reading of the analysis value at all times. If desired, the mv output from the Model F3 may be fed to a standard potentiometric recorder. If desired both pneumatic outputs and outputs for current measuring devices are available. Model F3 specifications are:

1) Power requirements - 115 v, 60 cps, 150 w; 50-cps instruments available;

2) Output - 5 mv full scale at 25-ohm impedance; other outputs also available on special order; pneumatic output is 3 to 15 psi; output for current measuring devices available;

3) Accuracy - ±1% of full scale for all ranges;

4) Ranges - Minimum range is 0 to 1%; maximum range is 0 to 100%; dual ranges are standard. Instruments with ranges of 0 to 5%, 0 to 10%, and 0 to 15% are supplied with a second range of 0 to 25%. Suppressed ranges also available;

5) Response - 90% response in 40 sec from time sample enters sample line at the instrument; special instrument with 90% in 10 sec available at extra cost;

6) Analysis cell - Standard unit is corrosion resistant for most gases; stainless steel cells available for special cases;

7) Sample requirements - Temperature, 50 to 100°F; recommended flow rate, 50 to 250 cc/min (3 to 15 cu in./min); sample pressure, 0 to 20 psi; pressure drop across analyzer should be less than 1 in. of water; analyzer outlet normally vents to atmosphere;

8) Operating temperatures - Case is thermostated at 130 ± 2°F; analysis cell operates at 142°F;

9) Warmup time - 24 hr before standardizing, or running gas through the instrument for 4 hr;

10) Ambient temperature range - +50 to 110°F;

11) Cases - Analyzer is steel, weight is 65 lb, flush- or surface-mounted. Explosion-proof analyzer also is available. Separate control box (when required) is steel, weight is 10 lb, flush- or surface-mounted;

12) Accessories - Recorders, automatic controls, alarms, complete sampling systems, panels, cubicles, supplied when desired at extra cost.

All measuring components of Model G2 are contained in an aluminum housing of high thermal capacity. The second component of Model G2, the recorder, is modified to give automatic standardization of the instrument. Electrical connections between the analyzer and recorder are made through a six-conductor cable of any desired length up to 1000 ft, permitting separation of components in those applications where it is desirable. Manual controls for adjusting the instrument zero and scale span are located on the recorders.

Model G2 has all the features of Model F3, plus the following characteristics:

1) Output - Analyzer and modified recorder act as an integral unit; a blind pneumatic transmitter that provides 3 to 15 psi output is available;

2) Recorder - Model G2 can be supplied with either circular or strip chart recorder or recorder-controller to match other recording instruments or provide the desired type of automatic control mechanism; unless otherwise specified, a circular-chart recorder will be supplied;

3) Accuracy - ±1% of full scale where widest range is 0 to 2% and wider; ±2% of full scale where widest range is 0 to 1% range; ±5% of full scale for 0 to 1000 ppm range;

4) Ranges - A few of the standard ranges are 0 to 1000 ppm, 0 to 0.5%, 0 to 1%, 19 to 21%, 90 to 100%, 95 to 100%. These are supplied with a second check range of five times the narrowest span;

5) Response - Initial response is immediate. A 90% response is obtained in less than one min. Instruments with 90% response in 40 sec are available for most ranges;

6) Cases - Analyzer case same as that of Model F3. Recorder is approximately the same size as the analyzer, depending on the type and manufacturer. Weight is about 65 lb;

7) Accessories - Automatic controls, alarms, complete sampling systems, panels, cubicles supplied when desired.

The Model 80 oxygen trace analyzer is a dual-range instrument that measures minute quantities of oxygen as low as 0 to 5 ppm. The instrument is particularly useful in monitoring inert gases in which oxygen content must be extremely low. Included is a panel for adjusting and metering gas flow through the instrument.

The oxygen trace analyzer is a galvanic cell consisting of two electrodes partially immersed in an alkaline electrolyte. The anode is made of lead and the cathode of silver. The electrodes are mounted concentrically

on a cylindrical plastic core with only the cathode exposed to the sample gas. A porous element separating the electrodes dips into a pool of electrolyte and is kept saturated by slow circulation of the electrolyte.

In the presence of oxygen, an electrochemical reaction at the interface of the cathode and electrolyte converts the oxygen to hydroxyl ions. This reaction results in the flow of electrical current, which causes the lead anode to dissolve and form plumbite ions. The net result of the reaction is the consumption of oxygen and dissolution of the lead electrode. This current is limited almost entirely by the oxygen content of the gas, and the current generated is proportional to the partial pressure of oxygen in the gas surrounding the electrodes. In the absence of oxygen no reactions take place within the cell and no current flows. The Model 80 specifications are:

1) Ranges - Minimum standard range is 0 to 5 ppm, maximum standard range is 0 to 500 ppm. The maximum ratio of the two ranges on the dual-range instrument is 5 to 1. Typical ranges (in ppm) are 0 to 5, 0 to 25, 0 to 50, and 0 to 250 ppm and 0 to 100 and 0-500. Ranges less than 5 and greater than 500 may be supplied. For ranges greater than 0 to 1000, the Model G2 oxygen analyzer is recommended.

2) Accuracy - ±5% of reading for calibration every 24 hr;

3) Response - Initial response within about 30 sec after the sample enters the analyzer case. 63% response is attained in 1 more min, and 95% response in about 2 min;

4) Recorder - Any potentiometric type of recorder may be used. In some cases a current output can be supplied on request;

5) Output - Standard output is 0 to 5 mv;

6) Cases - Analyzer in steel case. Dimensions are 18 1/2 in. high, 16 in. wide, and 11 in. deep;

7) Weight - Approx 65 lb (explosion-resistant case also available);

8) Ambient temperature range - 50 to 110°F;

9) Sample requirements - Recommended flow rate is 100 cc/min (0.02 cf/hr). Since the cell consumes oxygen, the analysis reading will drop to zero as the sample flow rate drops to zero. 100 ± 10 cc/min holds the reading within the stated accuracy. A constant positive pressure of 2 to 30 psig is required. The sample system must be vacuum tight because leakage of atmospheric oxygen into lines at positive pressure may be great enough to cause errors. The instrument is normally vented to atmosphere since the output is directly proportional to the pressure in the analysis cell. The analyzer sample vent must discharge into a water knockout pot or equivalent because the gas is saturated with water at about 100° F as it leaves the instrument.

10) Sampling systems - Complete single or multiple sample systems are available;

11) Power requirements - 115 v, 60 cps, 200 w; 50-cps instruments available;

12) Optional equipment - Controls, alarms, sampling systems, panels, cubicles.

Continuous Infrared Analyzers - Beckman infrared analyzers comprise two basic sections.

The analyzer section contains two infrared energy sources, a filter cell (if required) to reduce interference from other infrared-absorbing components, a 10-cps optical chopper, and sample and reference cells. The detector is a pneumatic microphone type with an RF oscillator.

The amplifier control section contains the amplifier and operating controls including an indicating meter and power and function switches and provides a recorder output signal.

Beckman infrared analyzers are supplied in three basic models. Model IR-215 combines both the analyzer section and the amplifier control section in a compact, single-unit instrument.

Model IR-315 consists of two units, one containing the analyzer section and the other the amplifier control section. This model is primarily designed for use in process plant operations. Both units are designed for panel mounting. The amplifier control section can be mounted remotely from the analyzer section. Another version of this model, IR-315L, features a long optical path length sample cell that provides greater sensitivity for monitoring trace components.

Model IR-415 is identical to the IR-315 except that its analyzer section has been designed as an explosion-proof unit. It is intended for use in applications where the explosion-proof feature is required due to hazardous atmospheric environments.

A companion version, the IR-415L, is identical to the IR-315L except that its analyzer section has also been designed as an explosion-proof unit.

Both the reference cell and the sample cell are filled initially with a nonabsorbing gas. The sample stream is then introduced into the sample cell.

Infrared radiation, passing through the sample cell, is absorbed by the component of interest only in the regions where that component has infrared absorption bands. The percentage of radiation absorbed is proportional to the concentration of the component of interest in the sample.

Due to the difference in gases now in the two cells, the amount of energy entering the detector from the reference cell is greater than the amount of energy entering the sample side of the detector.

The detector is a closed container consisting of two sealed compartments of equal volume, separated by a flexible metal diaphragm. Both compartments are filled with the gas or vapor of the component of interest.

The infrared radiation that passes through the reference cell enters one compartment of the detector, while the radiation passing through the sample cell enters the other compartment. The gas in each compartment of the detector is heated by the incoming energy.

Heating the gas in the detector causes the pressure in the two compartments to rise. The pressure rise is greater in the compartment receiving the radiation from the reference cell since a portion of the radiation transmitted through the sample cell has been absorbed by the component of interest before entering the other compartment.

Due to the unequal pressure, the diaphragm expands into the sample side of the detector, the amount of expansion being proportional to the difference in pressure between the two compartments.

Between the dual infrared radiation sources and the reference and sample cells is an optical chopper that chops the two beams of radiation at 10 cps. When the chopper blocks the two beams, the pressure in the two compartments is equalized and the diaphragm returns to a normal position. Each time the beam hits the detector the pressure is again unequal, and the diaphragm expands into the compartment of the lesser pressure.

The back and forth movement of the diaphragm as the beams of energy are chopped causes a change in electrical capacitance. This capacitance change modulates an RF signal from an oscillator, and the signal is subsequently demodulated and transmitted to the amplifier section where it is amplified, indicated on a meter, and then used to drive a recorder.

Specifications of the infrared analyzer are:

1) Basic measurements - Highly selective single component in gas or liquid;

2) Sensitivity - 0.5% of full scale;

3) Range - From ppm to 100% concentration depending on the specific application;

4) Maximum zero drift - ±1% of full scale each 8 hr;

5) Maximum span drift - ±1% of full scale each 24 hr;

6) Speed of response - Electronic, 0.5 sec for 90% of full scale; sample flushing, depends on volume of cell;

7) Accuracy - Normally ±1% full scale;

8) Output - Current, 0.5 milliamp into 500 ohms maximum; voltage, adjustable to match any potentiometric recorder having spans of 1 thru 100 mv;

9) Ambient temperature range - Model 215, 60 to 105°F; Models 315 and 415, -20 to 120°F.

10) Sample path length - Standard sample cell up to 12 1/2-in. max; optional long path sample cell, 35-in., available for Models 315 and 415, which gives greater sensitivity in low concentration applications;

11) Electrical - Amplifier section of Models 315 and 415 is capable of being purged with an inert gas. The Model 315 analyzer section is also supplied with fittings for inert gas purging where an explosion-proof instrument is not required. Model 415 analyzer section supplied in a Condulet designed to meet Class 1, Division 1, Group D requirements. Model 215 is supplied with an integral constant voltage transformer. On Models 315 and 415 this transformer is supplied separately with 10 feet of interconnecting cable;

12) Power - Model 215, 115 v, 50 or 60 cps, max 190 w; Models 315 and 415, 115 v, 50 or 60 cps, max 530 w (max 640 w with long path sample cell);

13) Weight (as tabulated) -

	Net (lb)
Model 215	65
Model 315	85
Model 415	110
Model 315L (Long Path)	120
Model 415L (Long Path)	106

14) Cables - Order interconnecting cable No. 96335 for connecting amplifier and analyzer sections of Models 315, 415, 315L and 415L only;

15) Accessories - Manual standardization equipment, sample line filters, sample handling systems, sealed sources, and components;

16) Mounting kits (for other than panel mounting) - For Models 315 and 415, kit No. 70999 allows field mounting amplifier section anywhere; kit No. 135440 allows field mounting analyzer section anywhere (Model 315 only).

Beckman Recommendations - For each analysis requirement, Beckman has indicated the various components that can be measured, the type of instrument to be used, and full-scale sensitivity that may be expected. These are shown in the following tabulation. Appropriate sample handling equipment is available to properly condition (e.g., vaporize, filter, and pressure control) the sample for compatibility with the listed instruments.

Nitrogen, Ref MSFC-SPEC-234	
Component	Technique
N_2	Purity cannot be measured directly with accuracy, but must be determined by measurement of total impurities.
Total Impurities	Due to the wide variety of components, several instruments are required for this measurement.
O_2	A Model 80 oxygen analyzer may be used to monitor oxygen over a full-scale range of 0 to 50 ppm.
Total Hydrocarbons	Total hydrocarbons may be monitored over a full-scale range of 0 to 4 ppm (as methane) or greater by means of Models 108 or 109 total-hydrocarbon analyzer.
Moisture	May be monitored by an electrolytic hygrometer over a selected full-scale range as low as 0 to 10 ppm, or as high as 0 to 1000 ppm.
If other such impurities as Ar, H_2, CO, CO_2, and CH_4 are present, they may be monitored by gas chromatograph.	

Helium, Ref MSFC-SPEC-364A	
Component	Technique
Helium	Purity cannot be measured directly, but must be determined by measurement of total impurities.
Total Impurities	Due to the wide variety of gases involved, several instruments are required for this measurement.
H_2	A full scale range of 0 to 25 ppm is achievable by a Model 320-D process gas chromatograph with argon carrier gas.
N_2, O_2 + Ar, Ne, Kr, CO_2	These components may be summed and presented as a single measurement over a full-scale range of 0 to 50 ppm. Measurement is achievable by a Model 320-D process gas chromatograph. A Model 80 oxygen analyzer may be used to monitor O_2 only over a full-scale range of 0 to 5 ppm.
Total Hydrocarbons	Total hydrocarbons may be monitored over a full-scale range of 0 to 4 ppm (as methane) or greater by the Model 108 or 109 total-hydrocarbon analyzer.
Moisture	May be monitored by means of an electrolytic hygrometer over a full-scale range of 0 to 10 ppm or greater.

Type I and Type II Oxygen, Ref MSFC-SPEC-399	
Component	Technique
O_2	A Model G-2 paramagnetic oxygen analyzer may be employed to monitor oxygen purity over a full scale range of 99-100%.
Specific Hydrocarbons	A Model 320-D Process Gas Chromatograph with hydrogen flame ionization detector can provide on-stream analysis of the following hydrocarbons with full scale ranges as indicated. Methane 0-25 ppm Ethane 0-2 ppm Propane 0-1 ppm Acetylene 0-1 ppm C_4 + 0-2 ppm
Total Hydrocarbons	A Model 108 or 109 total-hydrocarbon analyzer will provide analysis of total hydrocarbons over a full scale range of 0 - 4 ppm (as methane) or greater as required.
Moisture	Moisture may be monitored by an electrolytic hygrometer over a full scale range of 0 to 10 ppm or greater.
Selected Gaseous Impurities	A nondispersive infrared analyzer may be used to provide analysis of the following components over indicated full scale ranges. CO 0-20 ppm CO_2 0-5 ppm N_2O 0-20 ppm $CO+CO_2$ 0-50 ppm As an alternative to nondispersive infrared analysis, a single Model 320-D process gas chromatograph may be considered for monitoring the following components over the indicated full scale ranges. CO 0-50 ppm CO_2 0-50 ppm N_2 0-50 ppm

Liquid and Gaseous Hydrogen, Ref: MSFC-SPEC-356	
Component	Technique
Total Hydrocarbons	Total Hydrocarbons may be monitored over a full scale range of 0 - 4 ppm (as methane) or greater by means of the Model 108 or 109 Total-Hydrocarbon Analyzer.
Moisture	May be monitored by an Electrolytic Hygrometer over a selected full scale range as low as 0 - 10 ppm or as high as 0 - 1000 ppm
N_2 and O_2 + Ar	A full scale range of 0 - 50 ppm is achievable for the N_2 and combined O_2 + Ar measurements by means of a 320-D Process Gas Chromatograph with helium carrier gas.
Helium	A full scale range of 0-50 ppm is achievable by means of a 320-D Process Gas Chromatograph with argon carrier gas.
Aerozine 50, Ref: MIL-P-27402 (USAF)	
An on-stream 320-D process gas chromatograph may be employed to analyze the following components. In addition, the amines may possibly be measured, depending on the type and concentration.	
Hydrazine	0-60%
UDMH	0-50%
Water	0-2%
MMH, Ref MIL-P-27404	
An on-stream 320-D process gas chromatograph may be employed to analyze the following components. In addition, the other impurities may possibly be measured, depending on the type and concentration.	
MMH	0-100%
Water	0-2%

N_2O_4, Ref: MIL-P-26539A
Beckman cannot offer at this time a guaranteed method of analysis. They believe, however, that on-stream chromatography can be employed for the H_2O and NOCℓ measurements. Some development work would be required before offering a guaranteed system.
RP-1, Ref MSFC-SPEC-342
Nondispersive Infrared Analyzers are available for mercaptan and aromatic analysis. On-stream chromatography can conceivably be used for olefins and aromatics measurements. Some development work will be required prior to offering a guaranteed system.

9) Millipore Filter Corporation

Micro-Scan is an instrument that continuously monitors particulate matter and entrained water in fuels. All elements of the instrument are contained in a single explosion-proof enclosure that can be installed by two fluid connections.

The enclosure is made up of two aluminum castings and a machined aluminum plate as a cover. It has been designed to withstand a hydrostatic pressure of 560 psi, in accordance with the requirements of the Underwriters Laboratories for Class 1, Group D hazardous locations.

The instrument has been designed with replaceable plug-in components to eliminate the need for field maintenance. Once calibrated and installed, the Micro-Scan requires no further adjustments. The specifications of the instrument are tabulated below.

Overall Dimensions (in.)	14 3/4x14 3/8x9
Approximate Weight (lb)	85
Structural Material	Cast Aluminum (356-T6)
Inlet and Outlet Connectors	1/2 in. NPT female
Electrical Inlet	3/4 in. NPT female
Sampling Flow Rate (gpm)	1.3

Maximum Operating Pressure *(psi)	200
Operating Voltage (vdc)	12
Operating Current (amp)	0.6
Temperature Range† (°C)	-20 to +50
Sensitivity by weight‡	
Solids (mg/gal.)	0.1
Entrained water (ppm)	0.01
Sensitivity by particle size‡ (μ)	5

*If system pressure exceeds 200 psi, a pressure-reducing valve should be used.

†Represents ambient temperature range over which tests were performed.

‡Represents setting for Model XM01 000 00 (can be increased or decreased).

When a particle in a fuel stream passes between two capacitor plates in the Micro-Scan sensor, the capacitance changes by an increment proportional to the particle volume. This capacitance change is translated into a voltage pulse of fixed duration and height. The resultant pulse train is processed through a series of amplifiers to yield a measure of the contamination level.

The instrument is sensitive to both particulate contamination (dirt) and entrained water in fuels. It is not affected by, or sensitive to, air bubbles. While the instrument is not presently designed to distinguish between dirt and water, it activates an alarm if either is present in excess of predetermined acceptable levels, since each constitutes an operational hazard in fuel.

Because the Micro-Scan does not distinguish between particles and undissolved water, it is doubtful that this instrument can be used in the overall instrumentation system.

10) Mine Safety Appliances Co.

Mine Safety Appliances Company proposed the following instrumentation.

Nitrogen, Ref MSFC-SPEC-234 - Nitrogen can be analyzed as follows:

1) Oxygen in the range of 0 to 50 ppm can be monitored by an oxygen analyzer of the fritted silver electrode-KOH type;

2) Total hydrocarbons (as methane) can be monitored by nondispersive infrared analyzers with 40-in. cell lengths. This would provide a full-scale range of 20 ppm and thus give a very readable, on-scale deflection for the contemplated maximum of 5 ppm;

3) Moisture content can be monitored by an electrolytic hygrometer;

4) Nondispersive infrared analyzers with 40-in. sample cells can also be used for moisture. These instruments would have a maximum sensitivity of approximately 300 ppm full scale;

5) It is questionable whether purity in the range of 99.99% can be adequately monitored by gas chromatography. Instruments of this type are reproducible to about 1% of full scale; therefore, it would not be practical to analyze nitrogen over the range of 0 to 100%. Suppressed ranges of 99 to 100% would be difficult to achieve and probably would not result in adequate repeatability and reliability.

Helium, Ref MSFC-SPEC-364A - Helium can be analyzed as follows:

1) Overall helium purity measurements do not appear to be practical with gas chromatography for the same reasons given for nitrogen;

2) N_2 and H_2 can be monitored by a gas chromatograph;

3) Moisture can be monitored by an electrolytic hygrometer or a nondispersive infrared analyzer with a 40-in. cell length;

4) Hydrocarbons can be monitored by a flame-ionization type hydrocarbon analyzer or a nondispersive infrared analyzer with a 40-in. cell length;

5) Oxygen can be monitored by an oxygen analyzer of the fritted silver electrode-KOH type.

Type I (Gaseous Oxygen) and Type II (Liquid Oxygen), Ref MSFC-SPEC-399 - Oxygen can be analyzed as follows:

1) Purity can be monitored by a paramagnetic oxygen analyzer;

2) Moisture content in the range of 0 to 300 ppm can be accomplished with a nondispersive infrared analyzer, or an electrolytic hygrometer;

3) Alkyne and acetylene can be analyzed in the 0-to-10 ppm range using nondispersive infrared analyzers;

4) Where required, nitrous oxide and halogenated hydrocarbons can be analyzed by the MSA Billion-Aire;

5) Where required, CO and CO_2 can be monitored with nondispersive infrared analyzers.

6) Total hydrocarbons could be measured with nondispersive infrared analyzers with a 40-in. cell length.

Liquid and Gaseous Hydrogen, Ref MSFC-SPEC-356 - Hydrogen can be monitored as follows:

1) It is not feasible to monitor hydrogen for purity;

2) O_2, Ar, helium and carbon-bearing gases can be monitored by gas chromatographs;

3) Moisture can be monitored by an electrolytic hygrometer or a nondispersive infrared analyzer;

4) Oxygen can be monitored by an oxygen analyzer of the fritted silver electrode-KOH type.

Aerozine-50, Ref MIL-P-27402 (USAF) - The analysis of hydrazine, UDMH, amines, and moisture can probably best be performed with gas chromatography.

MMH, Ref MIL-P-27404 - MMH purity and water content can probably best be monitored through gas chromatography.

N_2O_4, Ref MIL-P-26539A - Mine Safety Appliances knows of no continuous analysis techniques to analyze the listed impurities.

RP-1, Ref MSFC-SPEC-342 - RP-1 can be analyzed as follows:

1) Moisture can be monitored by the Millipore Micro-Scan;

2) Mercaptans, olefins, and aromatics can be monitored by nondispersive infrared analyzers;

3) No method exists for monitoring existing or potential gums or sulfur content.

In the study of this overall problem MSA did not consider the sampling requirements.

It does not appear likely that any single sensor could be developed to handle all necessary analytical measurements.

It would seem possible and practical to apply the technique of open-path infrared to process stream monitoring. MSA can visualize the possibility of mounting an infrared light source and detector in one wall of a duct or pipe. The path length could be altered through installation of reflective surfaces or other techniques. They also visualize the possibility of mounting a number of selective infrared detectors on a turret head configuration that could

be programed to rotate selective infrared detectors into the infrared light path, and, in this manner, one instrument configuration could be used to cyclically read out any organic compound, or compound that exhibits infrared absorption characteristics. An instrument of this type could be partcularly useful on gaseous streams, but it would also appear possible to adapt this principle to certain liquid streams. An instrument of this type is completely feasible but would require developmental effort.

These instruments, as well as any instruments currently available for this general kind of service, are of the type that withdraws the sample from the process stream and circulates it through the instrument. Fundamentally the sensors are not separated from the electronics although remote readout and control devices are compatible with them. A review outlined in NASA specification SP-80-D dealing with environmental conditions at the instrument or sensor location leads MSA to believe that instruments currently available for industrial in-plant application could probably meet all requirements through redesign and repackaging. Instruments of this type are already in use in areas of high shock and vibration levels and are able to withstand such environments without failure. Existing instruments would probably meet the intent of specifications covering environmental conditions.

The following instrument manufacturers also cooperated in the survey. Their instruments are not recommended because the particular capabilities of these instruments are not compatible with the final design philosophy adopted for the instrumentation systems.

1) Baird Atomic Corp, Cambridge, Massachusetts;

2) Block Engineering, Inc, Cambridge, Massachusetts;

3) Jarrell-Ash Co, Waltham, Massachusetts;

4) Warner-Chilcott Laboratories, Instrument Div, Morris Plains, New Jersey;

5) Loenco, Inc, Altadena, California;

6) Cahn Instrument Co, Paramount, California;

7) Hallikainen Instruments, Inc, Richmond, California;

8) G. K. Turner Associates, Palo Alto, California;

9) Gaertner Scientific Corp, Chicago, Illinois;

10) E. H. Sargent and Company, Chicago, Illinois;

11) Bausch and Lomb, Inc, Rochester, New York;

12) Barnes Engineering, Inc, Stamford, Connecticut;

13) Air Products and Chemicals, Inc, Allentown, Pennsylvania;

14) Fisher Scientific Co, Pittsburgh, Pennsylvania;

15) American Instruments, Inc, Silver Spring, Maryland.

c. General Design Criteria and Equipment Recommendations

1) Design Criteria

The purity/impurity requirements for the fluids of interest are given in the MSFC specifications for all fluid except Aerozine-50, MMH, and N_2O_4, which are given in military specifications. The requirements are shown in Table III-1.

The primary design criteria for a contamination sensor to be placed in given fluid system are that the sensor be capable of detecting and quantifying all parameters defined by the applicable specification and, in doing so, demonstrate accuracy and repeatability. The sensor must perform its operation of detection and quantification on a continuous basis and response should be as rapid as possible.

Portability is desirable; however, it is not a firm requirement. If the instrumentation is installed permanently, it must be capable of withstanding the environment existing during launch. In addition, the instrument must be explosion proof if it is to be used in an area where flammable vapors might exist. The instrument must be of minimum size and weight consistent with all the other requirements stated.

Obviously the only criterion firmly defined above is that of detecting and quantifying the purity/impurity parameters specified in the applicable specification. Based on information supplied from the instrumentation manufacturers, no single instrument is available that can measure all these parameters. However, there are instruments that can measure a number of them. These instruments can be grouped into two separate types of systems, each capable of nearly fulfilling the study objective. One system uses mass spectrometers in conjunction with hydrocarbon analyzers, moisture monitors, and ppm oxygen analyzers for the analysis of the contaminants in the Category I fluids. The other system substitutes process stream gas chromatographs for the mass spectrometer to provide the same analyses. Both systems would use process gas chromatographs for the analysis of the Category II fluids if these parameters are monitored.

Both systems are capable of analyzing impurities to levels prescribed in the applicable specifications of Table III-1. However, the mass spectrometer is not capable of providing the analysis required for acetylene content (0.25 ppm) in oxygen. It also does not accurately provide the analysis required for the combined oxygen and argon content in hydrogen and helium (1.0 ppm) or the analysis required for hydrogen content in helium (1.0 ppm). The sensitivity of the mass spectrometer given for those analyses is 1 ± 1/2 ppm. This number indicates an error of ± 50% at 1 ppm.

The manufacturers claim that the gas chromatograph is capable of making all the desired resolutions including the low ppm resolutions. However, it still is doubtful that any instrument can come any closer to these limits than the mass spectrometer. The moisture monitor, the ppm oxygen analyzer, and the hydrocarbon analyzer are capable of providing continuous monitoring at the desired levels of sensitivity. Therefore, these instruments shall be used in most cases where these analyses are required. The mass spectrometer is not capable of continuous readout, but it is capable of performing specific analysis for individual contaminants in approximately 1 sec. The gas chromatographs take 15 sec to 7 min to provide the same analysis. A 5-to-7-min time span for analysis is the best that can be obtained by commercially available equipment. With considerable development of such new GC techniques as capillary column chromatography, the 5-to-7-min time span can be cut to as low as 15 sec, although, 2 min appears more likely of attainment. Because of the extensive development requirement, it is impossible to establish a firm design criteria for time of analysis.

Size and weight of the moisture monitor, hydrocarbon analyzer, and the oxygen analyzer are well defined for the laboratory instruments. These are small, lightweight, portable instruments. The requirement for explosion and shock proofing these instruments will substantially increase their weight and size. This value cannot be defined for instruments other than Beckman's. The size and weight of the gas chromatographs are generally undefined because these

parameters are a function of the technique used, e.g., a capillary-type chromatograph would weigh less than the conventional type. Bendix did provide drawings for some of their basic instruments but these are subject to change. Perkin-Elmer could not give dimensions or weights for their product. CEC said their basic instrument would weigh about 800 lb, but, with developmental effort, it could be trimmed down to about 300 lb.

Although weight and size considerations are of paramount importance to this phase of the study, these considerations should be made only after the exact locations of the monitoring points are firmly established. Therefore, because of the undefined size and weight, no firm design criteria for these parameters or for portability requirements will be specified at this time.

No specific requirements for response time, accuracy, or repeatability will be given at this time for the gas chromatograph or the mass spectrometer because these parameters are also a function of developmental effort. Response times, accuracy, and repeatability for the total-hydrocarbon analyzer, the electrolytic hygrometer, and the infrared, ultraviolet, and oxygen analyzers are well defined.

2) Equipment Recommendations

Based on the previous discussion, the following techniques shall be employed for monitoring the specific contaminants in each fluid of interest. Note that in some cases an alternative method is indicated. This has been done because it may not be possible to use the primary instrument due to some unforeseen reason. In each case, the primary instrument is listed first.

It is not important that each contaminant be measured in each fluid. It is more important that the more significant contaminants (those that present a significant danger to the system or to the vehicle's mission) be monitored.

Gaseous Nitrogen (Converter-Compressor and Pad Storage Areas) Ref MSFC-SPEC-234:

1) Purity will be monitored by instrumental determination of impurities and the automatic subtraction of these from the total;

2) Hydrocarbons will be monitored by a flame-ionization total-hydrocarbon analyzer;

3) Moisture will be monitored by an electrolytic hygrometer that indicates hydrolysis of absorbed water in hygroscopic plates;

4) Trace O_2 will be monitored by a ppm oxygen analyzer, the style that has lead and fritted silver electrodes immersed in a KOH bath.

Gaseous Nitrogen (ML or AGCS Area) Ref MSFC-SPEC-234:

1) Purity will be monitored by instrumental determination of impurities and the automatic subtraction of these from the total;

2) Hydrocarbons will be monitored by a flame-ionization total-hydrocarbon analyzer;

3) Moisture and trace O_2 will be monitored by a mass spectrographic analyzer;

4) Alternatives - An electrolytic hygrometer for moisture content and a ppm O_2 analyzer for oxygen content can be used.

Helium (ML or AGCS, Converter-Compressor, Pad Areas) Ref MSFC-SPEC-364A:

1) Purity will be monitored by instrumental determination of impurities and the automatic subtraction of these from the total;

2) N_2, H_2, O_2, and moisture will be monitored by a mass spectrographic analyzer;

3) Alternatives - N_2 and H_2 can be monitored by a process stream gas chromatograph; O_2 can be monitored by a ppm oxygen analyzer; moisture can be monitored by an electrolytic hygrometer;

4) Hydrocarbons will be monitored by a flame-ionization total-hydrocarbon analyzer.

Gaseous Oxygen, Ref MSFC-SPEC-399 (Grade C):

1) Purity will be monitored by the paramagnetic oxygen analyzer;

2) Moisture will be monitored by an electrolytic hygrometer;

3) Total hydrocarbons will be monitored by a flame-ionization total-hydrocarbon analyzer;

4) Acetylene content will be determined by nondispersive infrared spectroscopy. (It is not necessary to monitor for acetylene content in gaseous oxygen when total hydrocarbons are monitored. Acetylene is always monitored in LO_2, even though LO_2 is analyzed in the vapor phase.)

Gaseous Hydrogen (ML or AGCS and Pad Storage Areas) Ref MSFC-SPEC-356:

1) Purity will be monitored by instrumental determination of impurities and the automatic subtraction of these from the total;

2) O_2, Ar, helium, carbon bearing gases, and moisture will be monitored by a mass spectrographic analyzer;

3) Alternative - These commodities can be measured by a process stream gas chromatograph;

4) Total hydrocarbons will be monitored by a flame-ionization total-hydrocarbon analyzer.

Liquid Nitrogen (Ref MSFC-SPEC-234) and Propellant Grade Oxygen (Ref MSFC-SPEC-399, Grade C):

No monitoring devices are capable of measuring contamination directly in cryogenic fluids. There is very little hope that such a device will be or can be developed in the future. However, for LN_2 and LO_2 of propellant grade, a continuous cryogenic sampler that uses a continuous flash vaporizer can be used in conjunction with the instrumentation proposed for the gaseous phase of these commodities to perform the required analysis. These cryogenic samplers are commercially available in several forms.

It is not considered necessary that LN_2 be monitored as it flows from the storage dewars to the converter-compressor facility, because N_2 is not used as a liquid. LN_2 is a source of GN_2, and is monitored as such after vaporization. However, a sampling point to check the condition of LN_2 in the dewars during storage is recommended. This sampling point is located in a recirculation loop that provides agitation of the tank contents during sample taking.

Liquid Hydrogen (Ref MSFC-SPEC-356 - For LH_2, a continuous cryogenic sampler, in conjunction with the instrumentation proposed to monitor GH_2, will be sufficient to analyze all contaminants. The para-ortho ratio need not be measured because it is not necessary. The hydrogen is manufactured at a ratio of 95% para to 5% ortho. This is the minimum requirement set by MSFC-SPEC-356. The balance cannot possibly shift to a lower para-ortho ratio because of thermodynamic considerations. Therefore, the minimum is achieved and the ratio can only shift upwards as the remaining ortho hydrogen converts to a para configuration.

A-50 (Ref MIL-P-27402, USAF) - The N_2H_4, UDMH, amine, and moisture content of A-50 can be monitored by a process stream gas chromatograph. However, it is not really necessary to monitor A-50 on a continuous basis because the quantities used are not large, loading time is short enough that monitoring by the gas chromatograph technique appears to be impractical, and the present method of mechanical sampling is accurate and reliable enough to ensure that good quality propellant is loaded.

MMH (Ref MIL-P-27404) - Purity and moisture content can be monitored by a process stream gas chromatograph. However, the reasons for not monitoring A-50 apply to MMH.

N_2O_4 (Ref MIL-P-26539A) - There is no known way of measuring purity or contamination content by instrumental methods. Some manufacturers have proposed the use of a process stream gas chromatograph for these analyses. However, each proposed chromatograph requires an extensive developmental effort, with no guarantee that the method will prove to be really satisfactory. Again, the reasons for not monitoring A-50 apply to N_2O_4.

RP-1 (Ref MSFC-SPEC-342):

1) Mercaptans will be monitored by nondispersive infrared at 3.92 μ;

2) Aromatics will be monitored by nondispersive infrared at 5.1 μ;

3) Olefins will be monitored by nondispersive infrared at 11 μ;

4) Existing and potential gums will not be monitored;

5) Moisture will be monitored by an ultraviolet analyzer;

6) All the above instruments require a vaporized sample for proper operation; therefore, these instruments must be used in conjunction with a high-temperature vaporizer and the analyses made in the vapor phase;

7) Sulfur in solution could possibly be determined by variations in light transmission monitored by a photocell. This technique will take a long time for development. Sulfur not in solution will probably be filtered out mechanically and will not contribute significantly to the total sulfur content.

d. Specific Design Criteria and Equipment Recommendations

1) Design Criteria

Paramagnetic Oxygen Analyzer:

1) The instrument shall be capable of determining O_2 purity to 99.6% minimum;

2) It shall have a full-scale range of from 99 to 100%;

3) Accuracy shall be ±2% of full-scale range;

4) It shall be explosion proof for use in hazardous areas;

5) It shall be capable of withstanding the environment expected for GSE associated with a launch;

6) Its response time shall be less than 1 min for 100%;

7) It shall operate from a 110-v, 60-cps, power source;

8) It shall be capable of analyzing a sample stream flowing at a rate of 200 cc/min;

9) The amplifier shall have a 100-mv full-scale output;

10) The amplifier shall have an output impedance of less than 1 ohm;

11) It shall be capable of desired performance over an ambient temperature range of 30 to 150°F;

12) It shall have a parallel output signal for visual readout and recorder output;

13) It shall be capable of operating a recorder from a minimum distance of 600 ft;

14) It shall be capable of calibration at its field location;

15) Calibration shall be required no more frequently than once every 7 days or following launch;

16) The associated electronics shall be installed in standard 19-in. panels for rack mounting.

Total-Hydrocarbon Analyzer:

1) The instrument shall be capable of determining total hydrocarbon content in excess of 5 ppm for the nitrogen, helium, and hydrogen systems and 50 ppm for the oxygen system;

2) It shall be of the flame-ionization type;

3) The instrument shall have a range of 0 to 100 ppm;

4) Sensitivity shall be 1 ppm at an attenuation of X1;

5) Repeatability shall be ±1% of full scale with successive samples;

6) The instrument shall have levels of attenuation of 1, 10, 100, and 1000;

7) The response time shall be less than 1 sec;

8) The instrument shall be explosion proof for use in hazardous areas;

9) It shall be capable of withstanding the environment expected for GSE associated with a launch;

10) Its power requirements shall be 115 ± 15 v, 60 cps;

11) It shall require calibration no more frequently than once every 7 days or following a launch;

12) It shall be capable of calibration at its field location;

13) It shall be capable of desired performance over an ambient temperature range of 30 to 150°F;

14) It shall be capable of analyzing a sample stream flowing at a rate of 200 cc/min;

15) It shall have a parallel output signal for visual readout and recorder output;

16) The amplifier output shall have 100-mv full-scale output;

17) The amplifier output impedance shall be less than 1 ohm;

18) It shall be capable of operating a recorder from a minimum distance of 600 ft;

19) The associated electronics shall be installed in standard 19-in. panels for rack mounting.

PPM O_2 Analyzer:

1) The instrument shall be capable of determining O_2 concentration to a level of 50 ppm in nitrogen;

2) It shall have a full-scale range of from 0 to 50 ppm;

3) It shall have an accuracy of ±1% full-scale range;

4) It shall be explosion proof for use in hazardous areas;

5) It shall be capable of withstanding the environment expected for GSE associated with a launch;

6) The instrument shall require calibration no more frequently than once every 24 hr or following a launch;

7) Response time shall be 90% of total reading in 10 sec;

8) Power requirements shall be 115 ± 15 v, 50/60 cps;

9) It shall be capable of desired performance over an ambient temperature range of 30 to 150°F;

10) The instrument shall be capable of calibration at its field location;

11) Repeatability shall be ±1% of full scale;

12) It shall be capable of analyzing a sample stream flowing at a rate of 200 cc/min;

13) It shall have a parallel output signal for visual readout and recorder output;

14) The amplifier output shall have 100-mv full-scale output;

15) The amplifier output impedance shall be less than 1 ohm;

16) It shall be capable of operating a recorder from a minimum distance of 600 ft;

17) The associated electronics shall be installed in a standard 19-in. panel for rack mounting.

Electrolytic Hygrometer:

1) The instrument must be capable of monitoring moisture at a level of 11.5 ppm for the moisture content in N_2, and at a level of 3 ppm for moisture content in O_2 (Grade C);

2) The full-scale range shall be 0 to 150 ppm for the N_2 systems instrument and 0 to 10 ppm for the O_2 systems instrument;

3) Accuracy for both instruments shall be ±5%;

4) The instruments shall be explosion proof for use in hazardous areas;

5) The instruments shall be capable of withstanding the environment expected for GSE associated with a launch;

6) Both instruments shall be equipped with a rhodium electrode;

7) Response time shall be less than 1 sec;

8) The instrument shall require calibration no more frequently than once every 7 days or following launch;

9) Power requirements shall be 100 to 125 v, 50 to 60 cps;

10) It shall be capable of desired performance over an ambient temperature range of 30 to 150°F;

11) The instrument shall be capable of calibration at its field location;

12) Sensitivity shall be less than 1 ppm;

13) Repeatability shall be ±1% of full scale;

14) It shall be capable of analyzing a sample stream flowing at a rate of 100 cc/min;

15) It shall have a parallel output signal for visual readout and recorder output;

16) The amplifier output shall have 100-mv full-scale output;

17) The amplifier output impedance shall be less than 1 ohm;

18) It shall be capable of operating a recorder from a minimum distance of 600 ft;

19) The associated electronics shall be installed in standard 19-in. panels for rack mounting.

Process Gas Chromatograph:

1) Applications using chromatographs were listed under equipment recommendations. For each application, the chromatograph shall be capable of monitoring the contaminants to the maximum allowable concentration specified in the applicable fluid specification;

2) Range shall be from 0 to 50 ppm for the required analyses for contaminants in Category 1 fluids, and 0 to 100% for analyses required for Category 2 fluids;

3) It shall be capable of making resolutions less than 1 ppm;

4) Sample size shall be compatible with the column and analysis requirements for all resolutions including those of less than 1 ppm;

5) Reproducibility shall be ± 1/2% of full-scale range;

6) The instrument shall be explosion proof for use in hazardous areas;

7) The instrument shall be capable of withstanding the environment expected for GSE associated with a launch;

8) Time required for total sample analysis shall be 15 sec to 2 min;

9) The instrument shall require calibration no more frequently than once every 24 hours or following a launch;

10) It shall be capable of calibration at its field location;

11) Power requirements shall be 100 to 128 v, 50 to 60 cps;

12) Carrier gas shall flow at 50 to 100 cc/min;

13) One instrument shall contain a minimum of two columns;

14) It shall be capable of desired performance over an ambient temperature range of 30 to 150°F;

15) It shall have a parallel output signal for visual readout and recorder output;

16) The amplifier output shall have 100-mv full-scale output;

17) The amplifier output impedance shall be less than 1 ohm;

18) It shall be capable of operating a recorder from a minimum distance of 600 ft;

19) The associated electronics shall be installed in standard 19-in. panels for rack mounting.

Mass Spectrometer:

1) Applications using the mass spectrometer were listed under equipment recommendations. For each application, the mass spectrometer shall be capable of monitoring the contaminants to the maximum allowable concentration specified in the applicable fluid specification;

2) Range shall be from 0 to 50 ppm;

3) Sample size shall be compatible with the requirements of the instrument for a particular analysis;

4) Sensitivity shall be 1 ppm;

5) Accuracy shall be ± 1/2 ppm at the 1-ppm level;

6) The instrument shall be explosion proof for use in hazardous areas;

7) The instrument shall be capable of withstanding the environment expected for GSE associated with a launch;

8) Time required for analysis shall be 1 to 5 sec for one parameter;

9) The instrument shall require calibration no more frequently than once every 24 hr or following a launch;

10) It shall be capable of calibration at its field location;

11) Power requirements shall be 100 to 125 v, 50 to 60 cps;

12) The instrument shall be capable of analyzing a minimum of 15 separate sample streams, each flowing at a rate of 100 to 200 cc/min;

13) It shall be capable of desired performance over an ambient temperature range of 30 to 150°F;

14) It shall have a parallel output signal for visual readout and recorder output;

15) The amplifier output shall have 100-mv full-scale output;

16) The amplifier output impedance shall be less than 1 ohm;

17) It shall be capable of operating a recorder from a minimum distance of 600 ft;

18) The associated electronics shall be installed in standard 19-in. panels for rack mounting.

Infrared and Ultraviolet Analyzers:

1) These instruments shall be capable of performing the analysis for moisture, aromatics, olefins, and mercaptans to the required levels of MSFC-SPEC-342 for RP-1;

2) The instruments shall be dual beamed;

3) The instruments shall emit a beam of light having a wavelength specific to the analysis being performed, along with a reference beam of light;

4) Full-scale range shall be from 0 to 50%;

5) Accuracy shall be ± 1/2% of full-scale range;

6) Response time shall be 10 sec or less;

7) The instruments shall be capable of analyzing a sample stream flowing at 100 cc/min;

8) The instruments shall be explosion proof for use in hazardous areas;

9) They shall be capable of withstanding the environment expected for GSE associated with a launch;

10) The instruments shall require calibration no more frequently than once every 24 hr or following a launch;

11) They must be capable of calibration at their field locations;

12) Power requirements shall be 110 to 115 v, 50 to 60 cps;

13) The instruments shall be capable of desired performance over an ambient temperature range of 30 to 150°F;

14) The instruments shall have a parallel output signal for visual readout and recorder output;

15) The amplifier output shall have 100-mv full-scale output;

16) The amplifier output impedance shall be less than 1 ohm;

17) The instruments shall be capable of operating a recorder from a minimum distance of 600 ft;

18) The associated electronics shall be installed in standard 19-in. panels for rack mounting.

2) Specific Equipment Recommendations

Paramagnetic Oxygen Analyzer - Beckman paramagnetic oxygen analyzer, Model G-2.

Total-Hydrocarbon Analyzer:

1) The Beckman total-hydrocarbon analyzer Model 108A for nonhazardous areas and the Model 106E for hazardous areas;

2) The Bendix total-hydrocarbon analyzer.

PPM Oxygen Analyzer:

1) Beckman oxygen analyzer, Model 778;

2) Bendix ppm oxygen monitor.

Electrolytic Hygrometer:

1) Beckman electrolytic hygrometer with a rhodium electrode;

2) CEC moisture monitor, Model 26-350.

Process Gas Chromatograph:

1) Bendix gas chromatograph with high-speed column;

2) Melpar gas chromatographic monitor;

3) Perkin-Elmer gas chromatograph with high-speed column;

4) Beckman Model 320-D process gas chromatograph.

Mass Spectrograph - CEC mass spectrographic analyzer; model will be of special construction.

Infrared and Ultraviolet Analyzer - Perkin-Elmer miniature infrared and ultraviolet analyzers.

The operating procedures and instructions for the above instruments shall be those supplied by the manufacturer at time of installation at Kennedy Space Center.

e. Discussion

Purity Monitoring - It may be noted under equipment recommendations that purity of nitrogen, hydrogen, and helium will not be monitored directly. The reasons for this are twofold. One is that the purity measurement of these commodities is an extremely difficult process even with the best laboratory instrument. The second is that no instrument was located, with the exception of the helium purity monitors by GOW-MAC and Analytic Systems, Inc (ASI), that was capable of making those measurements on a continuous or semicontinuous basis. The ASI instrument is capable of making the helium purity determination but there is some doubt that the GOW-MAC helium purity analyzer is capable of making the analysis at the 99.995% purity level required by specification. Faced with these difficulties, it is much more practical to determine purity of these commodities by totalizing the concentration of impurities and subtracting that value from 100%.

Selection of Monitoring Points - In general it is the philosophy of this study to provide for at least two monitoring points per system, designated in the schematics by M. These are at the outlet of the pad storage container and on the main stream just after the line enters the ML. Other monitoring points have been placed as convenient or necessary. Examples of the convenient monitoring points are those located on the recirculation system at the pad storage area.

Examples of monitoring points other than the necessary ones are those located in lines used for low flow rate conditions. In some cases these lines are the same as those used for high flow rates. Because the design of the DFS is a function of flow rate, it was necessary to recommend two wedges for the same system thus giving rise to additional monitoring points. Some systems, the lox system, for example, have two or more main lines running from the storage area to the pad. Each line requires a monitoring point at the storage area and another at the pad.

It was the original intention of this program to recommend monitoring points as close to the airborne interface as practical. The most practical point for monitoring proved to be a point on the main line just after it entered the ML. The reasons for choosing this point are many. One is that all the instrumentation can be kept

at the base of the ML. Selection of this point eliminates the necessity of long sample lines and long lengths of electrical cable thereby considerably reducing the total weight per monitor. A third reason is that the point is close enough to the airborne interface for the monitor to give a good indication as to the quality of the commodity that finally reaches the vehicle and yet is far enough away from the airborne interface that, in the event of an indication of contaminated fluid, flow can be stopped before an excessive amount of contaminated fluid is loaded aboard the vehicle.

If monitoring the lines at the airborne interface is required, a series of alternative monitoring points has been proposed. These have been designated in the schematic by MA (see Chapter IV). The instrumentation required at these points would be exactly the same as that required at the monitoring points. Longer sample lines would then be required to reach the central mass spectrometer servicing the ML area. In some cases an optional monitoring point has been suggested. This point is designated in the schematics by MO. These points are generally placed on the lines that return fluids to the storage area from the vehicle. In some cases these return lines in the pad area differ from the fill lines.

Instrumentation - As can be seen in the schematic for instrumentation location (see following subsection f, Electronic Considerations), most monitoring points have their own separate set of required instrumentation. It is the general philosophy to provide a separate continuous monitor at every possible point. An example of this is that wherever a hydrocarbon analysis is required, a total-hydrocarbon analyzer is provided. The semicontinuous instruments, e.g., the mass spectrometer, service a number of monitoring points with a minimum time required to make a complete cycle through all the sample streams.

It may also be noted that one set of instruments will be used to service more than one monitoring point wherever this practice appears to be feasible. This will occur most often in the pad storage areas, and all monitoring points will be in systems handling a common commodity.

It is essential for a system to have one set of monitors in the storage area and one set of monitors at the ML or AGCS area for purposes of system control. It is not desirable to have an individual monitor capable of stopping fluid flow if it sees a brief slug of contamination. Instead both monitors should work together in this function. If the monitor located at the storage area sees a slug of contamination, it should not necessarily stop system flow because it is likely that this contamination will be severely diluted in the long run of line between the storage area and the vehicle. In fact the monitor at the ML will probably not detect this contamination. On the other hand, if the monitor at the ML detects this contamination but the storage area monitor has been sensing good quality fluid, the ML monitor should not be able to stop system flow. Flow should be stopped if both monitors are reading contamination at the same time or if the pad storage area monitor has been reading excessive contamination for a relatively long (approximately 30 sec) period.

The monitoring system should be wired into a programer capable of controlling sample stream selection for the noncontinuous analyzers, storing data, sounding an alarm for excessive contamination, controlling the system if required, and performing all other functions required to make a fully integrated, automatic contamination control system.

Sample Lines - As evidenced from the discussion provided by CEC, long sample lines are not a problem if they are maintained at a suitable temperature and pressure and the sample stream flows at a given velocity. However, it is more desirable to keep sample lines as short as possible, especially where there is a chance of a contaminant condensing out on the wall of the tubing, as would be the case if a nonvolatile hydrocarbon is a contaminant.

Deviations from Recommendations for Monitoring Equipment Proposed at the Time of the Midway Report - The principal deviation between the present recommendations for monitoring equipment for installation at Kennedy Space Center and those presented during the midway oral report is the use of a mass spectrometer for analysis of Category I fluids where a gas chromatograph was originally proposed. This is true in all cases except for the determination

of total percentage purity analysis, which was discussed previously. The greatest of many advantages the mass spectrometer offers over a gas chromatograph is the time required for an analysis. The mass spectrometer is also capable of handling many sample streams, whereas the gas chromatograph is capable of handling only a few. Also because of the variety of columns and temperature requirements necessary to perform the analyses associated with the Category I fluids, many gas chromatographs would be required, while one mass spectrometer is capable of making these analyses. The other deviation of the present recommendations from those presented at the midway oral report is the use of an ultraviolet analyzer to monitor moisture in RP-1 rather than the originally proposed Micro-Scan. This was necessary because of the nondiscriminatory properties of the Micro-Scan.

f. Electronic Considerations

The electronics portion of this study will be confined to the monitoring instrumentation. The monitoring electronics will be a fixed installation whereby the data and control will be both on location and remote at the LCC. The sampling instruments will not be considered at this time because the sampling instrument will, by definition, be portable, and capable of sampling at any location within the complex; and the sensor electronics and display should be a self-contained unit, designed for specific parameters.

The instrument manufacturers were given a "Query for Sensors and Electronics" whereby pertinent information could be obtained to derive the compatibility to NASA measurement systems. Those that responded were Beckman Instruments, Bendix-Greenbrier Instruments, Consolidated Electrodynamics Corp, Gow-Mac, Melpar Inc, Mine Safety Appliances Co, and Perkin-Elmer. The information received is summarized in Fig. V-21.

The requirements for the electronics were established by KSC and it is inferred from these that it is desirable to have signal voltages of 0 to 100 mv or 0 to 5 v, as these are common to the present systems. However, any other signal voltages could be handled by NASA and the above outputs are not a fixed requirement. The output impedances of the electronics desired (and generally desired in any measurement system) are less than 1 ohm, and impedances 100,000 ohms or greater are similarly desirable as input conditions.

Manufacturer and Instrument	Questions & Answers																											
	1	2	3	4	5	6	7	8	9	10	11	12	13	14	15	16	17	18	19	20	21	22	23	24	25	26	27	28
Bendix T/C Det.	Y	M	N	Y	Lab Control	Temp	R	Contin-uous	Y	C	20 cps	A	250 ohms	1 kilohm	mvdc	Y	Y	Y	5 Cond 16 g Shield	P	Y	Gas Std	Daily	1 Cycle	Y	D	D	115 v 60 cps
PGCM HFD	Y	M	N	Y			R	Peri-odic	Y	P	NA	A	10^5 meg	1 kilohm	mvdc	Y	Y	Y	Coax + 14 Cond	P	Y	Gas Std	Daily	1 Cycle	Y	D	D	115 v 60 cps
T-HC	Y	M	N	Y			R	Peri-odic	Y	P	NA	A	250 ohms	1 kilohm	mvdc	Y	Y	Y	Coax + 14 Cond	P	Y	Gas Std	Daily	5 min	Y	D	D	115v 60 cps
CEC Mass Spectrometer	?	M	N	Y	Temp	None	R	Contin-uous or Periodic	Y	C/P	20 cps	A	0.02 ohms	1 kilohm	mvdc	Y	M	Y	2 PR Shield 12 Cond	P	Y	Gas Std	Daily	5 min	Y	D	D	115 v 60 cps
Gow Mac (Sensor Mfg Only)	Y	M	--	--	Temp	Temp	R	Periodic	Y	C	20 cps	A	8 kil-ohm	8 kilohm	mvdc	Y	M	Y	4 Cond	P	Y	Gas Std	Daily	10 min	-	D	D	115 v 60 cps
Perkin-Elmer	Y	M	Y	D	Lab Req/D	Temp 70 ± 5°F	R	Periodic	Y	P	20 cps	A	10^9 meg	500 ohms	mvdc (D)	D	N	Y	No Data	P	Y	Gas Std	Daily	10 min	D	D	D	115 v 60 cps
MSA	Y	Y	Y	M	Temp	Temp	V/R	Periodic and con-tinuous	Y	C/P	20 cps	A	No Data	No Data	mvdc	M	M	Y	No Data	P	Y	Gas Std	Daily	15 min	Y	Y	D	115 v 60 cps
Melpar Inc GC & FI	Y	Y	N	Y	32 to 180°F	50 to 120°F	V	Periodic	Y	P/C	DC	A	500 ohms	100 kilohm	0 to 5v	Y	Y	Y	6 Cond	P	Y	Gas Std	Semi-annual	5 min	Y	Y	Y	115 v 60 cps
Beckman Instruments Hydrocarbon Analyzer No. 108	Y	Y	Y	N	50 to 120°F	50 to 120°F	V/R	Contin-uous	Y	C	-	A	100 ohms	100 ohm	0 to 10 mvdc	Y	N	N	No Ans	P	Y	Gas Std	Daily	10 min	Y	M	D	115 v 60 cps
PPM O_2 Analyzer No. 80	Y	Y	Y	N	50 to 110°F	50 to 110°F	R	Contin-uous	Y	C	-	A	No Ans	No Ans	0 to 5 mvdc	Y	N	N	No Ans	P	Y	Gas Std	Daily	10 min	Y	M	D	115 v 60 cps
Purity O_2 Analyzer No. G2	Y	Y	N	N	50 to 110°F	50 to 110°F	R	Contin-uous	Y	C	-	A	No Ans	No Ans	0 to 5 mvdc	Y	N	Y	6 Cond	P	Y	Gas Std	Daily	10 min	Y	M	D	115 v 60 cps
Electrolytic Hygrometer No. 184	Y	Y	Y	Y	-20° to +120°F	-20° to +120°F	V/R	Contin-uous	Y	C	-	A	370/ 1850 ohms	370/ 1850 ohms	0 to 10 mvdc	Y	N	N	No Ans	P	No Ans	No Ans	No Ans	No Ans	Y	M	D	115 v 60 cps

Question Key

1. Is the sensor designed for laboratory use?
2. Is the sensor designed for field use? (If not, could it be modified?)
3. Are the sensor and electronics combined in one unit?
4. Can the sensor operate remotely from the electronics?
5. What environment must be maintained for the sensor?
6. What environment must be maintained for the electronics?
7. What type of display (a) visual (b) recorder is used?
8. What time base is required or used?
9. Can the recorder or visual readout be remote from electronics?
10. Are the data continuous or periodic?
11. What is the output frequency response?
12. Is the output analog or digital?
13. What is the output impedance of the sensor?
14. What is the output impedance of the electronics?
15. What is the output voltage of the electronics?
16. Could the output voltage be modified to 0 to 5 vdc or 0 to 100 mvdc?
17. Can the sensor operate 600 ft or more from the electronics?
18. Can the electronics operate 600 ft or more from the recorder?
19. What type of cable is required?
20. What type of calibration, electronic or physical subsituation?
21. Can the calibration be done on location?
22. Is there any special calibration equipment required?
23. How frequently must the system be calibrated?
24. What is the total calibration time required?
25. Can the electronics be mounted in a 19-in. panel rack?
26. Is the system capable of system control?
27. Will the system meet NASA SP-80-D?
28. What power source is required?

Legend:

Y = Yes M = Modified
N = No D = To be designed

T/C Det = Thermal conductivity detector
PGCM HFD = Process gas chromatograph with a hydrogen flame detector
T-HC = Total hydrocarbon analyzer

Fig. V-21 Electronic Information Received from Instrumentation Manufacturers

The Oxygen Analyzer (Purity) - The oxygen purity analyzer will measure the paramagnetic properties of oxygen to provide automatic and continuous analysis. The response time of the paramagnetic measurements is faster than thermal conductivity. The output is 5 mv at an impedance of 25 ohms. The output is lower than desirable and would require additional amplification. The response time for 90% is in 10 sec. The oxygen analyzer requires a 24-hr warmup time and an ambient temperature of 50 to 100°F.

Total Hydrocarbons - The flame-ionization detector-electrometer would be a very desirable instrument for the detection of total hydrocarbons. The data would be continuous and the output is analog. The output impedance of the sensor is extremely high ($\approx 10^5$ meg). This is not too serious, as the amplifier for the sensor is physically small and could accompany the sensor, and the resultant output impedance would be less than 1 ohm. The output voltage is ±100 mv to ±10 v. These are all desirable characteristics and would adapt well to any measurement system.

The PPM Oxygen Analyzer - The polarographic oxygen electrode sensor for the PPM oxygen analyzer has a high output impedance with a very low signal level. The sensor cannot be separated from the electronics more than 125 ft. The polarographic sensor is inherently temperature sensitive. The errors due to temperature are less than 5% within the environmental range of 59 to 112°F. The accuracy of the sensor can be improved to 1% full scale by maintaining a constant sensor temperature. The sensor response is 90% in 10 sec. The amplifier output is designed to drive a 0- to 50-mv potentiometric recorder with the amplifier output impedance of ≈1 k. The output impedance and the output signal voltage would be sufficient to drive a submultiplexer. However, it is desirable to standardize the output to the 0- to 100-mv system.

The Electrolytic Hygrometer - The moisture will be monitored by an electrolytic hygrometer. The electrolytic hygrometer will have a sensitivity of less than 1 ppm with an accuracy of ±5% of full scale. The output would be analog and continuous. The output signal will be 0 to 100 mv. The sensor and the analysis unit can be separated up to 2000 ft. This unit will work well into any measurement system.

The GC Sensor and Associated Electronics - The data presented in Fig. V-21 indicate that gas chromatograph analyzers are taking their signals directly from the bridge and no further amplification is being used other than that within the potentiometric recorders. The output signals are 0 to 10 or 0 to 100 mv. This is generally true of the GC equipment under discussion as they have primarily been designed for laboratory usage and not for remote readout nor for control. The signal levels of 0 to 100 mv would work well into presently designed analog-to-digital (A to D) converters. The concept of a multiplex subsystem, having both the sensors and the associated electronics at the base of the ML does not pose a problem, as the proximity of these makes the requirement for long signal lines between the sensor and the A-to-D converter unnecessary. This leaves a relatively high output impedance (≈1 k) for the sensor that is subject to an undesirable signal-to-noise ratio. This condition is not serious because by taking extra care in the cable and shielding design, and possibly adding an amplifier at the sensor, this effect can be minimized.

Mass Spectrometer - The CEC mass spectrometer analyzer head has a high output impedance. Therefore, it is desirable to keep the control unit electronics as close to the analyzer assembly as possible. The control unit electronic output impedance is ≈1 k. The cable between the analyzer and the control unit is an unshielded 12-conductor cable plus a 2-pair shielded cable. CEC would keep the 1-kv power supply close to the analyzer assembly, thereby removing the high voltage from the common cable. The output of the CEC mass spectrometer control electronics is designed to drive a proximate potentiometric recorder in the millivolt range and would require amplification if long signal lines are used. The output would be sufficient for a multiplex system.

The Infrared and Ultraviolet Sensors - The infrared (IR) sensors will be used to detect the aromatics, olefins, and mercaptans contaminants in RP-1. The ultraviolet (UV) sensor will be used to detect moisture. The IR and UV electronics and amplifiers will be basically identical. The electronics and sensors will be combined into one unit ≈40 cu in. The specifications for the electronics are: The output impedance is less than 500 ohms. The output signal voltage is 0 to 5 v and will be analog and continuous. The output impedance and signal voltage will work well into any measurement system. The response time is ≈10 sec. The power requirements are less than 1 w.

The Monitoring System - The survey clearly shows that, with the present state of the art, no single instrument has been produced that will quantitatively measure all of the parameters to the resolution specified in the contamination specifications within this study. It is then necessary to combine several instruments into one system and one set of instruments could be programed to monitor several points (Fig. V-28 and V-37). These figures show such a scheme of monitoring points and combining of instruments. This scheme would require the use of programed monitoring and controlled data management.

Program and Control - A system of programing and control will be required to manage the multiple monitoring streams and parameter instruments. Figures V-22 thru V-27 illustrate the flow diagram of the data and control for the multiple monitoring points and identify the instruments selected for the parameters for Complex 39.

Figure V-28 shows a summary of the proposed instruments of Complex 39. The area of the highest density of contamination sensing instrumentation is at the base of the ML. There a mass spectrometer shall be programed to monitor 6 streams and 38 parameters for the Category I fluids. The total-hydrocarbon flame-ionization instruments will monitor 11 streams with 1 instrument per stream for the Category I operational fluids.

Three IR and one UV sensor will be used at the ML to monitor four parameters for RP-1. RP-1 will not require switching of electronics or streams, as there is only one RP-1 monitoring point selected at this time, at the ML area.

The large number of monitoring streams and parameters will require a system of programing of the instruments, of the sampling streams (valving), and of data management. The programing shall use the existing data and control links. The controls shall be automatic, shall be located in the LCC, shall operate remotely at the PTCR area, and shall be capable of selectable scope by manual operation at the LCC.

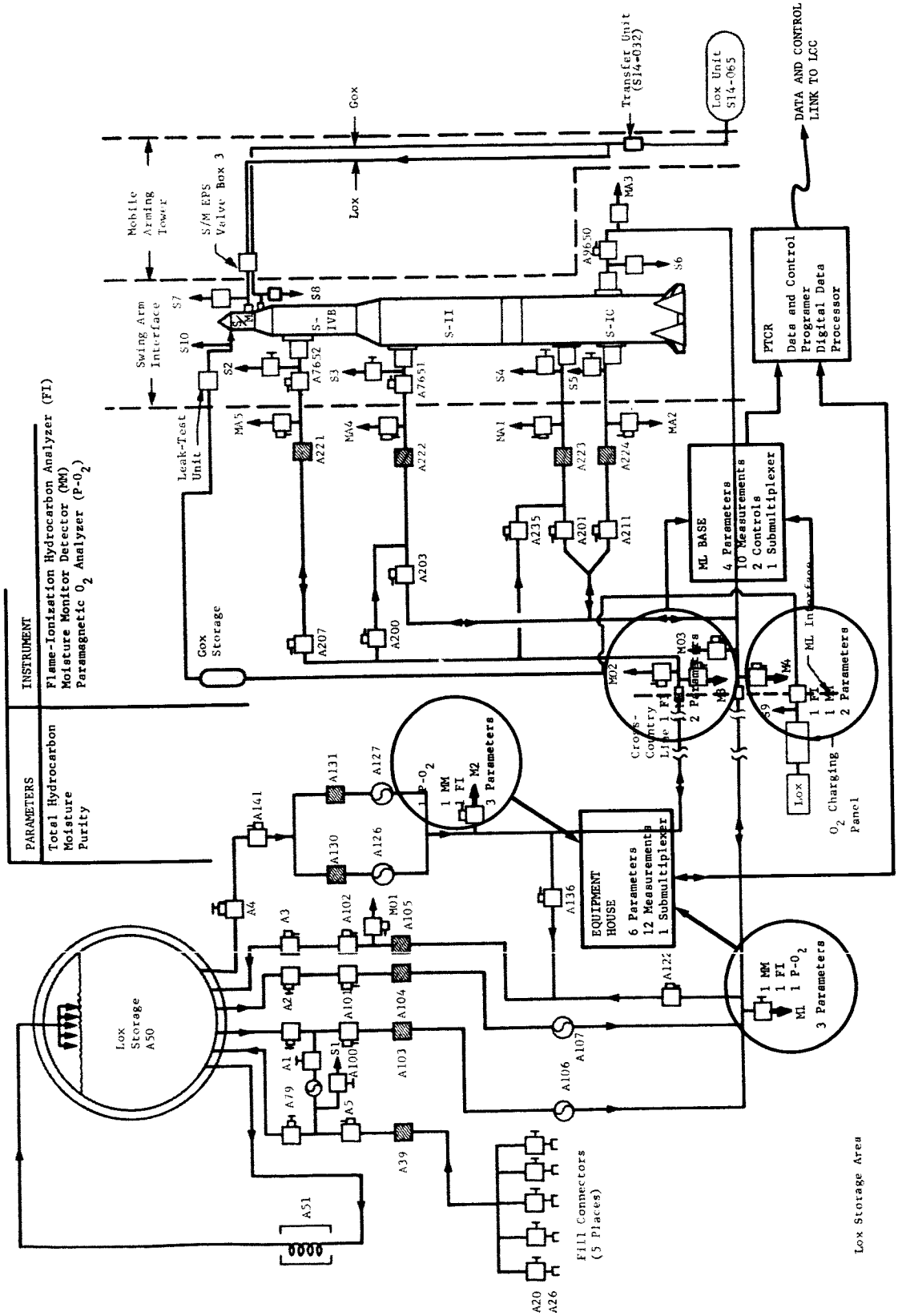

Fig. V-22 Data and Control Flow Diagram, Lox Transfer System, LC 39

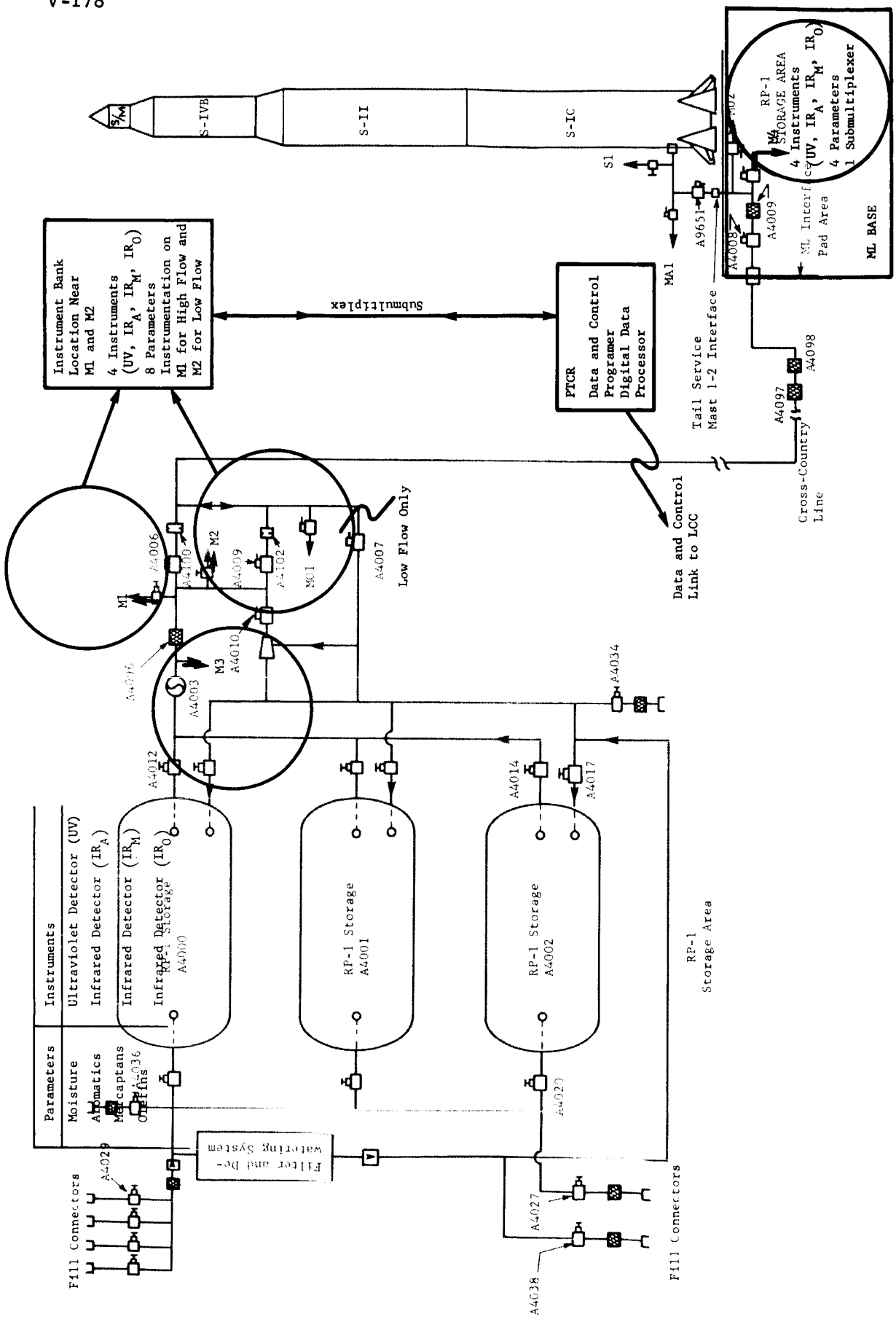

Fig. V-23 Data and Control Flow Diagram, RP-1 Transfer System, LC 39

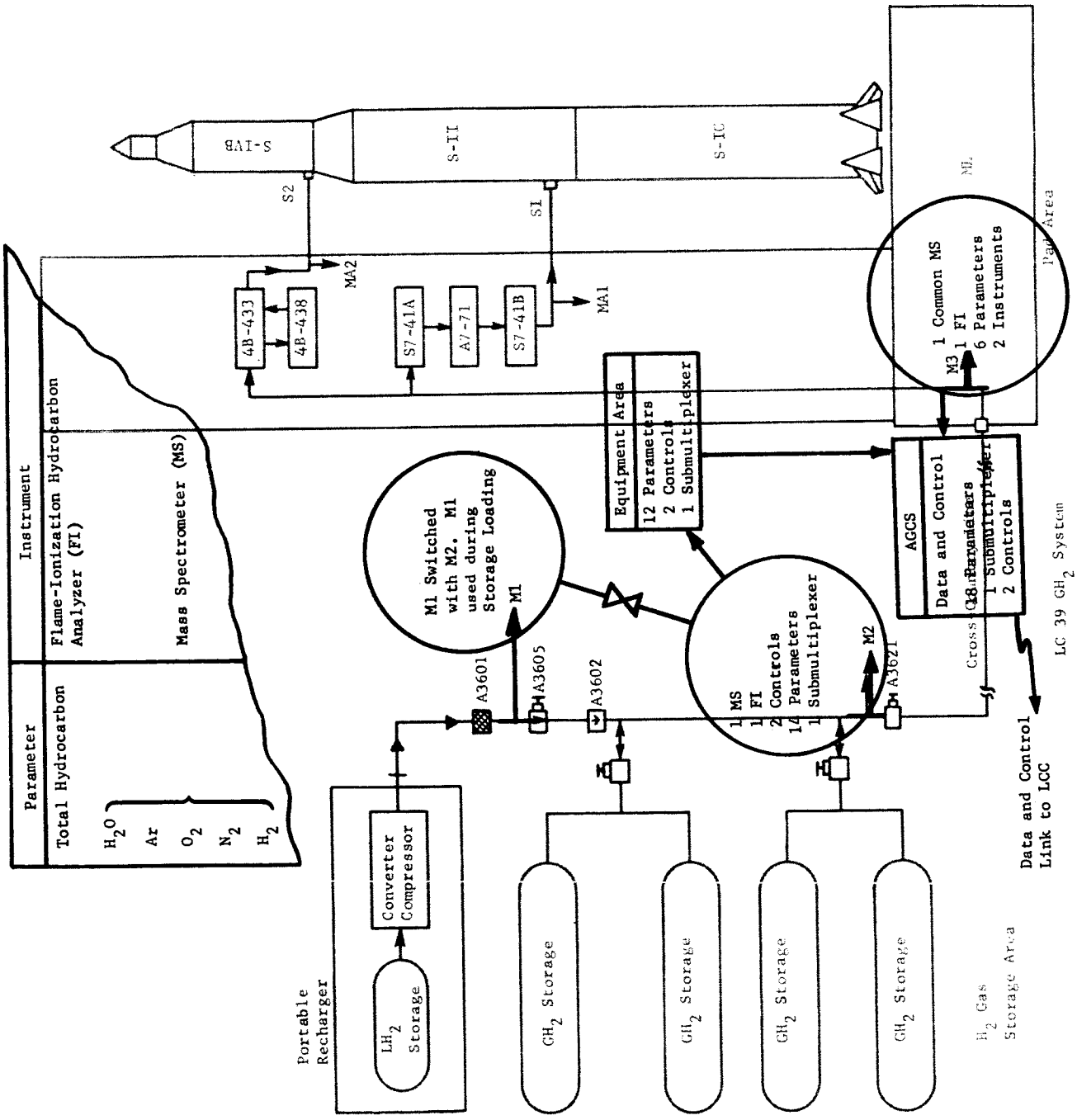

Fig. V-24 Data and Control Flow Diagram, GH_2 System, LC 39

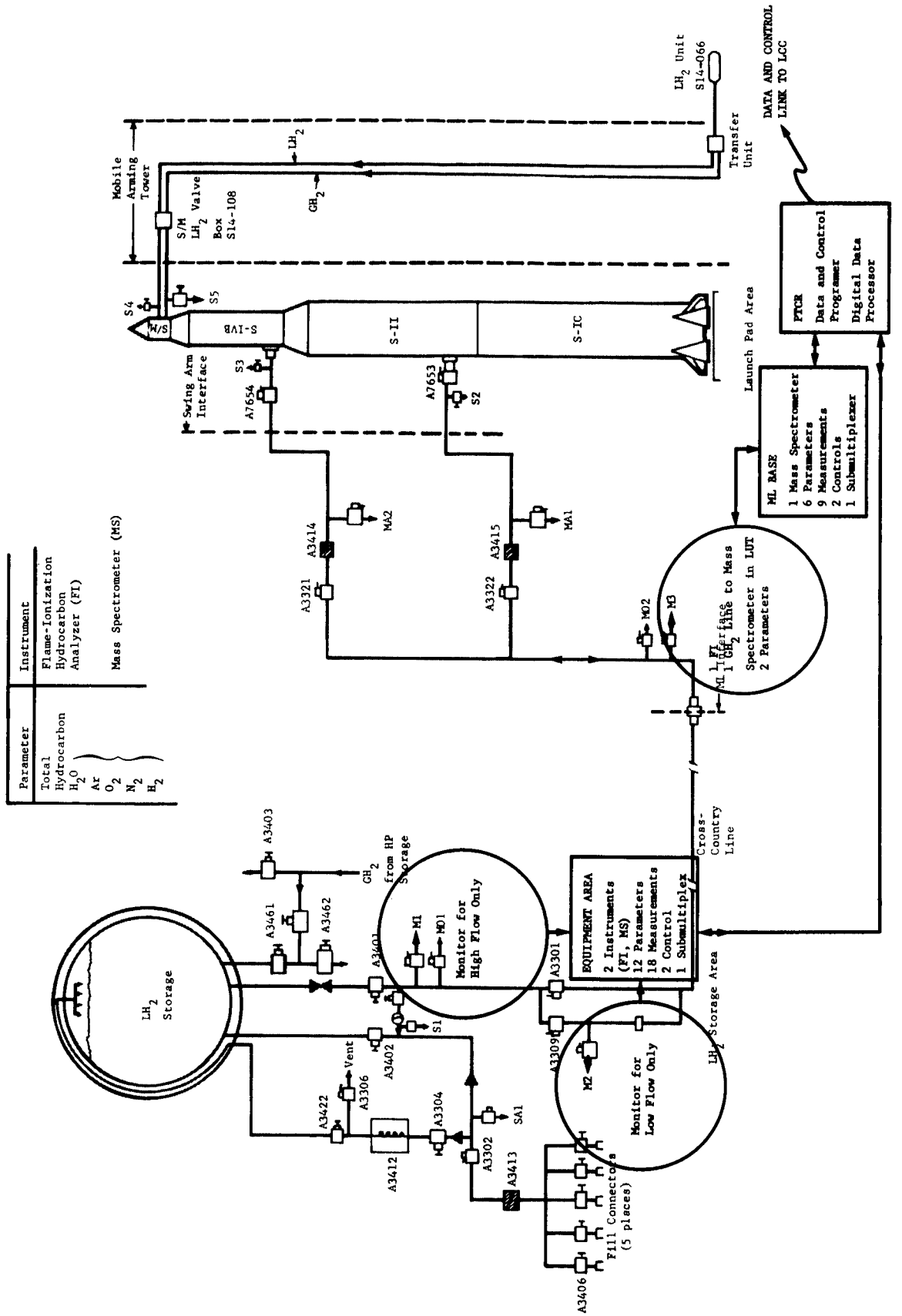

Fig. V-25 Data and Control Flow Diagram, LH_2 Transfer System, LC 39

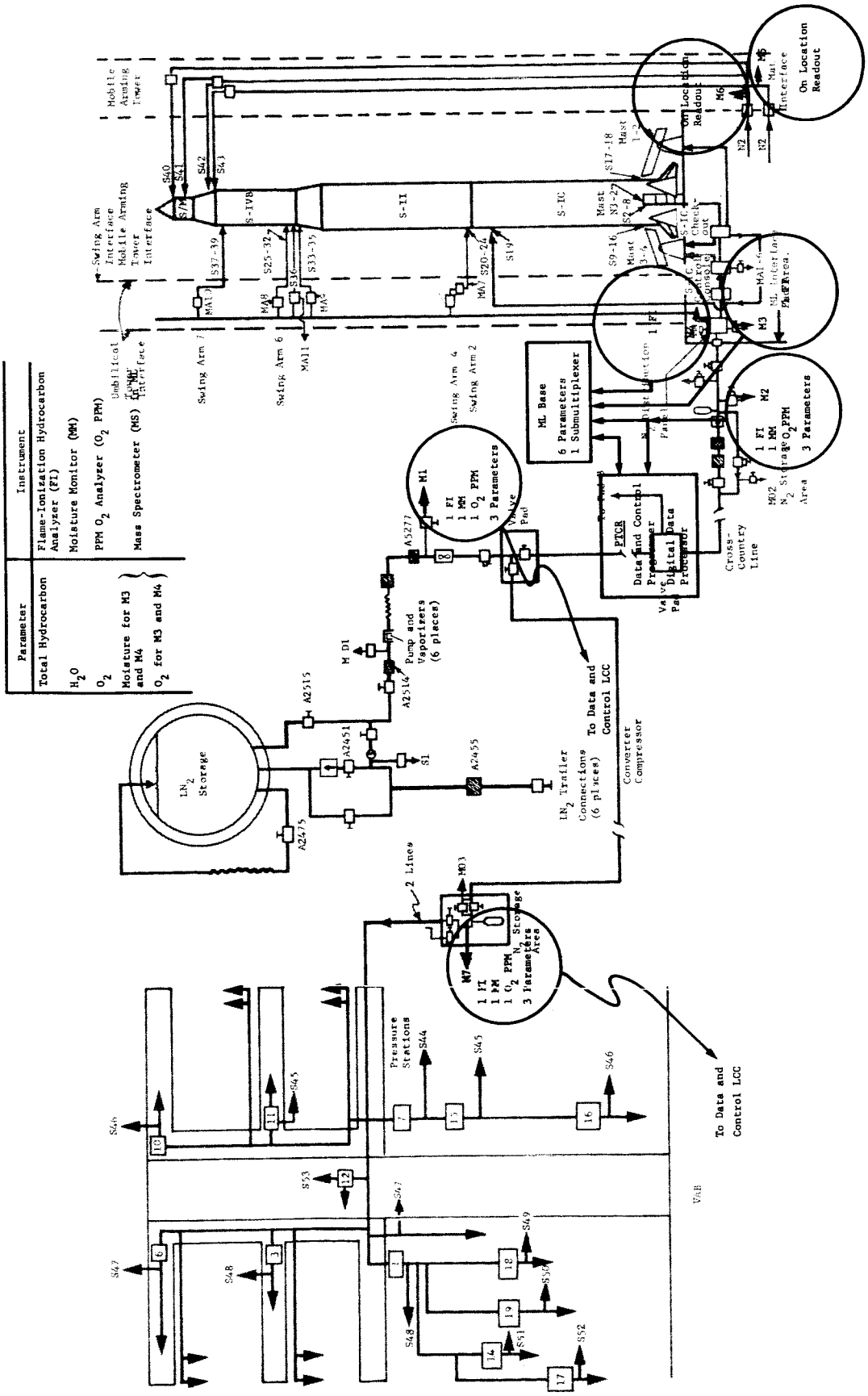

Fig. V-26 Data and Control Flow Diagram, GN_2 Gas System, LC 39

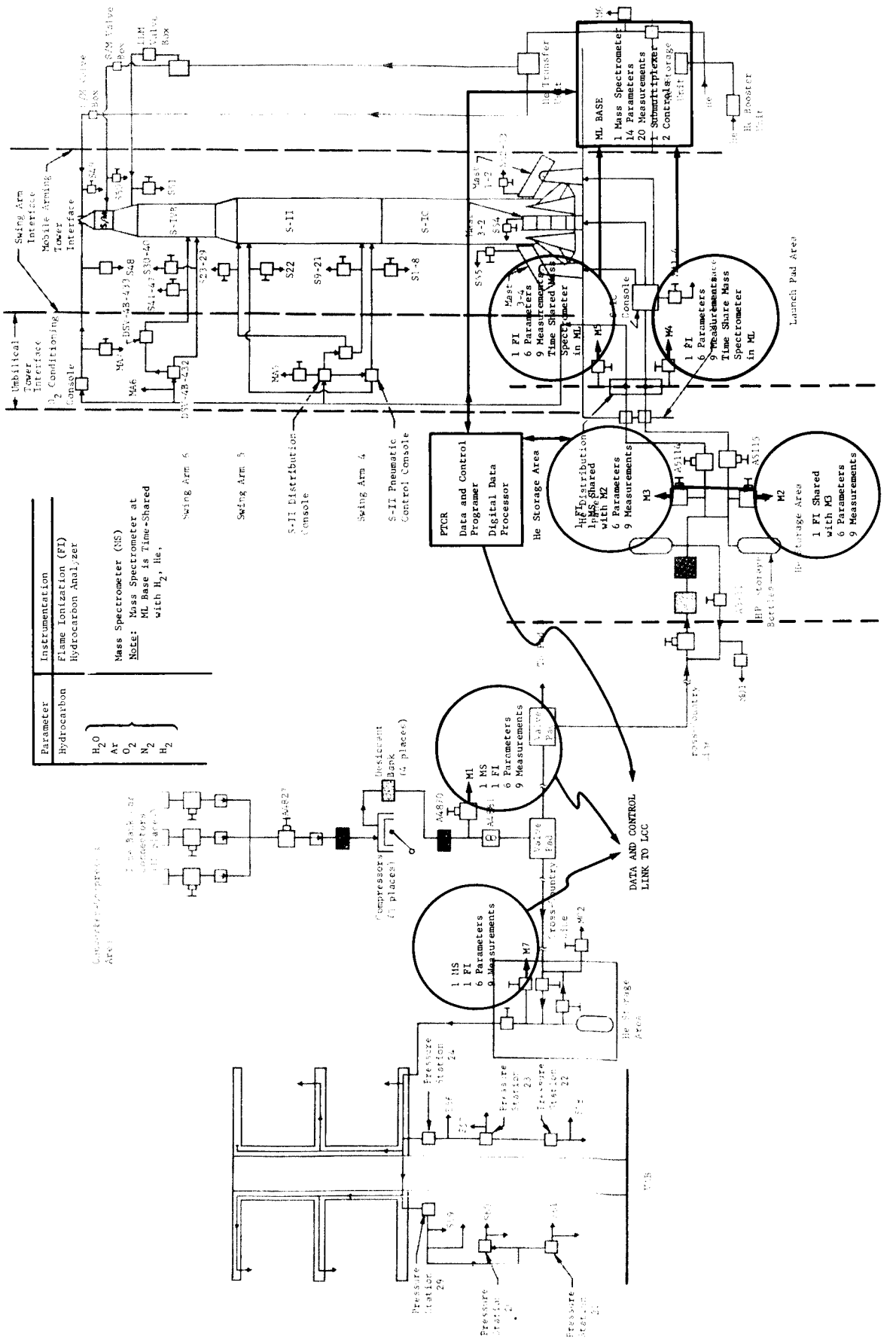

Fig. V-27 Data and Control Flow Diagram, Helium System, LC 39

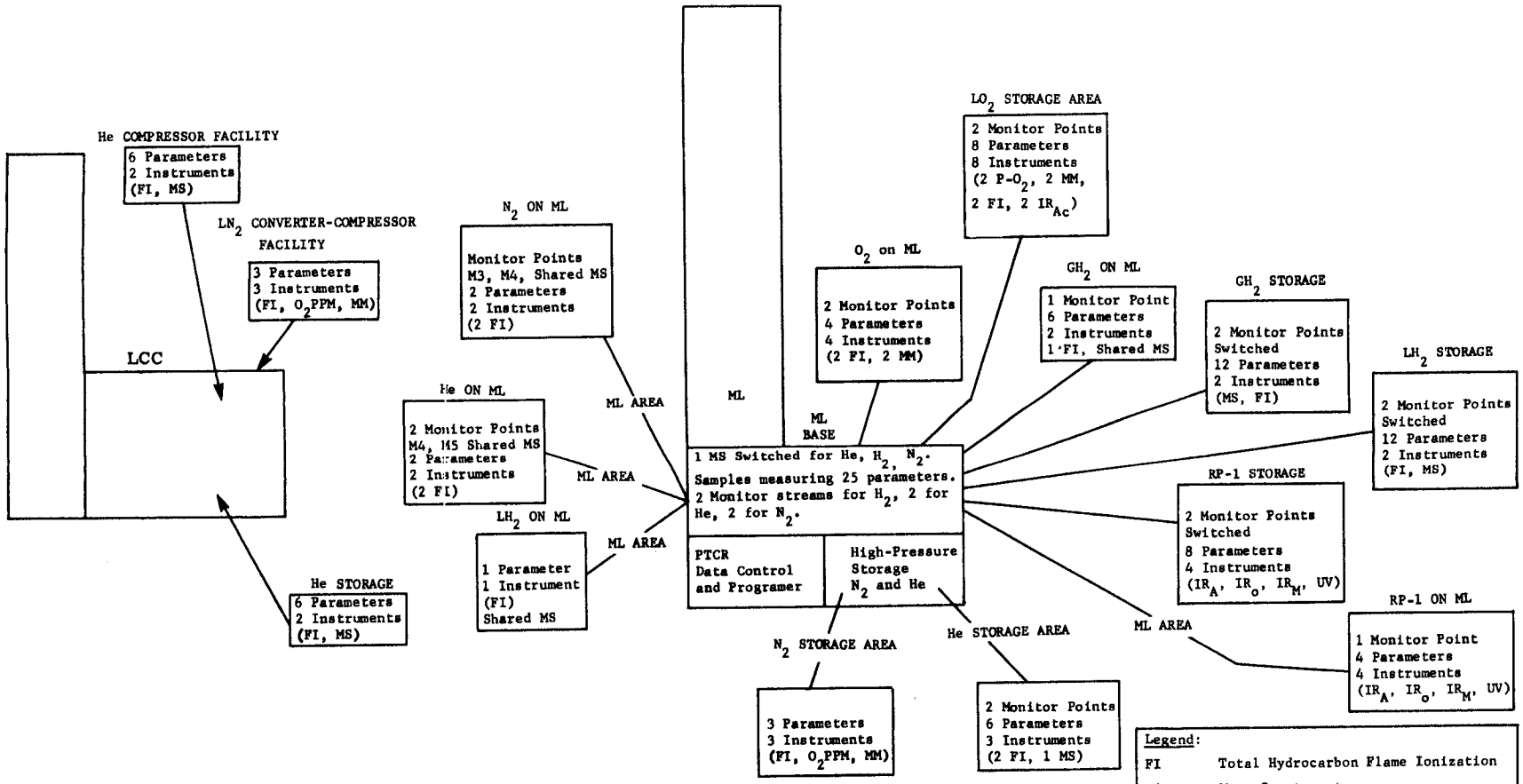

Area	Parameter	Instrument
He Storage and Converter-Compressor	15	7
ML	38	19
High-Pressure Storage	9	6
Pad Storage Areas	40	14
Total	102	48

Legend:

FI	Total Hydrocarbon Flame Ionization
MS	Mass Spectrometer
O_2PPM	Parts Per Million O_2 Analyzer
MM	Moisture Monitor
IR_A	Infrared Aromatic Detector
IR_o	Infrared Olefin Detector
IR_M	Infrared Mercaptan Detector
UV	Ultraviolet Moisture Detector
P-O_2	Paramagnetic O_2 Purity
IR_{Ac}	Infrared Acetylene Detector

Fig. V-28 Summary of Proposed Instruments for Complex 39

Storage area samples shall be piped to each respective equipment house where the monitoring instrumentation and submultiplexers will be located. The landline requirements from the equipment houses to the PTCR shall be two-pair shielded, one pair for the multiplex data and the second pair for control signals. The exceptions to these requirements shall be He and N_2 storage areas where the control and data link would be run directly to the LCC. Parallel, visual readout would be available at the equipment houses or at the converter compressor facility.

Figures V-29 thru V-36 show the data and control flow diagrams for Complexes 34 and 37 for the multiple monitoring points and identify the instruments selected for the parameters. Figure V-37 shows the summary of the instrumentation parameters selected for Complexes 34 and 37. The highest concentration of contamination-sensing instrumentation for monitoring is located at the AGCS. There, a mass spectrometer shall be programed to monitor 6 streams and 24 parameters for the Category I operational fluids. The total-hydrocarbon flame-ionization instruments will monitor nine streams with one instrument per stream for the category fluids. Complexes 34 and 37 will require a programer for the instruments, sampling streams (valves), and data management as on Complex 39. The instrumentation and control shall use the existing landline spares. The control shall be automatic, shall be located at the LCC, shall operate remotely at the AGCS, and shall be capable of selectable scope by manual operation at LCC.

Storage area samples will be piped to each respective equipment house where the monitoring instruments will be located. The data and control link shall be hardwire to the LCC or the AGCS where applicable.

The Contamination Instrumentation Data System - The heart of the contamination instrumentation data acquisition and display system is located in the LCC. Figure V-38 is the flow diagram for this system. The data, control, and display console will function as a real time data display and alarm system. Continuous real time data channels will be selectable from the demultiplexer for specific displays. The out-of-tolerance signals for all parameters will be automatically displayed on a visual

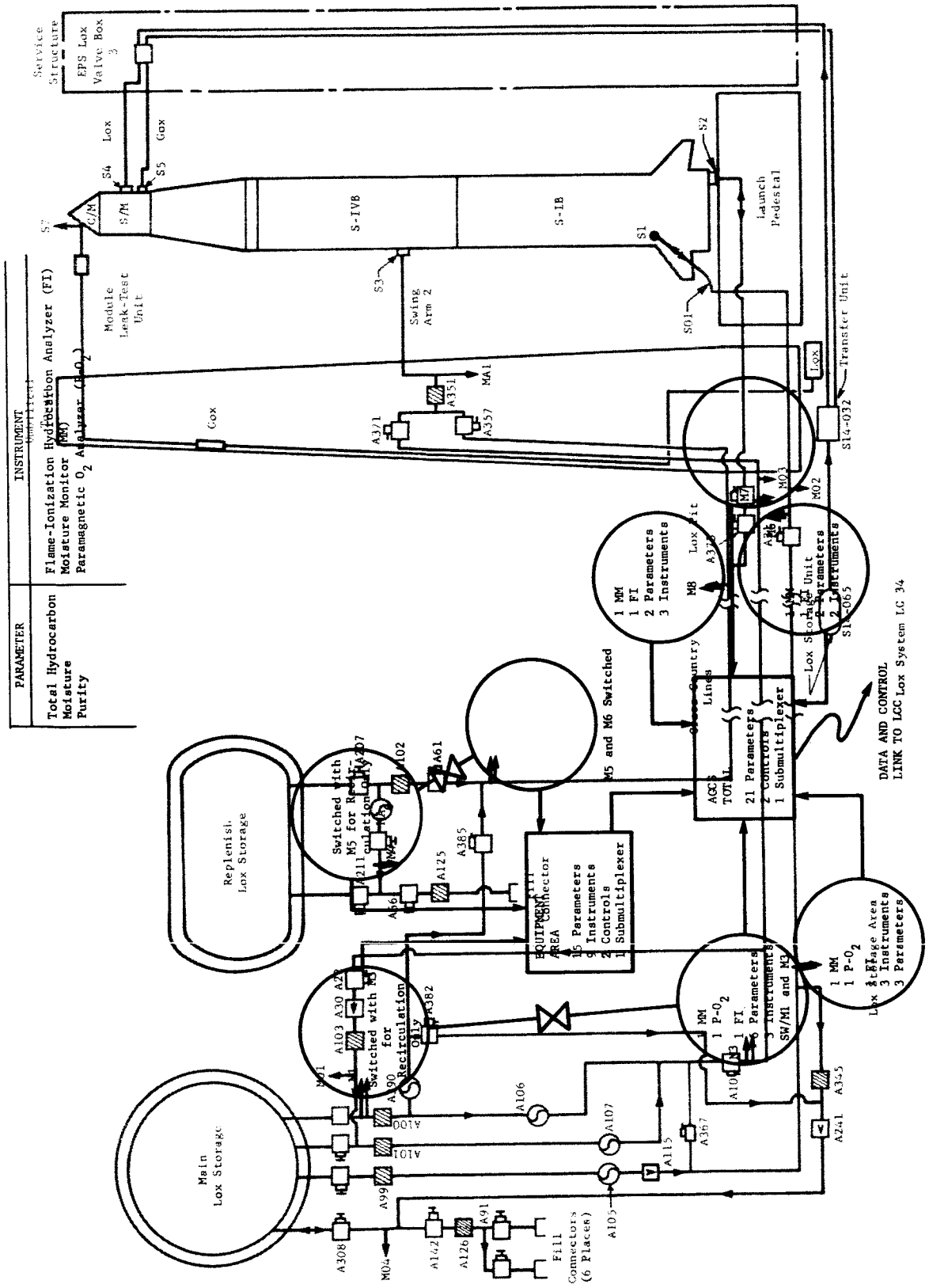

Fig. V-29 Data and Control Flow Diagram, Lox Transfer System, LC 34

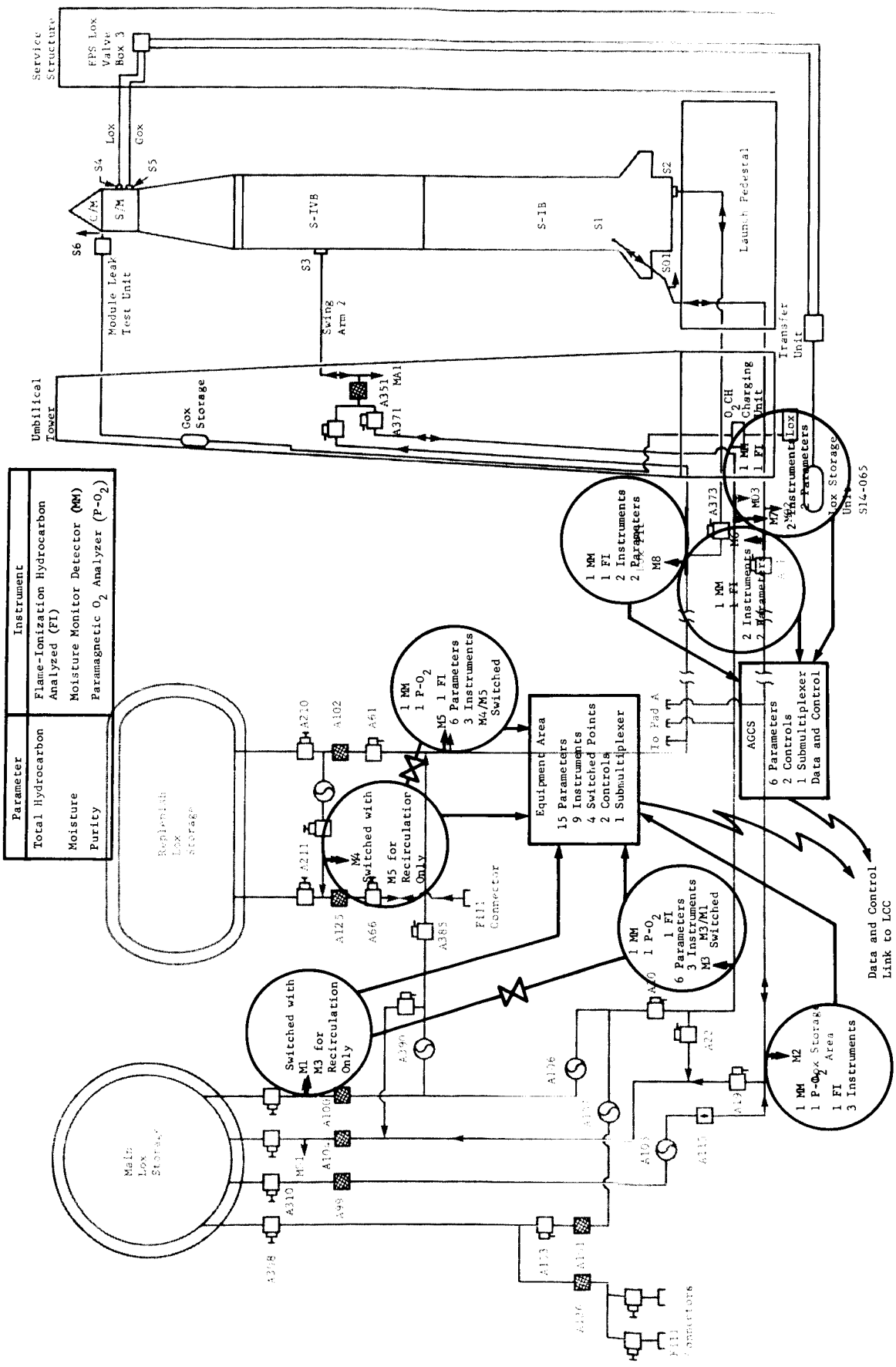

Fig. V-30 Data and Control Flow Diagram, Lox System, LC 37

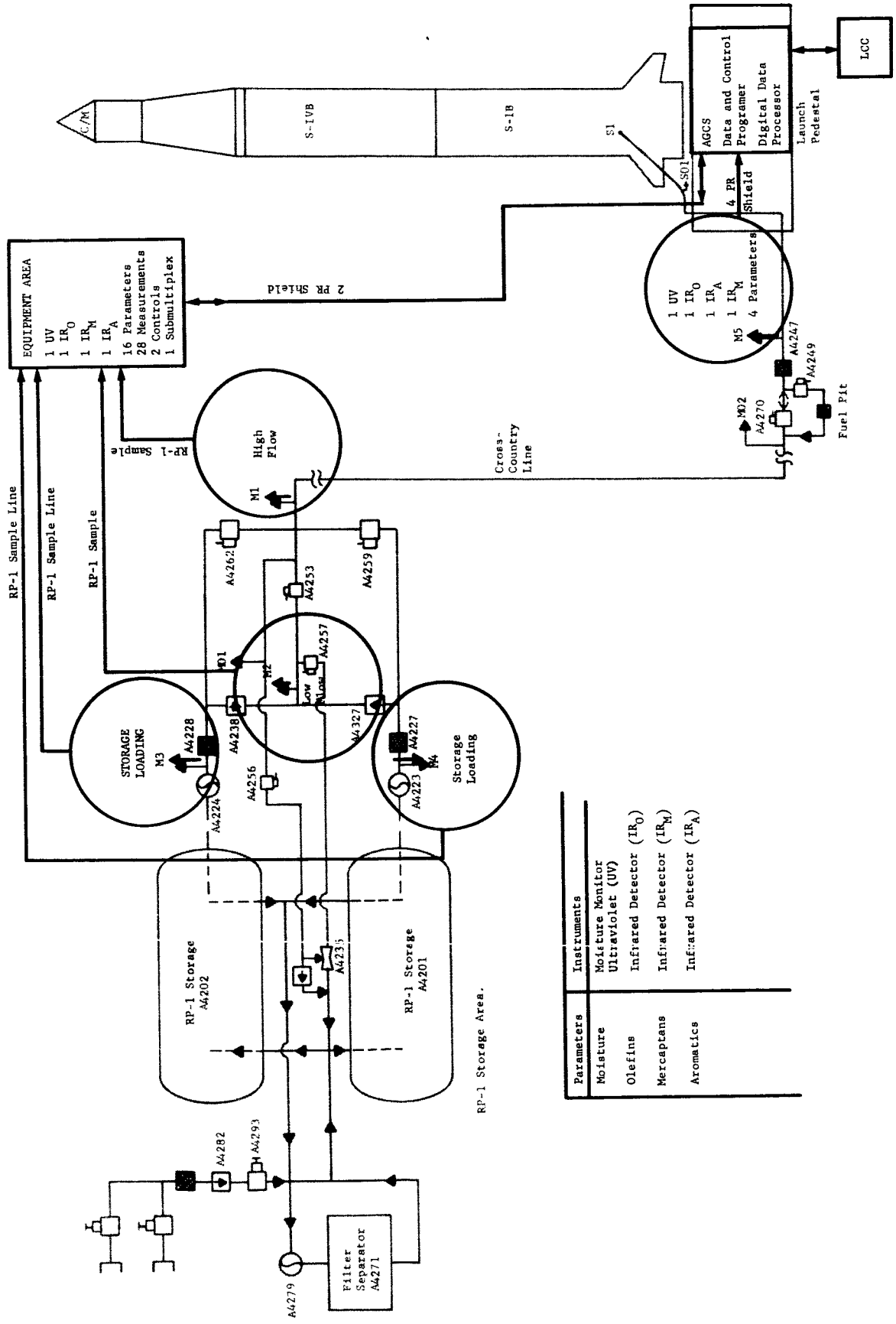

RP-1 Storage Area.

Parameters	Instruments
Moisture	Moisture Monitor Ultraviolet (UV)
Olefins	Infrared Detector (IR$_O$)
Mercaptans	Infrared Detector (IR$_M$)
Aromatics	Infrared Detector (IR$_A$)

Fig. V-31 Data and Control Flow Diagram, RP-1 Transfer System, LC 34

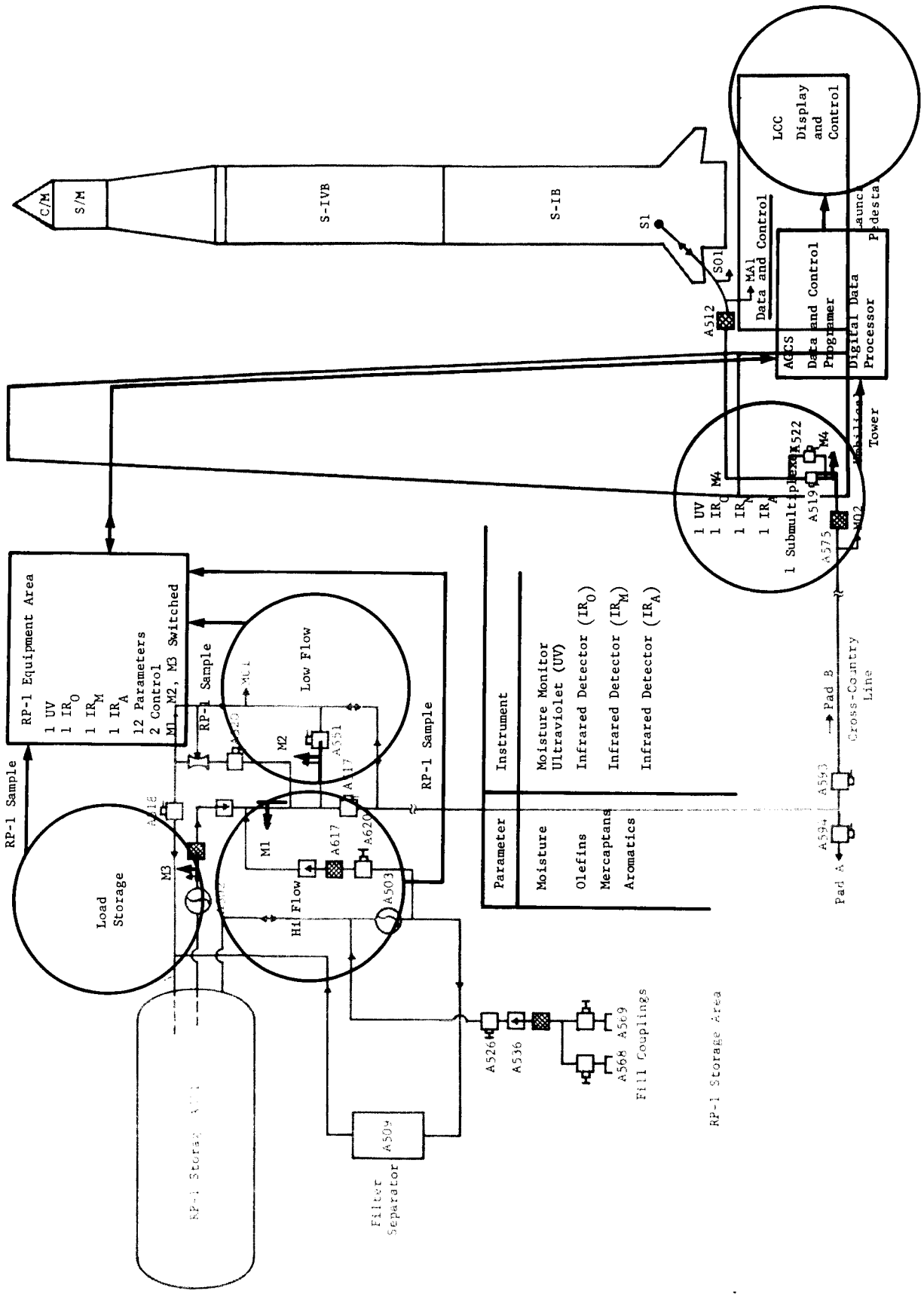

Fig. V-32 Data and Control Flow Diagram, RP-1 Transfer System, LC 37

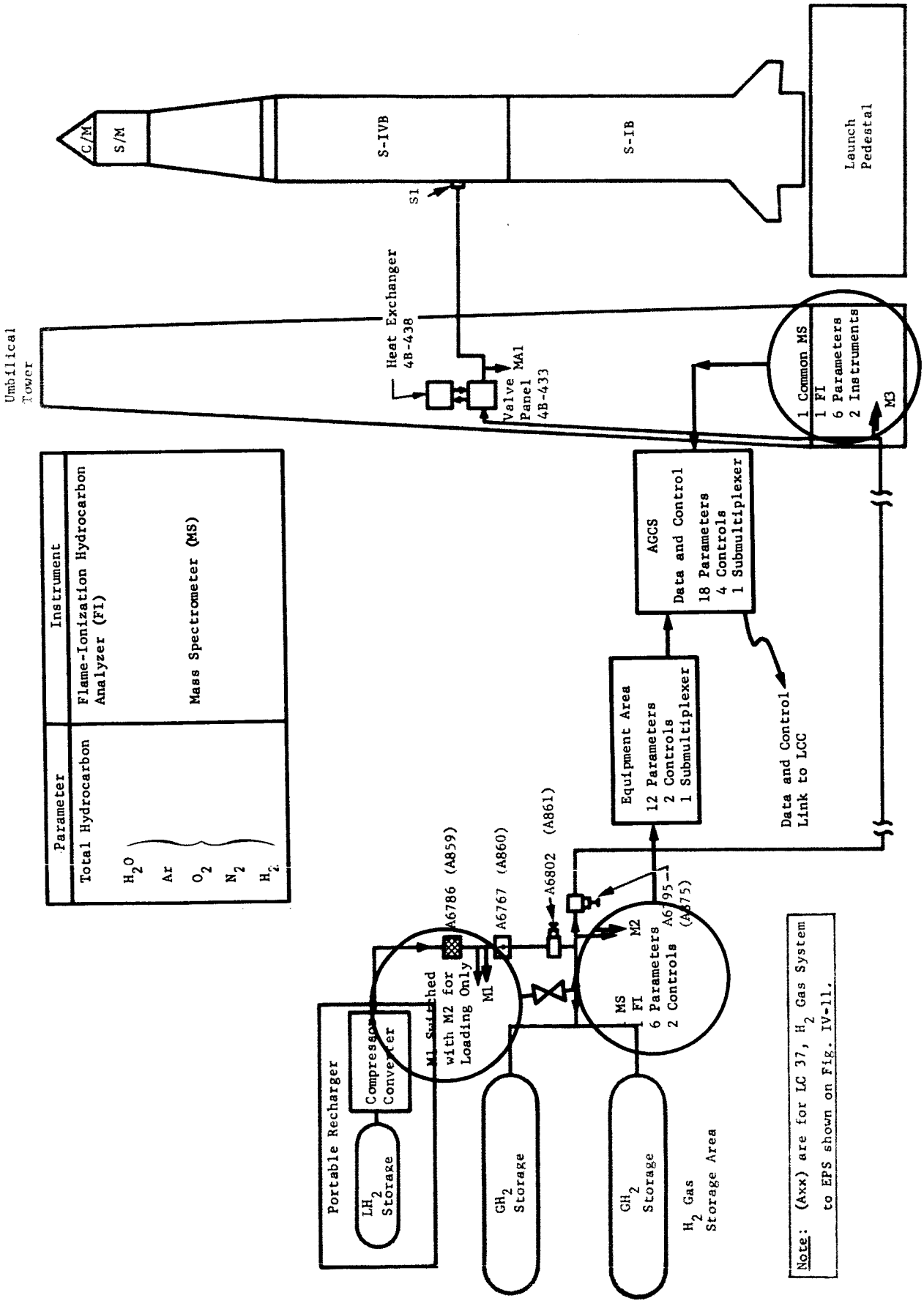

Fig. V-33 Data and Control Flow Diagram, GH_2 System, LC 34 and LC 37

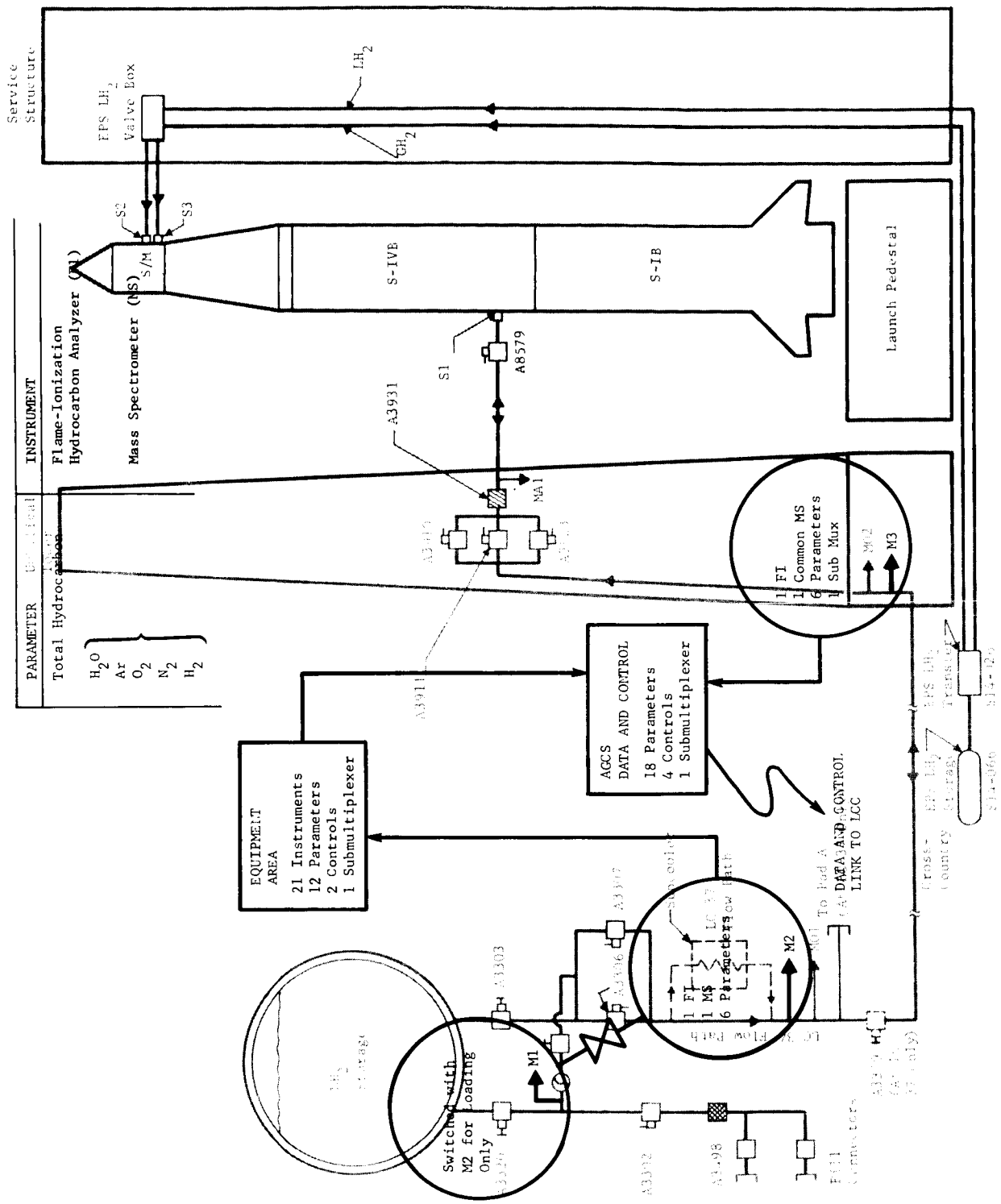

Fig. V-34 Data and Control Flow Diagram, LH2 System, LC 34 and LC 37

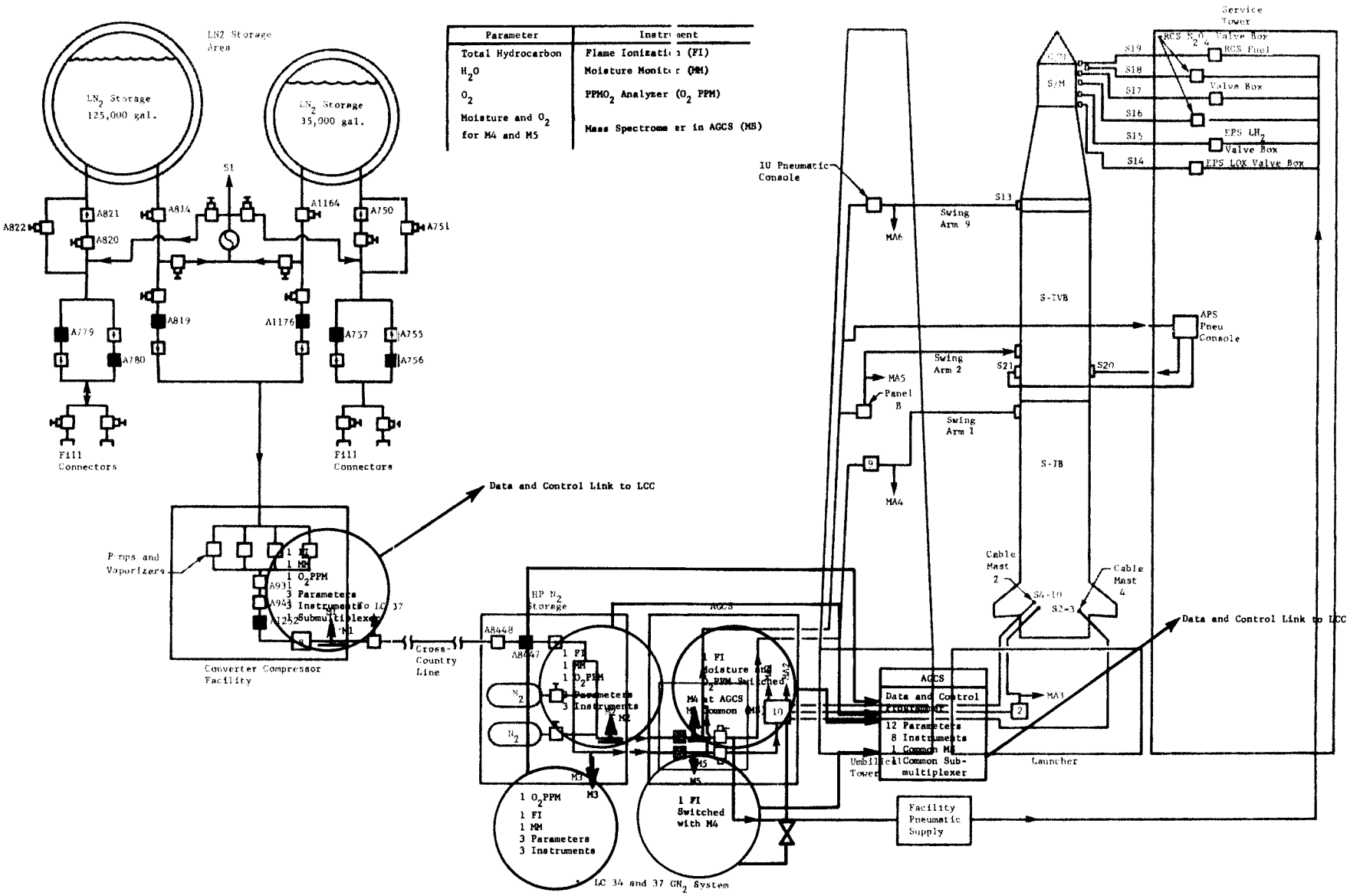

Parameter	Instrument
Total Hydrocarbon	Flame Ionization (FI)
H_2O	Moisture Monitor (MM)
O_2	PPMO_2 Analyzer (O_2 PPM)
Moisture and O_2 for M4 and M5	Mass Spectrometer in AGCS (MS)

Fig. V-35 Data and Control Flow Diagram, GN_2 System, LC 34 and 37

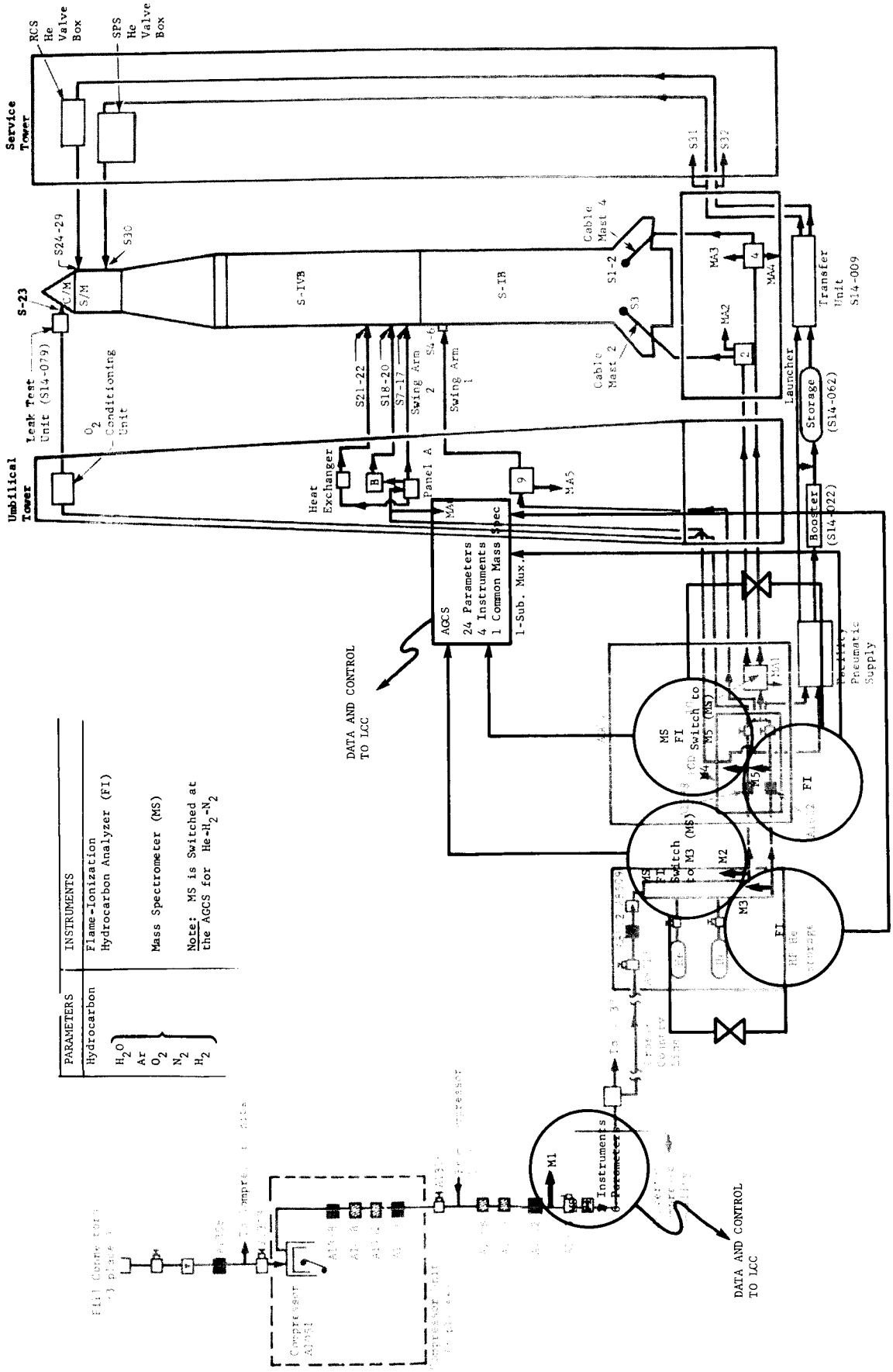

Fig. V-36 Data and Control Flow Diagram, Helium, LC 34 and 37

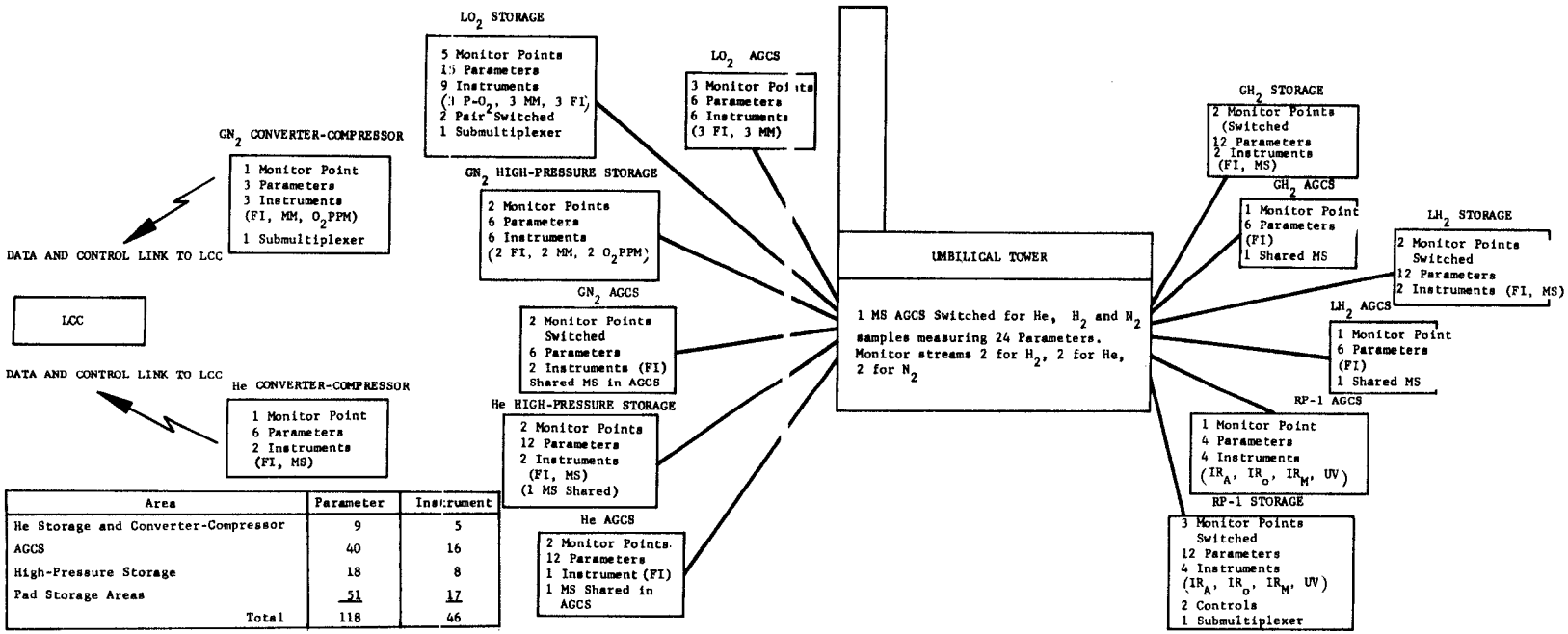

Area	Parameter	Instrument
He Storage and Converter-Compressor	9	5
AGCS	40	16
High-Pressure Storage	18	8
Pad Storage Areas	51	17
Total	118	46

Legend:

FI	Total Hydrocarbon Flame Ionization
MS	Mass Spectrometer
O_2PPM	Parts Per Million O_2 Analyzer
MM	Moisture Monitor
IR_A	Infrared Aeromatic Detector
IR_O	Infrared Olefin Detector
IR_M	Infrared Mercaptan Detector
UV	Ultraviolet Moisture Monitor
P-O_2	Paramagnetic O_2 Purity Analyzer

Fig. V-37 Summary of Proposed Instrumentation for Complexes 34 and 37

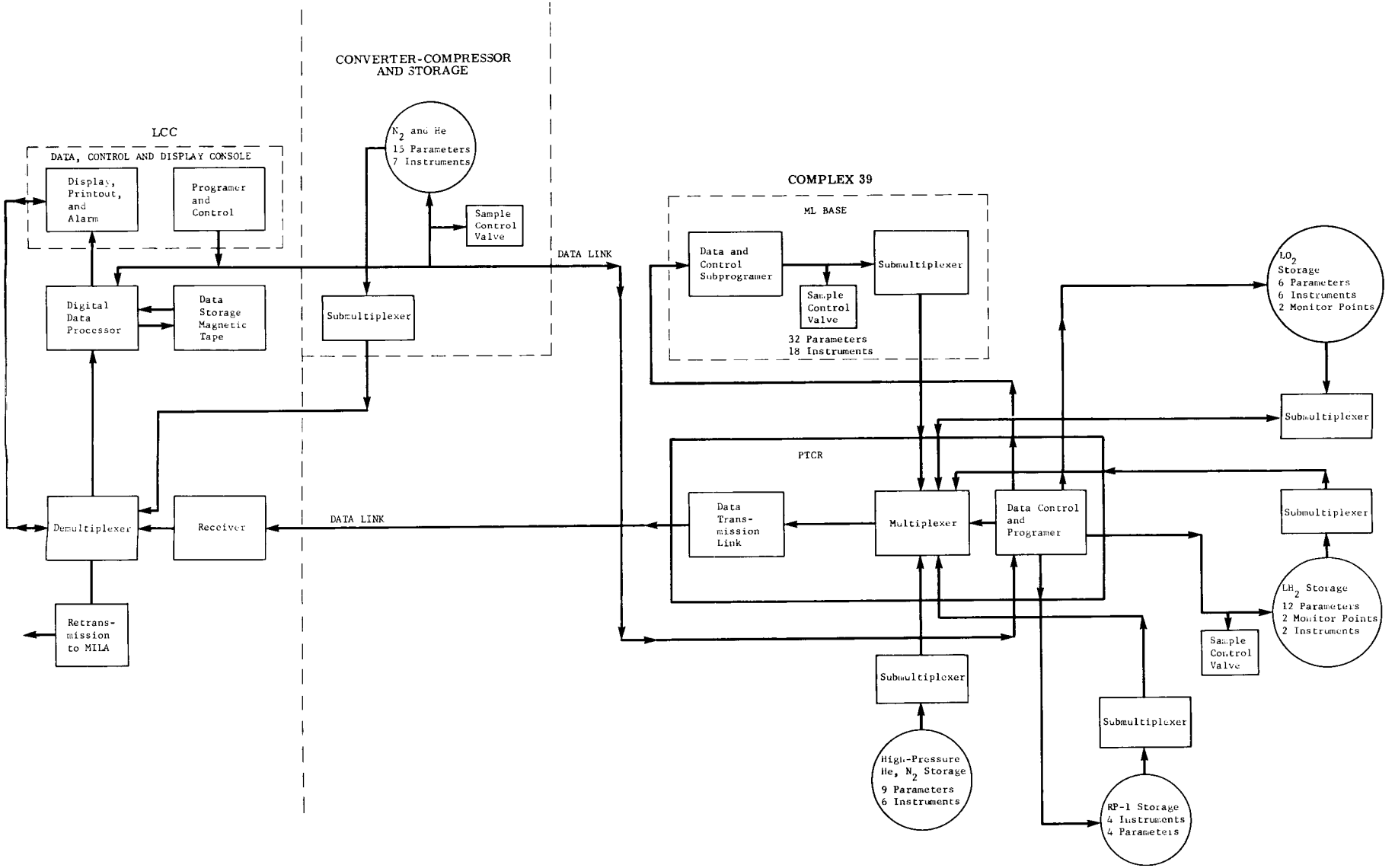

Fig. V-38 Contamination Instrumentation Data System for Complex 39

digital display indicating location of sensor and quantitative value of contaminant. The console will also have a digital printout that will print location, time, parameter, and quantitative value of contaminant. The printout will provide a permanent record of all out-of-tolerance readings. The printout and display receive their data from the digital data processor.

The digital data processor will contain storage of parameter limits and will compare the incoming data from the demultiplexer to provide alarm signals and data for the display and printout. The scaled data will be stored on digital tape and will be played back after the loading process for a quantitative summation by the data processor to determine the percentage of total contaminant. All continuation data will be stored on the tape. These data will then be obtainable at the printout and visual display.

The program and control will provide timing and command signals to the mass spectrometers, submultiplexers, and sampling control valves. The command signals will provide synchronization with the peak data outputs from the mass spectrometers and the submultiplexed sampling periods. The commands will also synchronize the switchable monitor points with the parameter data. The storage area submultiplex data will then be combined by the multiplexer at the PTCR and transmitted to the LCC via DTS.

Some expansion of the existing data-multiplexing system would be required. The present instruments will not require fast sampling time, as the sensor response times seldom exceed 1 sec. A multiplex system shall be used to keep cabling to a minimum. Complex 39 has a total of 82 parameters using 43 instruments. Complexes 34 and 37 will not differ greatly from Complex 39 other than the data links.

g. Cost Comparisons

The following prices include costs incurred by explosion-proofing and in otherwise making the instruments compatible to NASA specifications.

Paramagnetic Oxygen Analyzer - The only instrument suitable for the oxygen purity analysis is the Beckman Model G-2 paramagnetic oxygen analyzer. This instrument costs approximately $3900.

Total-Hydrocarbon Analyzer - The primary candidate for this instrument is the Beckman total-hydrocarbon analyzer. The Model 108A is suitable for use in nonhazardous areas and costs approximately $2600. The Model 106E proposed for use in hazardous areas costs approximately $3800, compared to the Bendix hydrocarbon analyzer for the same use at a cost of $5000.

Parts-Per-Million Trace Oxygen Analyzer - The primary candidate for this instrument is the Beckman Model 778. This instrument costs approximately $4000; the Bendix parts-per-million oxygen monitor also costs $4000.

Electrolytic Hygrometer - The primary candidate for this instrument is the Beckman electrolytic hygrometer with a rhodium electrode. This instrument costs approximately $2200, compared to a CEC moisture monitor at $2600 and the Bendix electrolytic hygrometer at $3000.

Process Gas Chromatographs - The Bendix high-speed gas chromatograph costs approximately $15,000 with a hydrogen flame detector attached. This instrument costs about $12,000 without the detector. The Melpar unit costs about $40,000 for the first unit, including master control panel. Subsequent units with master control panels would cost about $15,000 each. Additional units without control panels would cost about $10,000 each. Perkin-Elmer was unable to quote an approximate cost for one of their high-speed chromatographs. The Beckman Model 320-D process gas chromatograph that uses standard chromatographic techniques and equipment costs approximately $9500. The Bendix chromatograph has the advantage over the others, because it can perform very rapid analyses (15 sec to 2 minutes), and it is readily available with a minimum of developmental effort. The Beckman Model is a standard instrument that performs the analyses in 5 to 10 minutes. The Perkin-Elmer instrument needs considerable development.

Mass Spectrograph - The instrument propsed for use as a common mass spectrograph in the base of the ML or AGCS costs between $150,000 and $175,000. This instrument

would use standard off-the-shelf components. This instrument would cost an additional $500,000 for developmental effort if it were to use lightweight components. The mass spectrometers proposed for use in all the other areas cost approximately $25,000 each. CEC was the only instrument manufacturer that proposed use of the mass spectrograph.

Infrared and Ultraviolet Analyzers - The Perkin-Elmer miniature infrared and ultraviolet analyzers are the instruments proposed. These instruments cost between $3500 and $5000 depending on required development effort. Although MSA proposed infrared analyzers, the Perkin-Elmer model was recommended because of the obvious advantage offered by its very small size. MSA did not provide cost data for their equipment.

VI. RECOMMENDATIONS AND CONCLUSIONS

A. SAMPLING

A number of conclusions can be drawn from the data collected for this report:

1) Sampling for purity of cryogenic fluids is best accomplished by the use of the shielded-cup, totally vaporizing cryogenic sampler, in use at nearly all of the launch and test facilities surveyed. No advance in concept in this method is foreseen, except in obtaining more representative samples as described in this report;

2) Sampling for purity of the storable, ambient-liquid propellants, except RP-1, is best accomplished by the use of the cylindrical, double-valved, pressure containers, in use at nearly all of the launch and test facilities surveyed. The only well defined advance in concept is offered by remotely actuated samplers in cases where personnel are excluded, during sampling, for safety. This advancement will not be recommended until its need is established through analysis of the requirements of specific sampling points at Complexes 34, 37, and 39 at KSC. Another concept advance recommended in this report is automatic provisioning of ullage space during sampling;

3) Sampling of RP-1 for purity is best performed in glass or plastic bottles. No significant advancement in principle or practice is foreseen. Nearly all launch and test sites comply;

4) Sampling of gases for purity other than for moisture is best performed with the double-valved high-pressure vessels in use at most of the launch and test sites. The remainder use a single-valved container that is deficient in that it is impossible to flow-through purge the container before sampling. Remotely actuated samplers exist but will not be recommended unless their need is established, since remotely actuated devices complicate the reliability of the sampling operation;

5) Gases are best sampled for moisture with the electrolysis-type moisture indicator, plumbed directly to the sampling point as further defined in this report. No improvements in this method for sampling are foreseen or indicated.

It is concluded, also, that the state of the art permits smaller flow rates from combination purity-particulate sampling points, and that a significant improvement in safety will result from built-in flow limiting orifices at the sampling points. This is recommended, as are pressure-indication devices to allow use of these orifices for sample flow measurement.

Particle sampling, as practiced by all test and launch facilities surveyed, for all of the fluids studied, is concluded to be nonrepresentative, unsafe, insensitive, inaccurate, unnecessarily time-consuming, and slow in response.

Use of the Wyle DFS or the Maledco valve, use of flow-limiting orifices for high-pressure gas systems, and development of the in-line filter holder and counter are strongly recommended to bring sampling for particle content at Complexes 34, 37, and 39 up to the state of the art existent for purity sampling methods.

B. MONITORING

The following conclusions, pertinent to monitoring equipment, have resulted from the study:

1) The recommended concepts for detection and quantification of particulate contamination in the storable liquids and gases are collimated light occlusion, light scattering, and ultrasonic reflectance when, and if, the applicable criteria are changed to admit application of these concepts as explained previously herein;

2) Confirmation of application of the recommended concepts to storable liquids excepting RP-1 or exploration of application to the cryogens is not likely to occur unless it is funded;

3) For particles larger than 100μ, including fibers, the relationship between microscopic determination of the longest particle dimension, and that reported by the automatic counting devices, deteriorates with increasing particle size;

4) While a totally continuous contamination monitoring system is impossible to obtain at this time, there is a good system of instrumentation consistent with the state of the art that can provide very nearly a continuous system. Some instruments of this system are off-the-shelf items while others will require some development. However, a complete system is possible soon. The specific equipment recommended is the best available; there is very little hope that better equipment will be developed soon.

VII. RECOMMENDATIONS FOR FURTHER STUDIES

To efficiently apply the product of the existent study to the scope systems at KSC, this study should be continued in the next logical phase, which is a detailed analysis of the specific application of its recommendations to the specific optimum sampling points for those systems at KSC.

The space, weight, accessibility, safety-hazard, power consumption, data-transmission, operational fluid status and mode, mechanical interference, sampling system adaptation, sampling point location, countdown and operational schedule compatibility, display, recording, and corrective-action limitations and requirements should be investigated and cataloged for each intended sampling point, data transmission point, and display location. The location of each optimum sampling point should be defined together with a comprehensive justification, cognizant of and compatible with the operational schedules.

This study was oriented toward the equipment and method, the next phase should be oriented toward the specific system application. Only after this phase is completed and proves practical, should the subsequent logical breadboard design and prototype phases be developed for monitoring equipment. (Sampling equipment being more diverse in application for a given design may be programed for development before, or coincident with, this application survey.)

This study should provide a coherent, detailed, specific implementation plan for these complexes, compatible in every respect with NASA-KSC operational philosophies and procedures and with those of NASA program contractors.

The study assumed that existing NASA specifications would be used in determining parameters to be measured in any monitoring operation. Future efforts to more completely define the requirements should include a study of the need to measure specific parameters at the two principal monitoring points, with respect to the type of degradation that could realistically occur in the system. For example, liquid hydrogen is procured with a minimum concentration of 95% parahydrogen. Thermodynamic considerations dictate that this concentration can only increase during storage. Therefore, once it has been determined that at least 95% parahydrogen is delivered to the storage tank, no further checks on

this parameter are necessary. Similarly, if necessary, oxygen purity should be monitored at the upstream location. There is then no need to monitor it at the downstream location because, from a practical standpoint, purity cannot degrade significantly while the fluid flows through the transfer line. On the other hand, hydrocarbon content probably should be monitored at both locations.

At the time of the oral report midway through the study, it was recommended that the existing contamination control criteria specifications for particulates be converted to criteria that are oriented toward the area or light-scattering parameters, detected, quantified, and reported by the zone-sensing automatic particle counters available or conceptual today.

This recommendation remains one of the most pertinent and potentially fruitful that this study team can make to NASA-KSC to improve the art of operational fluid system contamination control.

It is recommended that a comprehensive, uniform, contamination-control-criteria specification document be prepared for all of the program system operational fluids and systems (both fluid and hardware criteria) for distribution to all NASA organizations and contractors. This document should provide for a logical progression of criteria from detail parts at component manufacturers' facilities, and from the vendor transports for the fluids, to the airborne systems.

This recommendation is based on surveys pertinent to this study; on usage of this type of document by Martin Company throughout three generations of operational vehicles for military usage, and for the Gemini program; and on requests for this type of document from other military aerospace contractors, and NASA organizations and contractors.

Such a centralization of criteria specifications eliminates duplication, and incompatibility generated spontaneously by the various interested divisions. It promotes completeness and integrity of an overall contamination control program.

It is recommended that a sampling manual be prepared that identifies sampling points and frequency (both by time interval and by sequence relation to system operation).

This recommendation is based on surveys pertinent to this study and on Martin Company's use of this type of document for several years at the static test and at the launch facilities.

On this latter basis, it is asserted that this document will promote uniformity of procedure throughout the Saturn program and will assure that a comprehensive, integrated program of contamination control of the systems at KSC will be maintained.

This comprehensive sampling document is used in those sections of systems test and operational procedures pertaining to verification of contamination control as the handbook for incorporation of its requirements into the step-by-step checkoff procedure for wet test and launch operations.

It controls the implementation of contamination control throughout the vehicle production, test, and flight programs in the same fashion that the integrated contamination control criteria document, recommended in the previous paragraph, controls the uniformity of acceptance criteria throughout the programs.

VIII. BIBLIOGRAPHY AND REFERENCES

A. ANNOTATED BIBLIOGRAPHY

As a part of the overall study, available literature on contamination control was surveyed. This literature included information on contamination control in propellants from the MSFC IBM 7010 computer (problem 3-1014), obtained from the Scientific Information Center of Redstone Arsenal. Approximately 160 references were cited. Copies were obtained of those articles whose titles identified them as being of possible interest to the study.

Although an annotated bibliography was not a specific requirement of the contract, much of the information obtained in the literature survey is deemed pertinent to the study, and serves as the basis for some of the conclusions and recommendations. Accordingly, it was deemed advisable that summaries of the pertinent literature reviewed be presented as a part of the final report for the study. These summaries were extracted from the literature, with additional information presented to provide a clear, concise summary.

Adrian, R. C. and H. C. Edgington: Prototype Propellant - Testing Systems, Phases I and II - Feasibility Study and Preliminary Design. RTD-TDR-63-3. Aerojet-General Corp, Azusa, California, February 1963.

This report covers Phases I and II of a program to develop a prototype propellant-testing system that would make possible the preparation of contaminated propellant for laboratory examination and analysis under dynamic systems. Phase I consisted of a feasibility study and Phase II consisted of the development of design considerations for the propellant-test system and contaminant-addition system.

The purpose of the work in Phase I was to determine the feasibility of the prototype-propellant-test-system concept. Specific areas of study were the tank, transfer, and test systems; on-stream analyzers; and the contaminant-addition system. As much as possible, it was the goal of the study to incorporate commercially available components into the test system.

A system compatible with liquid oxygen, liquid hydrogen, liquid fluorine, hydrazine, nitrogen tetroxide, pentaborane, tetrafluorohydrazine, hydrogen peroxide, and chlorine trifluoride was considered. The system is adaptable for material compatibility studies and flow filtrations, as well as a variety of analyses.

It also can perform tests that include, but are not limited to, the use of rapid-scanning infrared absorption, ultraviolet absorption, RF spectroscopy, activation analysis, conductivity measurements, and photographic observation. The general test parameters of the system include propellant temperatures from -420 to +200°F, a pressure range from vacuum (a few microns of mercury) to 215 psig, and a flow rate range from 5 to 150 gpm through the test section.

Compatible materials of construction are incorporated in the entire system. A generalized study was made of a contaminant-addition system capable of providing propellant containing known amounts of contaminants. The contaminants to be added include, but are not limited to, gaseous or liquid methane (15 to 3000 ppm), gaseous or liquid nitrogen (160 to 5000 ppm), gaseous carbon dioxide (10 to 5000 ppm), water vapor (10 to 50 ppm), liquid water (10 to 1000 ppm), flake iron oxide (1 to 50 mg/gal.), and specially sized silicon dioxide (1 to 50 mg/gal.).

Phase II, in which assembly and flow diagrams, and initial drawings of the propellant test system were prepared, was based on the Phase I feasibility study.

Phase III was to include the construction of a prototype system, but it is not known whether this phase was ever accomplished.

Anduze, R. A. and J. C. Harris: Methods for Particle Counting in Hydraulic Fluids. ML-TDR-64-72. Monsanto Research Corp, Dayton, Ohio, May 1964.

This report discusses a study sponsored by the Air Force Materials Laboratory at Wright-Patterson AFB concerning the use of automatic particle counters for determination of particulate contamination in hydraulic fluids. Under this study, Anduze and Harris evaluated three automatic particle counters. One was the Cintel Flying Spot particle resolver manufactured by Cinema Television Co, Ltd, London, England. This instrument converts two-dimensional density distribution into a varying voltage-time relationship. An intense light spot slowly scanning a cathode-ray tube is passed through the optical system of a conventional microscope. The "imaged down" light spot scans a fixed microscopic field. The transmitted-spot intensity alteration as received by a photomultiplier is amplified, counted, and monitored. Particles are sized by pulsewidth selection.

This instrument requires filtration through a membrane in accordance with ARP 598. The filter membrane is rendered transparent by placing it on top of several drops of immersion oil. For spherical particles, the instrument gives satisfactory results. For irregularly shaped particles, especially where the ratio of longest dimension to shortest dimension is over five, the instrument gives erratic results. This is because the instrument responds to differences in light transmission, and this factor can be affected by particle orientation when the particles are irregular in shape.

The second particle-counting device evaluated was the Coulter counter, Model A, manufactured by Coulter Electronics, Inc, Chicago, Illinois. This instrument counts and sizes particles by using the change in solvent resistance that occurs when a particle suspended in a conducting medium passes between two electrodes. This is done by drawing a suspension of particles in an electrolyte through a small aperture having an immersed electrode on either side. As each particle traverses the aperture, it momentarily changes the resistance of the liquid between the electrodes, producing a voltage pulse of magnitude proportional to the size of the particle.

This technique for counting particles in hydraulic fluid requires that the liquid measured be sufficiently conductive. Coulter recommends a mixture of 1.5 parts isopropanol (4% in NH_4 CNS), 1.5 parts 1, 2 - dichloroethane, and 1.0 part MIL-H-5606A.

The third particle-counting device evaluated was the HIAC automatic particle counter, Model PC203, manufactured by High Accuracy Products Corp, Claremont, California. This instrument uses the light-blocking tendencies of a dynamic particle as a direct indication of its size. The sample of fluid to be analyzed is forced through a passage, past a window. A light beam is collimated by the window and directed through the fluid stream to impinge on a phototube on the opposite side. Any foreign particle passing the window interrupts a portion of the light beam, causing a change in the output signal from the phototube. This signal change is amplified and converted into a count and sizing of particles through electronic circuitry.

As a part of the investigation, 12 samples of various hydraulic oils were counted via light microscope (ARP-598) and HIAC counter. Five samples of MIL-H-5606A also were counted by the Coulter counter. These tests show that the total counts by either method agreed fairly well. However, the agreement within any one size range was not good.

Calongne, A. B. and J. P. Morris: New Techniques for Testing Trace Hydrocarbon Contamination of Gases. Boeing Company, Launch Systems Branch, Aerospace Division, Seattle, Washington.

This report presents techniques for analysis of total and nonvolatile hydrocarbons in gases. Total hydrocarbon content is the total quantity of hydrocarbons in a gas. This includes all types and classes of hydrocarbons. The condensable hydrocarbon content and oil content of a gas are used interchangeably. They are defined as the quantity of hydrocarbons absorbed by a specified solvent when the test gas is bubbled through it in a specified manner and when the solvent is prepared and analyzed by a special procedure. Therefore, only the higher boiling point hydrocarbons are detected. Nonvolatile residue content pertains only to the residue remaining after a liquid is evaporated.

Two methods of analysis are used for total condensable hydrocarbons and total hydrocarbons. These are:

1) Gas scrubber-infrared spectrophotometry - This method relies on the use of a full halogenated solvent to remove hydrocarbons from the sampled gas. It is effective for most high-boiling hydrocarbons. It is ineffective for the collection of hydrocarbons with boiling points below that of the collection media and is, therefore, limited to analysis of condensable hydrocarbons. The actual analysis uses infrared spectrophotometry. The operation depends on the absorption of specific wavelengths of infrared radiation by certain covalent bonds. Carbon-hydrogen bonds absorb in the region of 3.0 to 3.6 μ, the strongest peak usually appearing at 3.42 μ;

2) Flame ionization - All flame ionization units consist of a high-temperature flame (usually hydrogen-oxygen) in which the sample gas is injected. The heat causes gas ionization, producing negatively charged carbon atoms in the sample, and these are attracted to a positively-charged grid, thus creating an electrical current that is directly proportional to the number of ionized carbon atoms.

Advantages of the flame-ionization method over the gas scrubber-infrared spectrophotometric method are:

1) Analyses can be performed in about 3 minutes compared to 1 to 5 hr for the infrared method;

2) The method is accurate and is sensitive to gases, liquids, and solids;

3) Volatile and nonvolatile hydrocarbons are analyzed together;

4) Flame-ionization units are easily adaptable for on-stream recording applications.

Disadvantages of this method compared to the infrared technique are:

1) Large concentrations of halogenated vapors interfere, whereas they do not affect infrared analysis;

2) A wide range of calibration and zero gases must be kept on hand;

3) Flame ionization is accurate only when detecting aliphatic hydrocarbons.

Gas chromatography for total condensable hydrocarbons and total hydrocarbons is undesirable because of the high selectivity for specific hydrocarbons.

Gas infrared-absorption cells in conjunction with infrared analysis cannot be used if liquid hydrocarbons (i.e., hydrocarbon droplets) are present. Therefore, the use of gas cells for total and condensable hydrocarbons is not generally feasible.

Churchill, A. V.: "Junk in the JP-4." Aerospace Safety, Vol 19, December 1963, p 7 thru 11.

Integral fuel tank corrosion and other operational problems have been associated with contamination in jet fuels (i.e., water, particulate matter, surfactants, and microorganisms). Among the factors affecting growth of microorganisms are increased fuel temperatures, pH of the water bottoms, nutrient salts in water bottoms, surfactant contamination, various fuel additives, and, possibly, polysulfide sealing and topcoating materials.

Research programs to date have been mainly concerned with the elimination or reduction of the various contaminants in fuel systems through proper maintenance and good fuel-handling procedures. Alternative approaches involve the use of suitable additives, both water- and fuel-soluble to mitigate the damage potential of the contaminants. Among the additives is potassium dichromate, which is effective in killing or controlling microorganisms in water bottoms.

Digman, W. J.: "Fuel Contamination." Aerospace Maintenance, Vol 18, August 1963, p 3 thru 13.

This report discusses contamination in jet aircraft fuels. The fuels used in jet engines have characteristics quite different from those of aviation gasoline. Jet fuels are heavier and have higher viscosities and a lower interfacial tension than aviation gasoline. Thus, jet fuels carry more fine particles of rust, water, and other foreign material in suspension for longer times.

Contaminants that can adversely affect turbine fuel systems can be grouped as follows:

1) Particulate matter - Iron rust and scale, sand and airborne dirt;

2) Water;

3) Surfactants - Naturally occurring byproducts of refinery processing, residual refinery-treating materials, oxidation products, or materials deliberately added for specific purposes. Examples are sodium sulfonate and sodium napthanate;

4) Microorganisms - Bacteria and fungi. Turbine fuel contaminants can cause,

   a) Abrasion and wear of fuel system components,

   b) Water and icing,

   c) Microbiological contamination and fuel probe malfunctions,

   d) Corrosion of aircraft fuel systems.

Contamination control in jet fuels involves stringent quality control, particularly regular maintenance of filters, water separators, and storage tanks. Emphasis should be placed on improving fuel-handling practices and, where necessary, incorporating special methods to ensure contaminant removal. Fuel-handling practices that expose fuels to water should be strictly prohibited, thereby minimizing the possibility of water and microorganism contamination. Contamination analysis should be conducted at frequent intervals to determine the degree and type of contamination in the fuel.

Dutch, P. H.: Summary Report on Particulate Matter Analysis. AFFTC-TR-60-46 (ASTIA No. AD 243249). The Fluor Corporation, Ltd, Los Angeles, California, September 1960.

The purpose of the project discussed in this report was to develop procedures for the identification of particles found in fluid fuel systems at Edwards AFB. A literature survey was conducted to discover existing methods for the identification of particles likely to be found in these systems. As a result of this survey, visual microscopy, physical identification methods, spot testing, chemical microscopy, and fiber staining were selected as the most suitable procedures for the identification of complex particle mixtures.

The basic approach was to evaluate the suitability of existing methods for the identification of particle mixtures containing the following groups of components:

1) Aluminum, chromium, copper, iron, magnesium, molybdenum, nickel, potassium, and silver;

2) Talc and mica;

3) Cotton, rayon, orlon, dacron, nylon, and wool;

4) Rubber, halogenated rubbers and plastics, asbestos, and polyethylene.

Wherever necessary, new methods were developed and combined with the selected, existing procedures, to evolve an analytical scheme applicable to routine analysis of relatively simple mixtures and complete analysis of complex, multicomponent mixtures. The scheme was tested and found workable with known particle

mixtures in the Fluor laboratories, and with several unknown mixtures during a training period at Edwards AFB. The procedures were organized into a laboratory manual, which contains detailed instructions for routine and complex analyses. A laboratory kit was assembled as a supplement to the manual.

A method for identifying particle mixtures on millipore filters without removal of the particles was developed. This method is suitable for identifying mixtures containing metals, alloys, and certain metal salts only. Perfection of this method to include other materials will require additional work.

It is believed that the information presented in this report and in the laboratory manual is sufficiently complete and detailed to enable relatively inexperienced analysts to perform all analyses required for the identification of the particulate materials specified in the contract.

Ent, W. L.: Sampling and Analysis of Liquid Oxygen. (ASTIA No. 253232). Air Products, Inc, Allentown, Pennsylvania, July 1960.

This report discusses the sampling techniques and analytical methods that have been used in the production and use of liquid oxygen. The sampling techniques and analytical methods meet the requirements of several different aspects of the problem, such as monitoring for oxygen purity, maintenance of combustibles below dangerous concentration levels, control of soluble contaminants, and control of suspended or contained solids.

The most accurate, sensitive, and reliable sampling and analytical techniques are recommended. The recommended techniques cover purity, total hydrocarbon, carbon dioxide, acetylene, water, and particulates for both production streams, and liquid in storage.

The sampling techniques discussed in the report are:

1) Collection of liquid in a dewar - This involves opening of a sampling valve on a container to permit liquid sample flow into a dewar. The sample must subsequently be vaporized for most analytical procedures;

2) Product-container vapor analysis - This method usually consists of obtaining a sample from the vapor space above the liquid in a product container. The vapor sample is sometimes obtained from the vapor space above the liquid sample collected by method 1);

3) Liquid lance-vaporization - This method consists of inserting a tube into the liquid in a product tank, or into the liquid sample in a dewar collected as in method 1). Vaporization occurs within the lance and tubing attached to its distal end so that a vapor sample is procured from the tubing at the distal end;

4) Trapped liquid-vaporization - Trapping of liquid in a high-pressure container for subsequent vaporization can be accomplished in several ways,

   a) Pouring into warm cylinder - A small amount of liquid sample, obtained by method 1), is poured into a high-pressure cylinder. The opening is closed with a screw-type plug and the liquid is allowed to vaporize forming a high-pressure gas sample,

   b) Pouring into cold cylinder - This method is similar to the one above, but in this case the cylinder is immersed in a large dewar containing liquid nitrogen or oxygen that cools the container to prevent excessive vaporization of the liquid sample as the liquid is added,

   c) Pouring into temporary container - This variation consists of pouring the liquid, collected by method 1), into a small noninsulated container such as a beaker or Erlenmeyer flask, which is then placed on a flat flange and covered with a bell-jar vessel that is bolted to the flange. The liquid vaporizes to a high-pressure gaseous sample,

   d) Alameda NAS method - A measured amount of liquid is trapped in a small cylinder fastened inside a high-pressure cylinder near the top of a large opening. The small cylinder is cooled by the

liquid being poured until it is filled to the height of small holes around its circumference. These holes allow the liquid to vaporize into the large container when the opening is closed with a screw cap,

e) Douglas method - A short section of high-pressure stainless steel pipe is valved at each end and fitted with a tee connection in its center. This tee leads through another valve to a larger, high-pressure container or tank. Liquid is purged through the short, high-pressure section of pipe, until the pipe is presumed to be filled with liquid. This section is then valved off and the trapped sample is allowed to pressurize through the tee and valve into the high-pressure vapor container;

f) Air products method - A cup is fastened within a larger container as in the Alameda NAS method. Liquid entering the cup is controlled by a valve that allows flow into the cup and out into the large vapor container. The initial gas and liquid entering the container is purged through a valve on the upper side of the high-pressure container. The liquid eventually overflows the inside cup and fills the high-pressure container to the level of the side valve. At this point, the inlet valve and side valve are closed, the bottom valve is opened, and all the liquid that is not in the cup drains quickly. The bottom valve is then closed, allowing the trapped liquid to vaporize to a high-pressure gas sample;

5) Line tap-coil vaporization - A flush-mounted tap is fixed to the process-stream line. Fluid flowing through the tap is vaporized and warmed in a coil or long line within the cold box. This line terminates outside the cold box at a valve that leads to the analytical device;

6) Pilot tube line tap-coil vaporization - This is similar to method 5), but the tap at the process stream line is inserted into the line with the opening pointed in the reverse direction of flow;

7) Heat-exchange, condensation, and vaporization - A sample is procured from the process stream line as in method 5), passing directly into the tube of a single-tube exchanger, the shell side of which contains a colder cryogenic liquid to condense any gas that might be present in the process stream. The tube liquid (sample) is routed outside the cold box to a flash evaporator (steam or electric) that converts the liquid to a vapor sample.

Methods discussed for the determination of purity in oxygen are the Orsat method (±0.05 mol% oxygen), paramagnetic analysis (±0.1 mol% oxygen), and thermal conductivity (±0.1 mol% oxygen). Methods discussed for the determination of impurities are dispersive infrared spectrophotometry, nondispersive infrared spectrophotometry, catalytic combustion in conjunction with nondispersive infrared (the Air Products total-hydrocarbon analyzer), vapor phase chromatography, and mass spectrometry. Colorimetric methods for acetylene and the flame ionization principle are discussed. Water determination methods, including the electrolytic hygrometer, are also discussed.

Recommendations made in the report are:

1) Purity analyses should be performed continuously at the generating plant on the liquid oxygen from the bottom of the low-pressure column (reboiler or condenser), using a continuous-monitoring thermal conductivity or paramagnetic analyzer. The liquid sample should be vaporized to a gas for these analyses either by the line tap-coil vaporization technique or with a separator-vaporizer;

2) Total-hydrocarbon and carbon dioxide analyses should also be performed continuously on the product from the plant as removed from the bottom of the low-pressure column, reboiler, or condenser. The liquid sample should be vaporized through the use of a separator-vaporizer technique, wherein it is assured that no concentration of these warm boiling contaminants can take place due to preliminary partial

vaporization or fractionation. These analyses should be accomplished with a Luft principle (nondispersive) infrared analyzer sensitized for carbon dioxide in conjunction with a catalyst furnace for the conversion of the soluble hydrocarbons to carbon dioxide;

3) Stored liquid from the plant storage facilities and any other subsequent storage areas should be analyzed periodically to determine contaminant concentration due to vaporization, and loss of purity due to contamination in transfer and handling. A representative liquid sample can be obtained from a storage tank only when the liquid within the tank is well mixed immediately after filling, draining, pumping, etc. The sample should be obtained by a trapped liquid vaporization technique that prevents atmospheric contamination and prevents the higher-boiling contaminants in the liquid from concentrating due to vaporization. Analyses for total hydrocarbon, carbon dioxide, water vapor, and purity can then be performed with the equipment used for monitoring the generating plant product stream.

The remaining analyses required on the stored liquid would be for particulate count and acetylene determination. These analyses should also be performed periodically on the liquid in a well mixed storage facility. The most reproducible particulate matter data would be obtained by using the gravimetric technique wherein the particles contained in a certain volume of liquid are weighed after being filtered and are reported as a weight of particulate matter per standard volume.

Foster, R. H.: Study of Liquid Oxygen Contamination, Final Report. SSD-TDR-62-8. (ASTIA No. 272377). Air Products, Inc, Allentown, Pennsylvania, May 1961.

This report presents an excellent comprehensive summary of an extensive program conducted by Air Products and Chemicals, Inc, to investigate the significance of contaminants in liquid oxygen, and the sources and degree of contamination, and, on the basis of these findings, to establish design criteria and recommended procurement and use limit specifications for the missile liquid oxygen. This study involved a background survey intended to identify the various soluble and insoluble contaminants found in liquid oxygen, and their compatibility with liquid oxygen and with each other under the environments encountered in liquid oxygen systems.

Sources of contamination, factors relating to contamination prevention, solubility of each contaminant in oxygen, lower explosive limits for flammable contaminants, and general important physical and useful constants of oxygen in all contaminants as related to each other were investigated. These data were correlated and used to determine practicable tolerable limits for production and use for missile oxygen. Inasmuch as the problems of sampling and analyzing for impurities in liquid oxygen are difficult and realistic specifications for liquid oxygen require the selection of both sampling methods and analytical techniques suitable to fulfill the requirements, a study of detection and analysis methods was included. It involved a review of sampling procedures and devices, as well as laboratory and field analytical procedures and equipment.

Phase II of the program involved review of the hardware and production system design concepts and the recommendation of factors relating to these concepts that would reduce or minimize contamination, and facilitate inspection and cleaning, and increase operational study.

Phase III involved recommendations of definitive specifications of procurement storage, load limits, or end use limits for missile liquid oxygen, including necessary quality control procedures.

The program was expanded to investigate the sources and mechanisms for ignition of contaminated missile liquid oxygen, and included experimental programs to verify existing data in this field. Such variables as charge buildup rate, system geometry, and dynamics of the phenomenon of static electricity in liquid oxygen systems were considered. The possible effects of the existence of solid carbon dioxide in the missile fuel oxidant were considered and the factors relating to solid contaminants particularly solid carbon dioxide were determined. This involved determining the factors relating to the agglomeration of small crystals or particles of insoluble contaminants, such as carbon dioxide and the heavier hydrocarbons, determining their effect on oxygen systems, and recommending limits for operating conditions. Proper operational conditions to reduce or eliminate the solid contaminants were also recommended.

Phase VI of the expanded program included development of uniform cleanliness standards for oxygen equipment, development and recommendation of suitable means of inspection and surveillance of liquid oxygen systems to assure proper cleanliness, a study of contamination removal from liquid oxygen at the storage site, and the recommendation of such techniques to reduce the disposal of contaminated oxygen and reduce the need for stringent cleaning requirements of oxygen systems.

Phase VII of the program involved the production of three chapters for the liquid propellant safety manual covering safe handling procedures for high-pressure gaseous oxygen, nitrogen, and helium.

A continuous sampling and analyzing program used the Air Products sampler at Cape Canaveral and the newly developed multi-contaminant analyzer at the Research and Development Center at Emmaus, Pennsylvania.

The report provides background information concerning the allowable limits for impurities in liquid oxygen specifications, and methods for maintaining cleanliness in liquid oxygen systems. The information presented is not of direct use in the study, although all personnel concerned with any phase of liquid oxygen handling (from preparing specifications and procedures to performing operations with liquid oxygen) should be familiar with its contents.

Gayle, J. B. and J. O. Romine: Studies on the Reliability of Particulate Contamination Analyses. MTP-P and VE-M-62-5. NASA-MSFC, Huntsville, Alabama, 6 March 1962.

Selected factors influencing the reliability of particulate contamination analyses were investigated. These include the method of purging the sample valves and the type of microscope used. Also, the inherent variability of the test method and the variations introduced during the sampling and testing operations were considered. Estimates of the standard deviations of particle counts are given for samples taken from a typical ground service hydraulic system. These vary with the number of particles counted and range from approximately 30% for very high counts to 50% for very low counts.

Gayle, J. B. et al.: "An Evaluation of the Sperry Ultrasonic Particle Counter." Journal of the American Association for Contamination Control, Vol III, No. 9, October 1963, p 1 thru 6.

Gayle, J. B. and W. A. Riehl: Evaluation of the Sperry Ultrasonic Particle Counter. MTP-P & VE-M-62-8, NASA-MSFC, Huntsville, Alabama, 8 May 1962.

The ultrasonic particle-counting instrument was designed and built by Sperry Products Co. and uses the principle of ultrasonic wave diffraction and reflection.

A transducer (Li_2 SO_4 search unit) generates a short-duration 5.0-mc ultrasonic pulse into a stream of the fluid being analyzed. If a particle is in the path of the energy, a portion of the energy, proportional to the size of the particle it strikes, is reflected. This reflected energy is picked up by the same transducer, and, by electronic circuitry, eventually produces a count of the particles in the liquid, the count being registered on one of four electronic counters.

The ultrasonic counter was evaluated to determine its suitability for inline monitoring of continuously operating hydraulic systems. The investigation was carried out by circulating MIL-H-5606 hydraulic fluid, to which AC fine dust had been added in varying concentrations, through a laboratory hydraulic system operating at a pressure of approximately 50 psi and a temperature of 70°F. Size ranges studied were 10 to 25, 25 to 50, 50 to 100, and >100μ and fibers.

These were run through the test cell at flow rates of 350, 450, 550, and 650 ml/min. A minimum of 100 10-sec counts were taken at 20-sec intervals with an automatic timer.

It was found that the counter was capable of discriminating between different SAE levels of contamination and that the counts have a satisfactory degree of precision and are unaffected by moderate variations in flow rates. However, the counts obtained by the counter did not agree well with the values obtained by the light-microscope method of ARP 598 for each sample, although it was possible to relate the two sets of values by a third-degree (cubic) equation.

The evaluation indicates that this type of instrument can give good reproducibility for contamination analyses for particle sizes within the range of instrument capabilities. However, the results show that existing criteria, defined in terms of the longest particle dimension as measured by the light-microscope method, would have to be modified to permit use of such an instrument, or it would be necessary to develop correlations for specific particle sizes in specific fluids, relating the ultrasonic particle readouts to values obtained by the light-microscope method.

Gordon, E. S.: Improvements in Particle Analysis Equipment. IITRI No. E6012-11. Illinois Institute of Technology Research Institute, Chicago, Illinois, 8 September 1965.

The Royco Model PC-200A aerosol particle counter was extensively modified by the Illinois Institute of Technology Research Institute to improve its accuracy and sampling capability for monitoring air in clean-rooms. In the aerosol-handling section of the instrument, the intake flow rate was increased from 0.2 to 28.3 liters/min, and a clean air sheath was added for better accuracy in the lower-sized channels. In the optics system, a ribbon filament lamp was substituted for the coiled filament unit for a more uniform and improved illumination; also, the receiving optics and detector were revamped to spread out the flux over the photocathode surface, thereby improving the photoelectric detection accuracy. In the electronics system, the calibration pulse readout was changed for improved versatility and accuracy; the 6-vdc supply was modified to accommodate the larger wattage lamp, and a number of minor circuit changes were made for various reasons. The lower limit of detection for the modified instrument is 0.5-μ particle diameters. The upper calibrated limit is 57 μ.

Complete details are presented in the body of this report on the investigative and modification phases of the work. Design details are presented on all of the modifications made and operating procedure and performance data on the modified system are given. Engineering drawings on all mechanical and structural modifications are in the appendix. All information and data needed for the modification of another Royco instrument are given in this report; the work may be done without reference to the Royco instruction manual. Also included are the results of a partial study on techniques for improving the sampling capability and performance characteristics of the Royco nephelometer.

Gordon, E. S.: Improvements in Hydrosol Particle Counting Instrumentation. IITRI No. E6012-15, Illinois Institute of Technology Research Institute, Chicago, Illinois, 8 March 1965.

The Royco Model 300 nephelometer counter was studied and extensively modified by the Illinois Institute of Technology Research Institute to improve its sampling capability and accuracy for monitoring the cleanliness of fluids of interest at MSFC. The hydrosol handling system was revamped to increase the sample flow to 3 gpm with the use of a larger pump. In the optics system, a

ribbon filament lamp was substituted for the coiled filament unit for more uniform and improved illumination, the receiving optics and detector were revamped for more accurate detection, and larger slits were installed for a higher inspection factor. In the electronics system, the calibration pulse readout was changed for improved versatility and accuracy; the 6-vdc supply was modified to accommodate the larger wattage lamp, and a number of minor circuit changes were made for various reasons. The lower limit of detection for the modified instrument is 14.5 μ particle diameters and the upper calibrated limit may be adjusted as high as 565 μ (calibration with Lycopodium spores). The total flow rate was increased by 6:1 and the inspected flow rate (counted flow) by 96:1 for the modified instrument.

Complete details are presented in the body of this report on the investigative and modification phases of the work. Design details are presented on all of the modifications made; operating procedure and performance data on the modified system are given. Engineering drawings on all mechanical and structural modifications and detailed parts descriptions are given in the appendix. All information and data needed for the modification of another Royco instrument are given in this report; the work may be done without reference to the Royco instruction manual.

This program was actually an addition to the original contract; in the original contract, a similar study and resultant modifications were made to the Royco PC-200A aerosol counter.

Killion, M. J.: Comparison of the Automatic Counter Method with the Microscopic Method for Counting Dust Samples. QCL Memo CT-4-3-1. Autonetics Division of North American Aviation, Inc, Los Angeles, California, 2 April 1963.

The primary concern of this investigation was to compare the Royco PC-200A automatic particle counter with the microscope method for counting and sizing airborne particulate contamination. Earlier studies had established that a wide variation exists among the operators. One operator, who represented the statistical average of the operators employed at Autonetics, read the samples by the microscope method. A total of 130 samples was taken simultaneously by both methods.

In addition to the above, a comparison was also made between white membrane and black membrane filters. Seventy samples were used. The approximate cost per sample by each method was also compared.

It was concluded that the microscope method and the automatic counter method are interchangeable in the ranges above 5 μ. The particle spectra used in the test are defined by 100,000 particles per cu ft, 0.5 μ in size, to 10 particles per cu ft, 50 μ in size as the extreme measured limits, with an approximately logarithmic distribution between the two. A deviation of 1.8% between the two methods was observed, the Royco values being higher. There was a deviation of 10 to 15% between the black and white membrane samples, the black membranes giving the higher values.

Under the selected conditions and ignoring overhead and certain other costs, the automatic counter method costs $0.37 less per sample than the manual method. This is for the first 2 yr, during which the equipment purchase price is being written off. In subsequent years, the cost-per-sample differential rises to $1.89 per sample.

Krupnick, A. C.: The Effect of Hydrocarbon Contamination on the Gas Bearings Used in the Saturn ST-124 Guidance Systems. TM X-53070. NASA-MSFC, Huntsville, Alabama, 23 June 1964.

The guidance system (ST-124 platform) in the Saturn V vehicle contains a critical bearing (AB-5) that is lubricated by or suspended in gaseous nitrogen to provide an essentially frictionless condition. The extremely close mechanical tolerances between the surfaces make the bearing highly sensitive to trace quantities of oil in the gas. Experimental tests showed that performance is not appreciably affected by very clean gaseous N_2 (less than 0.1-ppm hydrocarbon content). However, at 0.5-ppm hydrocarbon content, performance decays to the malfunction criteria level in approximately 280 hr. Examination of the bearings after test showed that, in addition to collection at the inlet filter, oil also was deposited at the plenum inlets and in the flow restrictors.

For applications where the combined checkout on the gas bearings and flight operating times do not exceed 200 hr, the current 0.3-ppm hydrocarbon limit provides an acceptable margin of safety. However, for operational lifetimes longer than 200 hr, the limit should be lowered to 0.2 ppm or less.

Leovic, W. J. et al.: Mobile Gas Analysis Laboratory Study Report and Specifications. ER-6422. TRW Electromechanical Division, Cleveland, Ohio, Revised Final Report, 3 May 1965.

This report was prepared under a NASA contract for a study to determine the best type of analytical equipment, operating procedures, and layout for a mobile test laboratory for Apollo spacecraft support.

The program comprised the following phases:

1) Studying the equipment and practices in laboratories routinely performing trace gas analysis of oxygen and hydrogen;

2) Surveying the data of manufacturers of analytical equipment and consulting with their application engineers;

3) Consulting with engineering personnel from NASA, Grumman and NAA who are directly involved in building the ground support system for the Apollo and LEM fuel cell systems. The purpose of these meetings was to establish the launch site conditions under which the mobile laboratory is to perform its functions;

4) Selecting the required equipment for the mobile test laboratory;

5) Performing a preliminary vehicle design, preparing layout drawings of the laboratory and its system, and writing the procurement specifications for the mobile test laboratory.

The laboratory was to have the capability of analyzing oxygen and hydrogen gas streams with purity and impurity requirements given in the following tabulation:

Trace	Oxygen Reactant	Hydrogen Reactant
Total Purity	99.9950%	99.9935%
N_2 (max)	10 ppm	10 ppm
Kr (max)	10 ppm	10 ppm
Xe (max)	5 ppm	5 ppm
Ar (max)	10 ppm	10 ppm
He (max)	--	50 ppm
O_2 (max)	--	1 ppm
CH_4 (max)	9 ppm	9 ppm
CO (max)	1 ppm	1 ppm
CO_2 (max)	1 ppm	1 ppm
Total Hydrocarbon (max)	12 ppm	--
Halogens (max)	0.1 ppm	--
Moisture (max)	3 ppm	3 ppm
N_2O (max)	1 ppm	--
NO_2 (max)	1 ppm	--
N_2O_4 (max)	0.5 ppm	--
NO (max)	4 ppm	--

The authors discuss chromatography, infrared photometry, mass spectroscopy, the infrared nondispersive photometer analyzer, the electrolytic hygrometer, and the electrolytic oxygen analyzer.

The mass spectrometer was not recommended, because its sensitivity was considered to be too low. Because of the lower reported downtime, the simplicity of operation, and the faster analyses, the Perkin-Elmer Model 21 was chosen over the Beckman IR7 and Beckman IR4 for the analytical infrared spectrophotometer to detect traces of NO, NO_2, N_2O_4, and N_2O in the oxygen reactant supply. Because of the favorable recommendations from two of the laboratories visited, the Model 200 MSA Lira nondispersive spectrometer was recommended for monitoring the CO_2 content in both the oxygen and hydrogen sample streams.

The greatest usefulness of a chromatograph for this laboratory's purpose is accomplished when the sample gas stream is processed in a device that concentrates the contaminants in the carrier gas stream. Beckman, Perkin-Elmer, and Barber-Coleman provide means to attach concentrators as accessories to their standard chromatographs, but TRW failed to locate a laboratory that could furnish performance data of such equipment when used for trace gas analysis. Trace gases are defined as those present in less than 50 ppm. The final recommendation was for special high-sensitivity dual-column concentrating chromatographs supplied by Air Reduction Co, Inc, for the detection of N_2, Kr, Xe, Ar, He, CH_4, CO, halogens, and N_2O in the oxygen and hydrogen reactant samples.

The Beckman analytic system and MSA Minoxo oxygen analyzers using Hirsch cells as detectors all satisfied the requirement for measuring oxygen in hydrogen down to 1 ppm. The choice of the Analytic Co. instrument (Series 300) was based on preference of laboratory operators using these instruments and availability of service and parts.

The electrochemical hygrometer, made by Beckman and Consolidated Electrodynamics, were both reported to be capable of measuring moisture in gases down to 3 ppm. The Beckman is used much more frequently and was accordingly selected for the mobile laboratory. The requirement for operation in a hydrogen environment also makes the selection of the Beckman rhodium-type cell a better choice.

The flame-ionization detectors of Perkin-Elmer and Beckman are in general use and readily fulfil the requirements of the mobile laboratory. The Beckman Model 108 total hydrocarbon analyzer was selected, because the delivery time from the supplier is much more favorable. Perkin-Elmer does not have an inventory of such detectors and declined to produce their units except when orders for a number of units have been accumulated.

Mac Innes, W. F.: Instruction Manual for the Sampling of Missile Fluids. AFFTC-TR-60-45 (ASTIA No. AD 243248). The Fluor Corporation, Ltd, Los Angeles, California, September 1960.

This report describes in detail the operation of prototype sampling equipment described in the following report. The equipment is identified, and step-by-step operating instructions are provided for each sampling system.

Mac Innes, W. F.: Summary Report on Development of Sampling Techniques. AFFTC-TR-60-44, (ASTIA No. AD 243247). The Fluor Corporation, Ltd, Los Angeles, California, September 1960.

The Fluor Corporation Research Division was awarded a contract for the development of sampling techniques and particulate matter analysis procedures by the Directorate of Rocket Propulsion and Missiles, Air Force Flight Test Center, in March 1959. This work, the results of which were to be applied to fluids at Edwards Air Force Base, was undertaken in three simultaneous phases -- sampling, particle counting, and analysis. This report covers the development of sampling equipment. A second volume, an instruction manual, completed this phase of the project.

The purposes of the project were to develop the equipment and techniques necessary for the capture and identification of solid contaminants in missile ground support fluid systems, and to provide the means for making these techniques a portion of the routine capabilities of the chemical and metallurgical laboratory staff at the rocket test site.

The purpose of this report, for the sampling phase of the project, was to describe the development of sampling equipment and procedures for the particular conditions encountered in the fluid systems of the rocket static test facilities.

The scope of this phase of the project includes a study of the individual fluid systems to determine sampling requirements and the development of specific sampling equipment and techniques to best satisfy these requirements. The primary fluid systems under consideration are the kerosene, liquid oxygen and nitrogen, and gaseous nitrogen and helium complexes supplying the test stands. Additionally, water, hydraulic oils, lubricants, alcohol, trichloroethylene, and semifluids are considered, and the methods are extendable to the sampling of ammonia, hydrazine, fluorine, and nitrogen tetroxide.

The report discusses fluid systems and sampling objectives and sampling technology. The presentation is fairly comprehensive and hence will not be discussed. However, several points that are pertinent to the present study are summarized.

The general objective of sampling is to obtain a sample of the material that is representative of the fluid bulk and, consequently, can be accurately scaled to the whole. The difficulty of sampling for solid contaminants in fluids is that we can be sure, in only a few situations, that the solids concentration in any small portion of the fluid bulk is identical to what would exist if the contaminants were uniformly dispersed. The primary objectives of contaminant measurements in a fluid system of a rocket test site are to determine contaminant concentrations at the point of supply to the test stands, to determine contaminant concentrations at the point of receipt of the fluids at the base, and to determine contaminant concentrations at intermediate points within the systems that will best describe the occurrence, increases, or reduction of solid materials within the system. These objectives can best be met by sampling the flowing fluids at the applicable points in the system. Samples taken from the storage tank under static conditions can also be used to evaluate fluid contamination. However, static samples do not provide nearly so accurate a picture of the contamination as do dynamic (flow) samples. Further, the fluid system pipelines between tank and test stand are generally complex and long, and measurements at the inlet may not correspond to results that would be obtained at the discharge end.

The classical error in flow sampling occurs when the sample nozzle inlet velocity differs from the stream velocity. Historically, many sampling tasks have been performed nonisokinetically, probably because the then unrecognized need did not justify this new complication. Modern sampling is usually isokinetic and the latest Air Force specification for the testing of filter separators requires that an isokinetic probe be used.

An analysis of error due to anisokinetic sampling is presented in the appendix of the report. In addition the report describes the prototype sampling equipment for specific fluid systems. The design of all sampling probes for flowing systems consists essentially of a tube having a 90-deg bend near the end of it, so the axis of this portion of the tube is parallel to the direction of fluid flow. The leading edge of the probe is sharp and the surfaces are tapered back from the edge at the maximum possible angle.

The specific systems for which prototypes were developed are RP-1, high pressure gases, cryogenic liquids, water and similar fluids, hydraulic oils, and semifluid lubricants.

Manka, D. P.: "Complete Gas Chromatographic Analysis of Fixed Gases with One Detector Using Argon as Gas Carrier." Analytical Chemistry, Vol 36, No. 3, March 1964, p 480 thru 482.

This paper describes a gas chromatographic method for the analysis of fixed gases containing hydrogen that required one analysis, one detector, and argon as the gas carrier. The method utilizes both sides of a sensitive microthermistor thermal conductivity cell (Gow-Mac Model JDC-133) to detect the gas components separated on silica gel and molecular sieve columns. A gas sample, containing various concentrations of these components, can be analyzed in 10 to 16 min, depending on the lengths of the columns. Blast furnace top gases; combustion gases; fuel mixtures of blast furnace, coke oven, and natural gases; and hydrogen generator gases with hydrogen concentrations varying from 0.05 to 95.0% of vol are ideally analyzed by this method. Other fixed gases may be determined accurately in concentrations as low as 0.05% of vol.

Miller, J. M. and A. E. Lawson, Jr.: "Gas Chromatographic Detector Response Using Carrier Gases of Low Thermal Conductivity." Analytical Chemistry, Vol 37, No. 11, October 1965, p 1348 thru 1351.

When performing a gas chromatographic analysis with a carrier gas whose thermal conductivity approaches that of the compound being studied, anomalous results are often obtained. The most common examples are the reverse and W-shaped peaks obtained with nitrogen as the carrier gas. From an investigation of a variety of compounds, these anomalies have been shown to be a function of sample size. In nitrogen, at 100°C, most of the compounds studied gave W-shaped chromatographic peaks. In argon and in carbon dioxide, under identical conditions, none of the compounds studied gave W-shaped peaks, although some responded in a positive and others in a negative direction. The effect of detector cell geometry was also investigated.

The data presented show that W-shaped peaks are common when nitrogen is used as a carrier gas at normally high filament currents. Hence, a thermal conductivity detector should not be used with nitrogen carrier gas unless prior investigation is done to determine the extent of this anomalous behavior for compounds under operating conditions to be used.

The cause of W-shaped peaks would appear to be the same for H_2 in helium and for organic compounds in N_2. The explanation that has been advanced to account for this behavior -- a maximum or minimum in the thermal conductivity vs concentration isotherm -- correctly describes the data obtained. However it seems unlikely that so many compounds would show maximums or minimums in nitrogen but none of them would do so in Ar or CO_2, while they do give positive and negative responses in these gases.

One possible alternative explanation is that a concentration gradient is established in the cell as a result of thermal diffusion between the cell wall and the hotter filament. This could result in a transfer of thermal energy across the gradient, the so-called Dufour effect. If so, it should be possible to eliminate this effect by increasing the turbulence in the cell. Preliminary investigation with such a cell indicates that this is so.

The lack of W-shaped peaks and the low cost of CO_2 suggest that it would be a better carrier gas than nitrogen for preparative work (and possibly even some analytical work).

Miyaji, J. C.: Liquid Automatic Particle Counters. General Dynamics/Convair, San Diego, California. Paper presented to ASTM Committee D-2 on Petroleum Products and Lubricants, Technical Committee O Symposium, Chicago, Illinois, 10 June 1965.

This report describes the following liquid automatic particle counters:

1) Coulter counter;

2) HIAC automatic particle counter;

3) Micro-Scan continuous contamination monitor;

4) Royco nephelometer liquidborne particle monitor;

5) Sperry liquid contaminant level indicator.

The analysis of the counter includes the following areas of interest:

1) Technical description;

2) Calibration;

3) Performance characteristics;

4) Source of error;

5) Precision of results;

6) Cost.

The report presents the above analyses in terms of data supplied by the manufacturers. Hence, comparisons between different counters would not be valid and none are made.

Mortenson, L. N.: Evaluation Testing of a Flow Sampling System Designed by the Fluor Corporation Ltd. AFBMD-TR-61.38. Wyle Laboratories, El Segundo, California, 20 March 1961.

This report presents the results of evaluation tests of a flow sampling system constructed in accordance with Fluor Corporation Report Number AFFTC-TR-60-44, Drawing Number 2-4042. The evaluation tests, consisting of flow sampling system efficiency tests, utilized both gaseous nitrogen and water as test media. An additional flow sampling system, constructed in accordance with the above-mentioned Fluor Corporation Report, was subjected to the sampling system flow characteristics test and was used to determine the system tare during the flow sampling system efficiency tests, utilizing water as the test medium.

The floating ball type arrangement to determine isokinetic flow, as described in the Fluor Corporation Report, was not supplied with the flow sampling system; therefore a water manometer was used to determine isokinetic flow.

During the flow sampling system efficiency tests, using gaseous nitrogen as the test medium, the following errors were observed from the design value:

1) Bronze shot - -95.8%;

2) Glass beads - -89.3%;

3) Polyethylene dust - -86.7%.

During the flow sampling system efficiency tests, using water as the test medium, the following errors were observed from the design value:

1) Bronze shot - -30.7%;

2) Glass beads - -14.6%;

3) Polyethylene dust - -22.7%.

When subjecting the two sampling systems to the flow characteristics test, an error of ±6.7% was observed from the design value.

The flow sampling system efficiency test was repeated, using water as the test medium. The error between flow sampler No. 1 and flow sampler No. 2 was taken into consideration in evaluating the system tare. The following errors were observed from the calibrated value:

1) Bronze shot - -17.5%;

2) Glass beads - -10.0%;

3) Polyethylene dust - -22.5%.

Mortenson, L. N.: Evaluation Testing of Flow Sampling Wedge. AFBSD-TR-61-53. Wyle Laboratories, El Segundo, California, 17 July 1961.

This report gives the results of an evaluation test of a flow sampling device capable of obtaining a representative sample of a fluid stream under full flow conditions. The sampling device consists of an isokinetic wedge-type sampling probe and an appropriately sized millipore holder through which the sampled fluid is passed before analysis.

In addition, static pressure taps are provided in the mainstream piping and in the wedge assembly that, when adjusted to a differential pressure of zero, provide for isokinetic flow conditions.

One wedge-type flow sampling system was subjected to evaluation tests consisting of flow sampling system efficiency tests, using both gaseous nitrogen and water as test media. An additional wedge-type sampling system was used to determine the system tare during the flow sampling system efficiency test, using water as the test medium.

The wedge-type flow sampling system was designed to sample 5.65% of the main stream flow rate. During the flow sampling system efficiency test, using gaseous nitrogen as the test medium, the flow rate through the wedge assembly was inadvertently maintained at 10% of the main-stream flow rate. Isokinetic flow conditions in the wedge were thus exceeded by 77% during this efficiency test. Test results obtained under these conditions indicated the following errors in the probe assembly in predicting the main-stream contaminant level:

1) With bronze shot - +11.5%;

2) With glass beads - +9.7%;

3) With polyethylene - +6.2%

During the flow sampling efficiency test, using water as the test medium, with proper isokinetic flow conditions established in the wedge assembly, the following errors in predicting main-stream contaminant levels were observed:

1) Bronze shot -0.5%;

2) Glass beads -2.5%;

3) Polyethylene dust - less than $\pm$0.5%

One wedge-type flow sampling system was subjected to the flow characteristics test, using water as the test medium, to determine conformance of the wedge assembly to the design criterion of sampling 5.65% of the total main-stream flow rate under isokinetic conditions. It was determined that the wedge-type sampling system sampled 5.67% of the total main-stream flow rate under isokinetic conditions. The results of the two wedge-type sampling systems were compared, and no perceptible error could be observed between the sampling rates.

On the basis of the tests reported in this report, the wedge-type flow sampling system was considered to be relatively insensitive to large errors in the establishment of isokinetic flow conditions, as evidenced by the error in prediction of main-stream contaminant level of 11.5% with an error in isokinetic flow through the probe of approximately 77%. Nevertheless the author of the report recommends that, when system flow rate and line pressure are known to be constant, the use of a fixed orifice in the sampling portion of the wedge assembly be considered. The use of a fixed orifice thus eliminates the necessity to adjust for isokinetic flow conditions.

The author concluded that the wedge-type flow sampling system, when properly used under isokinetic flow conditions, provides accuracies in the prediction of main-stream contaminant levels on the order of -2.5 to 0% error over the extensive density variation range found in the use of bronze shot, glass beads, and polyethylene dust.

Perry, C. L.: Evaluation of the Beckman and Perkin-Elmer Total Hydrocarbon Analyzers and Their Correlation to the Carbon Tetrachloride Scrubber Method for Condensable Hydrocarbons. MTP-P & VE-M-63-5. NASA-MSFC, Huntsville, Alabama, 14 March 1963.

This report presents a comparison of two commercial hydrocarbon analyzers and the correlation of results obtained by means of these analyzers with those obtained by the carbon tetrachloride scrubber method for trace hydrocarbon analysis. Both commercial instruments were of the hydrogen flame ionization type and were total-hydrocarbon analyzers. They were the Perkin-Elmer Model 213-B hydrocarbon detector and the Beckman Model 109 hydrocarbon analyzer.

The $CC\ell_4$-scrubber method of analysis for hydrocarbons in gas consists of passing the gas sample through three gas scrubbing bottles, which are connected in series. Each scrubber contains about 100 ml of $CC\ell_4$, which retain the hydrocarbons. The gas sample volume is measured with a wet test meter, downstream of the scrubbers. After 600 liters of gas are scrubbed, the $CC\ell_4$ from the three scrubbers is combined and concentrated to 5 ml by boiling. The $CC\ell_4$ is analyzed by an infrared spectrophotometric technique, using the C-H stretching frequency at 2940 wave numbers.

Hydrocarbons detected by this method are called condensable hydrocarbons. Any hydrocarbon that has a boiling point less than $CC\ell_4$ will not be determined. Information is not available concerning the exact molecular nature of these condensable hydrocarbons, although they have been defined as those normally liquid at ambient temperature and pressure. The $CC\ell_4$-scrubber method is slow and tedious and requires considerable skill in technique.

The hydrogen flame ionization principle is described in Calongne and Morris, New Techniques for Testing Trace Hydrocarbon Contamination of Gases. Problems developed with both instruments during testing that appear to be due to either poor assembly techniques or design.

The Perkin-Elmer Model 213-B appears to be the better instrument. Claims made for its operation are realistic; whereas, claims made for the operation of the Model 109 were not borne out by this investigation. The Model 213-B is a truly portable instrument, quite suitable for field operation. The Beckman Model 109 is no more portable than any other bench instrument requiring 110-vac and compressed gas fuel supplies. The operation of the Beckman Model 109 appears to be more stable and drift free than the operation of the Perkin-Elmer Model 213-B; however, when analyzing hydrocarbons in a concentration range of 60-80 ppm, neither instrument is sufficiently sensitive because of the recovery time required.

Neither instrument is considered suitable for determining condensable hydrocarbons in accordance with the presently defined specifications. Both instruments are total-hydrocarbon analyzers, and they can analyze the noncondensable as well as the condensable hydrocarbons in the systems sampled. It was shown in this study that there is no correlation between total and condensable hydrocarbons.

If it is necessary to use a total-hydrocarbon analyzer to monitor such gas streams as air and nitrogen, the specifications for hydrocarbon contamination must be defined on the basis of total-hydrocarbon content rather than on the basis of condensable hydrocarbons.

Reed, R. E., R. H. Tucker, and K. Stone: Study of Filtration Mechanics and Sampling Techniques. Oklahoma State University, Stillwater, Oklahoma, Technical Summary Report, 30 November 1964.

This report discusses filter media and methods of test for them. More pertinent to Contract NAS10-2693 is the extensive testing of contaminant (particulate) distribution in a plane perpendicular to the axis of flow by an isokinetic sampling probe that is positioned throughout regular increments in the radius of the test stream, and the comparison of particulate samples taken with a turbulent flow sampling valve and a bleeder valve with those taken simultaneously by the isokinetic probe in the same sample stream.

AC test dust was used as the particulate contaminant in the evaluation. The largest size range counted was >20μ, and all counts were made by a HIAC Model PC-202 particle counter. The test medium was MIL-H-5606 hydraulic oil.

Reiman, P. A. and B. V. Mokler: Investigation of Sampling Requirements for Aircraft Fuel Contamination Control. Arthur D. Little, Inc., Cambridge, Massachusetts, October 1961.

The abstract for this investigation given in this report states: "An experimental investigation of sampling requirements for aircraft fuel contamination control is described. In general, it was found that in regions of turbulent flow in a fluid transfer system, the quality of a sample is unaffected by the configuration of the sampling system or the rate of sample withdrawal. While these statements are less valid for contaminants larger than 100 μ in diameter and for flow conditions approaching the laminar region, normal practice at U.S. Air Force bases would not require extreme accuracy in these areas. Thus, a simple pipeline sampling device is proposed which consists of a straight probe inserted into the pipeline, a ball valve for on-off flow control, and a quick-connect coupling for simple connection to an analyzer or filter system. The use of a direct system for filtering out contaminants as the sample is withdrawn is recommended since large sources of error found in attempting to analyze samples collected in bottles.

"Since the information on fluid contamination provided by sampling tanks and storage vessels is of limited utility, we recommend procedures as specified in ASTM Method D-270."

Since the particulates used in the investigation were "a mixture of fine AC test dust and a relatively coarse red iron oxide," not further quantified or defined, and since only a gravimetric method of solids analysis was used throughout the program for particle analysis, the conclusions stated in the abstract should be considered as applying to the determination of total filterable solids only, by gravimetric means. They should not be extrapolated, on the basis of evidence presented in this report, to considerations of representativeness of these sampling methods, in terms of particle population by size category.

Riesz, C. H.: Development of Test Methods and Test Equipment for Determination of Hydrocarbon Contaminants. Final Summary Report, IITRI 3223-24. Illinois Institute of Technology Research Institute, Chicago, Illinois, 22 June 1964.

This document is a comprehensive report of an extensive program that included studies of methods for determining the nonvolatile contamination residues (NVR) in degreasing solvents, hydrocarbon, and other contaminants in compressed gases, and direct determination of contaminants on component surfaces. Delivery of instrumental devices capable of meeting NASA specifications and of operation by relatively unskilled technicians was the major objective in this study.

An NVR nephelometer was designed, assembled, and delivered to determine NVR in volatile solvent washings used to clean components and assemblies. The instrument depends on the formation of a monodisperse aerosol in an air stream. The amount of forward-scattered light is a measure of the NVR level down to 0.5 ppm. This operating principle was preferred over infrared absorption since the light-scattering data showed good correlation with gravimetric determinations of NVR.

An instrument for determining hydrocarbon contaminants in compressed gases was developed and delivered. The analysis depends on the chromatographic separation of light and heavy hydrocarbons, which are then displayed on a C-scope within 30 seconds. For air and nitrogen, the instrument can detect down to 0.05 ppm of noncondensable and below 0.1 ppm of condensable hydrocarbons. For helium, the sensitivity is much less -- 0.3 ppm for noncondensable and 0.5 ppm for condensable hydrocarbons. Also included in the instrument design is an automatic gas sampling system for use up to 5000 psi and a commercial (Beckman) hygrometer for determining moisture. Flame-ionization detectors used with the instrument are unaffected by the presence of moisture. The design of an instrument for continuous analysis not only of hydrocarbons but also of fluorocarbons and silicones was studied briefly.

The direct determination of surface contamination on metal surfaces was also investigated intensively. Of the several approaches selected for final development, vapor adsorption/desorption offered the greatest promise. The principle of operation depends on the absorption of known concentrations of vapor. The amount of absorption is then related to the degree of contamination. Aluminum surfaces, especially after etching by a caustic

cleaning solution, afford vapor adsorption that is comparable in amount to the desired certification level, corresponding to 1 mg of NVR per sq ft of surface. Despite this limitation, the method appears to afford the only presently known procedure for direct analysis. A design for a proposed instrument has been submitted as well as a proposed study of a probe device that would analyze accessible surface sites.

Roberts, R. M, and J. R. Finkel: Research on New Techniques for Analysis of Contaminants in Liquid Propellants. APL-TDR-64-3. Aerojet-General Corp, Azusa, California, March 1964.

The program provided applied research services leading to the identification and analytical determination of contaminants in an important group of storable liquid propellants. Selection of the test procedures was guided by the ultimate goal of designing an experimental apparatus suitable for monitoring propellant impurities at a launch site.

A literature survey concentrating on possible contaminants known or predicted to be present in liquid propellants was conducted, and Aerojet then selected the analytical techniques considered best suited to specific propellants on the basis of theoretical or experimental knowledge. They also selected a single technique applicable to storable propellants as a class. The following propellants were considered as within the scope of the project:

1) Pentaborane-9;

2) Hydrazine;

3) Unsymmetrical dimethylhydrazine;

4) Mixed-amine fuel (MAF-4);

5) Hydrogen peroxide;

6) Dinitrogen tetroxide;

7) Perchloryl fluoride;

8) Tetrafluorohydrazine;

9) 50-50 hydrazine/UDMH;

10) Monomethylhydrazine;

11) Chlorine trifluoride;

12) Ammonia.

The popular commercial methods of propellant synthesis were surveyed and the results of the survey are summarized in the report.

The principal aims of the laboratory effort in this program were to develop and improve techniques for the use of gas chromatography in propellant-contaminant surveillance to define wherever possible the nature of such contamination. The report describes the experimental work performed in the laboratory program, and the design of the instrumentation used in the experiments.

Analysis of storable propellants by gas chromatography was extensively studied in this program, and instrumentally-compatible procedures were adapted or developed for 11 of the 12 propellants investigated. This methodology was incorporated into the propellant contaminant analyzer (PCA), an automated prototype instrument designed for launch-site propellant surveillance. On-site use of the PCA is intended to permit the rapid status checking of ready-storage propellants susceptible to decomposition from aging or unintentional environmental exposure. The introduction of propellants has been provided for in three sampling systems that permit analysis from on-stream lines, pressurized devices, and conventional sample containers. Operator attention has been minimized to a few simplified setup and sampling procedures.

The instrument has been shown to furnish a repeatability (in the on-stream mode) for major-peak integrals of slightly over 1% and an analytical precision of better than 5% for components occurring at or below the 1% level. The surveillance of contaminants, which would often be difficult to analyze by other techniques with better than 25% precision, should therefore by significantly upgraded by this instrumentation. The ultimate proving of this instrument must await the extensive evaluation trials to be conducted by the Air Force.

In two cases, a decided need exists for further experimental work. The investigation of N_2O_4 gas chromatography was not developed to the point where this propellant could be successfully analyzed on the PCA, while chlorine trifluoride proved very difficult to analyze under the most favorable conditions. For N_2O_4,

very encouraging results were obtained late in the program. Further investigation, possibly to include studies of mixed oxides of nitrogen, would be worthwhile. Similarly, additional experience is needed in the area of fluoro-oxidizer analysis. The development of chemically inert or easily passivated gas-chromatograph columns capable of resolving CTF constituents, and perhaps those of bromine pentafluoride, oxygen difluoride, and fluorine, would be a welcome advance in the field of propellant surveillance.

Romine, J. O. and J. B. Gayle: Evaluation of High Accuracy Products Corporation Model PC-101 Automatic Particle Counter. MTP-P & VE-M-63-3. NASA-MSFC, Huntsville, Alabama, 15 February 1963.

The HIAC automatic particle counter used for this investigation was a production model with provision for simultaneous monitoring of four particle-size ranges, 10 to 25, 25 to 50, 50 to 100, and >100μ.

In operation the sample of fluid passes through a counting cell in which the flow characteristics are such that the solid particles pass the window in single file. This study used a 0.007-in.-dia flow-restricting orifice for all tests. The particle is sensed by interruption of a collimated light beam, resulting in a change in the output signal from a phototube on the opposite side. By means of electronic circuitry, these signal changes are converted to counts of particles in the various size ranges.

Calibration of the counter is accomplished by use of standard particles that are reproduced photographically on a transparent disc. Equivalent circle diameters registered by the counter were taken as being numerically equal to the longest dimensions recorded microscopically for the purpose of establishing corresponding size ranges for HIAC and microscopic counting.

The HIAC automatic particle counter was evaluated to determine its suitability for both laboratory and in-line monitoring of particulate contamination in MIL-H-5606 hydraulic fluid. The investigations were accomplished by passing fluid, representing varying levels of particulate contamination, through the counter. For laboratory samples, this was accomplished by use of a standpipe arrangement that was pressurized from the laboratory air supply. For in-line samples, the counter was connected to a

filtration cart for which the operating flow rate and pressure were 3 gpm and 50 psi respectively; the flow rate through the counting cell was approximately 1 ml/min. Microscope particle counts per 100 ml of fluid varied from 46 to 3129 in the 10-to-25-μ range, from 18 to 554 in the 25-to-50-μ range, from 2 to 49 in the 50-to-100-μ range, and from <1 to 13 in the >100-μ range.

During the preliminary tests, major difficulties were encountered with air bubbles, which register as particles; this produces spurious counts, especially in the larger size ranges.

Statistical analysis of the data indicated that the HIAC counts have an acceptable degree of precision and are closely correlated with the microscopic counts. Therefore, it was concluded that the HIAC counter is well suited for contamination analysis of particles over 10 μ in size.

In-line results with this counter differed markedly from those obtained microscopically for samples taken from an ordinary bleed valve located just upstream of the counter. The cause of the discrepancy was not established, but it was theorized that either the samples withdrawn for laboratory analysis or that portion of the total flow diverted through the counter for automatic monitoring was not representative of the average contamination level in the system. Also, it was noted that the relatively small flow rate through the counter (≈1 ml/min) severely restricted the rate at which analyses could be made. Romine and Gayle, Evaluation of High Accuracy Products Corporation Model PC-202 Automatic Particle Counter, state that studies of sampling valves carried out after the investigation of the Model 101 counter suggested that probably neither the automatic nor the microscopic counts were representative of the average contamination level in the system because of sampling problems.

Romine, J. O. and J. B. Gayle: Evaluation of High Accuracy Products Corporation Model PC-202 Automatic Particle Counter. TM X-53145. NASA-MSFC, Huntsville, Alabama, 2 October 1964.

In a previous investigation, it was shown that the HIAC Model 101 automatic particle counter gave excellent results for laboratory samples. However, marked discrepancies were noted between in-line automatic counter results and those determined microscopically for samples withdrawn from the system through a bleed valve.

To obtain further information about in-line monitoring of particulate contaminant, an improved HIAC counter (Model 202) was used to obtain in-line data for comparison with microscopic results for samples withdrawn from the system through an improved sampling arrangement. This counter could accommodate flow rates up to 35 ml/min. The counter was fitted with a Maledco turbulent flow sampling valve to ensure that the portion of the total flow diverted through the counter for monitoring was representative of the average concentration of the system.

The results indicated that with suitable operating procedures the Model 202 counter gives results generally equivalent to those determined microscopically.

Romine, J. O. and J. B. Gayle: Evaluation of Royco Model 3300 Automatic Particle Counter for Pneumatic Systems. TM X-53047. NASA-MSFC, Huntsville, Alabama, 12 May 1964.

This memorandum reported the evaluation of the Royco Model 3300 gaseous system automatic particle counter using near atmospheric-pressure air as the sample stream fluid carrying yellow plastic beads having a specific gravity of approximately 1.42 and ranging in size from 5 to 100 μ. Of three contamination levels studied, the first was ambient air without plastic bead injection. The smallest size ranges counted (> 2 μ and > 5 μ) exhibited little correlation; results for the > 10-μ-range tended to scatter about a line of roughly unit slope and zero intercept; results for the largest size ranges (> 20 μ and > 40 μ) were similar to those for the > 10-μ-range, except that the scatter increased with increasing particle size, becoming so large for the > 40-μ-range that the results were of little or no value.

The conclusion reached was that, at its then current state of development, the counter was not adequate for most applications in monitoring particulate contamination in gaseous systems.

Walker, D. R.: Automatic Particle Counters for Hydraulic Fluids, Part 1 - Calibration. Engineering Paper No. 1576. Douglas Aircraft Co, Inc, Missile & Space Systems Div, Santa Monica, California. Paper presented at Society of Automotive Engineers Meeting, Miami, Florida, May 1963.

The report is divided into two parts. This portion, Part 1, Calibration, introduces an aerospace industry-wide problem of definitions, describes three methods of instrument calibration, illustrates several automatic counting principles, and documents test data in the application of the counting principles. The instruments discussed are the Coulter counter Model A, the HIAC counter Model PC-101, the Royco Model 3000 nephelometer, the Sperry Style 50C494 counter, and the URI fuel contamination detector. (The model numbers for all except the Coulter are taken from Part 2, Performance.)

Walker, D. R.: Automatic Particle Counters for Hydraulic Fluids, Part 2 - Performance. Engineering Paper No. 1791. Douglas Aircraft Co, Inc, Missile and Space Systems Division, Santa Monica, California. Paper presented at ASTM Meeting, Palo Alto, California, October 1963.

This report is divided into two parts. This portion, Part 2, Performance, accounts for the comparison testing of the Coulter, HIAC, Royco, Sperry, and URI counters identified in Part 1 with AC test dust, black iron, aluminum oxide, and orange and green plastic particles and with ragweed pollen. Fibers were not counted because "their length to width ratio was not suitable for accurate analysis by the automatic counters" (para 2.2, p 3). The automatic counter results were compared with those obtained by microscopic means.

The following conclusion, among others, was based on the results of the performance evaluation. "The repeatability of the automatic counters was a function of the statistical number of particles counted."

Weitzel, D. H. and L. E. White: "Continuous Analysis of Ortho-Parahydrogen Mixtures." Review of Scientific Instruments, Vol 26, No. 3, March 1955, p 290 thru 292.

This paper describes a continuous flow analyzer for ortho-parahydrogen mixtures using a Gow-Mac thermal conductivity unit. The principle of operation is that the thermal conductivity of parahydrogen is somewhat greater than that of orthohydrogen for

all temperatures from about 60 to 300°K. Basically the method consists of electrically heating a wire surrounded by the gas to be analyzed and measuring the electrical resistance of the wire after temperature equilibrium has been reached. The temperature and hence the resistance of the wire will depend on the thermal conductivity of the gas surrounding it.

The analyzer is in use at the Cryogenic Engineering Laboratory of the National Bureau of Standards, Boulder, Colorado.

Spaceborne Gas Chromatograph Atmosphere Analyzer. NASA CR-52024. Beckman Instruments, Inc, Fullerton, California, June 1961. (Available from NASA Scientific and Technical Information Facility as X63-82054).

This report presents the results of a feasibility and design study of a spaceborne gas chromatograph instrument for analysis of the atmosphere in manned space capsules.

The results of the study indicate that the following specifications can be achieved with the Beckman spaceborne gas chromatograph:

1) Weight - 15 lb, including carrier gas flask;

2) Volume - Less than 1,000 cu in., including carrier gas flask;

3) Input Power - Several options are possible, and the design will be determined by the power available; a 28-vdc supply is sufficient with average power consumption of 10 w and peak power of 15 w;

4) Columns - 1/8-in. x 6-ft aluminum tubing packed with polyethylene glycol and amine mixture on granulated Teflon; 1/8-in. x 3-ft aluminum tubing packed with Molecular Sieve 5A;

5) Carrier Gas - Helium;

6) Operating Temperature - Ambient temperatures of 50 to 80°F. (The constant temperature compartment would be maintained at 100°F.);

7) Readout - Ten channels will be provided, eight reading in partial pressure as follows,

   a) Oxygen - 0 to 200 mm,

   b) Nitrogen - 0 to 600 mm,

   c) Carbon dioxide - 0 to 50 mm,

   d) Water - 0 to 50 mm,

   e) Hydrogen - 0 to 20 mm,

   f) Methane - 0 to 20 mm,

   g) Ammonia - 0 to 0.25 mm,

   h) Carbon monoxide - 0 to 0.25 mm;

   The two spare channels will be included to analyze for additional organic vapors;

8) Analysis cycle - Six cycles/hr;

9) Accuracy - 2% of full scale.

"The B. P-Aquascan - "An Instrument to Measure Undissolved Water in Aviation Fuels." The British Petroleum Co, Ltd, Journal of the S.L.A.E., Vol XI, No. 8, 1962, p 3 thru 10.

This article describes an instrument designed to measure the amount of undissolved water in aviation turbine fuels. If undissolved water is present in turbine fuel in a finely dispersed state, the fuel will have a cloudy appearance. The degree of cloudiness depends on the concentration and droplet size of the water present.

The instrument is designed as a light absorption comparator in which two beams of light from a single source are compared photoelectrically after each has passed through associated liquid-filled absorption cells. One absorption cell contains turbine fuel as sampled from the fuel delivery stream, and the other contains a sample of the same fuel at an elevated temperature. The

sampling is done on a continuous basis. When undissolved water is present in the stream from which the samples are drawn, the fuel entering one of the absorption cells is cloudy, and the fuel entering the other cell is clear, since the water is in solution at the elevated temperature.

For such measurements to be established on a quantitative basis, however, it is necessary to ensure that the water droplets in the turbine fuel feed to the instrument have a consistent particle size distribution. Therefore, the fuel feed to the instrument is passed through a disperser that modifies the size of the water droplets to meet requirements. Entrained air also causes light absorption. Air separators are therefore included in the sample fuel system.

The article describes the instrument in detail and presents the results of tests with the unit. The instrument has been field tested, and these tests have confirmed the performance characteristics of the instrument.

B. REFERENCES

1. P. A. Reiman and B. V. Mokler: Investigation of Sampling Requirements for Aircraft Fuel Contamination Control. Arthur D. Little, Inc, Cambridge, Massachusetts, October 1961.

2. L. N. Mortenson: Evaluation Testing of a Flow Sampling System Designed by the Fluor Corporation Ltd. AFBMD-TR-61-38. Wyle Laboratories, El Segundo, California, 20 March 1961.

3. ——————: Evaluation Testing of a Flow Sampling Wedge. AFBSD-TR-61-53. Ibid., 17 July, 1961.

4. R. E. Reed, R. H. Tucker, and K. Stone: Study of Filtration Mechanics and Sampling Techniques. Oklahoma State University, Stillwater, Oklahoma, Technical Summary Report, 30 November 1964.

5. J. C. Miyaji: Liquid Automatic Particle Counters. General Dynamics/Convair, San Diego, California. Paper presented to ASTM Committee D-2 on Petroleum Products and Lubricants, Technical Committee O Symposium, Chicago, Illinois, 10 June 1965.

6. J. O. Romine and J. B. Gayle: Evaluation of Royco Model 3300 Automatic Particle Counter for Pneumatic Systems. TM X-53047. NASA-MSFC; Huntsville, Alabama, 12 May 1964.

7. ——————: Evaluation of High Accuracy Products Corporation Model PC-202 Automatic Particle Counter. TM X-53145. Ibid; 2 October 1964.

8. D. R. Walker: Automatic Particle Counters for Hydraulic Fluids, Part 1 - Calibration. Engineering Paper No. 1576. Douglas Aircraft Co, Inc, Missile & Space Systems Div, Santa Monica, California. Paper presented at Society of Automotive Engineers Meeting, Miami, Florida, May 1963.

9. ——————: Ibid., Part 2 - Performance. Engineering Paper No. 1791. Ibid. Paper presented at ASTM Meeting, Palo Alto, California, October 1963.

10. R. A. Anduze and J. C. Harris: Methods for Particle Counting in Hydraulic Fluids. ML-TDR-64-72. Monsanto Research Corp, Dayton, Ohio, May 1964.

11. J. B. Gayle and W. A. Riehl: Evaluation of the Sperry Ultrasonic Particle Counter. MTP-P & VE-M-62-8, NASA-MSFC, Huntsville, Alabama, 8 May 1962.

APPENDIX

IN-LINE FILTER HOLDER AND COUNTER

Design criteria for the In-line Filter Holder and Counter (ILFHC) for various applications are presented in Chapter V. The concept, in its simplest form, is that with this device it is possible to install a particle filtering medium in the device and precount the membrane after the sampling tool is connected to the sampling point and an initial operational fluid flow has occurred through it. It is then possible to sample the flow and count the particles without disturbing or transporting the sampling device between these operations. This will eliminate the contribution of extraneous particles from the sampling device itself and from the environment of installing, removing and counting the filtering medium.

Figure A-1 shows a partial cross section of the filter holding and counting chamber including the arrangement of the metallic membrane and support screen, the belleville spring seal, the spring loaded ball bearing, optical window and inlet tube, strongback supports and circumferential clamp, and a pictorial representation of the more important supporting components.

The capability of presenting all filtration areas of the filter medium to the microscope sequentially for particle examination purposes is intended to be shown in this drawing. A sequence for ambient liquids or gases follows. The circumferential clamp (probably a "Conoseal" model by the Marman division of the Aeroquip Corporation) is tightened prior to purge-flow and prior to sample-flow. This forces the knife-edge of the belleville spring to seal against the non-porous circumferential zone of the metallic membrane. Note that internal hydrostatic pressure due to sample flow supports this sealing force. The strongback supports are placed against the optical window and force is applied to them by means of the strongback clamps until they bottom out, metal to metal, on the inlet tube optical window upper seal nut. The face of these supports applied to the window is a resilient plastic, probably a silicone or fluorinated polymer.

Sample flow is distributed radially through the porous annular zone of the metallic membrane from the concentrically positioned inlet-tube outlet.

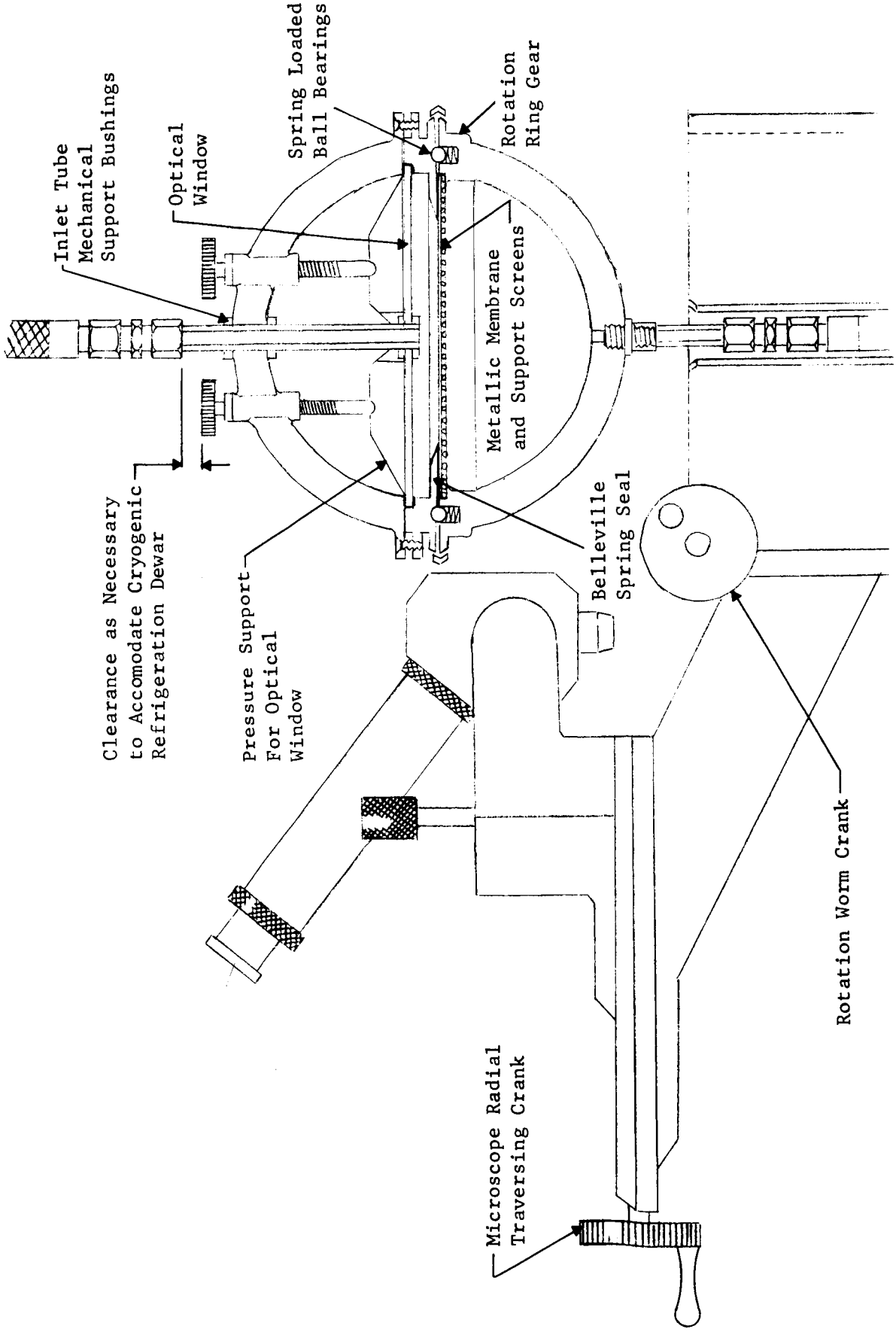

Fig. A-1 High-Pressure ILFHC Positioned above Microscope Fixture

When flow (and purging as required) is completed, the strongback supports are removed and the circumferential clamp is loosened. This allows the spring-loaded ball bearings to lift the upper chamber half until the knife-edge seal of the belleville spring just touches the membrane, with minimum friction, so that the lower chamber half can rotate with respect to the upper.

This rotation is effected by the rotation worm crank, shown as a portion of the microscope fixture, which engages the ring gear (an inset pinion-stock gear) just outboard of the spring-loaded ball bearing sockets. The microscope radial traversing worm gear moves the microscope with its focusing mechanism radially with respect to the membrane and chamber so that controlled relative movement between the microscopic field and filtration surface is now established in polar coordinates. Full field or "statistical" counting of the filtration surface may be performed.

The distance between the microscope objective lens and the membrane surface may be in excess of 40 mm (1.6 inches) with optics which are common today. Ample distance is available therefore for a thick optical window and a sufficiently deep filtration chamber to meet the design objectives of the device.

Figure A-2 shows a pictorial representation of the in-line membrane holder and counting chamber. Note the upper chamber-half rotational lock which engages the upper microscope traveling way when the microscope is projected radially onto the chamber. This serves to prevent rotational movement of the upper chamber-half with respect to the microscope when the lower chamber-half is rotated.

The inlet and outlet tubes will be 1/4 in. I.D. nominal, with an O.D. of about 1/2 in. The inlet tube optical window seal nuts will have a wall thickness of 1/4 in. so that the obscured central portion of the membrane will be slightly larger than a one-inch diameter circle. This area may be examined by rotation of the microscope in its fork but will require refocusing of the microscope during this examination. It is therefore recommended that a highly polished, impervious metallic cone, integral with the metallic membrane and with its apex upward, occupy this central area.

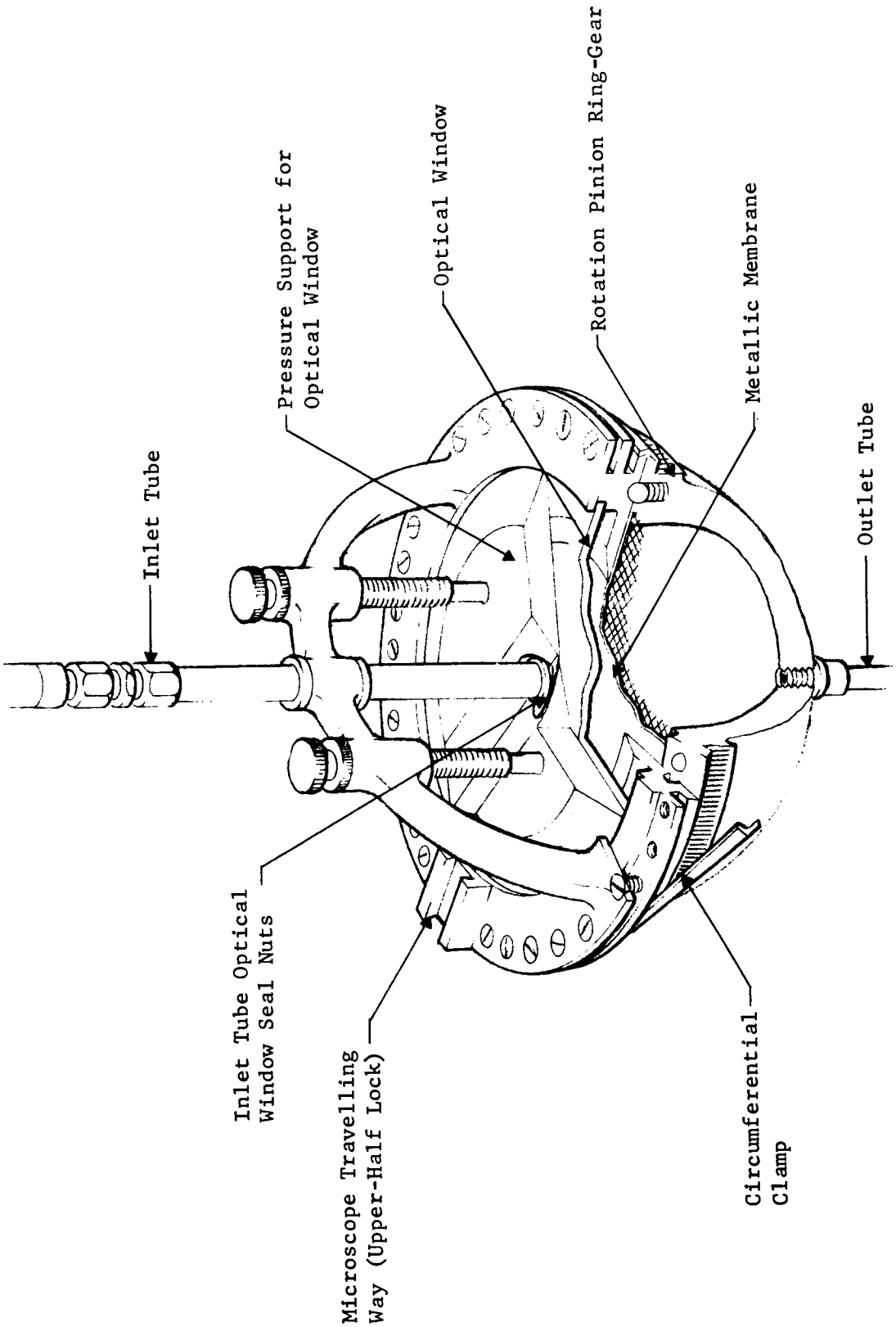

Fig. A-2 High-Pressure ILFHC Chamber

The chamber will not exceed 6 inches in any dimension except for the axial dimensions of the inlet and outlet tubes (which project out of the cryogenic refrigeration dewar and whose lengths, consequently, are not critical).

The chamber shall be made essentially of cast and sheet-stock aluminum and should weigh not more than 10 pounds.

The effective filtration surface will be approximately 7 square inches which is approximately 3 1/2 times that afforded by a 47 mm membrane in the high pressure membrane holders used presently.

Figure A-3 shows the holding cylinder for the filtration/counting chamber, the attached microscope, microscope mount, traversing and focusing assembly, the rotational worm crank, and a phantom view of the rotation worm assembly for additional clarity of detail. The lower half circumferential seal flange of the filtration/counting chamber bears on the support shoulder forming the planar top of the holding cylinder. By this arrangement the rotating ring gear of the former engages with the rotating worm gear of the latter.

Not shown in this view are provisions for artificial lighting of the microscope field-of-view which should be incorporated in the prism chamber to project this light only on the microscopic field. Battery power pack for this light, if used, or the transformer should be located on the side of the holding cylinder opposite the microscope mount to provide weight balance to the holding cylinder. It is estimated that the longest dimension of the fixture (exclusive of the axial length of the support cylinder) will not exceed 14 inches. This dimension will extend from the tip of the microscope traversing worm crank knob to a point on a line through the axis of the support cylinder and located on the outer surface of the battery power pack or transformer (not shown).

The axial length of the support cylinder is not limited and its exact configuration will depend on the type of physical support required for the entire ILFHC composite.

For example, tripod legs can be attached to the cylinder; a bottom flange may be attached which will fasten to the top of the carrying case; the cylinder may be slotted to accept a mounting fixture permanently located at each sampling

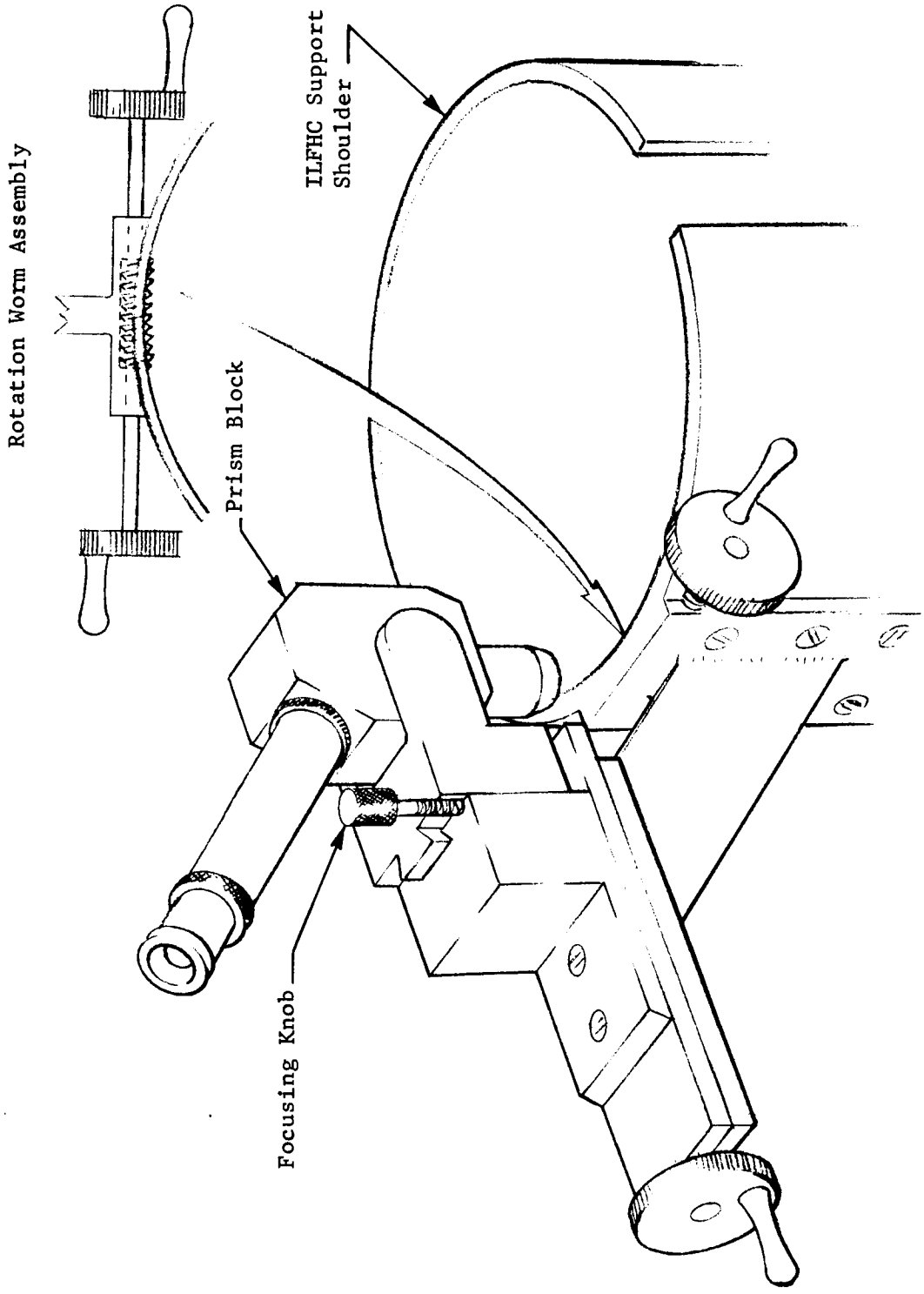

Fig. 3 Pictorial View of Microscope Fixture for High-Pressure ILFHC

point, etc. It would therefore be premature to further limit the configuration of the support cylinder in this description.

If it is assumed that the support cylinder without a bottom flange is not longer than 18 inches, the resultant fixture weight, including microscope, will be less than 15 pounds.

Figure A-4 shows a double-walled insulating jacket used to effect cool down of the ILFHC preparatory to filtration of LO_2, LN_2, or LH_2.

This device, hinged on one side, is closed around the ILFHC chamber and seals to it by semi-cylindrical elastomeric inserts in the dewar halves which compress against the inlet and outlet tubes of the filtration/counting chamber. Cryogen is then allowed to flow through the annular space between the chamber and the dewar until the chamber temperature is at the boiling point of the cryogen, after which sample flow is commenced through the filtration/counting chamber.

Not shown in this illustration is a liquid sensor to be installed at the top of the dewar half which carries the outlet port. This sensor is essentially a gas bulb thermometer filled with the gaseous product. It indicates when the dewar is filled to the top with liquid. This indication, together with empirical data obtained from the prototypes, will determine when sample flow through the filtration/counting chamber should commence.

It is estimated that the diameter of the dewar will be approximately eight inches (the mating-flange diameter will be approximately 10 in.), and will weigh no more than 10 lb.

Figure A-5 shows an artist's conception of the ILFHC, with attached microscope, in use. The relative size of the device is apparent from this drawing. Note that the upper chamber half rotational lock is engaging the upper microscope travelling way. This serves to prevent rotational movement of the upper chamber-half with respect to the microscope when the lower chamber-half is rotated.

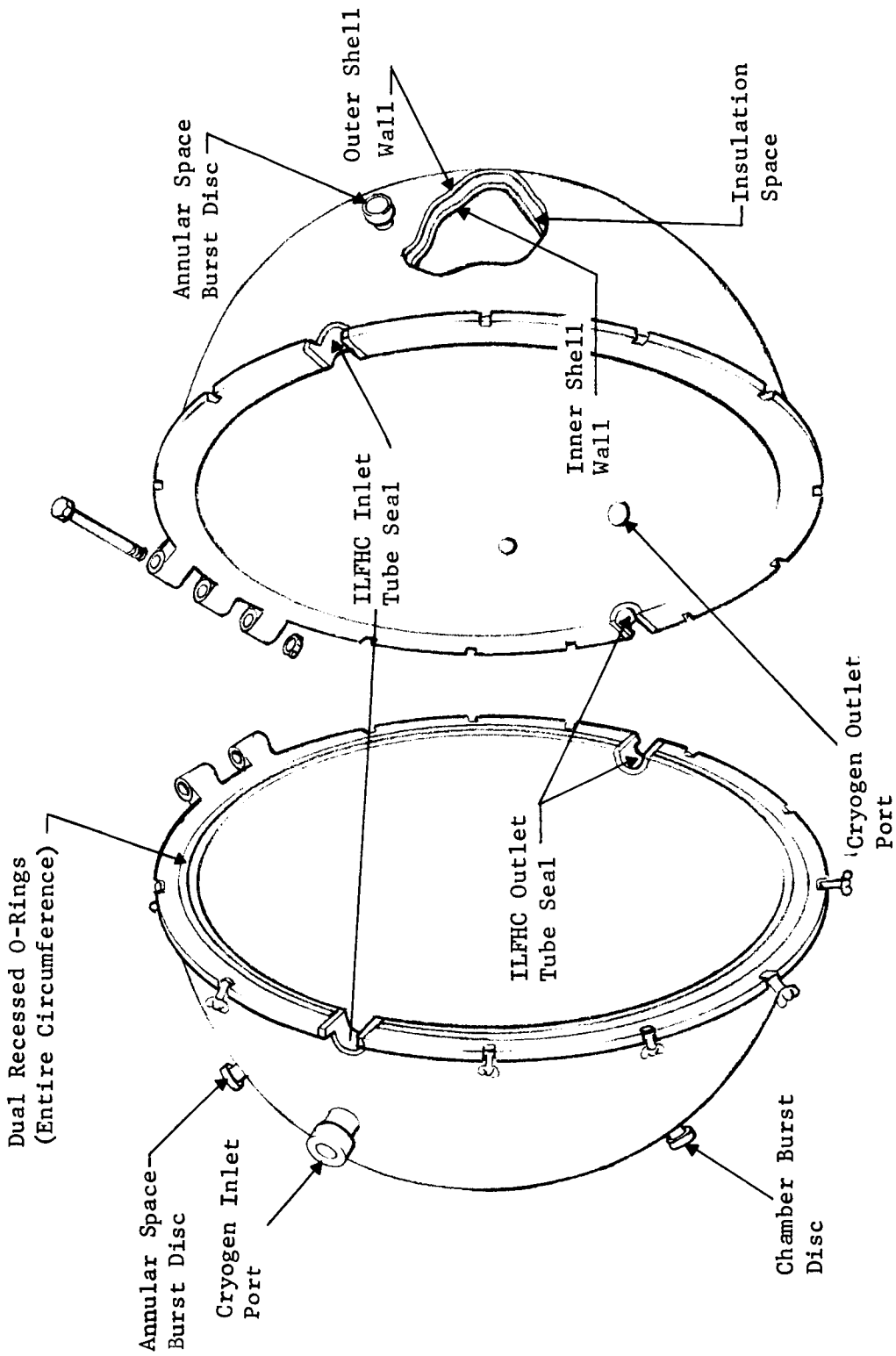

Fig. A-4 ILFHC Cryogenic Refrigeration Dewar

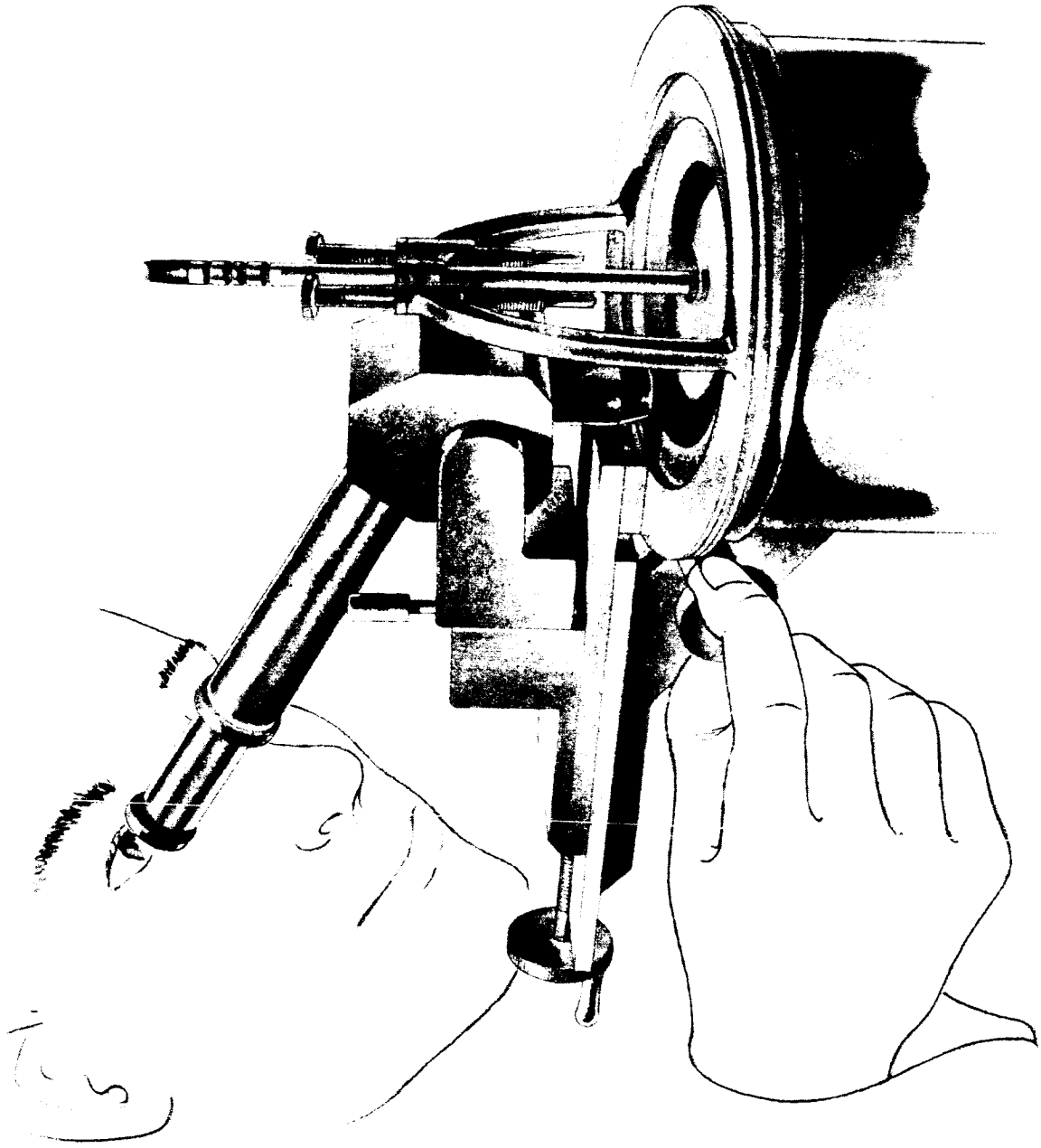

Fig. A-5 ILFHC in Use with Attached Microscope