THE DETERMINATION OF ASYMPTOTIC AND PERIODIC BEHAVIOR OF DYNAMIC SYSTEMS ARISING IN CONTROL SYSTEM ANALYSIS

APRIL 1966

FINAL REPORT

ER 14229

E. Lefferts & E. Moshang

Contract No. NAS 8-20002
National Aeronautics and Space Administration

Martin Company
Baltimore Division

TABLE OF CONTENTS

Summary		i
I	Introduction	1
II	Perturbation Method	8
III	Piecewise Linearization	20
IV	Frequency Response	42
V	Boundedness	63
VI	Conclusions and Recommendations	74
Appendices		
A	Bibliography and References	76
B	Automatic Synthesis Program (ASP)	98
C	Construction of a Liapunov Function	100
D	Transformation of Companion Form	106
E	Application of QO 002 Program	110
F	Computation of the Transition Matrix	116

Summary

The primary objective is this investigation was to determine a technique or combination of techniques from which the asymptotic behavior of a nonlinear control system may be predicted. The four main approaches considered in this report lend themselves to the determination and/or identification of limit cycles or obtaining a bound on the solution to the system. These approaches are:

1) Small Perturbation: The perturbation method, as the name implies, is limited to systems that are weakly nonlinear. This approach determines the periodic solution of the system by expanding it in a Taylor series expansion in a small parameter. The results obtained by this approach yield precise quantitative information for the particular nonlinearity. However, it does not give information pertaining to the general system. This technique may be utilized to verify the existence of periodic solutions that are predicted by other methods.

2) Piecewise Linearization: This technique approximates the nonlinearity by linear segments and thereby dividing the phase space by hyperplanes. The general system is reduced to a set of linear differential equations in sections of the phase space. In order to obtain a periodic solution, a hyperplane is mapped into itself. This technique is the most general procedure for determining periodic solutions for systems with large nonlinearities. However, in order to identify the periodic solution, a set of transendental equations

equations must be solved, and a priori knowledge of the order in crossing the hyperplanes must be known. Both limitations are severe, but maybe circumvented by the use of the ASP digital program. This program may be used so that the initial state vector is continually mapped until the solution approaches itself. This approach performs quite well when the limit cycle is stable.

3) Frequency Response Methods: The methods considered in this approach were the standard describing function representation of the nonlinearity, and the application of Popov's criteria. It was found that though the describing function technique is easy to apply, and is capable of handling high order systems, there exists the lack of assurance as to the validity of the results of any given problem. Popov's criteria which is also applicable to higher order systems and is easy to apply, unfortunately, yields only sufficient conditions for the system to be gobally asymptotically stable. However, the criteria when applicable does include a class of nonlinearities, where as the describing function handles only a specific one.

4) Boundedness: In the utilization of the concept of Lagrange stability or boundedness, the techniques of Popov's criteria and Liapunov's second method were combined to obtain bounds on the system. In general these methods are applied individually tc determine asymptotic stability. The advantage of this combined technique over the other is that all previously mentioned approaches are limited to the determination and/or

identification of limit cycles. This technique is capable of determining a bound even if the solutions to the system are almost periodic or enter a limit set. However the bounds obtained by this technique does depend on the choice of the Liapunov function and how the norm of a vector is defined. The construction of the Liapunov function in this investigation applied to those systems which had the representation of Lurés canonical form. By constructing a different V - function or defining the norm differently, the bounds on the system may be altered.

INTRODUCTION

In order to study the behavior of a launch vehicle control system, it is desirable to consider the effects of all nonlinearities, to be certain no adverse effects are overlooked. Previously, the nonlinearities which may arise from bending modes, fuel slosh modes, or from the control system itself, has been linearized and then the system was analyzed for stability and performance. Unfortunately, the nonlinearities which may cause self-sustained oscillations will not be predicted by linear analysis.

Techniques have been developed for which the nonlinearity may be considered, or approximated, in the analysis of the system. The primary objective of this investigation was to determine a technique or combination of techniques which may be utilized in the prediction and identification of a limit set and/or limit cycle. It has been found that the various approaches that are applicable may be classified in five separate categories. Though classified in this manner, mathematically they are related. The basic methods are: 1) Small Perturbation Techniques, 2) Piecewise Linearization 3) Frequency Response Methods 4) Boundedness and Lagrange Stability 5) Phase Plane and Topological Methods. In this classification process (5) pertains primarily to graphical procedures for obtaining a solution to second order nonlinear autonomous systems. It was felt that this is too restrictive and was not considered. In the development of a technique Chapters II to V discuss the remaining methods along with their limitations. Consideration was also given to

the ease of application, generality in use, and accuracy, in each of the approaches.

In order to demonstrate the various techniques, the mathematical model selected represented a simplified rigid body vehicle with one slosh mode, whose damping coefficient represented the nonlinearity of the system. A detailed description of this model is presented in the next section of the text.

Description of Mathematical Model

The mathematical model which will be used throughout this report to demonstrate the various techniques represents a simplified slosh mode of a booster vehicle. The effects of bending, engine swivel, aerodynamic forces have been neglected, since the purpose of the model is to demonstrate various techniques for a nonlinear system which is higher than second order. The numerical values associated with this model are hypothetical and where furnished by NASA, George C. Marshall, Space Flight Center.

The equations describing the system are the following:

Translatory Dynamics:

$$m\ddot{z} + \sum_i (m_{si}\zeta_i) = F\phi + TB$$

Attitude Dynamics:

$$I\phi - \sum_i (m_{si}x_{si}\ddot{\zeta}_i + m_{si}(F/m)\zeta_i) = -TBX_E$$

Sloshing Mass Dynamics:

$$\ddot{\zeta}_i + 2f(\zeta_i)\omega_{si}\dot{\zeta}_i + \omega_{si}^2\zeta_i + \ddot{z} - x_{si}\ddot{\phi} - (F/m)\phi = 0$$

Control Equation:

$$B = a_0\phi + a_1\dot{\phi}$$

The definition of the symbols and their associated numerical values are tabulated below:

Symbol	Definition	Value
m	Mass of the vehicle	6.35×10^3
m_{si}	i^{th} sloshing mass	216
F	Thrust Vector	3.175×10^4
T	Control Thrust	3.175×10^4
I	Effective Moment of Inertia of the Total Vehicle about its c.g.	2.1×10^5
x_{si}	Coordinate of i sloshing mass	5/3
x_ε	Coordinate of swivel point	6
$f(\zeta_i)$	Damping of propellant	To be defined
ω_{si}	Natural frequency of oscillating propellant	1.5
a_0	Gain Constant	1.4
a_1	Gain Constant	1.0

The following figure will indicate the system coordinates:

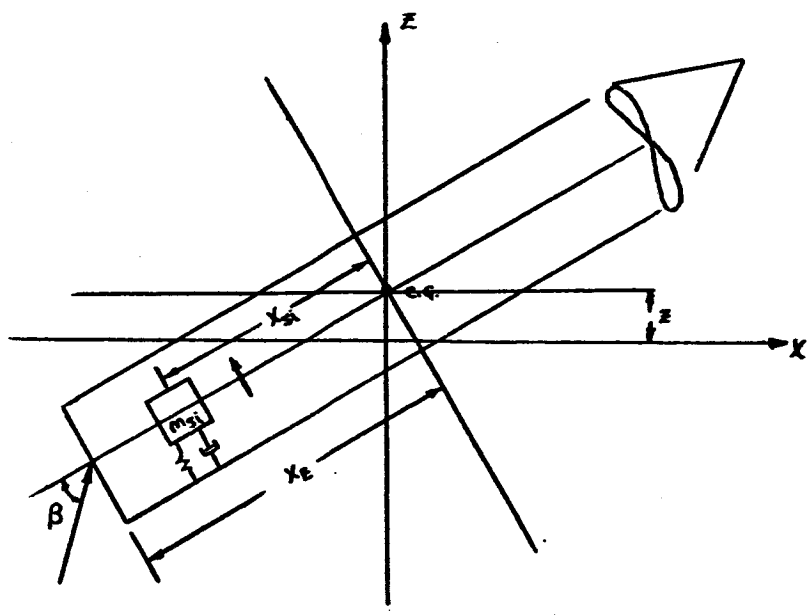

The above equations may be simplified, by considering one sloshing mass, and reduced to two coupled second order equations, which are

$$\left[I(1-m_s/m)-m_s X_s^2\right]\ddot{\zeta} = \left[m_s X_s F/m - I\omega_s^2\right] - 2\omega_s I f(\zeta)\dot{\zeta} - T\left[a_0\phi + a_1\dot{\phi}\right]\left[I/m + X_E X_s\right] \qquad \text{I-1}$$

$$\left[I(1-m_s/m)-m_s X_s^2\right]\ddot{\phi} = \left[m_s/m\,(1-m_s/m)F - \omega_s^2 m_s X_s\right]\zeta - 2\omega_s m_s X_s f(\zeta)\dot{\zeta} - T\left[a_0\phi \quad a_1\dot{\phi}\right]\left[m_s X_s/m + X_E(1-m_s/m)\right] \qquad \text{I-2}$$

Numerically,

$$\ddot{\zeta} = -2.325\zeta - 3.112 f(\zeta)\dot{\zeta} - 6.745\phi - 9.458\dot{\phi} \qquad \text{I-3}$$

$$\ddot{\phi} = 0.00115\zeta - 0.00533 f(\zeta)\dot{\zeta} - 0.917\phi - 1.285\dot{\phi} \qquad \text{I-4}$$

The nonlinearity appearing in the slosh equation, represented by is defined in the following manner.

$$f(\zeta) = 0.001 \quad , \quad 0 \le |\zeta| \le .301$$

$$f(\zeta) = 2\zeta^2 - |\zeta|(.602) + 0.001 \quad , \quad |\zeta| > .301$$

System equations I-3, and I-4, may be transformed to Lure's canonical form of

$$\dot{x} = Ax + bF(\sigma) \qquad \text{I-5}$$

$$\sigma = c^T x$$

where A is a 4 x 4 matrix, b and c^T are real vectors. The state vector is defined as

$$
\begin{aligned}
x_1 &= \zeta \\
x_2 &= \dot{\zeta} + 3.112 \int_0^{\sigma} f(u)\,du \\
x_3 &= \phi \\
x_4 &= \dot{\phi} + (.00533) \int_0^{\sigma} f(u)\,du
\end{aligned}
$$

Numerically:

$$
A = \begin{bmatrix} 0 & 1 & 0 & 0 \\ -2.325 & 0 & -6.745 & -9.458 \\ 0 & 0 & 0 & 1 \\ 0.00115 & 0 & -0.917 & -1.285 \end{bmatrix}
$$

$$
b^T = \begin{bmatrix} -3.112 & 0.010876 & -0.00533 & 0.00685 \end{bmatrix}
$$

$$
c^T = \begin{bmatrix} 1 & 0 & 0 & 0 \end{bmatrix}
$$

The block diagram representing the system is then

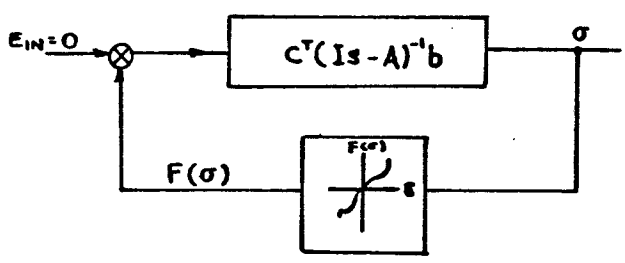

where $c^T(Is-A)^{-1}b$ is the open loop transfer function and $F(\sigma)$ is the integral of the nonlinearity. Numerically,

$$F(\sigma) = 0.001\,\sigma \quad , \quad 0 \le |\sigma| \le .301$$

$$F(\sigma) = 2\left(\sigma^3/3 - |\sigma|\,\sigma\,(.301)/2\right) + .001 + .009 \,, \qquad \text{I-6}$$

$$|\sigma| > .301$$

and

$$c^T(Is-A)^{-1}b = \frac{3.112\,S^3 + 3.948\,S^2 + 2.8012\,S}{S^4 + 1.285\,S^3 + 3.242\,S^2 + 2.998\,S + 2.139} \qquad \text{I-7}$$

In the application of the various techniques, the primary equations of interest will be either I-3, I-4, or I-5. However, modifications will occur with the applications of each technique, and will be noted in the individual section under "application".

II. PERTURBATION METHODS

A. Theory

By the term perturbation methods we mean any procedure for finding periodic solutions to weakly nonlinear systems by the expansion of the solution into a Taylor series in a small parameter. Such procedures were originally due to Poincare (11) and have been generalized by Hale (10) and others. In Russia such methods are generally known as the method of harmonic balance. The theory of such procedures is best explained within the framework of Hale's work, although his method may not be the easiest to apply in specific applications.

Consider the describing equations in the canonical form

$$\begin{aligned} \dot{X}_1 &= \epsilon F_1(X_1, X_2, t, \epsilon) \\ \dot{X}_2 &= A X_2 + \epsilon F_2(X_1, X_2, t, \epsilon) \end{aligned} \qquad \text{II-1}$$

where X_1 and F_1 are assumed to be P vectors while X_2 and F_2 are assumed to be n-p dimensional vectors. It is assumed that both F_1 and F_2 are periodic of period T. It is farther assumed that A is such that no solution of the system

$$\dot{Y} = AY \qquad \text{II-2}$$

is periodic of period T except the solution

The problem posed by Hale was to find conditions on the vectors F_1 and F_2 sufficient to ensure the existence of a periodic solution of II-1 which is continuous in ϵ . In addition an algorithm is sought to obtain such a solution if one exists. The procedure developed by

Hale is basically an iterative one. For $\epsilon = 0$, we have the periodic solution

$$x_1 = C$$
$$x_2 = 0$$

where C is a constant vector as yet unspecified. A natural procedure is to start with this solution and proceed as in the Picard iterative scheme and generate the sequence of approximations

$$x_1^0 = C$$
$$x_2^0 = 0$$

$$\begin{aligned} x_1^1 &= C + \epsilon \int^t F_1(C, 0, u, \epsilon)\, du \\ x_2^1 &= \epsilon \int^t F_2(C, 0, u, \epsilon)\, du \\ &\vdots \\ x_1^{n+1} &= C + \epsilon \int^t F_1(x_1^n, x_2^n, u, \epsilon)\, du \\ x_2^{n+1} &= \epsilon \int^t F_2(x_1^n, x_2^n, u, \epsilon)\, du \end{aligned} \qquad \text{II-3}$$

In each nth step of iteration only terms in ϵ of the nth order will be retained.

Under suitable hypotheses upon the functions F_1 and F_2 the convergence of the above sequence can be proven. Although the final solution may possess all the desired periodic properties, there is no assurance that successive approximations possess these properties. To circumvent these difficulties Hale considers the sequence

$$
\begin{aligned}
X_1^0 &= C \\
X_2^0 &= 0
\end{aligned}
$$

$$
\begin{aligned}
X_1^1 &= C + \epsilon(I-P_0)\int^t F_1(C,0,u,\epsilon)\,du \\
X_2^1 &= \epsilon(I-P_0)\int^t F_2(C,0,u,\epsilon)\,du \\
&\vdots \\
X_1^{n+1} &= C + \epsilon(I-P_0)\int^t F_1(X_1^n, X_2^n, u, \epsilon)\,du \\
X_2^{n+1} &= \epsilon(I-P_0)\int^t F_2(X_1^n, X_2^n, u, \epsilon)\,du
\end{aligned}
\qquad \text{II-4}
$$

where the symbol Po operating on the integral extracts the average value. Thus

$$
P_0\int^t F(x,u,\ )\,du = \frac{1}{T}\int_t^{t+T} F(x,u,\ )\,du \qquad \text{II-5}
$$

This sequence under suitable hypotheses upon the functions F_1 and F_2 converge to the solutions

$$
\begin{aligned}
X_1 &= C + \epsilon(I-P_0)\int F_1(X_1, X_2, u, \epsilon)\,du \\
X_2 &= \epsilon(I-P_0)\int F_2(X_1, X_2, u, \epsilon)\,du
\end{aligned}
\qquad \text{II-6}
$$

Observe that these are not solutions of the original system of differential equations. If the initial vector C is chosen such that

$$
\begin{aligned}
P_0\int F_1(X_1(C,u), X_2(C,u), u, \epsilon)\,du &= 0 \\
P_0\int F_2(X_1(C,u), X_2(C,u), u, \epsilon)\,du &= 0
\end{aligned}
\qquad \text{II-7}
$$

then the solution II-6 becomes solutions to the original equation II-1.

The set II-7 are called the determining equations and their solution is necessary for the existence of a periodic solution to II-1.

In practice one settles for an approximate solution given by the kth term of II-4 where only powers up to the kth in ϵ are retained.

For the identification of periodic solutions of autonomous systems, one must first transform the describing equations into the form II-1. Consider the real system of autonomous equations

$$\dot{X} = AX + F(X_1) \qquad \text{II-8}$$

We will assume that A is in the form $A = \text{diag}(A_1, A_2)$ where A_1 is a p x p matrix such that every solution of

$$\dot{X}_1 = A_1 X \qquad \text{II-9}$$

is periodic of a common period T. A_2 is a n - p x n - p matrix such that no solution except $X_2 = 0$ of

$$\dot{X}_2 = A_2 X \qquad \text{II-10}$$

is periodic of period T.

Thus the matrix A_1 must be of the form $A_1 = \text{diag}(O_k, C_1, \ldots C_m)$ where O_k is a k x k zero matrix while each C_i is of the form

$$C_i = \begin{bmatrix} 0 & 1 \\ -r_i^2\omega_0^2 & 0 \end{bmatrix} \qquad \text{with } r_i \text{ rational.}$$

Thus the matrix A_1 depends upon ω_0 and may be written as $A_1(\omega_0^2)$ while the period T may all be written as $T(\omega_0)$. If we define the true frequency

$$\omega^2 = \omega_0^2 + \epsilon\beta$$

where β is to be defined, and make the transformation of variables

$$X_1 = e^{A_1(\omega^2)t} Y_1$$
$$X_2 = Y_2 \qquad \text{II-11}$$

we obtain

$$\dot{Y}_1 = \epsilon e^{-A_1(\omega^2)t} F_1(e^{A_1(\omega^2)t} Y_1, Y_2, \epsilon) - \epsilon e^{-A_1(\omega^2)t} A_1^*(\beta) e^{A_1(\omega^2)t} Y_1$$
$$\dot{Y}_2 = A_2 Y_2 + \epsilon F_2(e^{A_1(\omega^2)t} Y_1, Y_2, \epsilon) \qquad \text{II-12}$$

where we have defined

$$A_1(\omega_0^2) - A_1(\omega_0^2 + \epsilon\beta) = - A_1^*(\beta)$$

Thus we obtain a system in the form of II-1 and Hale's method may now be applied.

In general the functions F_1 and F_2 in II-1 are assumed to be continuous in ϵ, satisfy a Lipschitz condition in X_1 and X_2 and be integrable with respect to t. This is sufficient to ensure the validity of the procedure providing ϵ is sufficiently small.

In the application of such procedures to specific problems it is not necessary to transform to Hale's canonical form, but one may proceed directly in assuming a solution in terms of a series in the parameter ϵ. Direct methods for finding periodic solutions for autonomous systems with small nonlinearities due to Krylov and Bogoliubov (45) are equivalent to the procedure outlined above. The amplitude of the resulting solution is made to depend upon the average value of the nonlinear function evaluated at the periodic solution.

B. Application:

For the purpose of demonstrating the small perturbation technique without unduly complicating the presentation with the details of computations, the nonlinearity in equations I-3, I-4, was approximated by a least square fit. However this technique may be applied to the existing nonlinearity except that the equations will valid over the piecewise segments of $0 \leq |\xi| \leq .3$ and $|\xi| > .3$. This would mean repeating this technique over each region of concern and will defeat the purpose of this example. By approximating the nonlinearity, the region of concern is now extended to $0 \leq |\xi| \leq .6$.

The data points are tabulated below and the approximate nonlinearity will be defined as $h(x)$.

X	Actual Nonlinear Values
.1	.001
.2	.001
.3	.001
.4	.08
.5	.20
.6	.36

$$h(x) = .001 - 1.03x^2 + 3.21x^4$$
$$= \epsilon(a_0 + a_1x^2 + a_2x^4) = \epsilon g(x)$$

where $\epsilon = .001$.

Equations I-3, I-4, may be represented as:

$$\ddot{X} + 2.325X + 6.745Y + 9.458\dot{Y} = -3.112\,\epsilon\, g(x)\,\dot{x} \qquad \text{II-13}$$

$$\ddot{Y} + 1.285\dot{Y} + 0.917Y = \epsilon\left\{1.15X - 5.33\,\epsilon\, g(x)\,\dot{x}\right\} \qquad \text{II-14}$$

The solutions to the above equations may be represented as

$$X = X_0 + \epsilon X_1 + \epsilon^2 X_2 + \cdots + \epsilon^n X_n$$
$$Y = Y_0 + \epsilon Y_1 + \epsilon^2 Y_2 + \cdots + \epsilon^n Y_n$$
$$\omega^2 = \omega_0^2 + \epsilon\omega_1^2 + \epsilon^2\omega_2^2 + \cdots + \epsilon^n\omega_n^2$$

Consider, for the present, only the terms up to ϵ^2, equations II-13 and II-14 may then be represented as:

$$(\ddot{X}_0 + \epsilon\ddot{X}_1 + \epsilon^2\ddot{X}_2) + \omega_0^2 X_0 + \epsilon(\omega_1^2 X_0 + \omega_0^2 X_1) + \epsilon^2(\omega_2^2 X_0 + \omega_1^2 X_1 + \omega_0^2 X_2)$$
$$+ 6.745(Y_0 + \epsilon Y_1 + \epsilon^2 Y_2) + 9.458(\dot{Y}_0 + \epsilon\dot{Y}_1 + \epsilon^2\dot{Y}_2)$$
$$= -3.112\,\epsilon(a_0\dot{X}_0 + a_1 X_0^2\dot{X}_0 + a_2 X_0^4\dot{X}_0)$$
$$- 3.112\,\epsilon^2(2X_1X_0\dot{X}_0 + 4X_1X_0^3\dot{X}_0 + a_0\dot{X}_1 + a_1X_0\dot{X}_1)$$

$$(\ddot{Y}_0 + \epsilon\ddot{Y}_1 + \epsilon^2\ddot{Y}_2) + 1.285(\dot{Y}_0 + \epsilon\dot{Y}_1 + \epsilon^2\dot{Y}_2) + 0.917(Y_0 + \epsilon Y_1 + \epsilon^2 Y_2)$$
$$= 1.15\,\epsilon X_0 - 1.15\,\epsilon^2\left[X_1 + 4.63(a_0\dot{X}_0 + a_1X_0^2\dot{X}_0 + a_2X_0^4\dot{X}_0)\right].$$

By equating the coefficients in terms of powers of ϵ yields the following equations:

$$\ddot{X}_0 + \omega_0^2 X_0 + 6.745\, Y_0 + 9.458\, \dot{Y}_0 = 0 \qquad \text{II-15}$$

$$\ddot{Y}_0 + 1.285\, \dot{Y}_0 + 0.917\, Y_0 = 0 \qquad \text{II-16}$$

$$\ddot{X}_1 + (\omega_1^2 X_0 + \omega_0^2 X_1) + 6.745\, Y_1 + 9.458\, \dot{Y}_1 \qquad \text{II-17}$$

$$= -3.112\,(a_0 \dot{X}_0 + a_1 X_0^2 \dot{X}_0 + a_2 X_0^4 \dot{X}_0)$$

$$\ddot{Y}_1 + 1.285\, \dot{Y}_1 + 0.917\, Y_1 = 1.15\, X_0 \qquad \text{II-18}$$

$$\ddot{X}_2 + (\omega_2^2 X_0 + \omega_1^2 X_1 + \omega_0^2 X_2) + 6.745\, Y_2 + 9.458\, \dot{Y}_2 \qquad \text{II-19}$$

$$= -3.112\,(2 X_1 X_0 \dot{X}_0 + 4 X_1 X_0^3 \dot{X}_0 + a_0 X_1 + a_1 X_0 \dot{X}_1)$$

$$\ddot{Y}_2 + 1.285\, \dot{Y}_2 + .917\, Y_2 = -1.15\,(X_1 + 4.63\,(a_0 X_0 + a_1 X_0^2 \dot{X}_0 + a_2 X_0^4 \dot{X}_0) \qquad \text{II-20}$$

The number of equations will increase as higher powers of ϵ are considered.

For ϵ raised to the zeroth power, the periodic solutions to Y_0 and X_0 are

$$X_0 = A \cos(\omega_0 t + \phi)$$
$$Y_0 = 0$$

Substituting these solutions into the next set of equations (II-17, II-18), the periodic solution to Y_1 has the form

$$Y_1 = A_1 \cos(\omega_0 t + \phi) + B_1 \sin(\omega_0 t + \phi)$$

where $$A_1 = \frac{(\omega_0^2 - 1)(1.15)A}{-\omega_0^4 + .35\,\omega_0^2 - 1}$$

and $$B_1 = \frac{-1.285\,\omega_0(1.15A)}{-\omega_0^4 + .35\,\omega_0^2 - 1}$$

By substituting in the know solutions Y_1, $\dot{Y}_1$, X_0, $\dot{X}_0$ into equation II-17 and rearranging terms, the differential equation involving X_1 is $\ddot{X}_1 + \omega_0 X_1 = f(t)$

where the forcing function f(t) contains the known solutions of Y_1, $\dot{Y}_1$, X_0, $\dot{X}_0$. Specifically, the forcing function is:

$$-\omega_1^2 X_0 = -\omega_1^2 A \cos(\omega_0 t + \phi)$$

$$-6.745\,Y_1 = -6.745\left(A_1 \cos(\omega_0 t + \phi) + B_1 \sin(\omega_0 t + \phi)\right)$$

$$-9.458\,\dot{Y}_1 = 9.458\,\omega_0\left(A_1 \sin(\omega_0 t + \phi) - B_1 \cos(\omega_0 t + \phi)\right)$$

$$-3.112\,a_0 \dot{X}_0 = 3.112\,a_0 A\,\omega_0 \sin(\omega_0 t + \phi)$$

$$-3.112\,a_1 X_0^2 \dot{X}_0 = 3.112\,a_1 A^3 \omega_0/4 \left[\sin(\omega_0 t + \phi) + \sin 3(\omega_0 t + \phi)\right]$$

$$-3.112\,a_2 X_0^4 \dot{X}_0 = 3.112\,a_2 A^5 \omega_0/8 \left[\sin(\omega_0 t + \phi) + \frac{3}{2}\sin 3(\omega_0 t + \phi) + \frac{\sin 5}{2}(\omega_0 t + \phi)\right]$$

and the solution to the homogenous equation of X_1 is

$$X_1 = K_1 \cos(\omega_0 t + \phi).$$

In order to prevent resonance, the coefficients of the forcing function

which has the same frequency as ω_0 must be set equal to zero. This results in the following equations, which involve ω_1 and the amplitude A.

$$-\omega_1^2 A - 6.745 A_1 - 9.458 \omega_0 B_1 = 0$$

$$-6.745 B_1 - 9.458 A_1 \omega_0 + 3.112 a_0 A \omega_0 + \frac{3.112}{4} a_1 A^3 \omega_0 + \frac{3.112}{8} a_2 A^5 \omega_0 = 0$$

Since the relation of A_1, B_1 are known functions of A, the above equations are reduced to

$$\omega_1^2 = \frac{5.92\omega_0^2 + 7.75}{-\omega_0^4 + .35\omega_0^2 - 1} = -3.86$$

$$A\left(A^4 - .164 A^2 + 5.93(10^{-3})\right) = 0$$

The amplitude A is then $0, \pm 0.331, \pm .234$

Since $\omega_0^2 = \omega^2 - \epsilon\omega_1^2$, the approximate value of ω_0 is:

$$\omega_0 = \omega\left[1 - \epsilon\left(\frac{\omega_1}{\omega}\right)^2\right]^{1/2} = \left[1 + \epsilon(1.66)\right]^{1/2}$$

$$\omega_0 \cong \left[1 + \epsilon(1.66)/2\right]$$

$$\omega_0 = 1.52583$$

By continuing this sequence of computations the complete solution for X, Y, and ω_0 may be found as accurately as one

desires. In this example, the amplitude (A) of this approximate solution differs from the other examples, but this is due to the approximation of the nonlinearity by the least square fit.

C. Limitations

The main premise underlying all perturbation methods is that the deviation of the system from linearity is small. Thus such procedures are restricted to nearly linear systems. For large values of the parameter ϵ, one can no longer be assured that any of such procedures will converge.

In terms of the practical implementation of these methods where they are applicable one is confronted with the growth of the numerical computations which expand geometrically with the dimension of the system. In practice one generally restricts himself to obtaining at most terms of second order in the parameter.

The second main limitation to the method is that it in general enables one to obtain precise quantitative information about a specific system and gives little qualitative information about general systems. Thus one may obtain as accurately as one desires the amplitude or wave shape and frequency of a limit cycle but not know how sensitive the frequency or amplitude to a parameter variations in the system.

The main utility of such procedures is to verify the existence of periodic solutions predicted by other methods and to check the stability of such predicted solutions. Once approximate solutions are found for systems with large nonlinearities, they may be refined by perturbation methods.

III. PIECEWISE LINEARIZATION AND POINT TRANSFORMATION

A. Theory

For systems with large nonlinearities and of high dimension, perturbation methods are of little value in determining asymptotic behavior. The only general available tools are those of piecewise linearizations and describing functions. In the former method, the nonlinearities are piecewise approximated by linear segments and the nonlinear equations are replaced by a system of linear equations each of which is valid in a portion of the phase space bounded by hyperplanes. To obtain a periodic solution a hyperplane is mapped by the system of linear equations into itself. The requirement for a fixed point under this mapping gives rise to the existence of a periodic solution.

For this method we may assume a system in the canonical form

$$\begin{aligned} \dot{x} &= Ax + BY \\ Y &= F(\sigma) \\ \sigma &= c^T x \end{aligned} \qquad \text{III-1}$$

where A is an n x n matrix, B and C are n x 1 vectors and $F(\sigma)$ a scalar nonlinear function. It is assumed that $F(\sigma)$ may be approximated by the system of straight lines.

$$F(\sigma) = \begin{cases} k_{-i}\sigma + G_{-i} & -\sigma_{-(n+1)} < \sigma \leq -\sigma_n \\ \vdots & \\ k_{-1}\sigma + G_{-1} & -\sigma_{-j} \leq \sigma \leq -\sigma_{-1} \end{cases}$$

$$K_0\sigma \qquad\qquad -\sigma_{-1} \le \sigma \le \sigma_1$$
$$K_1\sigma + G_1 \qquad\qquad \sigma_1 \le \sigma \le \sigma_2$$
$$\vdots$$
$$K_j\sigma + G_j \qquad\qquad \sigma_j \le \sigma \le \sigma_{j+1}$$

In each region S_i of the phase space between the hyperplanes H_i given by $\sigma = \sigma_i$ and H_{i+1} given by $\sigma = \sigma_{i+1}$ III-1 may be approximated by the linear set of equations

$$\dot{X} = (A + K_i BC^T)X + G_i B \qquad \text{III-2}$$

The solution of III-2 in S_i is given by

$$X = e^{A_i(t-t_k)}X(t_k) + \int_{t_k}^{t} e^{A_i(t-\tau)} G_i B\, d\tau \qquad \text{III-3}$$

where

$$A_i = (A + K_i BC^T) \qquad \text{III-4}$$

This solution may be continued until some time t_{k+1} where the solution intersects one of the two hyperplanes H_i or H_{i+1}. The time t_{k+1} is then given by the equation

$$c^T X(t_{k+1}) = c^T e^{A_i(t_{k+1}-t_k)} X(t_k) + \int_{t_k}^{t_{k+1}} c^T e^{A_i(t_{k+1}-\tau)} G_i B\, d\tau$$
$$= \sigma_{i+1} \text{ or } \sigma_i \qquad \text{III-5}$$

In the above equation we must account for the intersection of the solution with the hyperplane H_{i+1} or the hyperplane H_i.

In order to obtain a periodic solution for this scheme it is imperative to know the order of traversing the hyperplanes. For illustrative purposes assume we start at $t = 0$ on the hyperplane H_1 and further assume the solution traverses the hyperplanes H2 Ha H1 H-1 H-2 H-2 H-1 H1 in the given order

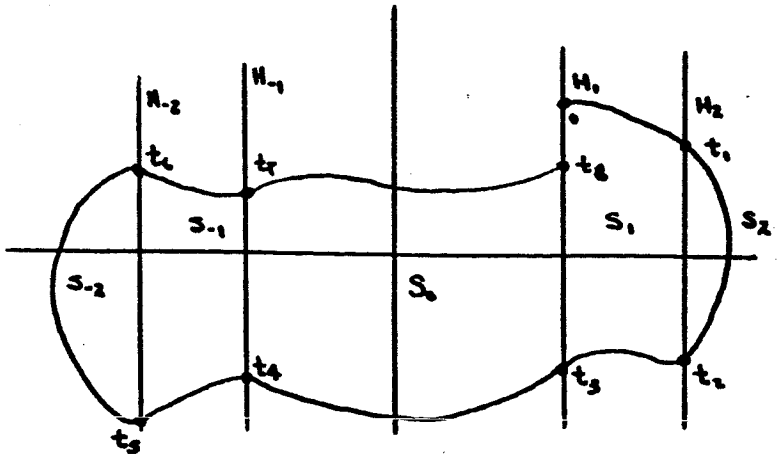

In order to obtain a periodic solution we must obtain the mapping from the hyperplanes H1 through the hyperplanes in the indicated order. The intersection of the trajectory with the given hyperplanes gives the eight equations

$$
\begin{aligned}
X(t_1) &= e^{A_1 t_1} X(0) + \int_0^{t_1} e^{A_1(t_1-\tau)} G_1 B\, d\tau \\
X(t_2) &= e^{A_2(t_2-t_1)} X(t_1) + \int_{t_1}^{t_2} e^{A_2(t_2-\tau)} G_2 B\, d\tau \\
X(t_3) &= e^{A_1(t_3-t_2)} X(t_2) + \int_{t_2}^{t_3} e^{A_1(t_3-\tau)} G_1 B\, d\tau \\
X(t_4) &= e^{A_0(t_4-t_3)} X(t_3) \\
X(t_5) &= e^{A_{-1}(t_5-t_4)} X(t_4) + \int_{t_4}^{t_5} e^{A_{-1}(t_5-\tau)} G_{-1} B\, d\tau \\
X(t_6) &= e^{A_{-2}(t_6-t_5)} X(t_5) + \int_{t_5}^{t_6} e^{A_{-2}(t_6-\tau)} G_{-2} B\, d\tau \\
X(t_7) &= e^{A_{-1}(t_7-t_6)} X(t_6) + \int_{t_6}^{t_7} e^{A_{-1}(t_7-\tau)} G_{-1} B\, d\tau \\
X(t_8) &= e^{A_0(t_8-t_7)} X(t_7)
\end{aligned}
$$

The unknown times $t_1, t_2, \ldots, t_8$ are given as solutions to the eight transendental equations

$$
\begin{aligned}
C^T X(t_1) &= \sigma_2 & C^T X(t_5) &= \sigma_{-2} \\
C^T X(t_2) &= \sigma_2 & C^T X(t_6) &= \sigma_{-2} \\
C^T X(t_3) &= \sigma_1 & C^T X(t_7) &= \sigma_{-1} \\
C^T X(t_4) &= \sigma_{-1} & C^T X(t_8) &= \sigma_1
\end{aligned}
\qquad \text{III-6}
$$

while the initial condition for the periodic solution is obtained from a solution of the algebraic equation

$$X(t_8) = X(0) \qquad \text{III-7}$$

Even for simple systems the solution of the above equations is not easy. As the dimension of the system increases and as the number of segments increased, the computation grows exponentially. For higher order systems it is generally much easier to just continue mapping through the sequence of hyperplanes until the trajectory approaches an intersection of itself. If the resulting limit cycle is stable such successive mappings are easier to apply if a fast integration routine is available.

Two difficulties could theoretically arise in the application of this procedure. First the solution might enter and stay on a given hyperplane. If the piecewise linearization is chosen such that A_i and c^T are completely observable that is $c^T, c^T A_i, \ldots c^T A_i^{n-1}$ form a linearly independent set of vectors, then no solution can remain on the H_i hyperplane.

The second problem arises when one tries to solve the set of equations for $X(0)$ and the matrix of coefficients becomes singular. This may occur when a family of periodic solutions exist and also when no such periodic solution exists.

Application

In the demonstration of the piecewise linearization technique, there were two computational approaches which may be taken. The first approach was to solve the set of transendental equations obtained by Kovatch's (129, 130) technique and the second approach utilized the ASP digital program (139), for successive mappings until the periodic solution was obtained.

Since some knowledge was known about the limit cycle, the equations approximating the nonlinearity were selected to yield compatible results with the other techniques that are discussed.

These equations are:

$$\begin{aligned} F(\sigma) &= K_1\sigma - G_1 &, \quad & \sigma < -.3 \\ F(\sigma) &= K_0\sigma &, \quad & -.3 \le \sigma \le .3 \\ F(\sigma) &= K_1\sigma + G_1 &, \quad & \sigma > .3 \end{aligned} \qquad \text{III-8}$$

where $K_0 = 0.001$, $K_1 = 0.001066$ and $G_1 = 0.00002$

The system I-5, then has the piecewise linear representation of:

$$\dot{x} = A_0 x \qquad -.3 \le c^T x \le .3 \qquad \text{III-9}$$

$$\dot{x} = A_1 x - b_1 \qquad -.3 < c^T x \qquad \text{III-10}$$

$$\dot{x} = A_1 x + b_1 \qquad c^T x > .3 \qquad \text{III-11}$$

where $A_0 = A + K_0 b c^T$, $A_1 = A + K_1 b c^T$, $b_1 = b G_1$

The numerical values of A_0, A_1, b_1, are shown in figure III-a. The above differential equations then determine the behavior of the system in

the specific region of the phase space which is separated by the hyperplanes, $\sigma_1 = \pm .3$. Since the form of the solutions to equations III-9 to III-11 are known and the condition $X(0) = X(t_f)$ must be satisfied, as described previously. This results in the equation:

$$X(0) = \left[I - e^{A_0(t_4-t_3)} e^{A_1(t_3-t_2)} e^{A_0(t_2-t_1)} e^{A_1(t_1)}\right]^{-1} \left[e^{A_0(t_4-t_3)} e^{A_1(t_3-t_2)} e^{A_0(t_2-t_1)} e^{A_1 t_1} A_1^{-1}(e^{-A_1 t_1} - I) - e^{A_0(t_4-t_3)} e^{A_1(t_3)} A_1^{-1}(e^{-A_1 t_3} - e^{-A_1 t_2})\right] b \qquad \text{III-12}$$

From the intersection of the trajectory with the hyperplanes, the resulting equations are obtained:

$$\sigma_1 = .3 = c^T e^{A_1 t_1} X(0) + c^T e^{A_1 t} A_1^{-1}(e^{-A_1 t_1} - I) b, \qquad \text{III-13}$$

$$-\sigma_1 = -.3 = c^T e^{A_0(t_2-t_1)} e^{A_1 t_1} X(0) + c^T e^{A_0(t_2-t_1)} e^{A_1 t_1} A_1^{-1}(e^{-A_1 t} - I) b, \qquad \text{III-14}$$

$$-\sigma_1 = -.3 = c^T e^{A_1(t_3-t_2)} e^{A_0(t_2-t_1)} e^{A_1 t_1} X(0) + c^T\left[e^{A_1(t_3-t_2)} e^{A_0(t_2-t_1)} e^{A_1 t_1} A^{-1}(e^{-A_1 t_1} - I) - e^{A_1 t_3} A_1^{-1}(e^{-A_1 t_3} - e^{-A_1 t_2})\right] b, \qquad \text{III-15}$$

$$\sigma_1 = .3 = c^T e^{A_0(t_4-t_3)} e^{A_1(t_3-t_2)} e^{A_0(t_2-t_1)} e^{A_1 t_1} X(0) + c^T\left[e^{A_0(t_4-t_3} e^{A_1(t_3-t_2)} e^{A_0(t_2-t_1)} e^{A_1 t_1} A_1^{-1}(e^{-A_1 t_1} - I) - e^{A_0(t_4-t_3)} e^{A_1 t_3} A_1^{-1}(e^{-A_1 t_3} - e^{-A_1 t_2})\right] b, \qquad \text{III-16}$$

In order to solve the equations III-12 to III-16, the closed form representation of the transition matrix must be obtained. The derivation of this representation along with the 1620 computer program which was written to perform the calculations are shown in Appendix F, and no attempt will be made presently to show that the transition matrix is:

$$e^{At} = e^{\alpha_1 t}\left[P_1 \cos\beta_1 t + Q_1 \sin\beta_1 t\right] + e^{\alpha_2 t}\left[P_2 \cos\beta_2 t + Q_2 \sin\beta_2 t\right]$$

where the eigenvalues of A are $\alpha_1 \pm j\beta_1$, and $\alpha_2 \pm j\beta_2$ and Pi, Qi are matrices whose dimension is the same as A. The values of Pi, Qi are shown in figure III-b and c. Though the transition matrices where computed, one can see the computational difficulties that are encountered. This approach was abandoned at this point and the ASP program was used to solve this problem.

The logic behind the ASP program is basically very simple, since the solution to the linear differential equations is known to have the general form

$$X(t) = e^{At} X(t_0) + \int_{t_0}^{t} e^{A(t-\tau)} B \, d\tau$$

and the ASP program contains this computation as one of its subroutines, $X(t)$ may be computed. This subroutine is called EAT. Then by computing $\sigma = C^T X$, the switching of A_0 (III-9) to A_1 (III-10) etc., is determined by a simple IF statement. The state vector X(t) is printed out X^T at different values of time. Thus a time

solution is obtained for the complete state vector.

Included in the following figures (III-D1 to III-D7) is a listing of the program, the input data, and a sample of the output. The constants from Z1 to E1 and Q_1, Q_2 are computational aids. Tabulated below is the ASP representation of the input matrices and vectors.

ASP	Mathematical Representation	Definition
Si (S_1, S_2)	σ_i (σ_1, σ_2)	Switching points
Ai	Ki	The slope of the linear approximation
Bi	Gi	The constants associated with the linear approximation
F	A	Original system matrix (I-5)
G	b	Vector of (I-5)
T		Iteration time
ND		Final time
X	X(to)	Initial State Vector

The constants used as computational aids may be explained by an example. Consider E1, this constant is used to construct an equivalent "go to" statement which exists in standard Fortran language. In ASP, the statement I F A, B , HEAD 2 means if A is greater than or equal to B, go to HEAD 2. Simply by setting A equal B reduces the IF statement to a simple "go to" statement. If one is familiar with

the ASP vocabulary, it can be seen from the listing that for any $X(t_0)$, $\sigma_0 = C^T X(0)$ is computed and then compared to the switching points σ_1 or σ_2, which are .3 and .315 respectively. Upon determining the region, the matrix $A_i = A + k_i b c^T$ and the vector B = bGi are constructed. Observe that the nonlinearity was approximated by the addition equation

$$\dot{x} = A_2 x + b_2 \qquad \sigma > .315$$
$$\dot{x} = A_2 x - b_2 \qquad \sigma < -.315$$

where $A_2 = A + k_2 b c^T$ and $b_2 = b G_2$. This was added so that any initial state may be selected. The rest of the program is straight forward and self-explanatory. The results are shown in figures III-E1 and III-E2.

$$A_o = \begin{bmatrix} -.31120000E-02 & .10000000E+01 & .00000000E-99 & .00000000E-99 \\ -.23250000E+01 & .00000000E-99 & -.67450000E+01 & -.94580000E+01 \\ -.53300000E-05 & .00000000E-99 & .00000000E-99 & .10000000E+01 \\ .11500000E-02 & .00000000E-99 & -.91700000E+00 & -.12850000E+01 \end{bmatrix}$$

$$A_1 = \begin{bmatrix} -.33200000E-02 & .10000000E+01 & .00000000E-99 & .00000000E-99 \\ -.23250000E+01 & .00000000E-99 & -.67450000E+01 & -.94580000E+01 \\ -.56700000E-05 & .00000000E-99 & .00000000E-99 & .10000000E+01 \\ .11500000E-02 & .00000000E-99 & -.91700000E+00 & -.12850000E+01 \end{bmatrix}$$

$$B_1 = \begin{bmatrix} -.62240000E-04 \\ .10080000E-05 \\ -.10660000E-06 \\ .13698000E-06 \end{bmatrix}$$

FIG. III-a

$\alpha_1 = -.64467000E+00$ $\beta_1 = .70941000E+00$

$\alpha_2 = .61587000E-03$ $\beta_2 = .15260000E+01$

$$P_1 = \begin{bmatrix} .17525405E-02 & -.14648843E-02 & -.16203934E+01 & -.37583872E+01 \\ -.92498603E-03 & .17480434E-02 & .34512789E+01 & .32112924E+01 \\ .27540069E-03 & .25588867E-03 & .99956335E+00 & .21351350E-03 \\ -.59023431E-03 & .27540840E-03 & -.19130877E-02 & .99688888E+00 \end{bmatrix}$$

$$Q_1 = \begin{bmatrix} .26121942E-03 & .11575101E-02 & .33994967E+01 & .11276578E+01 \\ -.13764322E-02 & .26484381E-03 & -.10312909E+01 & .19430176E+01 \\ -.58171047E-03 & .62074883E-03 & .90563825E+00 & .14054047E+01 \\ .17961050E-03 & -.58171670E-03 & -.12929611E+01 & -.90618377E+00 \end{bmatrix}$$

$$P_2 = \begin{bmatrix} .99824748E+00 & .14648409E-02 & .16203935E+01 & .37583873E+01 \\ .92505960E-03 & .99825203E+00 & -.34512783E+01 & -.32112919E+01 \\ -.27540061E-03 & -.25588865E-03 & .43666313E-03 & -.21354569E-03 \\ .59023425E-03 & -.27540844E-03 & .19131342E-02 & .31112144E-02 \end{bmatrix}$$

$$Q_2 = \begin{bmatrix} -.18232157E-02 & .65415049E+00 & -.22655660E+01 & -.21135031E+01 \\ -.15233425E+01 & .21251978E-03 & -.24812128E+01 & -.57432466E+01 \\ .39037573E-03 & -.18036963E-03 & .12578406E-02 & .20509216E-02 \\ .42051950E-03 & .38688909E-03 & -.65199967E-03 & .33959470E-03 \end{bmatrix}$$

$e^{A_0 \tau}$

FIG. III-b

$\alpha_1 = -.64467000E+00$ $\beta_1 = .70941000E+00$

$\alpha_2 = -.51235000E-03$ $\beta_2 = .15260000E+01$

$$P_1 = \begin{bmatrix} .70204285E-03 & -.39332664E-03 & -.16260515E+01 & -.37661168E+01 \\ -.34257803E-02 & .70074742E-03 & .34507835E+01 & .32046251E+01 \\ .27630235E-03 & .25603637E-03 & .99956469E+00 & .21677152E-03 \\ -.59028903E-03 & .27630459E-03 & -.19164644E-02 & .99688593E+00 \end{bmatrix}$$

$$Q_1 = \begin{bmatrix} -.23097454E-02 & .15472615E-02 & .33941612E+01 & .11166678E+01 \\ -.22939955E-02 & -.23046051E-02 & -.10231524E+01 & .19483163E+01 \\ -.58096843E-03 & .62141873E-03 & .90563665E+00 & .14054050E+01 \\ .17849407E-03 & -.58097720E-03 & -.12929670E+01 & -.90619241E+00 \end{bmatrix}$$

$$P_2 = \begin{bmatrix} .99929804E+00 & .39330981E-03 & .16260514E+01 & .37661166E+01 \\ .34258512E-02 & .99929934E+00 & -.34507832E+01 & -.32046248E+01 \\ -.27630235E-03 & -.25603636E-03 & .43539947E-03 & -.21679080E-03 \\ .59028899E-03 & -.27630460E-03 & .19165233E-02 & .31141961E-02 \end{bmatrix}$$

$$Q_2 = \begin{bmatrix} -.46970972E-03 & .65442275E+00 & -.22642761E+01 & -.21088784E+01 \\ -.15239708E+01 & .17029582E-02 & -.24877572E+01 & -.57508988E+01 \\ .39043058E-03 & -.18080791E-03 & .12594603E-02 & .20520275E-02 \\ .42145182E-03 & .38671999E-03 & -.64929455E-03 & .34463086E-03 \end{bmatrix}$$

FIG. III-c

$e^{A_1 \tau}$

```
      JULY 15, 1965                                                      1
      BEGIN                                                              2
      LOAD  Z1,ON,TW,TH,LM,OE,E1,S1,S2,A1,A2,A3,B1,B2,B3, K, X, F,Q1,Q2 3
      LOAD   T,ND  G
      EQUAT  T DT
      EQUAT Z1 RT
      MULT   K, X,   SG                                                  4
      MULT  SG SG    M2                                                  5
      DECOM M2    AS 11 12 13 14
      TRANP  X    XT                                                     5
      RINT  RT    XT  X
HEAD 9IF    AS S1 HEAD 1                                                 6
      EQUAT A1 AL B1 BT ON CD                                            6
      IF    E1 E1 HEAD 2                                                 6
HEAD 1IF    AS S2 HEAD 3                                                 6
      EQUAT A2 AL B2 BT TW CD                                            6
      IF    E1 E1 HEAD 2                                                 6
HEAD 3EQUAT A3 AL B3 BT TH CD                                            6
HEAD 2MULT  AL  K     1                                                  7
      MULT   G  1     2                                                  7
      ADD    F  2    FS                                                  7
      MULT   G BT     B                                                  7
HEAD 4MULT  LM, T,    T
      EAT   FS, T,PH,IN                                                  8
      MULT  IN  B,   G1                                                  8
      MULT  PH, X,   X1                                                  9
      ADD   X1 G1    X1                                                  9
      MULT   K X1    SG                                                  10
      MULT  SG SG,   M2                                                  11
      DECOM M2    AS 11 12 13 14                                         11
      IF    AS S1 HEAD 5                                                 12
      IF    ON CD HEAD11                                                 12
      IF    CD TH HEAD 6                                                 12
      SUBT  S1,AS     3                    CD = 2                        12
      MULT  Q1, 3     4                                                  12
      IF     4,E1,HEAD 6HEAD12                                           12
HEAD 6MULT  OE, T,    T                                                  13
      IF    E1 E1 HEAD 4                                                 13
HEAD 5IF    AS S2 HEAD 7                                                 14
      IF    ON CD HEAD 8                                                 14
      IF    CD TH HEAD10HEAD11                                           14
HEAD 8SUBT  AS S1     3                                                  14
      MULT  Q1  3     4                                                  14
      IF     4 E1 HEAD 6HEAD12                                           14
HEAD10SUBT  S2 AS     3                                                  14
      MULT  Q2  3     4                                                  14
      IF     4 E1 HEAD 6HEAD12                                           14
HEAD11ADD   RT  T    RT                                                  15
      EQUAT X1, X,DT, T
      TRANP  X    XT                                                     15
      RINT  RT    XT, X                                                  15
      IF    ND,RT,HEAD 4HEAD13
HEAD12ADD   RT  T    RT                                                  16
      EQUAT X1, X,DT, T
      TRANP  X    XT                                                     16
      RINT  RT    XT  X                                                  16
      IF    ND,RT,HEAD 9HEAD13
HEAD 7IF    ON,CD,HEAD 6                                                 17
      IF    CD,TH HEAD11                                                 17
      SUBT  AS S2,    3                                                  17
      MULT  Q2  3     4                                                  17
      IF     4 E1 HEAD 6HEAD12                                           17
```

FIG. III D1

HEAD 1 3END

FIG. III D·2

THE FOLLOWING DATA HAS BEEN STORED IN THE INDICATED MATRIX STORAGE.

MATRIX Z1

1 1

0.

MATRIX W4

1 1

0.05555999E 01

MATRIX I4

1 1

0.20000000E 01

MATRIX I5

1 1

0.10000000E 01

MATRIX I8

1 1

0.09999999E 01

MATRIX U6

1 1

0.50000000E 00

MATRIX F1

1 1

0.99999998E-02

Fig. III - D3

```
MATRIX  S1
                1    1
    0.30000000E-00

MATRIX  S2
                1    1
    0.31000000E-00

MATRIX  A1
                1    1
    0.05999999E-02

MATRIX  A2
                1    1
    0.10066007E-02

MATRIX  A3
                1    1
    0.15000000E-01

MATRIX  B1
                1    1
    0.

MATRIX  B2
                1    1
   -0.20000000E-04
```

FIG. III-D4

MATRIX G3

1 1

-0.45979939E-02

MATRIX K

1 4

0.09999999E 01 -0. -0. -0.

MATRIX X

4 1

0.42461363E-03 0.50433847E-04 -0.92920849E-04 0.18967395E-03

MATRIX F

4 4

0.	0.09999999E 01	-0.	-0.	-0.23249999E 01	0.
-0.07449599E 01	-0.94579998E 01	-0.	-0.	0.	0.09999999E 01
0.11499999E-02	-0.	-0.91700000E 00	-0.12849999E 01		

MATRIX G1

1 1

0.33333332E 01

MATRIX G2

1 1

0.31428500E 01

FIG. III - D5

THE FOLLOWING DATA HAS BEEN STORED IN THE INDICATED MATRIX STORAGE.

MATRIX 1

1 1

0.49999999E-01

MATRIX AD

1 1

0.25000000E 02

MATRIX G

4 1

-0.31119999E 01 0.50399999E-01 -0.53299999E-02 0.68499999E-02

FIG. III · DC

```
MATRIX    X ( 0.                1)

NUMBER OF ROWS  1     NUMBER OF COLUMNS  4

   0.32061635E-00    0.50838474E-04   -0.92920869E-04    0.18967395E-03

MATRIX    X ( 0.49999999E-01)

NUMBER OF ROWS  1     NUMBER OF COLUMNS  4

   0.31962436E-00   -0.37236504E-01   -0.83286603E-04    0.19975125E-03

MATRIX    X ( 0.99999999E-001)

NUMBER OF ROWS  1     NUMBER OF COLUMNS  4

   0.31677551E-00   -0.74314539E-01   -0.73169792E-04    0.20864506E-03
```

FIG III-27

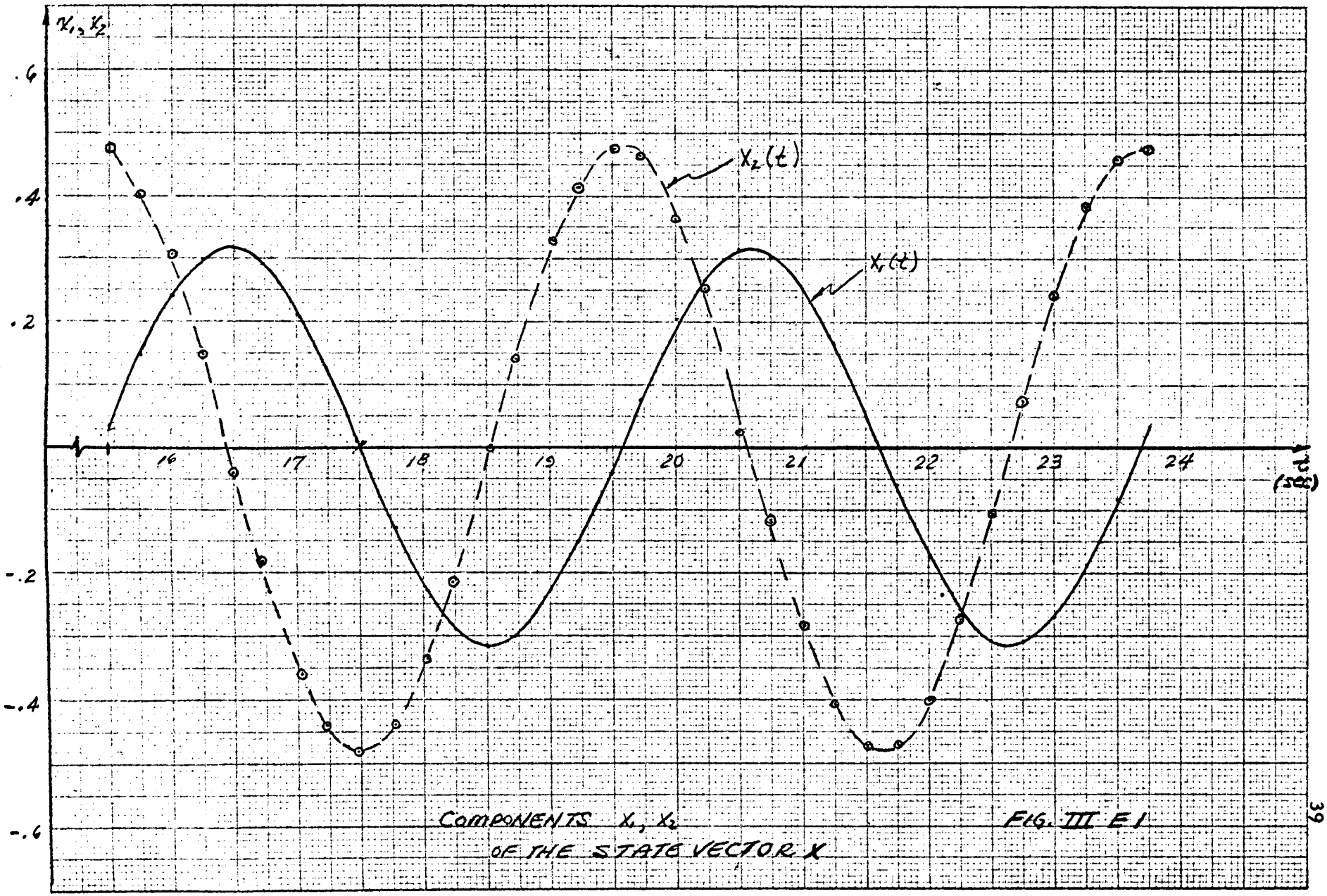

COMPONENTS x_1, x_2 OF THE STATE VECTOR x

FIG. III E1

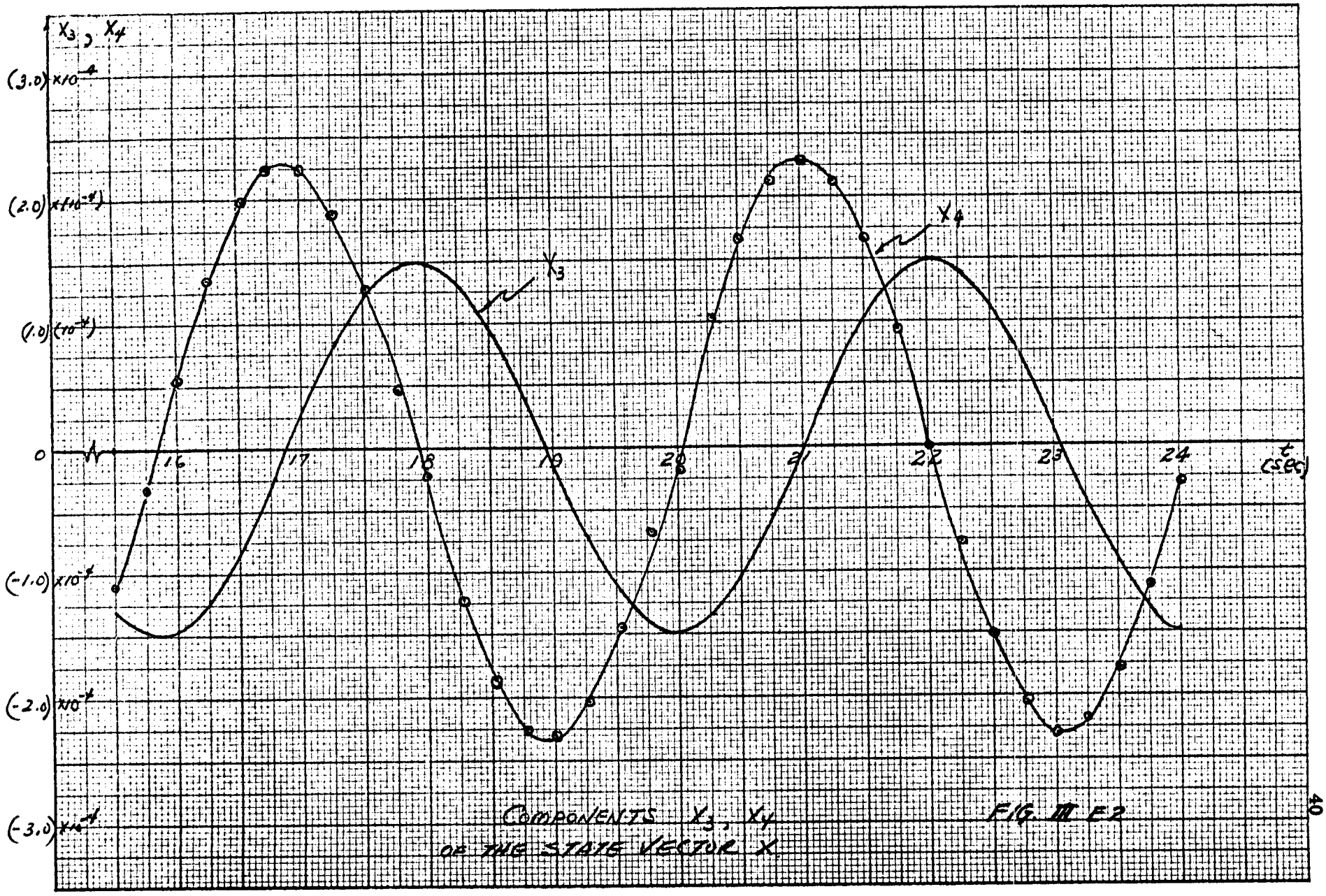

COMPONENTS X_3, X_4 OF THE STATE VECTOR X

FIG. III E2

C. Limitations

The method of peicewise linearization remains the most general procedure for obtaining periodic solutions of systems with large nonlinearities. If the system under investigation possesses limit sets other than periodic solutions, the procedure fails. Its two main limitations appear to be the difficulty of solution of the associated transendental equations and the need for a priori knowledge of the order in crossing the hyperplanes. This last limitation in essence requires one to know before hand a good estimate of the amplitude of the oscillation.

The second procedure of continually mapping an initial vector until the solution intersects or approaches itself is very practical for systems with stable limit cycles providing one has access to a good computer program. A computer program such as ASP has been demonstrated to perform quite well. Because of the speed of computation one may start with a crude peicewise linearization and then refine the approximation as the approximate solution is developed. The effect of different peicewise linearizations can be easily evaluated thus obtaining a sensitivity analysis of the resulting characteristics of the periodic solution to the nature of the nonlinearity.

IV. FREQUENCY RESPONSE METHODS

A. Theory

The use of frequency response method in the guise of the describing function has been the most widely used method for the analysis and synthesis of nonlinear systems. The method owes its popularity to its simplicity of application and its freedom from severe computational difficulties. A second frequency response method known as the Popov criteria has been developed within the past few years but has not had as yet the wide spread publicity of the describing function. In both methods much is common and one forms a logical applied extension of the other. Both are applicable to systems of the form

$$\begin{aligned} \dot{X} &= AX + BY \\ Y &= F(\sigma) \\ \sigma &= C^T X \end{aligned} \qquad \text{IV-1}$$

The describing function method consists of replacing the nonlinearity by an amplitude dependent characteristic and using this characteristic in a conventional Nyquist plot.

If σ is assumed to be a pure sine wave

$$\sigma = A \sin \omega t \qquad \text{IV-2}$$

Then Y is given by the fourier series

$$Y = \sum_{n=1}^{\infty} a_n \sin(n\omega t) + b_n \cos(n\omega t) + \frac{b_0}{2} \qquad \text{IV-3}$$

where the coefficients a_n and b_n are defined as

$$a_n = \frac{1}{\pi} \quad F(A\sin\omega t)\sin(n\omega t)\,dt$$

$$b_n = \frac{1}{\pi} \quad F(A\sin\omega t)\cos(n\omega t)\,dt \qquad \text{IV-4}$$

The describing function for this system is defined as

$$N(A,\omega) = \frac{a_1(A,\omega) + i\,b_1(A,\omega)}{A} \qquad \text{IV-5}$$

The linear transfer function σ/Y is given by

$$\sigma(s)/Y(s) = P(s)/Q(s) = C^T(Is - A)^{-1}B \qquad \text{IV-6}$$

If IV-6 is solved for $Y(s)$ and if we allow $\sigma(t)$ to be given by IV-2 we obtain

$$Q(s)/P(s)\left[\frac{\omega A}{s^2+\omega^2}\right] = Y(s) = \frac{a_0}{2s} + \frac{a_1\omega}{s^2+\omega^2} + \frac{b_1 s}{s^2+\omega^2} + \frac{2a_2\omega}{s^2+\omega^2} + \frac{b_2 s}{s^2+\omega^2} + \cdots \qquad \text{IV-7}$$

If we multiply IV-7 through by $s^2+\omega^2$ and allow $s \to j\omega$ we obtain

$$Q(j\omega)/P(j\omega)\,(\omega A) = a_1\omega + b_1\omega \qquad \text{IV-8}$$

Solving for the open loop transfer function we obtain as a condition for a periodic solution the relation

$$P(j\omega)/Q(j\omega) = \frac{A}{a_1 + j b_1} = 1/N(A,\omega) \qquad \text{IV-9}$$

Solutions to IV-9 are obtained by plotting the open loop transfer function $P(i\omega)/Q(i\omega)$ and crossplotting $1/N(A,\omega)$. Periodic solutions are indicated for those values of the frequency ω where intersections occur. The amplitude of the periodic solution is found from IV-9.

The preceeding discussion is based upon the assumption that the nonlinearity is an odd function that is $F(\sigma) = -F(\sigma)$. If $F(\sigma)$ is even, then the above procedure would indicate that no fundamental is present in the fourier expansion of the output. That in this case one assumes.

$$\sigma = A_0 + A_1 \sin \omega t$$

Two relations are now obtained for the existence of a limit cycle. One relates the bias level of the oscillation and the second gives the frequency and amplitude of oscillations.

For arbitrary nonlinearities which are neither even nor odd, a biased input should be considered for limit cycle analysis.

By means of the describing function, the nonlinear system is replaced by an equivalent linear system, from which the deviations may be expressed in terms of a small parameter. Thus IV-1 is replaced by

$$\begin{aligned} \dot{X} &= AX + BY \\ Y &= F(\sigma) = \gamma\sigma + \mu\phi(\sigma) \\ \sigma &= C^T X \end{aligned} \qquad \text{IV-10}$$

For the linear approximation, that is with $\mu = 0$, we have assumed a periodic solution of the form $\sigma = A \sin \omega t = A \sin(\omega_0 + \bar{\omega})t$

The describing function has the form

$$N(A,\omega) = \gamma + \mu N'(A,\omega) \qquad \text{IV-11}$$

where $N'(A,\omega)$ is the describing function for $\phi(\sigma)$. For a periodic solution we required

$$Q(i\omega)/P(i\omega) = N(A,\omega) = \gamma + \mu N'(A,\omega) \qquad \text{IV-12}$$

If this equation is expanded about the point ω_0 we obtain

$$Q(i\omega_0) + i\frac{\partial Q(i\omega)}{\partial\omega}\bigg|_{\omega=\omega_0}\bar{\omega} = \left\{P(i\omega_0) + i\frac{\partial P}{\partial\omega}\bigg|_{\omega=\omega_0}\bar{\omega}\right\} N(A,\omega) + O(\bar{\omega}^2)$$

rearranging terms we obtain

$$N(A,\omega) = \frac{Q(i\omega_0) + i\,Q'(i\omega_0)\,\bar{\omega}}{P(i\omega_0) + i\,P'(i\omega_0)\,\bar{\omega}} \cong \frac{Q(i\omega_0)}{P(i\omega_0)} + i\frac{\partial}{\partial\omega}\left(\frac{Q}{P}\right)_{\omega=\omega_0}\bar{\omega} \qquad \text{IV-13}$$

In the graphical solution for periodic solutions, the last term in IV-13 is ignored. This may account for the discrepancy between the predicted frequency of oscillations and observed frequencies. This might also account for the occasional failure of the method to predict a limit cycle when one actually exists.

The describing function method is generally applied heuristically to problems without any regard to its validity or mathematical legitimacy. Many rules of thumb have been developed by which one either accepts or rejects its conclusions. The two primary questions relating its validity are: 1) What additional restrictions are required to insure that the periodic solutions of the equivalent linear system

represents periodic solutions of the nonlinear system? 2) Is it possible for the nonlinear system to have periodic solutions which are not predicted by the describing function.

Bass (98) has given a complete mathematical answer to (1), but his results do not lend themselves to easy verification. His results may be stated in the following theorem

Theorem: Consider the system of the form

$$\omega^2 \frac{d^2x}{d\theta^2} + \omega A \frac{dx}{d\theta} + Bx = F\left(x, \omega \frac{dx}{d\theta}\right) \qquad \text{IV-14}$$

and its companion equivalent linear system

$$\omega^2 \frac{d^2x}{d\theta^2} + \omega A \frac{dx}{d\theta} + Bx = F\left(x_0, \omega \frac{dx_0}{d\theta}\right) \qquad \text{IV-15}$$

and the generating system given by

$$\omega^2 \frac{d^2x}{d\theta^2} + \omega A \frac{dx}{d\theta} + Bx = F\left[\left(\mu x + (1-\mu) x_0\right), \left(\omega\mu \frac{dx}{d\theta} + \omega(1-\mu)\frac{dx_0}{d\theta}\right)\right] \qquad \text{IV-16}$$

where it is assumed that

$$F\left(-x, -\frac{dx}{d\theta}\right) = -F\left(x, \frac{dx}{d\theta}\right)$$

$$F(x, 0) \neq 0 \qquad F(0,0) = 0$$

then the periodic solutions of IV-15 are periodic solutions of IV-14 providing a) IV-15 is regular and b) IV-16 is resonance free. X_0 is given by

$$x_0(\theta) = \left\{\frac{2}{\pi} \int_0^{\pi} x(\sigma) \cos\sigma \, d\sigma\right\} \cos\theta + \left\{\frac{2}{\pi} \int_0^{\pi} x(\sigma) \sin\sigma \, d\sigma\right\} \sin\theta \qquad \text{IV-17}$$

The periodic solution of IV-15 is obtained from the algebraic equations

$$(\omega^2 I - B)\bar{a}_1 - \omega^2 A \bar{b}_1 + \frac{2}{\pi}\int_0^{\pi} F\left(x_0, \omega\frac{dx_0}{d\theta}\right)\cos\theta\, d\theta = 0 \qquad \text{IV-18}$$

$$\omega A \bar{a}_1 + (\omega^2 I - B)\bar{b}_1 + \frac{2}{\pi}\int_0^{\pi} F\left(x_0, \omega\frac{dx_0}{d\theta}\right)\sin\theta\, d\theta = 0$$

Observe that IV-18 is the same as IV-9. System IV-15 is said to be regular if the Jacobian matrix of IV-18 evaluated at ω_1, $\bar{a}_1$, and $\bar{b}_1$, is nonzero. This condition is easily verified, but the requirement that IV-16 be resonance free poses the difficulty. In essence IV-16 is resonance free if all solutions of IV-16 are bounded and if there are no periodic solutions with $\omega = 0$ or $\omega \to \infty$.

The Popov criteria is used to determine the global asymptotic stability of systems of the form IV-1 under the additional hypothesis

a) $0 \leq \sigma F(\sigma) \leq k\sigma^2$

b) A is stable

Under these assumptions, Popov's theorem states

Theorem: If there exists a real number β such that

$$\text{Real}\left\{\frac{1}{k} + (1 + i\omega\beta)c^T(i\omega I - A)^{-1}B\right\} > 0$$

for all $\omega > 0$ then IV-1 is globally asymptotically stable.

The application of the Popov theorem is made graphically analogous to the application of the Nyquist criteria. If the nonlinearity $F(\sigma)$ was replaced by a linear characteristic

$$F(\sigma) = \lambda\sigma \qquad 0 < \lambda < k$$

Then a sufficient condition for asymptotic stability would be for the closed loop characteristic equation

$$1 + \lambda c^T (Is - A)^{-1} B \qquad \text{IV-19}$$

have no roots in the right half plane. This is equivalent to stating that there exists no frequency ω such that

$$c^T (i\omega I - A)^{-1} B = -1/\lambda \qquad \text{IV-20}$$

Solutions of this are obtained by plotting the locus of $c^T (i\omega I - A)^{-1} B$ in the complex plane. The graphical interpretation of the requirement that $c^T (i\omega I - A)^{-1} B > -1/\lambda$ is that the locus of this plot does not cross the negative real axis to the left of the value $-1/k$.

To obtain conditions for arbitrary nonlinearities such that system IV-1 is asymptotically stable has been the aim of mathematicians for the past decade. Such conditions have been found by the use of the second method of Liapunov. Popov's theorem is the first result given rigorously in terms of frequency plots.

If the open loop transfer function

$$G(i\omega) = \alpha(\omega) + i\beta_1(\omega) = c^T (i\omega I - A)^{-1} B$$

is modified to

$$G^*(i\omega) = \alpha(\omega) + i\omega\beta_1(\omega)$$

by a change of scale on the imaginary axis, then the Popov inequality

$$1/k + \mathrm{Re}\left\{ (1 + i\omega\beta)(c^T (i\omega I - A)^{-1} B) \right\} > 0$$

may be interpreted graphically as the requirement of the modified function $G^*(i\omega)$ lying to the right of the line

$$1/K + \alpha - \beta\omega\beta_1$$

This line has the X intercept at $-1/K$ and slope $1/\beta$. The Popov criteria contains the Nyquist criteria as a special case.

B. Application

In the application of the frequency response techniques, the system under consideration will have the canonical form of equation I-5, the nonlinearity is that of I-6 and the block diagram representation is of figure I-b. Since there are two different techniques involved, the first one considered will be the more familiar describing function method. Equations I-5, I-6 will then be modified to satisfy the assumptions of Popov, and the application will follow.

Describing Function:

By replacing the nonlinearity, $F(\sigma)$, with a describing function, the standard Nyquist criteria was applied. Initially, a Rough Hurwitz test was performed on the open loop characteristic equation to ascertain the number of open loop poles on the right half plane. In this particular example there were two.

The fourier series representation for $F(\sigma)$ is in general,

$$F(\sigma) = \sum_{n=1}^{\infty} Y_n \sin(n\theta) + X_n \cos(n\theta)$$

However, since the nonlinearity, equation I-6, is an odd function, $X_n = 0$ and the describing function for $F(\sigma)$ for all values of $|\sigma_p| > .3$ is,

$$N(\sigma_p, \omega) = \frac{2}{\pi \sigma_p} \int_0^{\pi} F(\sigma) \sin\theta \, d\theta$$

where $\sigma = \sigma_p \sin\theta$. By direct substitution, and letting $\theta_1 = \sin^{-1}\left(\frac{.3}{\sigma_p}\right)$

$$N = \frac{2}{\pi\sigma_p}\left\{ \int_0^{\theta_1}(.001)\sigma_p \sin^2\theta\, d\theta + \int_{\theta_1}^{\pi-\theta_1} 2\left(\sigma_p^3\frac{\sin^3\theta}{3} - \frac{3}{2}\sigma_p^2\sin^2\theta\right)\sin\theta\, d\theta \right.$$

$$+ \int_{\theta_1}^{\pi-\theta_1}(.001)\sigma_p\sin\theta + .009)\sin\theta\, d\theta$$

$$\left. + \int_{\pi-\theta_1}^{\pi}(.001)\sigma_p\sin^2\theta\, d\theta \right\}$$

Performing the integration and evaluation yields,

$$N = \frac{2}{\pi\sigma_p}\left\{ \frac{\sigma_p^3}{6}\left[\frac{3\pi}{2} - 3\theta_1 + 2\sin 2\theta_1 - \frac{1}{4}\sin 4\theta_1\right] \right.$$

$$+ .3\sigma_p^2\left[\frac{2}{3}\cos^3\theta_1 - 2\cos\theta_1\right]$$

$$\left. + .0005\sigma_p\pi + .01806\cos\theta_1 \right\}$$

Since there were no energy storage components in the nonlinearity, $N(\sigma_p)$ is real. As shown in figure IV-a, the intersection of the amplitude loci with the frequency loci occurred at $\sigma_p = .329$ and a frequency of 1.529 rads/sec, which identifies the limit cycle.

For the purpose of demonstration, the original equations of the system, I-3, I-4 were modified so the nonlinearity $f(\zeta)$ was now a function of both the slosh amplitude and rate. Specifically

$$f(\zeta,\dot{\zeta}) = f_a(\zeta) + f_b(\dot{\zeta})$$

where $f_a(\zeta)$ was the original nonlinearity and

$$f_b(\dot{\zeta}) = \dot{\zeta}^2, \text{ for all } \dot{\zeta}$$

By defining a new state vector,

$$x^T = [x_1 \quad x_2 \quad x_3 \quad x_4] = [\zeta \quad \dot{\zeta} \quad \phi \quad \dot{\phi}]$$

and $\quad c_1^T x = \sigma_1 \quad , \quad c_2^T x = \sigma_2$

where

$$c_1^T = [1 \quad 0 \quad 0 \quad 0] \quad , \quad c_2^T = [0 \quad 1 \quad 0 \quad 0]$$

The system has the vector-matrix representation of

$$\dot{x} = Ax + b\,F(\sigma_1, \sigma_2)$$
$$\sigma_1 = c_1^T x$$
$$\sigma_2 = c_2^T x$$

where A is the same as I-5,

$$b^T = [0 \quad -3.112 \quad 0 \quad -0.00533]$$

and $\quad F(\sigma_1, \sigma_2) = .001\,\sigma_2 + \sigma_2^3 \qquad$ when $\qquad 0 \le |\sigma_1| \le .3$

$$F(\sigma_1, \sigma_2) = \sigma_2\left(2\left[\sigma_1^2 - |\sigma_1|(.3)\right] + .009 + \sigma_2^2\right) \quad \text{when} \quad |\sigma_1| > .3$$

The block diagram of the system has the representation, of

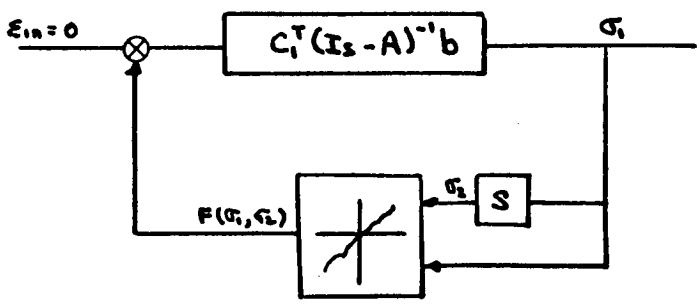

The describing function for $F(\sigma_1, \sigma_2)$ was computed to be

$$N(\sigma_p, \omega) = \frac{A_1}{\sigma_p} + j\frac{B_1}{\sigma_p} = \alpha + j\beta$$

for $\quad 0 \le |\sigma_p| \le .3$

$$\alpha = 0$$
$$\beta = \omega\left(.001 + \omega^2 \sigma_p^2\, 3/4\right)$$

for $|\sigma_p| > .3$

$$\alpha = \frac{\omega^3 \sigma_p^3}{\pi} \cos^4 \theta_1$$

$$\beta = \omega \frac{2}{\pi} \Big\{ .001\,\theta_1 + \omega^2 \sigma_p^2 \left(\tfrac{3}{8}\pi - \tfrac{1}{2}\sin 2\theta_1 - \tfrac{1}{16}\sin 4\theta_1 \right)$$
$$+ 2\sigma_p^2 \left(\pi/8 - \theta_1/4 + \tfrac{1}{16}\sin 4\theta_1 \right)$$
$$+ .009 \left(\pi/2 - \theta_1 - \tfrac{1}{2}\sin 2\theta_1 \right)$$
$$- .4\,\sigma_p \cos^3 \theta_1 \Big\}$$

Figures IV-b, IV-c, IV-d, indicate again, that the system has a limit cycle. However, the amplitude is now .0142, and the frequency 1.525 rads/sec. This example does demonstrate that the describing function may be used on nonlinearities of more then one variable.

Popov's Criteria:

The system to which this technique is applied has the same canonical form as equation I-5, however, due to the restriction that the matrix A must be stable it was modified by replacing the nonlinearity $F(\sigma)$ by,

$$F(\sigma) = k\sigma + \phi(\sigma)$$

where k is a constant gain. The system is then

$$\dot{x} = \tilde{A}x + b\,\phi(\sigma)$$
$$\sigma = c^T x \qquad \text{IV-21}$$

where $\tilde{A} = A + kbc^T$ and k was selected large

enough to stabilize $\tilde{A}$.

$$\tilde{A} = \begin{bmatrix} -0.03112 & 1 & 0 & 0 \\ -2.3244 & 0 & -6.745 & -9.458 \\ -5.33(10^{-3}) & 0 & 0 & 1 \\ 1.218(10^{-3}) & 0 & -0.917 & -1.285 \end{bmatrix}$$

and numerically, the open loop transfer function is:

$$\frac{\sigma}{\phi(\sigma)} = \frac{3.112\,s^3 + 1.234\,s^2 + 2.8177\,s}{s^4 + 1.316\,s^3 + 3.281\,s^2 + 3.025\,s + 2.138}$$

Then for any nonlinearity $\phi(\sigma)$ which satisfies the condition

$0 \leq \sigma\,\phi(\sigma) \leq K_1\sigma^2$, the Popov's criteria may be used.

From the figures IV-e, IV-f, any nonlinearity which satisfies the condition imposed on $\phi(\sigma)$, where $K_1 = 0.1428$ the system is gobally asymptotically stable, since a "q" does exist for which

$$1/K_1 + \mathrm{Re}\left\{ (1 + i\omega q)(c^T(i\omega I - A)^{-1}b) \right\} > 0$$

for all $\omega > 0$.

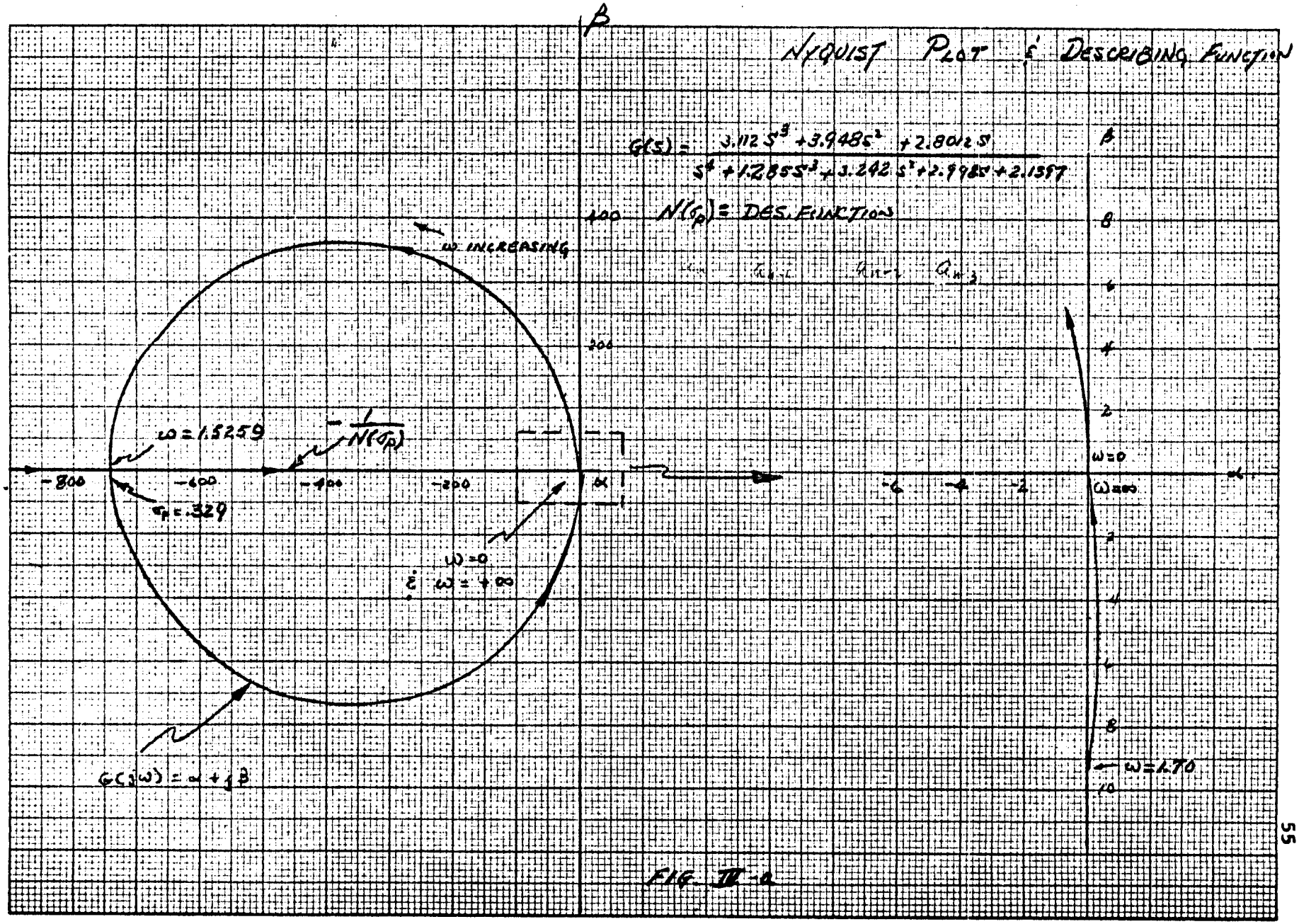
NYQUIST PLOT & DESCRIBING FUNCTION
$G(s) = \frac{3.112 s^3 + 3.948 s^2 + 2.802 s}{s^4 + 1.285 s^3 + 3.242 s^2 + 2.998 s + 2.157}$
$N(\sigma_p)$ = DES. FUNCTION
ω INCREASING
$\omega = 1.5259$
$-\frac{1}{N(\sigma_p)}$
$\sigma_p = .329$
$\omega = 0$
$\omega = +\infty$
$G(j\omega) = \alpha + j\beta$
$\omega = 0$
$\omega = \infty$
$\omega = 1.70$
β
α
-800
-600
-400
-200
-6
-4
-2
100
200
8
6
4
2
10

FIG. III-a

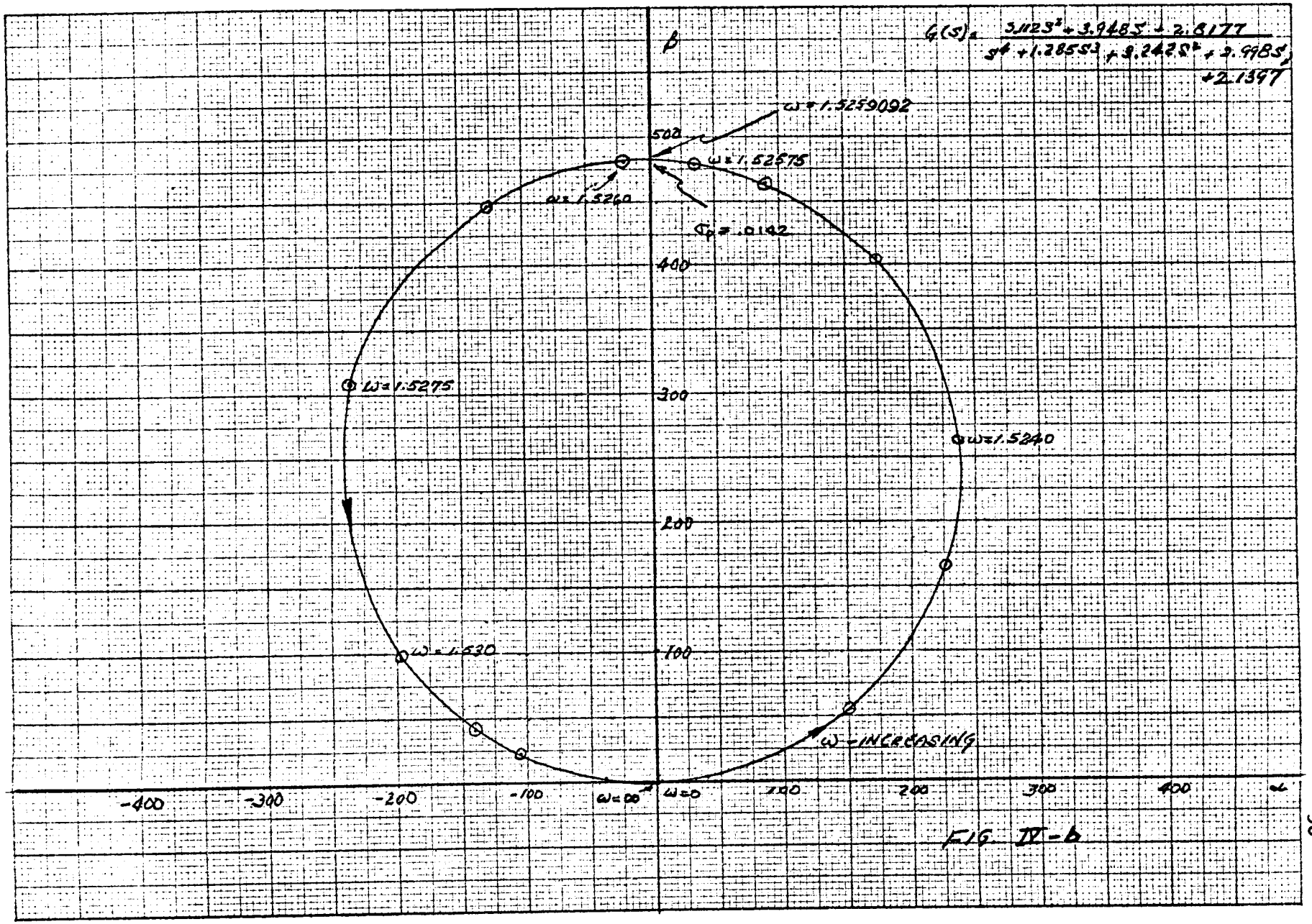
$G(s) = \frac{3.1123^2 + 3.9485 + 2.8177}{s^4 + 1.2855s^3 + 3.2425s^2 + 3.9985s + 2.1397}$
β
ω = 1.5259092
ω = 1.52575
ω = 1.5260
σ_p = .0142
ω = 1.5275
ω = 1.5240
ω = 1.530
ω - INCREASING
500
400
300
200
100
-400
-300
-200
-100
ω = ∞
ω = 0
100
200
300
400
α

FIG. IV-b

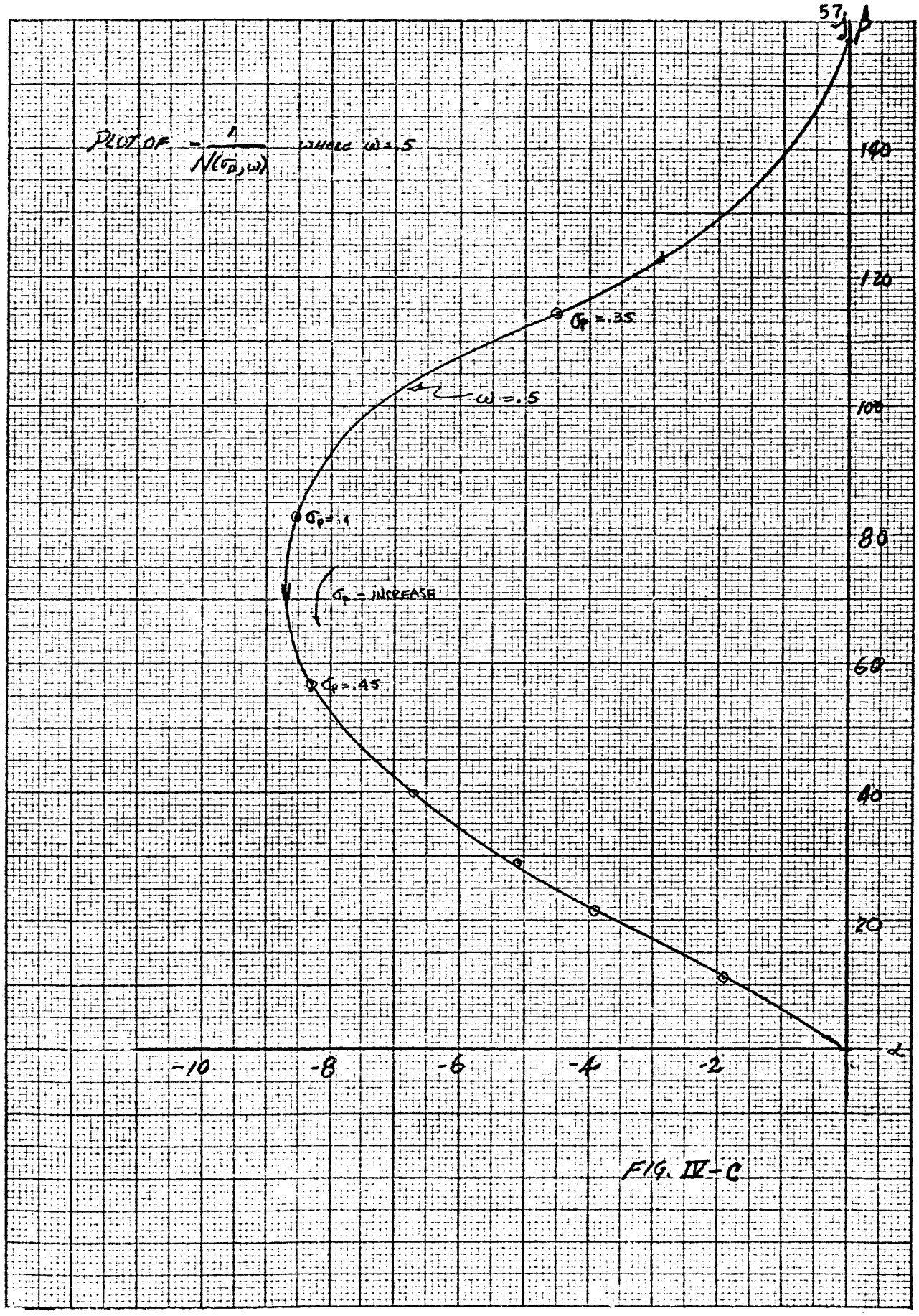
PLOT OF $-\frac{1}{N(\sigma_p,\omega)}$ WHERE $\omega = .5$
$\sigma_p = .35$
$\omega = .5$
$\sigma_p = .4$
σ_p - INCREASE
$\sigma_p = .45$
140
120
100
80
60
40
20
-10
-8
-6
-4
-2
α

FIG. IV-C

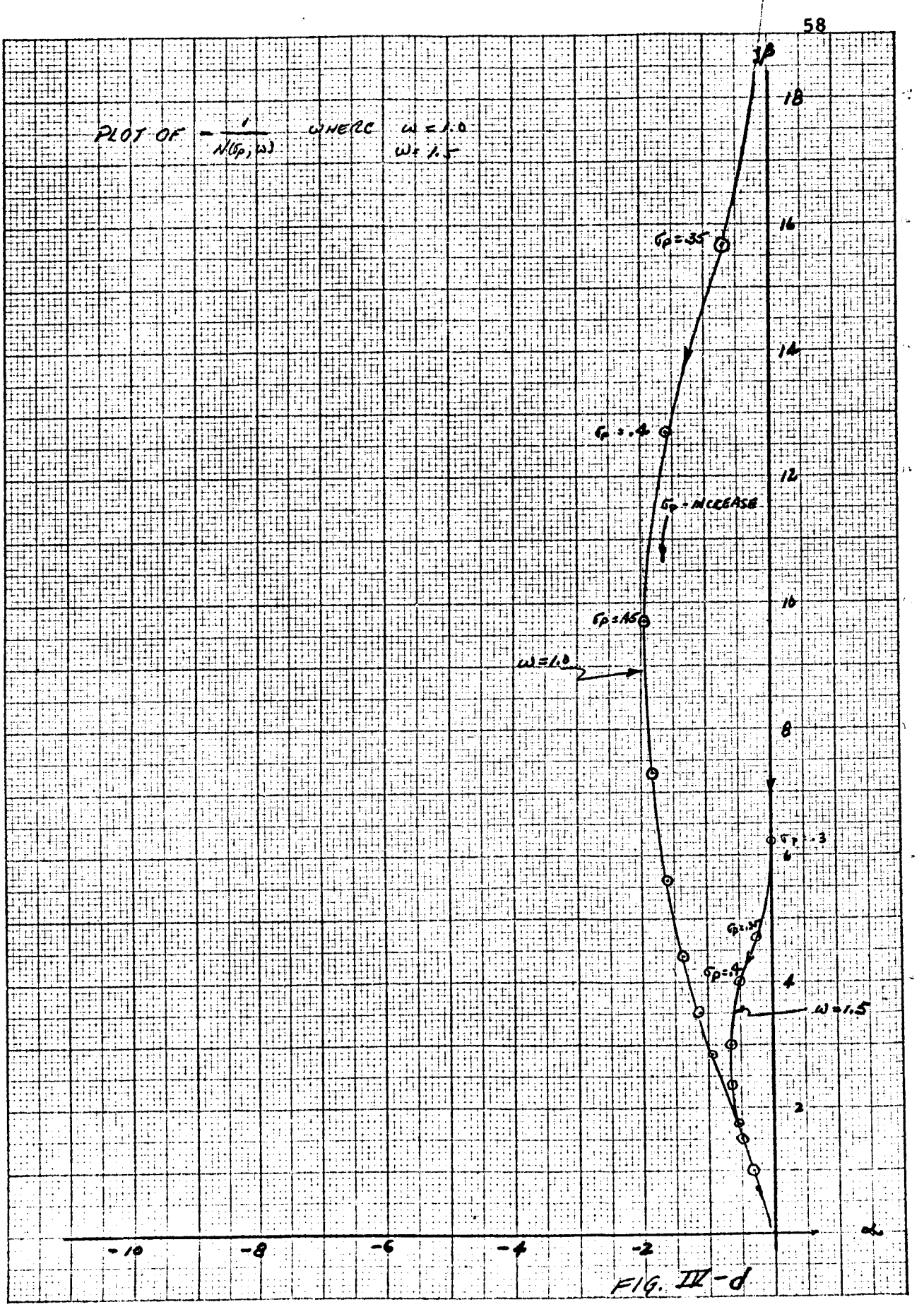
PLOT OF $-\frac{1}{N(\sigma_p,\omega)}$ WHERE $\omega = 1.0$
$\omega = 1.5$
$\sigma_p = .35$
$\sigma_p = .4$
σ_p - INCREASE
$\sigma_p = .45$
$\omega = 1.0$
$\sigma_p = .3$
$\sigma_p = .35$
$\sigma_p = .4$
$\omega = 1.5$
β
α
18
16
14
12
10
8
6
4
2
-10
-8
-6
-4
-2

FIG. III-d

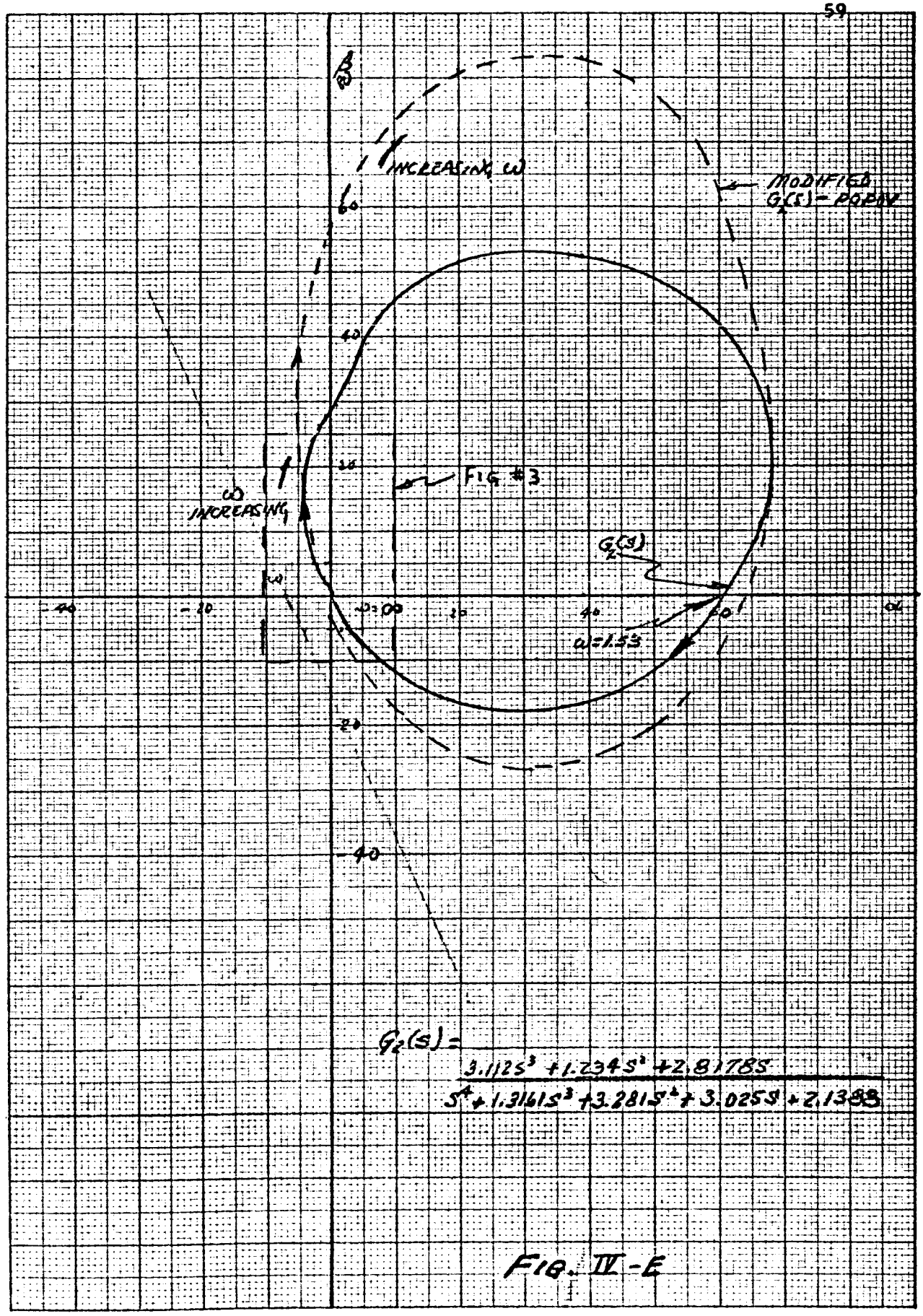

$$G_2(s) = \frac{3.1125s^3 + 1.234s^2 + 2.81785}{s^4 + 1.3161s^3 + 3.281s^2 + 3.025s + 2.1388}$$

FIG. IV-E

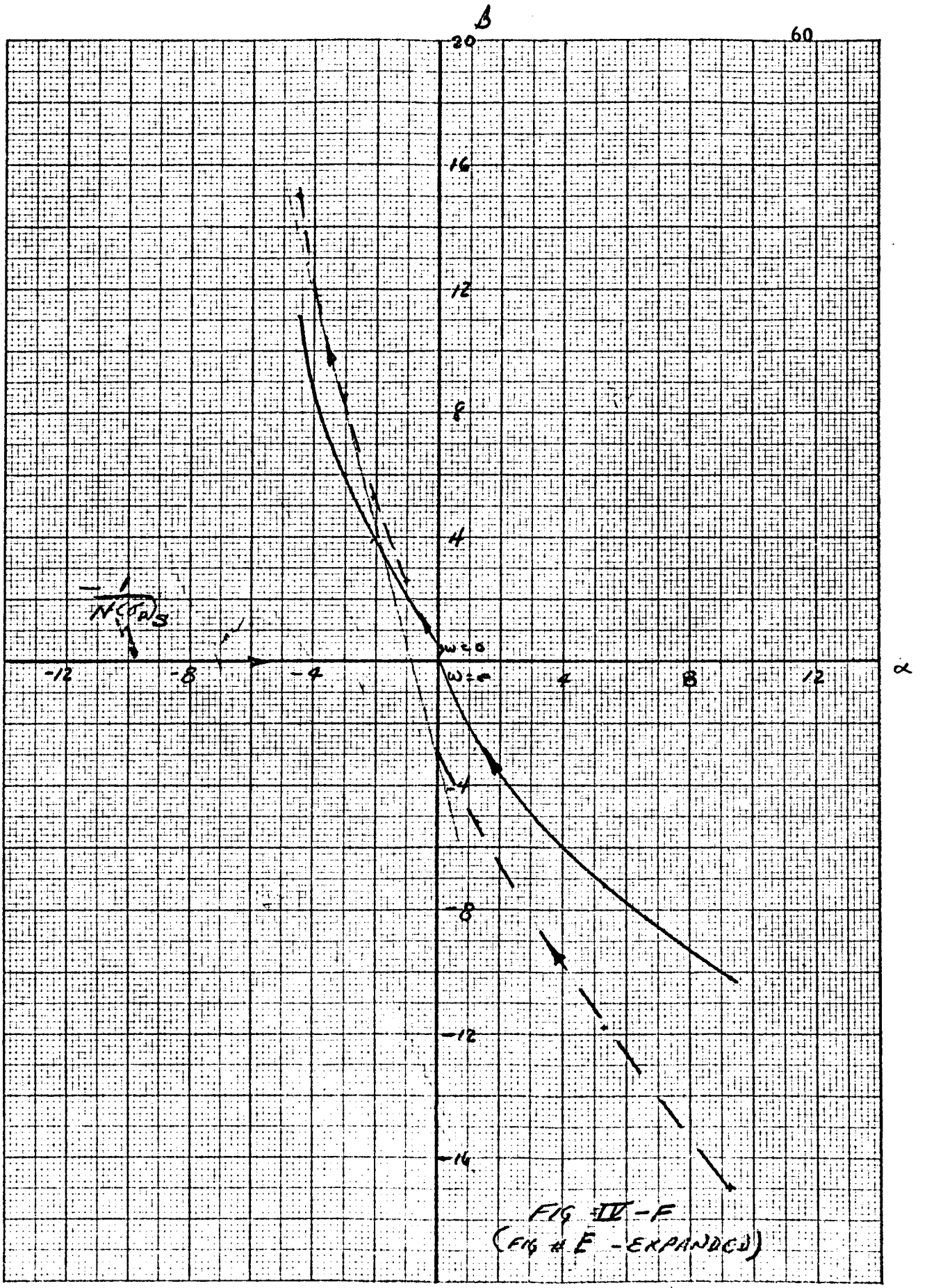

FIG IV-F
(FIG # E - EXPANDED)

C. Limitations

The primary limitation of the describing function method is the lack of assurance as to its validity in a given problem. The advantage of the method more than compensate for this liability. Among these advantages are the ease of application, the lack of the requirement for advanced mathematical tools.

The preliminary approach to analyzing or synthesizing a dynamical system is to linearize, so that the familiar methods of linear analysis may be applied. If the linear analysis is by means of the Nyquist criteria, then the extension to the Popov criteria, or the addition of a describing function to the procedure requires little additional work.

The Popov criteria has either an advantage or disadvantage according to the point of view in that its results are valid for a class of nonlinearities. Improved performance should be obtained if one considered the nature of the specific nonlinearity, but such considerations can not be treated within the framework of the method. The describing function on the other hand is applicable to specific nonlinearities, and variations in the specification of the nonlinearity is not easily handled.

When the Popov criteria is applied to a system one obtains sufficient conditions for global asymptotic stability. If this criteria is not satisfied no information about the system is obtained. In order to apply the Popov criteria it is necessary that the open loop transfer

system be asymptotically stable. If this requirement is not satisfied then one must require that the nonlinearity be represented as

$$F(\sigma) = \mu\sigma + G(\sigma)$$

under this assumption IV-1 becomes

$$\dot{x} = (A + \mu Bc^T)x + BG(\sigma) = A_1 x + BG(\sigma)$$

$$\sigma = c^T x$$

μ must be chosen such that A1 is stable. This restriction upon the nonlinearity $F(\sigma)$ is equivalent to requiring

$$\mu\sigma^2 \leq \sigma F(\sigma) \leq k\sigma^2$$

The Popov criteria is limited primarily to nonlinearities of the gain type. This restriction is not too undesirable since most engineering problems are of this nature. Extensions to more complicated nonlinearities of the hysteresis type have been reported in the literature.

The use of describing functions can be extended to more complicated nonlinearities, including nonlinear functions of more than one variable. For such extensions the ease of the graphical solution for the frequency of the limit cycles disappears. For nonlinearities of the gain type, the describing function contains no phase shift, so that the frequency in the first approximation of the limit cycle is determined solely by the linear portion of the system while the amplitude of oscillation is determined by the particular function. For energy storage nonlinearities such as hysteresis such easy identification is lost since the describing function will produce phase shift. For nonlinearities of more than one function, one generally obtains a family of describing function curves.

V. BOUNDEDNESS

The technique treated in the prior sections coupled with the Liapunov direct method comprise the primary tools for the analysis of the asymptotic behavior of control systems. These procedures lend themselves in particular to the identification of limit cycles whereas the direct method of Liapunov and the Popov criteria are applicable to the determination of asymptotic stability.

In the relm of nonlinear analysis many different phenomena other than limit cycle behavior exists. For example one may have solutions which are almost periodic or one may have solutions entering limit sets which are of a complicated structure. None of the preceeding techniques are adequate to analyze such phenomena.

In many practical problems where limit cycle behavior does exist, it is not necessary to completely identify this solution as to frequency, amplitude, etc. In most cases it is sufficient to have a reasonable bound upon such solutions. Such boundedness properties or "Lagrange Stability" have been treated by Yoshizawa (134, 135), Rekasius (136) and Szego (137).

In the application of the describing function method, the concept of boundedness was necessary for the mathematical legitimacy as proven by Bass. In the application of the Popov criteria one often encounters nonlinearities which are not contained completely within the Popov sector. What conclusions can one draw about such functions

will be answered here.

Consider the autonomous system

$$\dot{x} = F(x) \qquad \text{V-1}$$

Definition 1. The system V-1 is said to be bounded if for any $\alpha > 0$ there exists a positive number β such that if $\| X(t_0) \| < \alpha$ then $\| X(t) \| < \beta$ for all $t \geq t_0$.

Definition 2: The system V-1 is said to be ultimately bounded for the bound β if for any $\alpha > 0$ there exists positive numbers β and $T(\alpha)$ such that if $\| X(t_0) \| < \alpha$ then $\| X(t) \| < \beta$ for $t > t_0 + T$.

For linear homogeneous systems, the concept of stability of the origin and the concept of boundedness are equivalent. The two main theorems for the determination of boundedness are given as follows:

Theorem V-1: Let Ω^* be the region defined by $0 \leq t \leq \infty$, $\| X \| > r$. If there exists a function V(x) which is positive definite in the region Ω^* while its derivative

$$\frac{dV}{dt} = \nabla V^T \dot{x} = \nabla V^T F(x) \qquad \text{V-2}$$

is negative semi-definite in the interior of Ω^*, then the solutions of V-1 are bounded.

Theorem V-2: If there exist a function V(x) which is positive definite in Ω^*, while its derivative V-2 is negative definite in the interior of Ω^*, then the solutions of V-1 are ultimately bounded.

In the definition of the set Ω^*, r is set equal to zero, then the above theorems reduce to the theorems on stability and asymptotic

stability.

The main use to which we will apply the above theorems is as follows: consider the system

$$\begin{aligned} \dot{X} &= AX + BF(\sigma) \\ \dot{\sigma} &= C^T X - \gamma F(\sigma) \end{aligned} \qquad \text{V-3}$$

where it is assumed that

a) A is stable and b) V-3 is asymptotically stable for all non-linearities $\phi(\sigma)$ with

$$0 \leq \sigma \phi(\sigma) \leq k\sigma^2$$

We further assume that $F(\sigma)$ can be represented as

$$F(\sigma) = G(\sigma) + H(\sigma)$$

with

a) $0 \leq \sigma G(\sigma) \leq k\sigma^2$

b) $\lim_{\sigma \to \infty} G(\sigma) \to \infty$

c) $|H(\sigma)| < M$ for all σ

When $F(\sigma)$ is replaced by $G(\sigma)$, we know that the origin is asymptotically stable. Consider the Liapunov function

$$V = X^T Q X + \gamma \int_0^\sigma G(u)\, du \qquad \text{V-4}$$

Its derivative becomes

$$\dot{V} = X^T(A^TQ + QA)X + X^TQBG(\sigma) + G(\sigma)B^TQX + \gamma C^TXG(\sigma) - \gamma\gamma G^2(\sigma)$$

Since A is stable we have

$$A^TQ + QA = -P$$

where P is positive definite and $\dot{V}$ takes the form

$$\dot{V} = -X^T P X + X^T\left(QB + \frac{\gamma C}{2}\right)G(\sigma) + G(\sigma)\left(B^T Q + \frac{\gamma C^T}{2}\right)X - \gamma r G^2(\sigma) \qquad \text{V-5}$$

$$= -\begin{bmatrix} X^T & G(\sigma) \end{bmatrix} \begin{bmatrix} P & -\left(QB + \frac{\gamma C}{2}\right) \\ -\left(B^T Q + \frac{\gamma C^T}{2}\right) & \gamma r \end{bmatrix} \begin{bmatrix} X \\ G(\sigma) \end{bmatrix}$$

From Kalman (140) we know that $\dot{V}$ is negative definite thus insuring the asymptotic stability.

We now consider the same V function for system V-3. $\dot{V}$ will now change due to the presence of the term $H(\sigma)$. The new expression for $\dot{V}$ becomes

$$\dot{V} = -\begin{bmatrix} X^T & G(\sigma) \end{bmatrix} \begin{bmatrix} P & -\left(QB + \frac{\gamma C}{2}\right) \\ -\left(QB + \frac{\gamma C}{2}\right) & \gamma r \end{bmatrix} \begin{bmatrix} X \\ G(\sigma) \end{bmatrix} + \begin{bmatrix} X^T & G(\sigma) \end{bmatrix} \begin{bmatrix} 2QB \\ -\gamma r \end{bmatrix} H(\sigma) \qquad \text{V-6}$$

For the $\|Y\|$ sufficiently large where

$$Y^T = \begin{bmatrix} X^T & G \end{bmatrix}$$

V-6 will be negative definite. Since V is positive definite, this implies that all solutions are bounded in the variable X and $G(\sigma)$. From the condition $\lim_{\sigma \to \infty} G(\sigma) \to \infty$ this implies boundedness in the state variables X and σ.

For the Luré problem of direct control, a similar result is available. Consider the direct control problem in the form

$$\dot{X} = AX + BF(\sigma)$$
$$\sigma = C^T X \qquad \text{V-7}$$

with the same hypothesis on $F(\sigma)$ as before. Once again we assume V-7 is asymptotically stable for all nonlinearities with $0 \le \sigma\phi(\sigma) \le k\sigma^2$. As before we consider a V function of the form V-4.

$$V = X^T Q X + \gamma \int_0^\sigma G(u)\,du$$

$\dot{V}$ becomes

$$\dot{V} = X^T(A^TQ + QA)X + 2G(\sigma)\left(B^TQ + \frac{\gamma C^T A}{2}\right)X + \gamma C^T B F^2(\sigma)$$

We now add and subtract $\left(\sigma - \frac{G(\sigma)}{K}\right) G(\sigma)$ to $\dot{V}$

Regrouping we obtain

$$\dot{V} = -X^T P X - \left(\sqrt{r}\, G(\sigma) - q^T X\right)^2 - \left(\sigma - \frac{G(\sigma)}{K}\right) G(\sigma) \qquad \text{V-8}$$

where

$$A^TQ + QA = -P - qq^T$$
$$B^TQ + \frac{\gamma C^T A + C^T}{2} = \sqrt{r}\, q^T$$
$$r = \left(\frac{1}{K} - \gamma C^T B\right) \qquad r > 0$$

Thus V-8 is negative definite and V-7 is asymptotically stable with $F(\sigma)$ replaced by $G(\sigma)$. The change in V due to the representation of $F(\sigma)$ as $G(\sigma) + H(\sigma)$ becomes

$$\Delta \dot{V} = 2 B^T Q X H(\sigma) + \gamma G(\sigma) H(\sigma) C^T B$$

Thus for $|H| < r$ and the norm of $Y^T = [X^T \; G(\sigma)]$ sufficiently large we have $\dot{V}$ in negative definite implying boundedness of all solutions. The proof of the existence of the V functions of the above form will be given in Appendix C.

B. Application:

In order to demonstrate the approach which uses a Liapunov function to obtain bounds on the system, some results of the previous Chapter are used. Specifically, the system IV-21 and the results pertaining to the Popov criteria. Originally, the system was defined by I-5. In the frequency response techniques, it was modified to IV-21, where the nonlinearity, $\phi(\sigma)$, was not defined, but had the properties,

a) $0 < \sigma\phi(\sigma) < k_m \sigma^2$

b) $\lim_{\sigma \to \infty} \phi(\sigma) \to \infty$

By defining $\phi(\sigma) = k_1 \sigma$ where $k_1 = .011$, over the region of interest, the original nonlinearity F (σ) has the representation

$$F(\sigma) = k\sigma + k_1 \sigma + G(\sigma)$$

where K is the gain required to stabilize the matrix A, equation IV-21. Then G(σ) has the property that it is bounded for all σ, numerically

$$|G(\sigma)| \leq M = 0.0065$$

The system under consideration is I-5, but is represented as

$$\dot{X} = \tilde{A}X + b\left(\phi(\sigma) + G(\sigma)\right) \qquad \text{V-10}$$
$$\sigma = C^T X$$

where $\tilde{A}$, b, c were numerically defined in Chapter IV. It is known that system IV-21 satisfies Popov's criteria, i.e., there exists a "γ" such

that

$$\frac{1}{k_m} + Re\left\{(1+i\omega\gamma)(C^T(i\omega I-\tilde{A})^{-1}b\right\} > 0$$

for all real ω . Numerically the value selected for γ and k_m were -0.5 and 0.142857 respectively. From this result a Liapunov function of the form

$$V = X^T Q X + \gamma\int_0^\sigma \phi(u)\,du$$

may be constructed by applying the Kalman-Yakubovich Lemma (138). The details of this construction is shown in Appendix C. The Lemma basically states: Given a stable matrix A, a positive definite symmetric D, real vectors h and k, h $\neq$ 0 and scalars $\tau \geq 0$, $\epsilon > 0$ then a necessary and sufficient condition for the existence of a matrix B and a vector q which satisfies the conditions

a) $A^T B + BA = -(qq^T + \epsilon D)$

b) $Bh - k = \sqrt{\tau}\, q$

is that ϵ is small and the relation

$$\tau + 2\,Re\left\{k^T(i\omega I - A)^{-1}h\right\} > 0$$

is satisfied for all real ω .

Numerically, the vector q was obtained to be

$$q^T = \begin{bmatrix} .5865 & .4386 & .6012 & -.1562 \end{bmatrix}$$

and the matrix ϵD was defined as λI where I is the identity matrix, and $\lambda = 2.32534 \times 10^{-3}$. By transforming the matrices qq^T and λ I back into the original coordinate system through the matrix E (see Appendix D), and applying the ASP program to compute

the steady state solution to the riccati equation

$$-\dot{Q} = A^T Q + QA + P$$

the Liapunov function was completely identified for system IV-21.

Numerically,

$$Q = \begin{bmatrix} .3183 & -4.023(10^{-3}) & -1.716 & .2547 \\ -4.023(10^{-3}) & .1371 & .1688 & -.7637 \\ -1.716 & .1688 & 561.1 & 276.4 \\ .2547 & -.7637 & 276.4 & 234.8 \end{bmatrix}$$

Using the same Liapunov function for system V-10, the derivative of the V -function has the representation:

$$\dot{V} = \left[x^T \phi(\sigma)\right] \begin{bmatrix} P & -\sqrt{r}\, q \\ -\sqrt{r}\, q^T & r \end{bmatrix} \begin{bmatrix} x \\ \phi(\sigma) \end{bmatrix} + \left[x^T \phi(\sigma)\right] \begin{bmatrix} 2Qb \\ \gamma r \end{bmatrix} M$$

where $r = 5.444$, P, q, Q, γ ,M are defined previously. For $\|x\| = 3.75$ where the norm was defined as

$$\|x\| = \max_i \left|\lambda_i x_i\right|$$

and $\lambda_1 = 1.0$, $\lambda_2 = .816$, $\lambda_3 = 2.7426 \times 10^7$, $\lambda_4 = 1.688 \times 10^6$, $\dot{r}$ has a minimum value of -6.34×10^{-3}. The Liapunov function (V) has a maximum value for this norm of 4.536. Since V is positive definite and $\dot{V}$ is negative definite for $\|x\| = 3.75$, this defines a bound for the systems.

C. Limitations

In the application of Liapunov Functions to the determination of boundedness or Lagrange Stability one is faced with the usual problem of obtaining a good choice for a Liapunov function. By good is meant a Liapunov function which is easy to generate and which gives tight bounds on the state variables.

In the application of these methods to the Luré type of problem we utilized a Liapunov function whose construction was due to Kalman. The part of this function which can be chosen arbitrarily to insure the negative definiteness of $\dot{V}$ is decreasingly small as the Popov line approaches tangency to the modified open loop transfer function. The closer we approach tangency the smaller becomes the bound on the nonlinear excursion from the Popov region. Thus one is confronted with a compromise as to the choice of the Popov line.

In order to determine the region of boundedness one must first find the surface $\|x\| = c$ on which $\dot{V}$ is negative. On this surface one then examines $\max_{\|x\|=C} V(x)$. The region of boundedness is then given by $V(x) = C_1 = \max_{\|x\|=C} V(x)$. In the practical determination of a sufficiently tight bound the proper choices for the norm must be made. The computation of $\dot{V}$ on $\|x\| = C$ and the computation of $\max_{\|x\|=C} V(x)$ can be prohibitive with a poor choice of the norm.

In order to simplify the computational requirements the norm chosen in the above presentation is

$$\|x\| = \max_i |\lambda_i x_i|$$

In the construction of the Liapunov Function by means of the Kalman procedure, one must be able to determine the roots of a polynomial whose roots are symmetric about both the real and imaginary axes. In such constructions by the authors, some of these roots had very small real part and this posed difficulties in the root extraction program.

VI. CONCLUSIONS AND RECOMMENDATIONS

In the determination of the asymptotic behavior of control systems, four basic procedures were examined in some detail. These procedures were not independent but in many respects they overlapped and supported each other. For example the describing function or equivalent linearization is very similar to the perturbation method. Its parallels to the Popov criteria are even more apparent. For a nonenergy storing nonlinearity, the describing function is real and lies on the negative real axis. It appears in this case that the describing function is identical to the Aizerman conjecture.

For the analysis of high order systems all methods except the frequency response procedures pose severe computational limitations. Under suitable restriction these requirements may be relaxed somewhat as for example symmetry in the nonlinear characteristic reduces the set of equations to be solved in the piecewise linearization procedure. Oftentimes the complete simulation of the nonlinear system is less complicated then the solution of the equations associated with the various analytical approaches.

For a practical approach to the analysis of a complex system the procedures to be used should be evolutionary, that is each step should be an extension of the previous step. Since basically the first step in a design is to linearize and make use of a Nyquist type of analysis, this analysis could be based upon the modified transfer function of Popov. The addition of a describing function or the construction of the

Popov criteria is a straightforward extension of these classical approaches where applicable. If a limit cycle is predicted and more precision is required in determining its wave shape and frequency, then the perturbation procedures can be applied to extract these results.

For systems with nonlinearities of a more complex nature, one is then forced to one or more of the more complicated procedures such as piecewise linearization or the use of the second method to determine either stability or boundedness properties.

Many problem areas touched upon in this report need further resolution and extension. Adequate computational procedures for the solution of systems of transendental equations and the extraction of roots of high order polynomials are in need of development. Work is needed in procedures for the generation of Liapunov functions coupled with suitable norms to obtain tight bounds on limit sets.

All procedures in this report were restricted to autonomous systems, whereas in most boost vehicles the systems under consideration are nonstationary. Few if any of the discussed procedures will extend to the non-autonomous problem. Thus the analysis of the asymptotic behavior of time varying systems is still in need of clarification.

APPENDIX A

BIBLIOGRAPHY

During the first three months of this program a survey of the literature pertaining to the asymptotic behavior of the solutions of nonlinear differential equations was made. In particular, procedures were sought for locating and identifying periodic solutions and limit cycles. In this search, five general classes of methodology were identified namely, (1) perturbation methods, (2) topological or phase plane methods, (3) frequency response methods or describing functions and (4) piecewise linearizations and point transformation, (5) boundedness and Lagrange stability.

These five methods are not really as distinct as we have indicated since they are all interrelated mathematically. Thus the methods classified under (3) are just special cases of the perturbation methods. The approach of point transformations with fixed point theorems form the basis of all existence theorems for periodic solutions. Even with this overlap, the above classification seems to be a practical point of view and they will be tabulated.

(1) Perturbation Methods: The perturbation method consists in expressing the solution to a set of differential equations in terms of a power series in a small parameter. The terms of this series may be obtained in terms of solutions of a sequence of linear nonhomogeneous equations. Thus in principal the solution may be approximated as accurately as desired by considering additional

terms of the series. Various methods of modifying the procedure to eliminate the so-called secular terms have been introduced and herein lies the main difference between the various perturbation methods.

Hale's procedure has been discussed in detail in Chapter II of the text, since many general problems may be inbedded into this general format including the forced nonlinear system and the autonomous system.

Krylov and Bogoliubov developed a procedure which leads to a method of averaging, when with a periodic solution of autonomous nonlinear equations. Basically, it assumes the solution has the form of

$$x = A\cos(\omega t + \phi)$$

where the amplitude (A) and the phase shift (ϕ) are non-constant. A set of differential equations are obtained for A and ϕ , by applying the variation of parameter approach. From these resulting differential equations ϕ may be expected to vary proportionally with the d.c. term, while the periodic solution should be given by equating the average value to zero and thereby obtaining the amplitude.

Many problems of periodic nature may be found in Russian literature solved by the method of harmonic balance. This method basically assumes a solution in terms of a fourier series and then determines the coefficients by equating like harmonics. This procedure has been successfully applied by Bass (99), Wasow (82) and others.

For a treatment of perturbation methods, the texts by Hale (10) and Malkin (13) are excellent. Sections of Stoker (16) and Andronow and Chaikin (2) treat a number of second order systems. In these texts the presentation is suitable for the particular problem but does not generalize to a broader class of problems. The text by Cesari (3) has an excellent bibliography. Presentations slanted more for the engineer are given by Hayashi (11), Minorsky (15) and Ku (12).

Periodic solutions for forced nonlinear systems are given by Elgerd (30), Plotnikov (57), Struble (72). Once a periodic solution of a nonlinear system is found, its stability needs to be investigated. This process results in the study of a linear perturbation equation with periodic coefficients. Stability is expressed in terms of either the characteristic multipliers or characteristic exponents. The linear equation with periodic coefficients. Stability is expressed in terms of either the characteristic multipliers or characteristic exponents. The linear equation with periodic coefficients is treated by Hale (32, 33) Struble (75), while the determination of characteristic exponents and stability is given by Hale (36, 40), Nohel (50), Ruiz (66), Sandberg(67) and Sibuya (69).

The existence of periodic solutions of autonomous systems is complicated by the fact that the period is not known in advance and must be treated in terms of additional perturbation terms. Methods of determining such solutions is given by Hale (10), Proskuriakov (59, 60), and Loud (47).

(2) Phase Plane and Topological Methods: Phase Plane methods are primarily graphical procedures for obtaining the totality of solutions for autonomous nonlinear second order systems. Much of the literature is concerned with the identification of the singular points and their classification. For linear systems, the only type of singular points which can occur are 1) node, 2) focus, 3) saddle point, 4) center. A center is characteristic of periodic solutions, while saddle points always imply an unstable system. Nodes and foci may be either stable or unstable. The topological structure of the phase portraits for nonlinear systems is much more involved. Many singular points may exist in contract to the existence of a single singular point for linear systems. Isolated closed paths representing limit cycles also may exist. All solutions may approach the limit cycles, in which case they are said to be stable. Applications to the design of relay controls are too numerous to list.

The main results on the existence of limit cycles is due to Poincare-Bendixon. However, since the results are in the nature of existence theorems and do not aid in the location of identification of limit cycles. A procedure for determining limit cycles based upon a similar concept is by the use of a Liapunov function to show (1) instability of the equilibrium point and (2) boundedness of the solution which will be discussed later.

Phase plane procedures may be extended to dimensions greater than two, but in practice the geometric insight is lost. Of course the concepts of a phase space and its associated notation has influenced most of modern theory where state vector notation is used almost exclusively. Ku (91) uses a phase space for a third order system.

A detailed treatment of phase plane analysis may be found in the texts by Andronow and Chaikin (2), and Minorsky (15).

Alternate methods of constructing phase portraits are given by Buland (86) and Hsia (90).

Fixed point theorems form the basis of theorems on the existence and uniqueness of periodic solutions. Such results are given by Benes(85), Diliberto (88), Lakshmikantham (93).

(3) Frequency Response Methods: The frequency response techniques for analyzing nonlinear systems has been justifiably popular with engineers. The popularity stems from the simplicity of application and that it extends techniques with which he is familiar. However no explanation of either technique will be given since Chapter IV of the text was devoted to this subject, along with an example.

A detailed treatment of describing function and Nyquist analysis may be found in most texts on Control Systems. The texts by Gibson (8) and Truxel (17) are particularly outstanding. Popov's criteria may be found in detail in Aizerman and Gantmacher (1).

Applications of such methods to practical control problems abounds in the technical literature starting with the results of Kochenburger (112, 113). Bass (98, 99) in particular has examined the validity of this method and gives complete results for odd types of nonlinearities. Choksy (104) gives criteria for the stability of the postulated limit cycles by an examination of the tangents to the describing function. Gibson (106) gives a detailed treatment of the computational aspects and tabulates many describing functions for often occurring nonlinearities.

(4) Piecewise Linearization and Point Transformation: For systems with large nonlinearities and of dimension greater than two, the perturbation and phase plane methods are of little value in determining periodic solutions. The point transformation, or piecewise linearization method has been previously discussed and shown that theoretically this is one technique which is applicable. However due to computational difficulties the ASP (Automatic Synthesis Program) digital program was used to obtain a periodic solution, which is still a piecewise linearization technique.

The problem was solving the set of transendental for the unknown times t_i. Kovatch (129, 130) has applied this approach to systems with one or more nonlinearities to determine symmetric limit cycles. A similar approach to finding the transendental equations for the unknown times but using a single differential equation of high order is given by Gusev. Grayson and Mishkin (127) combine phase plane procedures

with piecewise linearizations to analyze third order systems. Stability of piecewise linear systems is given by Belya (123). The work of André and Siebert (122) is concerned with behavior of solutions at switching planes and in the switching surfaces.

(5) Boundedness and Lagrange Stability: The existence of limit cycles or limit sets may be determined by showing instability of the origin and Lagrange stability or boundedness. A procedure for the construction of a Liapunov function which will yield this information is given by Szego (95). However as shown in the boundedness section of the text, Kalman's (128) construction of a Liapunov function may be utilized in obtaining boundedness results.

BIBLIOGRAPHY

TEXTS

1) Aizerman, M. A. and Gantmacher, F. R., "Absolute Stability of Regulator Systems", Holden-Day, Inc., San Francisco, 1964.

2) Andronow, A. A. and Chaikin, C. E., "Theory of Oscillations", Princeton Press, 1949.

3) Cesari, L., "Asymptotic Behavior and Stability Problems in Ordinary Differential Equations", Ergebn., Heft 16, Springer-Verlag OHG, Berlin, 1959.

4) Coddington, E. A. and Levinson, N., "Theory of Ordinary Differential Equations", McGraw-Hill, 1955.

5) Cosgriff, R.L., "Nonlinear Control Systems", McGraw-Hill, 1958.

6) Cunningham, W.J., "Introduction to Nonlinear Analysis", McGraw-Hill, 1958.

7) Davis, H., "Introduction to Nonlinear Differential Equations and Integral Equations", U.S. Atomic Energy Commission, 1960.

8) Gibson, J.E., "Nonlinear Automatic Control", McGraw-Hill, 1963.

9) Gille, J.C., Decaulne, P. and Pelegrin, M.J., "Feedback Control Systems", McGraw-Hill, 1959.

10) Hale, J.K., "Oscillations in Nonlinear Systems", McGraw-Hill, 1963.

11) Hayashi, C., "Nonlinear Oscillations in Physical Systems", McGraw-Hill, 1964.

12) Ku, Y.H., "Analysis and Control of Nonlinear Systems", Ronald Press Co., 1958.

13) Malkin, I.G., "Some Problems in the Theory of Nonlinear Oscillations", U.S. Atomic Energy Commission, Technical Information Service, Translation Series, AEC-tr-3766, Book 1 and 2.

14) Malkin, I.G., "Theory of Stability of Motion", Moscow, Atomic Energy Commission, Translation, AEC-tr-3352.

15) Minorsky, N., "Nonlinear Oscillations", D. Van Nostrand Co., 1962.

16) Stoker, J.J., "Nonlinear Vibrations in Mechanical and Electrical Systems", Interscience Publishers, Inc., 1950.

17) Truxel, J.D., "Control Systems Synthesis", McGraw-Hill, 1955.

PERTURBATION METHODS

18) Arkhangel'skii, Iu. A., "Periodic Solutions of Quasilinear Autonomous Systems Which Have First Integrals", PMM, Vol. 27, No. 2, 1963.

19) Bailey, H.R. and Gambill, R.A., "On Stability of Periodic Solutions of Weakly Nonlinear Differential Systems", Journal of Mathematics and Mechanics, No. 6, 1957. Pgs. 655-668.

20) Blais, K. W. and Loud, W. S., "Periodic Solutions of under Variation of Certain Parameter", Siam Journal, Vol. 8, No. 2, April, 1950. Pgs. 74-101.

21) Blekman, I.I. and Dzhanelidze, G. Iu., "On The Stability of Vibrationally Linearized Nonlinear Systems", PMM, VOL. 25, No. 1, 1961.

22) Bogoliubov, N. and Mitropolsky, Yu. A., "The Method of Integral Manifolds in Nonlinear Mechanics", Contributions to Differential Equations, Vol. II., 1963. Pg. 123.

23) Bogoliubov, N. and Sadovnikov, B.I., "On Periodic Solution of Differential Equations of The nth Order With A Small Parameter", Symposium on Nonlinear Vibration, Kiev, U.S.S.R., Sept., 1961.

24) Cartwright, M.L., "Forced Oscillations in Nonlinear Systems", Contributions to The Theory of Nonlinear Oscillations, Vol. 1, Ann. of Math. Studies, Princeton Press, 1950. Pgs. 149-241.

25) Cesari, L., "Functional Analysis and Periodic Solutions of Nonlinear Differential Equations", Contributions to Differential Equations, Vol. 1, Interscience Publishers, Inc., 1962. Pg. 149.

26) Cesari, L., "Existence Theorems for Periodic Solutions of Nonlinear Lipschitzian Differential Systems and Fixed Point Theorems" Contributions to The Theory of Nonlinear Oscillations, Vol. V.

27) Cesari, L. and Hale, J.K., "A New Sufficient Condition for Periodic Solutions of Weakly Nonlinear Differential Systems", Proceedings of The American Math. Society, Vol VIII., No. 4, Pgs. 757-764, Aug., 1957.

28) Cesari, L. and Hale, J.K., "Second Order Linear Differential Equations With Periodic L-integrable Coefficients", Riv. Mat. Univ. Parma, No. 5, 1954. Pgs. 55-61.

29) Diliberto, S.P., "Perturbation Theorems for Periodic Surfaces", Circ. Mat. Palermo (2), No. 9, 1960. Pgs. 265-299.

30) Elgerd, O., "A Study of Asychronously Excited Oscillation in Nonlinear Control Systems", Trans. on Automatic Control, Vol. AC-5, No. 3, Aug. 1960. Pgs. 179-192.

31) Friedrichs, K.O., "Fundamentals of Poincare's Theory", Proc. of the Symposium on Nonlinear Circuits, PIB, Microwave Research Instit., April, 1963, pgs. 56-57.

32) Hale, J.K., "Linear Systems of First and Second Order Differential Equations with Periodic Coefficients", Illinois Journal of Mathematics, Vol. II, 1958. Pgs. 586-591.

33) Hale, J.K., "On The Behavior of the Solutions of Linear Periodic Differential Systems Near Resonance Points", Contributions to the Theory of Nonlinear Oscillations, Vol. 5. Pgs. 55-89.

34) Hale, J.K. and Gambill, R. A., "Subharmonic and Ultraharmonic Solution for Weakly Nonlinear Systems", Journal of Rational Mechanics & Analysis, Vol. V., No. 2, Mar. 1956.

35) Hale, J.K., "On Differential Equations Containing a Small Parameter", Contributions to Differential Equations, Vol. I, Interscience Publishers, 1962.

36) Hale, J.K., "On the Characteristic Exponents of Linear Periodic Differential Systems", Boletin De La Sociedad Matematica, Mexicana, 1961.

37) Hale, J.K., "Periodic Solutions of Nonlinear Systems of Differential Equations", Rivista Mat., Univ. Parma, 5. Pgs. 281-311, 1954.

38) Hale, J. K. and Onuchic, N., "On The Asymptotic Behavior of Solutions of a Class of Differential Equations", Contributions to Differential Equations, Vol. II, 1963.

39) Hale, J.K., "On Differential Equations Containing A Small Parameter". Office of Naval Research, Tech. Report, No. 6, Sept. 1960.

40) Hale, J.K., "On the Stability of Periodic Solutions of Weakly Nonlinear Periodic and Autonomous Differential Systems", Contributions To The Theory of Nonlinear Oscillations, Vol. V.

41) Heinbockel, J. H. and Struble, R.A., "The Existence of Periodic Solutions of Nonlinear Oscillators", Siam, Vol. XIII, No. 1, Mar. 1963. Pgs 6-36.

42) Kill, I.D., "On Periodic Solutions of a Certain Nonlinear Equation", PMM, Vol. XXVII, No. 6, 1963.

43) Kislyakov, V.S., "Application of the Krylov-Bogoliubov Method of Constructing Asymptotic Approximations to the Investigation of Systems With Lags", Avtomat Telemekh (U.S.S.R.), Vol. XXI, No. 4, 1960.

44) Kolovskii, M.F., "On Conditions For The Existence of Periodic Solutions of Systems of Differential Equations With Continuous Right-Hand Sides Containing Small Parameters", PMM, Vol. XXIV, No. 4, 1960.

45) Krylov, N. and Bogoliubov, N., "Introductions to Nonlinear Mechanics", Princeton Press, 1949.

46) Kyner, W.T., "Small Periodic Perturbations of an Autonomous System of Vector Equations", Contributions to the Theory of Nonlinear Oscillations, Vol. IV, Pgs. 111-125, Anns of Math. Studies, No. 41, Princeton Press, 1958.

47) Loud, W. S., "Periodic Solutions of Perturbed Second-Order Autonomous Equations", Vol. I, II, III, or No. 226, April, 1961 No. 187, Nov., 1960, MRC Tech. Summary Report, Univ. of Wisconsin.

48) Loud, W.S., "Locking-In In Perturbed Autonomous System", Symposium on Nonlinear Vibration, Kiev, U.S.S.R., Sept., 1961.

49) Neimark, In.I. and Shilnikov, L.P., "The Investigation of Dynamic Systems Which Are Almost Piecewise Linear", Izvest. Vuzov, Radio-Fizika, Vol. III, No. 3, 1960.

50) Nohel, J.A., "Stability of Perturbed Periodic Motions", MRC, Tech., Summary Report, No. 84, Mar. 1959.

51) Maksimov, A.D., "Approximate Solution To A Nonlinear Differential Equation of the Third Order With The N.N. Bogoliubov Asymptotic Method", NASA Technical Trans., NASA TT-F133, Jan., 1963.

52) Minorsky, N., "Theoretical Aspects of Nonlinear Oscillations", IRE Transactions on Circuit Theory, Vol. CT-7, No. 4, Dec., 1960.

53) Mitropol'skiy, Y.A., "The Method of Integral Manifolds in the Theory of Nonlinear Oscillations", Nonlinear Differential Equations and Nonlinear Mechanics, Lefschetz, S., and LaSalle, J.P., Academic Press, 1963.

54) Moser, Jurgen, "Perturbation Theory for Almost Periodic Solutions for Undamped Nonlinear Differential Equations", Nonlinear Differential Equations and Nonlinear Mechanics, Lefschetz, S., and LaSalle, J.P., Academic Press, 1963.

55) Moser, J., "New Aspects In the Theory of Stability of Hamiltonian System", Pure Appl. Math., Vol. IX., 1958, Pgs. 81-114.

56) Pacheco de Figueiredo, Rui, "Existence and Uniqueness of the Periodic Solutions of An Equation for Autonomous Oscillations", Contributions to the Theory of Nonlinear Oscillations, Vol. V, Princeton Press, pgs. 269-284.

57) Plotnikov, G.V., "On the Construction of Periodic Solutions of Non-Autonomous Quasilinear System with Two Degrees of Freedom", PMM. Vol. XXVII, No. 2, 1963.

58) Proskuriakov, A.P., "Periodic Solutions of Quasilinear Autonomous Systems With One Degree of Freedom In the Form of Infinite Series with Fractional Power of the Parameter", PMM, Vol. XXV., No. 5, 1961.

59) Proskuriakov, A.P., "Periodic Oscillations of Quasilinear Autonomous Systems with Two Degrees of Freedom", PMM, Vol. XXIV., No. 6, 1960.

60) Proskuriakov, A.P., "On A Property of Periodic Solutions of Quasilinear Autonomous Systems with Several Degrees of Freedom", PMM, Vol. XXIV., No. 4, 1960.

61) Proskuriakov, A.P., "On the Construction of Periodic Solutions of Quasilinear Autonomous Systems with Several Degrees of Freedom", PMM, Vol. XXVI., No. 2, 1962.

62) Proskuriakov, A.P., "Stability of Periodic Solutions of Quasilinear Autonomous Systems with One Degree of Freedom", PMM, Vol. XXVII., No. 3, 1963.

63) Puchenkin, G.N., "On A Problem of the Theory of Nonlinear Oscillations", PMM, Vol. XXV., No. 5, 1961.

64) Putzer, E.J., "On Certain Systems of Nonlinear Differential Equations", SIAM, Vol. XII., No. 1, Pgs. 60-73, Mar., 1964.

65) Rang, E. R., "Periodic Solutions of Singular Perturbation Problems", LaSalle and Lefschetz, Nonlinear Differential Equations and Nonlinear Mechanics, Academic Press, 1963.

66) Ruiz, A., "Unstable Characteristics of a Class of Functions Defined By Linear Differential Equations With Periodic Coefficients", SIAM, Vol. 11, No. 1, Pgs. 148-158, Mar., 1963.

67) Sandberg, I.W., "On the Stability of Solutions of Linear Differential Equations With Periodic Coefficients", SIAM, Vol. XII., No. 2, Pgs. 487-496, June, 1964.

68) Serebriakova, N.N., "On Periodic Solutions of the Second Order Dynamic System", PMM. Vol. XXVII., No. 2, 1963.

69) Sibuya, Yasutaka, "Remarks On the Stability of Perturbed Periodic Solutions", Math Research Center Tech. Summary Report, No. 102, Aug., 1959.

70) Struble, Raimond, A., "An Application of the Method of Averaging in the Theory of Satellite Motion", Journal of Math. and Mechanics, Vol. X., No. 5, Sept. 1961.

71) Struble, Raimond, A., "On the Simple Pendulum Under Periodic Disturbance", N.C. State College, Departments of Math and Engineering Research Tech., Memo. No. 9, Oct., 1961.

72) Struble, Raimond, A., "Oscillations of Pendulum Under Parametric Excitation", N.C. State College, Departments of Math and Engineering Research Tech., Memo. No. 9, Oct., 1961.

73) Struble, Raimond, A., "Resonant Oscillations of the Duffing Equations", Contributions to Duffing Equations, Vol. II., 1963, Pg. 484.

74) Struble, Raimond, A., "A Discussion of the Duffing Equations", SIAM, Vol. 11, No. 3, Pgs. 659-666, Sept., 1963.

75) Struble, Raimond, A. and Fletcher, I.E., "General Perturbational Solution of The Mathieu Equation", SIAM, Vol. X., No. 2, Pgs. 314-328, June, 1962.

76) Torng, H.C., "On Periodic Modes of Saturating Discrete Control Systems", J. Frank, Inst., Vol. 274., No. 5, 1962.

77) Stoker, J.J., "Nonlinear Vibrations of Systems With Several Degrees of Freedom", Proc. Second U.S. Nat. Congress Appl. Mech., June, 1954; Trans. ASME, 1955, Pgs. 33-34.

78) Tsypkin, Y.F., "Investigation of Stability of Periodic States in Nonlinear Pulse Automatic Systems", Automatic and Remote Control, Vol. XII., No. 6, June, 1961.

79) Urabe, Minoru, "Periodic Solutions of Van Der Pol's Equations With Damping Coefficients , IRE Trans., On Circuit Theory, Vol. CT-7, No. 4, Dec. 1960.

80) Urabe, Monoru, "Numerical Analysis In Theory of Nonlinear Oscillations Computation of Periodic Solutions of Van Der Pol's Equations." To be published.

81) Wasow, W.R., "Singular Perturbation Methods for Nonlinear Oscillations", Proceedings of the Symposium on Nonlinear Circuit Analysis, PIB, Microwave Research Inst., April, 1953, Pgs. 75-98.

82) Wasow, W.R., "Solutions of Certain Nonlinear Differential Equations By Series of Exponential Functions", Illinois Journal of Math, 1958, Pgs. 254-260.

83) Willoughby, R.A., "An Analysis of the Bistability of the Parametron", Internal. Symposium on the Nonlinear Differential Equations and Nonlinear Mechanics., Edit. LaSalle, J.P. and Lefschetz, S., Academic Press, 1963.

TOPOLOGICAL AND PHASE PLANE METHOD

84) Andre, J. and Seibert, P., "Piecewise Continuous Differential Equations", Boletin De La Sociedad Matematica, Mexicana, 1961.

85) Benes, V.E., "Ultimately Periodic Behavior In a Class of Nonlinear Servomechanisms", LaSalle, J.P. and Lefschetz, S., International Symposium on Nonlinear Differential Equations and Nonlinear Mechanics, Academic Press, 1963. Pgs. 384-392.

86) Buland, R.N., "Phase-Plane-Delta Method", J. Franklin Inst., Vo. 257, 1954, Pgs. 37-48.

87) DeVogelaere, R., "On The Structure of Symmetric Periodic Solutions of Conservative Systems, With Applications", Contributions To the Theory of Nonlinear Oscillations, Annals of Math Studies, No. 41.

88) Diliberto, S.P. and Marcus, M.D., "A Note On The Existence of Periodic Solutions of Differential Equations", Contrib. To The Theory of Nonlinear Oscillations, Vol. III., No. 36., Princeton Press, 1956.

89) Farrah, H.R., "A Nonlinear Analysis Technique For An On-Off Servo With Velocity Inputs", J.A.C., Vol. AC-7, No. 2, 1962.

90) Hsia, P.S., "Agraphical Analysis For Nonlinear Systems", Proceedings IEE, Vol. 99, Part 2, 1952, Pgs. 125-134.

91) Ku, Y.H., "Acceleration Plane Method For Nonlinear Oscillations", Proceedings of the Symposium on Nonlinear Circuit Analysis, PIB. Microwave Research Inst., 1953, Pgs. 129-153.

92) Ku, Y.H., "A Method For Solving Third and Higher Order Nonlinear Differential Equations", J. Franklin Inst., Vol. 256, No. 3, Sept., 1953.

93) Lakshmikantham, V., "Notes on a Variety of Problems of Differential Systems", MRC, Technical Summary Report No. 270, Oct., 1961.

94) Seifert, G., "Periodic Integral Surfaces For Periodic Systems Of Differential Equations", Contributions To Differential Equations, Vol. II, 1963, Pg. 34.

95) Szego, G.P., "A Contribution To Liapunov's Second Method in Nonlinear Autonomous Systems", International Symposium On Nonlinear Differential Equations and Nonlinear Mechanics, Academic Press, 1963, Edited by Lefschetz, S. and LaSalle, J.P.

96) Wyler, Oswald, "On Damped Free Oscillations", MRC. Technical Summary Report, No. 32, July 1958.

FREQUENCY RESPONSE AND DESCRIBING FUNCTION METHOD

97) Andrievskii, V.R., "The Estimation of Self-Oscillation Parameters in Automatic Control Systems", AT, Vol. 22, No. 2, 1961.

98) Bass, R.W., "Mathematical Legitmacy of Equivalent Linearization By Describing Function", Aerospace Div., Aeronca Man. Corp. Tech. Report 60-2.

99) Bass, R.W., "Equivalent Linearization in Nonlinear Circuit Synthesis and the Stabilization and Optimization of Control Systems", Proc. of the Symposium on Nonlinear Circuit Analysis, PIB, Microwave Research Inst., Vol. VI Oct., 1956.

100) Berman, G., "A Generalization of Nyquist Criterion for the Stability of active Linear Systems", Siam, Vol. 9, No. 3, Pgs. 440-454, 1961.

101) Blaquiere, A. "L'Extension de la Methods de Nyquist aux Boucles Non-Lineaires Application a L'Etude de la Stabilite des Reacteurs Nucleaires", International Symposium on Nonlinear Differential Equations and Nonlinear Mechanics, Academic Press, 1963.

102) Bonenn, Z. "Stability of Forced Oscillations in Nonlinear Feedback Systems", IRE Transaction on Auto. Control, Dec. 1958, Pgs. 109-111.

103) Chao, S.K., "Design of Contactor Servo Using Describing Function Theory", AIEE Paper No. 56-456.

104) Choksy, N.H., "A New Analytic Stability Criterion for Use With Describing Function", Fourth Joint Auto. Control Conf., Univ. of Minnesota, June 1963.

105) Gelb, A. and VanderVelde, W.E., "On Limit Cycling Control Systems", JAC, Vol. AC-8, No. 2, 1963.

106) Gibson, J.E., Hill, J.C., Ibrahim, E.S. and DiTada, E.G., "Describing Function Inversion: Theory and Computational Techniques", Purdue Univ., School of E.E., TR-EE62-10.

107) Halstenberg, R.V., "Combined Hysteresis and Nonlinear Gains in Coupled Control Systems", IRE Transactions on Auto. Control, July 1958, Pgs. 51-58.

108) Johnson, E., "Sinusoidual Techniques Applied to Nonlinear Feedback Systems", Proc. of the Symposium on Nonlinear Circuit Analysis, PIB, Microwave Research Inst., April 1953.

109) Johnson, E., "Sinusoidual Analysis of Feedback Control Systems Containing Nonlinear Elements", AIEE Transactions, Vol. 71, Pt. 2, July 1952, Pgs. 169-187.

110) Klotter, K., "How to Obtain Describing Functions for Nonlinear Feedback Systems", Trans. ASME, Vol. 79, No. 3, April 1957, Pgs. 509-512.

111) Klotter, K., "Steady State Vibrations in Systems Having Arbitrary Restoring and Arbitrary Damping Forces", Proc. on the Symposium on Nonlinear Circuit Analysis, PIB, Microwave Research Inst., April, 1953, Pgs. 234-257.

112) Kochenburger, R.J., "Limiting in Feedback Control Systems", Trans. AIEE (Appl. and Industr.), No. 7, July 1953, pgs. 180-194.

113) Kochenburger, R.J., "A Frequency Response Method for Analyzing Contactor Servomechanisms", Trans. AIEE, Vol. 69, Pt. II A, 1947, Pgs. 152-160.

114) Korshunov, Y.M., "The Analysis of Periodic States Due to Level Quantization of Signal in Automatic Digital Systems", A.T. Vol. 22, No. 7, July 1961.

115) Oldenburger, R. and Nicholls, R.E., "Stability of Subharmonic Oscillations in Nonlinear Systems", Trans. ASME, Journal of Basic Engineering, March, 1964.

116) Teverovskii, V.I., "Analysis of Self-Oscillations in Relay Systems Containing a Member in Which the Parameters Change in Steps", A.T., Vol. 22, No. 10, Oct., 1961.

117) Vavilov, A.A., "Investigation of Symetric Self-Oscillations in Relay Systems With Respect To Logarithmic Characteristics", A.T., Vol. 23, No. 8, Feb. 1963.

PIECEWISE LINEARIZATION METHOD

118) Aizerman, M.A. and Gantmakher, F.R., "A Class of Dynamical Problems Equivalent to The Theory of Relay Systems", Applied Math. Mech (USSR) Vol. 19, No. 2, 1955.

119) Aiserman, M.A. and Gantmakher, F.R., "On the Stability of Periodic Motion", Applied Math. Mech. (USSR), Vol. 22, No. 6, 1958.

120) Aizerman, M.A. and Gantmakher, F.R., "Some Aspects of the Theory of Nonlinear Automatic Control and Discontinuous Characteristics", Proc. IFAC Congress 1960.

121) Aizerman, M.A. and Gantmakher, F.R., "Derivation of Periodic Modes for a Dynamic System with a Piecewise Linear Response", Applied Mathematics & Mechanics (USSR) Vol. 20 #5, 1956.

122) Andre, J. and Siebert, P., "On Piecewise Linear Differential Equations Occuring in Control Problems", Arch. Math. Vol. 7 1956, 148-156, 157-164.

123) Belya, K.K., "On the Stability of the Periodic Motion of Piecewise Linear Automatic Control Systems", Automat. Telemekh., Vol. 21, No. 8, 1960.

124) Belya, K.K., "Determination of Dynamic Processes in Piecewise Linear Auto. Control Sys.", Translation: NASA Technical Translation NASA TTF-132.

125) Fleishman, B.A., "Forced Oscillations and Convex Superposition in Piecewise-Linear Systems", SIAM Review Vol. 7, No. 2, Pg. 205-222, April 1965.

126) Gubar, N.A., "Investigation of Piecewise-Linear Sys. with 3 Parameters" - PMM Vol. 25, No. 6, 1961. Uses point transformation - P.W.L.

127) Grayson, L.P. and Mishkin, E., "Three Dimensional Phase - Space Analysis" Polytechnic Institute of Brooklyn, Microwave Research Institute, Report No. R-741-59 PIB-669, May 1959.

128) Kalman, R.E., "Phase Plane Analysis of Automatic Control Systems with Nonlinear Gain Elements", AIEE Trans., Vol. 28, Part II 1956, 383-390.

129) Kovatch, G., "Computation of Self-Sustained Oscillations in Piecewise Linear Systems with Two Nonlinearities, JACC, Stanford Univ. June 1964.

130) Kovatch, G., "Computation of Self-Sustained Oscillations in Systems with Piecewise Linear Elements", RIAS Tech. Report March, 1963.

131) Rozenvasser, E.N., "On the Accurate Determination of Periodic Regimes in Sectionally Linear Automatic Control Systems", A.T. (USSR) Vol. 21, No. 9, 1960.

132) Rozenvasser, E.N., "On the Exact Determination of Oscillations in Piecewise Linear Continuous Systems", Auto. & Remote Control, Vol. 23, No. 11, Nov. 1962.

133) Rozenvasser, E.N., "Reducing the Equations for a Nonlinear Control System to the Simplest Form", A.T. (USSR) Vol. 21, No. 1, 1960.

BOUNDEDNESS AND LAGRANGE STABILITY

134) Yoshizawa, T., "Liapunov's Function and Boundedness of Solutions", RIAS, TR-59-7.

135) Yoshizawa, T., "Liapunov's Function and Boundedness of Solutions", Funacialnj Ekuacioj, Pgs. 95-142, 1939.

136) Rekasius, Z.U., "Lagrange Stability of Nonlinear Feedback Systems", IEEE Trans. on Auto-Cont., AC-8, No. 2 Pgs. 160-163, April 1963.

137) Szego, G.P., "A Contribution to Liapunov's Second Method: Nonlinear Autonomous Systems" International Symposium on Nonlinear Differential Equations and Nonlinear Mechanics Academic Press, Pgs. 421-430, 1963.

138) Lefschetz, S., "Stability of Nonlinear Control Systems", Academic Press, 1965.

139) Kalman, R.E. and Englar, T.S., "A User's Manual for ASP-C" , RIAS, Contract No. NAS 2-1107.

140) Kalman, R.E., "Liapunov Functions for the Problem of Lurè in Automatic Control", RIAS, Feb., 1963.

APPENDIX B

AUTOMATIC SYNTHESIS PROGRAM (ASP)

The ASP (139) digital - computer program was written by Messrs. R. Kalman and T. Englar, for the specific purpose of solving the linear optimization problem with a quadratic loss function. Though this program was written for a specific purpose, it has proven to be versatile in its capabilities. The number of subroutines which were developed in order to solve the linear optimization problem may be used for other purposes. The ability to manipulate vector-matrix algebra allows one to work in state space notation, the solution to the matrix riccati equations permits one to construct a Liapunov function and there are other uses.

The program is written in FAP, but to use it requires very little knowledge of computer languages. A dictionary of the mathematical capabilities is clearly presented in (139) along with examples and error statements. The ease in which ASP may be used is best demonstrated by an example. Specifically, in constructing a Liapunov function. Assume that the Liapunov function is of the form $V = X^T Q X$ and the matrix Q must satisfy the following relation:

$$A^T Q + QA = -P$$

where A, is a stable n x n matrix and P is a positive definite n x n matrix. Normally the matrix is defined by

$$Q = \int_0^\infty e^{A^T t} P e^{At} dt$$

However, the linear matrix riccati equation has the form:

$$-\dot{Q} = A^T Q + Q A + P$$

which is what the ASP programs is capable of solving. Observe that the steady state solution of the riccati equation will also yield the matrix Q which defines the V - function. A listing is shown of the construction of the matrix (E) which transforms system I-4 into companion form, and the solution to the steady state linear riccati equation, along with the inputs, and the output at the end of Appendix D.

APPENDIX C

CONSTRUCTION OF A LIAPUNOV FUNCTION

In order to construct the Liapunov function of interest and obtain numerical values, the Kalman-Yakubovich Lemma (138), is applied. The proof of this Lemma may be found Lefschetz (138) and will be presented verbatim because of its clarity and since it is essential in the actual construction of the Liapunov function.

Consider the system

$$\dot{x} = Ax - bF(\sigma) \qquad \text{C-1}$$
$$= c^T x$$

where A is a stable $n \times n$ matrix, c, b, are real vectors, the pair A, b completely controllable, and the nonlinearity satisfies

$$0 < \sigma F(\sigma) < K\sigma^2$$

In fact, let the system C-1 satisfy Popov's criteria. That is, there exists a γ such that:

$$1/K + \mathrm{Re}\left\{(1+i\omega\gamma)(c^T(i\omega I - A)^{-1}b)\right\} > 0$$

for all real ω .

A Liapunov function of the form

$$V = x^T Q x + \gamma \int_0^\sigma F(u)\,du$$

is desired, and has the property that its total derivative $\dot{V}$ is negative definite. By adding and subtracting $(\sigma - F/K)F$ from

$\dot{V}$, the derivative may be expressed as:

$$\dot{V} = x^T(A^TQ + QA)x - 2F(\sigma)\left[b^TQ - \left(\frac{\gamma c^TA + c^T}{2}\right)\right]x$$
$$- (1/k + \gamma c^Tb)F^2(\sigma) - (\sigma - F/k)F.$$

By defining

$$A^TQ + QA = -P \qquad \text{C-2}$$
$$r = 1/k + \gamma c^Tb$$
$$\sqrt{r}\,q^T = b^TQ - \left(\frac{\gamma c^TA + c^T}{2}\right)$$

$\dot{V}$ is expressed as

$$\dot{V} = -x^T(P - qq^T)x - (\sqrt{r}F(\sigma) + q^Tx)^2 - (\sigma - F/k)F$$

To insure that $\dot{V}$ is negative definite, $P - qq^T$ must be > 0 . If the matrix P and the vector q may be found, the construction will be completed. In the proof of the Kalman-Yakubovich Lemma the matrix P is defined, and the vector q is constructed.

Kalman-Yakubovich Lemma:

Given a stable matrix A, a positive definite symmetric matrix D, real vectors h and k, $h \neq 0$ and scalars $\tau \geq 0$, $\epsilon > 0$, then a necessary and sufficient condition for the existence of a Matrix B and a vector q which satisfies the conditions

a) $A^TB + BA = -qq^T - \epsilon D$

b) $Bh - k = \sqrt{\tau}\,q$

is that ϵ is small and the relation

$$\tau + 2\,\mathrm{Re}\left\{ k^T (i\omega I - A)^{-1} h \right\} > 0 \qquad \text{C-3}$$

is satisfied for all real w. For simplicity, let (iwI-A) = A_w and * indicates the conjugate transpose.

Proof of Necessity: Equation C-3 is represented as

$$\tau + k^T A_\omega^{-1} h + (A_\omega^{-1} h)^* k > 0$$

since $A_\omega^* B + B A_\omega = -(A^T B + BA)$ by premultiplying this by $(A_\omega^{-1} h)^*$ and post multiplying by $A_\omega^{-1} h$ yields

$$(A_\omega^{-1} h)^* Bh + h^T B (A_\omega^{-1} h) = (A_\omega^{-1} h)^* q q^T + \epsilon (A_\omega^{-1} h)^* D (A_\omega^{-1} h)$$

Substituting in for Bh from condition (b) yields the identity:

$$2\,\mathrm{Re}\left\{ k^T A_\omega^{-1} h \right\} = |q^T A_\omega^{-1} h|^2 - 2\sqrt{\tau}\,\mathrm{Re}(q^T A_\omega^{-1} h) + \epsilon (A_\omega^{-1} h)^* D (A_\omega^{-1} h)$$

Consider D a hermitian matrix, and the fact that

then $J = \epsilon (A_\omega^{-1} h)^* D (A_\omega^{-1} h) > 0$

Since $q^T A_\omega^{-1} h = \alpha + j\beta$

equation C-3 is

$$\tau + 2\,\mathrm{Re}\left\{ k^T A_\omega^{-1} h \right\} = (\alpha - \sqrt{\tau})^2 + \beta^2 + J > 0$$

which proves the necessity. In fact, this is equivalent to Popov's criteria. Prior to providing the sufficiency of the lemma, it is assumed without loss of generality that the matrix A is in companion form, the vector $h^T = [0\,0 \ldots 0\,1]$ and $k^T = [b_0\ b_1 \ldots b_{n-1}]$ when A, h are completely controllable. (See Appendix D for the transformation matrix which will transform A, h, k into their proper

forms). In order to prove the sufficiency portion Lefschetz (138) proves a short theorem.

Theorem: If u is a real vector such that $\mathrm{Re}\{u^T A_\omega^{-1} h\} = 0$ whatever w, then u = o. This was shown by contradiction, but will not be shown at the present.

Let
$$f(\omega) = (A_\omega^{-1} h)^* k + k^T (A_\omega^{-1} h)$$
$$g(\omega) = (A_\omega^{-1} h)^* D (A_\omega^{-1} h)$$

where f(w), g(w) are real rational functions of w with the numerator of degree $\leq$ n-1 and the denominator of degree n. Then f, g $\longrightarrow$ o as $\omega \longrightarrow +\infty$ and are continuous for finite w. By noting that f, and g possess upper and lower bounds, and that

$$(A_\omega^{-1} h)^* D (A_\omega^{-1} h) > 0 \quad , \quad \epsilon$$

may be selected so that

$$\tau + 2\,\mathrm{Re}\{k^T A_\omega^{-1} h\} - \epsilon (A_\omega^{-1} h)^* D (A_\omega^{-1} h) > 0$$

Let $\psi(i\omega) = |A_\omega|$, then

$$\tau + 2\,\mathrm{Re}\{k^T A_\omega^{-1} h\} - \epsilon (A_\omega^{-1} h)^* D (A_\omega^{-1} h) = \frac{N(\omega^2)}{|\psi(i\omega)|^2} \qquad \text{C-4}$$

for all real w. $N(\omega^2)$ is a real polynomial of degree 2n with a leading coefficient of τ , and has no real roots. It may be represented as

$$N(\omega^2) = \theta(i\omega)\,\theta(-i\omega) \qquad \text{C-5}$$

where $\theta(i\omega)$ is a real polynomial whose leading coefficient is $\sqrt{T}$ and is of degree n.

Then, $$V(i\omega) = \theta(i\omega) - \sqrt{T}\,\psi(i\omega) \qquad \text{C-6}$$

and $V(i\omega)$ is of degree n-1, whose coefficients are $V_1, V_2, V_3 \ldots$

The vector q is then defined as $q^T = [-V_1 \; -V_2 \; -V_3 \; \ldots \;]$

From this the matrix B may be obtained by the application of condition (a).

To complete the proof of the sufficiency condition,

$$T + 2\,\mathrm{Re}(K^T A_\omega^{-1} h) - \epsilon (A_\omega^{-1} h)^* D (A_\omega^{-1} h)$$
$$= \left(V(i\omega)/\psi(i\omega) - \sqrt{T}\right)\left(V(-i\omega)/\psi(-i\omega) - \sqrt{T}\right)$$

and

$$V(i\omega)/\psi(i\omega) = -q^T A_\omega^{-1} h$$

Then $$2\,\mathrm{Re}\left\{K^T A_\omega^{-1} h\right\} = \left\{(A_\omega^{-1} h)^* q - \sqrt{T}\right\}\left\{q^T A_\omega^{-1} h - \sqrt{T}\right\} - T$$
$$= (A_\omega^{-1} h)^* q q^T (A_\omega^{-1} h) - \sqrt{T}\left\{q^T (A_\omega^{-1} h) + (A_\omega^{-1} h)^* q\right\}$$
$$= -\left\{(A_\omega^{-1} h)^* B h + h^T B A_\omega^{-1} h\right\} - \epsilon (A_\omega^{-1} h)^* D (A_\omega^{-1} h)$$
$$- \sqrt{T}\left(q^T A_\omega^{-1} h + (A_\omega^{-1} h)^* q\right)$$

By condition (b),

$$(A_\omega^{-1} h)^* (Bh - K - \sqrt{T} q) + (Bh - K - \sqrt{T} q)^T (A_\omega^{-1} h)$$
$$= 2\,\mathrm{Re}\,(Bh - K - \sqrt{T} q)^T (A_\omega^{-1} h) = 0$$

Since $Bh - K - \sqrt{T}\,q$ is a real vector, and the application of

Lefschetz's theorem, $Bh - K - \sqrt{\tau}\, q = 0$, which completes the proof.

By properly identifying equations C-2 with those required in the lemma one can construct the vector q by determining the roots of the polynomial C-5, and then form the polynomial $V(i\omega)$, equation C-6.

APPENDIX D

GENERAL TRANSFORMATION MATRIX E

Previously it was stated in the proof of the Kalman-Yakubovich Lemma that for the given system

$$\begin{aligned} \dot{x} &= Ax + bF(\sigma) \\ \sigma &= c^T x \end{aligned} \qquad \text{D-1}$$

that A, b, have a specific representation without loss of generality when the pair A, b are completely controllable. It will be shown that a matrix E may be defined as that under the transformation X = EY, the system will be in companion form and that the transfer function is preserved.

Define the transformation E to be, Lefschetz (138).

$E = [\, e_1 \;\; e_2 \;\; e_3 \;\ldots\; e_n \,]$, where e_i are column vectors

$$\begin{aligned} e_n &= b \\ e_{n-1} &= Ab + a_{n-1} b \\ e_{n-2} &= A^2 b + a_{n-1} Ab + a_{n-2} b \\ &\vdots \\ e_{n-(n-1)} &= A^{n-1} b + a_{n-1} A^{n-2} b + a_{n-2} A^{n-3} b + \cdots + a_{n-(n-1)} b \end{aligned}$$

or simply:

$$\begin{aligned} e_n &= b \\ e_{n-1} &= Ae_n + a_{n-1} e_n \\ e_{n-2} &= A(e_{n-1}) + a_{n-2} e_n \\ &\vdots \\ e_{n-j} &= A(e_{n-(j-1)}) + a_{n-j} e_n \end{aligned}$$

where $j = 1, 2, \ldots n-1$ and the scalars a_j are the coefficients of $|Is - A| = P_n(s)$

$$P_n(s) = a_0 + a_1 s + a_2 s^2 + \cdots + a_{n-1} s^{n-1} + s^n$$

The transformed system, for X = EY

$$\begin{aligned} \dot{Y} &= FY + KF(\sigma) \\ \sigma &= d^T Y \end{aligned} \qquad \left\{ \begin{aligned} F &= E^{-1}AE \\ K &= E^{-1}b \\ d^T &= c^T E \end{aligned} \right. \qquad \text{D-2}$$

and the transfer function of system D-1 is preserved,

$$c^T(Is - A)^{-1}b = d^T(Is - F)^{-1}K$$

Since
$$\begin{aligned} d^T(Is - F)^{-1}K &= c^T E\,(Is - E^{-1}AE)^{-1}(E^{-1}b) \\ &= c^T E\left(E^{-1}EIs - E^{-1}AE\right)^{-1}(E^{-1}b) \\ &= c^T E\left(E^{-1}(Is - A)E\right)^{-1}(E^{-1}b) \\ &= c^T E(E^{-1})(Is - A)^{-1}E\,(E^{-1}b) \\ &= c^T(Is - A)^{-1}b \end{aligned}$$

In order to show that system D-2 is of the companion form,

$$F = \begin{bmatrix} 0 & 1 & 0 & \cdots & & 0 \\ 0 & 0 & 1 & 0 & \cdots & 0 \\ 0 & \vdots & & \ddots & & \vdots \\ \vdots & \vdots & & & \ddots & \vdots \\ \vdots & \vdots & & & & 0 \\ 0 & 0 & & & & 1 \\ -a_0 & -a_1 & \cdots & & & -a_{n-1} \end{bmatrix}$$

Since $E = [e_1 \; e_2 \; .. \; e_n]$

$$AE = [Ae_1 \;\; Ae_2 \;\; Ae_3 \; \ldots \; Ae_n]$$

$$Ae_1 = A^n e_n + a_{n-1} A^{n-1} e_n + \cdots + A a_1 e_n$$

$$a_0 e_n + Ae_1 = \left(A^n + a_{n-1} A^{n-1} + a_{n-2} A^{n-2} + \ldots + A a_1 + a_0 \right) e_n$$

$$\therefore \quad Ae_1 = -a_0 e_n$$

$$Ae_2 = e_1 - a_1 e_n$$

$$\vdots$$

$$A e_n = e_{n-1} - a_{n-1} e_n$$

Let $E^{-1} = \begin{bmatrix} r_1 \\ r_2 \\ \vdots \\ r_n \end{bmatrix}$, where r_i are row vectors

Since $E^{-1} E = I$, $r_i e_j = \delta_{ij} = \begin{cases} 1 & j = i \\ 0 & j \neq i \end{cases}$

It follows that $E^{-1} A E = \begin{bmatrix} r_1 \\ r_2 \\ r_3 \\ \vdots \\ r_n \end{bmatrix} [-a_0 e_n \;\; e_1 - a_1 e_n \;\; \ldots \;\; e_{n-1} - a_{n-1} e_n]$

and

$$F = \begin{bmatrix} 0 & 1 & 0 & \cdots & 0 \\ 0 & 0 & 1 & & \vdots \\ \vdots & \vdots & 0 & \ddots & \vdots \\ \vdots & \vdots & \vdots & \ddots & 0 \\ 0 & 0 & 0 & & 1 \\ -a_0 & -a_1 & -a_2 & \cdots & -a_{n-1} \end{bmatrix}$$

Similiarly, the vector k may be shown under the transformation to have the specified form of $K^T = [0\ 0\ 0\ \cdots\ 0\ 1]$.

```
*     REM     SOLUTION OF              RICCATI EQ.
      MARCH  25.1966
      BEGIN
      LOAD    A. H. Q. B.A1.A2.A3. D.PC. C.PO. R. S. L.S1.
      MULT    A. B.    I1.
      MULT   A3. B.    I2.
      ADD    I1.I2.    E3.
      MULT    A.E3.    I3.
      MULT   A2. B.    I4.
      ADD    I3.I4.    E2.
      MULT    A.E2.    I5.
      MULT   A1. B.    I6.
      ADD    I5.I6.    E1.
      JUXTC E1.E2.      F.
      JUXTC  F.E3.      G.
      JUXTC  G. B.      E.
      RINT    E.E
      INVRS   E.    EI.
      TRANP EI.    ET.
      TRANP   A.    AT.
      TRANP   Q.    QT.
      MULT    Q.QT.    QQ.
      MULT   ET. Q.    EQ.
      MULT   S1.EQ.    RQ.
      TRANP RQ.    TQ.
      RINT   TQ.TQ.
      MULT   S1.S1.    SR.
      MULT   ET. H.    H1.
      MULT   H1.E1.    H2.
      RINT   H2.H2.
      MULT   ET.QQ.    Q1.
      MULT   Q1.E1.    Q2.
      RINT   Q2.Q2.
      ADD    H2.Q2.    HI.
      RINT   HI.HI
      JUXTR HI.TQ.    M1.
      JUXTR RQ.SR.    M2.
      JUXTC M1.M2.    MP.
      RINT   MP.MP.
      MULT    S. A.    -A.
      JUXTR -A.HI.    Z1.
      JUXTR  L.AT.    Z2.
      JUXTC Z1.Z2.      Z.
      RINT    Z.Z
      ETPHI   Z. R.PH.    PRINT
      RICAT PO.PH. C. D.PC.    P. K.AL.
      RINT    P.P
      END
```

Figure D-1

THE FOLLOWING DATA HAS BEEN STORED IN THE INDICATED MATRIX STORAGE.

MATRIX A

4 4

-0.31119999E-01	0.09999999E 01	0.	0.	-0.23243999E 01	0.
-0.67449999E 01	-0.94579998E 01	-0.53299999E-04	0.	0.	0.09999999E 01
0.12164899E-02	0.	-0.91700000E 00	-0.12849999E 01		

MATRIX B

4 4

0.23253400E-02	0.	0.	0.	0.	0.23253400E-02
0.	0.	0.	0.	0.23253400E-02	0.
0.	0.	0.	0.23253400E-02		

MATRIX C

4 1

0.58654319E 00	0.43861420E-00	0.60119420E 00	-0.15617760E-00

MATRIX B

4 1

-0.31119999E 01	0.50411139E-01	-0.53299999E-02	0.68490499E-02

MATRIX A1

1 1

0.30249999E 01

MATRIX A2

1 1

0.32810000E 01

FIGURE D-2

```
MATRIX  A3
                1     1
   0.13161000E 01

MATRIX   C
                3     1
   0.09999999E-05     0.09999999E 01     0.50000000E 03

MATRIX  PC
                4     1
   0.                 0.50000000E 02     0.09999999E 01     0.

MATRIX   C
                1     4
   0.09999999E 01     0.09999999E 01     0.09999999E 01     0.09999999E 01

MATRIX  PC
                4     4
   0.                 0.                 0.                 0.                 0.                 0.
   0.                 0.                 0.                 0.                 0.                 0.
   0.                 0.                 0.                 0.

MATRIX   R
                1     1
   0.09999999E 01

MATRIX   S
                1     1
   -0.09999999E 01
```

FIGURE D-3

MATRIX L

4 4

0.	0.	0.	0.	0.	0.
0.	0.	0.	0.	0.	0.
0.	0.	0.	0.		

MATRIX S1

1 1

0.23332381E 01

FIGURE D-4

MATRIX E

NUMBER OF ROWS 4 NUMBER OF COLUMNS 4

0.46405792E-02	-0.28165450E 01	-0.39484466E 01	-0.31119999E 01
0.66558510E 01	0.93307896E 01	0.72710512E 01	0.50411139E-01
0.57173893E-05	-0.15968602E-01	0.10669464E-06	-0.53299999E-02
0.11356836E-01	0.15978845E-01	0.13086745E-02	0.68490499E-02

MATRIX TC.

NUMBER OF ROWS 1 NUMBER OF COLUMNS 4

0.28877266E-01	0.26895850E-00	0.50926706E 02	-0.19897635E 01

FIGURE D-5

MATRIX F2.

NUMBER OF ROWS 4 NUMBER OF COLUMNS 4

0.16940223E-03	0.53517210E-04	-0.31523452E-01	-0.22261228E-01
0.53517210E-04	0.58211535E-04	-0.14022037E-01	-0.32119778E-01
-0.31523451E-01	-0.14022037E-01	0.32869352E 02	0.24491888E 02
-0.22261227E-01	-0.32119778E-01	0.24491888E 02	0.35541441E 02

MATRIX G2.

NUMBER OF ROWS 4 NUMBER OF COLUMNS 4

0.15317726E-03	0.11084038E-02	0.27013659E-00	-0.10554583E-01
0.11084038E-02	0.80205102E-02	0.19547334E 01	-0.76373622E-01
0.27013662E-00	0.19547334E 01	0.47640146E 03	-0.18613548E 02
-0.10554551E-01	-0.76373644E-01	-0.18613540E 02	0.72725093E 00

FIGURE D-6

MATRIX M1

NUMBER OF ROWS 4 NUMBER OF COLUMNS 4

0.32257550E-03	0.11619210E-02	0.23861314E-00	-0.32815811E-01
0.11619210E-02	0.80787217E-02	0.19407113E 01	-0.10849340E-00
0.23861317E-00	0.19407113E 01	0.50927081E 03	0.58783399E 01
-0.32815778E-01	-0.10849342E-00	0.58783473E 01	0.36268692E 02

MATRIX MP.

NUMBER OF ROWS 5 NUMBER OF COLUMNS 5

0.32257550E-03	0.11619210E-02	0.23861314E-00	-0.32815811E-01	0.28877266E-01
0.11619210E-02	0.80787217E-02	0.19407113E 01	-0.10849340E-00	0.20895850E-00
0.23861317E-00	0.19407113E 01	0.50927081E 03	0.58783399E 01	0.50926706E 02
-0.32815778E-01	-0.10849342E-00	0.58783473E 01	0.36268692E 02	-0.19897635E 01
0.28877266E-01	0.20895850E-00	0.50926706E 02	+0.19897635E 01	0.54439998E 01

FIGURE D-7

MATRIX Z

NUMBER OF ROWS 8 NUMBER OF COLUMNS 8

0.31119999E-01 0.	-0.09999999E 01 0.	-0.	-0.	0.	0.
0.23243999E 01 0.	-0. 0.	0.67449999E 01	0.94579998E 01	0.	0.
0.53259999E-04 0.	-0. 0.	-0.	-0.09999999E 01	0.	0.
-0.12184899E-02 0.	-0. 0.	0.91700000E 00	0.12849999E 01	0.	0.
0.32257550E-03 -0.53259999E-04	0.11619210E-02 0.12184899E-02	0.23861314E-00	-0.32815811E-01	-0.31119999E-01	-0.23243999E 01
0.11619210E-02 0.	0.80787217E-02 0.	0.19407113E 01	-0.10849340E-00	0.09999999E 01	0.
0.23861317E-00 0.	0.19407113E 01 -0.91700000E 00	0.50927081E 03	0.58783399E 01	0.	-0.67449999E 01
-0.32815778E-01 0.09999999E 01	-0.10849342E-00 -0.12849999E 01	0.58783473E 01	0.36268692E 02	0.	-0.94579998E 01

FIGURE D-8

```
MATRIX     P( 198)

TAU =  0.1000E 01     EPSILON =  0.1000E-05

NUMBER OF ROWS  4     NUMBER OF COLUMNS  4

EXPONENT   2

 0.0032 -0.0000 -0.0172  0.0025
-0.0000  0.0014  0.0017 -0.0076
-0.0172  0.0017  5.6116  2.7644
 0.0025 -0.0076  2.7644  2.3486

                    ALPHA =  0.83455738E-06
```

FIGURE D-9

MATRIX K(198)

NUMBER OF ROWS 1 NUMBER OF COLUMNS 4

EXPONENT 2

-0.0115 -0.0046 8.3605 5.1079

MATRIX P

NUMBER OF ROWS 4 NUMBER OF COLUMNS 4

0.31831888E-00	-0.40236983E-02	-0.17164420E 01	0.25483663E-00
-0.40236983E-02	0.13710596E-00	0.16877897E-00	-0.76376509E 00
-0.17164420E 01	0.16877897E-00	0.56116021E 03	0.27643939E 03
0.25483663E-00	-0.76376509E 00	0.27643939E 03	0.23486094E 03

FIGURE D-10

APPENDIX E

APPLICATION OF QO002 PROGRAM

The QO002 digital program was written by Martin-Orlando personnel and used in this investigation because of its versatility. This program has the capability of manipulating polynomials to form a transfer function, extract the roots of both the numerator and denominator polynomials, obtain a frequency response in various manners and more. Since the manipulation, root extraction and frequency response subroutines were of primary interest, the programming of these features will be discussed briefly.

To explain the use of this program, in a limited fashion, it is best to illustrate by an example. However, prior to this, two basic limitations must be considered.

1) The input polynomials must be of degree not greater than 20.

2) The degree of the computed transfer function must not exceed 50.

Application:

Assume that the following polynomials will be manipulated to form a single transfer function:

$$P_1 = s^2 + 2s + 1$$

$$P_2 = s^3 + 3s^2 + 2s + 5$$

$$P_3 = s + 1$$

$$P_4 = s^2 + 7$$

The desired transfer function has the form

$$G(s) = \frac{(P_1)(P_3) + (P_2)}{(P_2)(P_3) + (P_4)}$$

and a frequency response, along with the roots of both the numerator and denominator are also desired. The frequency response may be obtained in any or all of three options. The first option is a frequency response which is determined by the phase shift. The successive points are controlled between specified tolerances on the phase. The second option varies the frequency in discrete steps over the range of interest, and finally, the response a specific points.

Figure E-1 is a sample input sheet for the four polynomials previously defined. The first card contains a zero (0) or a one in Column 4, this defines whether or not a plot tape will be prepared. If a one is present, the tape will be prepared. The title card must contain the "T" in Column 1 and the alphanumeric data in Columns 13-72. The comment card must contain a "C" in Column 1. In Column two, fix point numbers from one to seven indicate the total number of comment cards. The first comment card contains alphanumeric data in Columns 13-72, other succeeding cards contain alpha numeric data in columns 1-72. Both the title card and comment card are optional. The "M3" run control card defines the number of sets of polynomials, and the number of polynomials in each set. This run control card simply enters the input polynomials. Columns 1 and 2 contains "M3", columns 4, 5 define the number of sets of polynomials, right adjusted,

and in columns 6 to 8, the number of polynomials per set, also right adjusted. The polynomials are then entered in succeeding cards. Columns 1 and 2 defined the number of coefficients in the polynomial, right adjusted and the coefficients are entered in ascending order in a 10-column field, starting in column 3. A maximum of two cards for each polynomial is allowed. If a decimal point is not present, a power of 10 must be present, and a decimal point will be assumed between the 5th and 6th column ahead of the sign of the exponent. Again a zero or one card must appear after the polynomials are entered. The "M4" control card defines what the program is going to do. As in M3, M4 must appear in columns 1 and 2, and in columns 4 and 5, right adjusted, identifies which set of polynomials. An "A" appearing in column 11 indicates that an "Algebra" card will be entered. A "D" in Column 12 indicates that all previous instructions shall be disregarded. The "RTS", left adjusted, in columns 13-18 indicate both the numerator and denominator roots will be extracted. An "RTSD" in the same columns will indicate that the denominator roots are to be extracted only. In columns 25-30, left adjusted, defined the various combinations in which the frequency response will be obtained.

When "A" appears in column 11 of the M4 control card, an algebra card is required and the manipulation of the polynomials to form the transfer function is defined. The algebra card contains the word algebra in columns 1-7, and in columns 13-15, right adjusted, defines the number of control characters. Previously the algebra

was defined to form the transfer function. The control characters indicate the desired manipulation. A sequence of consecutive positive integers indicates that the polynomial represented by that integer are to be multiplied together. Each sequence must be preceded by a zero (0) or one (1) which indicates the product is to be multiplied by a + or - respectively. A -2 indicates the end of a numerator, and a -3 indicates the end of the denominator. Any number of control character cards may be used.

In columns 25-30 of the M4 control card any one of the following may appear:

FREQ1, FREQ2, FREQ3, FREQ4, FREQ5, FREQ6, FREQ7, which define the various combinations of obtaining a frequency response. FREQ1 to FREQ3 indicate only one of the three options. FREQ4 indicates FREQ1 and FREQ2. FREQ5 gives FREQ1 and FREQ3; FREQ6 gives FREQ2 and FREQ3; FREQ7 gives all three options. The FREQ1 data card has FREQ1 entered in columns 1-5, columns 13-22 indicate the lower frequency limit and columns 23-32 the upper limit. The lower phase tolerance is indicated in 33-42 and the upper phase tolerance is 43-52. The FREQ2 data card is the same as FREQ1 except for the designation in columns 1-5 and that the frequency increment is entered in columns 33-42. Since FREQ3 evaluates the transfer function at specific points, the total number of points is indicated in columns 13-15, right adjusted, and the specified points indicated on a second card.

The discrete frequencies are entered as decimal numbers in successive 10 column field starting in column 3 to 72. As many cards may be used.

A listing of this program may be obtained through the Martin Orlando Computer Section.

MARTIN FORTRAN PROGRAMMING FORM

E-661 (11/63)

TITLE _____ ANALYST _____

JOB NO. _____ DATE _____ SHEET _____ OF _____

```
    0
T                   TITLE
C1                  COMMENT CARD
M3    1   4
  3  1.0            2.0            1.0
  4  5.0            2.0            3.0        1.0
  2  1.0            1.0
  3  7.0            0.0            1.0
    0
M4    1       ADRTS              FREQT
ALGEBRA             12
    0     1     3     0     2    -2     0     2     3     0     4    -3
FREQ1                .001          100.        2.0              4.0
FREQ2                1.0           10.         0.5
FREQ3                6.0
    0.3              0.6           0.8         1.0              10.        20.
    0
```

FIGURE E-1

APPENDIX F

COMPUTATION OF THE TRANSITION MATRIX

During the investigation which utilized the piecewise linearization technique, the closed form representation of the transition matrix e^{At} was required. The derivation of this closed form solution was based on the following theorem.

Theorem: If F(λ) is an analytic function and if the n x n matrix A has distinct eigenvalues $\lambda_1, \lambda_2, \lambda_3 \ldots\ldots \lambda_n$ then

$$F(A) = \sum_{k=1}^{n} F(\lambda_k) \prod_{\substack{i=1 \\ i \neq k}}^{n} \frac{(A - \lambda_i I)}{(\lambda_k - \lambda_i)}$$

Proof: From the Cayley - Hamilton Theorem F(A) can be written in the form

$$F(A) = \sum_{l=1}^{n} a_l \prod_{\substack{i=1 \\ i \neq l}}^{n} (A - \lambda_i I)$$

The problem is to determine the unknown coefficients a_l .

Substituting $\lambda_k I$ for A gives

$$F(\lambda_k I) = \sum_{l=1}^{n} a_l \prod_{\substack{i=1 \\ i \neq l}}^{n} (\lambda_k I - \lambda_i I)$$

which reduces to

$$F(\lambda_k) = \sum_{l=1}^{n} a_l \prod_{\substack{i=1 \\ i \neq l}}^{n} (\lambda_k - \lambda_i)$$

Since $\prod_{\substack{i=1 \\ i \neq \ell}}^{n} (\lambda_k - \lambda_i) = 0$ for $k \neq \ell$

then

$$F(\lambda_k) = a_k \prod_{\substack{i=1 \\ i \neq k}}^{n} (\lambda_k - \lambda_i)$$

Therefore

$$a_k = \frac{F(\lambda_k)}{\prod_{\substack{i=1 \\ i \neq k}}^{n} (\lambda_k - \lambda_i)}$$

and it follows

$$F(A) = \sum_{k=1}^{n} F(\lambda_k) \prod_{\substack{i=1 \\ i \neq k}}^{n} \frac{(A - \lambda_i I)}{(\lambda_k - \lambda_i)}$$

Since the transition matrix considered in this problem does fulfill these requirements

$$e^{At} = \sum_{k=1}^{n} e^{\lambda_k t} \prod_{\substack{i=1 \\ i \neq k}}^{n} \frac{(A - \lambda_i I)}{(\lambda_k - \lambda_i)}$$

In fact, it was observed that for eigenbalues which are all complex, this representation may be simplified further by separating the real and complex portions. Then,

$$e^{At} = \sum_{i=1}^{n/2} e^{\alpha_i t} (P_i \cos \beta_i t + Q_i \sin \beta_i t)$$

where Pi and Qi are real matrices, and $\alpha_i \pm j\beta_i$, $i = 1, 2, \ldots n/2$ are the eigenvalues. A 1620 computer program was written to compute the matrices Pi and Qi when A is a 4 x 4 matrix with distinct, complex eigenvalues. A listing of the program is given in the figure below.

```
      DIMENSION A(4,4),B(4,4),C(4,4),D(4,4),E(4,4),F(4,4),G(4,4),P(4,4)
20    READ 1,((A(I,J),J=1,4),I=1,4)
      READ 2,((B(I,J),J=1,4),I=1,4)
1     FORMAT(4E18.8)
2     FORMAT(4E18.8)
      READ 3,X1,Y1
      READ 4,X2,Y2
3     FORMAT(2E18.8)
4     FORMAT(2E18.8)
      S1=Y1*((X1-X2)**2+(Y1-Y2)**2)*((X1-X2)**2+(Y1+Y2)**2)
      S2=(X1-X2)**2-(Y1)**2+(Y2)**2
      S3=2.*(X1-X2)*Y1
      DO 5 I=1,4
      DO 5 J=1,4
      C(I,J)=A(I,J)
5     P(I,J)=B(I,J)-2.*X2*A(I,J)
      DO 6 K=1,4
      C(K,K)=C(K,K)-X1
6     P(K,K)=P(K,K)+((X2)**2+(Y2)**2)
      DO 7 I=1,4
      DO 7 J=1,4
      D(I,J)=-S3*C(I,J)
7     E(I,J)=S2*C(I,J)
      DO 8 K=1,4
      D(K,K)=S2*Y1+D(K,K)
8     E(K,K)=E(K,K)+S3*Y1
      DO 9 I=1,4
      DO 9 J=1,4
      SD=0.
      SE=0.
      DO 10 K=1,4
      SD=SD+P(I,K)*D(K,J)
10    SE=SE+P(I,K)*E(K,J)
      F(I,J)=SD/S1
9     G(I,J)=SE/S1
      PUNCH 11,((F(I,J),J=1,4),I=1,4)
      PUNCH 12,((G(I,J),J=1,4),I=1,4)
11    FORMAT(4E18.8)
12    FORMAT(4E18.8)
      GO TO 20
      END
```