TRW Report No. E-7061.2-252

FIFTH QUARTERLY PROGRESS REPORT
CONTRACT NAS 5-9178

STUDY AND ANALYSIS OF SATELLITE POWER SYSTEMS CONFIGURATIONS FOR MAXIMUM UTILIZATION OF POWER

Period covered:
18 May 1966 through 18 July 1966

Prepared for

National Aeronautics and Space Administration
Goddard Space Flight Center
Greenbelt, Maryland

J. G. Leisenring

J. G. Leisenring, Project Manager

Approved: H. Riess

H. Riess, Head
Power Systems Section

Approved: A. D. Schoenfeld

A. D. Schoenfeld, Manager
Power Systems and
Conditioning Department

TRW SYSTEMS

CONTENTS

		Page
1.	INTRODUCTION	1
2.	PRESENT STATUS OF THE STUDY	2
3.	FIFTH QUARTER STUDY RESULTS	3
3.1	General	3
3.2	Performance Requirements	7
3.2.1	Primary Performance Requirements	7
3.2.2	Secondary Performance Requirements	8
3.3	Model Converter Specification	10
3.3.1	Primary Requirements	10
3.3.2	Secondary Requirements	10
3.4	Converter Circuits	11
3.4.1	Regulated Square Wave Inverter (RSWI)	11
3.4.2	Pulse Width Inverter (PWI)	11
3.4.3	Energy Storage Converter (ES)	12
3.5	Parametric Data Calculations	13
3.5.1	Input Filter Design	13
3.5.2	Integrating Filter Design	17
3.5.3	Energy Storage Filter Design	19
3.5.4	Transformer Rectifier	21
3.5.5	Semiconductor Circuit Design	22
3.5.6	Error Amplifier Circuit	26
3.5.7	Structural Weight	27
3.6	Analysis of Parametric Data and Conclusions	36
3.6.1	Efficiency	36
3.6.2	Weight	36
APPENDIX A	ELECTRONIC EQUIPMENT THERMAL PACKAGING OPTIMIZATION	43

ILLUSTRATIONS

		Page
3-1	Block Diagram, RSWI Converter	4
3-2	Block Diagram, PWI Converter	5
3-3	Block Diagram, ES Converter	6
3-4	Input Filter Losses for All Three Converter Circuits	15
3-5	Integrating Filter Losses for RSWI and PWI Converter Circuits	18
3-6	ES Converter, Integrating Filter Losses	20
3-7	Ratio of Equipment Weight to Components Weight	28
3-8	Equipment Power Dissipation Versus Weight	29
3-9	RSWI Converter Weight	31
3-10	PWI Converter Weight	32
3-11	ES Converter Weight	33
3-12	Structure - Thermal Optimization, K = 1	34
3-13	Structure - Thermal Optimization, K = 5	35
3-14	RSWI Converter, Efficiency Versus Power Output	37
3-15	PWI Converter, Efficiency Versus Power Output	38
3-16	ES Converter, Efficiency Versus Power Output	39
3-17	Block Diagram—ES Push-Pull Converter	41
3-18	ES Push-Pull Converter Weight	42

TABLES

		Page
3-1	Minimum Weight Converter Selection	40
3-2	Revised Minimum Weight Converter Selection	40

1. INTRODUCTION

This is the Fifth Quarterly Progress Report covering work performed by TRW Systems under Contract NAS 5-9718, "Study and Analysis of Satellite Power Systems Configurations for Maximum Utilization of Power." This report covers the 2-month contract extension period, 18 May 1966 through 18 July 1966. The study program consists of the following tasks:

Task I	A survey of the power requirements of spaceborne equipment in typical unmanned earth satellites
Task II	A survey of typical spacecraft electrical power system designs
Task III	Collection and presentation of parametric data on the individual assemblies constituting a power system (i.e., power control, energy storage, and power-conditioning equipment)
Task IV	Analysis of three typical space missions, selected by GSFC, with respect to their electrical power requirements and to the characteristics of photovoltaic power systems which could meet those requirements. Various power system configurations will be evaluated with respect to efficiency, weight, reliability, and interface constraints
Task V	Investigation of possible means of standardizing electrical power requirements for satellites as well as design of power systems and their equipments
Task VI	Investigation of the characteristics of alternate electrical power systems using radioisotope thermoelectric generators (RTG) rather than photovoltaic sources
Task VII	Review of new techniques, circuit designs, and components which could allow improvement in power conditioning equipment efficiency, weight, and/or reliability. Provide updating of parametric data to reflect the latest state of the art in power system equipment designs.

The results of the first four tasks were used to establish an evaluation technique or method which would allow various proposed power system designs to be evaluated for optimization. Application of this technique was demonstrated on the designs for the three missions specified by Goddard Space Flight Center. The identification of power systems optimized for maximum utilization of power permitted recommendations for standardization of satellite power systems, requirements, and equipments. Primary consideration was given to the design of system configurations which would result in the maximum utilization of available power.

2. PRESENT STATUS OF THE STUDY

At the conclusion of the contract technical effort, the planned program and 2-month extension were completed. The remaining effort under the contract was to prepare the Fifth Quarterly and Final Technical Reports.

The technical effort during the last 2-month contract extension provided for the updating of parametric data related to electrical power conditioning equipment (Task VII of Section 1). Results of the improved state of the art designs are reported as functions of the various design parameters.

The Final Technical Report is 95 percent complete. A proof copy will be submitted to the technical representative at NASA/GSFC for approval prior to distribution.

3. FIFTH QUARTER STUDY RESULTS

3.1 GENERAL

All power conditioning parametric data reported to date has been for fully developed equipment designs. During the past year new methods and design techniques have been investigated by TRW Systems Independent Research Program for improvement in performance, weight, efficiency, and/or reliability. Some of these investigations were pursued further in the laboratory to obtain circuit test data. Incorporation of these new techniques in satellite hardware designs is now in process.

This contract reporting period has been devoted to analyzing these techniques to determine the extent of their application. Analysis of the circuit elements to determine the proper components for each circuit type as a function of the output power and operating frequency has permitted a more refined selection of circuit designs to improve efficiency, weight, and reliability. Selected circuit designs were parametrically analyzed to determine their optimum operating limits and tradeoff factors.

The dc-to-dc converter was chosen as the investigation model because it is representative of all power conditioning functions found in an electrical power system. A common converter requirement specification was selected to meet typical conversion requirements. Three basic circuits were analyzed: (1) regulated squarewave converter (RSWI) Figure 3-1; (2) pulsewidth converter (PWI) Figure 3-2; and (3) energy storage converter (ES) Figure 3-3. Data related to each circuit design was derived for weight and efficiency as functions of output power and switching frequency.

The final converter parametric data is the result of synthesizing the applicable groups of data derived for each major section of the converter circuit. Circuit efficiency and weights were reduced to frequency dependent and independent components for convenient identification of frequency limitations resulting from circuit design and component selection. Baseline designs were established for each section of the circuit for a selected number of applicable power outputs. Expansion of the design data about each baseline design established crossover points. Data synthesis for the

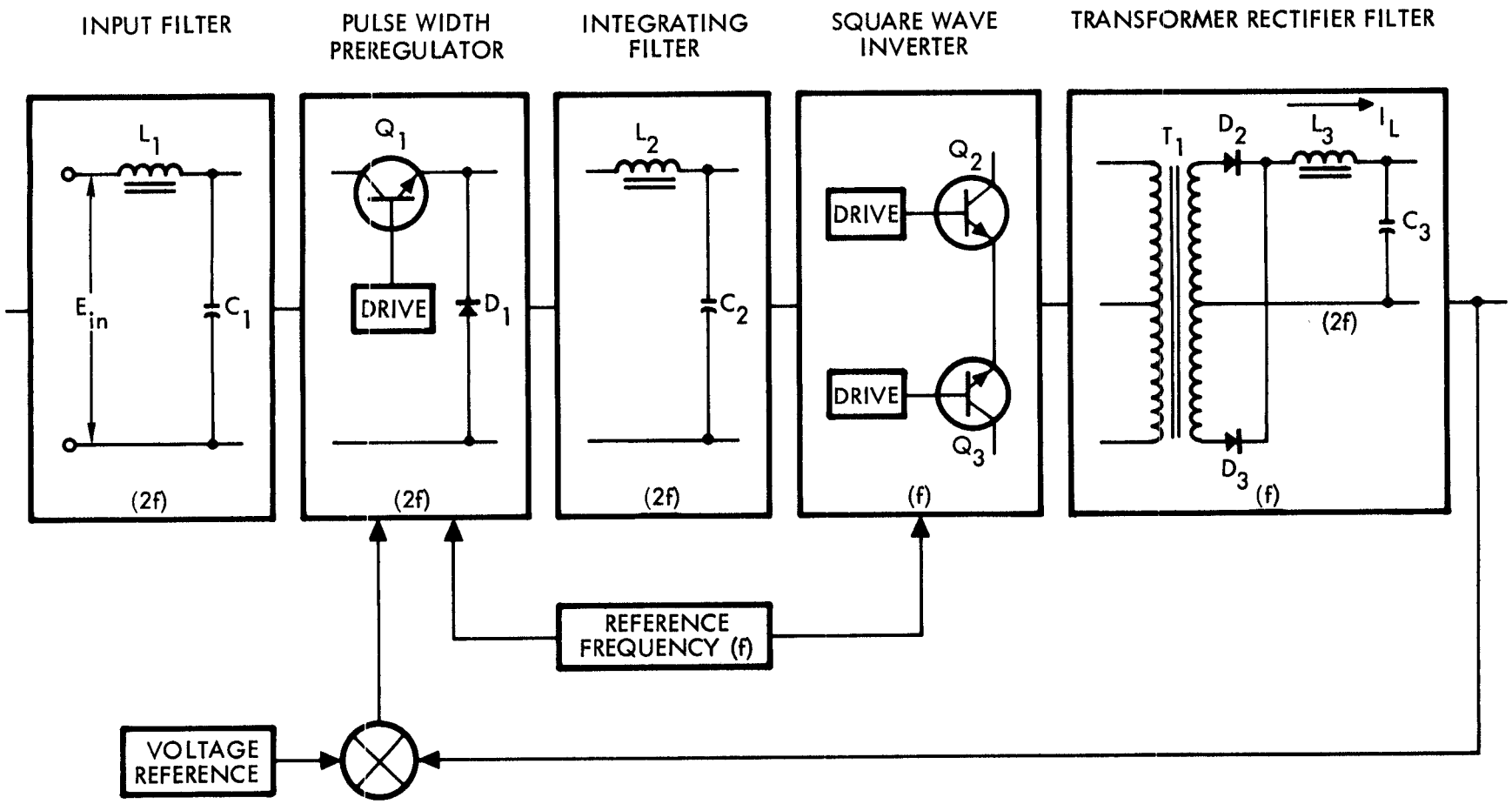

Figure 3-1. Block Diagram, RSWI Converter

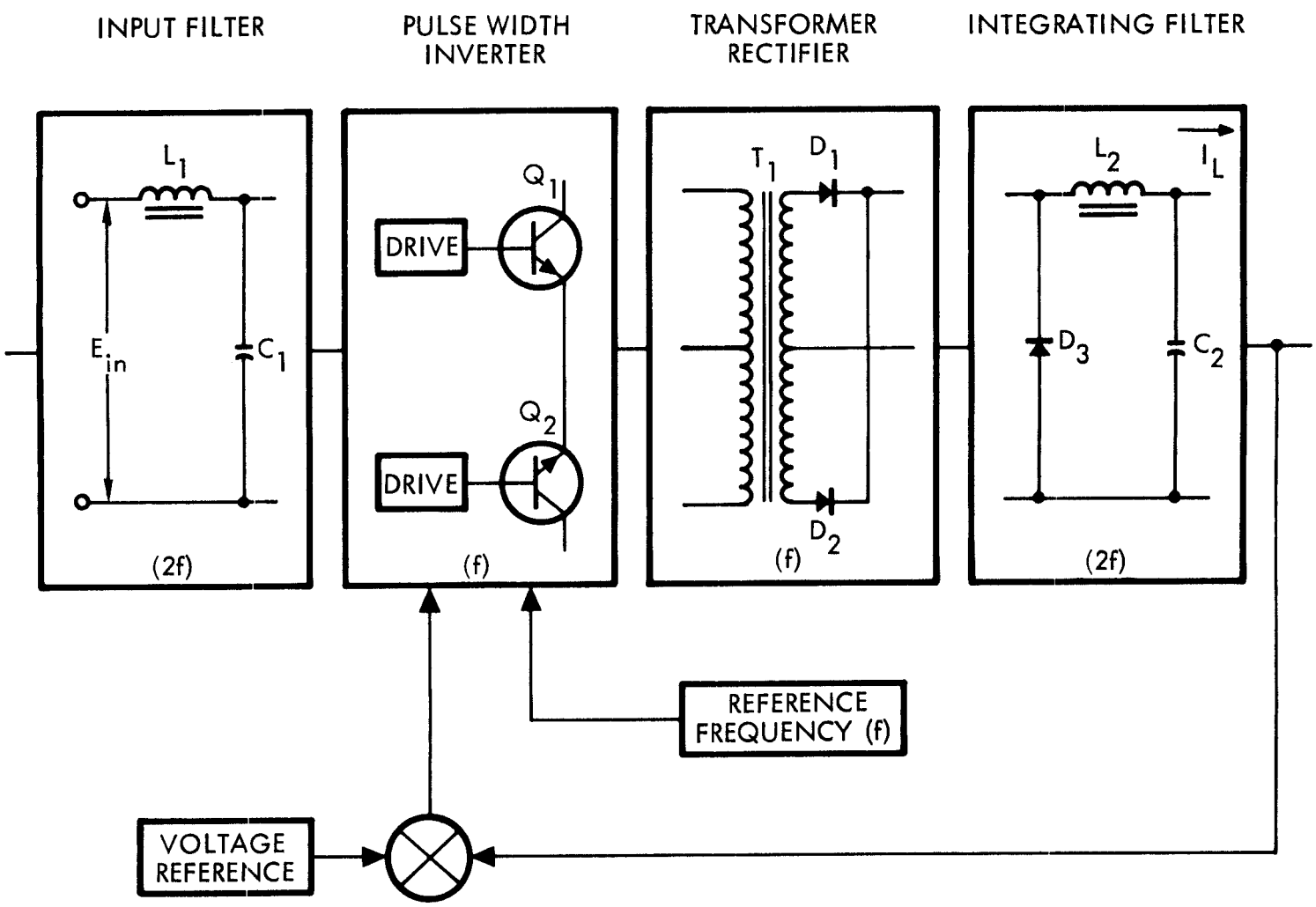

Figure 3-2. Block Diagram, PWI Converter

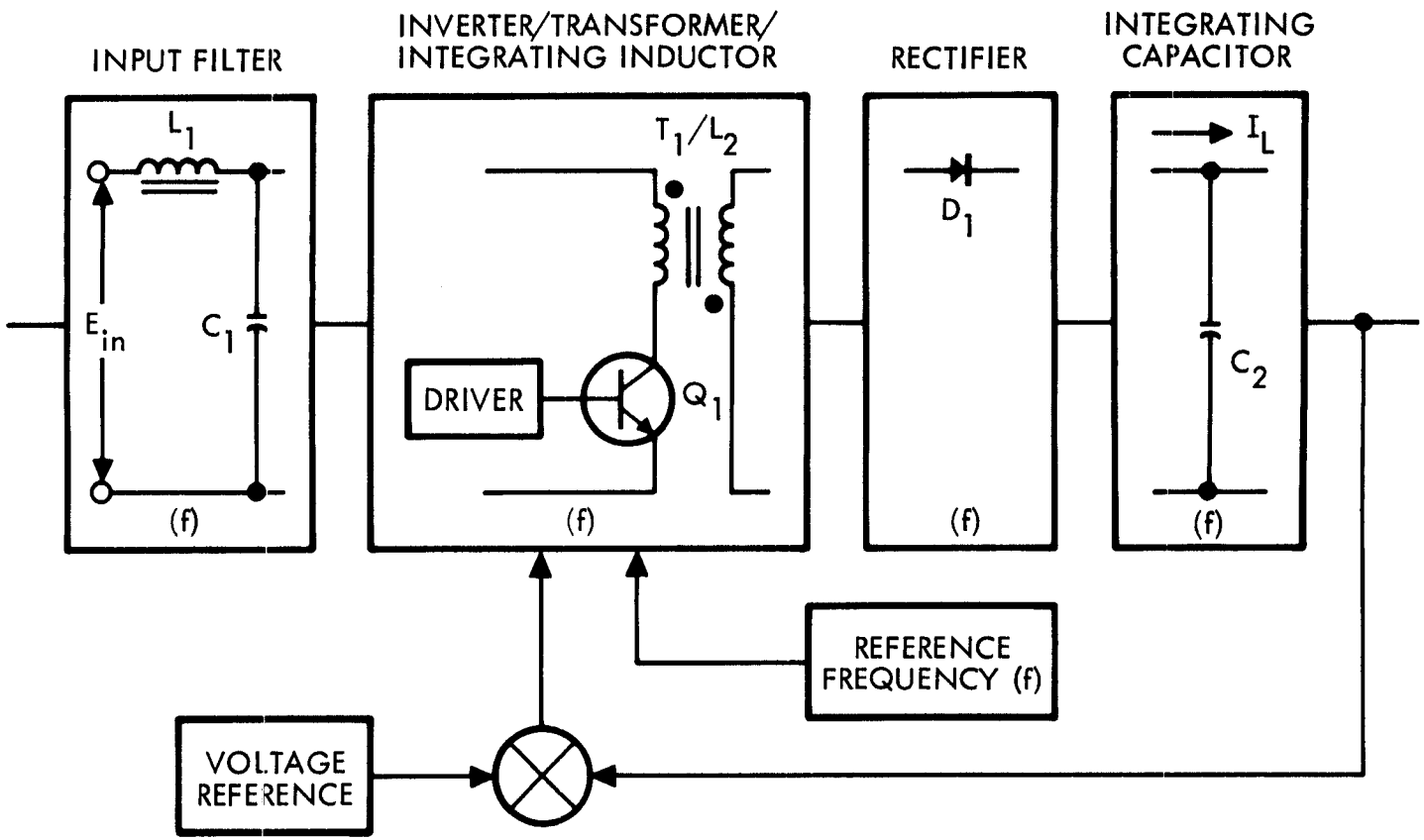

Figure 3-3. Block Diagram, ES Converter

complete circuit resulted from selecting the more optimum values between the crossover points for each circuit section. This approach to data synthesis provided a more detailed derivation than previously reported for the power conditioning equipment, which was based upon a statistical summary of actual equipment designed for current spacecraft.

3.2 PERFORMANCE REQUIREMENTS

Performance requirements may be divided into primary and secondary categories. Primary requirements are those general requirements developed by all applications, and which usually determine the weight and efficiency of all converters. Secondary performance requirements are generated by specific applications which affect only the converters so applied. It should be emphasized that secondary characteristics are of major importance to associated equipment, and may indirectly exert dominating influence on converter weight and efficiency.

3.2.1 Primary Performance Requirements

Primary performance requirements affecting converter weight and efficiency are listed below in typical order of importance. Major effects are indicated qualitatively.

- Output Power

  Weight is approximately proportional to output power, with the major exception of the structure weight increase at low output power. Efficiency is proportional to power and the fixed losses, determined by component operating point limitations, are an appreciable fraction of the output power for low wattage units.

- Input Voltage Range

  Input filter weight is a function of input voltage range. Efficiency is inversely proportional to input voltage range to an extent determined by RMS current.

- Output Voltage

  Weight increases when output voltage is increased to levels requiring special dielectric considerations. Efficiency decreases as output voltage is decreased and diode losses and transistor saturation losses become a larger percentage of the output voltage.

- Thermal

  Requirement for operation below -20°C reduces efficiency by increasing semiconductor voltage drive power. Requirement for operation above 75°C increases weight by controlling filter capacitor selection and structure gauge. Thermal requirements of conducted heat rejection may control structure configuration to increase weight.

3.2.2 Secondary Performance Requirements

Secondary performance requirements affecting converter weight and efficiency are collated below into subgroups with similar effects on converter design. Subgroups are listed in approximate order of importance and major effects are indicated qualitatively.

3.2.2.1 Reliability Requirements

Reliability requirements consist of those requirements selected for intra-converter implementation versus implementation in other equipment or by a different system block diagram.

- Redundancy

  Channel redundancy doubles component weight and adds the weight of logic and transfer circuits. Part redundancy reduces efficiency by increasing saturation and drive losses.

- Fault Isolation (or overload protection)

  Load fault isolation adds the weight and losses of a control circuit as a minimum, and may add saturation losses if multiple loads are supplied by a single converter.

3.2.2.2 Performance Requirements

The following requirements determine filter size and regulator switching frequency.

- Audio Susceptibility

  Magnitude of the specified modulation determines regulator range and gain similarly to input voltage range. Frequency range or band of the specified modulation may affect regulator switching frequency. Efficiency will be reduced and weight increased if damping resistors are required in series with filter capacitors.

- Regulation Against Dynamic Load Variation

  Regulation against step or high frequency load variation increases output filter size, and/or necessitates the addition of secondary regulators.

- Close Tolerance Regulation

  Requirement for regulation better than ±2 percent on units with multiple voltage outputs adds the dissipation and weight of secondary regulators.

3.2.2.3 Number of Outputs

A requirement for more than one output increases weight due to increased number of parts for each additional output, and may degrade efficiency by requiring added regulators in each output.

3.2.2.4 Conducted Interference

A requirement for minimal conducted interference increases weight by adding high frequency input and output filters, and added internal radiation shielding.

3.2.2.5 Special Requirements

- Packaging Constraints

  Occasionally an oversized package is specified for ease of maintainability or standardization reasons. While optimal for other applications, (e.g., data handling circuits or larger converters), the oversized weight of a particular equipment may be undesirable.

- Telemetry Conditioning

  Efficiency is reduced with telemetry conditioning requirements, each of which typically requires 2 to 30 mw of conditioning power. Weight is increased by a small magnitude.

- Synchronization

  Weight is increased slightly, and efficiency is reduced by a small percentage except when EMC requirements require significant filtering and shielding due to the synchronization frequency distribution.

3.3 MODEL CONVERTER SPECIFICATION

The following model converter specification was established as typical for the primary and secondary requirements. Design techniques, component selection, and circuit configurations that will meet this specification are investigated to determine interactions and tradeoffs.

3.3.1 Primary Requirements

• Output power	1 to 200 watts, parametrically variable
• Input voltage range	28 vdc ±15 percent
• Output voltage	28 vdc
• Thermal	-20 to +50°C, mounting base

3.3.2 Secondary Requirements

3.3.2.1 Reliability

• Redundancy	None
• Fault isolation	None

3.3.2.2 Performance

• Output regulation	±3 percent
• Load variation	50 to 100 percent of rated load
• Audio susceptibility	3 volts p-p from 30 cps to 150 kc
• Regulation against dynamic load variation	Not required
• Close tolerance regulation	Not required
• Output ripple	±2 percent

3.3.2.3 Number of Outputs:	1
3.3.2.4 Conducted Interference:	MIL-I-6181
3.3.2.5 Special Requirements:	None

3.4 CONVERTER CIRCUITS

3.4.1 Regulated Square Wave Converter (RSWI)

The block diagram of the RSWI is shown in Figure 3-1, in a configuration convenient for weight and efficiency analysis. Simplified schematics are indicated in each block. All operating frequencies are referenced to the squarewave switching frequency (f) of this circuit. Inversion is performed by a switch consisting of two transistors operating in push-pull into a nonsaturating power transformer. A saturating driver core provides drive and also determines the switching frequency (f). A pulsewidth preregulator is included in the RSWI design to meet the ±3 percent regulation requirement.

Advantages of the RSWI are:

- Minimum inverter design complexity
- Minimum output filter requirements
- Minimum voltage stress on switching transistors for higher reliability

Disadvantages of the RSWI are:

- Maximum overall design complexity due to the need for a separate preregulator
- Frequency dependent inverter transistor switching losses, since one transistor turns on while the other transistor is still in storage time

3.4.2 Pulsewidth Converter (PWI)

The block diagram of the PWI is shown in Figure 3-2. The PWI combines inversion and regulation functions in the pulsewidth converter stage. Switching frequency (f) is determined by a separate oscillator transistor. Duty cycle is controlled by an error amplifier to maintain a constant average rectified output voltage, independent of input variations.

Advantages of the PWI are:

- Regulation and inversion functions are combined in a single element
- Transistor switching load line is controlled so that storage time of the OFF transistor is over before the other transistor turns ON

Disadvantages of the PWI are:

- Transistor voltage rating must be twice maximum input voltage including any transients which are not attenuated by the input filter
- Separate integrating inductors are required for each output as a result of the pulsewidth modulated waveform as opposed to the squarewave for the RSWI converter.

3.4.3 Energy Storage Converter (ES)

The block diagram of the ES is shown in Figure 3-3. When the transistor is on, inductive energy is stored in the transformer/inductor (air gapped transformer) through its primary winding, and load power is supplied from the integrating capacitor. When the transistor is OFF, energy-stored inductively is discharged through the secondary winding, to supply load power and to recharge the capacitor. If the transistor ON time is set equal to T/2 at nominal input voltage, then switching frequency (f) may be varied with input voltage variations to vary the OFF time to maintain constant output voltage.

Advantages of the ES are:

- Inversion and regulation are performed by a single power transistor
- Voltage transformation and energy storage are accomplished by the same magnetics
- Load fault current rate of increase is limited by the transformer inductance, since energy is alternatively stored and discharged each half cycle
- Input and output are isolated.

Disadvantages of the ES are:

- Transistor voltage rating must be equal to twice maximum input voltage, including low frequency transients which are not attenuated by the input filter
- Output ripple is higher due to output capacitor supplying load power during ON time.

3.5 PARAMETRIC DATA CALCULATIONS

Design centers for the converter circuits are selected at typical frequency and power ratings according to the design criteria discussed below for each individual type circuit. Design centers are selected for each frequency or power range where component characteristics (i.e., power dissipation or weight) become limiting and a change in component type is required. These design centers are then expanded over the power and frequency spectrum according to the mathematical model noted.

Weights and efficiencies are calculated from these performance equations for each circuit section using component specifications from manufacturers' data sheets.

The accuracy of this method is periodically checked by comparing selected test data with the parametric data calculated. For example, measured semiconductor loss data allows a straightforward comparison with the calculated data.

The following paragraphs provide the design considerations for each component and combinations of components making up the functional circuit sections.

3.5.1 Input Filter Design

LC input filter is used for all three converter circuit designs, based on the following common requirements:

- The capacitor must supply I load for a period of 1/2f
- Capacitor ripple voltage is less than 1 volt p-p nominal, or less than 10 percent of regulator range
- LC resonant frequency is less than f/5, so that resonant peaks occur before regulator corner frequency.

3.5.1.1 Capacitor Design

Tantalum foil capacitors are applicable for frequencies up to 20 kc. Because input filter capacitance requirements are relatively large, tantalum foil units provide a low specific weight for best weight optimization. However, a large dissipation factor must be accepted. Ceramic capacitors are applicable for frequencies of 20 kc and higher when the capacitive requirements are smaller. The higher specific weight for ceramic units

is less important than the gains attainable by their lower dissipation factor. Figure 3-4 presents the input filter/power loss-frequency data.

The following equations relate the weight and dissipation factor (efficiency) for each of the two types of capacitors as a function of output power and frequency:

- Weight (M_c)

$$M_c = K_1 f^{-1} P_{out} \text{ (lb)} \tag{1}$$

where

$$K_1 = 7.10 \times 10^{-3} \frac{\text{lb kc}}{\text{watt}} \qquad (f \leq 20 \text{ kc})$$

$$K_1 = 5.50 \times 10^{-2} \frac{\text{lb kc}}{\text{watt}} \qquad (f > 20 \text{ kc})$$

- Efficiency (N_c)

$$N_c = 100 - K_2 f \text{ (percent)} \tag{2}$$

where

$$K_2 = 6 \times 10^{-2} \text{ kc}^{-1} \qquad (f \leq 20 \text{ kc})$$

and

$$K_2 = 6 \times 10^{-3} \text{ kc}^{-1} \qquad (f > 20 \text{ kc})$$

3.5.1.2 Inductor Design

Laminated core materials are applicable for frequencies up to 4 kc. Above 4 kc, powdered cores are necessary to obtain adequate high frequency permeability. When inductance requirements are large, such as for the input filter, it is desirable to use the laminated core materials to minimize weight by storing energy in an air gap. The core losses associated with the resulting ac flux density are acceptable when they are approximately equal to the copper losses.

The following equations relate the weights and power losses (efficiency) for each of the two types of core materials (Figure 3-4) as a function of output power and frequency:

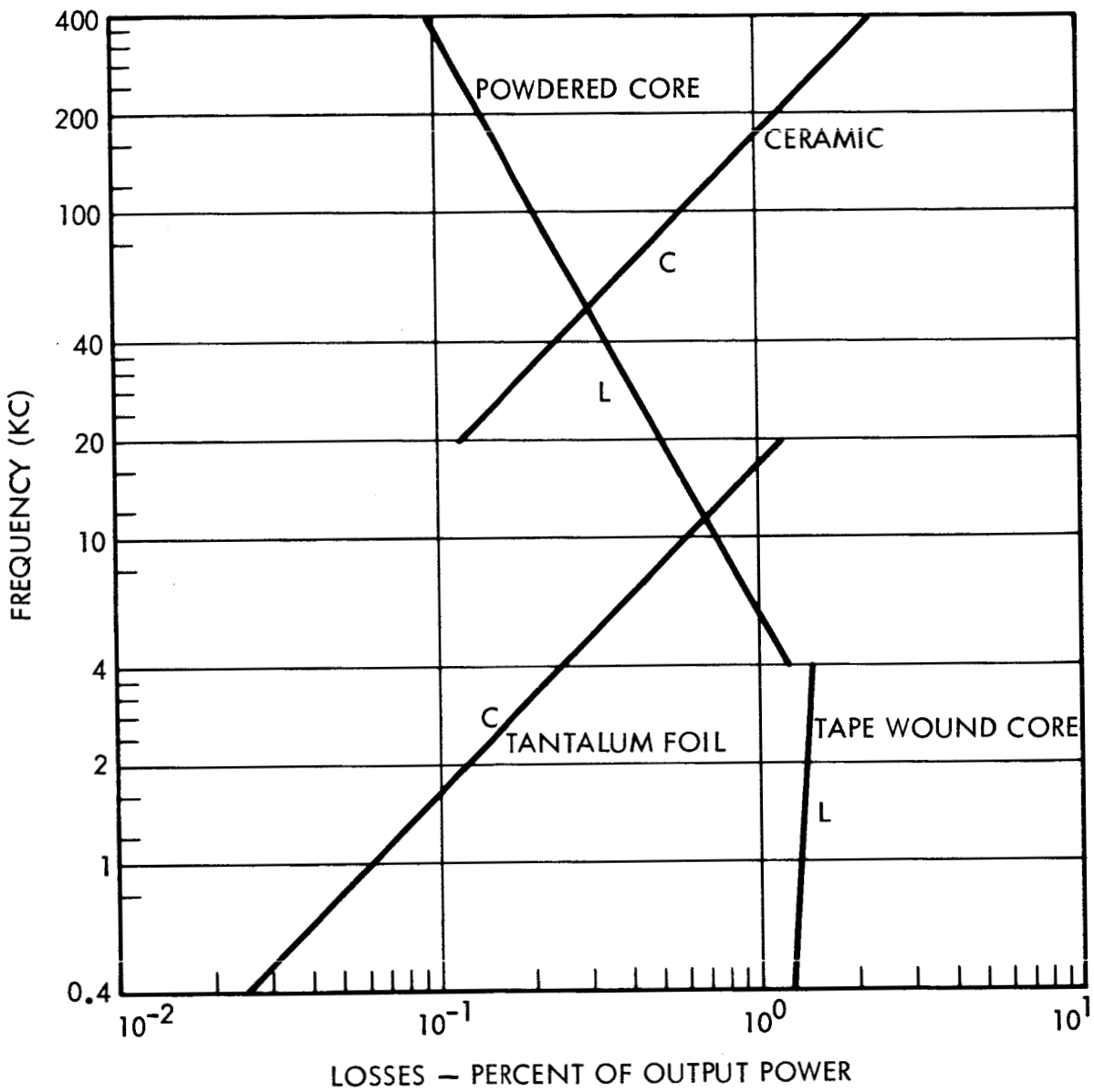

Figure 3-4. Input Filter Losses for all Three Converter Circuits

- Weight (M_L)

$$M_L = K_3 f^{-0.75} \left(P_{out}\right)^{0.75} \text{ (lb)} \tag{3}$$

where

$$K_3 = 9.1 \times 10^{-3} \frac{\text{lb kc}}{\text{watt}} \qquad (f \leq 4 \text{ kc})$$

$$K_3 = 1.80 \times 10^{-2} \frac{\text{lb kc}}{\text{watt}} \qquad (f > 4 \text{ kc})$$

- Efficiency (N_L)

$$N_L = 100 - \left(K_4 f^{0.68} + K_5 f^{-0.75}\right) \text{ (percent)} \tag{4}$$

where

$$K_4 = 0.5 \text{ kc}^{-1} \qquad (f \leq 4 \text{ kc})$$

$$K_4 = 0.02 \text{ kc}^{-1} \qquad (f > 4 \text{ kc})$$

$$K_5 = 0.05 \text{ kc} \qquad (f < 4 \text{ kc})$$

$$K_5 = 3.5 \text{ kc} \qquad (f > 4 \text{ kc})$$

3.5.1.3 Input Filter Summary

All three of the baseline circuits being considered have an input LC type filter. The function and operating modes of the filter for each circuit are very similar. The following summary equations combine the capacitor and inductor equations from the previous paragraphs.

- Weight (M)

$$M_1 = M_{C1} + M_{L1} \text{ (lb)}$$

$$M_1 = K_1 f^{-1} P_{out} + K_3 f^{-0.75} \left(P_{out}\right)^{0.75} \text{ (lb)} \tag{5}$$

- Efficiency (N)

$$N_1 = N_{C1} N_{L1} \text{ (percent)}$$

$$N_1 = (100 - K_2 f) \left[100 - \left(K_4 f^{0.68} + K_5 f^{-0.75}\right)\right] \text{ (percent)}$$

3.5.2 Integrating Filter Design

An LC type integrating filter is used in the output of the pulsewidth pre-regulator in the RSWI circuit, and in the output of the PWI circuit. The integrating filter for the ES circuit performs differently and is discussed in Section 3.5.3. The specification requirement that regulation be maintained to 50 percent minimum load requires that the inductor (L_2) limit the change in current (ΔI) to 100 percent of the load current (I_L) during the period 0.3/f. In order to maintain closed loop stability, the resonant frequency of the inductor and capacitor must be greater than f/25.

The weight-power loss tradeoff for the inductor design, Figure 3-5, suggests the use of Hypersil core material for frequencies below 4 kc. Above 4 kc, Permalloy core material would be selected.

The capacitor design is similar to that of Paragraph 3.5.1.1, for the input filter design, with tantalum foil capacitors used up to 20 kc and ceramic capacitors above 20 kc.

The following expressions provide the weight and efficiency relationships for the integrating filter design as functions of output power and switching frequency.

- Weight (M)

$$M_2 = M_{L2} + M_{C2} \text{ (lb)} \tag{7}$$

$$M_2 = K_6 f^{-0.75} \left(P_{out}\right)^{0.75} + K_7 f^{-1} P_{out} \text{ (lb)}$$

where

$$K_6 = 3.5 \times 10^{-2} \frac{\text{lb kc}}{\text{watt}} \qquad (f < 4 \text{ kc})$$

$$K_6 = 7.3 \times 10^{-2} \frac{\text{lb kc}}{\text{watt}} \qquad (f \geq 4 \text{ kc})$$

$$K_7 = 2.2 \times 10^{-2} \frac{\text{lb kc}}{\text{watt}} \qquad (f < 20 \text{ kc})$$

$$K_7 = 1.8 \times 10^{-1} \frac{\text{lb kc}}{\text{watt}} \qquad (f \geq 20 \text{ kc})$$

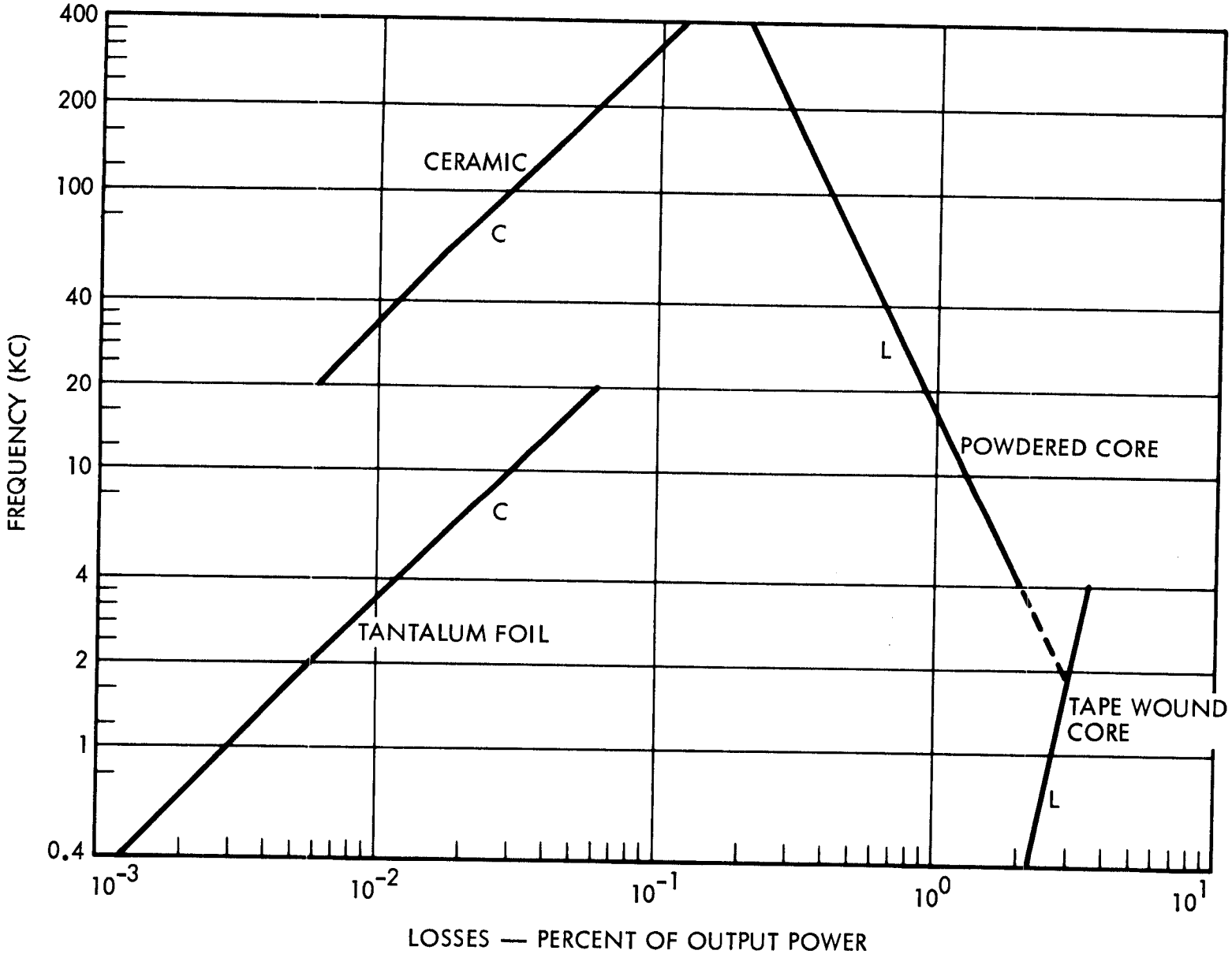

Figure 3-5. Integrating Filter Losses for RSWI and PWI Converter Circuits

- Efficiency (N)

$$N_2 = N_{L2} N_{C2} \text{ (percent)} \tag{8}$$

$$N_2 = \left[100 - \left(K_8 f^{0.68} + K_9 f^{-0.75}\right)\right]\left(100 - K_{10} f\right) \text{ (percent)}$$

where

$K_8 = 1.2 \text{ kc}^{-1}$ $(f < 5 \text{ kc})$

$K_8 = 0.05 \text{ kc}^{-1}$ $(f \geq 5 \text{ kc})$

$K_9 = 0.8 \text{ kc}$ $(f < 4 \text{ kc})$

$K_9 = 5.6 \text{ kc}$ $(f \geq 4 \text{ kc})$

$K_{10} = 3 \times 10^{-3} \text{ kc}^{-1}$ $(f \leq 20 \text{ kc})$

$K_{10} = 3 \times 10^{-4} \text{ kc}^{-1}$ $(f > 20 \text{ kc})$

3.5.3 Energy Storage Filter Design

The energy storage filter is also an integrating filter, but utilizes the large inductance of the inverter transformer. Thus, only an output capacitor need be added.

The specification requirement for regulation to 50 percent minimum load requires the inductor to limit the current change (ΔI) to 100 percent of the load current (I_L) during the period 0.5/f. The closed loop stability requires the resonant frequency of the inductor and capacitor to be greater than f/25. This requirement, rather than the output ripple specification, controls the capacitance value.

Selection of the core material and type of capacitor as a function of the operating frequency, Figure 3-6, is similar to the integrating filter design, for the RSWI and PWI converters namely Hypersol for frequencies below 4 kc and Permalloy above 4 kc.

The following equations represent the weight and efficiency design relationships for the ES converter circuit.

- Weight (M)

$$M_3 = M_{L2} + M_{C2} \text{ (lb)}$$

$$M_3 = K_{11} f^{-0.75} \left(P_{out}\right)^{0.75} + K_{12} f^{-1} P_{out} \text{ (lb)} \tag{9}$$

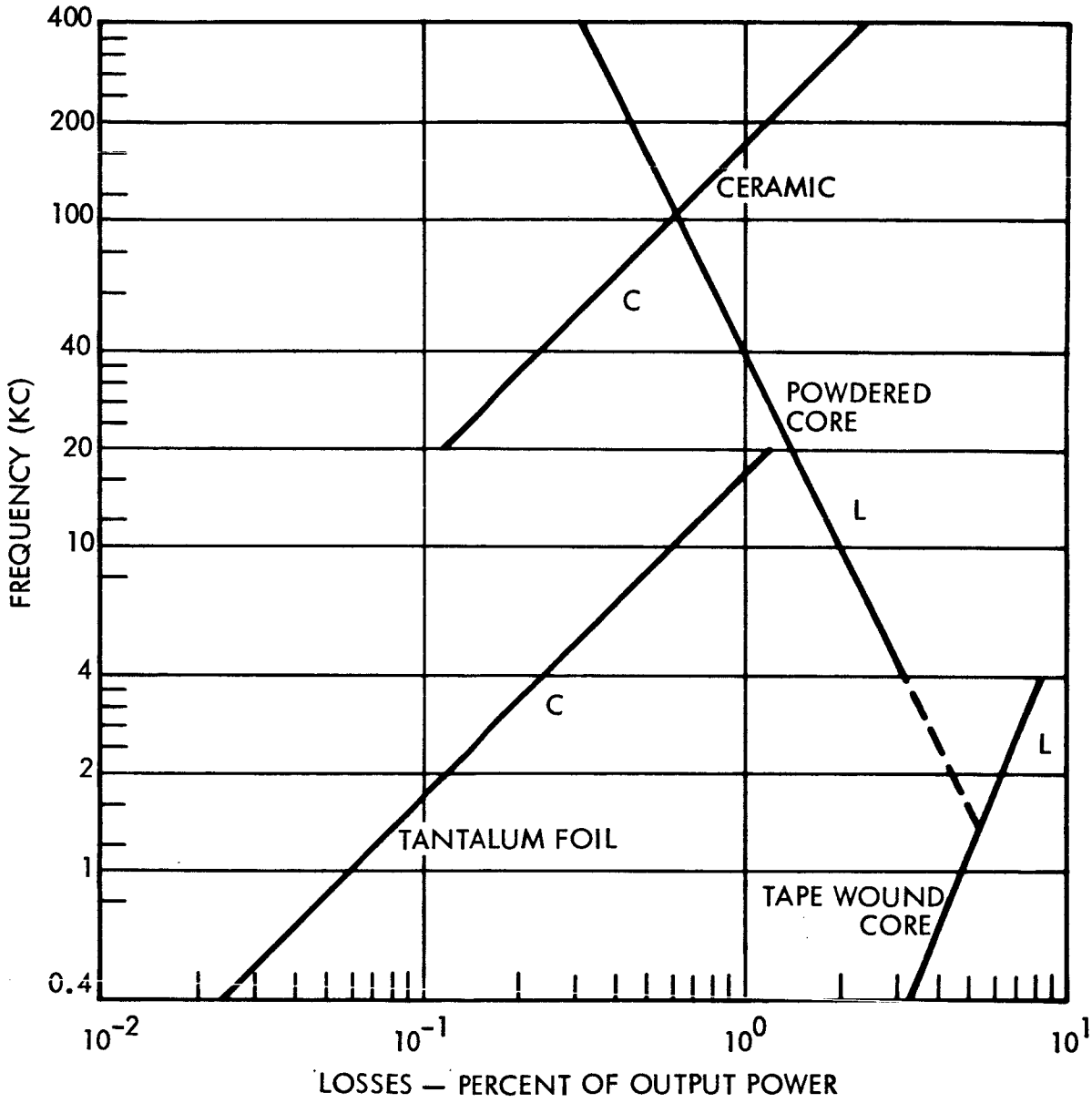

Figure 3-6. ES Converter, Integrating Filter Losses

where

$$K_{11} = 5.1 \times 10^{-2} \frac{\text{lb kc}}{\text{watt}} \qquad (f < 4 \text{ kc})$$

$$K_{11} = 1.02 \times 10^{-1} \frac{\text{lb kc}}{\text{watt}} \qquad (f \geq 4 \text{ kc})$$

$$K_{12} = 4.9 \times 10^{-2} \frac{\text{lb kc}}{\text{watt}} \qquad (f < 20 \text{ kc})$$

$$K_{12} = 3.6 \times 10^{-1} \frac{\text{lb kc}}{\text{watt}} \qquad (f \geq 20 \text{ kc})$$

- Efficiency (N)

$$N_3 = N_{L2} N_{C2} \text{ (percent)}$$

$$N_3 = \left[100 - \left(K_{13} f^{0.68} + K_{14} f^{-0.75}\right)\right] \left(100 - K_{15} f\right) \qquad (10)$$

where

$$K_{13} = 1.6 \text{ kc}^{-1} \qquad (f < 4 \text{ kc})$$

$$K_{13} = 0.075 \text{ kc}^{-1} \qquad (f \geq 4 \text{ kc})$$

$$K_{14} = 1.2 \text{ kc} \qquad (f < 4 \text{ kc})$$

$$K_{14} = 8.4 \text{ kc} \qquad (f \geq 4 \text{ kc})$$

$$K_{15} = 6 \times 10^{-2} \text{ kc}^{-1} \qquad (f < 20 \text{ kc})$$

$$K_{15} = 6 \times 10^{-3} \text{ kc}^{-1} \qquad (f \geq 20 \text{ kc})$$

3.5.4 Transformer Rectifier

The transformer rectifier elements of the RSWI and PWI circuits are similar to the TR units previously reported in the Third Quarterly Progress Report. The same parametric equations and curves are used to determine the weight and efficiencies for these circuits. Application of the TR data to the ES converter circuit is not required since the transformer function is performed by the filter inductor, which is the controlling design requirement. The rectifier data for the ES converter circuit is included with the semiconductor data.

3.5.5 Semiconductor Circuit Design

Each of the three circuits considered contain both transistors and diodes whose weight and efficiencies depend strongly upon the output power and operating frequency. The semiconductor weights considered here include only the component weight. The hardware weight required for structural and thermal reasons is derived in Section 3.5.7.

Semiconductor losses are divided into a steady-state (frequency independent) component, and a switching (frequency dependent) component. Steady-state losses consist of drive circuit power and saturation dissipation. Switching losses result during transition between the minimum voltage, full current ON state; and the full voltage, zero current OFF state. At the higher operating frequencies, the efficiency of the equipment is reduced because of the higher average switching losses.

A theoretical model analysis was performed on three circuits to establish the semiconductor currents, voltage, instantaneous power losses, average power losses, and I-V curves. The items investigated were the transistor's turn-on time, turn-off time, and storage time, and the power diode's turn-on and turn-off or recovery time. Ideal transformers and chokes were used in the model and therefore magnetic capacitance and leakage inductance did not show up in the characteristic waveforms. The following is a list of parameters for typical semiconductors used in the circuits.

Transistors			
Transistor Type	Turn-on Time t_1	Turn-off Time t_4	Storage Time t_5
1 amp 10 amp	100 nsec 1 μsec	100 nsec 1 μsec	200 nsec 2 μsec

Diodes			
Diode Type	Recovery Time t_2	Recovery Current I_R	Turn-on Time t_3
1 amp	150 nsec	Equals forward current	10 nsec
10 amp	500 nsec	Equals forward current	10 nsec

3.5.5.1 Regulated Square Wave Converter (RSWI)

The remaining portions of this circuit consist primarily of semiconductor components such as transistors and diodes. The functional sections of the circuit containing semiconductors, as shown in Figure 3-1, are a switching dc pulsewidth preregulator and a conventional squarewave inverter.

The weights of the semiconductors—one transistor and one diode—in the pulsewidth preregulator are related to the two listed current ratings. A ten watt (or less) converter would use the 1-amp transistor and diode weighing a total of 0.01 lb. Larger power converters, up to 200 watts, would use the 10-amp devices weighing a total of 0.025 lb.

The power losses associated with the semiconductors are divided into steady-state and switching losses. The transistor steady-state losses consist of the base drive power and the saturated drop power loss. The base drive power was calculated to be 2.7 percent of the output power, and 1.8 percent of the output power for the saturated drop power loss.

The transistor switching losses in watts for the pulsewidth preregulator are related to the device switching times as given by the following equation

$$P_{loss} = \frac{1}{T}\left[t_1 \frac{E_{in}I_L}{2} + t_2 \frac{E_{in}}{2}(I_R + I_L) + t_3 \frac{E_{in}I_L}{2} + t_4 \frac{E_{in}I_L}{2}\right] \qquad (11)$$

where T is period of one complete cycle and is equal to 1/f defined by the reference drive frequency

t_1 = transistor turn-on time

t_2 = diode recovery time

t_3 = diode turn-on time

t_4 = transistor turn-off time

t_5 = transistor storage time

E_{in} = input supply voltage

I_L = load current

I_R = diode recovery current

Note that t_5, the transistor storage time, does not appear in the above equation and does not contribute to the transistor losses. However, its effect is to decrease the total controllable range of the preregulator. The maximum percentage ratio for the control range is given by Equation (12).

$$\frac{t_{on}}{T} \times 100 = \frac{T - (t_1 + t_2 + t_3 + t_4 + t_5)}{T} \times 100 \qquad (12)$$

Typical values of Equation (11) for the two device ratings are:

For 1 amp transistor: $80 \times 10^{-8} f\, P_{out}$ (watts)

For 10 amp transistor: $470 \times 10^{-8} f\, P_{out}$ (watts)

The diode steady-state power loss was calculated to be 3.5 percent of the output power. The diode switching loss is given by Equation (13).

$$P_{loss} = \frac{t_2 E_{in} I_R}{2T} \text{ (watts)} \qquad (13)$$

This switching loss occurs during the turn-off time only, because very little energy is required to turn the diode on. The maximum losses occur at maximum input voltage. The evaluation of Equation (13) provides the following values for each diode rating:

For 1 amp: $23 \times 10^{-8} f\, P_{out}$ (watts)

For 10 amp: $120 \times 10^{-8} f\, P_{out}$ (watts)

The weight of the two transistors in the squarewave inverter section is 0.01 lb for 1 amp devices (less than 10 watts), and 0.025 lb for the 10 amp devices (10 to 200 watts).

Like before, the power losses associated with the transistors are divided into steady-state and switching losses. The steady-state losses are calculated to be 2.7 percent of the output power for the base drive power and 1.8 percent of output power for the saturated drop power loss.

The transistor switching losses for the squarewave inverter section are given by Equation (14).

$$P_{loss} = \frac{I_\beta \beta E_{in}}{T}\left[\frac{3(t_5 - t_1)}{2} + t_4 + \frac{t_1}{2}\right] \text{(watts)} \qquad (14)$$

where

I_β is the transistor base current

β is the transistor current gain

The above equation gives the loss of only one transistor of the inverter; therefore the total switching losses are double that given by Equation (14). Note that t_5, the storage time, has a predominant effect on the power loss and that the transistor collector current can reach a value many times the load current depending on the actual beta of the transistor at the operating current level. Proper circuit design can minimize the losses due to t_5. The values of Equation (14) for two transistors at each selected current rating are:

For 1 amp: $120 \times 10^{-8} f\, P_{out}$ (watts)

For 10 amp: $1200 \times 10^{-8} f\, P_{out}$ (watts)

3.5.5.2 Pulsewidth Converter (PWI)

The semiconductor sections of this circuit as shown in Figure 3-2, are the pulsewidth converter transistors and the diode in the integrating filter. The weight of these semiconductors is 0.015 lb for the 1-amp rating (less than 10 watts), and 0.045 for the 10-amp rating (10 to 200 watts).

The total transistor and diode losses are identical to those provided for the pulsewidth preregulator design described in Section 3.5.5.1.

3.5.5.3 Energy Storage Converter (ES)

One transistor and driver stage in the inverter/transformer/integrating inductor section and one diode in the rectifier section, as shown in Figure 3-3, constitute all of the semiconductors in this circuit. The weights of the semiconductors are the same as given for the pulsewidth regulator, i.e., 0.01 lb and 0.025 lb.

The steady-state power losses in the transistor due to driver power is 2.7 percent of the output power. The saturated drop power losses are 1.8 percent of the output power. The steady-state diode loss is 2.5 percent of the output power.

Switching losses in the power transistor are given by Equation (15)

$$P_{loss} = \frac{E_{in} I_L}{T} (2t_1 + t_2 + 2t_3 + 2t_4) \text{ (watts)} \tag{15}$$

Again maximum power loss occurs at maximum input voltage. The values of Equation (15) for the two transistor ratings are:

$$\text{For 1 amp: } 63 \times 10^{-8} f\, P_{out} \text{ (watts)}$$

$$\text{For 10 amp: } 480 \times 10^{-8} f\, P_{out} \text{ (watts)}$$

The diode switching losses are

$$P_{loss} = \frac{t_2 E_{in} I_R}{2T} \text{ (watts)} \tag{16}$$

The values of Equation (16) for the two ratings are

$$\text{For 1 amp: } 1.2 \times 10^{-8} f\, P_{out} \text{ (watts)}$$

$$\text{For 10 amp: } 40 \times 10^{-8} f\, P_{out} \text{ (watts)}$$

3.5.6 Error Amplifier Circuit

The error amplifiers for each of the three circuits are similar in design and consist of the voltage reference circuit, two stages of amplifier gain and conversion circuit providing the transistor(s) drive power.

The power losses can be defined as a constant value and a variable value which is a function of the drive power. The constant power losses for the voltage reference and the two stages of gain are 200 mw for output powers greater than one watt, and 120 mw for output powers less than one watt. The variable power losses for the low level conversion circuit of the drive power is 30 percent of the total circuit drive power.

The weights of the error amplifiers have a fixed component and a variable component which is a function of the drive power. The fixed component of weight for the voltage reference circuit and two stages of amplification is 0.022 lb. The variable weight component associated with the conversion circuit for the drive is given by the following equation

$$M = 0.03 + 0.2\, P_{drive} \text{ (lb)} \tag{17}$$

3.5.7 Structural Weight

The converter structural weights is subject to two design requirements.

- The structure must support the components, meet vibration and shock specifications, and allow convenient assembly, test, and maintainence.
- The structure must transfer waste heat to the external environment.

One of these two requirements will establish the larger but necessary equipment weight for each output power level and frequency. When the equipment weight is established by the first requirement, the curve of Figure 3-7 was used to determine equipment weight from the calculated components weight. The ratio of equipment weight to components weight (Figure 3-7) increases below a 10-pound components weight because component sizes approach a minimum limit independent of power. This determination of equipment weight also establishes the minimum volume in which the components could be packaged. An average value of 0.05 lb/in^3 was used to calculate the minimum volume.

In order to make a quick determination if the equipment weight would be established by the heat transfer requirement, the curve of Figure 3-8 was used to determine the equipment weight from the previously calculated efficiencies (power loss). Figure 3-8 was based upon the following assumptions:

- Heat is transfered away from the converter by conduction and radiation only, due to the vacuum environment.
- The ambient temperature is $50^{o}C$.
- The equipment temperature rise is limited to $20^{o}C$ with an emissivity of 0.9.
- The average heat conduction rate to the mounting base is 0.5 $watt/in^2$ of base area.
- The average heat radiation rate is 0.1 $watt/in^2$ of surface area.
- The average equipment density is 0.035 lb/in^3.
- The equipment structure is cube shaped.

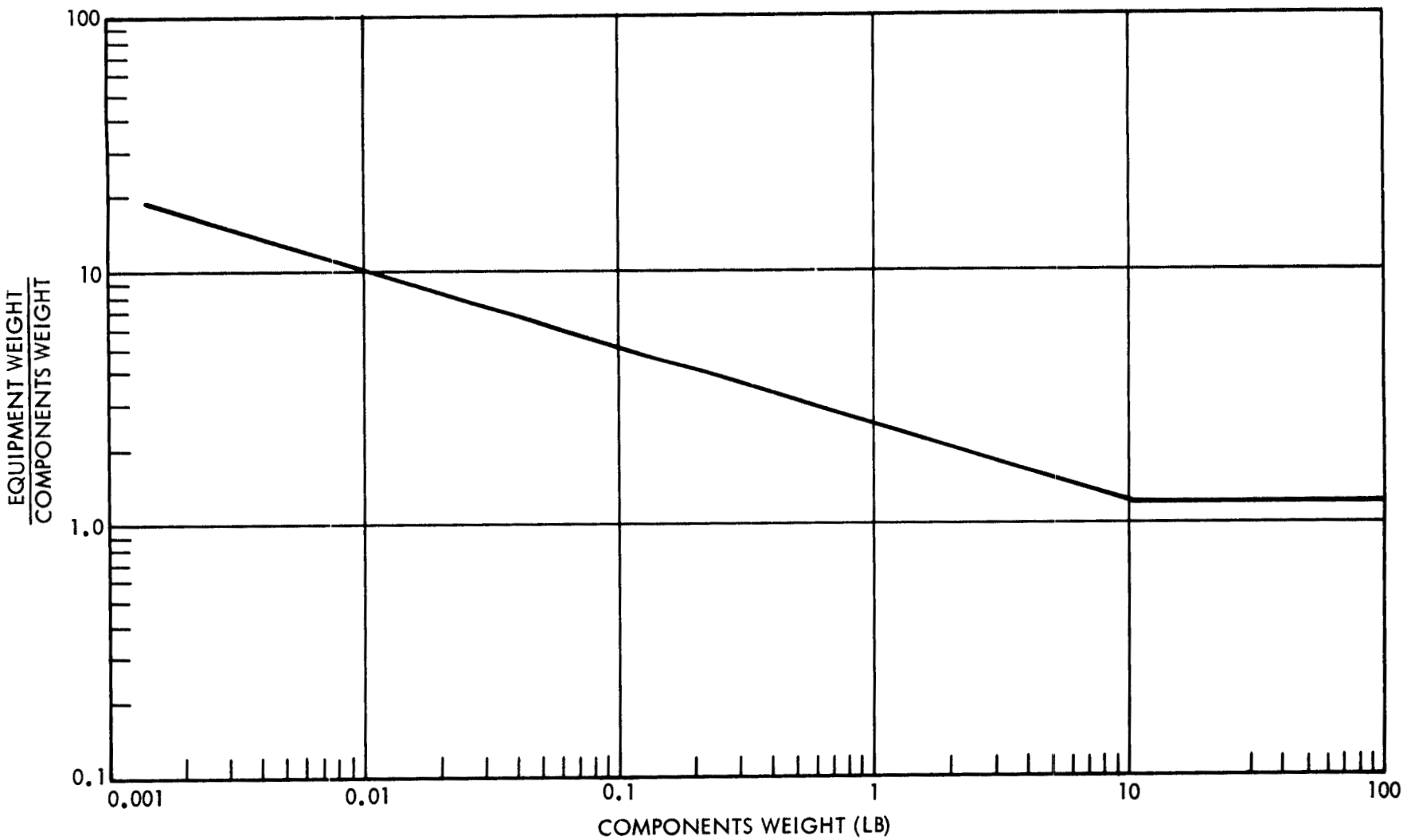

Figure 3-7. Ratio of Equipment Weight to Components Weight

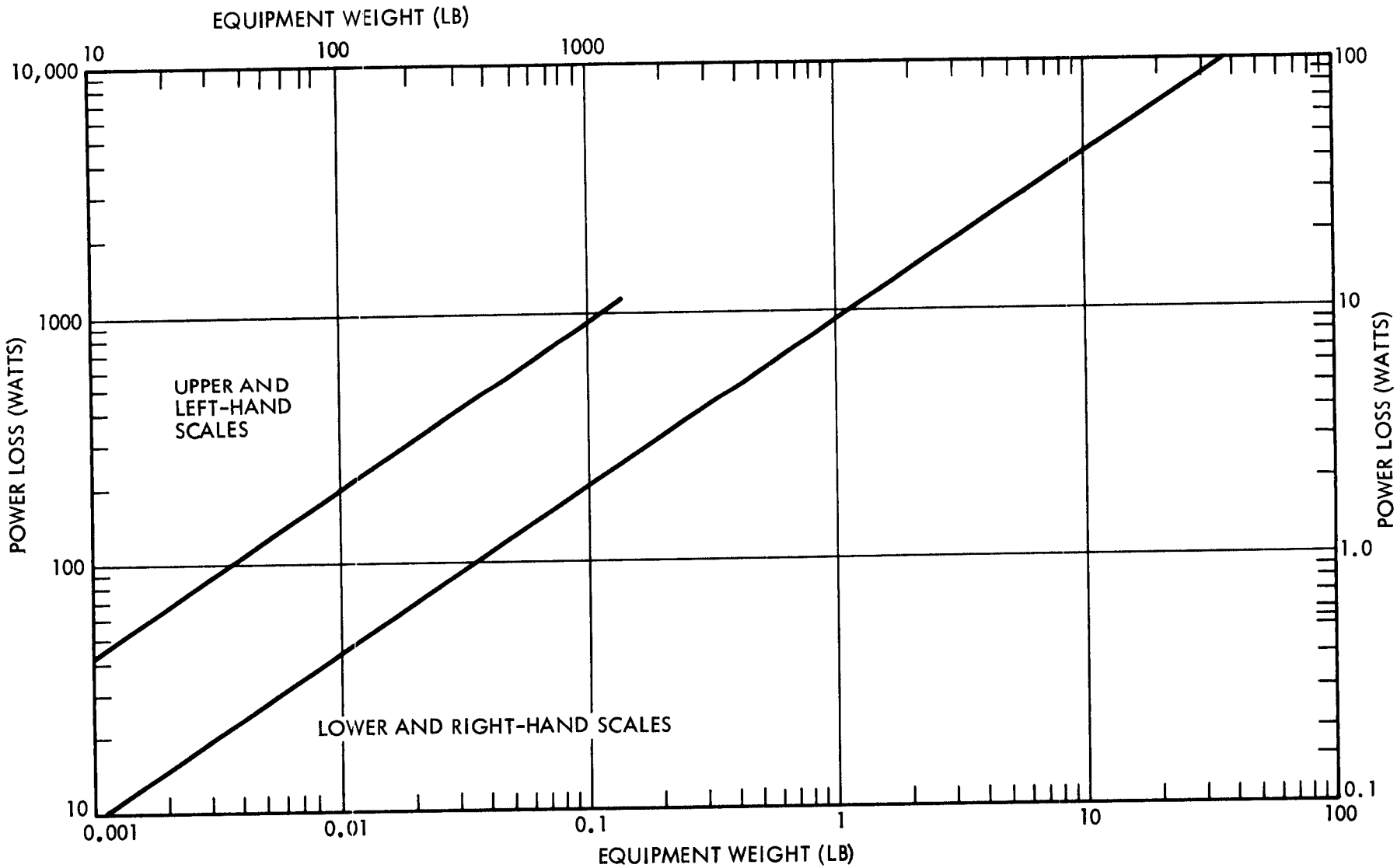

Figure 3-8. Equipment Power Dissipation Versus Weight

The cube shape was chosen because it has the largest volume-to-surface area ratio for the most common packaging shapes. If the height of a rectangular shaped box is assumed equal to or less than the length or width, then a cube is also the limiting shape for the heat transfer conditions. Whenever the equipment weight determined from Figure 3-8 is less or equal to the equipment weight established by Figure 3-7, the required weight is not established by the heat dissipation, since any other desirable shape would provide a greater heat transfer.

Figures 3-9, 3-10, and 3-11 present three converter equipment weights as a function of power level, frequency, and packaging limitations. The solid lines represent the total packaged weight when only component and minimum structural weights are considered. The uniformly dashed lines, starting from their respective intersection with the solid lines, represent the total packaged weight when thermal dissipation requires an increase in surface area and, therefore, an increase in volume and weight. Because the cube is the most inefficient rectangular thermal shape, the dashed lines represent maximum equipment weight.

Analysis of the heat transfer parameters related to the package geometry disclosed a graphical method (Figure 3-12 and 3-13) for choosing the most optimum rectangular shape. The derivation and use of these curves is presented in Appendix A. The objective of the heat transfer analysis was to increase the package thermal dissipation without unnecessary volume and weight increases. The heat conduction and radiation rates, 0.5 and 0.1 watts per square inch respectively, were found to be on the average representative of most spacecraft designs. Therefore, the rates were not varied for this analysis. Starting with a cube having a constant minimum volume set by components to be packaged, the surface area can be increased by reducing the height until a minimum height, set by the largest component, is reached. A further increase in surface area and, therefore, heat dissipation is accomplished by holding the minimum height and volume, and changing the base shape from a square to a rectangle. Maximum heat transfer for this volume is reached when the length to width ratio is increased to its maximum practical limit. Figure 3-12 presents heat dissipation (watts) as a function of a square base area (length to width ratio K = 1), height and volume. Figure 3-13 presents similar data when the length-to-width ratio (K) = 5. A maximum ratio of 5 was considered practical for most designs.

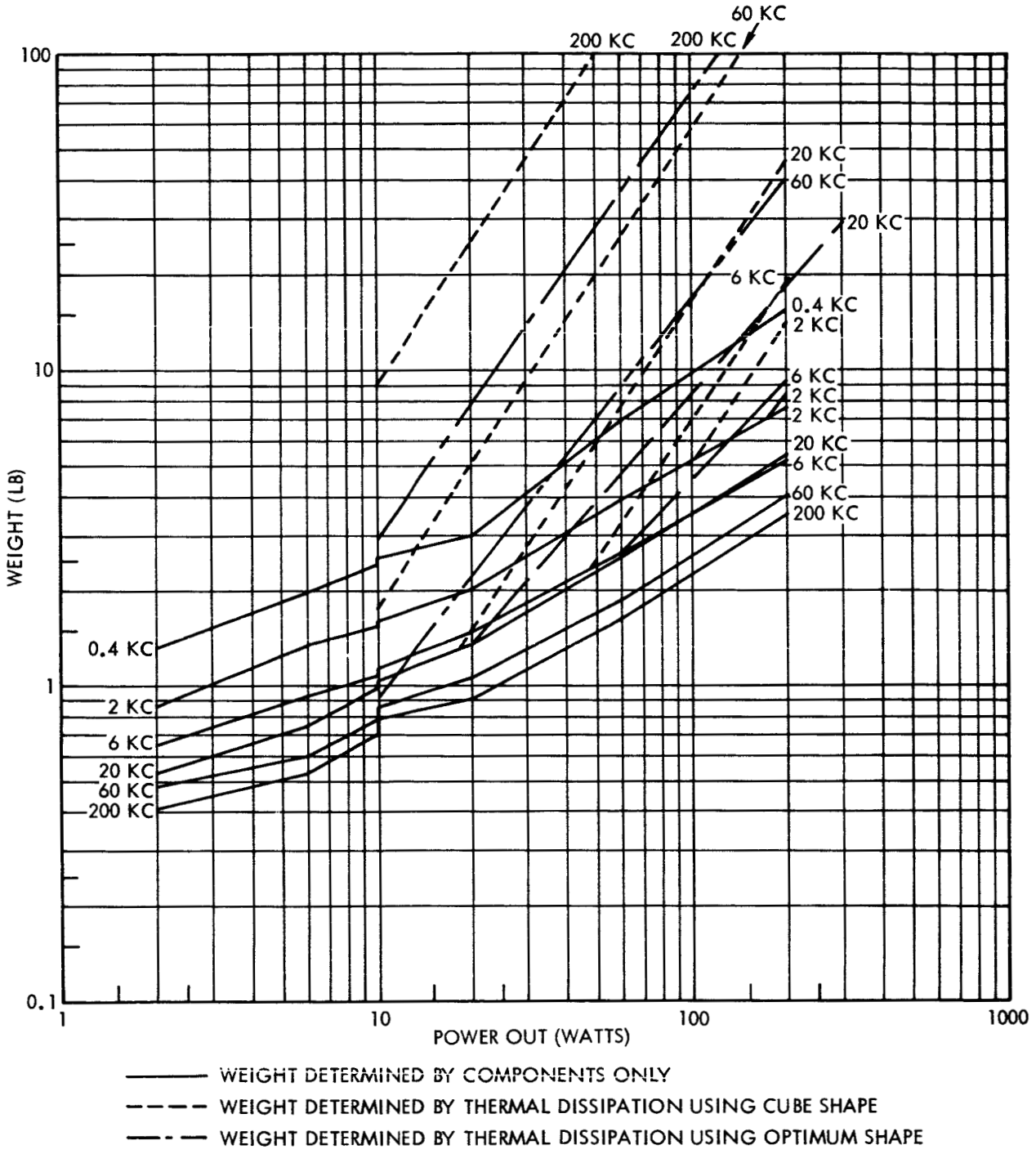

——— WEIGHT DETERMINED BY COMPONENTS ONLY

– – – – WEIGHT DETERMINED BY THERMAL DISSIPATION USING CUBE SHAPE

—·— WEIGHT DETERMINED BY THERMAL DISSIPATION USING OPTIMUM SHAPE

Figure 3-9. RSWI Converter Weight

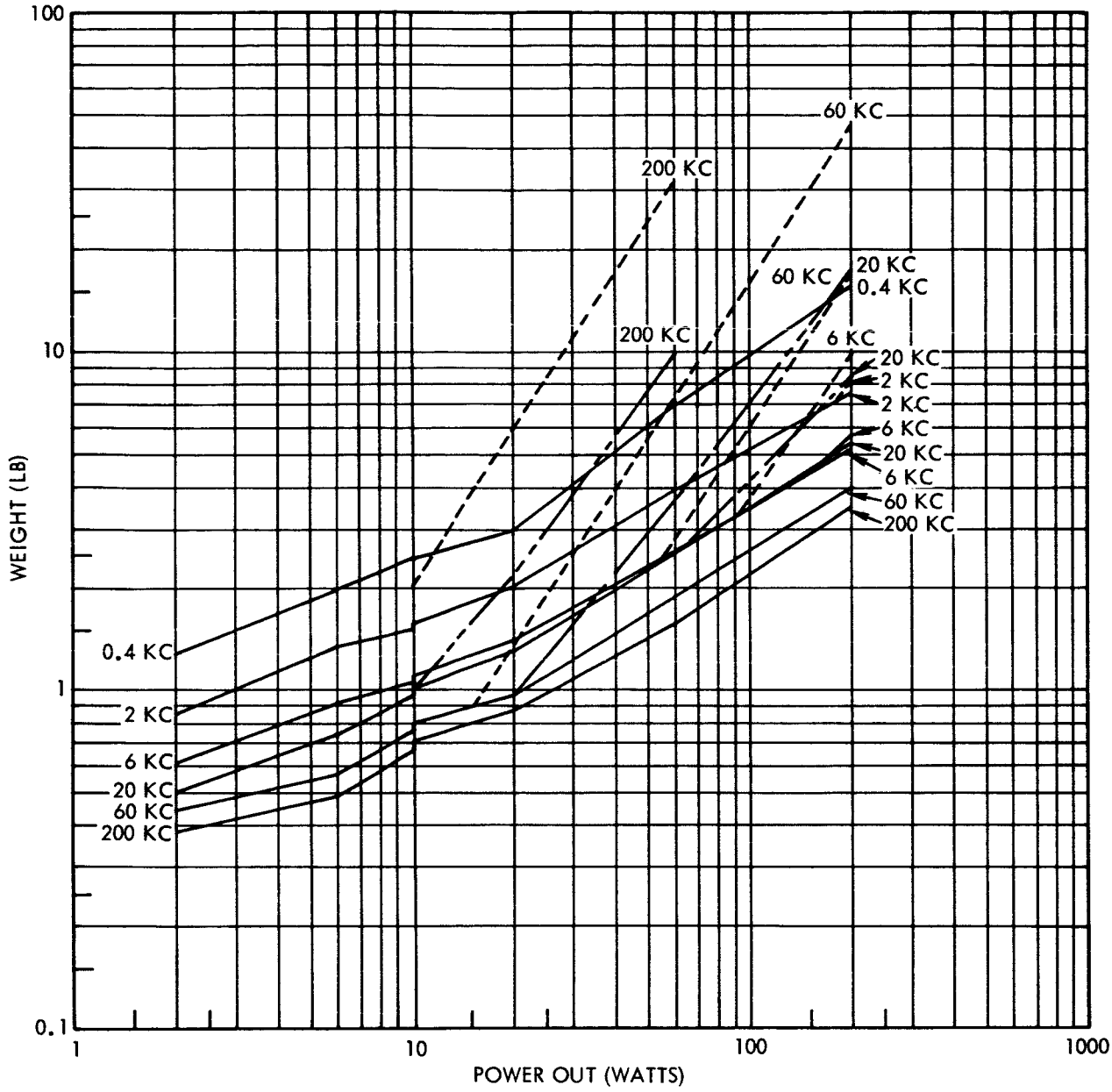

——— WEIGHT DETERMINED BY COMPONENTS ONLY

– – – – WEIGHT DETERMINED BY THERMAL DISSIPATION USING CUBE SHAPE

—·—·— WEIGHT DETERMINED BY THERMAL DISSIPATION USING OPTIMUM SHAPE

Figure 3-10. PWI Converter Weight

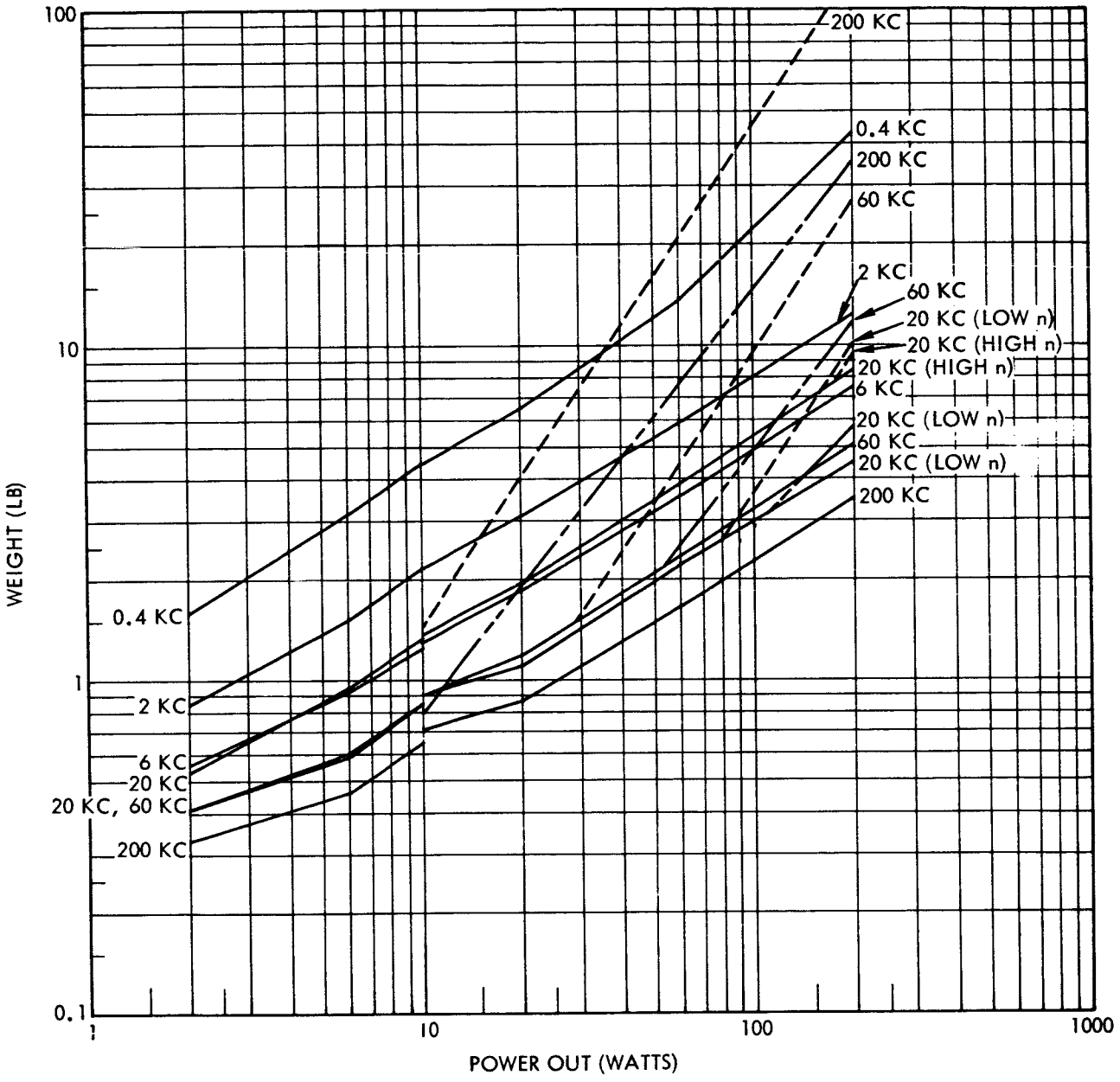

——— WEIGHT DETERMINED BY COMPONENTS ONLY

- - - - - WEIGHT DETERMINED BY THERMAL DISSIPATION USING CUBE SHAPE

—·-·— WEIGHT DETERMINED BY THERMAL DISSIPATION USING OPTIMUM SHAPE

Figure 3-11. ES Converter Weight

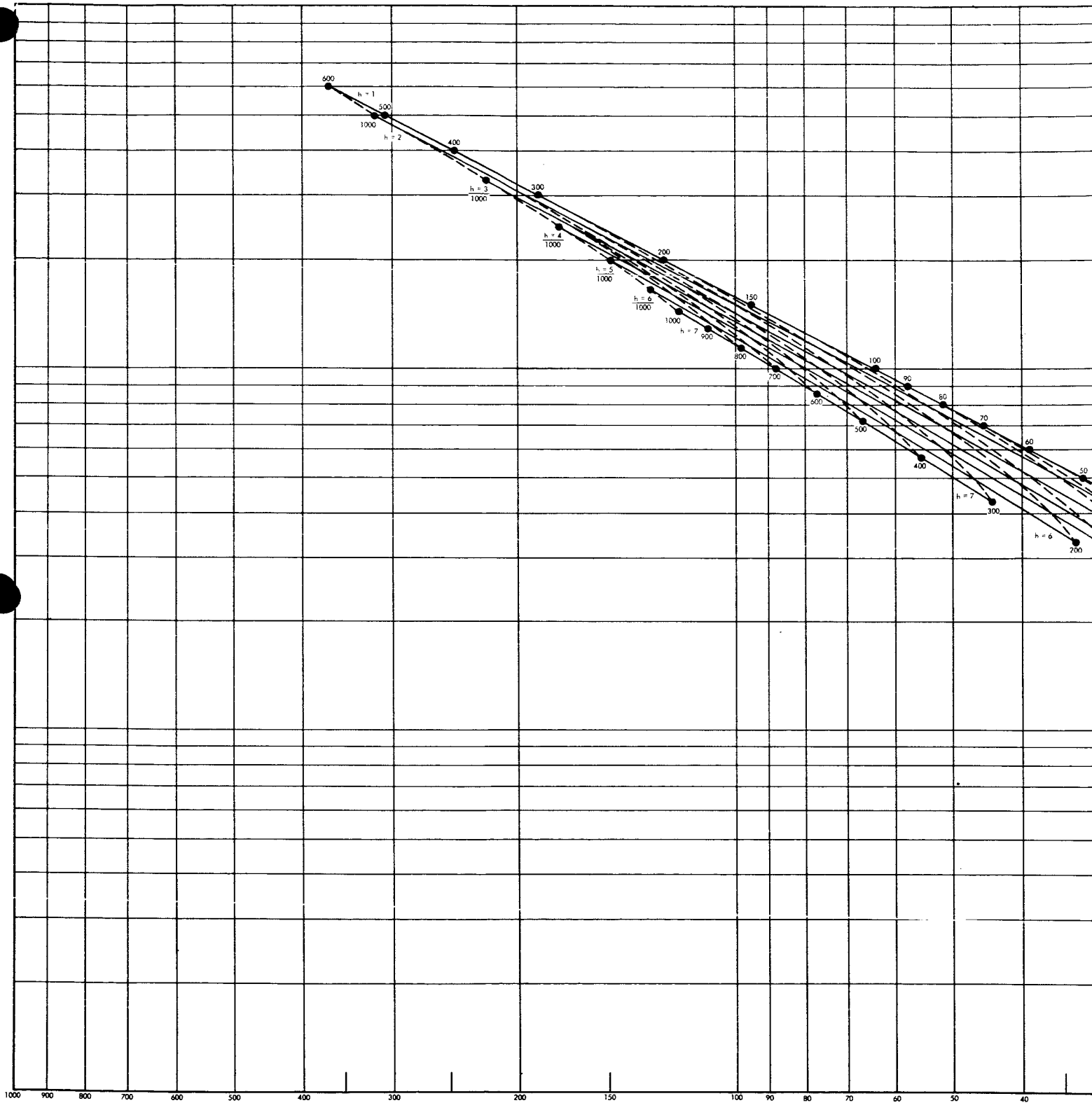
600
h = 1
500
1000
h = 2
400
h = 3
1000
300
h = 4
1000
200
h = 5
1000
h = 6
1000
150
1000
h = 7
900
800
700
600
500
400
100
90
80
70
60
50
h = 7
300
h = 6
200
1000
900
800
700
600
500
400
300
200
150
100
90
80
70
60
50
40
POWER

34-1

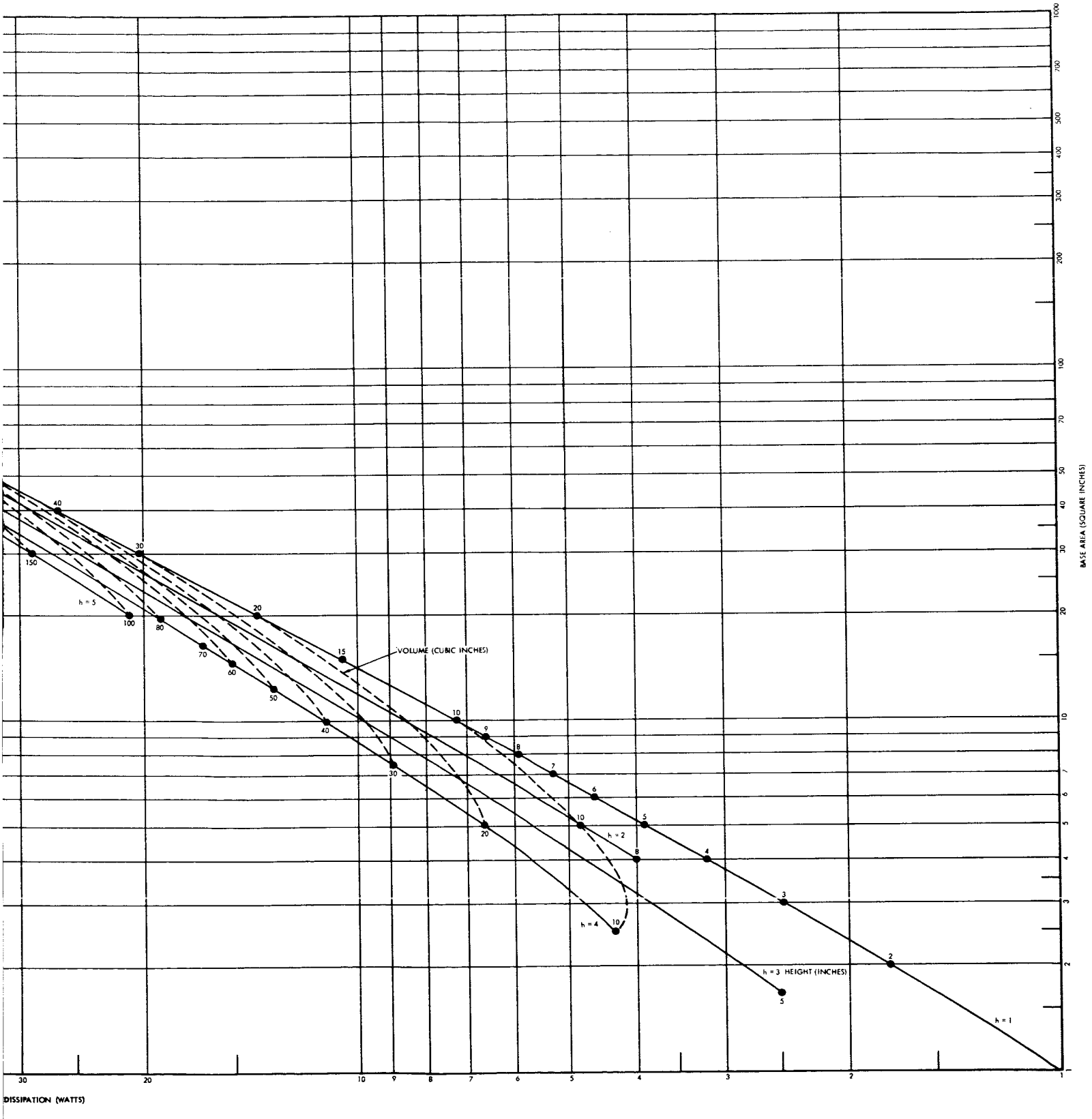

Figure 3-12. Structure—Thermal Optimization—K = 1

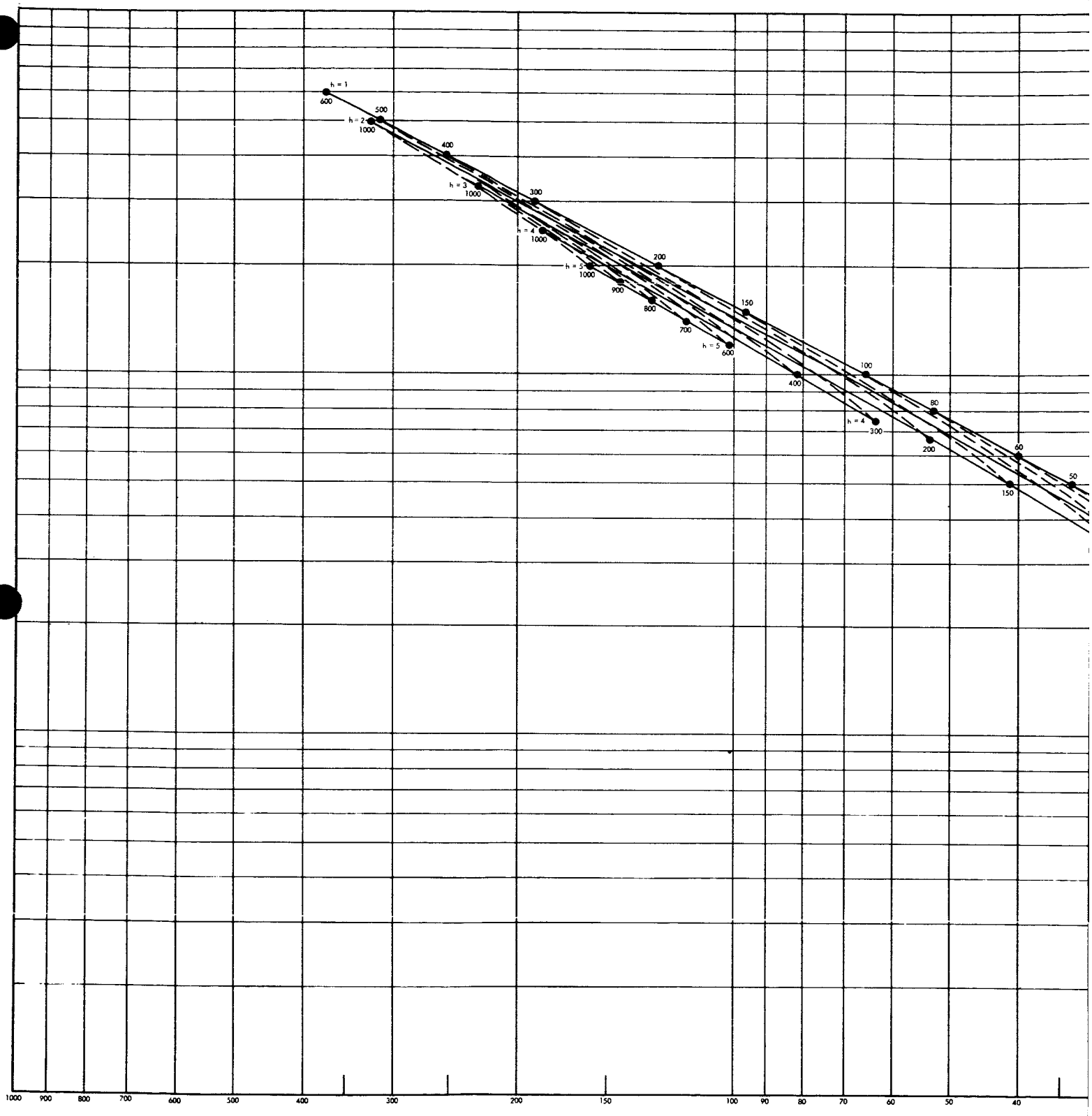
h = 1
600
500
h = 2
1000
400
h = 3
1000
300
h = 4
1000
200
h = 5
1000
900
800
150
700
h = 5
600
400
100
80
h = 4
300
200
60
150
50
1000
900
800
700
600
500
400
300
200
150
100
90
80
70
60
50
40
POWER DISSIPA

35-1

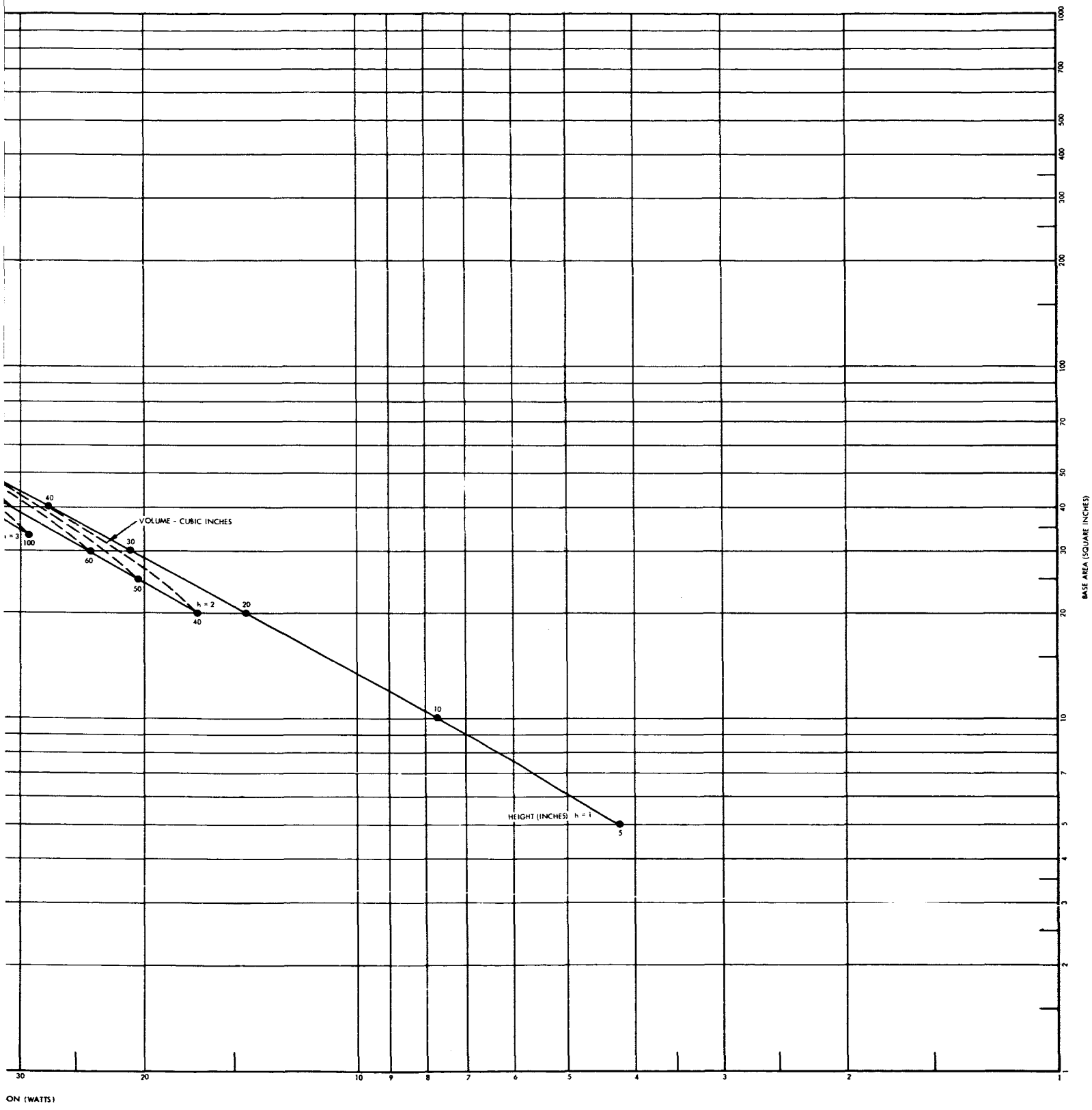

Figure 3-13. Structure—Thermal Optimization—K = 5

The maximum weight curves on Figures 3-9, 3-10, and 3-11 were corrected, using Figures 3-12 and 3-13, to a minimum volume, minimum weight design consistent with the required heat dissipation. The irregularly dashed curves represent these optimum weights. The amount of heat dissipated for each converter design as a function of output power and frequency was obtained from the efficiency curves presented in Figures 3-14, 3-15, and 3-16. The basic efficiency and weight data given by these parametric curves were assembled using the previous equations.

3.6 ANALYSIS OF PARAMETRIC DATA AND CONCLUSIONS

3.6.1 Efficiency

The efficiency data for the three converter circuits, shown in Figures 3-14, 3-15, and 3-16 when compared at equal power levels and frequency, show that the ES converter type circuit is superior and the PWI converter circuit is second. Comparison of the RSWI converter (third best) efficiency data with that presented in the Second Quarterly Report shows that at low power levels the new data provides significantly higher efficiencies. At the higher power levels the RSWI data provides lower efficiencies than the old data. However, both the PWI and ES type circuits provide comparable values.

3.6.2 Weight

A general comparison of the three converter type weights indicate the following order of preference for lightest weight: PWI, ES, and RSWI. A detailed analysis of the curves presented in Figures 3-9, 3-10, and 3-11 show that at several values of output power and/or frequency the curves cross over; due to the change in components occurring at different frequency crossover points. Other crossover points occur when the weights are established by the thermal considerations; due to the dominant efficiency preference between the ES and PWI circuits. Considering minimum weight converter designs only, the following choices shown in Table 3-1 are obtained from Figure 3-9, 3-10, and 3-11.

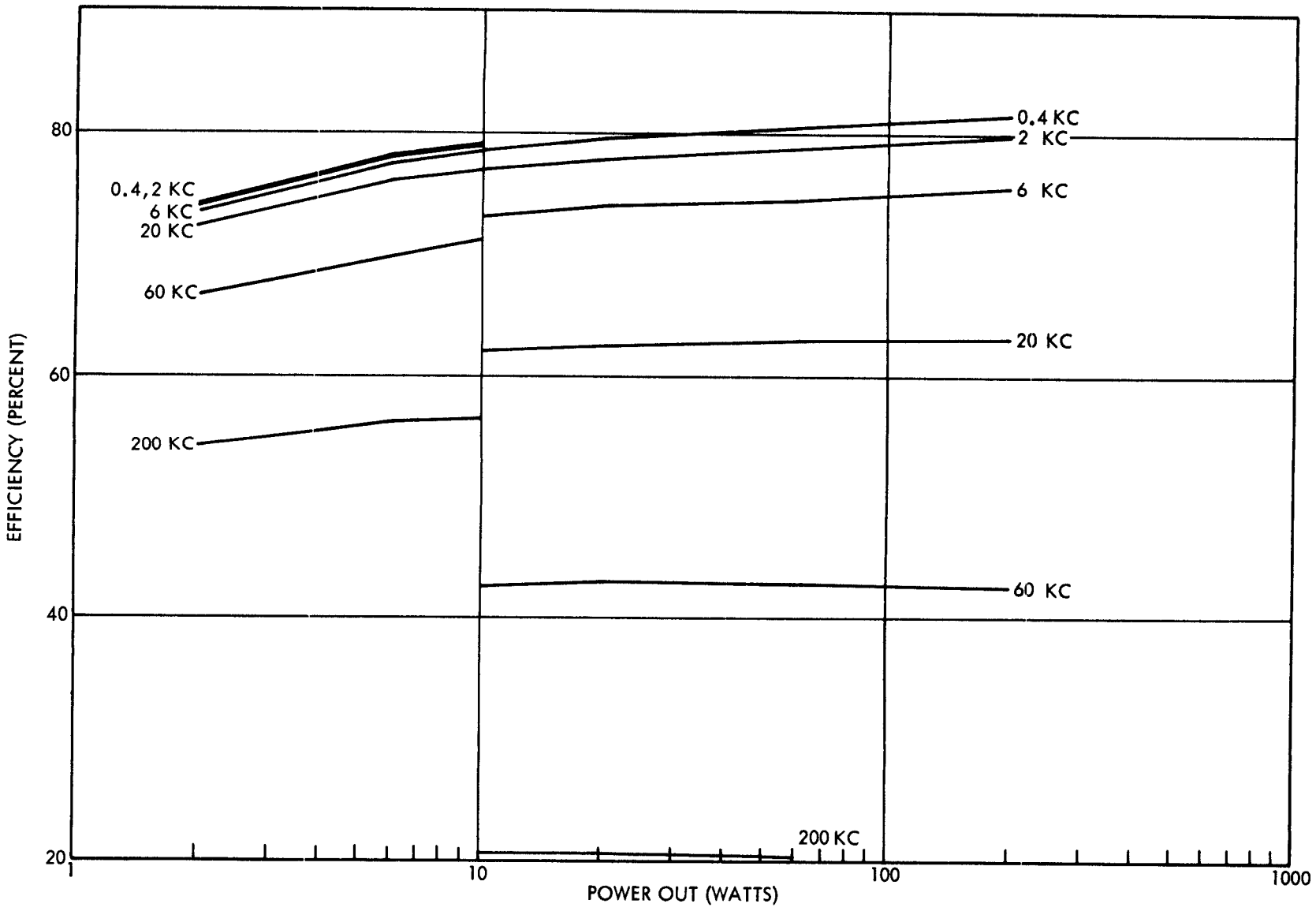

Figure 3-14. RSWI Converter, Efficiency Versus Power Output

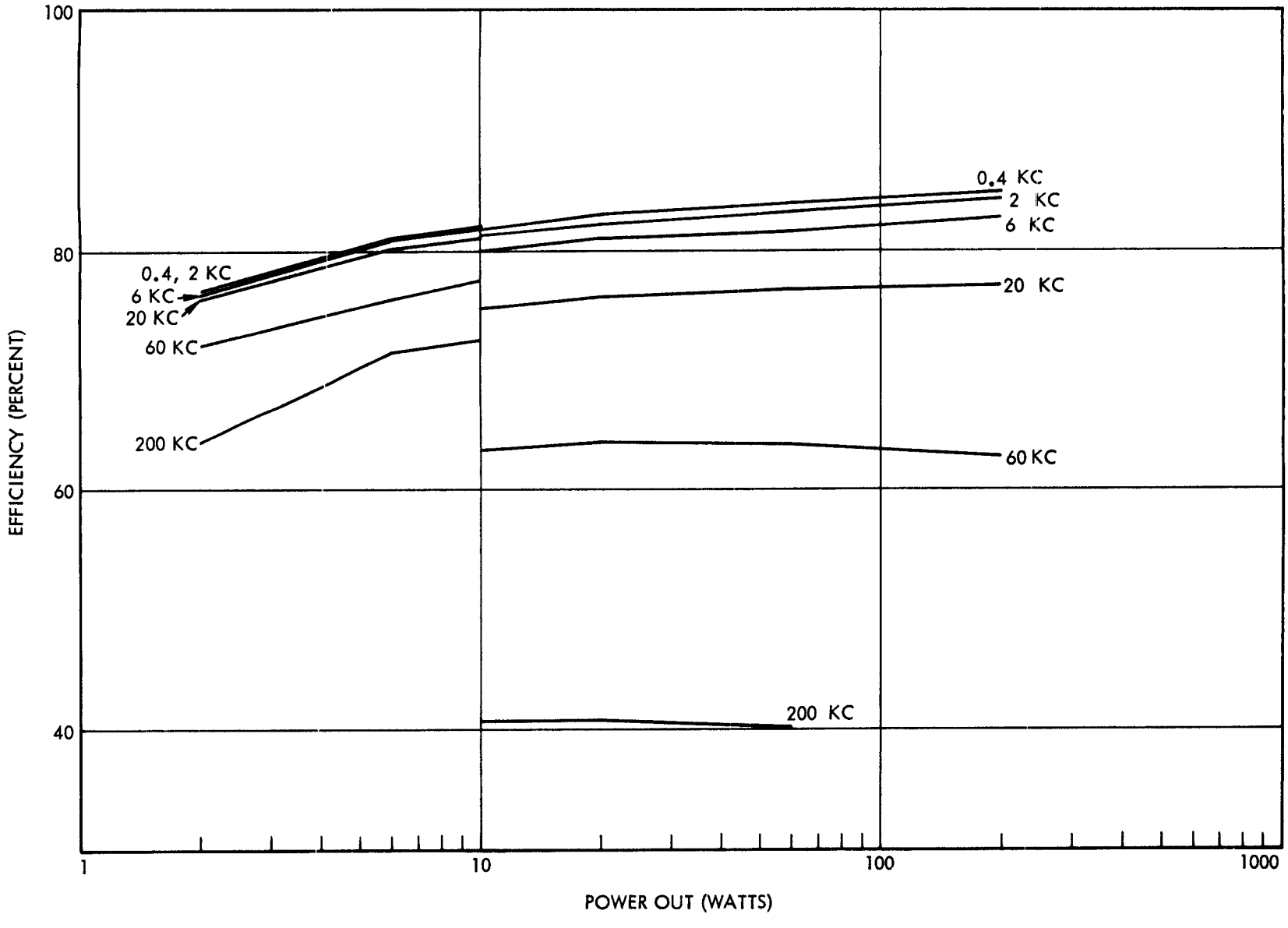

Figure 3-15. PWI Converter, Efficiency Versus Power Output

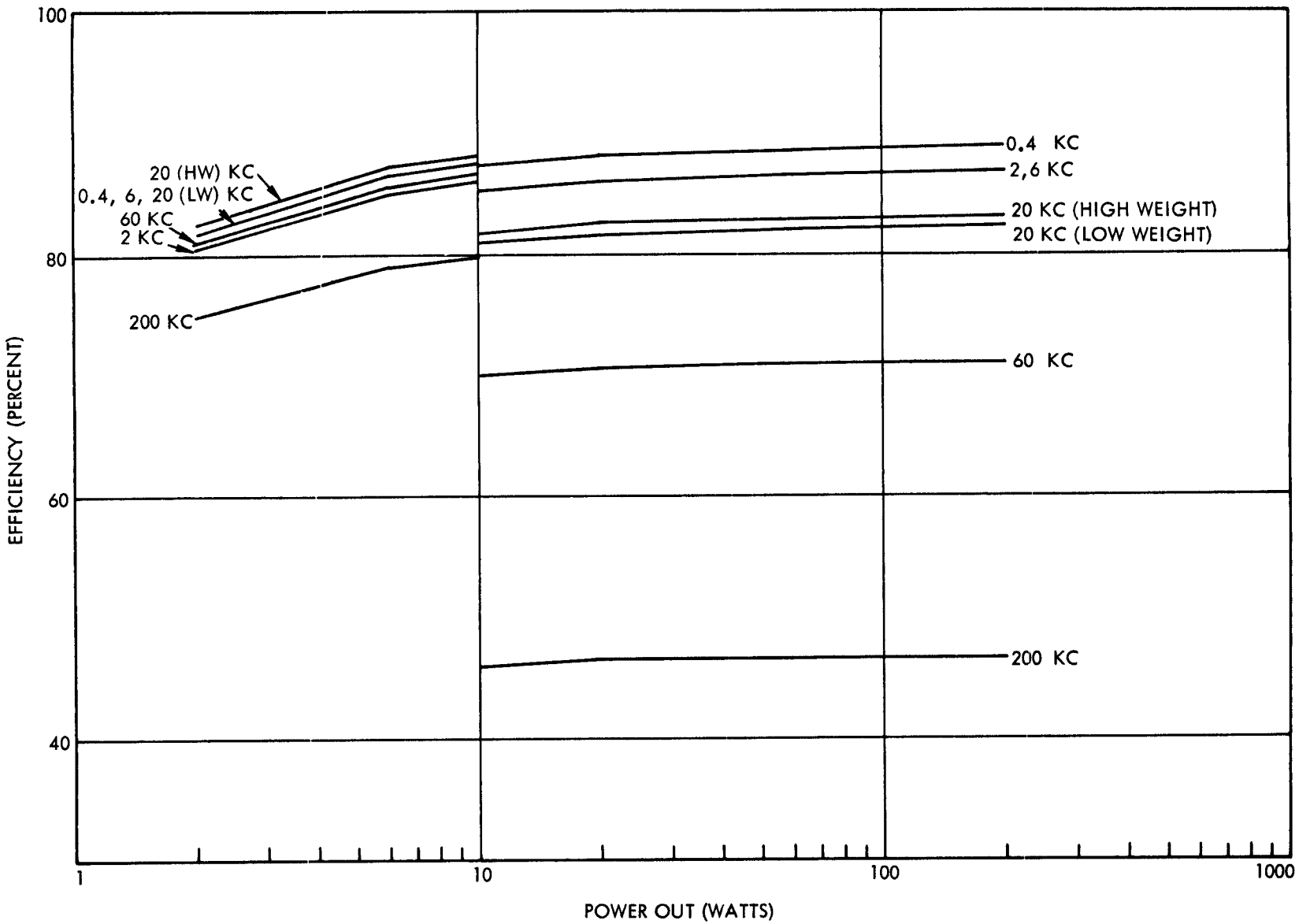

Figure 3-16. ES Converter, Efficiency Versus Power Output

Table 3-1. Minimum Weight Converter Selection

Power (watt)	Circuit Type	Frequency (kc)
≤ 10	ES	200
10 to 25	PWI	60
25 to 100	ES	20

The ES converter circuit appears to have the best performance over the widest power range. Since it is significantly the higher efficiency circuit, another analysis of the basic circuit was conducted to determine if the weight could be reduced and especially at the lower power levels. The result was the ES Push-Pull converter circuit shown in Figure 3-17. This circuit performs with equally good efficiency and essentially reduces the weight of the input filter and output capacitor by 50 percent by doubling the duty cycle and therefore doubling their operating frequency. The resulting weight performance is presented in Figure 3-18. This new data changes the minimum weight converter design as shown in Table 3-2.

Table 3-2. Revised Minimum Weight Converter Selection

Power (watt)	Circuit Type	Frequency (kc)
≤ 10	ES	200
10 to 13	ES	20
13 to 25	PWI	60
25 to 200	ES	20

Although the PWI converter has a lower weight between 13 and 25 watt output the difference is very small and its efficiency is less than that of the ES push-pull converter by at least 17 percent. This large efficiency difference would increase the weight of the PWI converter system battery and solar arrar far more than the 0.15-pound maximum converter weight difference at 20 watt output. Therefore an ES or ES push-pull converter is recommended as the lightest weight and most efficient equipment.

Comparison of the new weight data to that presented in the Second Quarterly Report shows a minimum of 10 percent improvement. The most significant region of improvement is above the 5-watt output.

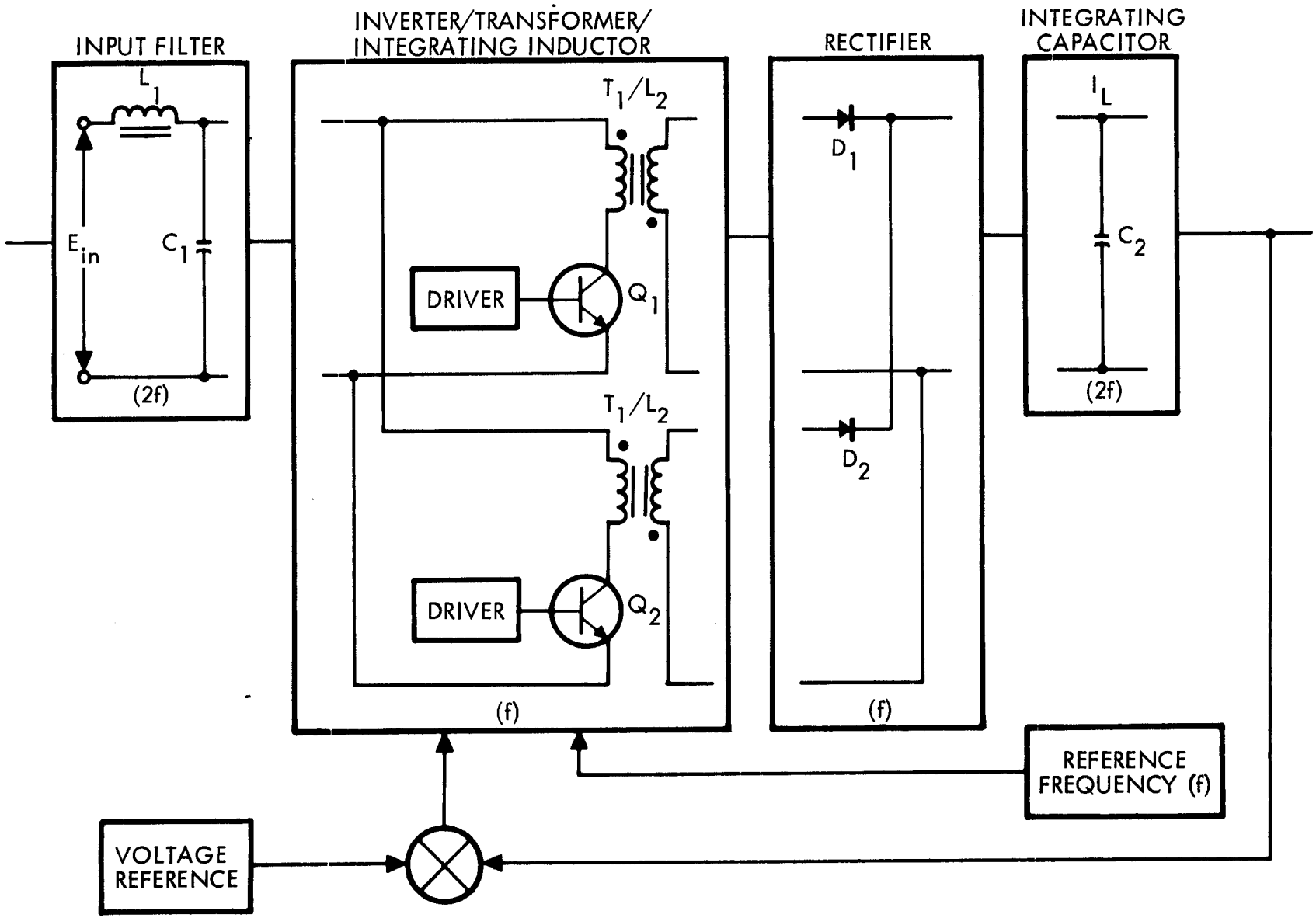

Figure 3-17. Block Diagram, ES Push-Pull Converter

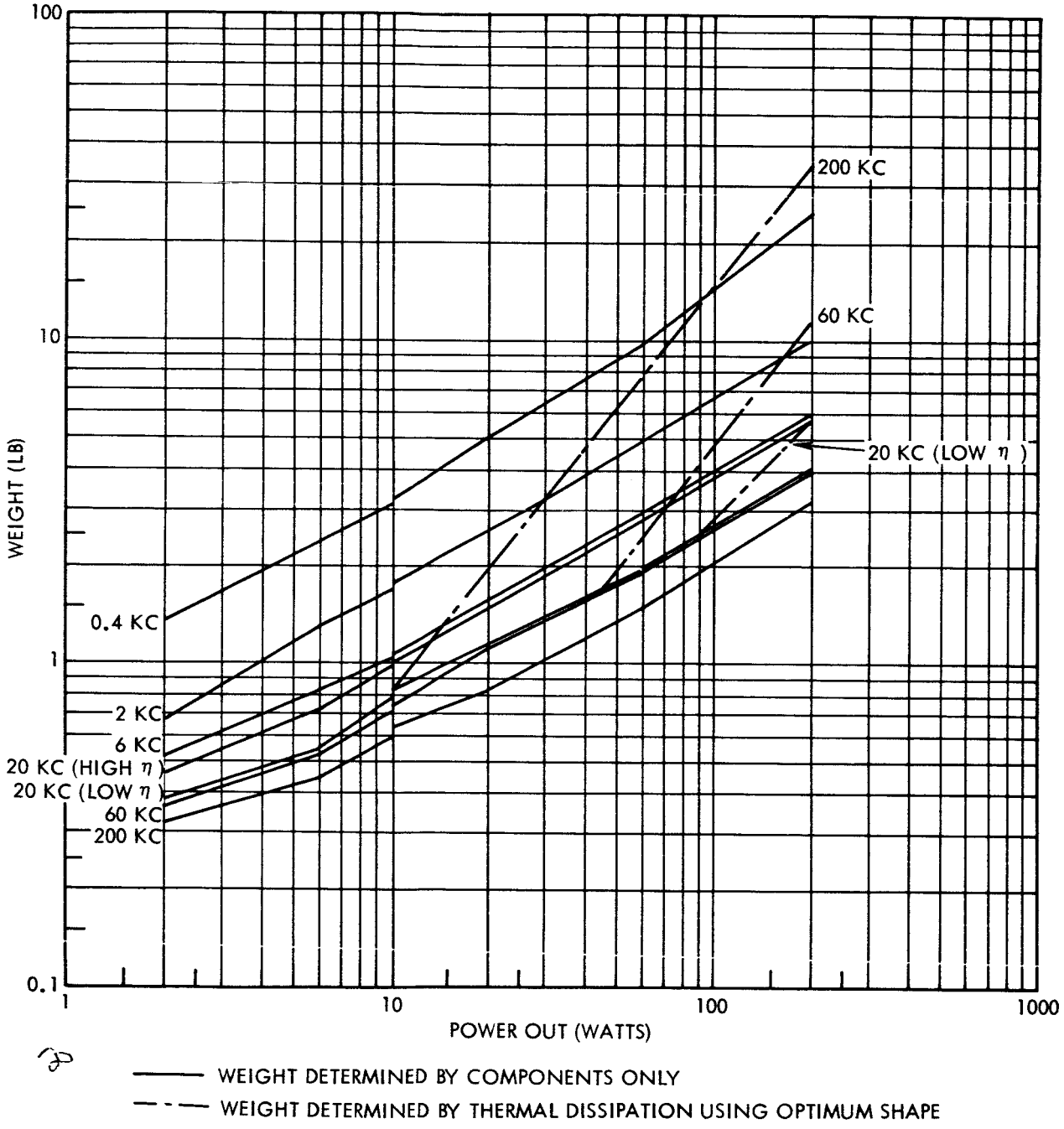

Figure 3-18. ES Push-Pull Converter Weight

APPENDIX A

ELECTRONIC EQUIPMENT THERMAL PACKAGING OPTIMIZATION

1. INTRODUCTION

Packaging of electronic equipment for use in spacecraft presents new challenges for the designer because of the many parameters requiring optimization. The following requirements are usually critical and thus provide a serious need for investigation, design analysis, and tradeoffs to determine the correct compromise which will provide the most optimum system design:

- Minimum weight
- Minimum volume
- Adequate heat transfer or insulation
- Adequate mechanical strength to meet environmental specifications
- Convenient shape.

The minimum volume is usually established by the type and quantity of components to be packaged. If the heat dissipation required is not excessive, this minimum volume will also set the minimum weight required to meet the mechanical requirements. When the heat dissipation is above normal, increases in weight and volume usually result. The following optimization procedure is one method of directly determining the minimum weight and volume design when excessive heat dissipation is present. Knowledge of component sizes and weights, minimum structural weight necessary to meet the mechanical environment, and required heat dissipation are prerequisites.

2. GEOMETRICAL SHAPES

The geometrical shape of an electronic equipment package is generally controlled by one or more of the following criteria:

- Quantity, size, and shape of components to be packaged
- Weight, maximum temperature, and heat dissipation of components to be packaged

- Size, shape, and configuration of spacecraft in which equipment package is to be mounted
- Heat transfer characteristics, ambient temperature, and thermal environment of the spacecraft.

The more common shapes in use are the sphere, right circular cyclinder, the rectangular parallepiped. Each of these are briefly considered, with the rectangular parallepiped shape selected as the basis of the optimization procedure. A similar procedure would be applicable to other geometrical shapes.

The minimum surface area per unit volume for each of the above shapes is:

$$\text{Sphere } \frac{\text{area}}{\text{volume}} = \frac{3}{r_s} \qquad r_s = \text{radius}$$

$$\text{Cylinder } \frac{\text{area}}{\text{volume}} = \frac{4}{r_c} \qquad \text{height } h_c = \text{radius } r_c$$

$$\text{Rectangular } \frac{\text{area}}{\text{volume}} = \frac{6}{\ell_r}, \quad w_r = h_r = \ell_r \quad \text{(width, height, length)}$$

When these ratios are reduced to a common dimension, such as ℓ_r of the cube, their relative magnitudes are:

$$\text{Sphere } \frac{\text{area}}{\text{volume}} = \frac{4.8375}{\ell_r}$$

$$\text{Cylinder } \frac{\text{area}}{\text{volume}} = \frac{5.8584}{\ell_r}$$

$$\text{Rectangular } \frac{\text{area}}{\text{volume}} = \frac{6}{\ell_r}$$

The rectangular parallepiped was chosen because it has the largest surface area per unit volume and is a convenient shape for packaging electronic components. The right circular cylinder may be more optimum for special cases since its base area is larger than the cube base area by a factor of 1.4646 for equal minimum volumes.

3. RECTANGULAR PARALLEPIPED PACKAGING OPTIMIZATION

3.1 Design Considerations

An electronic equipment package operating in a spacecraft in space has two means of transferring its waste heat to the external environment. Radiation to the surrounding equipment, spacecraft, and space usually accounts for 50 percent or less of the total heat transfer. Conduction to the mounting base or spacecraft heat sink is the predominate mode of heat transfer and may account for 50 percent or more of the total. The rate of heat transfer by conduction generally exceeds the radiation rate by a factor of 5 or more. When this is true, maximizing the mounting base area per unit volume will maximize the total heat transfer. Since the cube has the minimum surface area per unit volume of any rectangular parallepiped, and if it is assumed that the height should not exceed either the length or width of the base, then the base area can be increased per unit volume in two ways. First, the height, h, can be reduced and the square base area increased proportionately until the minimum allowable height, established by the largest component dimensions, is reached. Second, this minimum height can be held constant and the length, ℓ, to width, w, ratio ($K = \ell/w$) increased from 1, until a maximum allowable K factor is reached. This final shape, having minimum height and maximum K factor, provides the maximum heat transfer for a given volume whenever the base conduction rate is equal to or greater than the radiation rate. A reasonable maximum K factor is approximately 5.

An electronic equipment circuit design establishes the type, size, weight and quantity of components to be packaged. Also, the heat dissipation and temperature limit requirements can be calculated. The component information provides the minimum volume and weight, as well as limiting dimensions, such as the minimum height. Consideration of the mechanical environmental specifications further defines the minimum structure weight and packing factor. Data on this basic design can then be used to determine if sufficient surface area is available to transfer the required amount of heat. Determination of this fact is difficult because of the many variables involved. If it is determined that the surface area is insufficient, changing the basic package design to satisfy the thermal requirements and minimizing the associated penalties presents further problems.

The following assumptions and optimization method were derived to provide a rapid, simple, graphical method for solving these two problems.

3.2 Assumptions

The minimum volume and weight established by the mechanical design can easily be checked for thermal adequacy by considering the volume in the shape of a cube. If the surface area of the cube can transfer the required heat, then any other rectangular shape is more than adequate. The following heat transfer and configuration constraints were assumed:

- Heat is transferred away from the equipment package by conduction and radiation only, due to the vacuum environment
- The spacecraft average ambient temperature is $50^{\circ}C$
- The average equipment temperature rise is limited to $20^{\circ}C$ with an emissivity of 0.9
- The average heat conduction rate to the mounting base is 0.5 watts per square inch of base area
- The average heat radiation rate is 0.1 watts per square inch of surface area
- The average equipment density is between 0.035 and 0.05 lb per cubic inch
- The K factor (ratio of base length to width) ranges from 1 to 5
- The height, h, is always equal to or less than the width.

3.3 Optimization Method Derivation

The mechanical and circuit designs provide the following parameter values:

- Minimum volume
- Minimum weight
- Minimum permissible dimensions
- Maximum heat dissipation.

Equation (1) relates three of these parameters for a rectangular parallepiped within the constraints and assumptions previously listed.

$$P_T = C_1 A_B + C_2 \left[2h(w + \ell) + A_B\right]$$

$$P_T = 0.5\, A_B + 0.2\, h\ell \frac{(K + 1)}{K} + 0.1\, A_B \qquad (1)$$

$$P_T = 0.6\, A_B + 0.2\, h\ell \frac{(K + 1)}{K}$$

where

P_T = maximum heat dissipation, watt

C_1 = heat conduction coefficient, watt/sq in.

C_2 = heat radiation coefficient, watt/sq in.

h = height of rectangular parallepiped, in.

w = width of rectangular parallepiped, in.

ℓ = length of rectangular parallepiped, in.

A_B = $w\ell$ = area of the base, sq in.

K = ℓ/w = length-to-width ratio

The minimum volume and minimum weight are related by equipment density coefficient as given by Equation (2).

$$V_{min} = \frac{W_{min}}{C_3} \qquad (2)$$

where

V_{min} = $w\ell h = \ell^2 h/K = A_B h$, cu in.

W_{min} = minimum equipment weight, lb

C_3 = average equipment density, lb/cu in.

Figures 3-12 and 3-13 present Equation (1) as functions of P_T, A_B, h, and K. Figures 3-12 and 3-13 hold K = 1 and K = 5 constant, respectively. Constant volume lines are shown for selected values of A_B and h.

3.4 Graphical Solutions

The mechanically limited minimum volume for a given electronic equipment is determined from Equation (2). Knowing the maximum heat dissipation, minimum volume, and limiting dimensions, the following steps can be used to determine the optimum minimum volume and shape for a thermally limited design.

Step 1.

Enter Figure 3-12 at the intersection of the known values of P_T and V_{min}.

Read the value of h at this intersection point, i.e., $h = h_1$.

If h_1 is equal to or greater than h_{min}, the mechanically limited V_{min} is thermally acceptable. Any rectangular parallepiped having a height equal to or less than h_1 and volume equal to V_{min} will meet or exceed the required thermal dissipation.

Step 2.

If h_1 is less than h_{min}, enter Figure 3-13 (K = 5) for the same values of P_T and V_{min}. At this point of intersection read the value of h, i.e., $h = h_2$.

If h_2 is equal to h_{min}, read the corresponding value of A_B at that intersection point. The optimum mechanical and thermal design is a rectangular parallepiped having a height equal to h_2, a base area equal to A_B, a length ℓ equal to

$$(K\ A_B)^{1/2}$$

with K = 5. This design has the same minimum volume and weight determined by the mechanical requirements.

Step 3.

If h_2 is greater than h_{min}, the minimum volume and weight determined by the mechanical requirements are adequate. The lowest acceptable value of K can be determined when h is set equal to h_{min}. K_{min} could be determined graphically if other figures similar to Figure 3-12 where plotted for values of K between 1 and 5. K would equal K_{min} on that figure which contained an intersection for $V = V_{min}$, P_T, $h = h_{min}$, and $A_B = V_{min}/h_{min}$. An analytical solution is available by solving Equation (1) for K, knowing $h = h_{min}$, $A_B = V_{min}/h_{min}$.

Equation (3) provides the solution of Equation (1) for the correct value of K.

$$K = \frac{(y^2 - 2) + y(y^2 - 4)^{1/2}}{2} \tag{3}$$

where

$$y = \frac{K + 1}{K^{1/2}} = \frac{P_T - 0.6\ A_B}{0.2\ h\ A_B}$$

Step 4.

If h_2 is less than h_{min}, the mechanically established minimum volume and weight are not thermally acceptable, and the volume and weight must be increased. The optimum volume, weight, and shape meeting the thermal and mechanical requirements are established by the optimum value of A_B on Figure 3-13 where the given value of P_T and $h = h_{min}$ intersect. The optimum length (ℓ) is equal to (K x optimum $A_B)^{1/2}$, i. e.,

$$\ell = \left[5\ (A_B)_{opt}\right]^{1/2}$$

The optimum weight is determined by Equation (4).

$$W_{opt} = \frac{h_{min}\ (A_B)_{opt}}{C_3} = \frac{V_{opt}}{C_3} \tag{4}$$

The above steps provide the exact solution for the required minimum weight and volume design of a rectangular parallepiped meeting both the mechanical and thermal requirements. Similar curves can be plotted for other geometrical shapes and/or assumed thermal coefficients.