SEMI-ANNUAL REPORT

TO

THE NATIONAL AERONAUTICS AND SPACE ADMINISTRATION

for the Period

January 1 to June 30, 1965

by

T. H. Curry

RESEARCH GRANT NO. NsG-338

UNIVERSITY OF MAINE

ORONO, MAINE

FACILITY FORM 602

N66 80036
(ACCESSION NUMBER)

30
(PAGES)

CR 67622
(NASA CR OR TMX OR AD NUMBER)

(THRU)

None
(CODE)

(CATEGORY)

ABSTRACT

This report summarizes research and other scholarly activity at the University of Maine under Grant No. NsG-338 for the period January 1 to June 30, 1965.

INTRODUCTION

The University of Maine received an Institutional Research Grant (NASA No. NsG-338) in October, 1962, for "Interdisciplinary Studies in Space-Related Science and Technology." Supplemental grants were made to the University in 1963 and 1964.

This grant has been of much assistance to the University in contributing to a scholarly environment, in developing the research capability of the faculty, in strengthening graduate education and in encouraging interdepartmental and interdisciplinary research activity. Grant funds have enabled several young faculty to initiate research programs at a crucial period in their careers.

Particular efforts have been made to extend participation in grant funds to additional eligible areas of the University, especially in life sciences and social sciences.

One project of much potential importance is designed to bring to the campus distinguished scientists and others active in the national space effort. This program hopefully will both inspire and assist the University's space researchers.

Graduate education has assumed greater significance at Maine in recent years. An indication of this is the increase in the number of full time resident graduate students:

Year	Number
1962-63	180
1963-64	250
1964-65	300
1965-66	400 estimated

Funds from the National Aeronautics and Space Administration have played an important role in this growth.

ADMINISTRATION OF THE GRANT

Grant funds have continued to be administered by the University's Space Research Committee, a faculty-administrative group appointed for this specific purpose. In addition to this function, the Committee has responsibility for preparing proposals to NASA (as related to NsG-338) and for acting in a liaison capacity with the University faculty.

The Committee membership includes the following:

Dr. Ralph E. Armington, Professor and Head of the Department of Electrical Engineering

Dr. Thomas H. Curry, Dean of the College of Technology and Chairman of the Space Research Committee

Dr. George F. Dow, Director of the Agricultural Experiment Station

Dr. Franklin P. Eggert, Dean of Graduate Study, Director of Research and Professor of Horticulture

Professor Richard C. Hill, Professor of Mechanical Engineering, Associate Director of the Department of Industrial Cooperation and Director of the Technology Honors Program

Dr. Edward S. Northam, Associate Professor of Mathematics

Dr. H. Austin Peck, Vice President for Academic Affairs and Professor of Business and Economics

Dr. Bruce R. Poulton, Professor and Head of the Department of Animal Sciences

Dr. George A. Prescott, Associate Professor of Education

Dr. Frederick H. Radke, Professor and Head of the Department of Biochemistry

Dr. Arnold H. Raphaelson, Associate Professor of Business and Economics

Dr. Benjamin R. Speicher, Professor of Zoology

The broad objectives set forth in the original grant proposal continue to summarize very well the activities supported through the Space Committee, that is:

1. The stimulation of research related to space science and technology, and
2. The enhancement of graduate education through research participation by graduate students.

AWARDS MADE BY SPACE RESEARCH COMMITTEE

The investigations supported to this time by NsG-338 funds are as follows:

Title	Investigator(s)	Amount	Department(s)
* Fluid Control Devices	Dr. R. A. Comparin	$ 4,135	Mechanical Engineering
* The Impact of the Space Program on the Rubber Industry	Dr. J. D. Coupe	2,390	Business and Economics
The Application of Modern Communication Theory Techniques to the Analysis of Electrocardiographic Functions	Dr. E. M. Sheppard	12,762	Electrical Engineering

Title	Investigator(s)	Amount	Department(s)
* Effect of Stress Induced by Fatigue and Monotony on the Formation of Tissue Lipid from Dietary Protein	Dr. F. H. Radke Dr. H. DeHaas	$ 1,600	Biochemistry
* The Impact of a Space Facility on a Small Community. A Case Study of Andover, Maine	Prof. S. Hyatt	2,900	Agricultural Business and Economics
Effect of Increasing the CO_2 Tension of Inspired Air on Nutrient Intake and Digestability	Dr. W. H. Hoover Dr. B. R. Poulton	6,400	Animal Sciences
* Study of Factors Affecting the Efficiency of Air Purification System for Removal of Noxious Gases from Spacecraft Cabins	Dr. S. A. Zieminski	3,850	Chemical Engineering
An Investigation of the Point Defects of CaF_2 and BaF_2 Due to Rare Earth Ions	Dr. D. W. Wylie	16,599	Physics
* A Preliminary Study of Sounds About and Within the Human Body	Prof. W. M. Libbey	800	Electrical Engineering
The Interrelations of Type of Atmosphere, Carbon Dioxide Concentration and Chemical Stimulation of the Photosynthetic Response in Green Plants	Dr. G. R. Cooper	11,010	Botany and Plant Pathology
Variations in Biochemical Properties of a Photosynthetic Protist as a Function of Environmental Conditions in Chemostat Cultures	Dr. J. R. Cook	8,580	Zoology
Design and Study of a New Apparatus for the Determination of Second Virial Coefficients of Organic Vapors	Dr. R. D. Dunlap	7,427	Chemistry
Non-Linear Characteristics of the Interaction of Microwaves with an Electrodeless Discharge	Dr. G. S. Harmon	12,220	Physics
Discontinuous Rate Compensation for Servo Systems	Prof. W. W. Turner	8,605	Electrical Engineering

Title	Investigator(s)	Amount	Department(s)
The Function of Abnormally Fragile Tissue Membranes in Fatigue-Induced Stress	Dr. J. A. Smith	$ 5,760	Biochemistry
A Force-Momentum Demonstration Apparatus	Prof. R. C. Hill Dr. G. T. Davis	1,250	Mechanical Engineering and Education
Study of Interface Phenomena in Filament Wound Glass Reinforced Plastic Composites	Prof. C. A. Bouc	6,413	Engineering Graphics
A Study of Digestibility of Plant Tissue in Animals and the Effect of Stress on the Metabolism of Plant Tissue Culture	Dr. A. R. Whitehill Dr. F. H. Bird	4,500	Bacteriology
* Mechanism of Acid-Catalyzed Alkylation of Aromatic Hydrocarbons	Dr. J. L. Wolfhagen	3,085	Chemistry
Solid State Amplifier for Measuring Cardiac Potentials	Prof. H. T. MacFarland	3,903	Electrical Engineering
Effect of Metabolic Rate and Loading on Temperature Regulation and Survival in a Highly Conductive Atmosphere	Dr. C. W. Major	9,500	Zoology
University of Maine Space Science Lecture and Consultation Series	Dr. B. R. Poulton, Chairman	3,000	General University
A Bio-Engineering Study of the Effects of CO_2 Stress on the Physiology and Nutrition of Animals	Dr. W. H. Hoover Dr. E. M. Sheppard Dr. B. R. Poulton Prof. C. M. Brown	17,965	Animal Sciences and Electrical Engineering
The Dimensionality and Cognitive Demands of Certain Science and Mathematic Problems and Their Relationships to Convergent and Divergent Thinking Tasks and Anxiety	Dr. Fred Ohnmacht Dr. G. T. Davis Dr. John Lindlof	7,300	Education
A Study of Attitudes Concerning Death	Dr. G. M. Vernon	3,700	Sociology
A Tunnel-Diode Transmitter for the Measurement of Gastric Acidity	Prof. H. T. MacFarland	3,903	Electrical Engineering

Title	Investigator(s)	Amount	Department(s)
Classical Eyelid Conditioning in Rats: Bioelectric Correlates	Dr. H. C. Ebel	$ 8,191	Psychology
Concerning Strictly Singular Operators	Dr. R. B. Mericle	3,936	Mathematics
Investigation of Parameters Fundamental to Optimization of Drag Turbines	Dr. W. L. Schneider Prof. J. G. Klavuhn	8,224	Mechanical Engineering
The Effect of Repeated Rolling Contact Stress Fields on the Microstructure of High Carbon Medium Hardness Steel	Prof. John Lyman	4,311	Mechanical Engineering

* Grant Essentially Terminated

REPORT OF ACTIVITY FOR PERIOD JANUARY 1 TO JUNE 30, 1965

This information is summarized for each project in the appendix of this report.

For the Space Research Committee

T. H. Curry, Chairman

APPENDIX I

The material in this section concerns only the projects supported under Grant No. NsG-338 which have been active during the period covered by this report, January 1 to June 30, 1965. As indicated previously in the list of projects, a number of them terminated prior to this period.

In each of the following cases the gist of the proposal is presented followed by a brief summary of the progress made.

"THE STUDY OF CARDIOGRAPHIC FUNCTIONS" - Dr. E. M. Sheppard

Proposal

An earlier project on "The Application of Modern Communication Theory Techniques to the Analysis of Electrocardiographic Functions" led to the present study. The objective of the former was to develop techniques for the analysis of cardiac functions, particularly the apex cardiogram and the carotid tracings. The desired results were the frequency spectra of the two functions and the transfer function, a graphical indication of the physical condition of segments of the cardiovascular system.

Results

The investigation of the cardiovascular transfer function is nearly completed.

This spring the project branched out in two additional directions. The first is a study of transducers for the measurement of cardiovascular pressures. Before making a comparison of types of transducers to determine which ones best convey the true conditions in an artery located near the surface of the skin, it is necessary to determine the transfer function relating to skin displacement, or skin pressure, to the pressure within an artery. A study has been

made of various mathematical models for cardiovascular systems; this is expected to lead to the development of the desired transfer function.

The second new study (being conducted in cooperation with the Animal Sciences faculty) is concerned with the instrumentation of sheep, currently to measure heart and respiration rates in response to CO_2 stress of the animal. The foremost problems have been associated with bioelectrodes and signal amplification. Questions concerning electrode material, electrode-tissue contact, optimum electrode placement, and integrity of electrode-skin contact for long term monitoring have been resolved.

"EFFECT OF INCREASING THE CO_2 TENSION OF INSPIRED AIR ON NUTRIENT INTAKE AND DIGESTIBILITY" - Dr. W. H. Hoover and Dr. B. R. Poulton

Proposal

Research with changes in carbon dioxide levels has shown it to elicit psychological responses such as excitation and depression and to have physiological activity in such areas as respiration rate, circulation rate, acid-base balance and unconsciousness. There is a dearth of information on the possible effects of increased level of CO_2 on the intake and utilizations of nutrients.

Results

Analysis of the digestibility of the feed is still in progress and will be available for the next semi-annual report. Observations of the responses to high levels of CO_2 during these trials indicated the need for further investigation. These observations included: 1. The possible adaptation to high levels of CO_2 (12 to 16%) was indicated if the CO_2 level was increased gradually rather than abruptly. 2. High levels of CO_2 caused hyperventilation and decreased alertness. 3. The tissue damage of one animal which expired at the

16% CO_2 level. This damage included massive hemorrhages in the heart, lungs and kidney. The lungs also exhibited edema and emphysema.

This project has led to a proposal, "A Bio-Engineering Study of the Effects of CO_2 Stress on the Physiology and Nutrition of Animals," which is currently being considered by NASA. Work is being pursued as a new effort involving faculty from both Animal Sciences and Electrical Engineering, with assistance from the Animal Pathology Department.

"AN INVESTIGATION OF THE EFFECTS OF RADIATION ON BaF_2:Gd AND SrF_2:Gd USING THE ELECTRON SPIN-RESONANCE (ESR) TECHNIQUE" - Dr. D. W. Wylie

Proposal

The purpose of this investigation is to determine the effects of ionizing radiation on single crystals of BaF_2:Gd. Since these crystals have laser properties, a study of the crystalline electric field is of interest and in particular the effects of ionizing radiation on crystals is of interest if these materials are developed to the point of being used in the space program. Also, there is still a controversy associated with the charge compensation effects when Ga^{+++} is substituted for Ba^{++} and Sr^{++}. By changing the ionization state of the Ga^{+++} some insight should be gained into which charge compensation effects are prevalent.

A third element of interest is the possibility of producing atomic displacements with ionizing radiation. This has been detected in other crystals. On the simple physical picture of a direct collision between a photon and an atom, this effect is impossible. However, by taking into account the effects of the crystalline electric field it is possible to predict such an effect. If atomic displacements take place in these crystals, then we should have an alternate method of examining the crystalline electric field.

Results

Portions of the ESR spectrometer have been modified to improve its capabilities.

New data on BaF_2:Gd have been obtained and are more complex than has been reported in the literature. Some of our spectra agree with the published data. The remainder of the data are currently being analyzed using the 1620 computer program written last year. As far as we can determine our spectra are due to a paramagnetic defect not reported in the literature. The data have not yet been sufficiently analyzed to publish or to state definitely the nature of the defect causing the spectra. The technique of aligning the crystals in the cavity has been perfected such that data from two crystals is now reproducible. A third crystal (BaF_2:Gd) precisely cut along certain directions was purchased from the original supplier. The spectra obtained along one of these directions does not agree with the data from the other two crystals.

One of the early BaF_2:Gd crystals was exposed to 100 mr or 30 kv x-rays. The spectrum originally present was not changed; however, a new spectrum was observed. The analysis of this new spectrum is continuing.

In passing, it is interesting to make an example of the spin-off effect of NASA support on the educational activity at the University. The following came to the attention of the writer of this report:

SIGMA PI SIGMA ANNOUNCEMENT

> Next Wednesday evening there will be a meeting at 7:00 to elect members and associates. This meeting will be held in Rm. 140 of the Physics Building, and dues will be payable to Gordon Whitten, Treasurer, at that time.
>
> Then, at 7:30 Dr. Douglas Wylie of the Physics Department will deliver a lecture on electron spin resonance. Dr. Wylie intends to discuss how the technique of electron spin resonance can be used to detect the effect of radiation on solids. (This lecture should be of special interest to Engineering Physics Juniors who will be conducting an ESR experiment this year.) All are welcome to attend the open meeting starting at 7:30.

"THE INTERRELATIONS OF TYPE OF ATMOSPHERE CARBON DIOXIDE CONCENTRATION AND CHEMICAL STIMULATION OF THE PHOTOSYNTHETIC RESPONSE IN GREEN PLANTS" -

Dr. G. R. Cooper

Proposal

The original project with the above title has led to a new investigation, "The Response of Green Plants to Artificial Gravity as Stimulated by Electrostatic Fields and Applied Potentials."

The problem of weightlessness has been shown to be a serious one in space. This project would attempt to establish an artificial polarity of transport and development within the plant which would produce normal plant responses under weightless conditions. Electrical fields, magnetic fields and electrical potentials will be applied singly or in combination to suitable plants and perhaps later to animals.

Results

Preliminary work was carried on in greenhouse and environmental control chambers to determine the effect of DC current applied to potato, tomato, and coleus plants. In every case rather striking symptoms appeared on the plants. These consisted of a series of narrow dark rings, one above another, in the internodal regions of the stems. These rings occurred only between the two electrodes, and electrodes applied in a like fashion but with no current applied gave no symptoms of any kind. Coleus responded faster than tomato or potato. In one instance it was possible to create horizontal growth of a potato stem.

An extensive review of the literature has also been made. Apparently no research has been directed at the actual creation of "artificial gravity" of this kind. However, much work, especially in Russia, tends to support the hypothesis that it may be possible to substitute an electrical potential, electrical field, or magnetic field for gravity.

A proposal is being prepared by the combined departments of Botany and Plant Pathology, Entomology, and Plant and Soil Sciences. There has already been informal discussion with NASA personnel in Washington and it appears that a formal proposal will be made to NASA sometime this fall - probably involving the biosatellite program.

"VARIATIONS IN BIOCHEMICAL PROPERTIES OF A PHOTOSYNTHETIC PROTIST AS A FUNCTION OF ENVIRONMENTAL CONDITIONS IN CHEMOSTAT CULTURES" - Dr. J. R. Cook

Proposal

This research deals with cell physiology. It is desired to relate long term growth and synthetic capacity of photosynthetic cells with their energy supply. Biochemical and physiological properties of *Euglena gracilis* will be determined in chemostat cultures after a sufficient number of generations have elapsed to allow stabilization of these properties. An initial objective of the study is to determine the energy level most effectively utilized by *Euglena*. Properties to be followed include total cell mass, protein, carbohydrate, nucleic acids, photosynthetic pigments, and respiratory and synthetic rates.

A longer range objective is to study the nature of the physiological change of *Euglena* in relation to abrupt change in energy level, that is, whether the change is straightforward or whether a transient metabolic behavior is elicited.

The research has direct applicability to space biology because of the possibility that the research may suggest a simple way of varying in known direction the ratios of important cellular constituents - lipids, carbohydrates and proteins.

Results

The research has been pursued as outlined above and has been fruitful. As

a result two manuscripts relating to aspects of the research have been submitted for publication. If accepted, copies of these will be included in a later report to NASA.

"DESIGN AND STUDY OF A NEW APPARATUS FOR THE DETERMINATION OF SECOND VIRIAL COEFFICIENTS OF ORGANIC VAPORS" - Dr. R. D. Dunlap

Proposal

Dr. Dunlap plans to construct an apparatus for determination of second virial coefficients of organic vapors and mixtures.

Second virial coefficients are important in study of intermolecular potential between molecules which is basic to understanding macroscopic properties of matter in the pure state and in mixtures. The proposed measurements will provide important design data for engineers.

Results

The apparatus has been used to determine second virial coefficients in an accurate simple way of n-butane, neopentane tetramethyl silane and an equimolar mixture of neopentane with tetramethyl silane between 25 and 75°C. Data obtained show excellent agreement with some of those in the literature. The investigator considers the new data to be very accurate and precise.

The device constructed under support from NASA has led to a new area of major research activity for Dr. Dunlap and his graduate students.

"NON-LINEAR CHARACTERISTICS OF THE INTERACTION OF MICROWAVES WITH AN ELECTRODELESS DISCHARGE" - Dr. G. S. Harmon

Proposal

It is the purpose of this work to conduct an experimental investigation of the interaction of microwaves with an electrodeless gaseous discharge, with

the particular object of obtaining a microwave amplification. There is some evidence that an electrodeless discharge, unlike other varieties, may be controlled adequately to be useful in confirmation of several aspects of plasma theory.

The research is pertinent to satellite communication and to properties of the ionosphere.

Results

Results of the above project have been reported previously. Based on these Dr. Harmon has undertaken a new investigation, "Electron Temperature Measurements for a Radio Frequency Discharge in a Magnetic Field."

The electron temperature of a plasma is one of several parameters which need to be known in order to predict the interaction of the plasma with its environment. Most plasmas of interest require the presence of an external magnetic field. The theory for the use of probes in a magnetic field to determine the electron temperature is not at all satisfactory. In this study the results of probe measurements are being tested. A knowledge of the validity of these measurements, for example in ion engines, would be useful.

Discharge tubes with probes of several shapes and orientations have been constructed, including a high power radio-frequency oscillator with which to excite the plasma. Electron temperature data are being taken, using the probes, as a function of magnetic field strength.

Simultaneously, apparatus is being set up to determine radiation temperature measurements for comparison with those of the probe. Hopefully the results will lead to an extension of the theory for the use of probes in a magnetic field for determination of electron temperature.

"DISCONTINUOUS RATE COMPENSATION OF SERVO SYSTEMS" - Professor W. W. Turner

Proposal

The project involves analysis of the effect of discontinous change in the amount of rate feedback on the performance of a tachometer stabilized servo system as the error magnitude, or the output velocity, approaches zero. It is thought that this type of a compensation scheme might lead to a different method of "optimalizing" a control system in the sense of using minimum fuel (or energy or time) to reach a specified terminal condition.

Results

Since the previous progress report dated 1/5/65 an effort has been made to compare the response of the discontinuous rate compensated system with the response of the "time optimum bang-bang" system in which maximum corrective action is applied at all times until the equilibrium condition is reached.

Figures 1 and 2 show the two systems under consideration. The assumption was made that the fixed plant is represented by $\frac{2}{(S+1)(S+2)}$ and is not subject to saturation.*

It is further assumed that amplifier K_1 saturates at an output value of ± 1.42 when the input is ± 1.

Application of Pontryagin's maximum principle indicates that for the system of Figure 1 the amplifier should be operated in the saturated region at all times (i.e., bang-bang control). Application of the same principle to the system of Figure 1 is difficult if bounds are placed both on the output of K_1 and the value of n. For this reason an analytical solution of the time optimal response for the system of Figure 2 was based on the assumption that

---

* In actual practice this will probably not be true but the assumption simplifies the analysis and thus is used for the initial study.

the only restriction was that n is bounded by ± 1. Results of this analysis indicated that n should initially be - 1 and then switch to + 1 at a time determined by the initial condition.

Theoretically it will take an infinite time for system 2 to recover from an initial disturbance. Comparison between the systems was, therefore, based on the time it takes for each system to recover to 5% of the initial disturbance. Data were obtained by analog simulation of the systems with the stated assumptions and also for the case where K_1 in system 2 saturates at the same value as in system 1. Results of the simulation studies are given below. Initial velocity in all cases is assumed to be zero.

	System 1		System 2			
			K_1 non-sat.		K_1 sat.	
Initial Value of C	time to 5%	max. velocity	time to 5%	max. velocity	time to 5%	max. velocity
0.5	0.32	2.47	0.52	1.63	0.53	1.38
1.0	0.47	3.35	0.52	3.40	0.53	2.90
1.5	0.57	3.95	0.52	5.50	0.53	4.40
2.0	0.66	4.40	0.52	6.60	0.53	5.90

These results indicate that there may be some advantage is using system 2 to control a given second order plant. Much more work must be done before general results are obtained.

Mr. Levesque will continue this work during the fall semester and will use results of his work as a basis for a Master's thesis.

During the period from April 1 through June 30 Mr. Levesque devoted one half time and Professor Turner devoted one quarter time to the project.

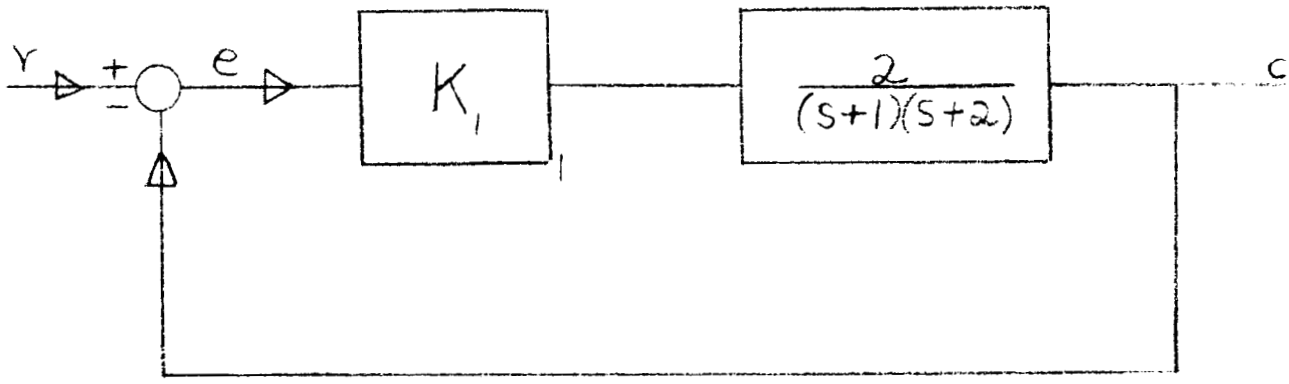

Figure 1. System of for comparison with that of Figure 2.

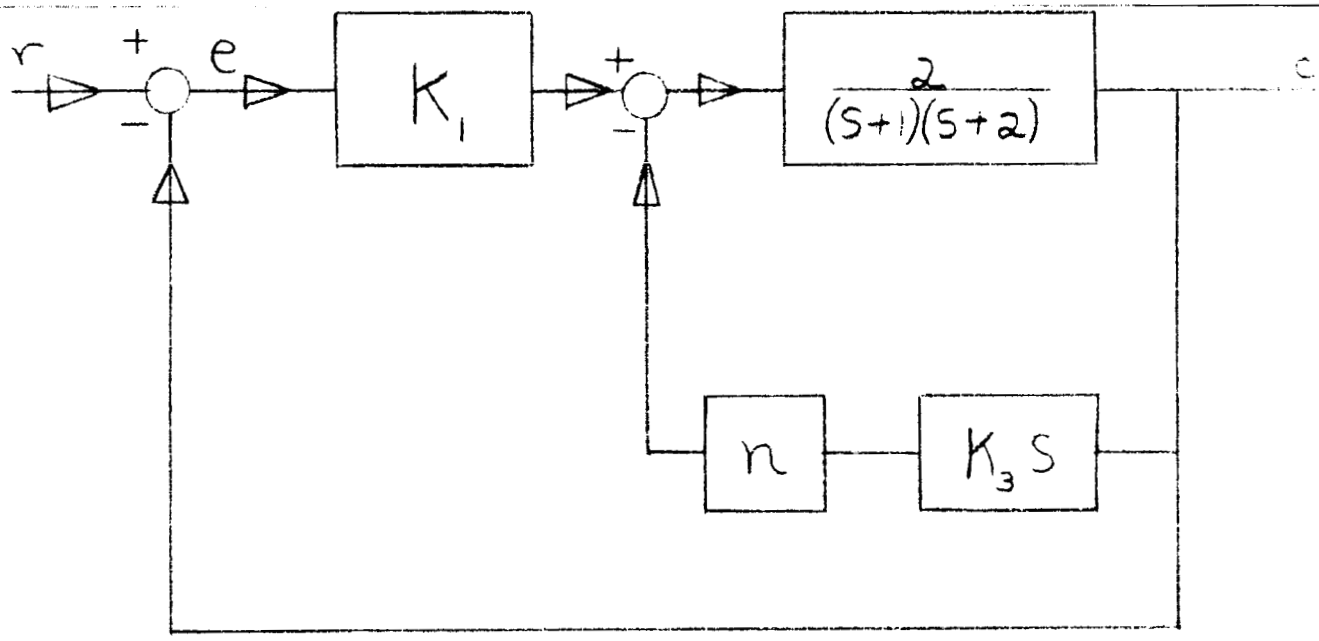

Figure 2. [illegible] discontinuous rate generation.

"THE FUNCTION OF ABNORMALLY FRAGILE TISSUE MEMBRANES IN FATIGUE-INDUCED STRESS" - Dr. J. A. Smith

Proposal

To determine the effect of stress on the function of excessively fragile membranes, rats will be maintained on a fat-deficient diet until the classical symptoms of a polyunsaturated fatty acid deficiency becomes evident. At this time they will be subjected to stress by being rotated in a smooth motor-driven drum up to the limit of their endurance. Animals subjected to the same stress but fed a complete diet will be used for comparison. The formation of tissue lipids and carbon dioxide from radioactive acetate will be measured as will the metabolic rate of liver preparations.

Results

Present data indicate that rats deficient in essential fatty acid (EFA) are unable to tolerate physical stress as well as rats which have received an adequate diet. Also the latter can endure a given level of stress for a longer period of time.

The metabolic rate of rats on an adequate diet, as indicated by CO_2 production, is similar after 48 hours of physical stress to the metabolic rate of unstressed EFA deficient rats.

Analysis of liver lipids suggests that EFA supplemented rats are more capable of mobilizing body fat during stress to meet their energy requirements than are EFA deficient rats.

In both the EFA deficient rats and those with normal diet, physical stress resulted in a pronounced decrease in the incorporation of radioactivity into the liver lipid without a corresponding increase in respiratory $C^{14}O_2$.

"A FORCE-MOMENTUM DEMONSTRATION APPARATUS" - Professor R. C. Hill and Dr. G. T. Davis

Proposal

Professor Hill, of the Mechanical Engineering Department, and Dr. Davis, mathematics and science specialist in the College of Education, propose to develop an inexpensive apparatus (complete with manual) which can be used by high school physics classes to study the variables associated with forces generated by fluid momentum change - as in rockets, aircraft, etc. By having students consider problems arising from changes in momentum where both solids as well as fluids are involved, the students can be better informed about the control of vehicles in space.

Present treatment of momentum-force relations associated with gas flow is inadequate in existing high school physics texts.

Results

The force-momentum apparatus has been used in many schools in the state. An Instruction Manual and an Analysis of Student Response are currently underway.

"STUDY OF INTERFACE PHENOMENA IN FILAMENT WOUND GLASS REINFORCED PLASTIC COMPOSITES" - Professor C. A. Bouc

Proposal

Glass filaments reinforced with a variety of resins are used as structural material in space, and other, technology. The tensile strength of the composites is much less than that of virgin glass filaments because of damage from partially unknown factors during manufacture. It is hoped that the research will contribute to increased strength of glass filament-resin composites.

Results

Failure by Professor Bouc to achieve satisfactory integrity between coatings of flexible resin and degreased glass filaments prior to incorporation into rigid resin matrix led him to work with other fibers, primarily quartz, which proved more amenable to the process.

Composites of quartz filaments sheathed with flexible resin and assembled in a matrix have been studied by photography under tension and following fracture. Observations under polarized light indicates that debonding between the resin and the quartz is very limited. The examination under polarized light also indicates undesirable stress concentrations at the nodes of the flexible resin sheath.

It is felt that the research to date supports the hypothesis that sheathing filaments with flexible resin alleviates debonding at the filament-resin matrix interface and that therefore the technique should improve the strength characteristics of fiber-resin composites, such as in those incorporating filament wound fiber glass.

"A STUDY OF DIGESTIBILITY OF PLANT TISSUE IN ANIMALS AND THE EFFECT OF STRESS ON THE METABOLISM OF PLANT TISSUE CULTURE" - Dr. A. R. Whitehill and Dr. F. H. Bird

Proposal

A study of the feasibility of using plant tissue culture as a complete or partial diet for animals will be studied. Plant tissue will be grown in an atmosphere of radioactive CO_2 to obtain labelled protein and carbohydrates. A study of the use of adjuvants to increase the digestibility and absorption of the tissue will be made. Secondly, the effects of several abnormal environmental factors on the basic metabolism of plant tissue culture will be determined.

Results

Most of the effort for this reporting period has been concerned with a study to determine the growth requirements of carrot cambium tissue in order that C^{14} can be incorporated into the protein in the most efficient manner.

Previously it had been shown that carrot cambium tissue could be grown successfully on a defined medium which contained only one amino acid (glycine), three vitamins (nicotinic acid, pyridoxine and thiamine) plus essential inorganic salts and sucrose. Subsequent data show that neither glycine, pyridoxine nor nicotinic acid are essential or stimulatory to the growth to the growth of the tissue.

Both the radioactive albumen previously prepared and the carrot cambium tissue will eventually be used in digestion and adsorption studies.

The principal investigators feel that tissue culture is one of the most recent and promising "tools" that is being developed to study biological processes. They expect, for example, that it will be of great value in later studies of the effect of extra-terrestrial conditions on plant life.

APPENDIX II

A number of awards were made this spring by the Space Research Committee. While a certain amount of planning and preliminary activity has ensued prior to June 30, the real work on the projects began this summer and will be discussed in the next semi-annual report.

The following are brief summaries of the proposals which were approved by the Committee.

"SOLID STATE AMPLIFIER FOR MEASURING CARDIAC POTENTIALS" - Professor H. T. MacFarland

Proposal

The need exists for a high input impedance, ultra stable, solid-state, input stage for the measurement of cardiac potentials. Such a unit would open the door to the development of a high definition area display of chest potentials. The object of this project is the development of such a stage.

A well defined display of the potentials of the human chest would greatly increase the understanding of cardiac disorders, assist in the diagnosis of such disorders, as well as improve the evaluation of the effect of hostile environments on the cardiac condition. Such a tool to assist in the evaluation of the effect of space travel on the physical condition of an astronaut can be of invaluable help.

"EFFECT OF METABOLIC RATE AND LOADING ON TEMPERATURE REGULATION AND SURVIVAL IN A HIGHLY CONDUCTIVE ATMOSPHERE" - Dr. C. W. Major

Proposal

The objective of the project is to determine whether changed metabolic rate or loading of rats exposed to a helium-oxygen atmosphere will significantly alter their thermal maintenance.

Experience in diving indicates helium can be substituted for nitrogen in the gaseous composition provided for astronauts. Helium has superior leak rate qualities, significantly prolongs the life of electrical components (due to its high conductivity), does not form significant radioisotopes with cosmic bombardment and may well be positively useful in reducing the danger of lung collapse.

Certain biological problems do arise with helium. There is an octave shift in voice level (which can be corrected electronically) and the high conductivity causes problems in body temperature maintenance. If body metabolic rate or metabolic loading are increased in such an atmosphere will there be any significant new problems or advantages. It is proposed that body temperature regulation in rats exposed to such an atmosphere be studied in animals of varying rates of metabolism induced by manipulating thyroid hormone levels and to load these with forced intake of food both in the temperature loss state and with thermal maintenance or constant thermal conditions. In man one must go to about a 93°F environment to maintain body temperature. At this level food loading can well be a serious factor. Pilot experiments in this area indicate that this can be lethal in hyperthyroid rats.

"UNIVERSITY OF MAINE SPACE SCIENCE LECTURE AND CONSULTATION SERIES" - Dr. B. R. Poulton

Proposal

Eminent persons involved in space science and technology at the national level will be invited to Maine to interact with the University community in a variety of ways. There would be lectures of interest to the general faculty and the student body, seminars for NASA trainees and investigators involved

in NASA sponsored research, and opportunity for extended discussion on an individual basis.

By the lecture series, we hope to increase interest among students and faculty in space science and technology, and to assist researchers and students now engaged in these areas.

"THE DIMENSIONALITY AND COGNITIVE DEMANDS OF CERTAIN SCIENCE AND MATHEMATIC PROBLEMS AND THEIR RELATIONSHIPS TO CONVERGENT AND DIVERGENT THINKING TASKS AND ANXIETY" - Professors F. W. Ohnmacht, G. T. Davis, and J. Lindlof

Proposal

Over the past 45 years numerous attempts have been made to analyze the academic achievements of students in order to disclose whether patterns of mental abilities are related to such achievements. More specifically, many attempts have been made to assess the predictive validities of various quantitative measures using success in the sciences as a criterion. These measures of quantitative reasoning have been variously associated with broader measures of intelligence, aptitude or achievement. Confusion is engendered by the fact that many studies have concluded that the best single predictor of success in a diffuse list of criterion domains is some variant of grade point average. Such studies do little if anything to clarify the nature of the thinking abilities and styles required of subjects for successful performance in scientific and/or mathematical activities and on measures that claim to measure achievement in these demains.

The present investigators start with the assumption that achievement in both science and mathematics is multi- rather than unidimensional and that the various dimensions differ in terms of the complexity and quality of thought

required of subjects and that such differences are of some importance in both the prediction of success in and the selection of students for various curricula. Of even more fundamental importance is the possibility of an improved understanding of the nature of abilities required and the processes utilized by subjects in the solution of mathematics and science problems. The present study would attempt to determine the dimensionality of two widely used achievement tests in the mathematics and science areas and to what extent each dimension is related to a sample of convergent and divergent thinking tasks as well as generalized anxiety. Furthermore, the study would attempt to gain insight into what is required of subjects to answer problems sampling the dimensions obtained.

"A STUDY OF ATTITUDES CONCERNING DEATH" - Dr. G. M. Vernon

Proposal

Confronting death and adjusting thereto is an important segment of every social system. As such it merits scientific study. Such study is particularly relevant to the space program. Participants therein are most likely more sensitive than most others to this aspect of living, being constantly faced with the possibility of death, either for themselves, or for others with whom they work and for whom they may share responsibility. Decisions are constantly being made which have at least a latent death factor. The importance of this factor to the families of those involved is apparent. In the space program any fear of death is compounded by the fear of the unknown. It is well established that concern with problems not directly connected with occupational tasks influences the performance thereof. Limited research has already indicated that removing some of the taboo aspect from the topic by talking about it tends to reduce tension associated therewith.

Further the extent of knowledge upon which one can draw in making decisions is related to the effectiveness of these decisions.

It would seem that the more we can learn about attitudes toward death the more effectively we can function in situations such as the space program.

Research in the behavioral sciences has progress rapidly. However, there remain several "islands" of behavior which have received but little attention. Attitudes toward death is one such area. The major objective of the proposed research is to secure scientific information about such attitudes and other related behavior including procedures used to adjust thereto. We need to know not only specific attitudes toward death, but also the configuration of social correlates of which each is a part. Findings would be related to established theories of human behavior and would be scrutinized for fruitful hypotheses for more extensive future study.

"A TUNNEL-DIODE TRANSMITTER FOR THE MEASUREMENT OF GASTRIC ACIDITY" - Professor H. T. MacFarland

Proposal

The object of the proposed research would be the development of a device for the measurement of gastric acidity, subject to the following conditions:

1. Without pumping the stomach
2. Capable of operating over a pH range from 2 - 7
3. Adaptable to all patients with a minimum of discomfort
4. Continuous observation possible over reasonable period of time

Present methods of measuring gastric acidity by the swallowing of a transistorized transmitter capable of recording changes in pH are made difficult by the size of the capsule which must be swallowed by the patient. A smaller

instrument which would transmit signals from within the stomach according to the level of hydrogen ion content of the gastric juices would be of great value.

Any improved methods of measuring body functions can be of value in the monitoring of the condition of space travellers.

"CLASSICAL EYELID CONDITIONING IN RATS& BIOELECTRIC CORRELATES" - Dr. H. C. Ebel

Proposal

The objective of the present project is to establish a laboratory for the investigation of classical conditioning, and its bioelectric correlates, in rats.

The most immediate research effort, and a continuing theme throughout the course of conditioning research, will be devoted to a systematic exploration of the experimental parameters of the independent variables which contribute towards learning in the classical conditioning situation. Concentrated research efforts would follow several defined courses:

1. An examination of bioelectric correlates of the conditioning, or learning, process. Such investigations would be directed at articulating the precise relationships that obtain between EEG (electroencephalographic) changes, evoked potentials from the cerebral cortex and the course of acquisition of the skeletal eyelid response.
2. The development of new techniques aimed at recording data, such as outlined above, from relatively unrestrained animals. Presently available techniques require that subjects be maximally restrained, thereby reducing somewhat the usefulness of the methods and simultaneously confounding results by the introduction of, presumably, noxious restraining devices.

"CONCERNING STRICTLY SINGULAR OPERATORS" - Professor R. B. Mericle

Proposal

It is proposed to study further strictly singular operators in normed linear spaces. The notion of a strictly singular operator has been defined as an extension of a compact operator. These have been studied in some detail since 1920 and have found wide application in solutions to differential and integral equations.

"INVESTIGATION OF PARAMETERS FUNDAMENTAL TO OPTIMIZATION OF DRAG TURBINES" - Professors W. L. Schneider and J. G. Klavuhn

Proposal

It is of great advantage in space applications if the equipment used, in addition to being effective, has inherent reliability and simplicity of configuration. The drag turbine is such a device. It has the following characteristics which point to its advantageous use in space applications if basic understanding of the device were improved:

High reliability

Low speed

Limited overspeed

High stall torque

Economical for high temperature use

Usable with highly contaminated fluids

Low first cost

Economical in small sizes

The objective of this investigation is to gain an improved understanding of the flow mechanism and the basic critical parameters involved.

In a turbine there is energy transfer between the gas and the rotor. This process has been thoroughly investigated and is well understood for both radial inflow and axial flow turbines; however, the process with respect to drag turbines is quite obscure.

Basic knowledge of the exact mechanism of flow and critical configuration is needed for optimum design. Improvement in efficiency would greatly increase the area of application of drag turbines.

"THE EFFECT OF REPEATED ROLLING CONTACT STRESS FIELDS ON THE MICROSTRUCTURE OF HIGH CARBON MEDIUM HARDNESS STELL" - Professor J. R. Lyman

Proposal

The mechanism of initiation of plastic deformation leading to surface fatigue spalling in rolling contact is sought. Specimens whose geometry allow a complete mathematical definition of the contact stress have been built from 52100 steel quenched and tempered to 47 Rockwell C. Pairs are currently being operated in pure rolling under carefully controlled load, speed and lubrication conditions in the M.E. Research Laboratory. The rolling contact test machine has been designed, developed and built at the University of Maine. The problem is to define the characteristic(s) of the stress field responsible for localized microstructural breakdown of the specimens when the stress magnitudes are such that a mechanics defined limit of elastic behavior of the material is not exceeded.

If a basic mechanism of failure initiation in rolling can be related to a stress characteristic, deliberate means may be sought to obviate the damaging stress factor. This will be of value to the designers of contact loaded devices in any field of endeavor.