INSTITUTE
FOR
AEROSPACE STUDIES

UNIVERSITY OF TORONTO

JET NOISE AND TURBULENCE

Semi-Annual Progress Report

for Period

May 1/65 to November 1/65

for work performed under

NASA Grant NsG-661

N 66-80978
(ACCESSION NUMBER)
14
(PAGES)
CR-69069
(NASA CR OR TMX OR AD NUMBER)
(THRU)
None
(CODE)
(CATEGORY)
FACILITY FORM 602

UTIAS

H. S. Ribner
Principal Investigator

E. AERODYNAMIC NOISE

		Page
E-1	Response of a Flexible Panel to Turbulent Flow: Running Wave Versus Modal Density Analysis - USAF/AFOSR	40
E-2	Turbulence Measurements Relevant to Jet Noise - NRC, USAF/AFOSR	41
E-3	An Aerofoil Probe for Measuring Transverse Velocity in Unsteady Flow - NRC, USAF/AFOSR	41
E-4	Refraction of Sound by Jet Flow and Jet Temperature - NRC, USAF/AFOSR, NASA	42
E-5	Distortion of a Shock Wave Traversed by a Vortex - NRC, USAF/AFOSR	43
E-6	Survey Article on Jet Noise - USAF/AFOSR	43

SUMMARY

The vibration response of panels exposed to the turbulent boundary layer remains a major source of noise in aircraft cabins. The difficulty in predicting this response has led to markedly differing approaches and simplifying assumptions. Recent evidence of running waves on such panels (UTIAS Report No. 98, and several later papers by Maestrello) has lead to the reexamination of the infinite panel/running wave treatment of UTIA Report No. 37 (1956); the objective was a comparison with the finite panel/modal density approach. Under compatible conditions complete agreement on the form of the vibration spectrum was found.

A large volume of specialized hot-wire measurements have been carried out in the UTIAS 4 inch low speed jet, and processing by analog and digital computer is partially completed. The aim is to relate the turbulence to the noise-generating features of the jet more directly than in prior work, with a minimum of simplifying assumptions. This work is approaching the final stages.

Our aerofoil probe anemometer (1964 Progress Report) - a tiny piezo-electric-mounted aerofoil that responds to the v-component of turbulence - has attracted a number of inquiries because of its simplicity and ruggedness. During the past year the design and calibration techniques have been refined further and some illustrative applications have been explored.

The research on refraction of pure tones injected into a jet via hypodermic tube has thrown further light on jet noise directionality. A completely new behavior has emerged in measurements with extremely cold nitrogen jets (-180°C): the sound was found to be refracted inward to produce a large enhancement along the jet axis. This was in striking contrast to the outward refraction for air jets at ambient and elevated temperatures that produces a large attenuation along the jet axis. Similar behavior - with quantitative agreement - was found with filtered jet noise. Thus the role of refraction has been defined quantitatively: it explains the 'valley' (or 'hill' for very cold jet) in the jet noise polar intensity plot without ambiguity.

The convection of a vortex through a plane shock wave gives rise to a weak S-shaped distortion of the shock together with a cylindrical sound wave. The theory for the sound wave (c.f. UTIA Report No. 61, 1959) has been extended to predict the shape of the shock distortion to within upper and lower bounds. Good qualitative agreement with the experimental shape is found.

Volume 8 of Advances in Applied Mechanics (Academic Press, 1964) contains the survey article on "The Generation of Sound by Turbulent Jets" referred to in the 1963 Progress Report. This book did not appear until the latter part of 1964. The article is reviewed in Applied Mechanics Reviews, Rev. 1231 (Feb. 1965).

H. S. Ribner

Staff Supervisor.

E-1 RESPONSE OF A FLEXIBLE PANEL TO TURBULENT FLOW: RUNNING WAVE VERSUS MODAL DENSITY ANALYSIS - USAF/AFOSR (H. S. Ribner)

A feature of the vibration excitation of a plane panel by an idealized model of a turbulent boundary layer has been investigated. In particular the infinite panel/running wave approach has been reexamined for comparison with the finite panel/modal density approach. Complete agreement was found on the form of the frequency spectrum of the mean square panel displacement under a range of conditions when the coincidence effect dominates. This agreement of the end result provides support for the validity of both methods of analysis since their bases are so different. It furnishes support, in addition, for the notion of a universal smoothed spectrum of the vibration response of panels under the specified range of conditions.

This work depends on the Fourier integral representation of a turbulent pressure field as a superposition of sinusoidal waves (Fig. E-1.1) of all orientations and wave lengths. These are travelling patterns because of convection. Each moving pressure wave excites a running ripple in the panel beneath it. Along a certain locus of wave lengths and directions (Fig. E-1.2) the ripple response for infinite panels has a resonant peak: this behavor is called coincidence. The response of finite panels is similar (Fig. E-1.3) if one averages over the modal resonances - the dots in the figure.

The frequency spectrum of the panel vibration derived from these figures for the infinite panel (running wave technique, present analysis (Fig. E-1.2) or for the finite panel (modal density technique, work of Williams and Lyon, Fig. E-1.3) is shown in this study to be the same. For the finite panel this is a smoothed spectrum, the individual modal resonances being averaged out.

An account of this work has been submitted for publication in the Journal of the Acoustical Society of America.

E-2 TURBULENCE MEASUREMENTS RELEVANT TO JET NOISE - NRC, USAF/AFOSR (W.T. Chu)

It is widely accepted that Lighthill's integral correctly relates the noise emission to the jet turbulence. However, direct measurement of the complex velocity correlations that constitute the integrand has been considered extremely difficult, if not impossible. Thus all earlier attempts to exploit the Lighthill integral have tried to generalize from much simpler measurements in combination with dimensional or similarity arguments. The results have been relatively crude and inconclusive.

In the present investigation the measurements have been of a more advanced nature, and the simplifying assumptions bridging the gap are reduced to a minimum. The very large volume of measurements required has been carried out, and processing of the first of several groups by analog and digital equipment is well along.

The turbulence measurements were made in the mixing region of the UTIAS four inch low-speed jet (about 140 ft/sec). The main facilities were a Hubbard constant-temperature hot wire anemometer, a special traverse gear, and a time-delay correlator of high precision. Improvements embodied in these facilities were described in Section E-3 of the 1964 Progress Report.

E-3 AN AEROFOIL PROBE FOR MEASURING TRANSVERSE VELOCITY IN UNSTEADY FLOW*- NRC, USAF/AFOSR (T. E. Siddon)

Prototype development of a small, rugged turbulence probe utilizing the aerodynamic lift concept (1964 Progress Report) has been carried to virtual completion. A brief descriptive technical note has appeared in the April (1965) issue of the AIAA Journal.

Various stages of probe development, including feasibility considerations, probe design, frequency response problems, calibration and experimental utilization are all given detailed description in a recent UTIAS publication (UTIAS T.N. 88) entitled "A Turbulence Probe Utilizing Aerodynamic Lift".

Figure E-3.1 depicts the final probe configuration. This design affords satisfactory frequency response (i.e. within 3 decibels for the frequency range 20-10,000 cps) and output levels of reasonable magnitude (e.g., $\approx$ 3 mv. for U = 100 fps with 15% turbulence intensity).

Probe calibration was achieved by placing the aerofoil sensor at various angles of attack in a jet flow which was chopped by rotating a segmented disc at the jet nozzle. Figure E-3.2 illustrates the linearity between output voltage and the component of velocity normal to the aerofoil.

Representative measurements of turbulence intensity, frequency spectra, autocorrelations, and two-point space-time correlations were made in the UTIAS four-inch low speed free air jet facility (e.g., Fig. E-3.3).

Further development of the aerofoil probe concept and its applications is continuing.

---

* Patent applied for.

E-4 REFRACTION OF SOUND BY JET FLOW AND JET TEMPERATURE - NRC, USAF/AFOSR, NASA (E. Grande)

The work reported last year has been extended considerably, especially in producing jets at near liquid air temperature. The measurements explored the refraction of the sound field of an omnidirectional pure tone 'point' source of sound by the velocity and temperature fields of a 3/4" air or nitrogen jet.

Several different sound source positions were employed: one within the potential core of the jet, others off the jet axis, entirely outside the jet. For the source in the on-axis position, the air jet velocity was varied between M = 0.5 to 0.95 at a fixed source frequency and at ambient jet temperature, yielding a characteristic axial refraction valley. The maximum intensity reduction was of the order of 35 dB at M = 0.95 and 3000 cps. in the experiment.

Using a very cold nitrogen jet ($T = -180^{\circ}C$), the sound was found to be refracted inward - a focussing or channeling effect - so that the refraction valley was replaced by a 'hill'. The height of this 'hill' increased with source frequency and decreased with increasing jet velocity. At M = 0.112 and 7000 cps. the intensity peak reached a 26 dB magnitude. A comparison of the cold jet 'hill' with the 'valley's of warmer jets is shown in Fig. E-4.1.

For the source in the off-axis positions, varying the air jet velocity between M = 0.3 and M = 0.9, intensity polars were obtained very similar to those for on-axis position, except for a certain skewness resulting from the non-symmetrical source position (Fig. E-4.2)

Jet noise polar directional plots at varying filter frequencies and jet velocity were obtained both for the air jet at ambient temperature and the nitrogen jet at $T = -180^{\circ}C$. These exhibited the same general shape as the corresponding polar plots for injected sound.

The jet noise polar plots in the frequency bands were 'corrected' for refraction and convection to yield the approximate basic directivity of the eddy sources. The refraction correction was made by adding the dB reduction in the refraction valley of the injected sound polar to the valley of the jet noise polar for the same filter frequency. The convection correction employed a modified Lighthill factor. At M = 0.3 the basic directivity in frequency bands (Fig. E-4.3) shows good agreement with a low-speed model, $a + b \cos^4\theta$, due to Ribner. At M = 0.9 the agreement is only fair, due presumably to neglect of Doppler shift and other approximations.

The earlier phase of this investigation is reported most completely in UTIAS Tech. Note No. 109 "Refraction of Sound by Jet Flow and Jet Temperature" by Atvars, Schubert, Grande and Ribner (May 1965), which is almost ready for distribution. This will supersede AIAA Paper No. 65-82 (Jan. 1965). The later phase will be reported in "Refraction of Sound by Jet Flow and Jet Temperature, II" by E. Grande, which has been prepared as a second Technical Note. The account above is essentially the summary of this second Technical Note. (See Journal Acoust. Soc. Amer., 37, pp. 168-170(L) (Jan., 1965) and a forthcoming issue (fall of 1965) for abbreviated accounts.)

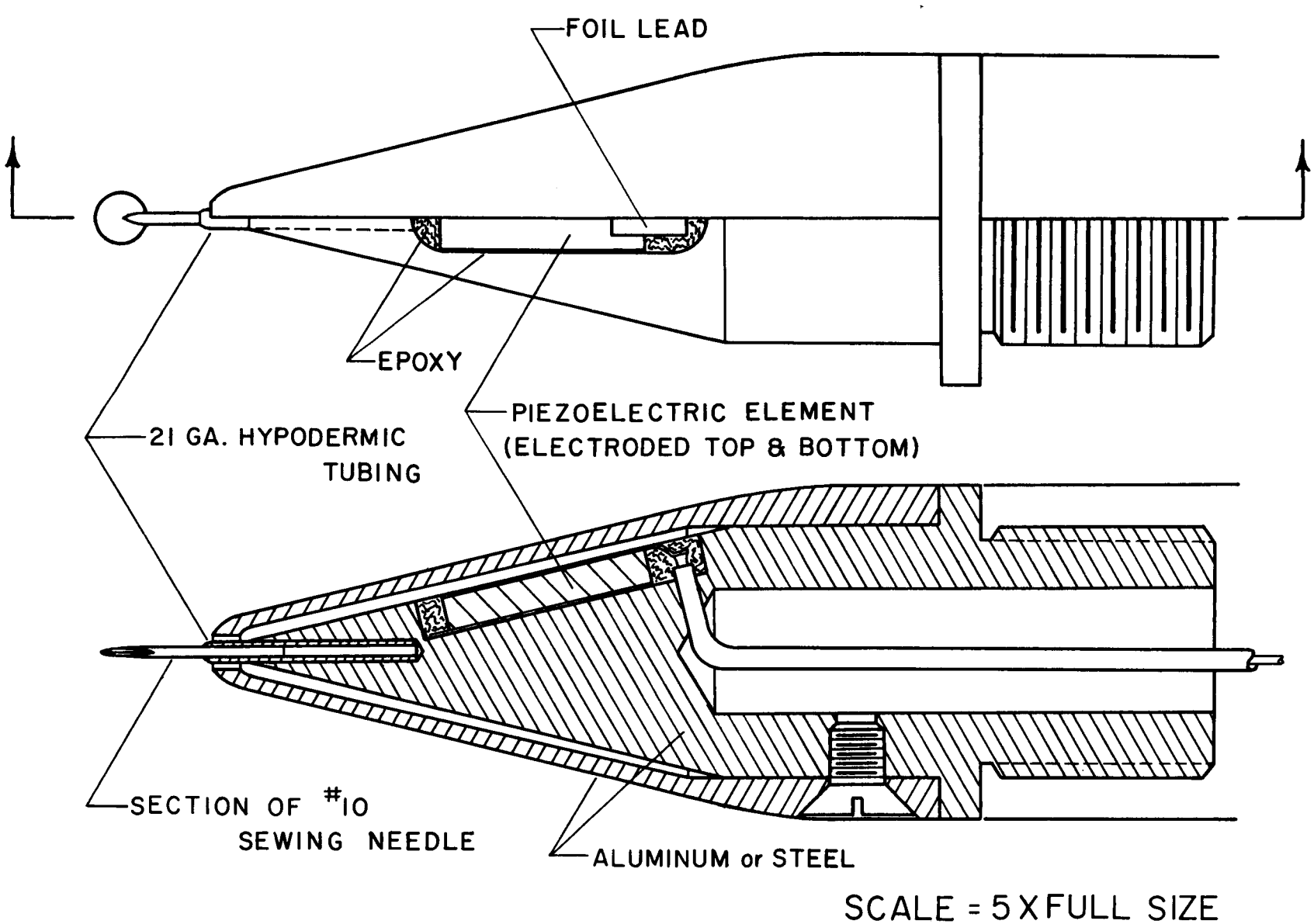

FIG. E-3.1 ASSEMBLY DRAWING OF THE FINAL PROBE DESIGN

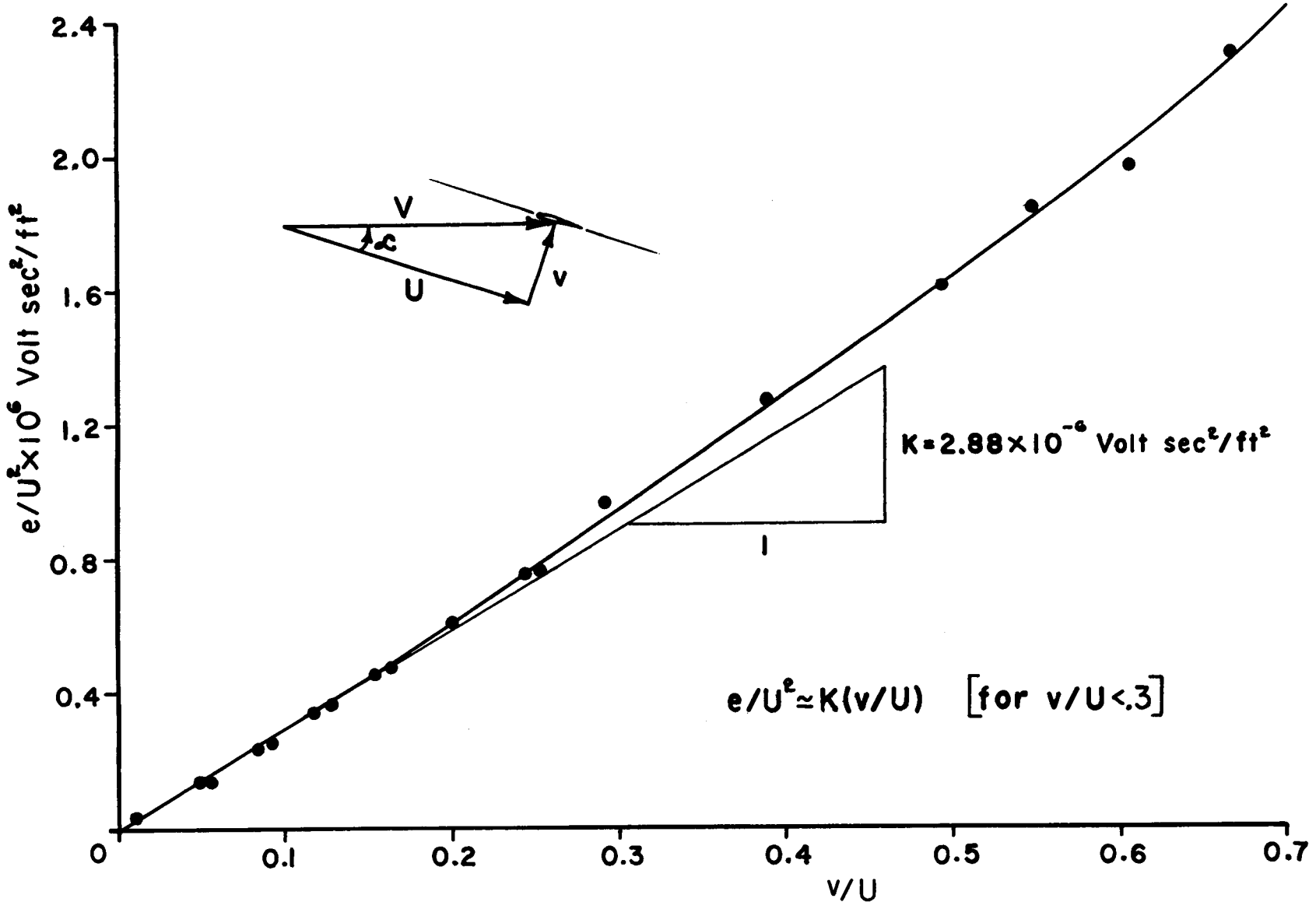

FIG. E-3.2 TYPICAL CALIBRATION CURVE FOR THE AEROFOIL PROBE

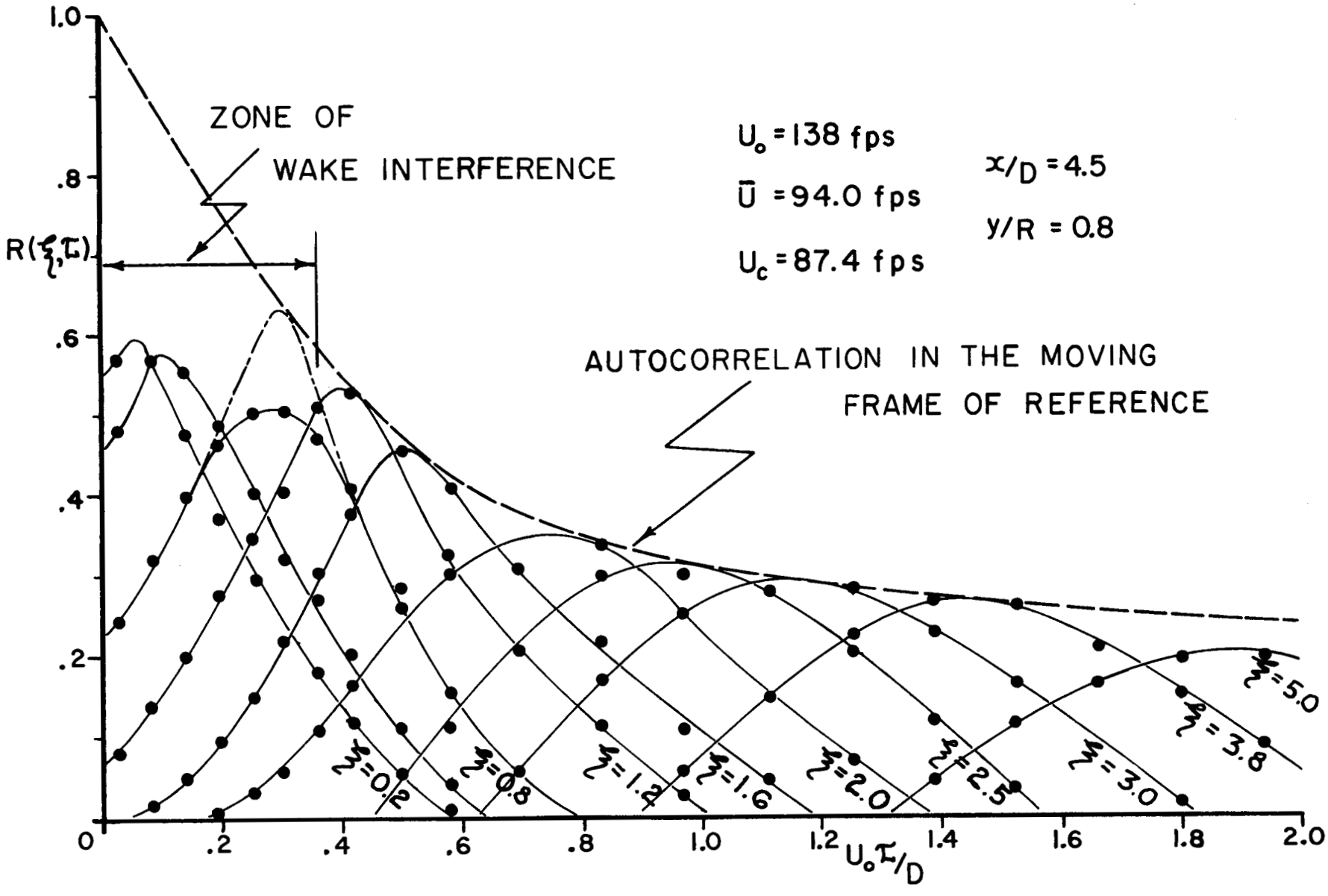

FIG. E-3.3 SPACE-TIME CORRELATION OF TRANSVERSE VELOCITY FLUCTUATIONS WITH DOWNSTREAM SEPARATION.

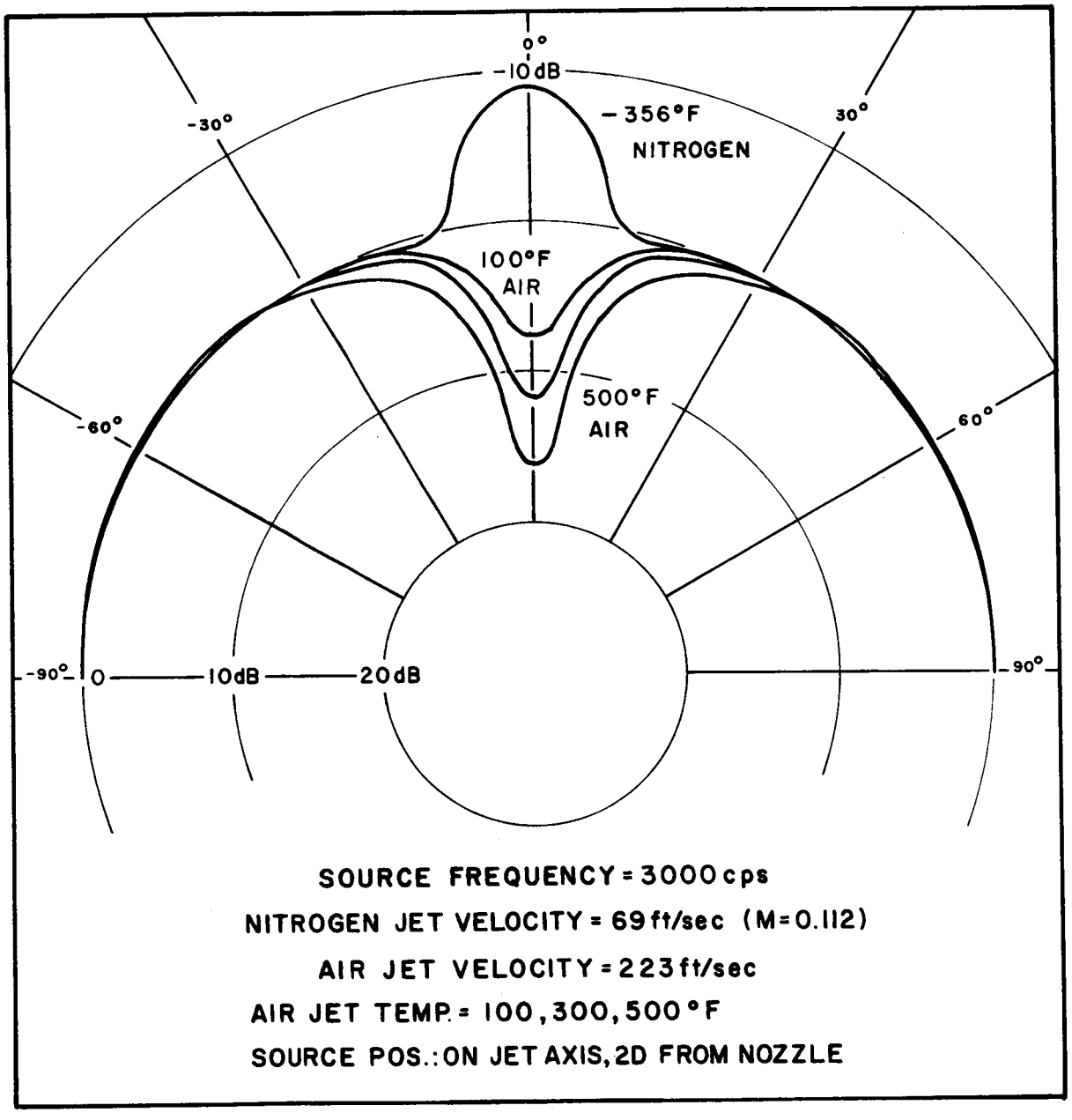

FIG. E-4.1 EFFECT OF JET TEMPERATURE ON DIRECTIVITY

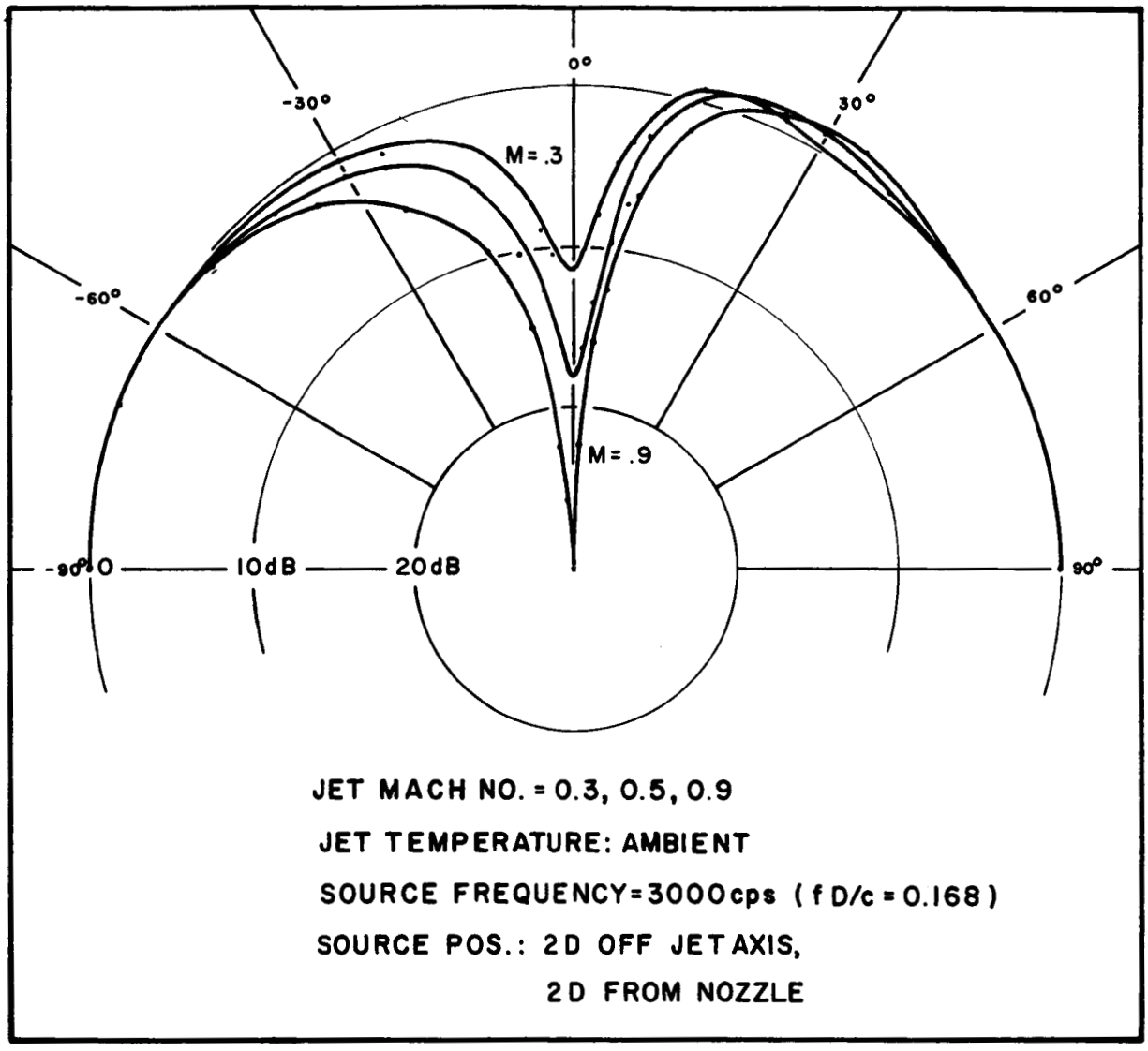

FIG. E-4.2 EFFECT OF JET VELOCITY ON DIRECTIVITY FOR OFF-AXIS SOURCE POSITION

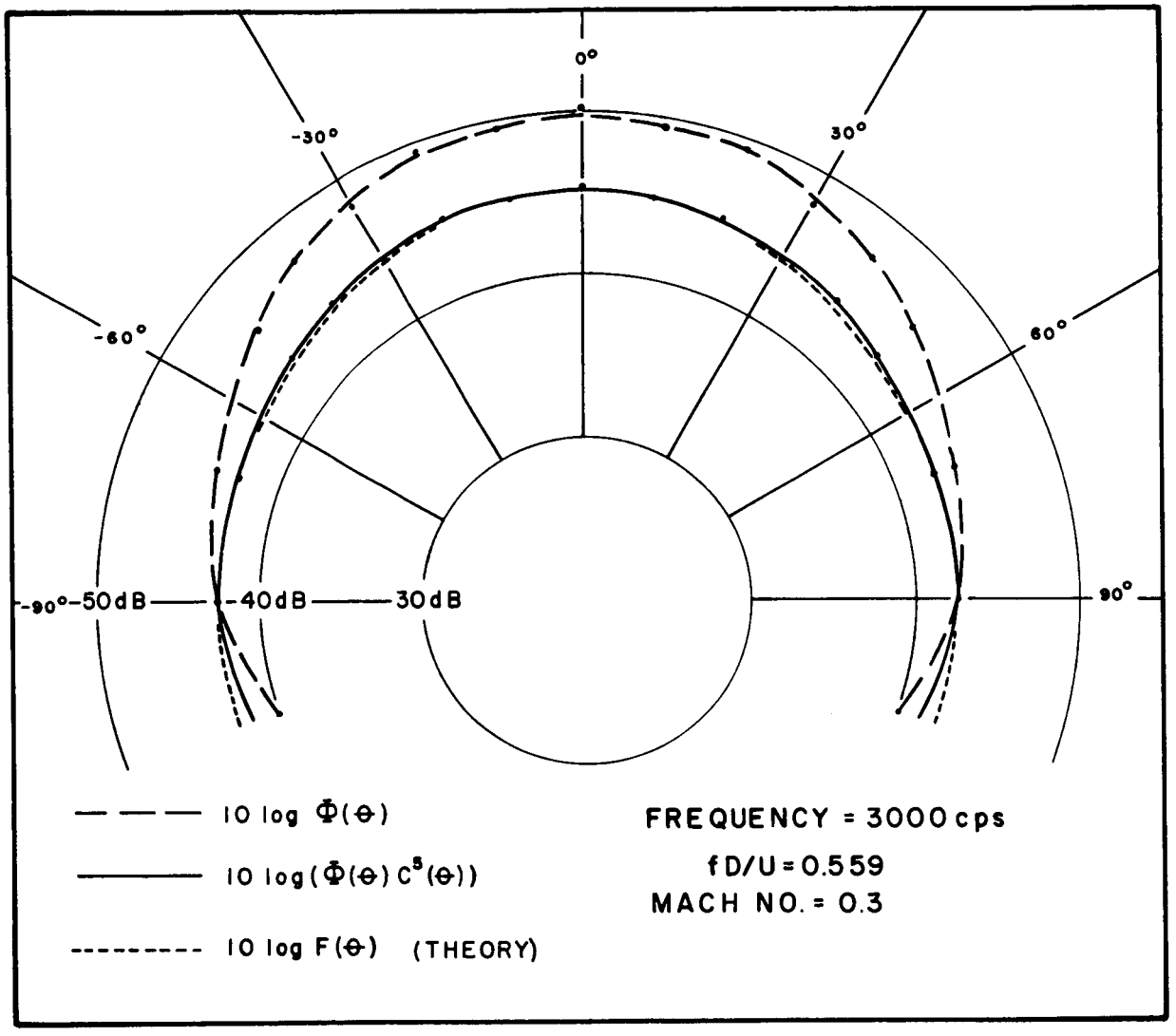

FIG. E-4.3 COMPARISON OF EXPERIMENTAL AND THEORETICAL BASIC DIRECTIVITY

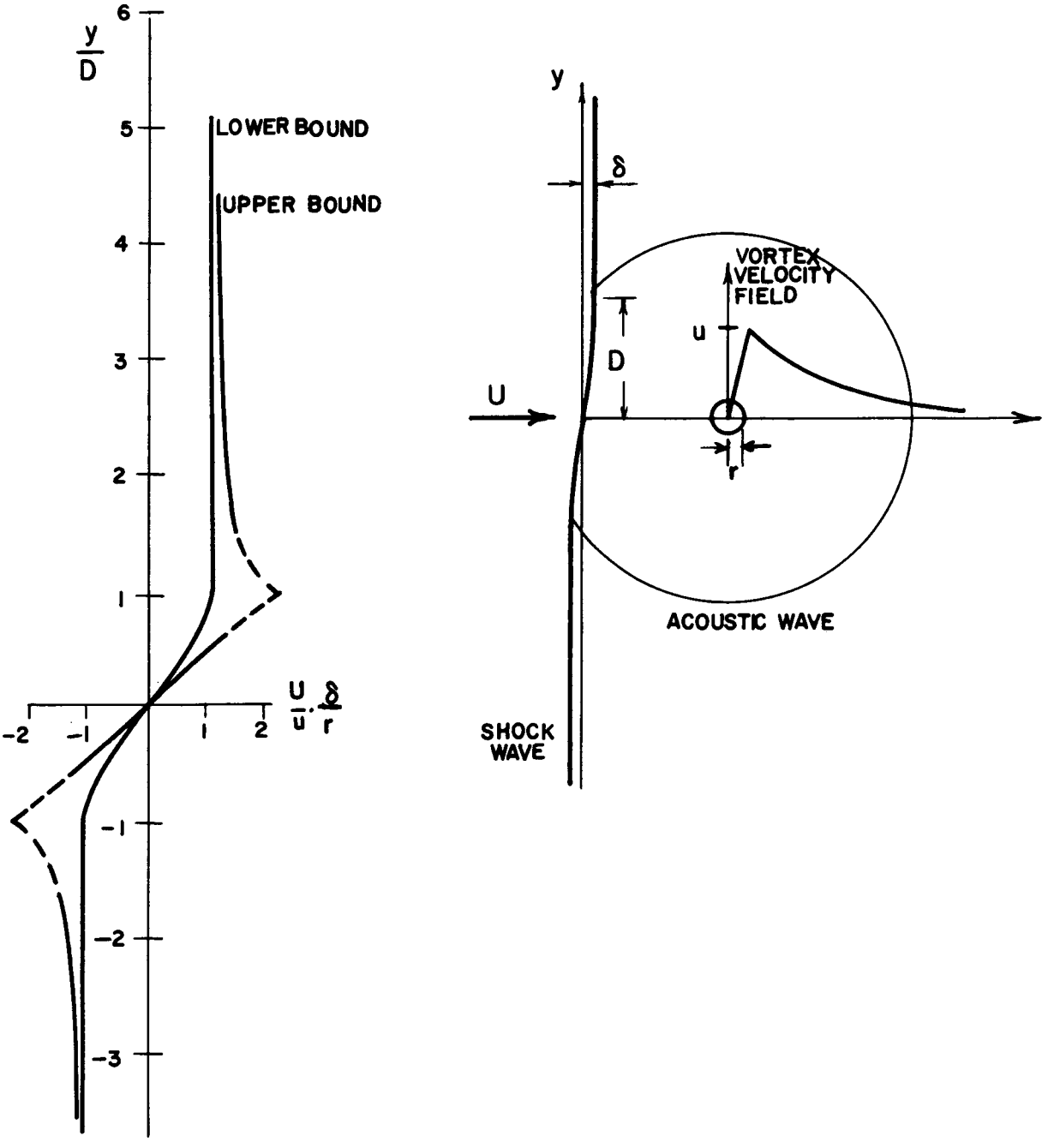

FIG. E 5.1 UPPER AND LOWER BOUNDS FOR DISTORTION OF SHOCK WAVE TRAVERSED BY A VORTEX

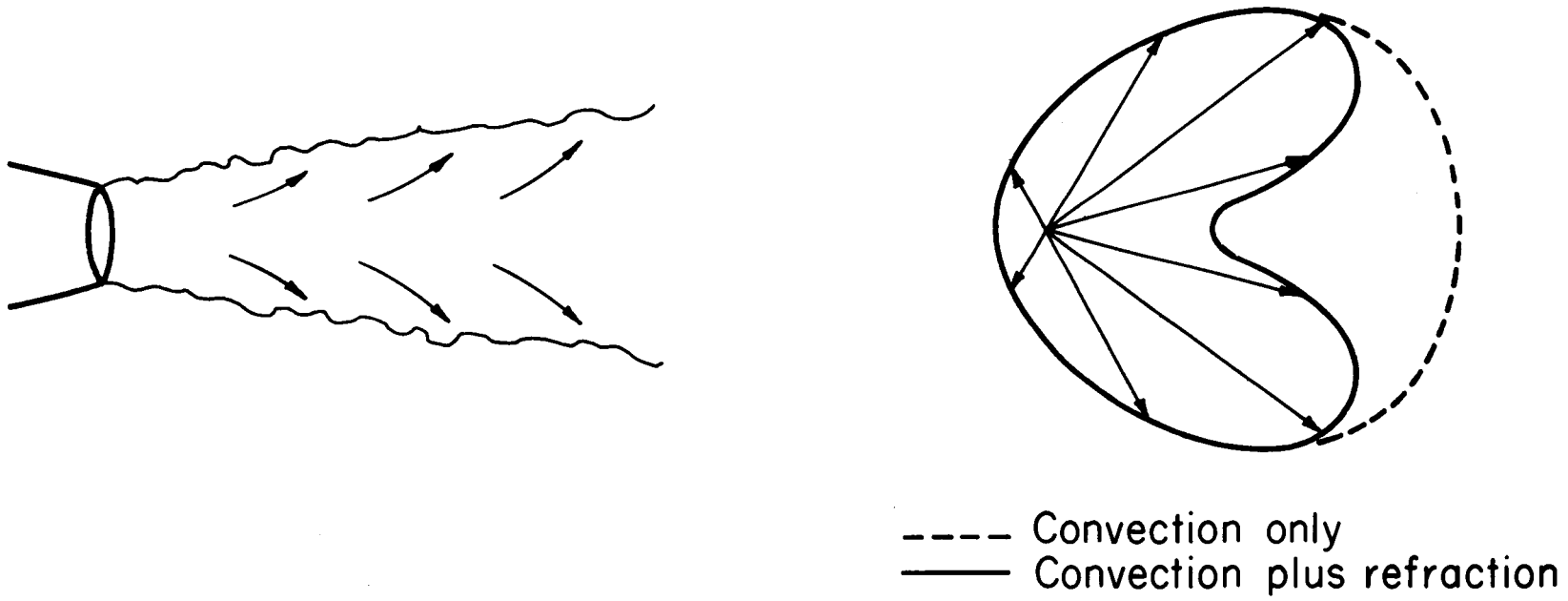

FIG. E-6.1 OUTWARD REFRACTION OF SOUND RAYS BY JET FLOW, GIVING VALLEY OF LOW INTENSITY IN THE POLAR PLOT. (REPRODUCED FROM REVIEW ARTICLE BY H. S. RIBNER, ADVANCES IN APPLIED MECHANICS, VOL. 8, pp. 103-182, 1964)