AN EXTENSION OF THE PARAMETER PLANE METHOD*

D.D. Šiljak**

FACILITY FORM 602
N66 81818
(ACCESSION NUMBER)
20
(PAGES)
CR-70478
(NASA CR OR TMX OR AD NUMBER)
(THRU)
None
(CODE)
(CATEGORY)

---

* The research reported herein was supported by the National Aeronautics and Space Administration under Contract No. NAS2-2609.

** D.D. Šiljak is with the University of Belgrade and Michailo Pupin Institute, Belgrade, Yugoslavia, and is presently a Visiting Professor at the University of Santa Clara, Santa Clara, California

AN EXTENSION OF THE PARAMETER PLANE METHOD

D.D. Šiljak

Summary: This paper presents an extension of the parameter plane method to the case in which the coefficients of the characteristic equation are linear functions of two adjustable parameters and their product. As a simple and rapid procedure for factoring characteristic polynomials in the parameter plane, the presented method is applied to the design of linear continuous and sampled-data control systems, as well as nonlinear systems. The procedure is illustrated by examples in which multivariable control systems are considered.

In previous papers [1-3], a parameter plane method has been applied to the analysis and synthesis of linear continuous, sampled-data, and nonlinear control systems. In the linear analysis [1], the method relates two adjustable system parameters, which appear linearily in the coefficients of the relevant characteristic equation, to all the root locations. A simple and rapid procedure is developed for factoring characteristic polynomials in the plane of these two parameters. This enables the designer to maintain control over salient system characteristics of both transient and frequency responses. The procedure extends in a straightforward manner to sampled-data control systems [2,4,5]. Recently [6] the parameter plane method has been applied to the simultaneous consideration of steady-state and transient responses of linear control systems.

In nonlinear system analysis [3], the stability of self-excited oscillations has been investigated in the parameter plane with respect to both the system parameters and the initial conditions. Control systems with two nonlinearities and with amplitude- and frequency-dependent describing functions have been designed. The proposed method has been extended to relative stability [3] and sensitivity problems in nonlinear controls [7,8].

Limitations of the parameter plane method may arise when the adjustable system parameters enter nonlinearily into the coefficients of the characteristic equation. This paper extends the method to the case when the coefficients depend on the linear combination of two adjustable parameters and their product. The presented procedure is then applied to the design of a multivariable control system by giving in evidence the closed-loop pole-zero configurations as functions of adjustable system parameters.

LINEAR CONTINUOUS SYSTEMS

Consider the characteristic equation

$$f(s) = \sum_{k=o}^{m} a_k s^k = 0 \tag{1}$$

in which the coefficients $a_k (k = 0, 1, \ldots, m)$ are real and s is the complex variable. The coefficients a_k may be expressed as functions of two system parameters α and β as

$$a_k = b_k \alpha + c_k \beta + h_k \alpha\beta + d_k \ . \tag{2}$$

If s is expressed by

$$s = -\omega_n \zeta + j \omega_n \sqrt{1-\zeta^2} \tag{3}$$

where ω_n is the undamped natural frequency and ζ is the relative damping coefficient, the characteristic equation 1 may be rewritten as two equations in two unknowns α and β. Substituting equations 2 and 3 into equation 1 and applying the conditions that the summations of the reals and the imaginaries must go to zero independently, equation 1 can be rewritten in terms of α and β in the following form

$$\begin{aligned} \alpha\ B_1(\omega_n,\zeta) + \beta\ C_1(\omega_n,\zeta) + \alpha\beta\ H_1(\omega_n,\zeta) + D_1(\omega_n,\zeta) &= 0 \\ \alpha\ B_2(\omega_n,\zeta) + \beta\ C_2(\omega_n,\zeta) + \alpha\beta\ H_2(\omega_n,\zeta) + D_2(\omega_n,\zeta) &= 0 \end{aligned} \tag{4}$$

where

$$B_1 = \sum_{k=o}^{m} (-1)^k b_k \omega_n^k U_{k-1}(\zeta) \qquad B_2 = \sum_{k=o}^{m} (-1)^k b_k \omega_n^k U_k(\zeta)$$

$$C_1 = \sum_{k=o}^{m} (-1)^k c_k \omega_n^k U_{k-1}(\zeta) \qquad C_2 = \sum_{k=o}^{m} (-1)^k c_k \omega_n^k U_k(\zeta) \tag{5}$$

$$H_1 = \sum_{k=o}^{m} (-1)^k h_k \omega_n^k U_{k-1}(\zeta) \qquad H_2 = \sum_{k=o}^{m} (-1)^k h_k \omega_n^k U_k(\zeta)$$

$$D_1 = \sum_{k=o}^{m} (-1)^k d_k \omega_n^k U_{k-1}(\zeta) \qquad D_2 = \sum_{k=o}^{m} (-1)^k d_k \omega_n^k U_k(\zeta) \ .$$

In equations 6, functions $U_k(\zeta)$ are the Chebyshev functions of the second kind with an argument $0 \leq |\zeta| \leq 1$ (for stable systems $0 \leq \zeta \leq 1$). Functions $U_k(\zeta)$ are obtained by using the recurrence formula

$$U_{k+1}(\zeta) - 2\zeta\, U_k(\zeta) + U_{k-1}(\zeta) = 0 \tag{6}$$

with $U\ (\zeta) \equiv 0$ and $U\ (\zeta) \equiv 1$. For pertinent values of ζ, functions $U_k(\zeta)$ are given in Table II of reference 1 up to $k = 10$.

For specified values of ω_n and ζ, the coefficients B_1, B_2, C_1, C_2, H_1, H_2, D_1, and D_2 are all numerical values. Equations 4 then represent two equations in two unknowns α and β which may be solved for α and β providing the Jacobian J of equations 4 is different from zero, as shown in the following.

Denote:

$$\begin{aligned}
a &= B_2H_1 - B_1H_2 \\
b &= C_2H_1 - C_1H_2 \\
c &= C_1D_2 - C_2D_1 \\
d &= B_1D_2 - B_2D_1 \\
e &= B_2C_1 - B_1C_2 + H_1D_2 - H_2D_1 \\
f &= C_2B_1 - B_2C_1 + H_1D_2 - H_2D_1 \\
J &= a\alpha + b\beta + B_1C_2 - B_2C_1 \ .
\end{aligned} \tag{7}$$

By eliminating β from equations 4 one obtains

$$\alpha_{1,2} = \frac{-e \pm \sqrt{e^2 - 4ac}}{2a}, \quad \beta_{1,2} = -\frac{B_1\alpha_{1,2} + D_1}{H_1\alpha_{1,2} + C_1} \tag{8}$$

Elimination of α from the same equations 4 yields

$$\beta_{1,2} = \frac{-f \pm \sqrt{f^2 - 4bd}}{2b}, \quad \alpha_{1,2} = -\frac{C_1\beta_{1,2} + D_1}{H_1\beta_{1,2} + B_1}. \tag{9}$$

The solutions of equations 4 for α and β are given by equations 8 if $a \neq 0$. If $a = 0$, the solutions are given by equations 9 provided $b \neq 0$. In the special case, when $a = b = 0$, the solutions for α and β are

$$\alpha = -\frac{c}{e}, \quad \beta = -\frac{d}{f}. \tag{10}$$

In the original parameter plane method where $h_k = 0$ $(k = 0, 1, \ldots, m)$ and $H_1 = H_2 = 0$, the solutions for α and β may be obtained from equations 10.

It is important to note, in general, for given values of ω_n and ζ there are two pairs of values (α_1, β_1) and (α_2, β_2) which satisfy equations 4. In addition, since in linear system analysis the parameters are represented by real numbers, the following conditions

$$\begin{aligned} e^2 - 4ac &\geq 0 \\ f^2 - 4bd &\geq 0 \end{aligned} \tag{11}$$

should be satisfied.

By assigning different values for ω_n and ζ and solving equations 4 for α and β as shown above, one may obtain loci of points in the $\alpha\beta$-plane, which correspond to the roots with relative damping coefficient, undamped natural frequency, or settling time being constant, depending on which variable among ζ, ω_n, or $\omega_n\zeta$ is considered constant. In

further developments, these loci will be called the ζ curve, ω_n curve, and $\omega_n\zeta$ curve, respectively. These curves are readily plotted using digital computer. After the curves are plotted, the complex roots of the characteristic equation may be calculated by interpolating between the plotted curves.

The loci of points corresponding to real roots, which were called the σ lines in reference 1, are determined directly from the characteristic equation by substituting equation

$$s = -\sigma \tag{12}$$

and equation 2 into equation 1. This yields

$$\alpha\, B(\sigma) + \beta\, C(\sigma) + \alpha\beta\, H(\sigma) + D(\sigma) = 0 \tag{13}$$

where

$$B(\sigma) = \sum_{k=0}^{m} b_k(-\sigma)^k , \qquad C(\sigma) = \sum_{k=0}^{m} c_k(-\sigma)^k$$
$$H(\sigma) = \sum_{k=0}^{m} h_k(-\sigma)^k , \qquad D(\sigma) = \sum_{k=0}^{m} d_k(-\sigma)^k \tag{14}$$

equations 13 is solved for β to give

$$\beta = -\frac{B\,\alpha + D}{H\,\alpha + C} \tag{15}$$

It can be seen from equation 15 that the σ lines are not straight lines as in the case [1-3] when the parameters α and β appear linearily in the coefficients of equation 1. However, for a given σ there is only one pair of the values (α,β) which satisfy equation 13. The plotting of σ lines in the $\alpha\beta$-plane can be performed in a straightforward manner. The real roots of equation 1 are determined by interpolating between these lines.

Example 1.

To illustrate the presented procedure, consider a two-variable control system given in Fig. 1, the transfer functions of which are

$$G_1(s) = \frac{K_1}{s(0.01s+1)(0.05s+1)} \qquad G_{-1}(s) = 0.5$$
$$G_2(s) = \frac{K_2}{s} \qquad G_{-2}(s) = 0.4 \tag{16}$$

The nonlinearity n_1 is not considered here.

From the equations describing the block diagram of Fig. 1

$$C_1(s) = G_1(s)\ [R_1(s) - C_1(s)] - G_1(s)\ G_{-2}(s)\ C_2(s)$$
$$C_2(s) = G_2(s)\ [R_2(s) - C_2(s)] - G_2(s)\ G_{-1}(s)\ C_1(s) \tag{17}$$

it follows that

$$C_1(s) = \frac{[1+G_2(s)]\,G_1(s)}{f(s)}\,R_1(s) - \frac{G_1(s)\ G_2(s)\ G_{-2}(s)}{f(s)}\,R_2(s) \tag{18}$$

$$C_2(s) = -\frac{G_1(s)\ G_2(s)\ G_{-1}(s)}{f(s)}\,R_1(s) + \frac{[1+G_1(s)]\ G_2(s)}{f(s)}\,R_2(s) \tag{19}$$

$$f(s) = [1+G_1(s)][1+G_2(s)] - G_1(s)\ G_2(s)\ G_{-1}(s)\ G_{-2}(s) \tag{20}$$

$C_1(s)/R_1(s)$ and $C_1(s)/R_2(s)$ are defined from equations 18 with $R_2(s) = 0$ and $R_1(s) = 0$, respectively, etc.

If the transfer functions of equations 16 are substituted in equation 20, the characteristic equation has the form

$$f(s) = 0.0005s^4 + (0.0005\alpha + 0.06)s^3 + (0.06\alpha + 1)s^2 + $$
$$+ (\alpha + \beta)s + 0.8\,\alpha\beta = 0 \tag{21}$$

where

$$\alpha = K_2\ , \qquad \beta = K_1\ . \tag{22}$$

By applying the outlined procedure, the ζ curves are plotted in Fig. 2 for $\zeta = 0, 0.1, 0.2, 0.5$. The values of ω_n are interpolated on these curves. According to equations 8 or 9, on the ζ curves there are two pairs of values (α, β) which correspond to the same value of ω_n.

The σ lines are plotted in Fig. 2 using equation 21. Since equation 21 has always two real roots in the plotted $\alpha\beta$-plane, two families

of σ lines are plotted. One of the families is drawn by dotted lines, and the other by solid lines. The real roots of equation 21 are determined by interpolating between the curves.

To illustrate the factorization of equation 21, a point M(38.8;42.5) is chosen in Fig. 2. By interpolating between the ζ curves, a complex pair of roots $s_{1,2}$ of equation 21 is determined by $\zeta = 0.3$ and $\omega_n = 27$. The corresponding real roots determined from the σ lines are $s_3 = -33.6$ and $s_4 = -108.4$.

By factoring the polynomial $f(s)$ of equation 21, the poles of the transfer function $\frac{C_1}{R_1}(s)$, $\frac{C_1}{R_2}(s)$, $\frac{C_2}{R_1}(s)$ and $\frac{C_2}{R_2}(s)$ of equations 18 and 19 are determined. In the transient response analysis, it is necessary to evaluate also the zeros of these functions. Therefore, the factorization of functions $1 + G_1(s)$ and $1 + G_2(s)$ in equations 18 and 19 should be performed. The factorization of $1 + G_2(s)$ entails no difficulty since $G_2(s) = K_2/s$ and for M(38.8;42.5) the corresponding zero is equal to -38.8. For factoring $1 + G_1(s)$, it should be noted that if $\alpha = K_2 = 0$, the characteristic polynomial $f(s)$ of equation 20 reduces to $1 + G_1(s)$. Thus, the corresponding zeros can be read from the same diagram of Fig. 2 by considering only the β axis. At the point N(0;42.5), which is related to the point M(38.8;42.5), the complex pair of zeros of $1 + G_1(s)$ are interpolated on the curve $\zeta = 0.2$ where $\omega_n = 28$ and the real zero is -108.

NONLINEAR SYSTEMS

The stability analysis of nonlinear control systems in the parameter plane [3] is based upon the application of the describing function techniques [9]. For absolute-stability investigations and investigations of sustained oscillations, sometimes called the limit cycle, two loci are to

be drawn in the parameter plane, namely, the curve $\zeta = 0$ and the M locus. The former represents the linear part of the system, the latter the nonlinearity. Along the curve $\zeta = 0$, various values of ω are marked; along the M locus, the values of A and frequency ω are shown. After the stable domain is determined from the plot of the curve $\zeta = 0$, the absolute stability of the nonlinear system depends on the relative location of the curve $\zeta = 0$ and the M locus, and the limit cycles are found at their intersections. The stability is investigated with respect to both the initial conditions and the system parameters. The application of the method permits the designer to maintain control over the amplitude and frequency of the feasible sustained oscillations when adjusting parameters of linear and nonlinear parts of the system. This may be useful in the design of nonlinear control systems which have sustained oscillations as normal or desired operating characteristics.

Let a nonlinear control system be described by a nonlinear differential equation of the form

$$C(s)x + B(s)\,F(x, sx) = 0 \tag{23}$$

where $s \equiv d/dt$, $C(s)$ and $B(s)$ are polynomials in s with the degree of the polynomial $C(s)$ higher than the degree of the polynomial $B(s)$, and function $F(x, sx)$ represents the nonlinearity. In the describing function method, it is supposed that the solution $x = x(t)$ of the differential equation 23 is sufficiently close to the solution

$$x = A \sin \phi \tag{24}$$

where $\phi = \omega t$, of the corresponding linear differential equation which has the following characteristic equation .

$$C(s) + B(s)(N_1 + \frac{N_2}{\omega} s) = 0 \tag{25}$$

Equation 3 is obtained from equation 23 by replacing the function $F(x,sx)$ by

$$F(x,sx) = N_1 x + \frac{N_2}{\omega} sx \tag{26}$$

where

$$N_1 = \frac{1}{\pi A} \int_0^{2\pi} F(A \sin \phi, A\omega \cos \phi) \sin \phi \, d\phi$$

$$N_2 = \frac{1}{\pi A} \int_0^{2\pi} F(A \sin \phi, A\omega \cos \phi) \cos \phi \, d\phi \, . \tag{27}$$

For nonlinear function $F(x,sx)$ usually encountered in control systems, the integrals in equations 27 are computed once for all and given in diagrams [9].

In cases where the periodic steady-state oscillations are considered, the amplitude A and frequency ω of equation 24 are constant, and $s = j\omega$. The characteristic equation 25 corresponds to a linear differential equation with constant coefficients and may be written in the form of equation 1. The coefficients a_k may be functions of the describing function $N_1 + j\,N_2$ and system parameters as given in equation 2 where α and β may represent N_1, N_2 or an adjustable system parameter. Therefore, the variation of the describing function will appear on one of the parameter plane axis, but will not affect the $\zeta = 0$ curve computed from the corresponding equations 8 and 11.

Example 2.

To illustrate the stability analysis, consider the system of Fig. 1 where the transfer functions of equations 16 are the same and the nonlinearity n_1 has the form given in the upper right corner of Fig. 3. The inputs to the system are zero; i.e., $r_1 = r_2 = 0$.

Since the function $F(x)$ of Fig. 3, representing the nonlinearity n_1, is a single-valued function of x from equations 27, it follows that

$$N_1 = \frac{4c}{\pi A}\sqrt{1 - \frac{b^2}{A^2}}\ , \quad A \geq b \tag{28}$$

and $N_2 \equiv 0$. The characteristic equation of the linearized system has the form given in equation 21 save that

$$\alpha = K_2\ , \quad \beta = K_1 N_1\ . \tag{29}$$

Therefore, the curve $\zeta = 0$ plotted in Fig. 3 is the same as that of Fig. 2, except for the change in axes given in equations 29.

If $K_1 = 393$ and $K_2 = 25$, the M locus (a) of Fig. 3 are calculated from equation 28. A limit cycle of an amplitude $A = 3.2$ and frequency $\omega = 50$ rad/sec is indicated in the point $M_1(25;156)$. It is interesting to note that a limit cycle of the same frequency but with an amplitude of $A = 2.41$ can be obtained if $K_2 = 125$ as indicated by the M locus (b) and $M_2(125;181)$. It comes from the fact that in the case under investigation, when the $\alpha\beta$ term appears in the coefficients of the characteristic equation, there are two pairs of values (α,β) which correspond to the same pair of values (ω_n, ζ).

The system used in the example is stable whenever the entire M locus is located in the stable region, as illustrated by M locus (c).

The diagram of Fig. 3 can be used in the study of two nonlinearities in the system of Fig. 1. If another nonlinearity is associated with the transfer function $G_2(s)$, the corresponding describing function variation would appear along the α axis in Fig. 3. Then, the stability analysis of systems with two nonlinearities presented in reference 3 can be applied.

The analysis of nonlinear systems presented here can be used in relative stability investigations as shown in reference 3 . If the M

locus is plotted on the diagram 2, the functions $\zeta(A)$ and $\omega_n(A)$ may be obtained. These functions may be used in the transient response analysis of nonlinear control systems [9].

SAMPLED-DATA SYSTEMS

Exactly the same sort of analysis and synthesis, in terms of parameter plane diagrams applied to continuous systems, can be used in the design of sampled-data control systems. The only differences arise because the contours to be mapped from the complex variable plane onto the parameter plane are altered. After the contours are mapped onto the plane of adjustable parameters, however, the application of the method is the same as outlined in a previous section [1,2].

Consider the characteristic equation of sampled-data control system in the form

$$f(\epsilon^{sT}) = \sum_{k=o}^{m} a_k \, \epsilon^{kTs} = 0 \tag{30}$$

where the coefficients $a_k (k=0,1,\ldots,m)$ are given by equation 2, T is the sampling period, and s is the complex variable. By using the z-transformation

$$z = \epsilon^{sT} , \tag{31}$$

equation 30 may be rewritten as

$$f(z) = \sum_{k=o}^{m} a_k \, z^k = 0 \tag{32}$$

and the analysis of the system may be performed in the z-plane.

If the complex variables s and z are expressed by

$$\begin{aligned} s &= -\omega_n \zeta + j \omega_n \sqrt{1-\zeta^2} \\ z &= \omega_z \zeta_z + j \omega_z \sqrt{1-\zeta_z^2} , \end{aligned} \tag{33}$$

the following relationship can be derived

$$\begin{aligned} \omega_z &= \epsilon^{-\omega_n \zeta T} \\ \zeta_z &= \cos \omega_n T \sqrt{1-\zeta^2} . \end{aligned} \tag{34}$$

Repeating the solution procedure outlined in a previous section, the parameters α and β may be expressed as functions of ω_z and ζ_z or as functions of ω_n and ζ. Thus, by plotting the corresponding curves in the $\alpha\beta$-plane, the factorization of the characteristic polynomial may be performed in either the z- or s-plane to obtain the complex roots. After the curves are plotted, the factorization is performed by interpolation between the curves.

By substituting $s = -\sigma$ in equation 30, and solving equation 30 for α or β, the σ lines may be plotted in the parameter plane. If, in equation 32, the variable z is substituted by σ_z, the σ_z lines may be constructed in the $\alpha\beta$-plane. The σ and σ_z lines are used to determine the corresponding real roots in the s- and z-plane, respectively.

Example 3.

To illustrate the outlined procedure for sampled-data systems, consider the two-variable system with two synchronized samplers, transfer functions

$$G_h(s) = \frac{1 - \epsilon^{-Ts}}{2}, \quad G_1(s) = \frac{K}{s+2}, \quad G_{-1}(s) = 0.4$$
$$G_2(s) = \frac{K_2}{s(s+1)}, \quad G_{-2}(s) = 0.5, \quad T = 0.1 \text{ sec.} \tag{35}$$

and block diagram of Fig. 4.

By applying the z-transform method, the equations describing the block diagram of Fig. 4 are

$$C_1(z) = \frac{[1 + G_hG_2(z)]G_1(z)}{f(z)} R_1(z) - \frac{G_hG_2G_{-2}(z)G_1(z)}{f(z)} R_2(z)$$
$$C_2(z) = -\frac{G_hG_1G_{-1}(z)G_2(z)}{f(z)} R_1(z) + \frac{[1 + G_hG_1(z)]G_2(z)}{f(z)} R_2(z) \tag{36}$$

$$f(z) = [1 + G_hG_1(z)][1 + G_hG_2(z)] - G_2G_1G_{-1}(z) \cdot G_hG_2G_{-2}(z). \tag{37}$$

When the z transfer functions indicated in equation 37 are found from equations 35, the characteristic equation $f(z) = 0$ has the following form

$$z^3 + (0.181\ K_1 + 0.005\ K_2 - 2.727)\ z^2 +$$
$$+ (-0.345\ K_1 + 0.0004\ K_2 + 0.00072\ K_1K_2 + 2.465)\ z$$
$$+ 0.1635\ K_1 - 0.00368\ K_2 + 0.00065\ K_1K_2 - 0.741 = 0 \qquad (38)$$

For the design purposes, the determination of the parameters K_1 and K_2 may be performed by factoring equation 38 in the $\alpha\beta$-plane where

$$\alpha = K_1\ ,\quad \beta = K_2\ . \qquad (39)$$

Attention is focused to the first linearized strip in the s-plane as shown in Fig. 5a. The complex roots are determined by mapping the $\zeta = \text{const}$ lines onto the parameter plane. By the z-transform, the constant damping line from the s-plane is mapped into a logarithmic spiral in the z-plane, as illustrated in Fig. 5b for the linearized strip. The real roots are determined by plotting σ_z lines onto the parameter plane according to Fig. 5b. Since the correspondence between Fig. 5a and 5b is simple and is given by equation 31, the factorization of equation 38 may be accomplished in either the s- or z-plane.

The corresponding parameter plane diagram is shown in Fig. 5. The ζ curves 0.2, 0.3, 0.4, and 0.5 are plotted on which the values of ω_n are interpolated. The σ_z lines are constructed and they correspond to the negative part of the real axis of the z-plane. To illustrate the factorization procedure, choose the point M(4.96;1.49). This point lies on the $\zeta = 0.5$ curve and $\omega_n = 1$. Therefore, the complex roots which lie on the straight line AB of the s-plane are determined using the first equation 33. The corresponding values of ω_z and ζ_z can be determined using equations 34.

By extrapolating σ_z lines, a real root in the z-plane has the value -0.083. Thus, according to equation 31, two additional complex pair of roots which lie on the straight line BC of Fig. 5a can be determined in the s-plane, and the factorization is completed.

When the roots are determined for the primary strip in the s-plane, the roots in the higher strips are determined using equation 31 as it was shown in reference 2. It may be noted, however, that the linearized response gives the exact response of the sampled-data feedback system for ranges of frequencies between zero and one-fourth the sampling frequency. For higher frequencies, the departure is insignificant due to the low-pass characteristics of the hold and plant following the sampler.

CONCLUSION

The parameter plane method is extended to a case when the coefficients of the characteristic equation are linear functions of two adjustable parameters and their product. The procedure is developed to plot the parameter plane diagram. After the diagram is plotted, the factorization of characteristic equations for different values of system parameters is performed without any calculation. If a digital computer is used to plot the necessary curves, the extended method achieves the same degree of simplicity as does the method in its primary form.

REFERENCES

1. D.D. Šiljak, Analysis and Synthesis of Feedback Control Systems in the Parameter Plane - Part I, Linear Continuous Systems, IEEE Transactions, pt. II (Application and Industry), Vol. 83, No. 75, Nov. 1964, pp. 449-458.
2. D.D. Šiljak, Analysis and Synthesis of Feedback Control Systems in the Parameter Plane - Part II, Sampled-Data Systems, ibid., pp. 458-466.

3. D.D. Šiljak, Analysis and Synthesis of Feedback Control Systems in the Parameter Plane - Part III, Nonlinear Systems, ibid., pp. 466-473.

4. M.R. Stojić, Sampled-Data Control Systems with Transport Lag by the Parameter Plane Method, (to be published).

5. L.D. Nace, Application of Mitrovic's Method to Feedback Compensation of Sampled-Data Control Systems, Master Thesis, USN Postgraduate School, Monterey, California, 1965.

6. J.B. Moore, Steady-State Response in the Parameter Plane, (to be published in the same issue).

7. M.R. Stojić and D.D. Šiljak, Sensitivity Analysis of Self-Excited Oscillations in Nonlinear Control Systems, International Simposium on Sensitivity Analysis, Session on Sensitivity and Stability, Dubrovnik, Yugoslavia, Sept. 1964.

8. M.R. Stojić and D.D. Šiljak, Sensitivity Analysis of Self-Excited Nonlinear Oscillations, Joint Automatic Control Conference, Paper No. 467, Troy, New York, June 22-25, 1965.

9. E.P. Popov and I.P. Palitov, Approximate Methods for Analyzing Nonlienar Automatic Control Systems (book in Russian), State Press for Physics and Mathematical Literature, Moscow, 1960.

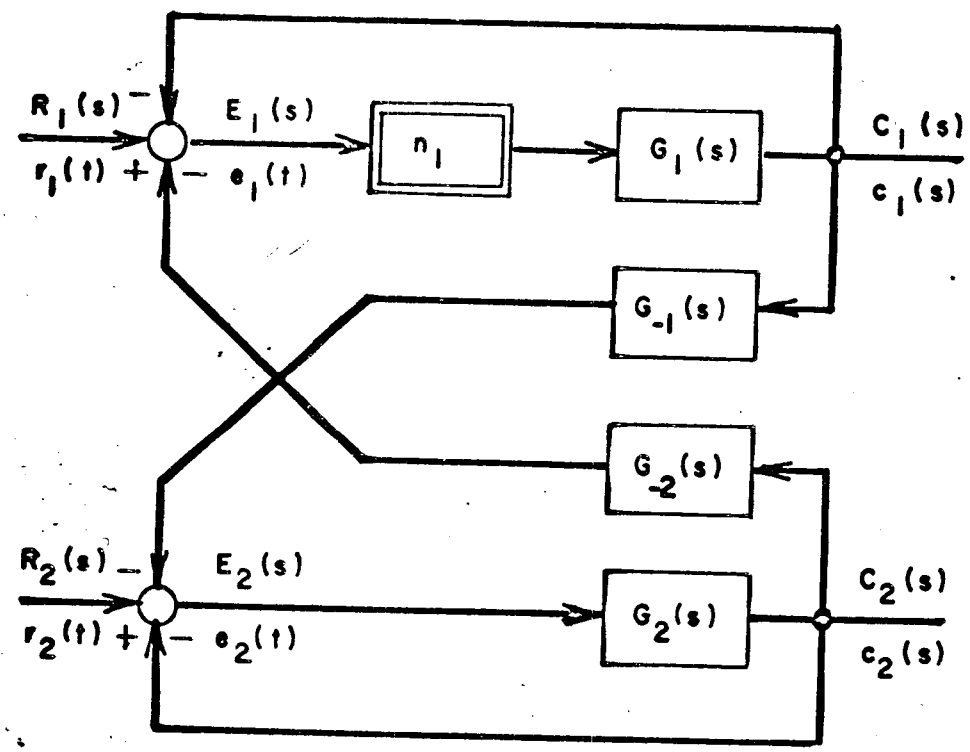
R1(s)
r1(t)
E1(s)
e1(t)
n1
G1(s)
C1(s)
c1(s)
G-1(s)
G-2(s)
R2(s)
r2(t)
E2(s)
e2(t)
G2(s)
C2(s)
c2(s)

Fig. 1

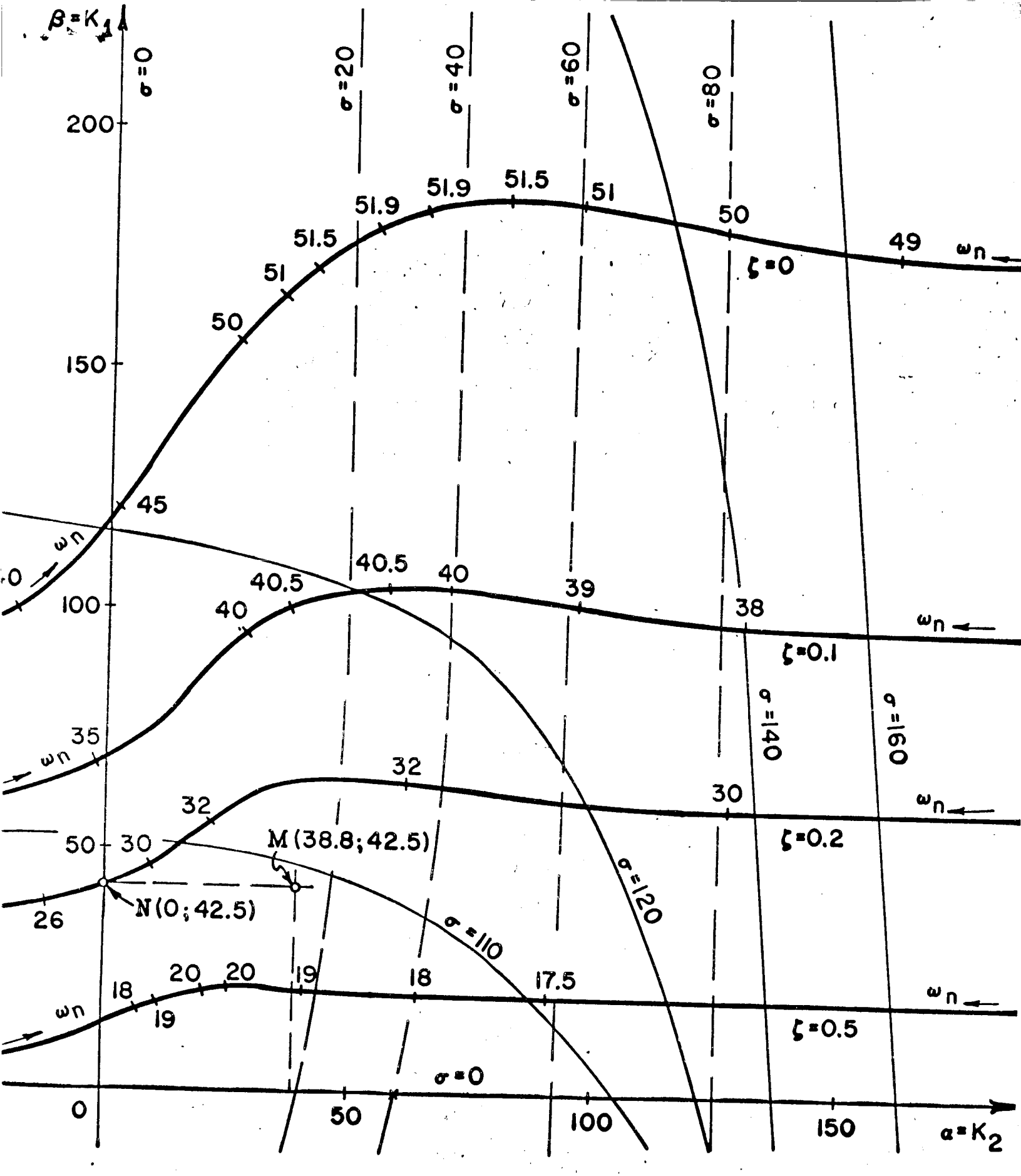
β=K1
σ=0
σ=20
σ=40
σ=60
σ=80
σ=140
σ=160
σ=120
σ=110
σ=0
200
150
100
50
0
50
100
150
α=K2
51.9
51.9
51.5
51.5
51
51
50
50
49
ωn
ζ=0
45
ωn
40.5
40.5
40
40
39
38
ωn
ζ=0.1
35
ωn
32
32
30
30
ωn
ζ=0.2
M(38.8;42.5)
N(0;42.5)
26
20
20
19
19
18
18
17.5
ωn
ζ=0.5

Fig. 2

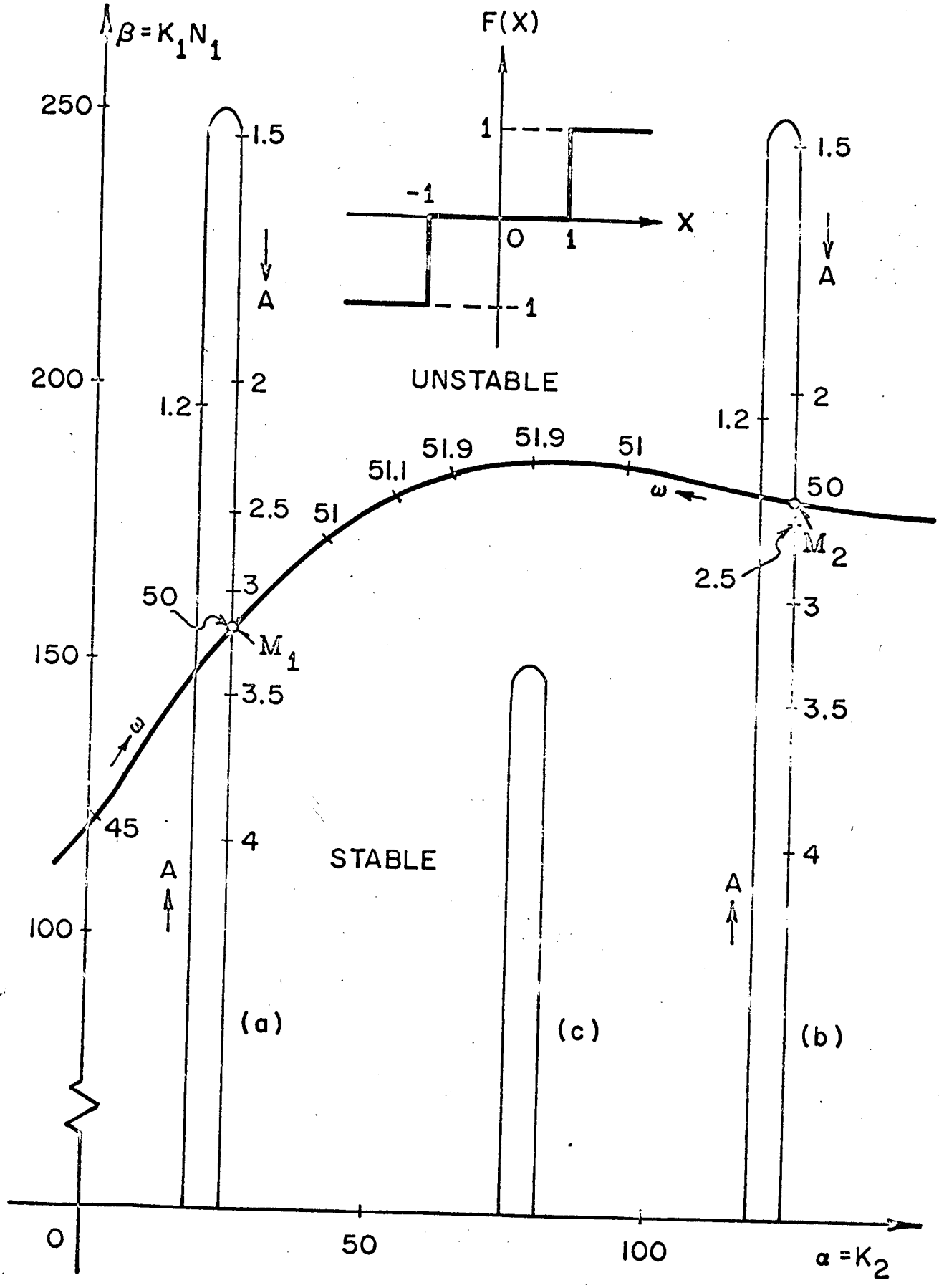
β = K1N1
250
200
150
100
0
50
100
α = K2
F(X)
1
-1
X
0
1
-1
UNSTABLE
STABLE
1.5
2
2.5
3
3.5
4
1.2
A
50
45
51
51.1
51.9
51.9
51
ω
M1
M2
(a)
(c)
(b)

Fig. 3

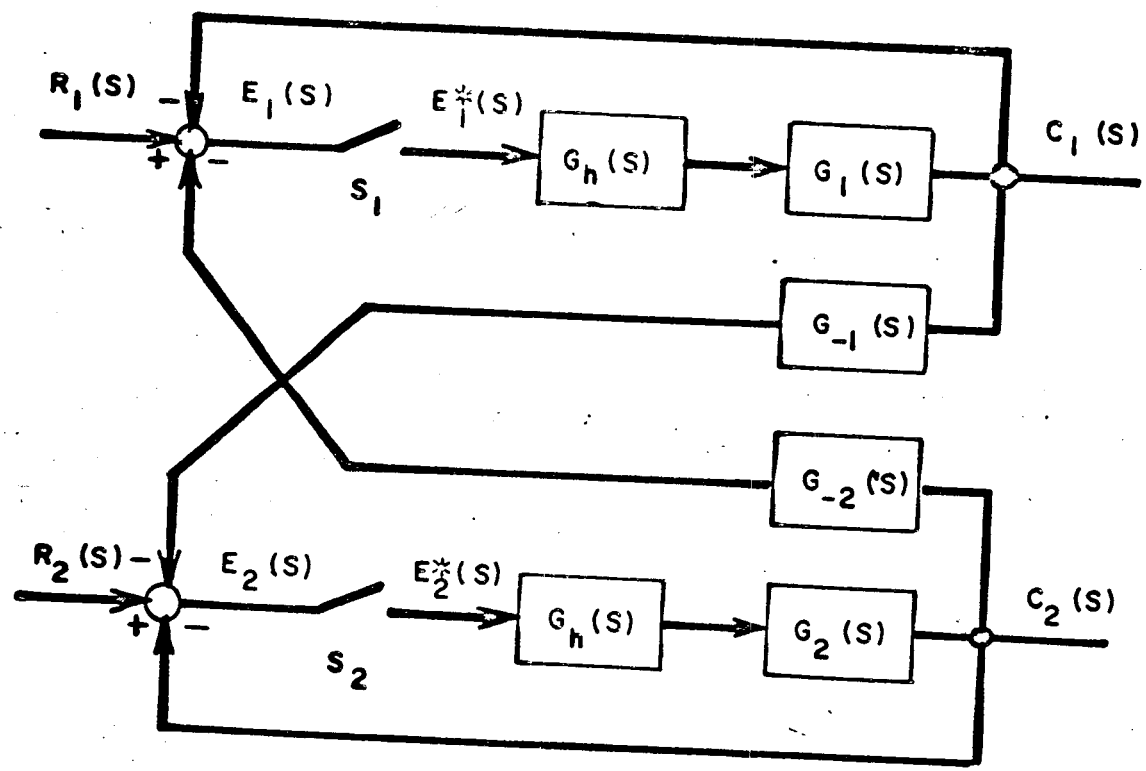

100 # 00

Fig 4

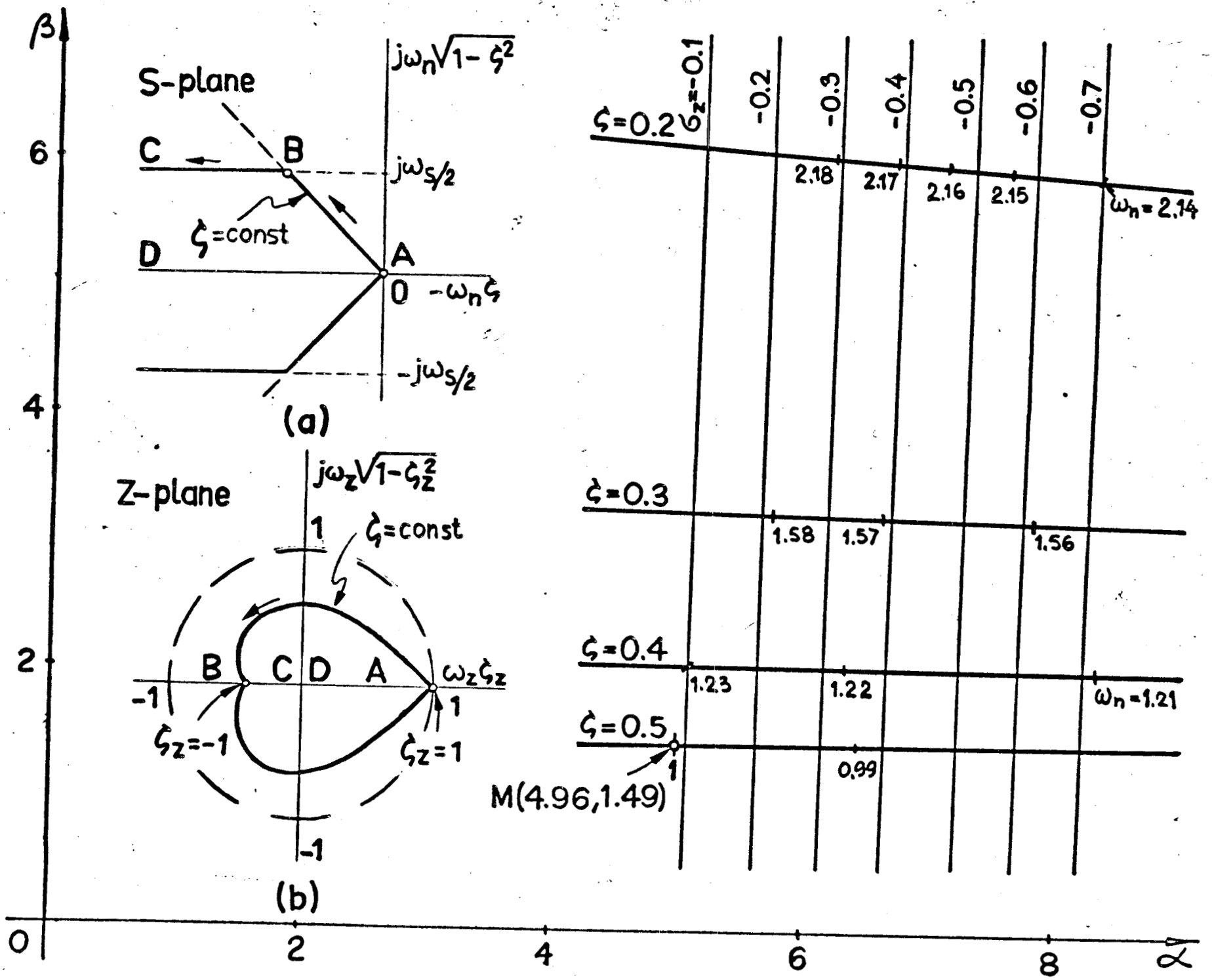
β
S-plane
$j\omega_n\sqrt{1-\zeta^2}$
C
B
$j\omega_s/2$
ζ=const
D
A
0
$-\omega_n\zeta$
$-j\omega_s/2$
(a)
Z-plane
$j\omega_z\sqrt{1-\zeta_z^2}$
1
ζ=const
B
C
D
A
$\omega_z\zeta_z$
-1
1
ζ_z=-1
ζ_z=1
-1
(b)
ζ_z=-0.1
-0.2
-0.3
-0.4
-0.5
-0.6
-0.7
ζ=0.2
2.18
2.17
2.16
2.15
ω_n=2.14
ζ=0.3
1.58
1.57
1.56
ζ=0.4
1.23
1.22
ω_n=1.21
ζ=0.5
1
0.99
M(4.96,1.49)
0
2
4
6
8
α

Fig. 5