SPECTRAL SCANNING AS A MECHANISM OF COLOR PERCEPTION

by

George Biernson

FACILITY FORM 602

N66 82431
(ACCESSION NUMBER)

16
(PAGES)

CR 74108
(NASA CR OR TMX OR AD NUMBER)

(THRU)

none
(CODE)

(CATEGORY)

Applied Research Laboratory
Sylvania Electronic Systems
A Division of
Sylvania Electric Products Inc.
Waltham Mass.

SPECTRAL SCANNING AS A MECHANISM OF COLOR PERCEPTION

George Eliason

Applied Research Laboratory
Sylvania Electronic Systems
A Division of Sylvania Electric Products Inc.

ABSTRACT

In perceiving color the eye performs a wavelength discrimination process, which is analogous to the angular discrimination performed in a tracking radar. There are two basic principles for performing angular discriminations: (1) multiple detectors with different angular response characteristics and (2) a single detector which scans its response characteristic. Up to now it appears that only the multiple-detector approach has been applied to explain the phenomenon of color vision.

This paper postulates that the eye employs the scanning discrimination principle to perceive color. A wavelength-dependent effect within a cone of the eye causes light of different wavelengths to produce different spatial distributions of energy in the photodetector region. An electrical process scans across this photodetector region, producing a modulated waveform which defines the color information. The d-c value of the waveform gives the white information, the first harmonic gives the blue-yellow information, and the second harmonic gives the green-red information. The phase determines the difference between blue and yellow and between green and red. The waveform is demodulated in the retina to generate separate signals which produce the black-white, blue-yellow and green-red sensations.

SPECTRAL SCANNING AS A MECHANISM OF COLOR PERCEPTION

George Biernson

Applied Research Laboratory
Sylvania Electronic Systems
A Division of Sylvania Electric Products Inc.

INTRODUCTION

It is generally believed that the eye perceives color by means of different types of photo-sensitive receptors having different spectral response characteristics. Because of the three-dimensional character of color sensation and the constancy of color matches, the concensus of opinion is that the eye has three basic spectral response curves.

Many efforts have been made to calculate the spectral response curves of the eye, but they have all run into inconsistencies that have not received adequate explanation. Figure 1 gives, for example, the spectral response curves proposed by Koenig and Dieterici in 1884 (ref. 1). In fact, the whole field of color theory is filled with inconsistency, and this has prompted the continual generation of more elaborate color theories to explain (in the words of Troland) "the enigma of color vision."

Although the various color theories may vary greatly in detail, they appear to agree on one principle: every theory (as far as the author can determine) that has proposed a plausible mechanism for converting the optical energy into a neurological signal has assumed that the eye has different types of photo-sensitive elements having different spectral response characteristics. This paper suggests that that basic principle is incorrect.

PRINCIPLE OF ANGULAR SCAN

A fresh approach to attack the enigma of color vision can be found by examining analogous processes in electronic systems. In color vision, the eye performs a wavelength discrimination function, which is analogous to other discrimination functions performed in electronic systems. The most convenient one to consider is the angular discrimination used in radar systems in the operation of tracking a target.

As shown in Fig. 2, there are two basic approaches in radar to perform angular discrimination: (1) by the use of multiple radar detectors having different angular response characteristics, and (2) by the use of a single detector which varies (or scans) its angular response characteristic.

Figure 2a shows the multiple-detector approach. Detector A (which may consist of a waveguide horn feeding a crystal detector) is pointed along the upper dashed line and so has a peak response in that direction; while detector B is pointed along the lower dashed line. Along the solid horizontal axis which bisects the angle of the dashed lines, both detectors

have equal responses. To generate an angular discrimination signal, the signals from detector B is subtracted from that of detector A. The resultant angular discrimination signal is called an error signal because it is zero for a target along the horizontal axis (called the boresight), positive for targets above that axis, and negative for targets below that axis. For example, a target T_1 gives a positive error voltage and target T_2 gives a negative error voltage. For targets reasonably close to the boresight, the error signal is approximately proportional to the angular deviation (or error) of the target from the boresight.

Figure 2b illustrates the angular scanning approach. A single detector is oscillated through an arc, such that its direction of maximum sensitivity varies with time between the two dashed curves. The effect of this oscillation, or scanning, operation is to produce an amplitude modulation of the signal delivered by the detector. We are interested in the first harmonic of that modulation, which is at the frequency of the angular oscillation of the detector. For a target along the boresight, the first harmonic is zero; for a target above the boresight, such as T_1, the first harmonic has positive phase relative to the detector oscillation; whereas for a target below the boresight, such as T_2, the first harmonic has negative phase. The first harmonic has maximum amplitude if the target lies along one of the dashed curves; and in the vicinity of the boresight the amplitude of the first harmonic is proportional to the angular deviation of the target from the boresight.

The signal from the detector is amplified and the first harmonic is demodulated by a phase-sensitive demodulator which uses the detector oscillation signal as a reference. The demodulator delivers a d-c signal essentially equivalent to that which is delivered by the multiple-detector system of Fig. 2a.

Thus both approaches deliver essentially the same angular discrimination information, but there are some important differences. The multiple detector system is very difficult to keep in calibration because it requires two parallel amplifier channels, the gains of which must be kept matched. The scanning detector system is much simpler to build, but has the disadvantage that inaccuracies are produced if the signal from the target is modulated at a frequency close to the angular scan frequency. The angular scan system can be deceived by a jammer which modulates its return signal, and consequently modern radar systems now generally use the multiple detector approach despite its increased complexity.

Figure 3 shows how the angular oscillation, or scanning, of the detector modulates the detector signal. Diagram (a) shows the angular response patterns of the detector when it is at the extreme points in the oscillation cycle. The oscillation of the detector vibrates the pattern between the two curves. The angular positions of targets T_1 and T_2 are shown. It can be seen that as the pattern vibrates back and forth the signals produced by radar returns from targets T_1 and T_2 are modulated with opposite phase; i.e., while the signal due to target T_1 is increasing that due to target T_2 is decreasing. Diagram (b) shows the amplitude of the first harmonic of the a-c signal as a function of the angular deviation of the target from the boresight. The different signs indicate opposite phase of the a-c component.

Figure (3c) shows the detector signals produced by the radar returns from targets T_1 and T_2. They consist of a-c modulations about an average or d-c value, and are opposite in phase. If both targets were present simultaneously and produced radar returns of equal strength, the a-c components would cancel and the average value would be doubled. This would give the false impression of a single target along the boresight. This problem is avoided in most radars by a range gate that accepts only a single target return at a time.

It has been shown that there are two basic means of achieving angular discrimination: with multiple detectors having different angular response characteristics or by scanning the angular response of a single detector. When we examine other discrimination tasks in electronics we find that the same two principles are used. These include discrimination in time, frequency, distance, and many other parameters. It seems logical, therefore, that both approaches should be considered as possible means of explaining color vision. However, we find that previous color theories have applied only the multiple detector approach.

APPLICATION OF SCANNING PRINCIPLE TO COLOR VISION

Let us consider how the detector scanning principle might be applied to color vision. Assume that the detector oscillated its spectral response in the same manner as in angular scan. A monochromatic light would produce an a-c modulated waveform, just as does a single target with angular scan. A white spectrum of light would correspond to an infinite number of targets. The components due to the various wavelengths would cancel, and a d-c signal would be produced. Thus the average or d-c component of the signal delivered by the detector would correspond to the white sensation, and the a-c modulation component would correspond to the chromatic sensation.

There are two sets of basic chromatic sensations experienced in vision: blue-yellow and red-green, blue acting as the negative of yellow and green acting as the negative of red. This suggests that there are two different a-c modulation component in color vision, one component corresponding to blue-yellow and the other to green-red. The phase of a component would determine the difference between blue and yellow or between green and red. The two components could be kept separate by being at different frequencies or by being 90-degrees out of phase with respect to one another.

One of the problems associated with conventional radar angular scan is that the target echo must be present for a time longer than one cycle of the scan in order for the angular discrimination to be performed. However, in the analogous color vision situation, the eye is able to see color from a very short pulse of light, much shorter than any reasonable scan period. How then can the scanning principle be applied if this condition must be satisfied? A simple answer was proposed by Robert F. Lucy, an associate of the author. He postulated that the scanning process in color vision is performed subsequent to detection, rather than prior to detection as in angular scan.

Figure 4 shows diagrammatically how Mr. Lucy's principle would work. A prismatic effect within the cone separates the wavelengths of the incident light, such that different wavelengths are concentrated at different

regions of the photodetector portion of the cone. The light falling on the detector excites the photopigment and generates electric charges. An electrical scanning mechanism is employed in the cone to control the flow of charge. The scanning mechanism scans back-and-forth across the detector and feeds out the charges from different portions of the detector at different instants of time.

The prismatic effect probably does not separate the wavelengths discretely. Rather, it is more likely that it merely produces different distributions of energy across the photodetector for different wavelengths. Waveguide or interference patterns within the cone may be responsible for the prismatic effect. The scanning action could be produced by an oscillating electric field that controls the flow of charge from the photodetector.

An important question that pertains to the scanning process concerns the relationship between the blue-yellow and green-red modulations. In order for the scanning to be performed in the simplest manner, these modulations should be harmonically related. Evidence (which is beyond the scope of this paper) suggests that the blue-yellow signal is a first harmonic and the green-red signal is a second harmonic.

Figure 5a shows a first approximation of how the optical energy appears to be distributed across the photosensitive portion of the cone by means of the prismatic effect. The sketch shows the energy distributions for specific wavelengths in the violet, blue, green, yellow, and red portions of the spectrum. For convenience, the maximum energy distributions are normalized to unity. The horizontal axis labeled "position on cone" is purposely vague, because the author does not know whether the variation of energy is longitudinal, axial, or something else.

It is postulated that an electrical scanning mechanism scans back and forth across the photosensitive portion of the cone in a cyclic manner, as is indicated. The effect of this scanning is to produce the waveforms shown in Fig. 5b for the wavelengths corresponding to the energy distributions in Fig. 5a. The lower dashed waveform of Fig. 5b is produced by a mixture of two monochromatic lights, a red plus a violet, which combined to form a magenta color sensation.

Neglecting harmonics above the second, the yellow and blue wavelengths generate first harmonics of opposite phase, while the magenta (i.e., violet plus red) and green wavelengths generate second harmonics of opposite phase. For the particular wavelengths considered, blue, green, yellow, and magenta (i.e., violet plus red), simple waveforms are produced. Intermediate wavelengths generate both first and second harmonics. It is significant and desirable psychologically that magenta (which is a purple red) is a natural primary in this theory, rather than red, even though magenta is not a spectral color.

Evidence indicates that the waveforms are demodulated in the retina to form d-c signals of opposing signs which produce the blue-yellow and green-magenta (or green-"red") sensations. The waveforms are filtered to leave the average value, which gives the black-white, or luminosity, sensation.

reason the eye requires two scanning modes for color discrimination, whereas a radar system tracking a single target needs only one.

It was pointed out that a radar using angular scan can be deceived if the target transmits a jamming signal modulated at the angular scan frequency. If the eye receptor uses a scanning mechanism one would therefore expect that a similar deception might be achievable. This is indeed the case. When white light is modulated at frequencies in the range of 10 cps to 20 cps, chromatic sensations are produced which are called Fechner colors. The frequency at which Fechner colors are observed increases with light intensity, which appears to indicate that the eye increases its scan rate with increasing light intensity.

SUMMARY

Although the scanning principle is a standard approach for performing discrimination tasks in electronic systems, as far as the author can determine it has never been considered as a means of explaining the wavelength discrimination function performed by the eye in color vision. All previous theories of color that have proposed plausible means for converting light energy into neurological color signals appear to be based upon the multiple-detector principle of wavelength discrimination.

This paper has applied the scanning principle of discrimination to color perception and finds that it appears to provide a very simple explanation for "the enigma of color vision." Because this new theory of color is based upon a detection principle which is fundamentally different from that of previous color theories, it opens up an entirely new approach to the color phenomenon.

ACKNOWLEDGEMENT

The work reported herein was sponsored under the following contracts: AF-33(657)-8681 with the Air Force Systems Command, United States Air Force, and NASw-441 with the National Aeronautics and Space Administration.

REFERENCES

(1) Koenig, A. and Dieterici, C., "Uber den Empfindlichkeit des normalen Auges fur Wellenlongenunterschiede des Lichtes" Wiedem Ann. Physik u Chem., 20 p 579; 1884.

(2) Biernson, George, "A Uni-Receptor Theory of Color Perception," Research Report No. 203, Applied Research Laboratory, Sylvania Electronic Systems, Waltham, Mass., 14 August 1962.

4-1-0372

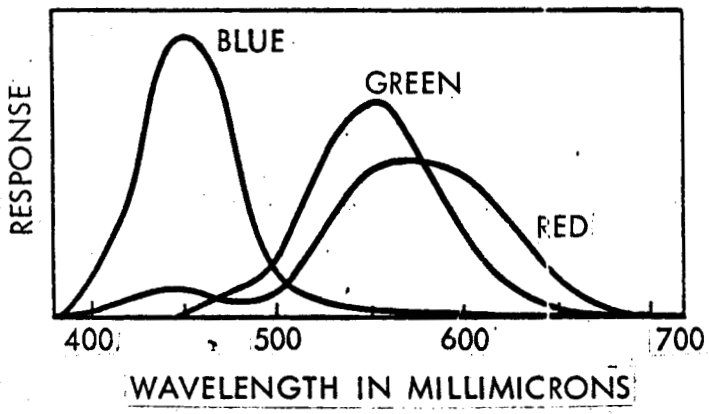

Figure 1. Theoretical Response Curves of the Eye Proposed by Koenig and Dieterici

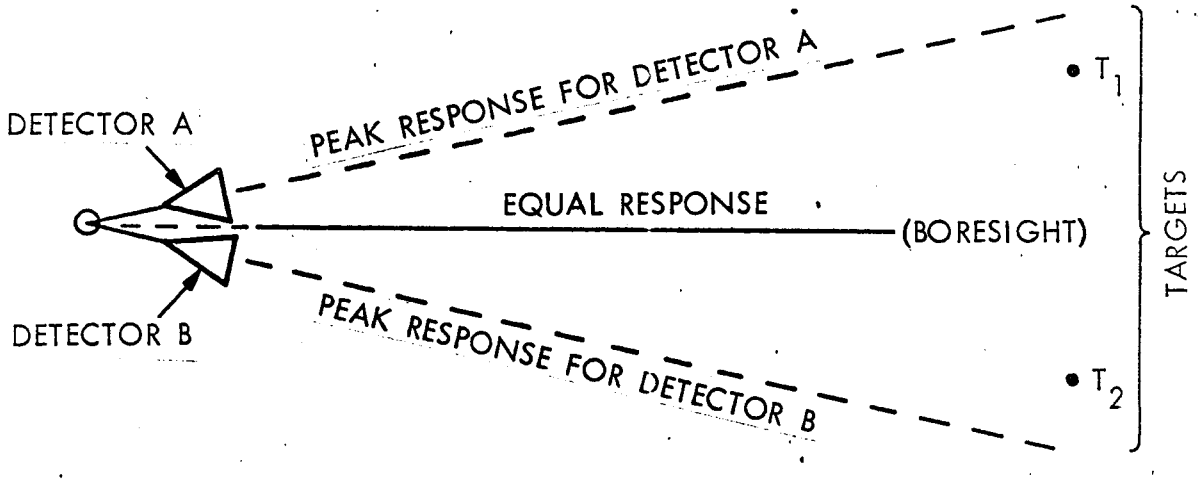

(A) DISCRIMINATION WITH TWO DETECTORS

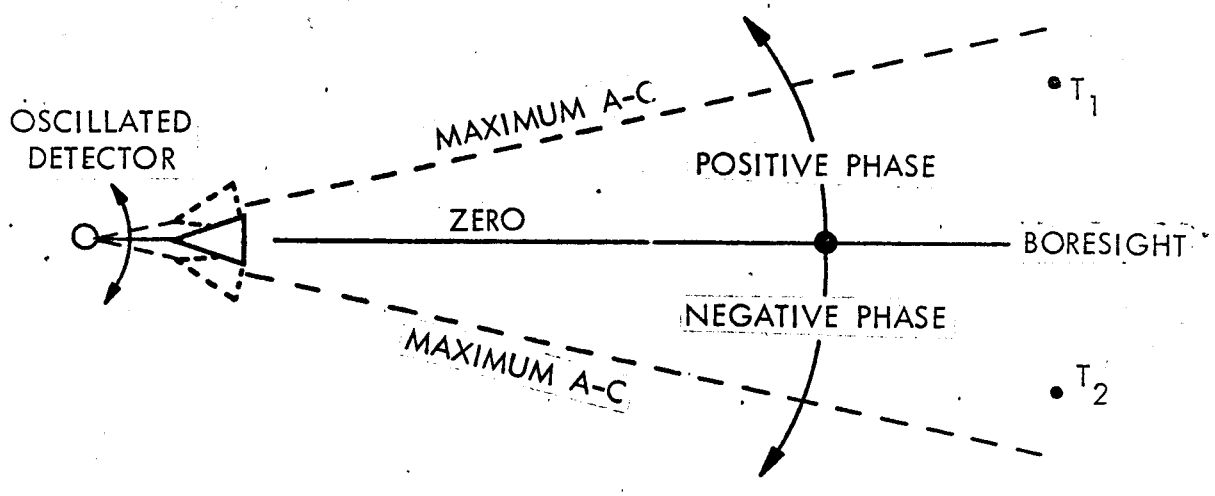

(B) DISCRIMINATION WITH SINGLE OSCILLATED DETECTOR

Figure 2. Two Basic Techniques for Angular Discrimination in Radar Systems

4-1-0375

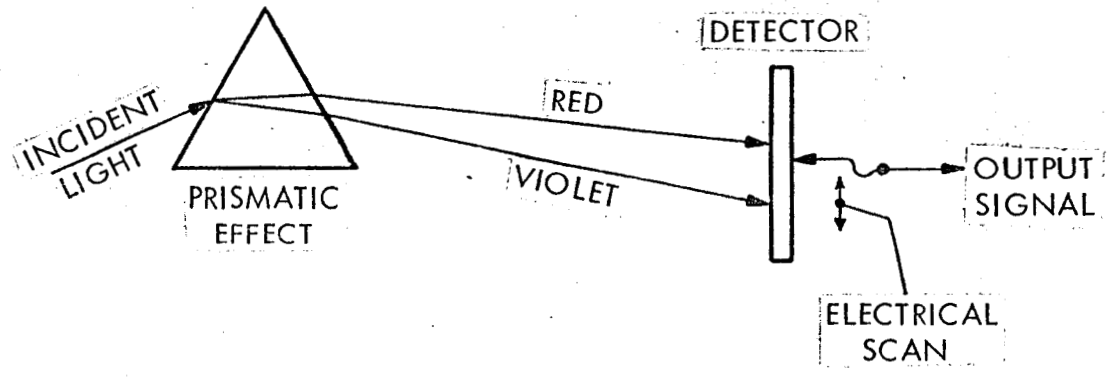

Figure 4. Conceptual Drawing Illustrating Principle of Spectral Scanning

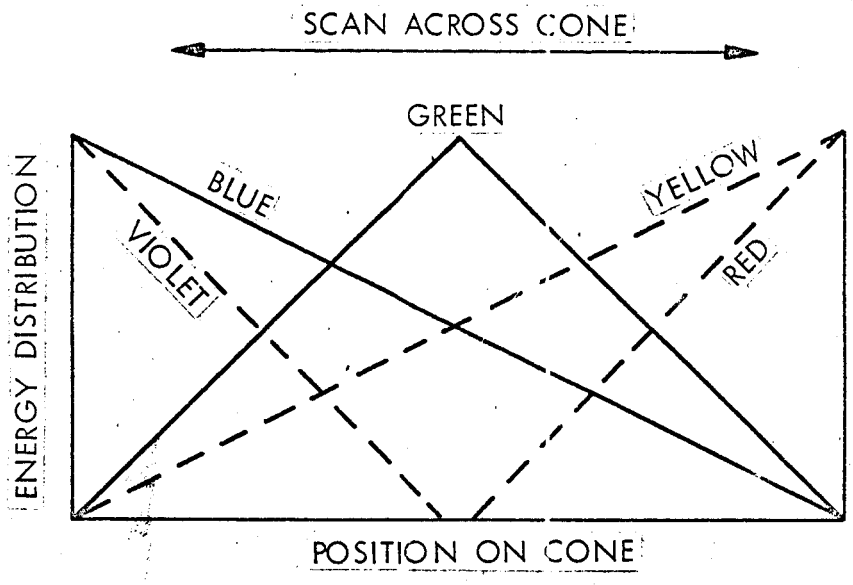

(A) ENERGY DISTRIBUTION ALONG PHOTOSENSITIVE PORTION OF CONE

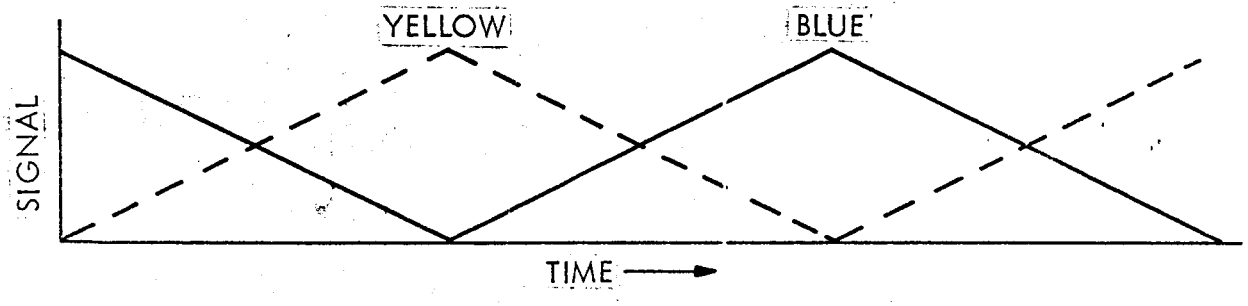

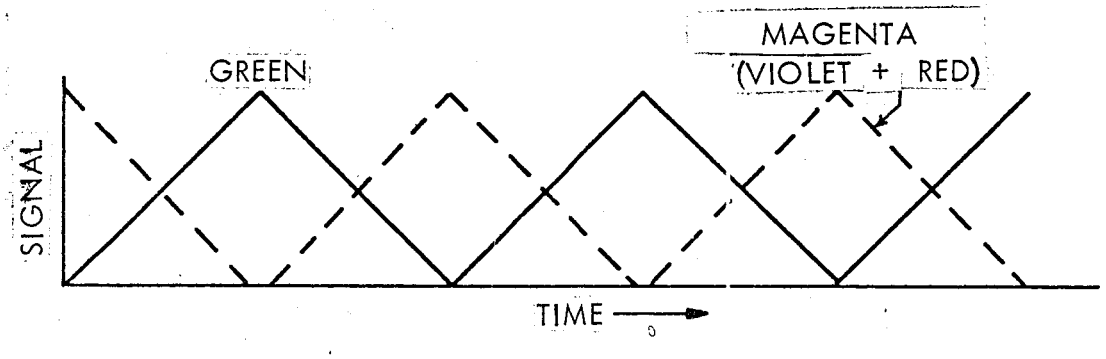

(B) SIGNALS DELIVERED BY CONE FOR VARIOUS WAVELENGTHS OF LIGHT

Figure 5. Approximate Sketches Illustrating Principle of Generation of Modulated Waveforms in Cone

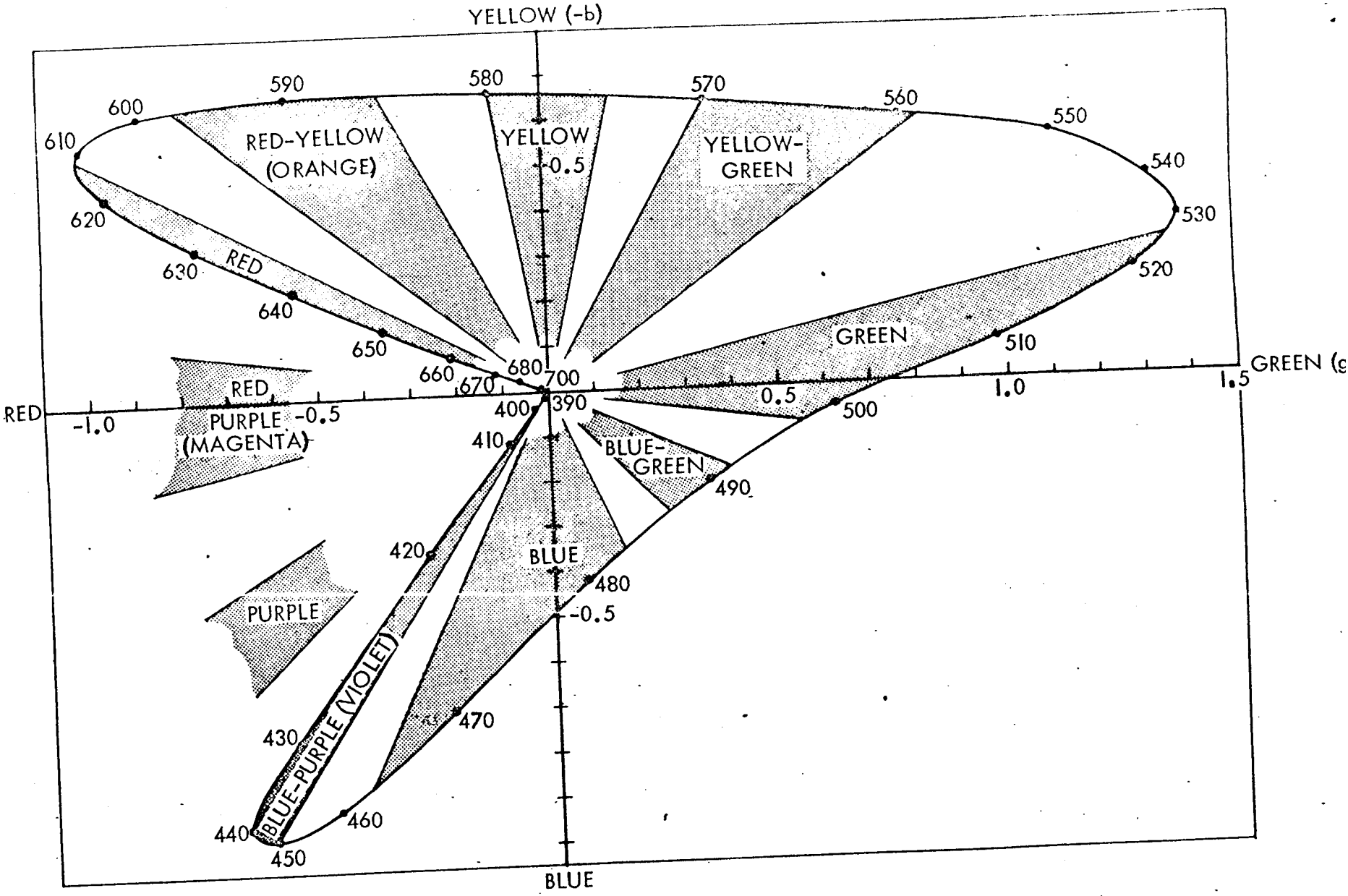

Figure 6. Plot of Yellow-Red A-C Component Versus Green-Blue A-C Component for Equal Energy Spectral Lights, with Wavelength as a Variable

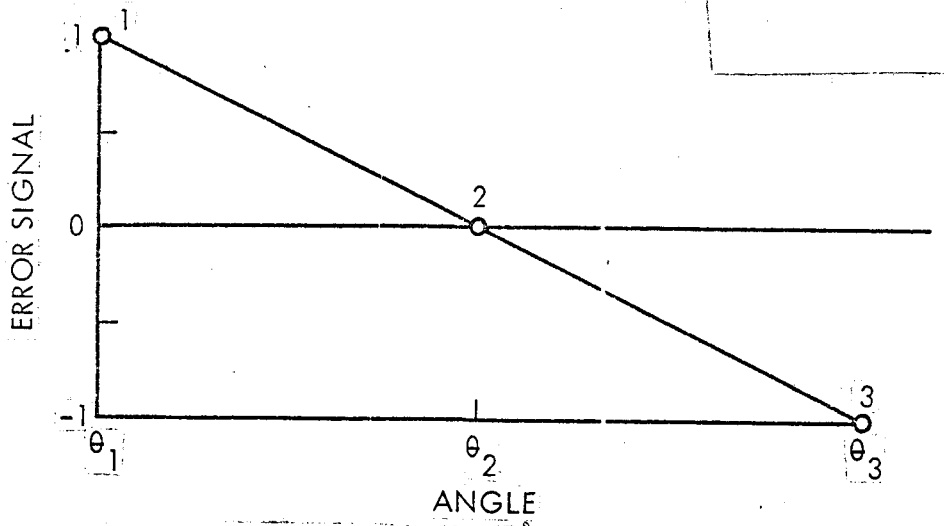

(A) ERROR SIGNAL FROM MODE A

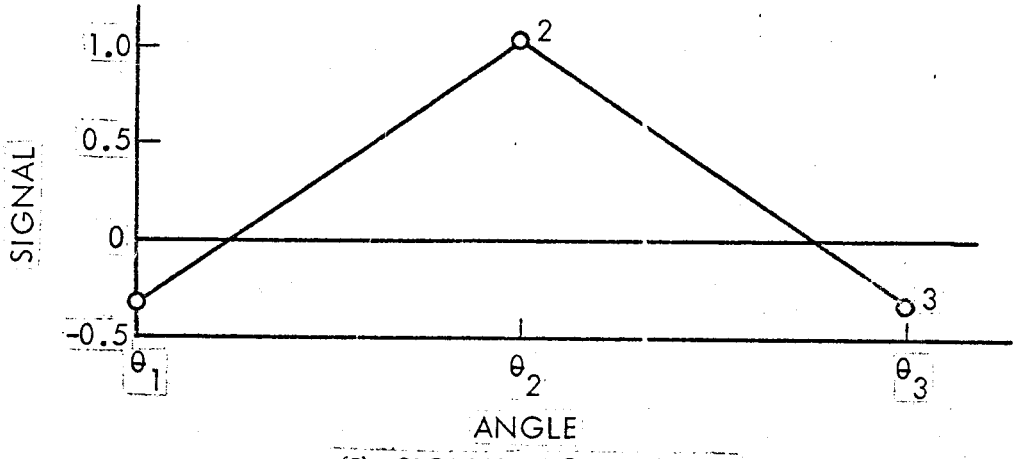

(B) SIGNAL FROM MODE B

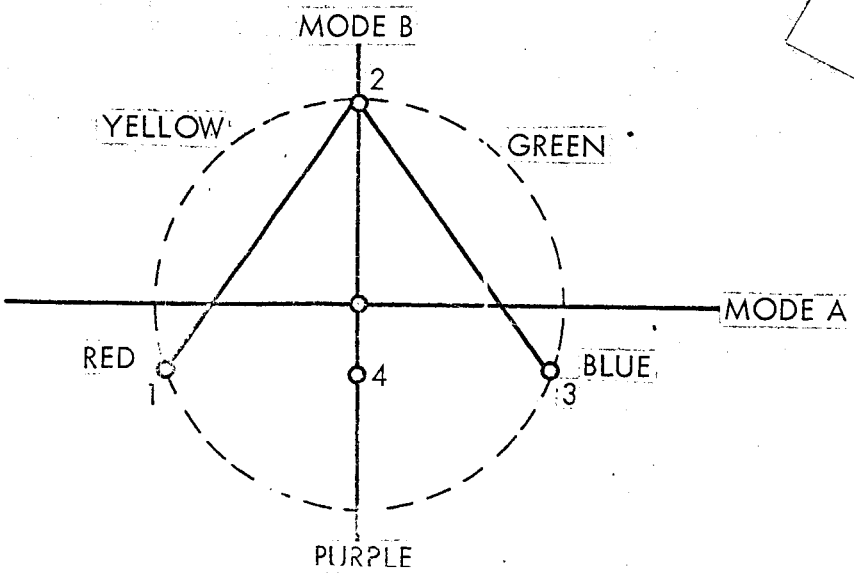

(C) PLOT OF SIGNAL FROM MODE B VERSUS SIGNAL FROM MODE A

Figure 7. Responses Needed for Radar to Track Multiple Targets, Related to the Color Wheel of the Eye