JET PROPULSION LABORATORY

Spec. No. RL-1-110
27 November 1961

INTRODUCTION

1.0 PURPOSE AND SCOPE

This Spacecraft Design Specification Book will provide a single source of information about Ranger Lunar Spacecraft for all missions after the fifth (RA-5), and will serve as a design tool and control document defining the system in general terms. It will be used to establish the design of systems, subsystems, and the over-all spacecraft; in the dissemination of design changes to all persons concerned. Each segment of information in the book shall be firm, to the extent possible, at the time of publication. This book will not include information other than Spacecraft flight equipment. The use of the word mission refers to a single launching. This book shall start with mission P-53 (previously referred to as RA-6). Specifications currently being generated are covering P-53, 54, 55, and 56 (RA-6, 7, 8, and 9); they are referred to as follow-on specifications.

These follow-on specifications are designated with the prefix RL. The basic spacecraft is standard and changes to the functional specifications describing it are expected to be few and minor. Each different mission will, however, result in certain functional specifications applicable to that mission only. Wherever possible, functional specifications applicable to the basic spacecraft shall be written so as to minimize possible changes to them because of differences in use or particular mission.

Each book shall consist of four principal sections:

1) Introduction
2) Mission Objectives and Design Criteria
3) Design Characteristics and Restraints
4) Functional Specification

1.1 Mission Objectives and Design Criteria

This section provides ground rules, guidelines, and a definition of the general design philosophy; it also establishes an order of priority among competing criteria. The material will include only design criteria that have been established at least on a preliminary basis, rather than a discussion of alternate methods. This section will not contain information on results of detail design planning or scheduling. This section will be the responsibility of the Program Office.

1.2 Design Characteristics and Restraints

In general, this section explains how the design objectives will be met. All design restraints will be covered in this section, such as those resulting from the vehicle, packaging, environment, and scientific experiments. It is essentially a picture of the current spacecraft design, in sufficient detail so that functions of the systems and subsystems can be identified. Sections 2 and 3 of the book will provide an orderly progression for the preparation of the functional specifications of Section 4. Section 3 will also include general operational and configuration descriptions, sequences, and performance characteristics. Section 3 will be the responsibility of the Systems Division and will not include information on scheduling, test plans, or design mechanization.

1.3 Functional Specifications

The functional specifications describe what the systems and subsystems are intended to do, in general terms, including all functions and interactions. They contain system and subsystem block diagrams, provide applicable transfer functions, describe the intended sequence of functions in operation of the spacecraft, allocate units of variance for error sources, and delineate system and subsystem boundaries in sufficient detail so that identification with cognizant design groups can be made and interface control maintained. Functional specifications should be written in engineering language for each system and subsystem and each must perform the following:

a. Define the boundaries of the system or subsystem.

b. Describe the functions that the system or subsystem performs.

c. Set the limits or tolerances within which the system or subsystem must perform.

d. Identify the input and output interaction elements so that the associated systems and subsystems can be designed.

The functional specifications will contain no information on schedules, test plans, detail component design, environmental suitability or qualification, or quality control. These functional specifications will be prepared by the cognizant groups in each area and reviewed by the Systems Division for compatibility before incorporation in the book.

1.4 Specification Designation.

a. RL Specifications. RL Specifications apply to all Ranger Lunar follow-on missions; they shall contain basic, standard, and general engineering information pertinent to mission P-53 on.

b. Upgrading Specifications. RL specifications may be upgraded by change letters as "Change A". The "A" follows the full specification number in the normal manner. A change in an RL specification for a particular mission only, shall require a separate specification with a new number.

1.4.2 Ranger Functional Specifications will use a 3 - group coding as follows:

Code group	1	2	3
eg:			
Spec. number	RL	4	110

Code Group 1. In code group 1 (RL) designates Ranger Lunar follow-on specification.

Code Group 2. Code group 2 identifies that particular section of the specification book in which the specification should be inserted. Section 4, for example, indicates the "functional specification section".

Code Group 3. This three-digit group serves two purposes, identifying the specification by JPL divisions and by specification number. The first digit of the group represents the JPL organizational division responsible where:

1 = Systems Division

2 = Space Science

3 = Telecommunications

4 = Guidance and Control

5 = Engineering Mechanics

6 = Propulsion

The last two digits indicate the

specification number, starting at 10 and increasing in increments of 10 for each system, and in units for each subsystem. Thus, the number 110 indicates the specification is the responsibility of the Systems Division and is the first such specification in that division's series. The next specification that is a subsystem of 110 would be numbered 111, etc. The next system specification would be 120, then 130, etc.

1.5 Additional Copies

Additional copies of individual specifications contained in this book may be ordered by specification number from the Internal Distribution Center (IDC).

2.0 Specification Changes.

Any changes to the Spacecraft Design Specification shall be requested in writing, to the Spacecraft Project Engineer, and supported by sufficient engineering justification.

(Insert in Spacecraft Design Specification Book)

APPROVED:

Project Manager: J. D. Burke

JET PROPULSION LABORATORY

Spec. No. RL-2-110
8 November 1961

MISSION OBJECTIVES AND DESIGN CRITERIA
RANGER P-53 THROUGH P-56 SPACECRAFT
(RA-6 through RA-9)

1.0 INTRODUCTION

1.1 The primary purpose of Ranger flights 6 through 9 is to obtain high-resolution lunar surface pictures. To meet this objective it is intended to exploit the launch vehicle, spacecraft, and ground systems developed in the first five flights, together with a TV subsystem using components developed in other programs.

1.2 It will be a design objective to minimize changes to the basic spacecraft bus, relative to the RA-345 configuration, and the design shall include provisions for utilizing the RA-5 bus for a TV flight if required.

1.3 In addition to scientific exploitation of the TV pictures, other scientific experiments, selected to have a bearing on the problems of manned flight to the moon, will be carried on a basis of noninterference with the TV mission. A radio ranging experiment will be incorporated on like basis in flights 8 and 9.

2.0 Mission Objectives

2.1 Flights 6 through 9 are planned as repeated attempts at a single main objective; namely the obtaining of TV pictures of the lunar surface, with definition sufficient to aid in design of manned lunar vehicles,

at a date early enough to be effective in said design, and preferably at locations on the Moon near the intended point of manned landing. Other experiments that can and should be carried must not divert attention from this primary goal.

3.0 Design Criteria

Design criteria applicable to the spacecraft bus and TV subsystem for Ranger flights 6, 7, 8, and 9 are described in the following subparagraphs.

3.1 Spacecraft bus criteria.

3.1.1 Changes relative to the RA-345 bus configuration are to be made only as required to accommodate the TV package with a simple interface, to permit the incorporation of the noninterfering experiments, or to incorporate mandatory engineering change orders resulting from RA-345 experience. All changes not previously covered by ECR must be requested by ECR. Wherever possible, JPL preferred parts must be used on all new units introduced on, and unique to, RA 6, 7, 8, and 9.

3.1.2 Competing characteristics shall be treated in the following order:

a. Reliability of subsystems in order of importance as shown:

1) Terminal-phase TV transmission.

2) TV system failure-detection telemetry.

3) Impact location determination.

4) Terminal-phase orientation and attitude stabilization.

5) Bus functions prior to terminal phase (separation, stabilization, midcourse maneuver, etc.) as checked out in previous flights.

6) Bus failure-detection telemetry.

7) Passenger experiments and associated data handling systems.

b. Compatibility of TV package and bus.

c. Schedule.

d. Suitability of designs and documentation for continued exploitation of Ranger after flight 9, using minimum JPL effort.

e. Cost.

f. Biological sterility.

3.1.3 Defined Characteristics.

a. Weight. The gross weight of the spacecraft is not listed above as a competing characteristic because its value will be fixed by available vehicle performance and the trajectory chosen. The desired approach to the weight problem is to try to minimize weight of each component and then abandon plans to fly some components if necessary to reduce the total weight. If the spacecraft, with all desired components, is underweight, the performance excess will normally be taken in terms of an altered trajectory or increased propellant residuals to obtain higher reliability and/or greater accuracy of injection. Ballast will normally not be used except if required for balancing the spacecraft. The weight allowance for the TV subsystem has been fixed at 315 pounds. (Refer to Functional Specification Design Parameters.)

b. Effect on Agena B Stage. It is a general spacecraft design criterion that changes required on the Agena B relative to a standard, contemporary Air Force vehicle shall be held to the absolute minimum necessary to achieve the mission. Reliability, cost, and schedule assurance are all involved in this decision; therefore, it is a most important constraint.

3.1.4 Experimental Philosophy Affecting Design.

a. Environmental control prior to final mating with vehicle on launcher. The spacecraft and its components shall not be subjected to environments beyond flight-acceptance levels and the burden of protection shall be on operators and facilities rather than on the spacecraft itself. Clean, air-conditioned working areas, special handling fixtures, air transport, electrical overload protection, and other such measures external to the spacecraft shall be used to the extent practical, and the spacecraft design shall be based primarily on environments expected from the time of final mating onward through launching and flight. Biological sterility shall be achieved by external measures where possible, so that the adverse effect of the sterility requirement on equipment design, reliability and schedule is minimized.

b. Operating Condition at Launch. A list of contingencies will be prepared, under which decisions can be reached, in advance of the event, as to policy on holding, scrubbing, or launching with known inoperative components. In general, the design criterion should be that successful flight depends mainly on functional reliability of the subsystems from the end of hangar checkout onward, rather than on instrumentation, control, and correction of deficiencies in the spacecraft after mating with the launch vehicle.

Atlas-Agena B operations require that the spacecraft function unattended for many hours before a shoot, and also for an hour or more after a late hold or scrub. During this period, instrumentation beyond normal telemetry and essential power-system controls is undesirable. Operating procedures will restrict on-pad testing to tests of a system-verification nature. Subsystems must be designed to hold calibration and must be completely checked and calibrated before leaving the hangar.

c. In-flight Failure Detection. In keeping with the main objectives of these firings, failure detection is desired on the basic functional systems. However, since the number of modes of failure exceeds the number of measurements available, an artful programming of the failure-detection system will be required to obtain unambiguous, reliable data, preferably from redundant sources, on vital elements without losing entirely the chance of detecting failures in less important (and possibly less reliable) elements. As a general criterion, the quality of failure detection available should more or less parallel the importance of the subsystems as given in paragraph 3.1.2 above.

d. Function After In-flight Failure. After a successful injection and separation of the spacecraft, omnidirectional tracking capability is required (within practical limits).

Every subsystem in the spacecraft depends on others for its function and, therefore, the question of flight function after failure arises. The general design criterion is that no subsystem is required to function after failures of subsystems on which it depends, except insofar as can be achieved without complicating the design or diverting effort from the main objectives of the flight.

In the event that the spacecraft is injected and functioning, but not on a trajectory that will take it to the Moon, the experiment becomes another long-life, long-range test of the system and, therefore, the attitude-control, power, and communication subsystems should be designed for this condition as far as is practical without compromising the primary lunar objective.

Design provisions should permit operation of the TV system during its normal time interval for an engineering test, regardless of the trajectory attained.

3.2 TV Subsystem Criteria.

1) Terminal-phase video transmission.
2) Limiting optical resolution.
3) Camera sequencing and control.
4) Failure-detection telemetry.
5) Schedule.
6) Cost.
7) Biological sterility.

4.0 Priority of Scientific Experiments.

Priority of scientific experiments is as follows:

1) Tissue equivalent ion chambers (shielded and unshielded).
2) Ion chamber (standard).
3) Radiation counters.

5.0 Test Philosophy Affecting Design.

In all areas where the design is influenced by the type of test program planned, the design criterion shall be that first preference is given to designs that can be analyzed, and that testing is resorted to primarily for the purpose of confirming analysis or resolving system interactions. When subsystem qualification tests are the only way of determining readiness for assembly and flight, the design must of course, incorporate the necessary test provisions. In general, however, the objective is to obtain reliability by design rather than by testing. In system tests, the purpose is primarily to simulate flight operation. The burden of simulation shall, as far as possible, fall on equipment external to the spacecraft.

(Insert in Spacecraft Design Specification Book)

APPROVED:

System: M. K. Minnard

JET PROPULSION LABORATORY

Spec. No. RL-3-110 A

12 February 1962

SUPERSEDES:

JPL Spec. RL-3-110
3 January 1962

P53 (RA-6), P54 (RA-7), P55 (RA-8), AND P56 (RA-9) SPACECRAFT DESIGN CHARACTERISTICS AND RESTRAINTS

DESIGN CHARACTERISTICS

✱ DENOTES CHANGE

Note: P36 (RA-5) will be subject to this specification if the mission for P36 is chosen to be the high-resolution television experiment.

1.0 Operational Description

The primary functional operations of the Ranger spacecraft include attitude control, power, communications, and environmental control. Immediately after injection, the spacecraft is separated from the Agena propulsion stage. The Agena B will be retarded by a retro thrust to prevent its interference with normal operation of the spacecraft functions as well as eliminating the possibility of impacting on the Moon. The solar panels are erected and the communication antenna is rotated to a preset hinge angle. The attitude-control system is activated and solar sensors point the roll axis of the vehicle toward the sun, thus placing the solar power system in operation. The vehicle then turns about the roll axis until the antenna beam points toward the earth. Upon earth acquisition by an optical sensor, which is mounted on and moves with the antenna, the high-gain communication link is established. The spacecraft then continues to coast with its roll axis pointed toward the sun and its communication axis pointed toward the earth.

The midcourse maneuver accomplished by the spacecraft will correct for initial injection dispersions. After ground tracking and computation, the midcourse maneuver will be commanded from the Goldstone Tracking Site. The vehicle will turn to the prescribed angle in space, perform the correction of thrust, and then return to its sun and earth orientation as before.

The spacecraft will be required to perform a terminal maneuver. This maneuver will aline the TV camera axis for high-resolution pictures of the moon.

2.0 Configuration Description

The Ranger system utilizes an Atlas booster, or first stage, an Agena B second stage, and the JPL Ranger spacecraft. The basic configuration of the Ranger 6 - 9 spacecraft consists of a hexagonal frame containing the electronics packages, the erectable solar-power panels, a television experiment superstructure containing the cameras, sequencers, transmitters and power sources, and a movable parabolic communications antenna. Figures 2-1, 2-2, and 2-3 illustrate the basic configuration and major assemblies.

The Atlas/Agena vehicle configuration is described in the JPL Agena Study Report (Secret) to NASA Headquarters, Re-order No. 60-29.

3.0 Sequences

3.1 General Description: Operational Sequence (Figures 3.1-1, 3.1-2, 3.1-3 and 3.1-4)

3.1.1 RA 6 - 9 Operational Sequence

a. In the launch mode the spacecraft is initially confined within the shroud. During the boost phases it must tolerate the environment of vibration, shock, and high temperature due to aerodynamic heating. After the Atlas sustainer burns out the shroud is ejected. After a brief Agena ignition and burn there is a coast period. There is a re-ignition and burn after which the spacecraft is separated from the Agena.

b. After separation, the spacecraft goes into an acquisition operation. Solar panels and antenna are erected to a preset angle. The sun is then acquired. Until the sun is acquired, power is derived from a battery. The spacecraft then turns about the roll axis until the earth is acquired.

c. Maintaining the sun and earth attitude, the spacecraft goes into the cruising mode. If due to some unforseen event such as meteoritic impact the solar lock is lost, the machine will go into an acquisition mode. Power is again sustained during this mode by a battery.

d. After a suitable tracking period, the required midcourse maneuver commands are computed at JPL and then sent to Goldstone. After checking, the midcourse maneuver commands are transmitted to the spacecraft.

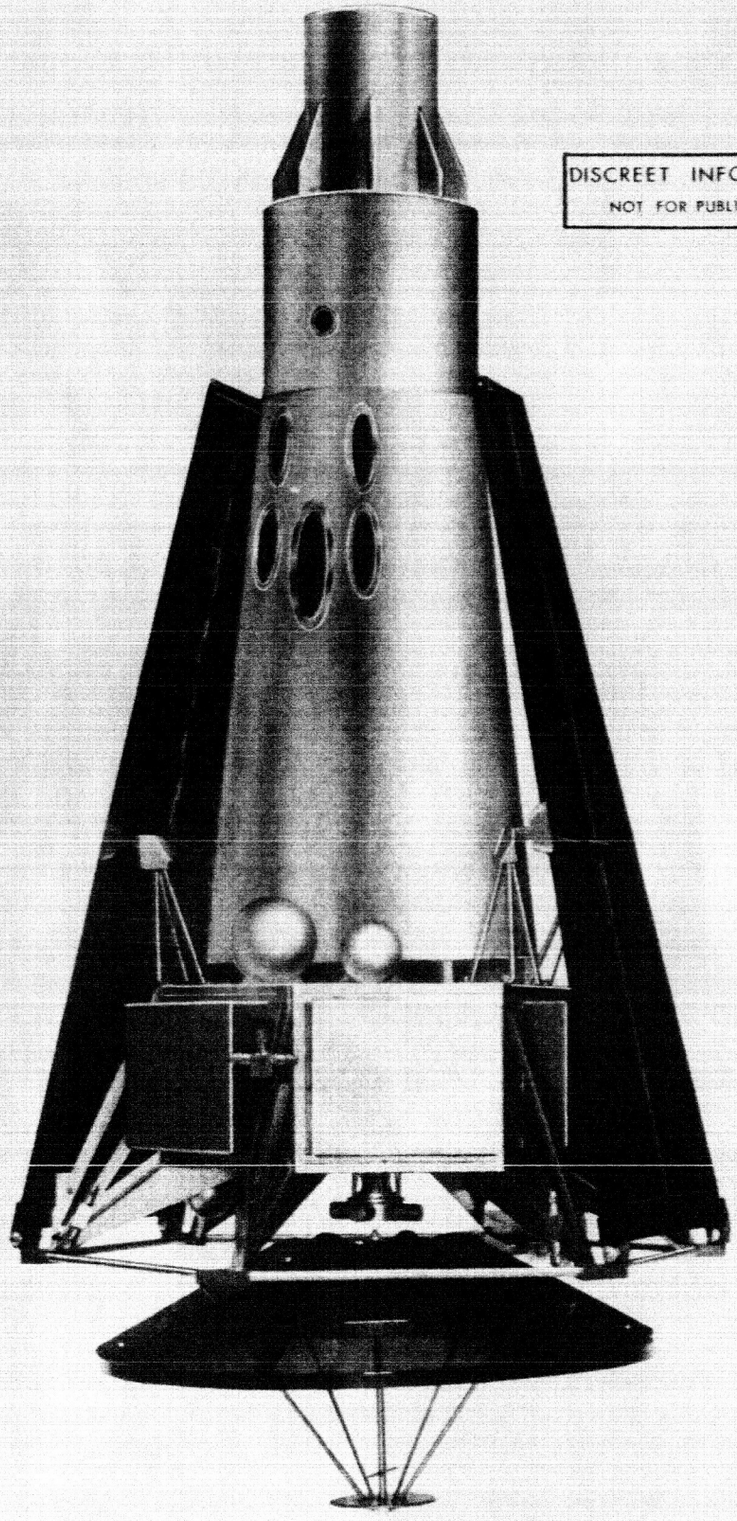

DISCREET INFORMATION
NOT FOR PUBLICATION

Figure 2-1

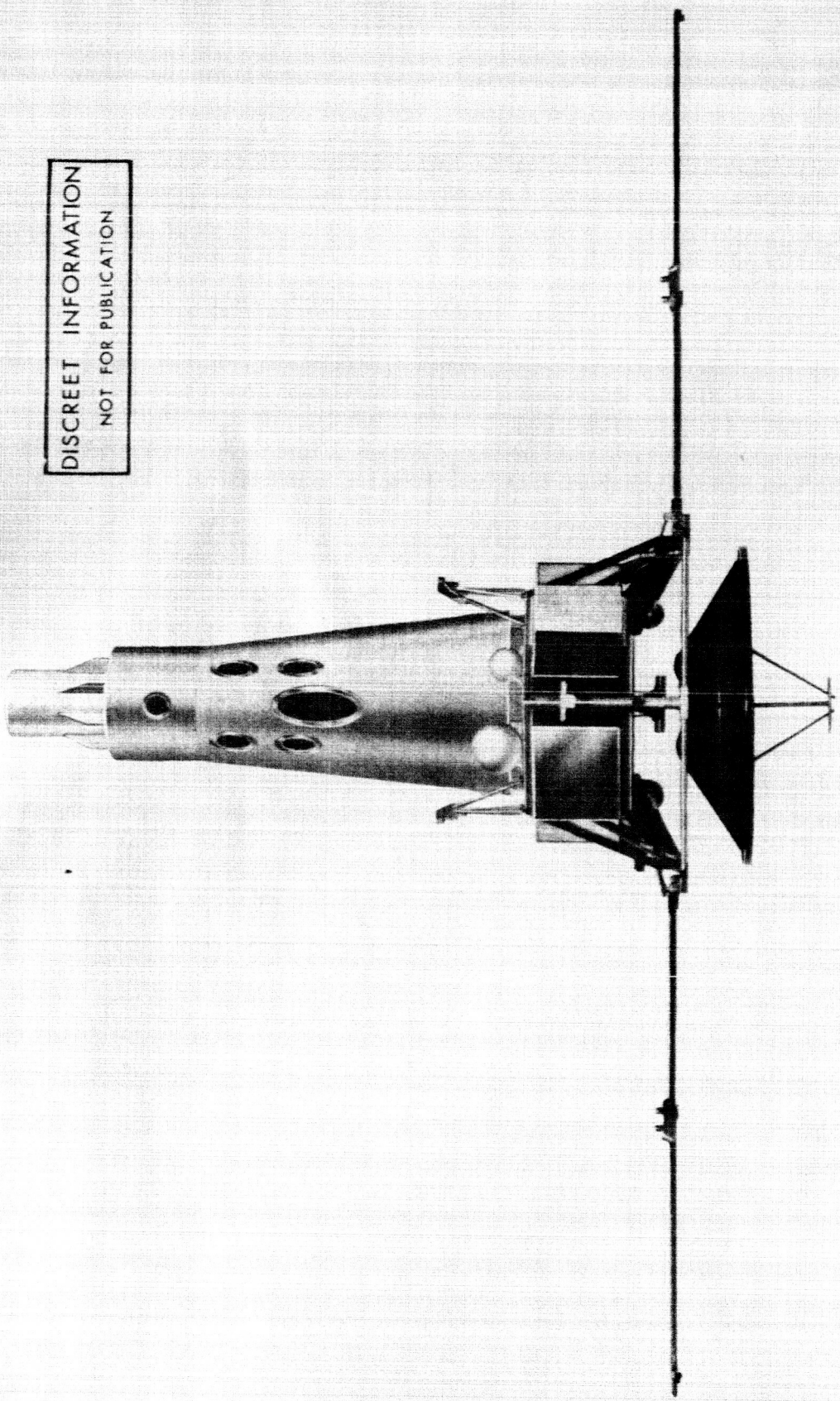

DISCREET INFORMATION
NOT FOR PUBLICATION

Figure 2-2

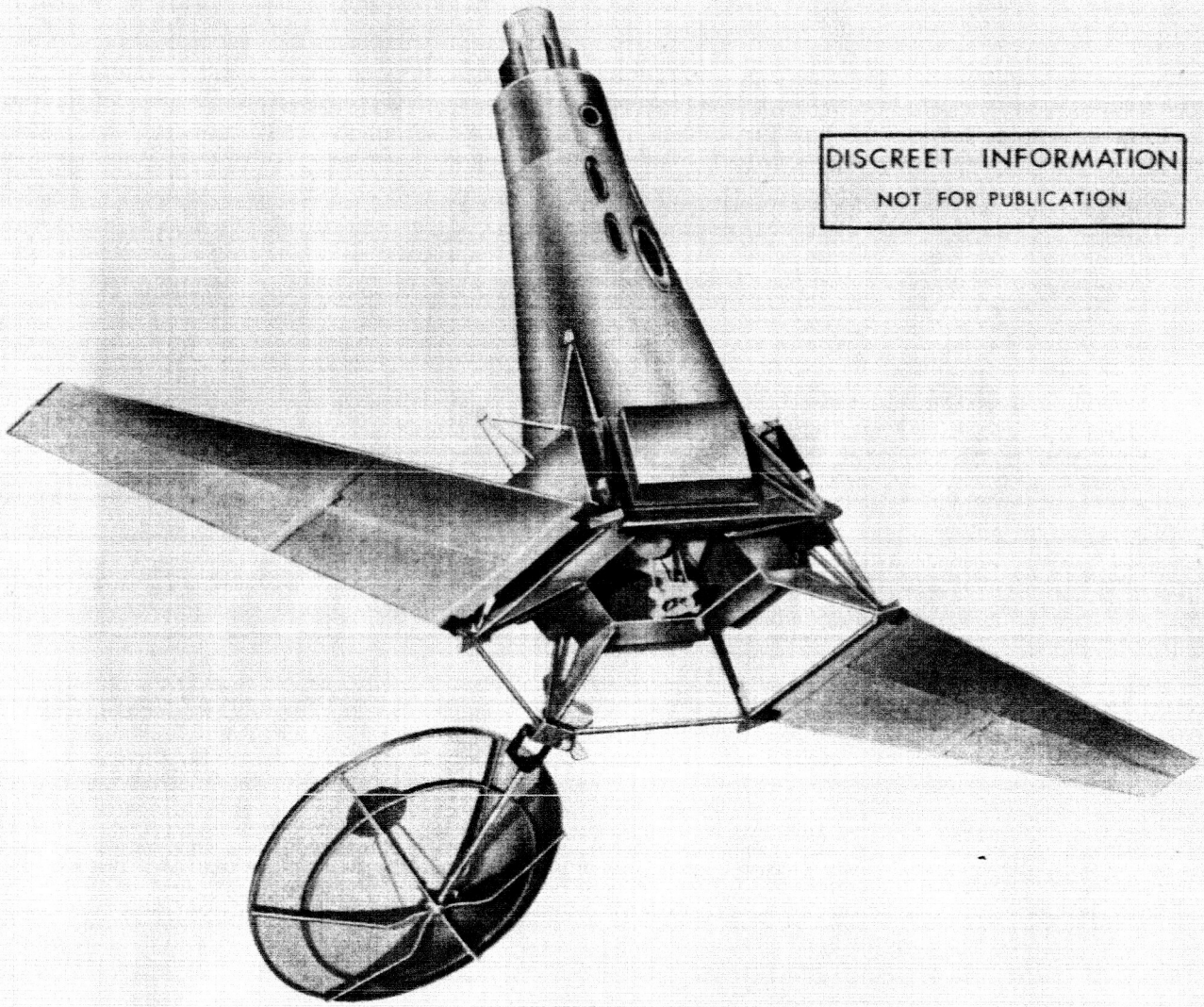

DISCREET INFORMATION
NOT FOR PUBLICATION

Figure 2-3

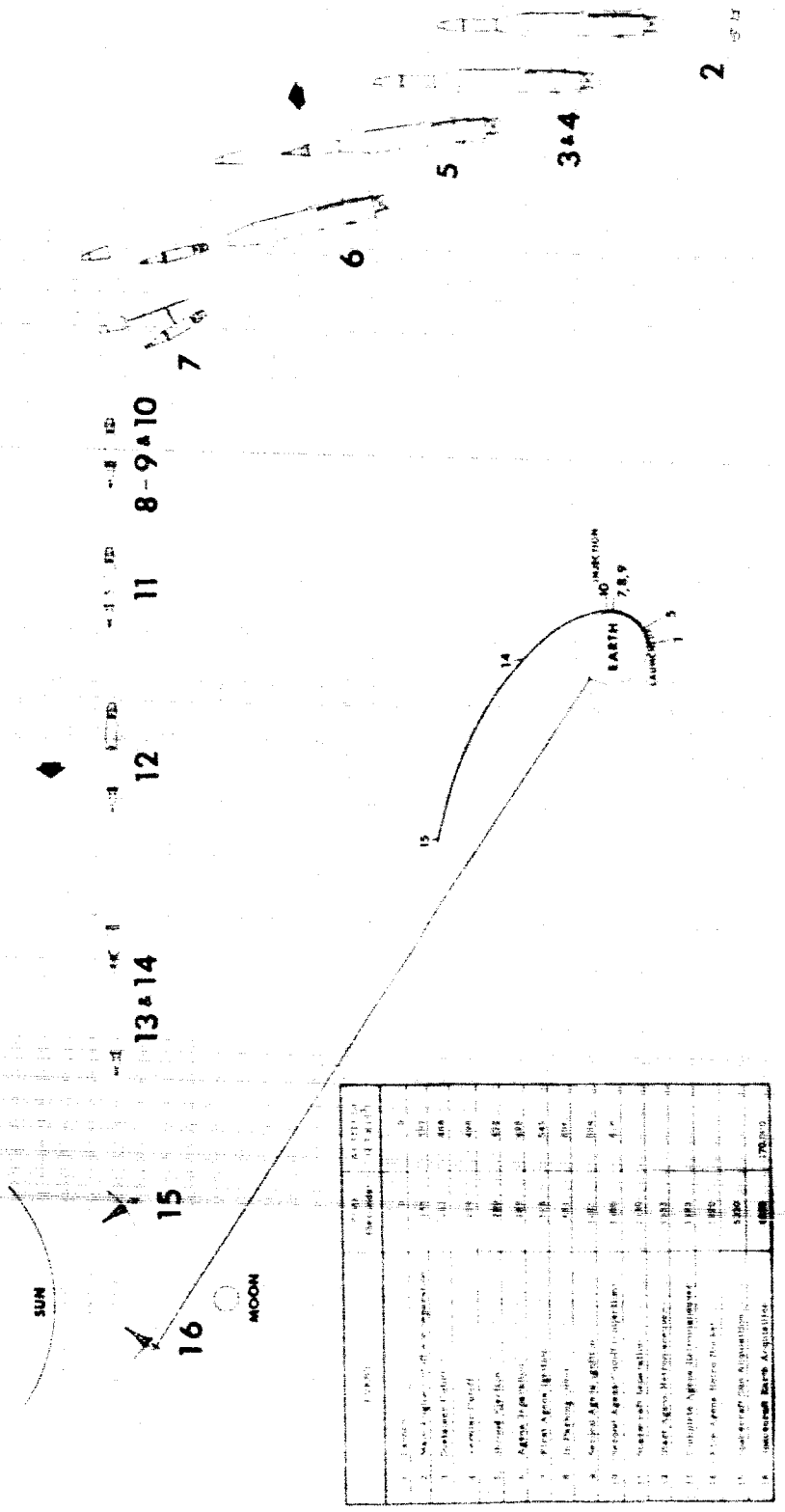
2
3&4
5
6
7
8-9&10
11
12
13&14
15
16
SUN
MOON
EARTH
INJECTION
7,8,9
14
15

Figure 3.1-1

1. AGENA-SPACECRAFT INJECTION AND SEPARATION LAUNCH PLUS 24 MINUTES (NOM)
2. SOLAR PANELS OPEN; HIGH GAIN ANTENNA EXITS TO PRE-SET ANGLE; LAUNCH PLUS 48 MINUTES
3. SOLAR ACQUISITION COMPLETE; LAUNCH PLUS 81 MINUTES
4. EARTH ACQUISITION COMPLETE; LAUNCH PLUS 4 HOURS

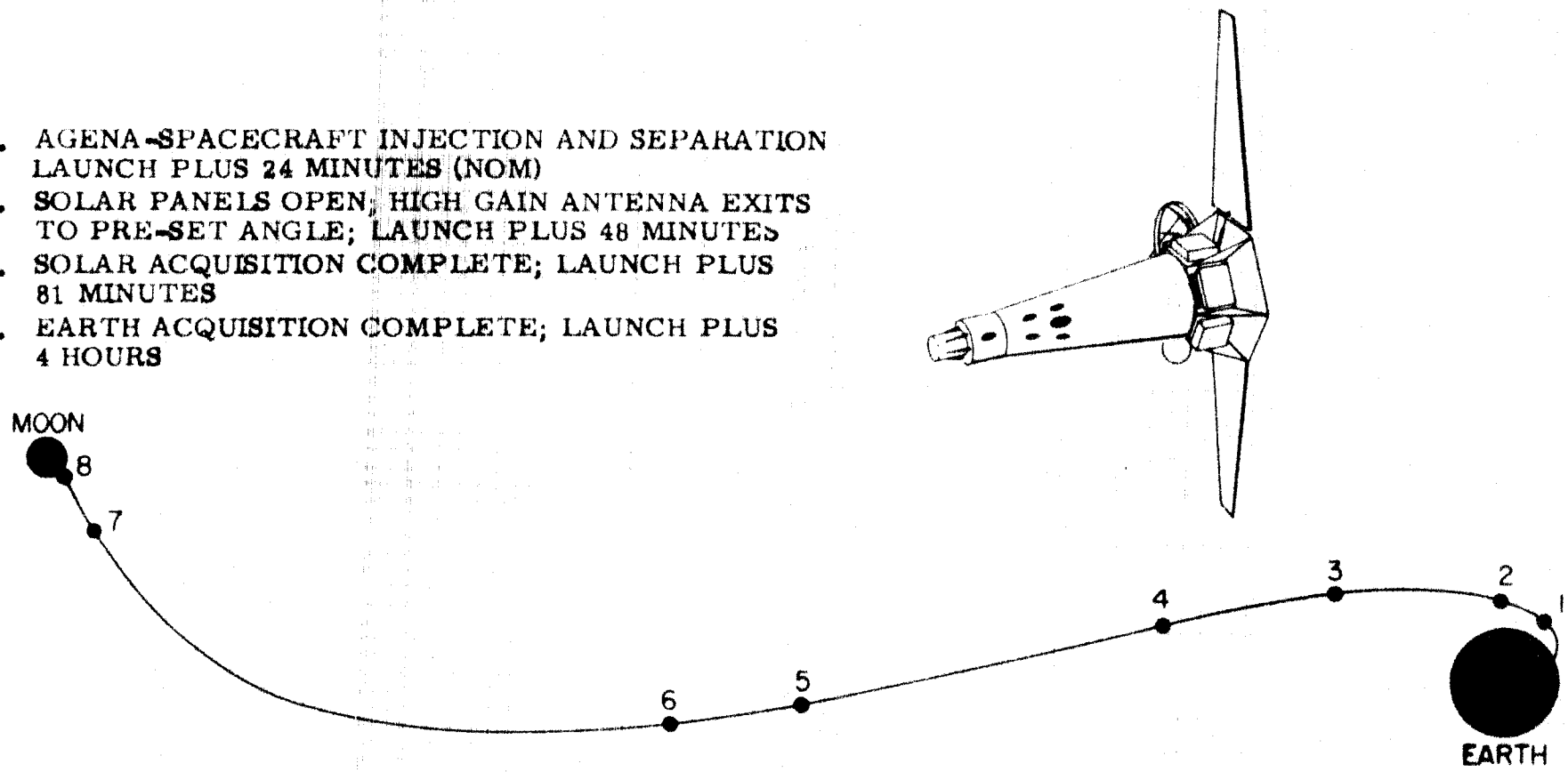

5. MIDCOURSE MANEUVER; LAUNCH PLUS 16 HOURS (NOM)
6. TELEVISION SUBSYSTEM ENGINEERING TELEMETRY ON; LAUNCH PLUS 16 HOURS., 5 MINUTES
7. TERMINAL MANEUVER; LAUNCH PLUS 65 HOURS (NOM)
8. TELEVISION SUBSYSTEM WARM-UP INITIATED; LUNAR IMPACT MINUS 15 MINUTES
9. TELEVISION SUBYSTEM ON AND BROADCASTING PICTURES; LUNAR IMPACT MINUS 10 MINUTES

SUN'S RAYS

Figure 3.1-2 Ranger 6 through 9 Terminal Maneuver

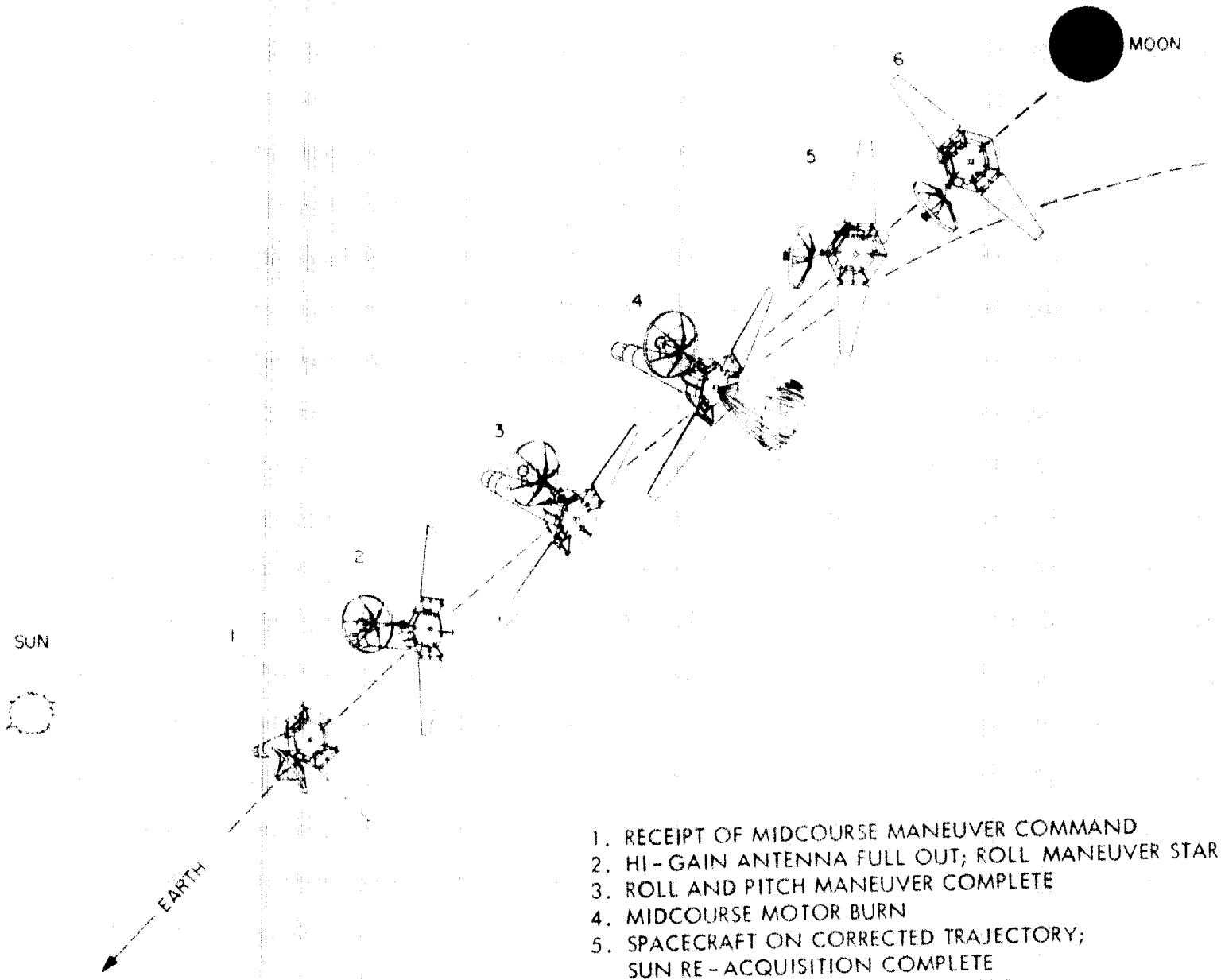

1. RECEIPT OF MIDCOURSE MANEUVER COMMAND
2. HI-GAIN ANTENNA FULL OUT; ROLL MANEUVER STARTS
3. ROLL AND PITCH MANEUVER COMPLETE
4. MIDCOURSE MOTOR BURN
5. SPACECRAFT ON CORRECTED TRAJECTORY; SUN RE-ACQUISITION COMPLETE
6. EARTH RE-ACQUISITION COMPLETE

Figure 3.1-3 Ranger 6 through 9 Terminal Maneuver

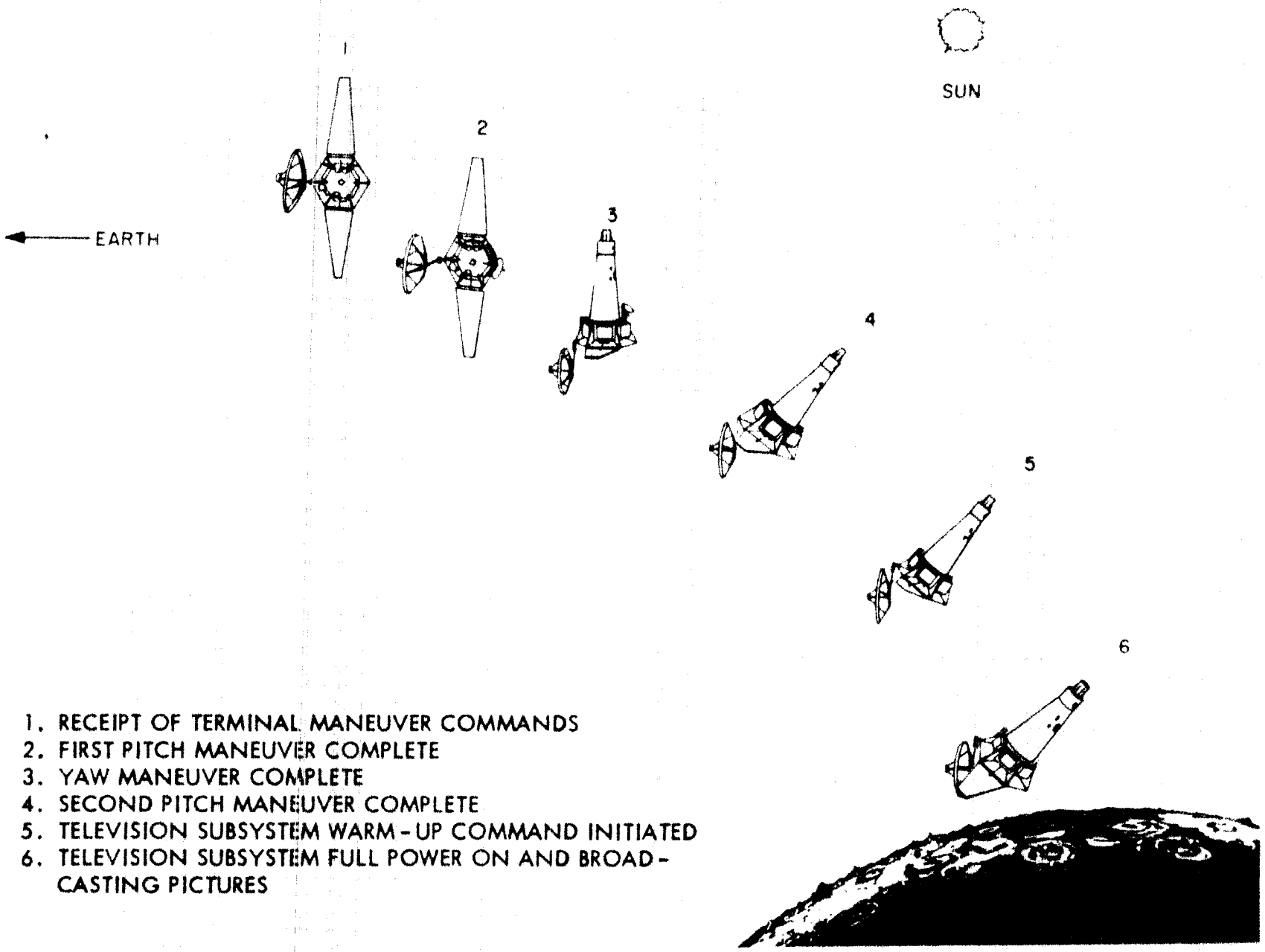

1. RECEIPT OF TERMINAL MANEUVER COMMANDS
2. FIRST PITCH MANEUVER COMPLETE
3. YAW MANEUVER COMPLETE
4. SECOND PITCH MANEUVER COMPLETE
5. TELEVISION SUBSYSTEM WARM-UP COMMAND INITIATED
6. TELEVISION SUBSYSTEM FULL POWER ON AND BROADCASTING PICTURES

Figure 3.1-4. Ranger 6 Through 9 Terminal Maneuver

RL-3-110 A

e. Upon receipt of the start midcourse maneuver command (RTC-4) the central computer and sequencer assumes control of the vehicle. The vehicle assumes the commanded spacial attitude. The antenna for the high powered transmitter is rotated to the limit of its "out" position so as not to interfere with or be damaged by the midcourse motor flame. The motor is ignited and the proper incremental velocity vector correction made. During the motor thrust phase, attitude control is maintained by autopilot controlled jet-vane actuators.

f. Upon termination of the maneuver the acquisition sequence is commanded by the CC&S. After acquisition of sun and earth the cruise mode is again sustained.

g. Approximately 55 minutes before lunar impact, the terminal maneuver is initiated. The three stored commands and the real time command required are computed at JPL and transmitted to Goldstone in the same fashion as the midcourse maneuver commands.

h. Upon a signal from the CC&S, backed up by a real-time command (RTC-7), the TV subsystem warm-up power will be applied. The TV subsystem's sequencer will initiate full power after sufficient warm-up. This command will be backed up by a signal from the bus CC&S. At one minute before lunar impact, the TV subsystem's sequencer will initiate camera switchover, which allows complete transmission redundancy. This command will not be backed up. Thereafter, the entire spacecraft-TV subsystem combination will plunge into the lunar surface, its mission accomplished. The real-time command (RTC-7) may also be used to switch the TV subsystem into an emergency telemetry mode in case any problem occurs that would prevent acceptable receipt of TV telemetry and to also switch the TV subsystem back out of the emergency mode in case any such problem should clear itself.

i. During all modes other than the cruise mode, spacecraft power will be supplied by the launch and back-up battery. TV subsystem power is derived from batteries located in the TV subsystem. All power required for the operation of the TV subsystem, during cruise and terminal phase, will be derived from these batteries. In no instance will spacecraft equipment be powered from the TV subsystem's batteries and in no instance will the TV subsystem require power from the spacecraft's solar panels or battery.

3.1.2 The described events occur within the various subsystems but are generally initiated by the central computer and sequencer (CC&S) on the bus. The details of the flight sequence necessary to the mission are tabulated in table 3.1.2-I.

3.1.3 The terminal maneuver will point the primary camera optical axis in the Terminal Pointing Direction (TPD), computed from tracking data. The TPD is defined as that direction in which the spacecraft must be pointed such that the primary TV camera optical axis is aligned normal to the lunar surface. The primary TV camera optical axis is defined as a line through the camera assembly in the Y-Z plane that has an included angle

of 35° with the roll or Z axis (centerline of the spacecraft) on the + Y (yaw) side. (Refer to figure 3.1.3-1 and the TV Subsystem Functional Specification).

This maneuver will provide the required attitude for the spacecraft to perform the high resolution TV and science radiation experiments. The maneuver will be performed with a pitch, yaw, pitch sequence which will keep the high gain antenna continuously pointed toward earth. Of the 55 minutes allowed for the terminal phase of the mission, the first 30 minutes will be required for a maximum terminal maneuver duration and the last 10 minutes will be required for the taking of high resolution TV pictures. Of the 15 minutes that exist between the end of the maneuver and the initiation of the TV experiment, 10 minutes have been allowed for terminal maneuver initiation 'pad', and 5 minutes have been allowed for TV subsystem warm-up.

3.1.3.1 Sequence of Events for RA 6-9 Terminal Maneuver

a. The terminal maneuver will be initiated by ground command approximately 55 minutes before impact.

b. The CC&S will supply a relay closure to start TV subsystem warm-up, i.e., an internally stored command.

c. TV subsystem warm-up CC&S command will be backed up by a real-time command sent from Goldstone (RTC-7). TV full power on will be initiated by the TV subsystem's sequencer backed up by an internally stored command from the CC&S. Camera switching will be done by the TV subsystem's sequencer without back-up.

d. The TV subsystem will contain an emergency telemetry mode that will be initiated by a ground command from Goldstone (RTC-7) if normal TV telemetry cannot be received for any reason. This same command will be used to transfer back from emergency telemetry to normal TV telemetry if the original fault clears. Note that the mechanization for using the same real-time command for several TV subsystem operations is step-functioned in the TV subsystem itself and requires no special changes in the spacecraft or DSIF design.

e. Receivers at Goldstone will be used to track the two (2) TV subsystem transmitters and the spacecraft transmitter frequencies. Bus telemetry data should be available until lunar impact.

f. The terminal maneuver should be so designed to allow for an inadvertant lunar fly-by mission, such that TV pictures can be taken of the moon in the event of failure of the midcourse maneuver, gross Agena injection errors or both.

g. Two (2) clear commands shall be transmitted prior to the transmission of any real-time command and before the transmission of any group of stored commands. A clear command is termed RTC-0 and has the format 1-00000-000000000000.

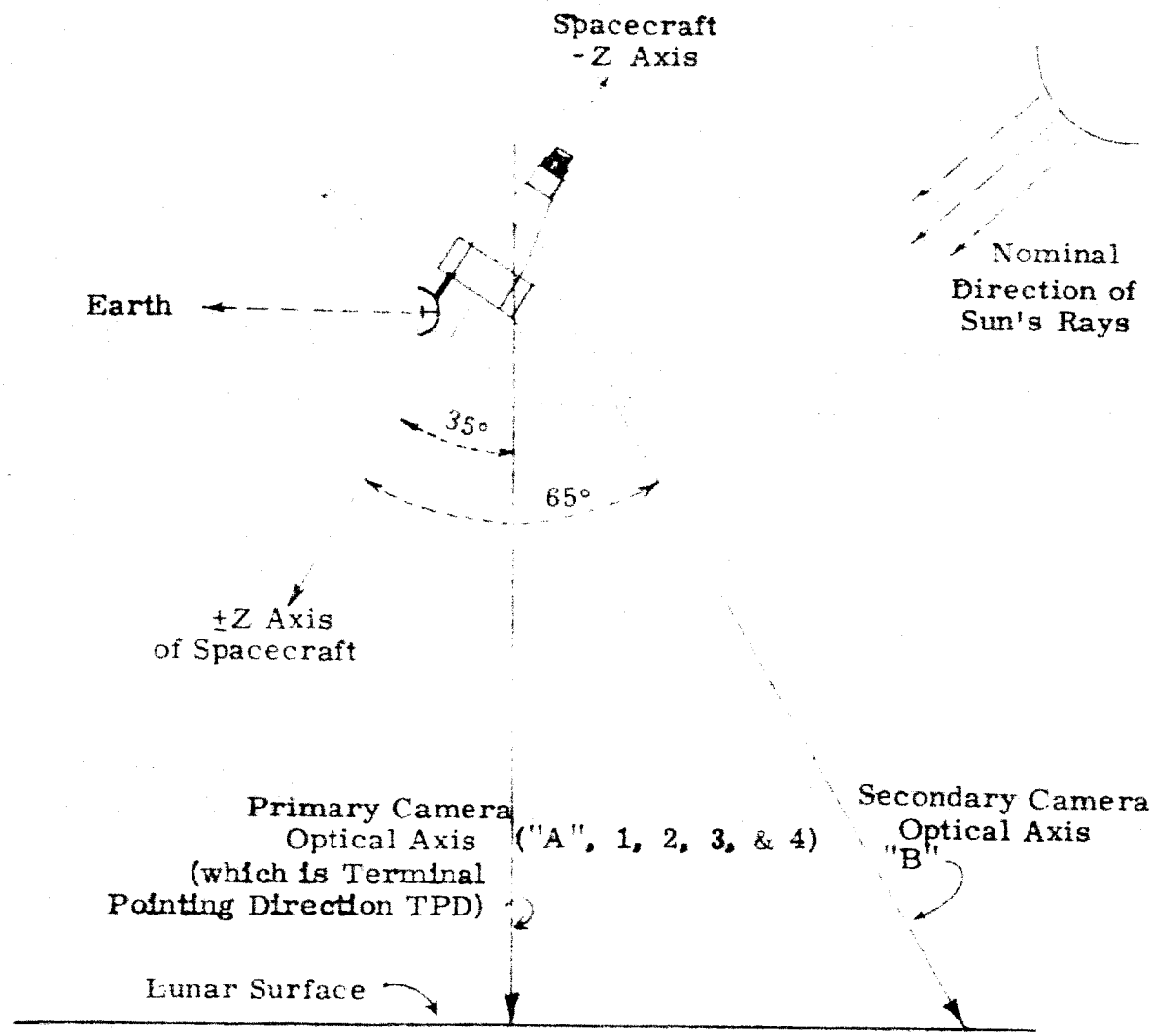

Notes:

1. The plane of the diagram is the Yaw-Roll (Y-Z) plane.
2. The Primary and Secondary Camera optical axes cross the Z-axis at station 427.81.
3. The indicated Terminal Phase Geometry must be reached no later than 10 minutes before Lunar Impact and with a completely stabilized spacecraft.
4. The firing period must be chosen such that incident light from the sun illuminates the lunar surface from an angle of 44.75° ± 22.25° from the spacecraft.
5. Letters and numbers on camera axes refer to the identification of the 6 cameras to be used.

Figure 3.1.3-1. Terminal Phase Geometry

Table 3.1.2-1

A = Time of Launch
B = Time of Midcourse Maneuver Start
C = Time of Terminal Maneuver Start
D = Time of TV Subsystem Power On
I = Time of Injection

RA-6 FLIGHT SEQUENCE
1st Quarter 1963

* Varies with launch azimuth and/or time of launch.

STEP	FUNCTION	1st Day	2nd Day	3rd Day	4th Day	Time	Source
	A. INJECTION AND CRUISE						
1	Admit timing pulses to T/M (Mode I)	A-45	A-45	A-45	A-45	Min.	Command-Blockhouse
2	Transfer to internal power	A-5	A-5	A-5	A-5	Min.	Command-Blockhouse
3	Start CCS Counter	A-2	A-2	A-2	A-2	Min.	Command-Blockhouse
4	Lift-off from AMR	A-0	A-0	A-0	A-0	A	Event-Blockhouse
5	Transmitter power up	A+23	A+23	A+23	A+23	Min.	CCS Command
6	Spacecraft injection *(MAX) Retro Agena stage	A+24	A+22	A+20	A+18	I Min.	Timer-Agena
7	Turn on science experiments (high voltage)	A+24	A+24	A+24	A+24	Min.	CCS Command
8	Unfold solar panels	A+48	A+48	A+48	A+48	Min.	CCS Command
9	Apply attitude control D.C. for sun acquisition a. Extends antenna b. Activates gas jet system c. Activates sun sensor system d. Commence solar acquisition	A+51	A+51	A+51	A+51	Min.	CCS Command
10	Spacecraft leaves earth shadow *(MAX)	I+0	I+6	I+15	I+17	Min.	Event
11	Sun acquisition complete	A+81	A+81	A+81	A+81	Min.	Event-Attitude Control
12	Apply attitude control 1φ, 400 cps for earth acquisition a. Activate earth sensor system b. Starts roll search command	A+3.5	A+3.5	A+3.5	A+3.5	Hr.	CCS Command
13	Earth sensor attains light signal a. Stops roll search b. Starts hinge servo	≥A+3.5	≥A+3.5	≥A+3.5	≥A+3.5	Hr.	Event-Attitude Control
14	Earth acquisition complete	A+4	A+4	A+4	A+4	Hrs.	Event-Attitude Control
15	Switch 3-watt system from omni to directional antenna	A+4	A+4	A+4	A+4	Hrs.	Ground Command RTC-3
16	Roll and hinge override (as necessary). Resume search. Switch back to omniantenna during search.	>A+4	>A+4	>A+4	>A+4	Hrs.	Ground Command RTC-1, 2, 3

Table 3.1.2-1 (Cont'd)

STEP	FUNCTION	1st Day	2nd Day	3rd Day	4th Day	Time	Source
17	Spacecraft rises on Goldstone horizon	A+12.5	A+12.3	A+12.0	A+11.8	Hrs.	Event-Tracking
18	3-watt system switched to directional antenna (back-up); turn on TV subsystem engineering telemetry	A+16.1	A+16.1	A+16.1	A+16.1	Hrs.	CCS Command
	B. MIDCOURSE MANEUVER						
19	Complete midcourse tracking and correction computation. Transmit midcourse maneuver roll and pitch duration and impulse magnitude. If tracking or error computation is inadequate at this time, add 24 hours to B.	A+15.5 (Nom.)	A+15.5 (Nom.)	A+15.5 (Nom.)	A+15.5 (Nom.)	Hrs.	Ground Command SC-1, 2, 3
20	Initiate midcourse maneuver sequence, T/M Mode II	A+16	A+16	A+16	A+16	Hrs. (B)	Ground Command RTC-4
21	Switch 3-watt transmitter to omniantenna	B+0	B+0	B+0	B+0	Min.	Ground Command RTC-3
22	Turn on midcourse autopilot, jet vane actuators, and accelerometer. Turn off earth sensor system (1Ø,400 cps). Connect roll channel capacitor, initiate command polarity, command roll, angle turn (provide antenna exit).	B+5	B+5	B+5	B+5	Sec.	CCS Command
23	Telemetry mode change backup (if needed)	>B+0	>B+0	>B+0	>B+0	Min.	Ground Command RTC-5
24	Stop roll angle turn, switch to pitch channel	B+5 to B+455	B+5 B+455	B+5 B+455	B+5 B+455	Sec.	CCS Command
25	Switch out sun sensors signals, connect pitch and yaw channel capacitors, initiate command polarity, command pitch angle turn.	B+9.5	B+9.5	B+9.5	B+9.5	Min.	CCS Command
26	Stop pitch angle turn	B+9.5 to B+24.5	B+9.5 to B+24.5	B+9.5 to B+24.5	B+9.5 to B+24.5	Min.	CCS Command
27	Command midcourse motor ignition	B+26.5	B+26.5	B+26.5	B+26.5	Min.	CCS Command
28	Command midcourse motor shut-off	B+26.5 to B+27.6	B+26.5 to B+27.6	B+26.5 to B+27.6	B+26.5 to B+27.6	Min.	CCS Command
29	Turn off midcourse autopilot, motor actuators, and accelerometer; provide antenna reposition, commence solar acquisition. Initiate T/M Mode III.	B+28	B+28	B+28	B+28	Min.	CCS Command
30	Telemetry mode change backup (if needed)	>B+28	>B+28	>B+28	>B+26	Min.	Ground Command RTC-5
31	Sun re-acquisition complete	B+58	B+58	B+58	B+58	Min.	Event-Attitude Control
32	Apply attitude control 1Ø, 400 cps a. Activate earth sensor system b. Starts roll search command	B+58	B+58	B+58	B+58	Min.	CCS Command

Table 3.1.2-I (Cont'd)

STEP	FUNCTION	1st Day	2nd Day	3rd Day	4th Day	Time	Source
33	Earth sensor attains light signal a. Stops roll search b. Starts hinge servo	≥B+58	≥B+58	≥B+58	≥B+58	Min.	Event-Attitude Control
34	Roll and hinge override (as necessary) Resume search	≥B+58	≥B+58	≥B+58	≥B+58	Min.	Ground Command RTC-1, 2
35	Earth re-acquisition complete	B+88	B+88	B+88	B+88	Min.	Event-Attitude Control
36	Switch 3-watt transmitter to directional antenna (antenna choice cyclic selection as necessary)	B+88	B+88	B+88	B+88	Min.	Ground Command RTC-3
37	Spacecraft sets on Goldstone horizon	A+23.7	A+23.1	A+22.5	A+21.8	Hrs.	Event-Tracking
38	Spacecraft rises on Goldstone optical horizon	A+36.8	A+36.1	A+35.4	A+35.0	Hrs.	Event-Tracking
C.	TERMINAL MANEUVER						
39	Complete terminal tracking and computation, transmit turn duration (pitch-yaw-pitch) information	64.5 (Nom.)	64.1 (Nom.)	63.5 (Nom.)	62.6 (Nom.)	Hrs.	Ground Command SC-4, 5, 6
40	Initiate terminal maneuver sequence**	A+65.3	A+64.8	A+64.2	A+63.3	Hrs. (C)	Ground Command RTC-6
41	Select terminal mode, switch out sun sensor signals, connect pitch and yaw channel capacitors, initiate command polarity, command pitch angle turn.	C+5	C+5	C+5	C+5	Sec.	CCS Command
42	Stop pitch angle turn, switch to yaw channel	C+5 to C+455	C+5 to C+455	C+5 to C+455	C+5 to C+455	Sec.	CCS Command
43	Initiate command polarity, command yaw angle turn	C+9.5	C+9.5	C+9.5	C+9.5	Min.	CCS Command
44	Stop yaw angle turn, switch to pitch channel	C+9.5 to C+19.5	C+9.5 to C+19.5	C+9.5 to C+19.5	C+9.5 to C+19.5	Min.	CCS Command
45	Initiate command polarity, command pitch angle turn	C+21.5	C+21.5	C+21.5	C+21.5	Min	CCS Command
46	Stop pitch angle turn, initiate T/M Mode IV.	C+21.5 to	C+21.5 to	C+21.5 to	C+21.5 to	Min.	CCS Command
47	Telemetry mode change backup (if needed)	C+25 to C+35	C+25 to C+35	C+25 to C+35	C+25 to C+35	Min.	Ground Command RTC-5
48	Turn on TV subsystem warm-up	Bus Impact-15	Bus Impact-15	Bus Impact-15	Bus Impact-15	Min.	CCS Command

Table 3.1.2-1 (Cont'd)

STEP							
49 *	Turn on TV subsystem warm-up backup	Bus Impact-15	Bus Impact-15	Bus Impact-15	Bus Impact-15	Min.	Ground Command (backup) RTC-7
50	TV full power on	Bus Impact-10 (D)	Bus Impact-10 (D)	Bus Impact-10 (D)	Bus Impact-10 (D)	Min.	TV Subsystem Sequencer
51	TV full power on backup	D+0	D+0	D+0	D+0	Min.	CCS Command
52	Cameras switch to both transmitters	D+9	D+9	D+9	D+9	Min.	TV Subsystem Sequencer
53	Lunar impact	D+10	D+10	D+10	D+10	Min.	Event
54	Switch out gyros; switch in primary sun sensors; T/M Mode 1	C+1.7	C+1.7	C+1.7	C+1.7	Hrs.	CCS Command; (Fly-by event)

**Bus impact minus 55 minutes

3.1.4 At approximately 1400 km above the lunar surface, the TV full power on command will be given. The TV subsystem is completely self-sustaining from this point until impact.

3.2 Midcourse and Terminal Guidance Instrumentation

a. There are certain absolutely necessary data from RA6-9 which must be obtained to evaluate spacecraft performance during midcourse and terminal maneuvers. Specific requirements cannot be set until final design is settled. Specific details will be covered in the appropriate functional specifications.

b. As noted in the flight sequence, the midcourse and terminal maneuver commands are based upon tracking and trajectory computations. The computations are made at JPL and sent to Goldstone, where, after suitable checking, the maneuver commands are transmitted as a group of three words to the spacecraft which are stored in the CC&S. The time between words is to be as short as practicable. The stored commands will be issued approximately 1/2 hour before the execute command. The real-time execute command must start within ±5 minutes of the required time.

c. No retransmission of the maneuver commands for the purpose of checking the reception of the command is required. However, telemetry required to evaluate the command system will be incorporated.

d. A second mode of data handling is required to adequately record the action of spacecraft guidance and control during midcourse and terminal maneuvers. Information of this nature includes gyro signals, midcourse jet vane angles, antenna hinge angle, critical motor temperatures and tank pressures and times that events occur, such as motor shutoff time. Additional information of accelerometer integration as a function of time is highly desirable, but not absolutely mandatory. Antenna hinge angle and gyro signals are needed throughout the flight at normal data rates.

3.2.1 The measurements are essentially three categories: (excluding the scientific measurements).

a. Measurements which provide data required in near real time to perform the operation.

b. Measurements which will help evaluate the design by providing a quantitative measure of the accuracy of the systems performance in the flight environment.

c. Failure isolation (diagnostic) measurements.

3.2.2 Priorities for measurements on RA6-9 (excluding scientific measurements) are as follows:

a. Measurements required for the operation (e.g., central computer and sequencer clock speed, command receiver phase error).

b. Measurements in category (2) above which apply to the engineering experiments (e.g., antenna hinge angle, rate gyros, midcourse jet vane angles, tank pressures).

c. Measurements in category (3) above which apply to the engineering experiments (e.g., received command, rate gyros, accelerometers, integrator, antenna hinge angle, jet vane angles, tank pressures).

d. Measurements which refine objectives attained on RA3, 4, and 5.

3.2.3 The specific objectives of the measurements requested are:

a. Maneuver.

1) Ability of the A/C system to properly orient the spacecraft for the maneuvers and to control its attitude during the midcourse maneuver by means of the jet vane actuators.

2) Ability of the A/C system to reacquire after the midcourse maneuver.

3) Accuracy of applying the maneuvers (mainly determined from the change in trajectory).

4) Cause of errors in the maneuvers, i.e., isolate between A/C, motor and rf command.

5) Ability of maintaining tank pressure in the space environment.

b. Performance of temperature control system.

c. Continued evaluation of the performance of the solar panels and the power system.

d. Continued evaluation of the range and reliability of the communication system.

e. Continued investigation of the environment.

4.0 Performance Characteristics

4.1 The lunar impact trajectories for RA6, 7, 8, and 9 should satisfy certain constraints. The constraints and their source of origin are:

a. Attitude Control. Earth-Probe-Sun angle of 90° ±50° after injection.

b. Scientific Mission. Lighting angle of about 22.5° to 67°. (The lighting angle indicates the amount of shadows seen on the lunar surface by the spacecraft observer. It is defined as the angle between the moon-sun line and the moon-probe line, or the sun-moon-probe angle). Also the velocity vector must be perpendicular to the lunar surface during the terminal phase.

c. Tracking.

1) Deep Space. The spacecraft will cross near the Goldstone Meridian at lunar encounter.

2) Injection Tracking and Telemetry. The launch azimuth shall be such that injection trajectory is visible from AMR tracking and telemetry sites, most of the time.

3) Omniantenna. The pattern of the RA6-9 design omniantenna is such that the earth-probe-sun angle must be kept to 90° ±50° after sun acquisition and before transfer to the high-gain antenna and also at the time of transfer to omni prior to the midcourse maneuver.

d. Power and Thermal Control. The spacecraft will not be in the earth's shadow after injection any longer than is necessary to meet the other constraints listed.

4.2 Guidance System

4.2.1 The guidance system will have three distinct modes of operation; they are:

a. Acquisition of sun and earth

b. Cruise

c. Maneuver

Each one of these modes will occur twice during flight.

4.2.2 The initial acquisition of sun and earth occurs soon after injection. The sun acquisition consists of establishing the roll axis of the spacecraft along the sun-probe line, such that the -Z axis points toward the sun. The plane of the solar panels is perpendicular to the roll axis, consequently the panels face the sun. The initial acquisition of the sun should occur within 64 minutes after launch. The roll axis should be established along the sun-probe line within ±1°. Earth acquisition consists of directing the parabolic antenna along the earth-probe line. This should be accomplished within 4 hours after launch. The pointing of the antenna should be within ±2° of the earth-probe line.

4.2.3 The cruise mode is then established and the above pointing accuracies should be maintained throughout this mode.

4.2.4 The first maneuver mode, the midcourse maneuver, will be performed if tracking of the spacecraft indicates that the trajectory it is following will not comply with the constraints outlined in paragraph 4.1. In the likely event that trajectory correction is required, the necessary velocity magnitude and direction will be computed and commanded from the ground.

4.2.5 The tracking, command and execution of command will be sufficiently accurate to establish the location of the lunar impact point to within 40 km (RMS). The time of flight variation shall be minimized, subject to the constraint that the included angle between spacecraft roll axis and the earth-probe line shall be greater than 40°. This constraint arises from the directional properties of the low gain antenna and prevents loss of engineering telemetry during the maneuver.

4.2.6 The midcourse maneuver will occur at least five hours after Goldstone acquisition of the spacecraft to allow sufficient time for tracking, error computation, ground command, and execution of maneuver; and will be completed at least one hour prior to loss of Goldstone acquisition to allow time for post maneuver tracking.

4.2.7 Upon completion of the firing of the midcourse rocket, the spacecraft will then automatically reacquire the sun and earth, thus regaining the cruise mode.

4.2.8 The required commands for the terminal maneuver will be computed at the JPL Central Computing Facility and transmitted from the Goldstone tracking site.

4.2.9 The terminal maneuver will begin 55 minutes before lunar impact as determined from tracking data, so that the spacecraft has had sufficient time to complete the terminal maneuver, establish a stabilized attitude and warm-up the TV subsystem prior to the initiation of high power TV telemetry. Actual operational time is 45 minutes, however, an additional 10 minutes has been allowed to re-lock and re-initiate the maneuver if the first attempt to do so was unsuccessful. The roll axis will be aligned along the Terminal Pointing Direction (TPD), (defined in paragraph 3.1.3). The RMS error between the primary TV camera optical axis and the TPD must be less than 1°. Contributing errors are as follows:

a. Tracking errors in determination of the TPD.

b. Pointing error of the attitude control subsystem in aligning the primary TV camera optical axis with the TPD, as determined from tracking data.

c. Computational errors.

4.3 Antennas

4.3.1 The antenna system will approximate an omnicoverage for reception and transmission.

4.3.2 A high-gain antenna will be used for attitude dependent communications. A servo system operating at a hinged point on the basic structure in conjunction with the roll attitude control will provide the beam pointing function. This antenna must incorporate circular polarization capability for RA6-9 and additionally, S-band capability for RA8 and RA9. This shall not cause any extensive modification of the Agena or its adapter.

4.4 Communications

4.4.1 Transponder (L-band)

a. The transponder shall consist of an extremely narrow band, double superheterodyne, automatic, phase tracking receiver operating at approximately 890 mc, and an integrally related transmitter operating at approximately 960 mc. It shall be transistorized with the exception of the transmitter cavity power amplifier stage. The unit shall correlate maximum long term reliability, minimum power consumption, and minimum weight with the required electrical performance. The transponder shall be used for space vehicle communications. Its functions include telemetering engineering and scientific information, doppler range and velocity measurements, and earth to spacecraft command reception.

b. Doppler data reception must be available from lift-off.

c. Power will be supplied from the spacecraft basic power system.

4.5 Scientific Experiments

All experiments shall be operable in time to make measurements while the spacecraft is still in the Van Allen Belt to assure (1) calibration in a known radiation field and (2) to allow measurement of the Van Allen radiation field with the dosimeter.

4.5.1 Dosimeter (RA8 and 9 only)

The dosimeter measurements shall be made with three (3) tissue equivalent ion chambers, two (2) of which will be shielded and one (1) of which will be unshielded. The purpose of this experiment is to determine the radiation effects on human tissue in cis-lunar space.

4.5.2 Standard Ion Chamber

A standard ion chamber will be used to determine the radiation ionization effects in cis-lunar space and to aid in calibration of the tissue equivalent ion chambers.

4.5.3 Radiation Counters (RA7, 8, and 9 only)

Geiger counters will be used to determine the actual radiation evident in cis-lunar space.

4.5.4 The science experiments shall provide their own data conditioning electronics which shall be compatible with the spacecraft's data encoder. Simple signal conditioning will be used for the Neher ion chamber on Ranger 6. A data conditioning subsystem will be employed on Rangers 7, 8, and 9.

4.5.5 The science subsystem will supply all transformer-rectifier power conversion equipment for Rangers 6, 7, 8, and 9. These will be driven from a 2400 cycle, single phase science inverter.

4.6 TV Subsystem

a. A TV subsystem will be mounted on the spacecraft for the specific purpose of providing high resolution TV pictures of the lunar surface. The enclosing tower shall provide adequate thermal control and other necessary protection in space environment.

b. The TV subsystem shall be self-sustaining after initiation at near lunar distance. Two (2) redundant transmitters shall be used to assure reliability and to gain all pertinent data consistent with this type mission.

c. The TV subsystem may telemeter engineering data during cruise mode and shall be capable of transferring to an emergency telemetry mode during the terminal maneuver if the situation warrants. It shall also be capable of transferring back from the emergency mode if the emergency situation clears itself. All of the referenced transferrals shall be accomplished by ground command.

d. The TV subsystem may employ a 'color' wheel to enable a reconstruction of a color picture of the lunar surface.

e. A secondary camera may be used to 'scan' the lunar surface during the spacecraft's trajectorial descent.

f. The spacecraft's omni-antenna shall be mounted firmly on the TV tower's apex.

g. The TV subsystem's engineering telemetry shall be activated 16 hours, 5 minutes after launch; warm-up power shall be applied 15 minutes before impact and full power to the entire subsystem shall be applied 10 minutes before lunar impact. The subsystem shall be compatible with an inadvertant lunar 'fly-by' mission, the time not to exceed that normally expected in terminal maneuver.

h. R. F. radiation from the TV subsystem shall in no way interfere with the proper operation of the spacecraft transponder's 960 MC transmission or 890 MC reception, or the S-band ranging experiment transponder.

4.7 S-band Ranging Experiment (Rangers 8 and 9)

A 2300 megacycle turn around transponder, with no coding, will be added on two (2) flights for the purpose of conducting an r. f. ranging experiment The S-band transmitter will radiate through the spacecraft's high gain antenna. The S-band transponder shall in no way interfere with the proper operation of the spacecraft's L-band communications transponder or either of the TV subsystem's transmitters. Certain diagnostic measurements will be be taken from within the S-band subsystem for telemetering through the spacecraft's L-band communications transmitter.

5.0 Block Diagram

5.1 A signal block diagram is shown in figure 5-1.

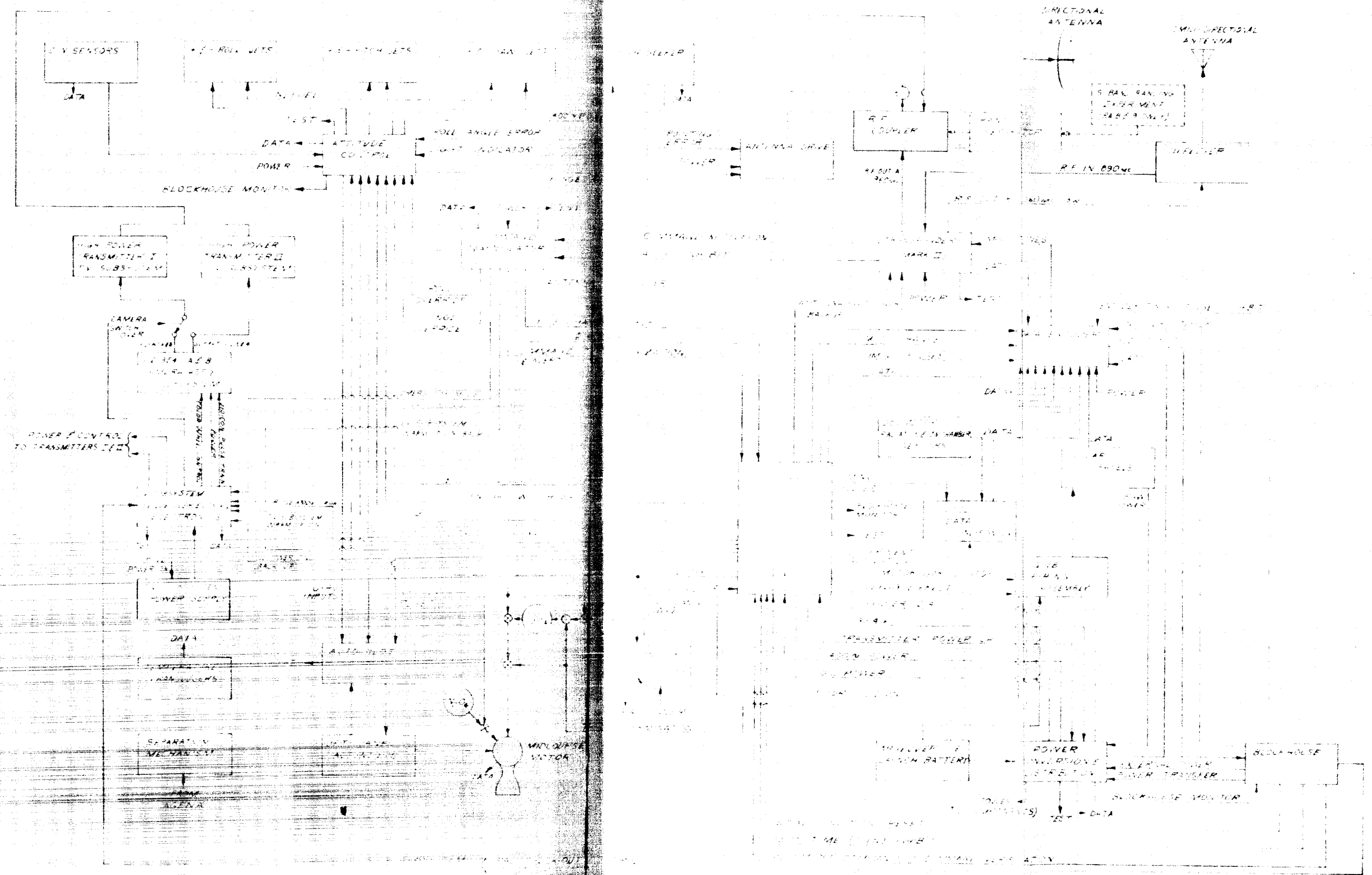

Figure 5-1 Signal Block Diagram

RL-3-120

DESIGN CHARACTERISTICS AND RESTRAINTS

DESIGN RESTRAINTS

APPROVED BY:

M. R. Mesnard

JET PROPULSION LABORATORY

Spec. No. RL-3-120
20 November 1961

P53 (RA-6), P54 (RA-7), P55 (RA-8) AND P56 (RA-9) SPACECRAFT

DESIGN CHARACTERISTICS AND RESTRAINTS

DESIGN RESTRAINTS

Note: It is a design restraint on Rangers 6 through 9 that no changes from the basic RA345 bus design will be allowed that are not required to meet the T.V. Subsystem interface, the new science interface, the ranging experiment interface or to meet the basic mission requirements. Every effort is to be extended to meet the new interfaces with minimum design change.

1.0 ENVIRONMENT

1.1 The spacecraft must withstand the acceleration and vibration levels associated with the launching of the Atlas and Agena and thereafter, remain in a zero acceleration state until midcourse maneuvers and lunar approach maneuvers impose additional vibration and acceleration stress upon it. The spacecraft and its components must be able to operate in a hard vacuum and in the best thermal environment that can be provided by a passive thermal control system in outer space, during sun orientation and in maneuver position.

1.2 The components of the spacecraft must withstand the radiation environment encountered in space.

1.3 The spacecraft must be able to withstand the strains imposed by normal transportation and handling methods.

1.4 Spacecraft Propulsion System (Midcourse Motor)

a. This unit must undergo ignition and operate in a gravitationless environment.

b. The unit must ignite and operate in a hard vacuum environment.

c. The midcourse motor should be designed so that when filled and pressurized it will be safe according to current safety standards.

d. The installation of the midcourse motor shall be such that its thrust axis can be located to within 1 inch of the spacecraft's roll axis (Z axis) in all directions in the pitch-yaw (X-Y) plane.

2.0 VEHICLES

2.1 The Ranger 6, 7, 8 & 9 spacecraft are being designed for the specific capability of a lunar impact mission aboard an Atlas/Agena vehicle. Total weight or weight of any listed component shall be no more than that stated in the Design Parameter and Reference Designation Specification.

2.2 Separation

The method of separating the spacecraft from the Agena adapter shall not impart an angular rate greater than 3 degrees per second about each of the 3 principal spacecraft axes. The noncritical magnitude of the incremental velocity imparted to the spacecraft upon separation must be predictable to within ±2 feet per second. Electrical separation shall be effected upon a signal from the Agena stage. Since electrical separation is performed prior to mechanical separation, the reactive force component vectors are confined within the system.

Mechanical separation of the spacecraft from the Agena adapter shall take place in the plane between the feet of the spaceframe and the Agena adapter.

Shroud separation shall occur after the Atlas sustainer stage has been dropped off and the Agena has stabilized the flight vehicle of any residual oscillatory rates. The shroud shall be ejected; a subsequent pitch down program of the Agena vehicle prevents a collision with the free shroud.

2.3 Center of Gravity (Composite; Spacecraft and Payload)

The acceptable tolerance on the location of the composite center of gravity at initiation of midcourse maneuver is one inch from the roll axis in any direction in the pitch-yaw plane that exists through the Z-axis C.G. The Z-axis C.G. must meet the constraints of the Attitude Control and Autopilot Subsystems.

2.4 Tanks for the propellant shall be sized to accommodate a minimum possible velocity increment of 120 ft/sec in the direction of thrust.

2.5 Motor, tankage cabling and jet vane actuators should be constructed as an integral unit and be removable.

2.6 Internal timing and event sequencing is controlled by the Central Computer and Sequencer. It is desirable that all internally generated and stored events be routed through the CC&S. All real time ground commands will be initiated by the command decoder. All maneuver stored commands transmitted from the ground shall be routed to and stored by the CC&S until used.

2.7 In order to ease bus and T.V. Subsystem passenger thermal design restraints and to assure minimum picture blurring and good picture nesting, it is desirable that the initiation of the terminal maneuver be as late as possible. Poor nesting and picture blurring is due to misalignment of the T.V. camera axis with the velocity vector.

2.8 The initiation of the T.V. passenger is provided by a contact closure in the CC&S. A relay contact pair is provided for this purpose. The television sequence will be initiated by a stored command from the CC&S with a redundant real-time command available for reliability of sequence initiation.

2.9 After initiation of the Television Subsystem by spacecraft switching, and a redundant 'power on' command from the CC&S, the Television experiment is to be self-controlled, furnishing its own power and rf system until lunar impact. The TV rf system will radiate through the spacecraft's antenna system.

2.10 Power System

The basic power system shall be solar orientation dependent, backed up by the main battery for those phases of flight during which solar attitude cannot be maintained.

Configuration of panels should not be modified from those on RA345. Increased power demands (if any) should be met through improved performance.

a. The power distribution network shall be designed for optimum performance in accordance with the following relative priority list:

1) Reliability

2) Efficiency

3) Conducted and radiated interference in relation to the interference susceptibility of the most critical subsystem in the craft

4) Power load regulation cross-coupling

5) Balancing of heat dissipation

6) Weight

7) Size

8) Economy

b. Spacecraft wiring outside the hexagonal plenum will be as follows:

1) No feed-through terminal boards (headers) will be mounted in top or bottom of the hexagonal plenum (doughnut). RF coax connections will be considered an exception.

2) For small, highly reliable items attached to the outer hex structure or to the T.V. support structure, solder terminals at the item are preferred. A connector may be used instead.

3) For large, complex, or frequently removed items, a connector (or connectors, if necessary) is preferred. Solder terminals may be used, however.

4) Use of pigtails is generally incompatible.

c. The numerical designations for spacecraft components are listed in the Design Parameters and Reference Designation Specification.

Grounding - Complete grounding methods are iterated in the Cabling Functional Specification. It is essential to adhere to these rules in order to eliminate ground loops and minimize system interference. In cases where these points are not compatible or consistent with existing designs it should be brought to the attention of the Spacecraft Project Engineer for review.

2.11 Central Computer and Sequencer

The central computer and sequencer (CC&S) constitutes the basic timer for the spacecraft, the T.V. experiment initiation and the scientific experiments. The CC&S further coordinates the activities of the various spacecraft systems and causes the necessary and correct operations to be initiated during the flight of the craft. It also accepts, stores and acts upon maneuver commands. The CC&S will be designed such as to insure the receipt of correct maneuver stored commands and for maximum safety against issuing commands inadvertantly, consistent with the highest possible reliability of operation.

2.12 Data Encoder

The data encoder will accept and encode signals corresponding to voltage, temperatures, pressures, scientific data, T.V. Subsystem engineering data and other telemetered variables for radio transmission.

2.13 Command Decoder

The command decoder shall recognize the presence of coded binary and 1 cps sync signals at the output of the transponder receiver and provide actuation for all but the maneuver commands. The maneuver commands

will be sent to the Central Computer and Sequencer for storage and action. The command decoder will be designed such as to insure correct commands.

2.14 Attitude Control

The attitude control subsystem shall contain the necessary optical and gyro sensors, along with associated switching and logic circuitry, and cold gas jet impulse system to acquire and maintain the sun to expose the solar panels and to acquire and maintain the earth for high gain antenna aiming. It shall be capable of accepting maneuver commands and stabilizing the spacecraft in a prescribed manner. It shall also provide the necessary control for the jet-vane actuators during mid-course motor thrust.

2.15 Extension System

The extension system is composed of two parts, namely: (1) actuators capable of moving mechanically as necessary to accomplish mission requirements and (2) a pyrotechnic initiating system (Squib Firing Assembly). The first is composed of such items as pneumatic booms, extendible arms, solar panel actuators, etc. The second is used to initiate the pyrotechnic latching devices that constrain the extension devices until such time as they need be deployed. The pyrotechnic initiating system shall also be required to switch currents greater than those which can be manipulated by the Central Computer and Sequencer and to initiate the start and stop valves for midcourse motor firing. The pyrotechnic initiation system shall provide adequate safing to prevent inadvertant initiation consistent with reasonable reliability of operation.

2.16 Television Subsystem

The Television Subsystem will be contained in a structure that is mounted on top of the main spacecraft bus. The prime purpose of the T.V. Subsystem is to provide relatively high resolution close-up T.V. pictures of the lunar surface. The T.V. Subsystem is comprised primarily of the following components:

a. A structure which is used for support and environment protection

b. An assembly of T.V. cameras

c. An rf system composed of high power transmitters, modulators and encoding electronics

d. Event sequencing electronics

e. Self-sustaining power sources

The spacecraft's omniantenna will be rigidly mounted on top of the T.V. structure. RF energy from the T.V. Subsystem will be radiated from the spacecraft's high-gain antenna. The T.V. rf system shall not operate at a power level greater than 2 watts from any one source while on the launching pad. Certain T.V. Subsystem engineering data will be telemetered from the spacecraft's telemetry system. Warm-up power

will be switched from the T. V. subsystem's power sources to its electronics by a spacecraft stored command, when the spacecraft has arrived at significant altitude above the lunar surface. With the exception of certain discrete spacecraft commands, the T. V. Subsystem will be self-sustaining after initiation and until lunar impact. Maximum weight allowance of the T. V. Subsystem will be 315 pounds.

2.17 S-Band Ranging Experiment

A 2.3 gigacycle ranging experiment will be provided for Rangers 8 & 9 (missions P55 & P56) only. The experiment will use an S-band turn around transponder with no coding and be coupled into the spacecraft's high gain antenna along with the spacecraft L-band transponder and the T. V. Subsystem rf output. The ranging experiment is added on a non-interference basis only.

3.0 RANGER OPERATIONS AND GENERAL TEST PLAN (effect on spacecraft design)

3.1 Test Operations

3.1.1 Serial numbers should be assigned to all modules in a logical manner and a complete log should be kept of the modules performance throughout its entire history. This log will accompany the module to the Spacecraft Assembly Facility (SAF) and at AMR and will be maintained and be the responsibility of the user of the module.

3.1.2 The spacecraft system design will be verified in the JPL Spacecraft Assembly building and at the necessary environmental facilities.

3.1.2.1 Spacecraft system operation will be verified in the JPL SAF prior to shipment to AMR.

3.1.2.2 There will be a verification of the T. V. Subsystem design at JPL, both separately and in conjunction with the flight spacecraft.

3.1.3 RF and mechanical compatibility tests may be performed with Lockheed Sunnyvale personnel in attendance. Certain dynamic testing may be conducted at the LMSC facility using dynamic models of the spacecraft T. V. structure combination.

3.1.4 Units assigned for flight and delivered to the SAF AMR will be logged and kept under control by a single agency.

3.1.5 AMR SAF Checkout

Fueling and pressurization of the spacecraft in the explosive safe area will have to be done after removal from the SAF and prior to removal to the launching area.

Except for gross system tests, checkout, fueling and pressurization, design constraints do not permit extensive testing, trouble shooting, or component replacement beyond the AMR SAF checkout.

3.1.6 AMR Launch Site Operations

a. Reasonable temperature in the spacecraft will be maintained by air-conditioning until launch.

b. Provision to pump ethylene oxide freon gas mixture into the shroud should be provided pending establishment of any alternate sterilization techniques.

c. Safety procedures must be generated for problems associated with the pyrotechnic devices and liquid propellant systems.

d. Spacecraft functions must be capable of shutoff (in case of an abort) prior to the 2 inch lift-off separation.

e. Tests

1) Operations of the spacecraft at the launch complex will be confined to qualitative operation and loop checks.

2) There will be no manual access to the spacecraft at the launch complex. Failure requiring component replacement in a vital subsystem will normally result in a scrub since the spacecraft will have to be returned to the SAF or to the explosive-safe spacecraft area.

3) The principal monitoring of spacecraft performance will be done through telemetry.

4) Certain critical functions will be monitored by rf trailer, hangar and blockhouse equipment, the latter of which will also command selected spacecraft functions.

3.2 Midcourse Maneuver Constraints

The midcourse maneuver must be constrained to an Earth-probe-roll axis angle of 90° ±50°. Miss components will be corrected and time of flight will be corrected to the extent possible within the preceding constraint. The minimum velocity increment that will be imparted to the spacecraft is 120 fps.

Transmission of data is required during the midcourse maneuver. No data storage is to be provided, and during the maneuver the three-watt transmitter will be transmitting through the omniantenna. As the omniantenna has appreciable nulls along the roll axis of the spacecraft it is necessary to constrain the pointing of the spacecraft. In the event the midcourse maneuver must be performed on the second day, the above constraints are waived. Receipt of telemetry information is desirable, but cannot be held as a requirement.

4.0 SCIENTIFIC EXPERIMENTS

4.1 The scientific instruments mounted on the bus must be compatible with the spacecraft's power and telemetry subsystems.

4.2 The scientific experiments for RA-6, 7, 8 & 9 are shown in the following table:

Instrument	Experiment	Spec. Reference
Shielded and unshelded tissue equivalent ion chambers	Dosimeter	
Standard ion chamber	Ion energy levels	
Radiation counters	Radiation levels	

4.3 Science Data Conditioning

The science subsystem must provide its own telemetry data conditioning and be compatible with the Spacecraft's Data Encoder.

5.0 PACKAGING REQUIREMENTS

5.1 Packaging philosophy on RA-6, 7, 8 & 9 will be as follows:

5.1.1 A modular scheme of packaging of electronic equipment shall be used. The subassembly chassis shall be uniform in profile, and vary in width as necessary to accommodate the components. Uniform profile chassis will maintain interchangeability of subassemblies in order to accomplish mass and heat balance.

5.1.2 Interchangeability of Spacecraft Components

A few of the spacecraft subassemblies are designed and fabricated to be nominally interchangeable as, for example, the solar panels.

From the standpoint of the vendor and cognizant engineer, it is unsatisfactory to makr an interchangeable subassembly with a type number signifying that it is to be mated to the spacecraft at only one position.

In considering the spacecraft as a functioning system, however, it is essential to be able to distinguish among a number of similar subassemblies according to their position in the system.

The subassembly-spacecraft electrical interfaces will be marked on the spacecraft side by a system which indicates position and on the subassembly side by a system which indicates choice of position.

5.1.3 Electronic assemblies shall have the capability of being sealed in order to control:

a. Temperature of assemblies

b. Electrical problems

c. Mechanical problems

5.1.4 Pressurization requirements are the responsibility of individual package designs since no over-all spacecraft pressurization is provided.

5.1.5 Radiation protection other than spacecraft structure is the responsibility of individual package design.

5.2 Reference Designations for Spacecraft Components

5.2.1 In the interest of uniformity, reference designations for spacecraft components have been assigned according to the IRE Standards on Reference Designations (57 IRE 21.52). These are tabulated in the Design Parameter and Reference Designation Specification.

5.2.2 The IRE Standards describe two methods for assigning reference designations, i.e., the Block Numbering method and the Unit Numbering method has been adopted.

5.2.3 The method of designating interchangeable subassemblies is as shown:

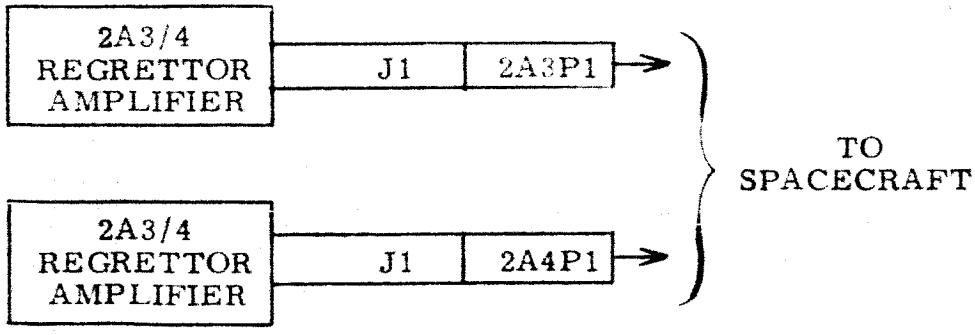

Note: Subassembly receptacle designations are incomplete. For complete identification, prefix the receptacle designation with the subassembly designation.

5.3 Equipment must be located so that the center of gravity requirement is maintained with minimum use of ballast.

6.0 STERILIZATION

Sterilization of RA-6, 7, 8 & 9 and T.V. Subsystems is a requirement. Every effort shall be exercised to accomplish this requirement to the greatest degree practical. Design problems encountered by this requirement shall be referred to the Spacecraft Project Engineer.

6.1 Internal Sterilization

Internal sterilization is accomplished by heating at 125°C stabilized for 24 hours or by gamma-ray irradiation at a level of 10^7 Roentgens. Internal sterilization must be achieved prior to assembly in spacecraft and in the case of spares, prior to shipment to AMR. Deviations must be requested from the Program Office.

6.2 External Sterilization

External sterilization is accomplished by soaking the entire spacecraft for 10 hours in an ethylene oxide-freon gas mixture just prior to launch. Any gas passing into payload shroud must pass through a filter to remove any solid matter exceeding .45 microns.

A manual valve or access port on shroud is required for introduction of the gas. The spacecraft-LMSC shroud and adapter assembly shall be purged of the sterilizing gas with dry nitrogen prior to launch.

7.0 INTERFACE PROBLEMS

7.1 Mechanical Interface

a. Attachment and in-flight separation of spacecraft. Separation should impart negligible angular impulse to the spacecraft, but sufficient linear impulse to assure clearance before the Agena's retro-maneuver.

b. Shroud requirements. The design of the spacecraft should be such as to be impervious to nominal shroud side-drift collisions at shroud ejection.

c. Aerodynamic problems resulting from spacecraft configurations. The design of the spacecraft shall introduce no new aerodynamic problems.

d. Structural requirements placed on vehicle and spacecraft.

e. Umbilicals (liquids and gases). No liquid or gas umbilicals are to be attached during normal launch procedure.

7.2 Electrical Interface

a. Umbilicals (wiring). Electrical access to the spacecraft T. V. Subsystem combination shall be through an umbilical to the Agena adapter, then to the spacecraft ring harness.

b. Electrical power and signal. All electrical power required for the T. V. Subsystem will be supplied within the T. V. Subsystem during flight. The spacecraft will provide redundant switch closures for the initiation of the Television Operational sequence. Exchange of telemetry signals, operational sequence signals, signal grounds, etc. between the T. V. Subsystem and the spacecraft bus will occur at a common junction point consisting of no more than two (2) electrical plugs. If more than one (1) plug is used, each should be individually and me chanically identifiable to avoid inadvertant cross-connection. RF coax connections shall not be made through these plugs, but shall be separately routed.

c. External access test connections may be used for any of the bus subsystems and the T. V. Subsystem. The location of the test connectors for the T. V. Subsystem should be at any convenient point on the base of the T. V. structure and in the areas above bus cases II, III, V or VI to provide accessibility when the solar panels are folded. Bus subsystem direct access connectors shall be located on the top of the case pans, as in previous Ranger designs.

7.3 Instrumentation Requirements (Pre-launch to Injection)

The Spacecraft-Agena separation information will be supplied by devices mounted within the Agena and will give indications of separation for all mechanical and electrical disconnects. These indications will be transmitted by the Agena telemetry link.

8.0 COMMUNICATION

8.1 Doppler data from the spacecraft transponder must be available for at least 15 minutes after injection occurs.

8.2 A means shall be provided by which rf transmission to and from the JPL omnidirectional antenna can be accomplished while the mated vehicle and spacecraft are on the launch pad and during the vehicle ascent prior to shroud ejection.

8.3 It is necessary to provide full power to the transmitter during cruise and all maneuvers. The magnitude and direction of the midcourse velocity correction and the two-axis, three mode terminal positioning maneuver will be transmitted from the Goldstone Facility.

8.4 The spacecraft transmitter design shall be compatible with the launch-to-injection ground receivers used at Cape Canaveral, the vehicle tracking station, and the Deep Space Instrumentation Facilities. The receiver is to be compatible with the Goldstone transmitter, and the transmitter in the launch-to-injection net.

8.5 A real-time command will be furnished to switch the spacecraft's telemetry output from the omni to the high-gain antenna and reverse with continuous selection option. The omniantenna will be used for the transmission of telemetry prior to earth acquisition by the high-gain antenna after injection and during the midcourse maneuver. Communication with the high-gain antenna shall not be lost during terminal maneuver.

8.6 Chassis ground for all subsystems shall be established at the transponder.

8.7 The transmitter shall not be operated at more than half power while the spacecraft is mated and on the launching pad. High power shall not be initiated prior to shroud ejection.

8.8 A rf coupler will be provided on the spacecraft to simultaneously couple power from both the spacecraft's transmitter and the T.V. Subsystem's rf source to the spacecraft's high-gain antenna. The coupler design should provide minimum losses for either source and should be capable of operating with either or both sources radiating.

8.9 The spacecraft's telemetry system shall data encode and transmit certain engineering information from the T.V. Subsystem from launch to initiation of midcourse maneuver and from completion of midcourse maneuver to lunar impact.

(Insert in Spacecraft Design Specification Book) System: M. R. Maynard

JET PROPULSION LABORATORY

Spec. No. RL-4-120A
10 May 1962

SUPERSEDES:
RL-4-120
19 January 1962

REVISED & REWRITTEN

FUNCTIONAL SPECIFICATION
RANGERS P-53 THROUGH P-56 (RA6-9) SPACECRAFT
DESIGN PARAMETERS & REFERENCE DESIGNATIONS

1.0 SCOPE

This specification is a control document for reference designations, the maximum weights, power and temperature range allotted to spacecraft components. The weight, power, and temperature range allotted for a specific article is the maximum allowed. Any decrease of weight and power, and increase of temperature range from that allotted is desirable.

2.0 REFERENCE DESIGNATIONS

2.1 Philosophy Considerations

Consistent with the approach that RA6-9 spacecraft remain as similar to the RA345 design as possible and within the same ground rules applicable to RA345, this specification also covers the identification and marking of the RA6-9 units. Any unit previously used on RA345 that is to be used on Rangers 6 through 9 which does not require modification, or requires modification that does not prevent it from being interchangeable with RA345 units retains the reference designation number assigned on the RA345 program. All new units, or units previously used on the RA345 program that require modification such that they are no longer interchangeable with RA345 components are assigned new numbers. Units which must change in design to accommodate the introduction of the Ranging Experiment on Rangers 8 & 9 will receive new reference designation numbers for use on those models.

2.2 Requirements

The names of the subassemblies called out under 5.0 are to be used in all documentation.

2.3 Designation Method

The reference designations for RA6-9 spacecraft components have been assigned based on the IRE "Standards on Reference Designations", i.e., 57IRE 21.S2, modified for the particular requirements of the Ranger program.

3.0 REQUIREMENTS

3.1 Necessary Marking Information

All spacecraft components listed under 5.0 shall be permanently and legibly identified with the following information:

		(Typical)
a.	Reference designation	7A3
b.	Plug or terminal designations	7A3J1 7A3J2
c.	Model number	RA6-9
d.	Serial number	021
e.	Drawing number or standard part number	D 315 2238

Components not listed under 5.0 shall be marked in accordance with JPL Specification 20002.

All nonflight components listed under 5.0 shall be identified by a red dot in a manner which is visible after spacecraft installation.

Reference designation and serial numbers of internally mounted transducers, shall appear on the unit in which they are mounted, adjacent to the units identification marking.

3.2 Optional Marking Information

In addition to the required marking information contained in 3.1, the following information may be included if desired:

a.	Manufacturer	JPL
b.	Purchase Order	
c.	Component Nomenclature	Antenna Drive Electronics
d.	(Etc.)	

3.3 Location of Marking

Information in 3.1 is to be located so that marking is visible when installed on spacecraft, unless its position is specified on the applicable drawings.

3.4 Components to be Marked

All components shall be marked as specified in 4.0 except as follows:

a. Components which do not have a suitable surface for identification or for which identification marking would interfere with temperature control characteristics, shall be individually tagged as specified in 4.4.

b. Components which are subjected to Quality Control Inspection may be ink-stamped or tagged, whichever is preferable and shall be identified with the inspection test procedure number, date of test, and inspector identification.

3.5 Drawings to be Marked

For components specified under 3.4-b, the markings shall appear also in the applicable installation drawing. It is desirable to insert replicas of all marked component surfaces in the installation drawings.

4.0 METHODS OF MARKING

4.1 Ink Stamping with Rubber Stamps

a. Use characters 3/16 of an inch high or higher whenever possible.

b. Clean parts with a suitable solvent so that the surface to be stamped is entirely free from grease and oil.

c. Stamp the part (using described materials) to produce a marking which is clean and legible with sharp, well-defined characters.

d. Use black ink for stamping unless insufficient contrast is secured with the background or unless other colors are specified. Where black is unsuitable and no other color is specified, use yellow.

e. Apply a transparent, protective coating to the marked area, only.

f. The materials described below, or materials with equivalent properties, shall be used for all ink stamping:

Ink, Opaque 73X (specify also, black or required color), Independent Ink Company, Gardena, California.

NOTE: These inks were selected for their permanency, good application properties, combined with fair to good stamp pad behavior and medium-fast drying. They have good adhesion to clean bare metals without etching the metal and are non-corrosive to aluminum alloys, magnesium, etc. They have good resistance to water, gasoline, lubricating oils, aliphatic hydrocarbons, and many maintenance cleaning and vapor degreasing compounds. They are non-bleeding when coated with lacquers, enamels, etc. They will not resist alcohols, esters, and ketones.

Ink Thinner, 73X, Independent Ink Company, Gardena, California. (Thinner is required to condition stamp pads and to clean stamps)

Protective Coating, Eccocoat EC 200, Emerson and Cuming, Pasadena, California.

This coating was selected for its permanency, transparency, degree of flexibility, ease of application, and low retention of volatile compounds. When applied and allowed to set at room temperature, the surface may be handled after six hours. At 150°F, this time is reduced to thirty minutes. Outgassing is hastened by such baking but should fall to an acceptable level within a few days without baking.

4.2 Impression Stamping with Metal Dies

a. Impression stamping is to be done only when specifically called out on the Engineering Drawing.

b. Location for stamping shall be as called out on the Engineering Drawing.

c. Use 1/8-inch characters unless otherwise specified.

d. Use metal backing blocks or other means of support centered under the area to be stamped unless the area is a thick section (1/2-inch or greater).

e. Letters and figures are to be rounded on the edges and free from sharp corners.

f. The impression should be uniform and of a minimum depth to give a legible number. Avoid over impression and marring of under surface in contact with back up block.

g. Molded cables shall be hot stamped when applicable.

4.3 Etching

a. Etching is to be done only when called out on the Engineering Drawing.

b. Location for stamping shall be as called out on the Engineering Drawing.

c. Use 1/8-inch characters unless otherwise specified.

d. Letters and figures are to be rounded on edges and free from sharp corners.

e. The depression should be uniform and of a minimum depth to give a legible number. Avoid unnecessarily deep depression.

4.4 Identification Tags

a. Use non-abrasive non-conductive tags bearing the part or assembly number. Tags must be capable of withstanding sterilization temperature of 125°C for 24 hours and ethylene-oxide gassing for 11 hours.

b. Attach tags securely to the part or assembly with approved twine in such a manner as not to interfere with installation or operation of the part. Attach tags to parts without holes by tying the twine around the part in the most suitable manner. Do not attach more than one tag to a part, except in the case where a part requires a test tag in addition to the identification tag.

4.5 Nameplates

The use of nameplates or identification plates is not acceptable.

4.6 Sterilization

Identification marking should be applied before the unit is heat sterilized. However, modification or re-work of ink stamping does not require re-heating, in that terminal gas sterilization will penetrate the coating. Identification tags should be pre-sterilized before application to a sterilized unit. In no instance should a unit be re-heated to sterilize any marking identification.

5.0 MASTER EQUIPMENT LIST

5.1 Reference designations and all pertinent design parameters are contained in the attached master equipment list.

6.0 SOURCES OF INFORMATION

6.1 The sources of information used in this specification are as follows:

Jet Propulsion Laboratory

20002	Process Specification, Identification, Missile Parts and Assemblies

The Institute of Radio Engineers

57 IRE 21.S2	Standards on Reference Designations

COMPONENT	REFERENCE DESIGNATION	COMPONENT LOCATION	WEIGHT LBS RA-6	WEIGHT LBS RA-7	WEIGHT LBS RA-8,9	ELECTRICAL POWER, DISSIPATION & SOURCES: [illegible]	DISSIPATES WATTS	PRIMARY BATTERY AMP. HOURS	SECONDARY BATTERY AMP. HOURS	SOLAR PANELS WATTS	THERMAL OPER. CONDITIONS: MIN. TEMP. °F	MAX. TEMP. °F	MAX. TEMP. CHANGE °F/MIN.	THERMAL NON-OPER. CONDITIONS: MIN. TEMP. °F	MAX. TEMP. °F	MIN. REQ'D. OPERATING LIFE HOURS
STRUCTURE	Unit 1		79.76	89.86	89.86											
CASE #1	1A11	A to B	3.63	3.62	3.62											
CASE #2	1A28	B to C	5.00	5.00	5.00											
CASE #3	1A29	C to D	3.62	3.62	3.62											
CASE #4	1A14	D to E	3.53	3.53	3.53											
CASE #5	1A15	E to F	4.06	4.06	4.06											
CASE #6	1A16	F to A	3.53	3.53	3.53											
MAIN HEX FRAME	1A31		40.30	40.30	40.30											
CABLING CLAMPS			0.19	0.19	0.19											
SOLAR PANEL SUPPORT	1A2/32	1A2 A	0.64	0.64	0.64											
SOLAR PANEL SUPPORT	1A3/33	1A3 B	0.64	0.64	0.64											
SOLAR PANEL SUPPORT	1A2/32	1A36 D	0.64	0.64	0.64											
SOLAR PANEL SUPPORT	1A3/33	1A37 E	0.64	0.64	0.64											
NITROGEN BOTTLE MOUNTS	1A38		1.62	1.62	1.62											
SHROUD BUMPERS	1A37		1.84	1.84	1.84											
RING HARNESS TRAY	1A30		0.90	0.90	0.90											
RING HARNESS SUPPORTS			0.45	0.45	0.45											
SCIENCE MOUNTS			2.00	11.60	11.60											
HIGH GAIN ANTENNA YOKE	1A6	On C	1.33	1.33												
HIGH GAIN ANTENNA YOKE	1A34	On C			1.33											
EARTH SENSOR SUN SHIELD	1A7	On C	1.13	1.13	1.13											
SOLAR PANEL ACTUATOR	1A9/10	1A9 A-B	1.11	1.11	1.11											
SOLAR PANEL ACTUATOR	1A9/10	1A10D-E	1.11	1.11	1.11											
MIDCOURSE MTR. THERMAL SHIELD	1A22	UPPER	0.50	0.50	0.50											
MIDCOURSE MTR. THERMAL SHIELD	1A23	LOWER	0.40	0.40	0.40						0	1800				
MIDCOURSE MOTOR JET VANE	1A24/27	1A24+Y									0	1800				
MIDCOURSE MOTOR JET VANE	1A24/27	1A25-Y									0	1800				
MIDCOURSE MOTOR JET VANE	1A24/27	1A26+X	(3)	(3)	(3)						0	1800				
MIDCOURSE MOTOR JET VANE	1A24/27	1A27-X														
ROTARY JOINT HOUSING	1A35	2A20/24	0.74	0.74	0.74											
EARTH SENSOR LIGHT HOOD ASSY	1A41															

COMPONENT	REFERENCE DESIGNATION	COMPONENT LOCATION	WEIGHT LBS. RA-6	WEIGHT LBS. RA-7	WEIGHT LBS. RA-8, 9	ELECTRICAL POWER, DISSIPATION & SOURCES: [illegible] WATTS	DISSIPATED WATTS	PRIMARY BATTERY AMP. HOURS	SECONDARY BATTERY AMP. HOURS	SOLAR PANELS WATTS	THERMAL OPER. CONDITIONS: MIN. TEMP. °F	MAX. TEMP. °F	MAX. TEMP. CHANGE °F/MIN.	THERMAL NON-OPER. CONDITIONS: MIN. TEMP. °F	MAX. TEMP. °F	MIN. REQ'D. OPERATING LIFE HOURS
L-BAND COMMUNICATIONS	Unit 2		33.76	33.76	35.22											
DIRECTIONAL ANTENNA	2A21		8.84	8.84												
DIRECTIONAL ANTENNA	2A23				10.30											
OMNI-ANTENNA	2A22		3.73	3.73	3.73											
ROTARY JOINT	2A20		1.24	1.24												
ROTARY JOINT	2A24				1.24											
TRANSPONDER I	2A11	Case #2	5.00	5.00	5.00	[illegible]	14.0				32	158				
TRANSPONDER II	2A12	Case #2	5.00	5.00	5.00	[illegible]	14.0				32	158				
TRI-CAVITY ASSEMBLY	2A13	Case #2	2.95	2.95	2.95	11	2 [illegible]				32	158				
ANTENNA TRANS. SWITCH & J-BOX	2A17	Case #2	1.50	1.50	1.50	2.24	2.24				32	158				
DIRECTIONAL COUPLER	2A15	Case #2	1.25	1.25	1.27		8.7				32	158				
DIPLEXER	2A14	Case #2	1.25	1.25	1.25						32	158				
CIRCULATOR & POWER MONITOR	2A25	Case #2	3.00	3.00	3.00	0	6.0				32	158				
COMMAND SUBSYSTEM	Unit 3		3.24	3.24	3.24	[illegible]	2.50									
COMMAND DETECTOR	3A1	Case #1	1.52	1.52	1.52	[illegible]	0.63				32	158				
COMMAND DECODER	3A2	Case #1	1.72	1.72	1.72	[illegible]	1.87				32	158				

COMPONENT	REFERENCE DESIGNATION	COMPONENT LOCATION	WEIGHT LBS. RA-6	WEIGHT LBS RA-7	WEIGHT LBS RA-8,9	ELECTRICAL POWER, DISSIPATION & SOURCES: [illegible]	DISSIPATED WATTS	PRIMARY BATTERY AMP. HOURS	SECONDARY BATTERY AMP. HOURS	SOLAR PANELS WATTS	THERMAL OPER. CONDITIONS: MIN. TEMP. °F	MAX. TEMP. °F	MAX. TEMP. CHANGE °F/MIN.	THERMAL NON-OPER. CONDITIONS: MIN. TEMP. °F	MAX. TEMP. °F	MIN. REQ'D. OPERATING LIFE HOURS
POWER SUBSYSTEM	Unit 4		93.63	93.63	95.63											
SOLAR PANEL ASSEMBLY	4A9/10	4A9A-B	21.05	21.05	21.05						83	102				
SOLAR PANEL ASSEMBLY	4A9/10	4A10D-E	21.05	21.05	21.05						83	102				
POWER SWITCHING & LOGIC	4A1	Case #6	2.22	2.22	2.22		4.6				32	158				
BOOST REGULATOR	4A2	Case #6	3.38	3.38	[illegible]		[illegible]				32	158				
ATTITUDE CONTROL CONVERTER	4A3	Case #4	2.02	2.02	[illegible]		6.2				32	158				
L-BAND CONVERTER	4A4	Case #1	2.28	2.28	[illegible]		[illegible]				32	158				
COMMAND CONVERTER	4A5	Case #1	1.62	1.62	[illegible]		2				32	158				
CC&S INVERTER	4A6	Case #1	1.87	1.87	[illegible]		2.5				32	158				
DATA ENCODER CONVERTER	4A7	Case #5	1.02	1.02	1.02		[illegible]				32	158				
POWER SYNCHRONIZING	4A12	Case #1	1.80	1.80	[illegible]		[illegible]				32	158				
400~ 1φ INVERTER	4A13	Case #4	2.24	2.24	2.24		[illegible]				32	158				
400~ 3φ INVERTER	4A14	Case #4	5.44	5.44	[illegible]		[illegible]				32	158				
LAUNCH & MANEUVER BATTERY	4A15	Case #6	24.74	24.74	[illegible]						50	130				
SOLAR PANEL EVALUATION	4A16	on 4A10	[illegible]	[illegible]	[illegible]											
S-BAND CONVERTER	4A17	Case #3			[illegible]		[illegible]				32	158				
SCIENCE INVERTER	4A8	Case #3	1.84	1.84	[illegible]		[illegible]				32	158				
BATTERY TEMP. TRANSDUCER (T/M)	4TT1	on 4A15														
4A2 TEMP. TRANSDUCER	4TT3	on 4A2														
4A3 TEMP. TRANSDUCER	4TT4	on 4A3														
BATTERY TEMP. TRANSDUCER (GSE)	4TT6	on 4A15														
4A10 FRONT TEMP. TRANS.	4TT7	on 4A10														
4A10 BACK TEMP. TRANS.	4TT8	on 4A10														
4A9 FRONT TEMP. TRANS.	4TT9	on 4A9														
4A9 BACK TEMP. TRANS.	4TT10	on 4A9														
4A1 TEMP. TRANSDUCER	4TT11	on 4A1														
4A7 TEMP. TRANSDUCER	4TT12	on 4A7														

COMPONENT	[illegible]	[illegible]	WEIGHT LBS. RA-[illegible]	WEIGHT LBS. RA-[illegible]	WEIGHT LBS. RA-[illegible]	[illegible]	[illegible]	PRIMARY BATTERY AMP. HOURS	SECONDARY BATTERY AMP. HOURS	SOLAR PANELS WATTS	NORMAL OPER. CONDITIONS MIN. TEMP. °F	NORMAL OPER. CONDITIONS MAX. TEMP. °F	NORMAL OPER. CONDITIONS MAX. TEMP. CHANGE °F/MIN.	THERMAL NON-OPER. CONDITIONS MIN. TEMP. °F	THERMAL NON-OPER. CONDITIONS MAX. TEMP. °F	[illegible] REQ'D. OPERATING LIFE HOURS
CENTRAL COMPUTER & SEQUENCER	Unit 5		11.76	11.[illegible]	11.[illegible]		11.[illegible]									
CENTRAL CLOCK	5A1	Case #1	1.20	1.20	1.20	[illegible]	[illegible]				14	179				
LAUNCH CLOCK	5A2	Case #1	1.56	1.56	1.[illegible]	[illegible]	0.55				14	179				
MANEUVER CLOCK	5A3	Case #1	1.22	1.22	1.22	[illegible]	[illegible]				14	179				
MANEUVER DURATION	5A4	Case #1	1.35	1.35	1.35	[illegible]	[illegible]				14	179				
MANEUVER OUTPUT	5A5	Case #1	1.54	1.54	1.54	[illegible]	[illegible]				14	179				
ACCELERATION INTEGRATION	5A6	Case #1	1.31	1.31	1.31	[illegible]	[illegible]				14	179				
INPUT DECODER	5A7	Case #1	1.14	1.14	1.14	[illegible]	[illegible]				14	179				
PULSE SEQUENCER	5A8	Case #1	1.36	1.36	1.36	[illegible]	[illegible]				14	179				
CC&S TRANSFORMER-RECTIFIER	5A9	Case #1	1.[illegible]	1.[illegible]	1.[illegible]	[illegible]	[illegible]				14	179				
DATA ENCODER SUBSYSTEM	Unit 6		18.19	18.19	18.19	[illegible]	10.[illegible]									
VCO MODULE I	6A1	Case #5	1.03	1.03	1.03	[illegible]	1.3[illegible]				14	180				
VCO MODULE II	6A2	Case #5	1.41	1.41	1.41	[illegible]	1.3[illegible]				14	180				
COMMUTATOR I	6A5	Case #5	1.38	1.38	1.38	[illegible]	[illegible]				14	180				
COMMUTATOR II	6A6	Case #5	1.87	1.87	1.87	[illegible]	0.10				14	180				
COMMUTATOR III	6A7	Case #5	1.70	1.70	1.70	[illegible]	[illegible]				14	180				
COMMUTATOR IV	6A8	Case #5	1.68	1.68	1.68	[illegible]	0.10				14	180				
D. C. AMPLIFIER	6A10	Case #5	0.89	0.89	0.89	[illegible].60	0.60				14	180				
EVENT CODER	6A11	Case #5	0.99	0.99	0.99	[illegible]	0.27				14	180				
TEMPERATURE BRIDGE I	6A12	Case #5	1.05	1.05	1.05	[illegible]	2.00				14	180				
TEMPERATURE BRIDGE II	6A13	Case #5	1.19	1.19	1.19	[illegible]	1.88				14	180				
VCO MODULE III	6A15	Case #5	0.91	0.91	0.91	[illegible]	1.04				14	180				
BINARY OSCILLATOR	6A16	Case #5	1.42	1.42	1.42	[illegible]	[illegible]				14	180				
SIGNAL CONDITIONING	6A17	Case #5	1.27	1.27	1.27	[illegible]	[illegible]				14	180				
DATA SELECTOR	6A18	Case #5	1.40	1.40	1.40	[illegible]	0.30				14	180				

COMPONENT	[illegible]	[illegible]	[illegible]	[illegible]	[illegible]	[illegible]	[illegible]	[illegible]	[illegible]	[illegible]	THERMAL OPER. CONDITIONS MAX. TEMP. °F	THERMAL OPER. CONDITIONS MAX. TEMP. CHANGE °F/MIN.	THERMAL OPER. CONDITIONS MIN. TEMP. °F	THERMAL OPER. CONDITIONS MAX. TEMP. °F	MIN. REQ'D. OPERATING LIFE HOURS
ATTITUDE CONTROL SUBSYSTEM	[illegible]		[illegible]	[illegible]	[illegible]										
GYRO & CAPACITOR	7A1	Case #4	[illegible]	[illegible]	[illegible]					32	130				
GYRO ELECTRONICS	7A2	Case #4	[illegible]	[illegible]	[illegible]					32	158				
ANTENNA DRIVE ELECTRONICS	7A3	Case #4	[illegible]	[illegible]	[illegible]					32	158				
SWITCHING AMPLIFIER	7A4	Case #4	[illegible]	[illegible]	[illegible]					32	158				
AUTOPILOT ELECTRONICS	7A5	Case #4	[illegible]	[illegible]	[illegible]					32	158				
ATTITUDE JET & VALVE ASSY.	7A6	on C	[illegible]	[illegible]	[illegible]					32	158				
ATTITUDE JET & VALVE ASSY.	7A7	on F	[illegible]	[illegible]	[illegible]					32	158				
ANTENNA MOTOR & HOUSING	7A8	on C	[illegible]	[illegible]	[illegible]					32	158				
EARTH SENSOR	7A9	on C	[illegible]	[illegible]	[illegible]					14	50				
PRIMARY SUN SENSOR	7A10	on B	[illegible]	[illegible]	[illegible]					14	50				
PRIMARY SUN SENSOR	7A11	on C	[illegible]	[illegible]	[illegible]					14	50				
PRIMARY SUN SENSOR	7A12	on E	[illegible]	[illegible]	[illegible]					14	50				
PRIMARY SUN SENSOR	7A13	on F	[illegible]	[illegible]	[illegible]					14	50				
SECONDARY SUN SENSOR	7A14	on 4A9	[illegible]	[illegible]	[illegible]					14	50				
SECONDARY SUN SENSOR	7A15	on 4A10	[illegible]	[illegible]	[illegible]					14	50				
ATTITUDE JET & VALVE ASSY.	7A16	Y on E	[illegible]	[illegible]	[illegible]					32	158				
ATTITUDE JET & VALVE ASSY.	7A17	Y on A	[illegible]	[illegible]	[illegible]					32	158				
N_2 TANK PRESSURE TRANS.	7A18		[illegible]	[illegible]	[illegible]										
ACCELEROMETER	7A21	Case #4	2.22	2.22	2.32					68	158				
N_2 PRESSURE BOTTLE	7A22	Adj. to B	1.66	1.66	1.66										
N_2 PRESSURE BOTTLE	7A23	Adj. to C	1.66	1.66	1.66										
N_2 PRESSURE BOTTLE	7A24	Adj. to E	1.66	1.66	1.66										
N_2 PRESSURE REGULATOR	7A25		1.96	1.96	1.96										
N_2 TANK TEMPERATURE TRANS.	7TT1		↑	↑	↑										
EARTH SENSOR TEMP. TRANS.	7TT2														
SUN SENSOR 7A10 DIFF. TEMP. TRANS.	7TT3														
SUN SENSOR 7A11 TEMP. TRANSD	7TT4		(1)	(1)	(1)										
SUN SENSOR 7A13 TEMP. TRANSD	7TT5														
SUN SENSOR 7A12 DIFF. TEMP. TRANS.	7TT6														
GYRO TEMP. TRANSDUCER	7TT7														
N_2 CASE TEMP. TRANSDUCER	7TT8		↓	↓	↓										
NITROGEN GAS			2.64	2.64	2.64										
TUBING AND FITTINGS			1.18	1.18	1.18										

COMPONENT	REFERENCE DESIGNATION	COMPONENT LOCATION	WEIGHT LBS. RA-6	WEIGHT LBS. RA-7	WEIGHT LBS. RA-8,9	ELECTRICAL POWER DISSIPATION & METERS: LOAD WATTS	DISSIPATED WATTS	PRIMARY BATTERY AMP. HOURS	SECONDARY BATTERY AMP. HOURS	SOLAR PANELS WATTS	THERMAL OPER. CONDITIONS: MIN. TEMP. °F	MAX. TEMP. °F	MAX. TEMP. CHANGE (F/MIN.)	THERMAL NON-OPER. CONDITIONS: MIN. TEMP. °F	MAX. TEMP. °F	MAX. REQ'D. OPERATING LIFE HOURS
EXTENSION SUBSYSTEM	Unit 8		5.53	5.53	5.53											
SQUIB FIRING ASSEMBLY	8A51	Case #6	4.25	4.25	4.25	(1)	(1)									
UNFOLD SENSOR, 4A9	8A69	on 4A9	0.20	0.20	0.20											
UNFOLD SENSOR, 4A10	8A70	on 4A10	0.20	0.20	0.20											
UNFOLD SQUIB, 4A9	8SQ1	above A	0.03	0.03	0.03											
UNFOLD SQUIB, 4A9	8SQ2	above B	0.03	0.03	0.03											
UNFOLD SQUIB, 4A10	8SQ3	above D	0.03	0.03	0.03											
UNFOLD SQUIB, 4A10	8SQ4	above E	0.03	0.03	0.03											
UNFOLD SQUIB, 4A9	8SQ21	above A	0.03	0.03	0.03											
UNFOLD SQUIB, 4A9	8SQ22	above B	0.03	0.03	0.03											
UNFOLD SQUIB, 4A10	8SQ23	above D	0.03	0.03	0.03											
UNFOLD SQUIB, 4A10	8SQ24	above E	0.03	0.03	0.03											
PIN PULLER, 4A9	8PP1	above A	0.16	0.16	0.16											
PIN PULLER, 4A9	8PP2	above B	0.16	0.16	0.16											
PIN PULLER, 4A10	8PP3	above D	0.16	0.16	0.16											
PIN PULLER, 4A10	8PP4	above E	0.16	0.16	0.16											
OPEN SQUIB, N_2 VALVE	8SQ36	↑	↑	↑	↑											
SHUT SQUIB, N_2 VALVE	8SQ37															
OPEN SQUIB, FUEL VALVE	8SQ39	on M/C Motor	(2)	(2)	(2)											
SHUT SQUIB, FUEL VALVE	8SQ42															
OPEN SQUIB, OXIDIZER VALVE	8SQ44	↓	↓	↓	↓											

COMPONENT	[illegible]	TEMP. EST. LOCATION	WEIGHT LBS RA-6	WEIGHT LBS RA-7	WEIGHT LBS RA-8	[illegible]	[illegible]	PRIMARY BATTERY AMP. HOURS	SECONDARY BATTERY AMP. HOURS	SOLAR PANELS WATTS	THERMAL OPER. CONDITIONS MIN. TEMP. °F	THERMAL OPER. CONDITIONS MAX. TEMP. °F	THERMAL OPER. CONDITIONS MAX. TEMP. CHANGE °F/MIN.	THERMAL NON-OPER. CONDITIONS MIN. TEMP. °F	THERMAL NON-OPER. CONDITIONS MAX. TEMP. °F	MISS. REQ'D. OPERATING LIFE HOURS
CABLING SUBSYSTEM	Unit 2		42.50	[illegible]	[illegible]											
RING HARNESS	9W41	on 1A31	[illegible]													
RING HARNESS	9W47	on 1A31		[illegible]	[illegible]											
MIDCOURSE MOTOR HARNESS	9W3	on MCM	1.54	1.54	1.54											
MIDCOURSE TRANSDUCER HARNESS	9W36	on MCM	1.56	1.56	[illegible]											
MIDCOURSE IGNITION HARNESS	9W4[illegible]	on MCM	1.54	1.54	1.54											
SQUIB HARNESS	9W4[illegible]	on 1A31	1.27	1.27	1.95											
CASE #1 COMMAND HARNESS	9W18	Case #1	1.61	1.61	1.62											
CASE #1 C. C. & S. HARNESS	9W52	Case #1	2.27	2.27	2.27											
CASE #2 COMMUNICATIONS Harness No. 1	9W42	Case #2	2.75	2.75	2.75											
CASE #2 COMMUNICATIONS Harness No. 2	9W48	Case #2	0.42	0.42	1.42											
CASE #3 S-BAND HARNESS	9W43	Case #3			3.50											
CASE #3 SCIENCE HARNESS	9W53	Case #3	0.60													
CASE #3 SCIENCE DCS HARNESS	9W38	Case #3		2.00	2.00											
CASE #4 ATTITUDE CONT. HARNESS	9W14	Case #4	2.34	2.34	2.34											
CASE #5 DATA ENCODER HARNESS	9W40	Case #5	4.47	4.47	4.47											
CASE #6 POWER HARNESS	9W16	Case #6	1.40													
CASE #6 POWER HARNESS	9W54	Case #6		2.00	2.00											
EARTH SENSOR HARNESS	9W5	At C	0.32	0.32	0.32											
ION CHAMBER HARNESS	9W39		0.59													
COAX, TV SUBSYSTEM TO CASE#2	9W37		5.50	5.50	5.50											
COAX, CASE #2 to OMNI-ANTENNA	9W44		2.00	2.00	2.00											
COAX, S-BAND to BAND SEPARATOR	9W46				0.25											
COAX, CASE #2 to ROTARY JOINT	9W55		0.50	0.50	0.50											
COAX, ROTARY JOINT to DIR. ANT.	9W56		0.50	0.50												
COAX, ROTARY JOINT to DIR. ANT.	9W57				0.50											
COAX, DIPLEXER to TRANSPONDER	9W59	Case #2	0.23	0.23	0.23											
COAX, DIPLEXER TO CIRCULATOR	9W60	Case #2	0.40	0.40	0.40											
COAX, L. G. CAVITY to CIRCULATOR	9W61	Case #2	0.30	0.30	0.30											
COAX, H. G. CAVITY to CIRCULATOR	9W62	Case #2	0.30	0.30	0.30											
COAX, DRVR. CAVITY to TRANSP. Cavities	9W63	Case #2	0.23	0.23	0.23											
COAX, DRVR. CAVITY to H. G. & L.G. Case #2	9W64	Case #2	0.40	0.40	0.40											
COAX. DIRECTIONAL COUPLER to	9W65	Case #2	0.20	0.20	0.20											
COAX. CIRCLTR TO DIR. COUPLER	9W66	Case #2	0.10	0.10	0.10											

COMPONENT	REFERENCE DESIGNATION	COMPONENT LOCATION	WEIGHT LBS RA-6	WEIGHT LBS RA-7	WEIGHT LBS RA-8, 9	ELECTRICAL POWER, DISSIPATION & SOURCES: POWER WATTS	DISSIPATED WATTS	PRIMARY BATTERY AMP. HOURS	SECONDARY BATTERY AMP. HOURS	SOLAR PANELS WATTS	THERMAL OPER. CONDITIONS: MIN. TEMP. °F	MAX. TEMP. °F	MAX. TEMP. CHANGE °F/MIN.	THERMAL NON-OPER. CONDITIONS: MIN. TEMP. °F	MAX. TEMP. °F	MIN. REQ'D. OPERATING LIFE HOURS
CABLING SUBSYSTEM (CONTINUED)																
ION CHAMBER HARNESS	9W67			0.30	0.80											
COSMIC DUST EXP. HARNESS	9W68			1.00	1.00											
MAGNETOMETER HARNESS	9W69			0.20	0.30											
LOW ENERGY ION EXP. HARNESS	9W70			0.60	0.60											
ELECTRON FLUX EXP. HARNESS	9W71			0.80	0.80											
ELECTRON PROTON SPECT. HRNS	9W72			0.80	0.80											
LOW ENERGY SOLAR PROTON HRNS	9W73			0.80	0.80											
PARTICLE FLUX DETECTORS HRNS	9W74			0.80	0.80											

COMPONENT	[illegible]	[illegible]	[illegible]	[illegible]	[illegible]	[illegible]	[illegible]	[illegible]	[illegible]	[illegible]	MIN. TEMP. °F	MAX. TEMP. °F	MAX. TEMP. RANGE °F	MIN. TEMP. °F	MAX. TEMP. °F	[illegible]
PROPULSION SUBSYSTEM	Unit 10		[illegible]	[illegible]	[illegible]											
FUEL			21.[illegible]	21.[illegible]	21.[illegible]						35	165				
M/C NITROGEN GAS			[illegible]	[illegible]	[illegible]						35	165				
FUEL VALVE	10A1		↑	↑	↑						-60	165				
M/C NITROGEN VALVE	10A2										-60	165				
+Y YAW ACTUATOR	10A3										32	500				
-Y YAW ACTUATOR	10A4										32	500				
+X PITCH ACTUATOR	10A5										32	500				
-X PITCH ACTUATOR	10A6										32	500				
OXIDIZER TANK & VALVE	10A7		25.[illegible]	25.[illegible]	25.[illegible]						13	165				
FUEL TANK PRESS. TRANSDUCER	10A8															
M/C N_2 TANK PRESS. TRANSDUCER	10A9															
MAIN FRAME & STRUCTURE	10A10										35	165				
M/C N_2 TANK	10A11										0	200				
M/C N_2 PRESSURE REGULATOR	10A12										35	165				
FUEL TANK ASSEMBLY	10A13										0	165				
ROCKET ENGINE & CATALYST	10A14		↓	↓	↓											
ROCKET ENGINE WALL TEMP. TRNS.	10TT1		↑	↑	↑		↑									
FUEL TANK TEMP. TRANSDUCER	10TT2															
M/C N_2 TANK TEMP. TRANSDUCER	10TT3		1	1	1		1									
-Y YAW ACTUATOR TEMP. TRANS.	10TT4															
+Y YAW ACTUATOR TEMP. TRANS.	10TT5		↓	↓	↓		↓									
TEMPERATURE CONTROL SUBSYSTEM	Unit 11		1	1	1		1									
TEMP. CONT. TEMP. TRANSDUCER	11TT1		1	1	1		1									

COMPONENT	REFERENCE DESIGNATION	COMPONENT LOCATION	WEIGHT LBS. RA-6	WEIGHT LBS. RA-7	WEIGHT LBS. RA-8, 9	ELECTRICAL POWER, DISSIPATION & SOURCES: DRAWN WATTS	DISSIPATED WATTS	PRIMARY BATTERY AMP. HOURS	SECONDARY BATTERY AMP. HOURS	SOLAR PANELS WATTS	THERMAL OPER. CONDITIONS: MIN. TEMP. °F	MAX. TEMP. °F	MAX. TEMP. CHANGE °F/MIN.	THERMAL NON-OPER. CONDITIONS: MIN. TEMP. °F	MAX. TEMP. °F	MIN. REQ'D. OPERATING LIFE HOURS
SCIENCE SUBSYSTEM	Unit 20		1.88	24.20	24.20											
ION CHAMBER	20A2		0.88	0.88	0.88	[illegible]					14	179				
PARTICLE FLUX DETECTORS	20A3			2.12	2.12						14	179				
DATA CONDITIONING MODULE I	20A4			↑	↑						14	179				
DATA CONDITIONING MODULE II	20A5			4.50	4.50						14	179				
DATA CONDITIONING MODULE III	20A6										14	179				
DATA CONDITIONING MODULE IV	20A7			↓	↓						14	179				
SCIENCE TRANSFORMER-RECTIFIER	20A8			1.50	1.50	[illegible]	[illegible]				32	158				
ION CHAMBER T/R & WAVE SHAPER	20A9		1.00													
COSMIC DUST	20A10			2.50	2.50		0.25									
MAGNETROMETER SEARCH COIL	20A11			3.00	2.50		1.00									
LOW ENERGY IONS	20A12			3.00	3.00	[illegible]	1.00									
ELECTRON FLUX	20A13			1.50	1.50	1.25	0.25									
ELECTRON PROTON SPECTROMETER	20A14			4.00	4.00	1.[illegible]	0.95									
LOW ENERGY SOLAR PROTON	20A15			2.20	2.20	1.[illegible]	0.40									

COMPONENT	REFERENCE DESIGNATION	COMPONENT LOCATION	WEIGHT LBS. RA-6	WEIGHT LBS RA-7	WEIGHT LBS. RA-8,9	ELECTRICAL POWER, DISSIPATION & SOURCES					THERMAL OPER. CONDITIONS			THERMAL NON-OPER. CONDITIONS		MIN. REQ'D. OPERATING LIFE HOURS
						[illegible]	[illegible] WATTS	PRIMARY BATTERY AMP. HOURS	SECONDARY BATTERY AMP. HOURS	SOLAR PANELS WATTS	MIN. TEMP. °F	MAX. TEMP. °F	MAX. TEMP. CHANGE °F/MIN.	MIN. TEMP. °F	MAX. TEMP. °F	
TELEVISION SUBSYSTEM	Unit 30		350.00	350.00	350.00											
CAMERA ASSEMBLY	30A1		38.00	38.00	38.00											
CAMERA ELECTRONICS (P1)	30A2		8.50	8.50	8.50											
CAMERA ELECTRONICS (P2)	30A3		8.00	8.00	8.00											
CAMERA ELECTRONICS (P2)	30A4		8.00	8.00	8.00											
CAMERA ELECTRONICS (P2)	30A5		8.00	8.00	8.00											
CAMERA ELECTRONICS (F)	30A6		8.00	8.00	8.00											
CAMERA ELECTRONICS (F)	30A7		8.00	8.0	[illegible]											
VIDEO COMBINER	30A8		2.12	2.12	[illegible]											
SEQUENCER	30A9		14.59	14.[illegible]	14.[illegible]											
BATTERY No. 1	30A10		44.20	44.20	44.20											
BATTERY No. 2	30A11		44.20	44.20	44.20											
REGULATOR	30A12		0.54	0.54	0.54											
COMMAND SWITCH	30A13		2.00	2.00	2.00											
TRANSMITTER MODULATOR #1	30A14		4.00	4.00	4.00											
POWER AMPLIFIER #1	30A15		1.40	1.40	1.40											
TRANSMITTER POWER SUPPLY #1	30A16		11.88	11.88	11.88											
CRUISE MODE REGULATOR	30A17		2.38	2.38	2.38											
SIGNAL SAMPLER #1	30A18		0.13	0.13	0.13											
TRANSMITTER MODULATOR #2	30A19		4.00	4.00	4.00											
POWER AMPLIFIER #2	30A20		1.40	1.40	1.40											
TRANSMITTER POWER SUPPLY #2	30A21		11.88	11.88	11.88											
SIGNAL SAMPLER #2	30A23		0.13	0.13	0.13											
FOUR PORT HYBRID	30A24		1.25	1.25	1.25											
DUMMY LOAD	30A25		1.08	1.08	1.08											
TELEMETRY UNIT	30A26		10.68	10.68	10.68											
TEMPERATURE SENSOR	30A27		0.40	0.40	0.40											
SEQUENCER POWER SUPPLY	30A28		13	13	13											
TELEMETRY PROCESSOR #1	30A29		0.43	0.43	0.43											
TELEMETRY PROCESSOR #2	30A30		0.43	0.43	0.43											

COMPONENT	REFERENCE DESIGNATION	COMPONENT LOCATION	WEIGHT LBS. RA-6	WEIGHT LBS RA-7	WEIGHT LBS RA-8	ELECTRICAL POWER, DISSIPATION & SOURCES: DISSIPATION WATTS	PRIMARY BATTERY AMP. HOURS	SECONDARY BATTERY AMP. HOURS	SOLAR PANELS WATTS	THERMAL OPER. CONDITIONS: MIN. TEMP. °F	MAX. TEMP. °F	MAX. TEMP. CHANGE °F/MIN.	THERMAL NON-OPER. CONDITIONS: MIN. TEMP. °F	MAX. TEMP. °F	MIN. REQ'D. OPERATING LIFE HOURS
TELEVISION SUBSYSTEM (CONTINUED)															
STRUCTURE			52.44	52.44	52.44										
SHROUD			8.63	8.63	8.63										
SHROUD SCREWS (670)			2.68	2.68	2.68										
CAMERA BRACKET			6.63	6.63	6.63										
ELECTRICAL HARNESS			13.00	13.00	13.00										
HAT SECTION			4.81	4.81	4.81										
CONTINGENCY			10.12	10.19	10.19										
S-BAND RANGING SUBSYSTEM	Unit 31				16.75	8.0									
TRANSPONDER I	31A1	Case #3			5.25	5.5				32	158				
TRANSPONDER II	31A2	Case #3			5.25					32	158				
TRANSPONDER III	31A3	Case #3			3.00	1.5				32	158				
ISOLATOR	31A4	Case #3			1.00					32	158				
DIPLEXER	31A5	Case #3			1.00					32	158				
BAND SEPARATOR	31A6	Case #2			1.25					32	158				

COMPONENT	[illegible]	[illegible]	WEIGHT LBS. RA-[illegible]	WEIGHT LBS. RA-[illegible]	WEIGHT LBS. RA-8, 9	[illegible]	[illegible]	PRIMARY BATTERY AMP. HOURS	SECONDARY BATTERY AMP. HOURS	SOLAR PANELS WATTS	THERMAL OPER. CONDITIONS MIN. TEMP. °F	MAX. TEMP. °F	MAX. TEMP. CHANGE °F/MIN.	THERMAL NON-OPER. CONDITIONS MIN. TEMP. °F	MAX. TEMP. °F	MIN. REQ'D. OPERATING LIFE HOURS
SUMMARY																
STRUCTURE			79.76	[illegible]	89.36											
L-BAND COMMUNICATIONS			33.7[illegible]	33.7[illegible]	3[illegible].22											
COMMAND SUBSYSTEM			3.24	3.24	3.24											
POWER SUBSYSTEM			93.63	93.63	95.33											
CC&S			11.[illegible]	11.7[illegible]	11.76											
DATA ENCODER SUBSYSTEM			18.1[illegible]	18.19	18.19											
ATTITUDE CONTROL SUBSYSTEM			3[illegible].05	3[illegible].05	3[illegible].05											
EXTENSION SUBSYSTEM			[illegible]	[illegible]	[illegible].53											
CABLING SUBSYSTEM			42.58	5[illegible]	56.34											
PROPULSION SUBSYSTEM			47.76	47.76	47.76											
SCIENCE SUBSYSTEM			1.88	24.20	24.20											
TELEVISION SUBSYSTEM			350.00	350.00	350.00											
S-BAND RANGING SUBSYSTEM					16.75											
SUBTOTAL			727.39	768.45	792.66											
BALLAST			16.75	16.75												
GROSS WEIGHT			744.14	78[illegible].20	792.66											
JUSTIFICATION WEIGHT																
ACTUAL WEIGHT (JPL)																
MODIFICATION WEIGHT																
ACTUAL WEIGHT (AMR)																

NOTES:

(1) Weight is included in the weight of the component the transducer is used on.

(2) Ballast may be required on Rangers 6 & 7 for uniformity of spacecraft moments-of-inertia. Weight of ballast not to exceed weight of component it represents.

(3) Weights are included in the midcourse motor weight.

(4) Power for all temperature transducers is included in the power for the data encoder.

(5) 2 watts of dissipation in the gyro and capacitors is furnished by the gyro electronics.

(6) 4A4 must be capable of taking 2.24 w spike over and above the load.

(7) 4A5 must be capable of taking 1.47 w spike over and above the load.

(8) Input wattage to 2A25 consists of rf from two 60 watt television transmitters and the 3 watt L-band transmitter.

(9) Dissipation indicated for 2A15 is rf and exists only when the system is feeding the directional antenna.

(10) Power is drawn by 8A51 only during squib events and varies depending upon the event. Reference Pyrotechnics Subsystem Functional Specification.

(11) Input watts to power devices are maximum drawn during the mission. See Power Supply Subsystem Functional Specification for Mission Power Profile.

(12) The television subsystem is completely self-powered.

(13) Weight is included as part of 30A9 weight.

	Wt. lb.	x in.	y in.	z in.	I_{xx} slug ft^2	I_{yy} slug ft^2	I_{zz} slug ft^2	I_{xy}	I_{yz} slug ft^2	I_{xz}
Launch Solar Panels H.G. Antenna & 100% Fuel	756.48	0.07	0.04	471.58	61.75	61.17	26.80	3.19	6.12	4.35
Before Midcourse Solar Panels Open H. G. Antenna 90° 100% Fuel	756.48	0.07	-0.41	473.61	70.94	90.69	53.20	-0.15	-4.63	-0.11
Midcourse Solar Panels Open H. G. Antenna 180° 100% Fuel	756.48	0.07	-0.70	473.13	70.03	85.56	57.42	-0.14	-3.11	-0.11
After Midcourse Solar Panels Open H. G. Antenna 90° 50% Fuel	749.18	0.08	-0.42	473.53	70.84	90.59	53.19	-0.15	-4.64	-0.11
Terminal Solar Panels Open H. G. Antenna 135° 50% Fuel	749.18	0.08	-0.65	473.36	71.55	88.09	56.40	-0.15	-5.08	-0.11

(Insert in Spacecraft Design Specification Book)

APPROVED:

System: M. R. Menard

Subsystem: Roy Otamura

JET PROPULSION LABORATORY

Spec. No. RL-4-150 B
10 May 1962

SUPERSEDES:
RL-4-150 A
15 March 1962

FUNCTIONAL SPECIFICATION
RANGER RA6 THROUGH 9 (P53, 54, 55, & 56) SPACECRAFT
CABLING

✻ Denotes Change

1.0 SCOPE

1.1 This specification covers cabling for the P53, 54, 55 & 56 spacecraft. The functional requirements are listed plus all other aspects necessary to the development of the functional requirements. It is required that the same methods and practices, employed on Rangers 3, 4, & 5, be used on P53 through 56.

2.0 APPLICABLE DOCUMENTS

✻ 2.1 The following documents apply to this specification:

DOCUMENTS

Jet Propulsion Laboratory

	Spacecraft Design Specification Book Ranger P53, 54, 55 & 56 (RA6 through RA9)
20014	General Specification, Soldering Process

20016	General Specification, Workmanship Requirements for Electronic Equipment
20018	General Specification, Cable and Harness Assemblies, Fabrication of
30201	Environmental Specification, Ranger Flight Equipment, Assembly Level Type Approval and Flight Acceptance Test Requirements

3.0 CABLING REQUIREMENTS

3.1 General

The spacecraft requires the routing of a great number of different signals. The cabling will accomplish the routing of the signals in a manner compatible with the requirements of the source unit and the destination unit. Consideration has to be given to the control of electromagnetic and electrostatic interference as well as to weight, power losses, and mechanical properties, such as IR drop in conductors, IR drop in grounds, insulation, protection from heat, dispersion of heat, tolerance for normal vibration, adequate support, accessibility during construction, accessibility during rework, accessibility for adjustment and test.

3.2 Electrical Requirements

3.2.1 Grounding

3.2.1.1 The structures, assemblies, chassis and other similar members will not be used as conductors for signal or power currents.

3.2.1.2 Signal, power and shield returns must be isolated from each other.

3.2.1.3 Signal and power returns must not be chassis grounded. Specific requirements necessitating this practice must be approved by the Spacecraft Project Engineer.

3.2.1.4 Shields will be grounded directly to the chassis at one end only.

3.2.1.5 All signal returns shall be routed to the communications (Case II) chassis ground.

3.2.1.6 The shield return for a particular signal wire shall be carried throughout the routing of the wire, i.e., past bulk-head connectors, etc.

3.2.1.7 Test equipment, instrumentation, and launch equipment shall not tie their chassis to the spacecraft power return, signal returns, or shield returns.

3.2.1.7.1 GSE and GSE cabling shall not be designed or utilized in such a manner as to cause malfunction or improper operation of the spacecraft during test. GSE ground loops must be eliminated.

3.2.1.8 To prevent the generation of ground loops and system interference it may be required to accept some degradation in spacecraft telemetry or ground instrumentation.

3.2.1.9 If the load is not connected to a supply voltage (such as in some servo loops), use shielded cable or twisted pair grounded at the source end.

3.2.1.10 RF circuit shields must be grounded at both ends with very short ground leads. In long cable runs it may be necessary to ground RF and video shields at intermediate points. If the shields are used for electrostatic reasons, it will be necessary to open the shield between ground points to prevent current flow in the shield.

3.2.1.11 Subsystems shall not directly intermix their signal returns. If direct signal return transfer is necessary, isolation must be provided. Otherwise, all signal returns must be routed to the communications transponder for chassis grounding. Power measurements that are routed to telemetry must isolate their grounds from the telemetry signal return.

3.2.2 Shielding

3.2.2.1 Shielding of sensitive circuit cables should be accomplished as a practical means of reducing the effects of stray fields. To be effective and practical, a shield must be electrically continuous and flexible.

3.2.2.2 When shields are used in sensitive circuits, care must be exercised to prevent stray currents induced in the shield from affecting the signal carrying wires. Shields must be connected so that one shield will not carry current from another shield. A pigtail is often connected between the junction of several shields and ground, and therefore, will carry many currents. This pigtail shall not be considered a shield.

3.2.2.3 Unfiltered ac or dc control leads between components should always use twisted shielded pairs if these components are susceptible to, or generate, RF interference. Normally, these shields should be grounded at both ends.

3.2.2.4 Continuous shields, used in circuits where shielding is required for radiations other than RF interference, must never be grounded at both ends. If multiple grounds are required for electrostatic reasons, the shield must be broken between ground points.

3.2.2.5 Under no circumstances shall shields be used as signal or power return paths.

3.2.3 Segregation

3.2.3.1 Conductors sensitive to audio interference should be categorized and grouped according to the limits of interference which can be tolerated. All of the conductors making up the circuit should be grouped together. Circuits should be additionally categorized to identify them as susceptible or generating as to the type of grounding mechanism employed.

3.2.3.2 Circuits sensitive to video and RF interference, although shielded, can be further aided by proper cable design. Classification of these circuits should be made on the basis of signal level and vulnerability of the shield.

3.2.3.3 Interference sources should be categorized according to:

a. Single wire AC circuit

b. Balanced AC circuit

c. Twisted balanced AC circuit

d. High harmonic circuit

e. AC field sources

f. Strong RF and pulse cables

g. Moderate RF and pulse cables

h. Transient

3.2.3.4 Wherever objectionable interference, noise or magnetic fields are expected, cancellation techniques such as intimate parallel wiring or twisting of wires will be implemented.

3.3 Physical Requirements

3.3.1 Mechanical Connections

3.3.1.1 No feed-through terminal boards will be mounted in the top or bottom of the hexagonal plenum. RF connectors are an exception.

3.3.1.2 Small, highly reliable items attached to the outer hex structure will preferably make connection at the item by use of solder terminals.

3.3.1.3 Large, complex, or frequently removed items will make connection by use of a connector.

3.3.1.4 Use of pigtails is generally incompatible.

3.3.1.5 If terminal boards are required by an item, the terminal board will be mounted on the item and bonded to it where possible.

3.3.1.6 Splices will be used to save weight and provide more connector pins. Splices shall be employed to accomplish the above in the best manner. However, splices will be confined to the semiflexible portions of the cabling.

3.3.2 The cabling will avoid: the adverse condition of the midcourse motor burning, disrupting the antenna pattern, and interfering with the sensors. Further, test cables will be routed in a manner to preclude damage to items such as sun sensors, etc.

3.3.3 Various heating effects will be considered in the design of the cables such as heating by the sun or cooling by being in a shadow, current flow heating in a vacuum and in the atmosphere, and temperature control that will have to be provided.

3.3.4 To ensure reliability, 22-gauge wire will be the smallest wire used.

3.3.5 To control magnetic fields and to conserve weight, a number of related circuits may use the same return.

3.3.6 To provide for growth in general, 10 percent empty pins will be provided in the connectors at the time the wiring diagram is released. The same pins are to be provided on the outside. No spare wires will be provided, however, except in those areas that may be specified.

3.3.7 No special effort will be instituted to reduce dc magnetic fields. If a choice of otherwise similar methods is available, however, the method which reduces the field will be used.

3.4 Fabrication Requirements

3.4.1 Connectors shall be shared by several subsystems if they are within reasonable proximity to each other and the subsystems do not overflow the connector. If several subsystems each have a small number of wires, they will share the connector.

3.4.2 Some functional requirements can only be met by proper fabrication, therefore the specifications listed under paragraph 2.1 shall be closely adhered to.

3.4.3 Shielded and twisted wires will have the pins in close proximity to each other.

3.4.4 Wires will be grouped in a connector by categorizing.

3.5 Environmental Requirements

3.5.1 The cabling will be designed to withstand the environment it will encounter on the earth as well as that of space. It will satisfy the environmental conditions called out in Specification 30201 as referred to in paragraph 2.1.
Flight spare case harnesses are also subject to this requirement.

3.5.2 The cable must withstand the manipulations attendant to installation and removal. Every reasonable precaution is to be exercised during installation to prevent damage to the cable.

3.5.3 Normal manipulations of the cables shall be such as not to create a need for jacketing.

3.5.4 Various parts of a single cable may be considered separately, i.e., flexible, semi-flexible, etc.

3.5.5 All cable assemblies must be capable of withstanding internal sterilization temperatures of 125°C for 24 hours and a 13 hour soak in ethylene oxide-freon gas mixture used for external terminal sterilization. Cables that are wrapped with thermal control tape must be wrapped before heat sterilization. Cables that are assembled directly to the bus or midcourse motor will be heat sterilized with these units. Spare cables will have to be separately heat sterilized.

3.6 Quality Control Requirements

3.6.1 Absolute accuracy is the goal. Cabling will be tested against documents approved by the cognizant cabling engineer and the appropriate subsystem engineer. Continuity, insulation, and additionally designated electrical parameters shall be tested 100 percent against pin assignments to documents provided independently to Quality Control.

3.6.2 No cable shall be used until it has been accepted by Quality Control.

3.6.3 All portions of cables required to move in normal use shall be a flexible type. This includes the portions that must be moved to be connected. Complete physical inspection is necessary, as flight spacecraft will not be compositely vibration tested.

4. DOCUMENTATION

4.1 Nomenclature

4.1.1 All designations for cables, harnesses, plugs, etc., shall originate with the Spacecraft Project Engineer.

4.2 Details

4.2.1 All elements listed under electrical and physical requirements shall be explicit, such as orientation of connector guides.

4.2.2 Physical and electrical preliminary documents will reflect best current estimates.

4.2.3 Timeliness will be achieved through schedule check dates for the following events:

a. Establishment of physical packages

b. Establishment of physical packages locations

c. Block diagrams which recognize and designate connectors

d. Wiring diagram release

4.2.4 Layout, name, and wiring information will be periodically prereleased to meet the needs of:

a. System test

b. Cognizant engineers

c. Field operations

d. Fabricators

e. Integration

4.2.5 Reproducible documents will be released coincident with completion of the cable assembly for each individual spacecraft.

(Insert in Spacecraft Design Specification Book)

APPROVED:
System: M. R. Munnard
Subsystem: W. J. Lane

JET PROPULSION LABORATORY

Spec. No RL-4-170
17 January 1962

FUNCTIONAL SPECIFICATION

RANGER RA-6 THROUGH RA-9 SPACECRAFT VEHICLE INTEGRATION

1.0 SCOPE

The functional requirements for the integration of the Ranger A-6 through A-9 spacecraft with the Atlas-Agena system are covered in JPL Specification No. 30947, Detail Specification, Ranger Follow-On Spacecraft, Vehicle System Integration, Requirements and Restraints.

(P) 16,073

(Insert in Spacecraft Design Specification Book)

APPROVED:

System: M. R. Mennard

Subsystem: D H Knott

JET PROPULSION LABORATORY

Spec. No. RL-4-180
15 October 1962

FUNCTIONAL SPECIFICATION
RANGER 6 THROUGH 9 SPACECRAFT
FLIGHT EQUIPMENT
TELEVISION SUBSYSTEM

1.0 SCOPE

1.1 This specification shall serve to define the functional performance of the TV Subsystem of the Ranger 6 through 9 spacecraft. This subsystem primarily consists of that equipment carried on the spacecraft for the purpose of obtaining high resolution lunar video pictures.

2.0 APPLICABLE DOCUMENTS

2.1 The following documents form a part of this specification:

SPECIFICATIONS

Jet Propulsion Laboratory

	Spacecraft Design Specification Book, Ranger 6 through 9
30880	Design Specification, Ranger TV Subsystem

DRAWINGS

Jet Propulsion Laboratory

J 315 1940	Interface, Ranger Spacecraft and RCA TV Subsystem

3.0 REQUIREMENTS

3.1 General

The Ranger TV Subsystem shall provide equipment necessary for the terminal video phase of the Ranger TV mission. The Ranger TV mission (RA6, 7, 8, 9) is to obtain high resolution video pictures of a selected portion of the lunar surface. The TV Subsystem shall, as a part of an impacting vehicle, view the lunar surface through one-inch vidicons, and translate the lunar scene into video which shall be transmitted to Earth, along with telemetry data to indicate spacecraft operation. The TV Subsystem remains structurally attached to the Ranger Spacecraft throughout the entire mission; however, it is electrically complete and independent with the exception of instructions via the spacecraft command receiver or Central Computer & Sequencer (CC&S), stabilization, and the use of the high-gain antenna. The spacecraft/TV subsystem configuration is shown in Figure 3.1-1 (with thermal shroud) and 3.1-2 (without thermal shroud). The components of the subsystem and locations are shown in Figures 3.1-3 and 3.1-4.

3.2 Weight

The weight of the assemblies and the total weight of the subsystem shall not exceed that specified in the Design Parameters and Reference Designation Functional Specification, RL-4-120.

3.3 Service Conditions

3.3.1 TV Subsystem

The TV Subsystem shall be capable of satisfactory operation when subjected to the environments specified in the Design Characteristics (RL-3-110) and Design Restraints (RL-3-120) Functional Specifications.

3.4 Performance

3.4.1 Over-all Performance Characteristics

The Ranger TV Subsystem shall be required to operate in three different modes, cruise, terminal, and emergency. It shall supply channel 8 (IRIG) telemetry to the spacecraft telemetry system during cruise mode, composite video and 225 kc telemetry to the spacecraft high-gain antenna during terminal mode, or PAM telemetry to high-gain antenna during emergency mode, if required. The transmission frequency allocation for the entire mission are shown in Figure 3.4.1-1. The components of the flight equipment of the Ranger TV Subsystem are listed in RL-4-120.

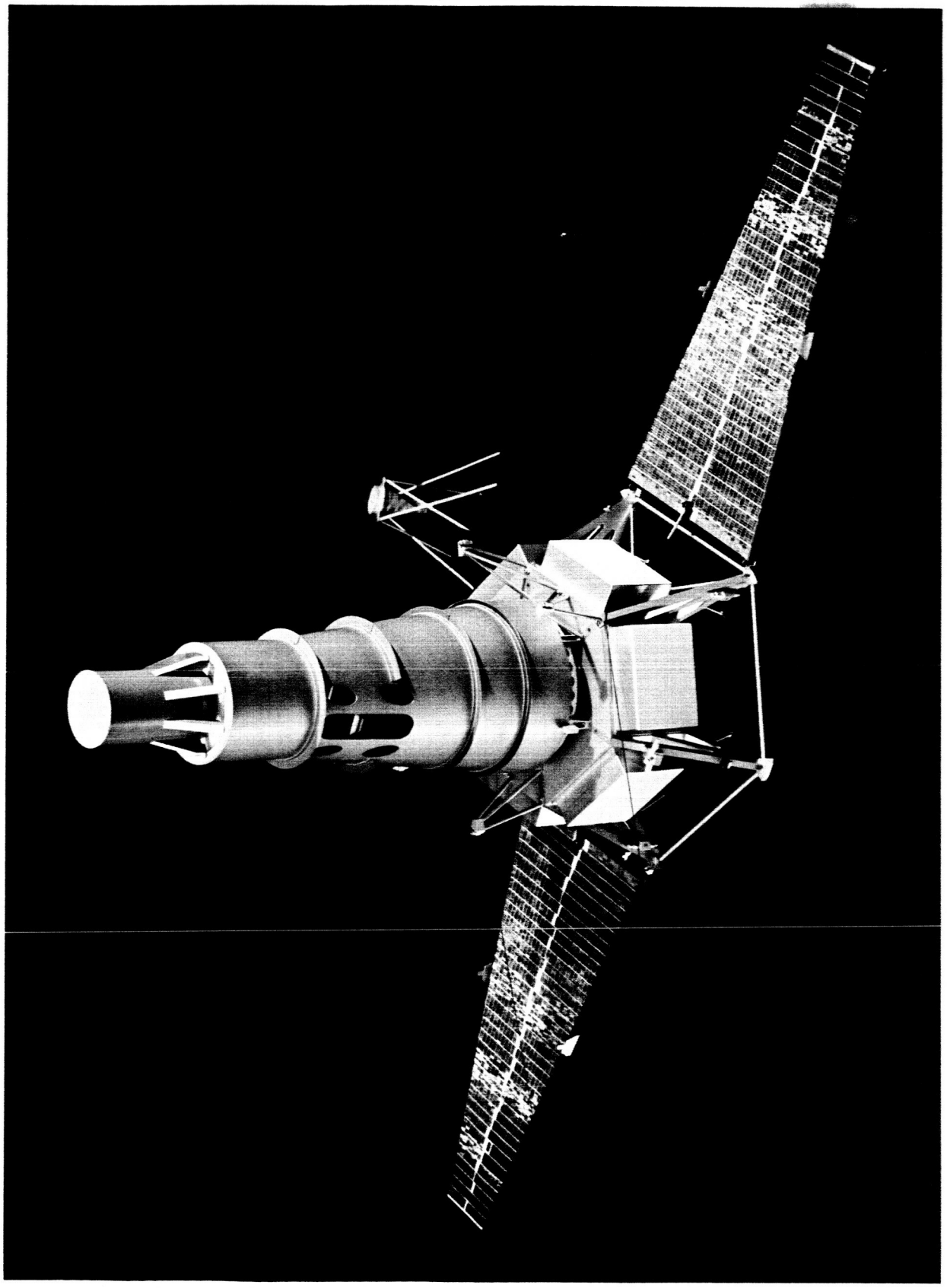

Figure 3.1-1. Spacecraft/TV Subsystem Configuration (with thermal shroud)

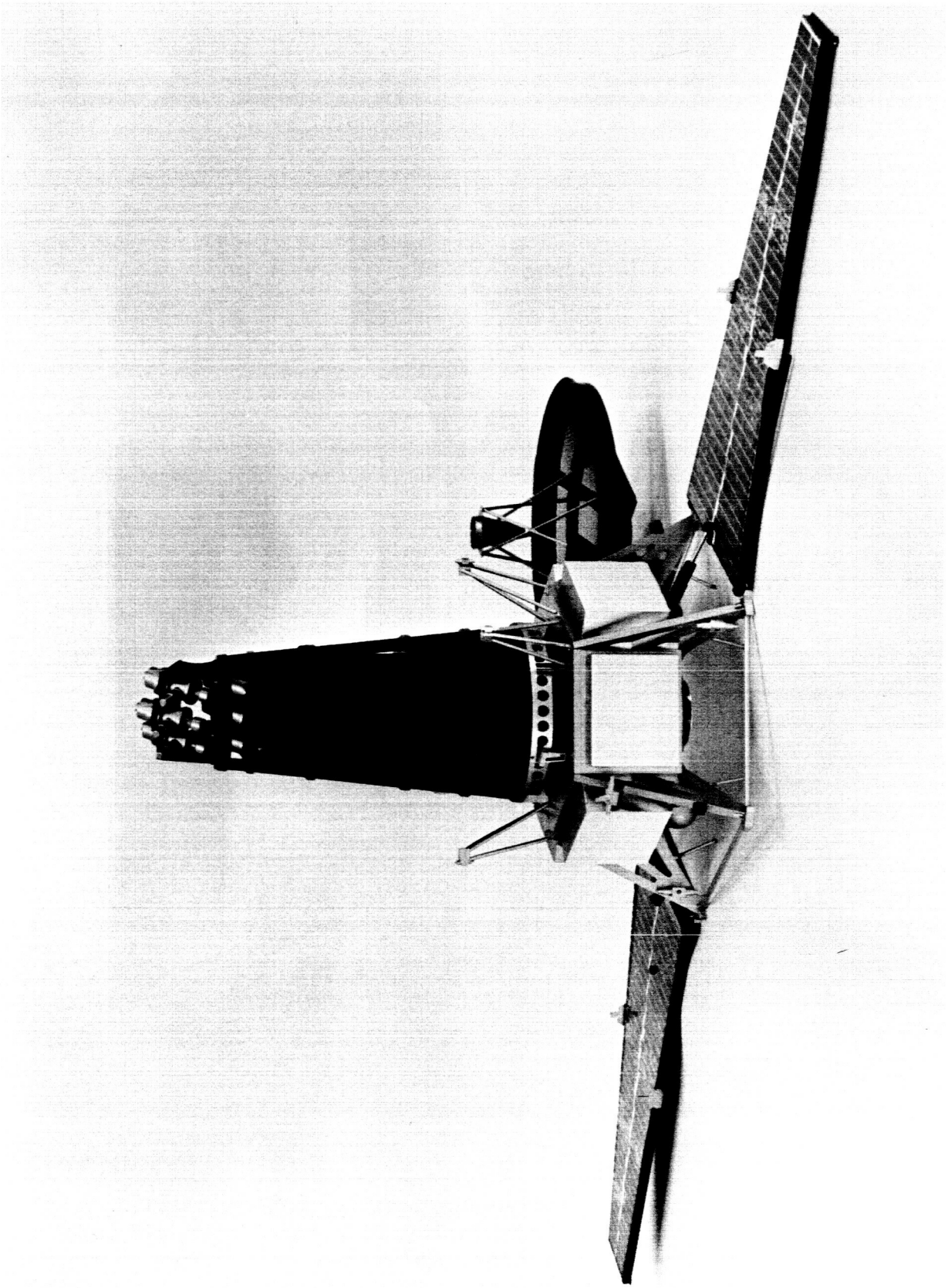

Figure 3.1-2. Spacecraft/TV Subsystem Configuration (without thermal shroud)

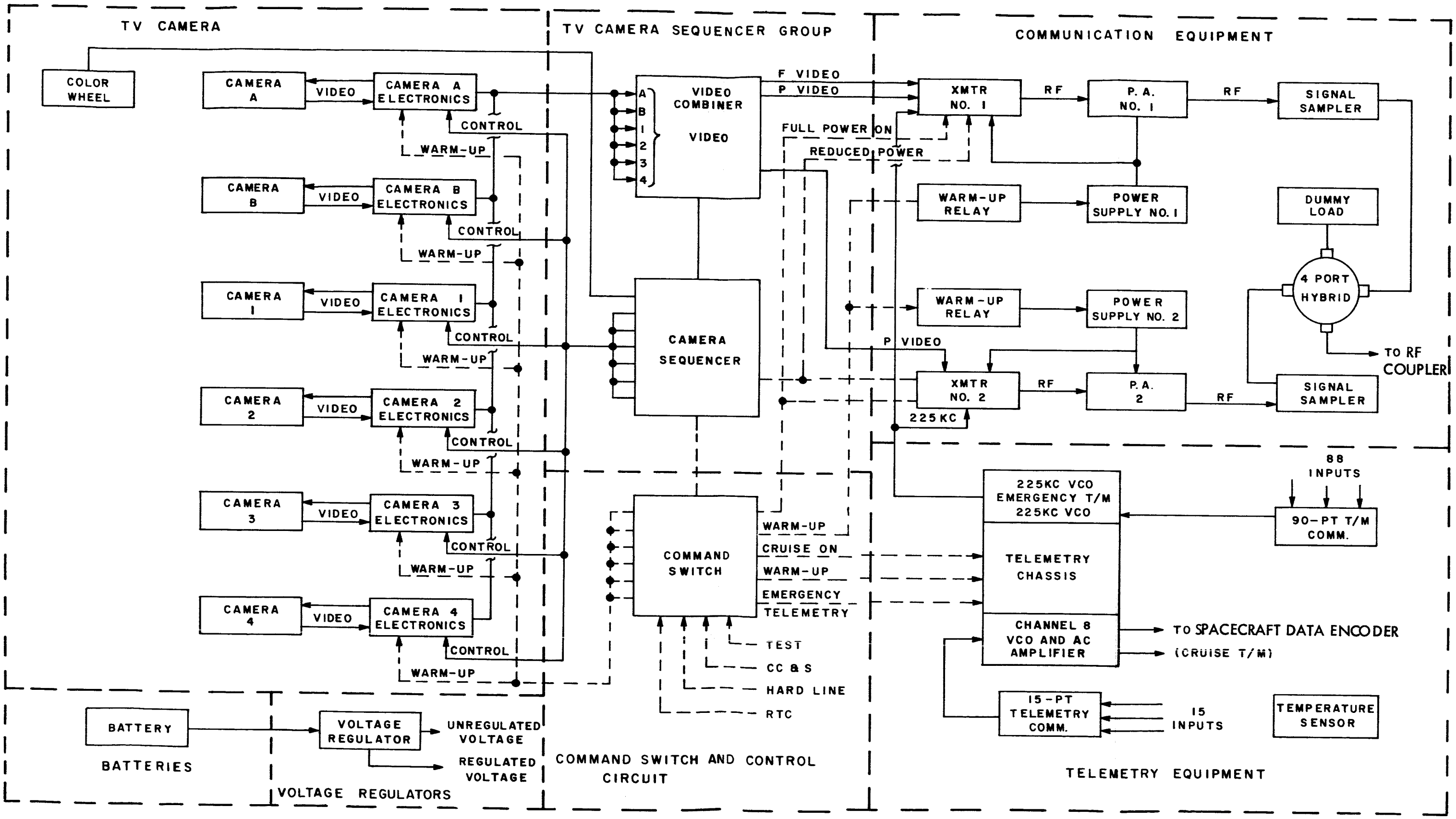

Figure 3.1-3. Ranger TV Subsystem Block Diagram

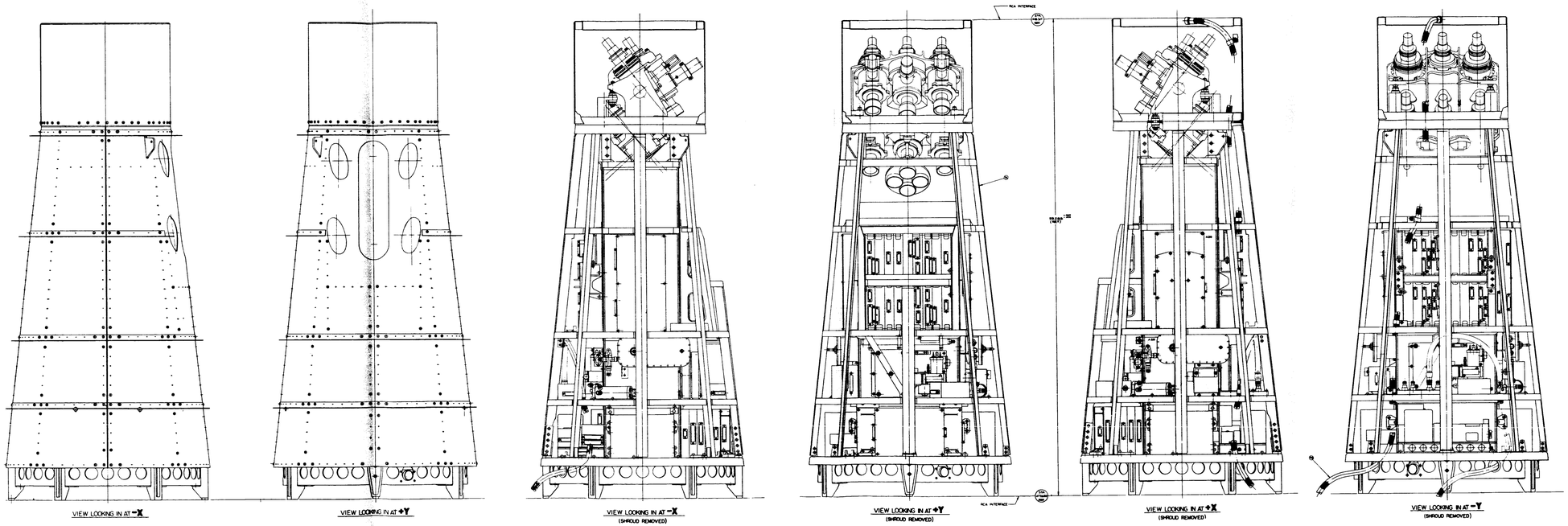

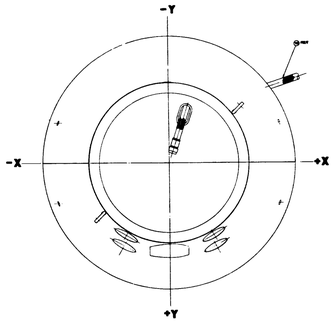

PLAN VIEW
(AXES ORIENTATION)

Figure 3.1-4. Ranger TV Spaceframe

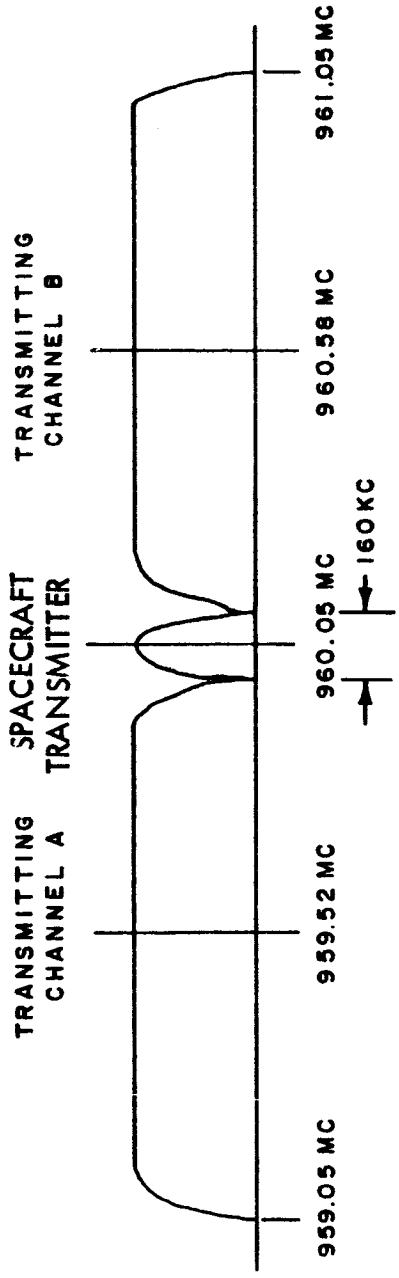

Figure 3.4.1-1. Ranger TV Subsystem Frequency Allocations

3.4.1.1 Cruise Mode

Cruise mode operation shall furnish data from the 15-point commutator of the telemetry assembly to the spacecraft data encoder for transmission to earth. It shall normally be activated 16.1 hours after launch by a command stored in the Central Computer and Sequencer (CC&S). If the CC&S should fail to activate the cruise mode telemetry, the equipment will be turned on by warmup command from earth, the first real time command (RTC-7). The warmup command is given in the terminal mode, 15 minutes before impact.

3.4.1.2 Terminal Mode

Terminal mode operation shall furnish a dual channel, FM signal in the 960 Mc band. Each channel shall contain composite video and 225 kc telemetry data from the TV Subsystem communication and telemetry assemblies, respectively. The Terminal Mode shall be activated approximately 15 minutes before impact with a CC&S command (Warmup). The CC&S command is backed up by a RTC-7 command. After a 5 minute warmup, the system goes to full power and transmits the dual channel signals to earth. The switch to full power is commanded by an internal sequencer with a CC&S backup.

Terminal mode shall furnish TV pictures of the lunar surface. The pictures shall vary in resolution as a function of altitude, and shall culminate in a resolution between 0.2 meters and 0.5 meters per optical line pair from the last transmittable picture before impact. At 2 minutes before impact the high resolution video is switched onto both channels for redundant transmission to earth.

3.4.1.3 Emergency Mode

Emergency mode operation shall furnish narrow band telemetry in the event that terminal mode video cannot be received. It shall be activated, if required, by a second RTC-7 (Emergency ON), applied via the spacecraft command subsystem. If the failure of normal operation is corrected, emergency mode can be inhibited and normal operation re-established by a third RTC-7 (Emergency Off).

3.4.2 Individual Equipment Performance Characteristics

3.4.2.1 TV Cameras

The TV cameras of the Ranger TV Subsystem are comprised of two wide-angle and four narrow-angle cammeras to obtain television pictures of the lunar surface prior to impact. The wide-angle cameras are full-scan, or F type; they will operate alternately during the first 8 minutes of the 10-minute terminal mode. The narrow-angle cameras are partial-scan, or P type; they will operate in sequence throughout the terminal mode. The fields of view of

F-type cameras A and B shall contain the fields of view of the P-type cameras as shown in Figure 3.4.2-1. P-type cameras 1, 2, 3, and 4 shall be arranged to satisfy the requirements for picture nesting, with the overlap of the fields of view centered on the spacecraft velocity vector. Each camera shall consist of a camera assembly and a camera electronics assembly. Each camera shall have a high-quality optical lens and a slit-type shutter to control exposure of its 1-inch vidicon. Additionally, camera A shall have a color filter wheel for obtaining color images of the lunar surface. Sync and control signals for the cameras shall be provided by the control programmer and camera sequencer assembly, and the amplified video output from each camera shall be fed to a video combiner assembly for transmission. The F-type camera outputs will be used to modulate the channel A transmitter (No. 1) during their 8-minute operation. The P-type camera outputs will be used to modulate the channel B transmitter (No. 2) throughout the 10-minute terminal mode. Thirteen minutes after the warmup command the P-type camera outputs are simultaneously switched to the channel A transmitter for redundant picture transmission. See Table I for camera characteristics. Figure 3.4.2-2 shows a block diagram of the camera system.

Table I. Summary of Camera Characteristics

Characteristic	Cameras A and B	Cameras 1, 2, 3, and 4
Aspect Ratio	1 to 1	1 to 1
Active Scan Area	0.44 x 0.44 in.	0.11 x 0.11 in.
Line Rate	450 cps	1500 cps
Horizontal Line Time	2.22 millisec	666.6 microsec
Horizontal Blanking	0.22 millisec	111.1 microsec
Frame Rate	0.39	5 cps
Frame Time	2.56 sec	0.2 sec
Vertical Blanking	46.6 millisec	6.6 millisec
Group Vertical Blanking	-	40 millisec
Video Bandwidth	200 kc	200 kc
Optics	75 mm/F2	75 mm/F2
Shutter Speed	5 milliseconds	4 milliseconds

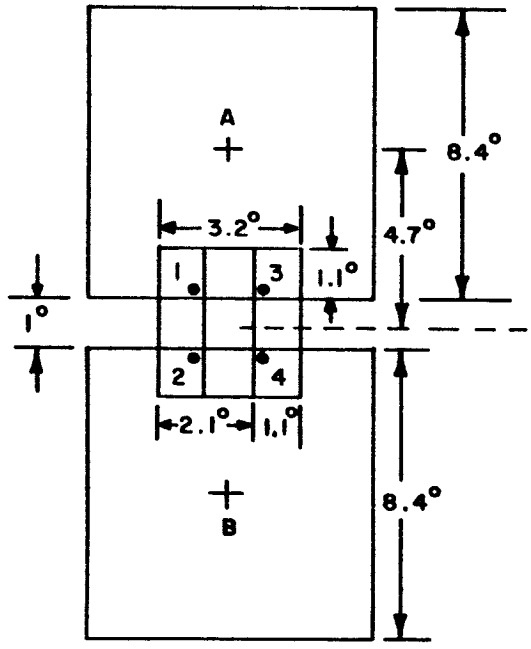

Figure 3.4.2-1. TV Camera Scan Areas

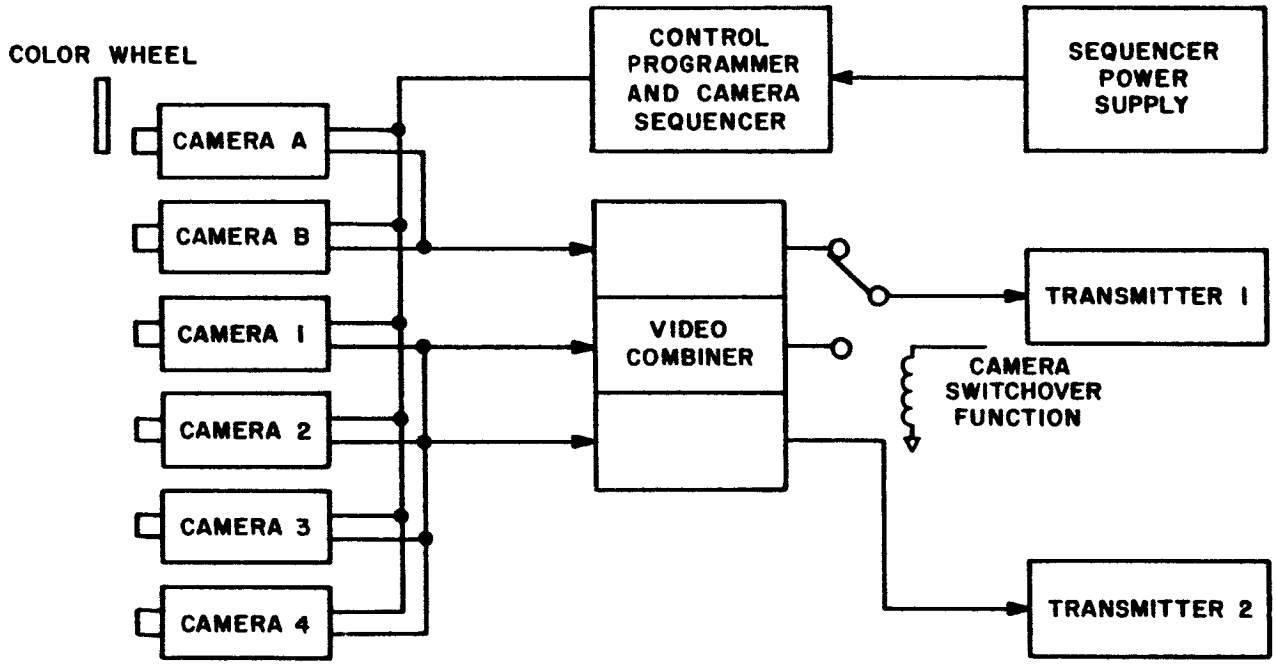

Figure 3.4.2-2. Block Diagram of TV Camera System Integration

3.4.2.2 TV Camera Sequencer Group

The TV Camera Sequencer Group of the Ranger TV Subsystem consists of a video combiner, control programmer and camera sequencer, and sequencer power supply. The group shall generate synchronizing signals for the full and partial scan cameras, control switchover from the full to the partial scan cameras, and control color filter wheel positioning for full scan camera A. It shall combine the camera video with sync and tone code signals, and apply the signals to the RF transmitter as composite video. The tone code signals shall identify the camera and type of color filter in use in accordance with Table II. Figure 3.4.2-3 shows a functional block diagram of the camera sequencer group.

Table II. Tone Frequencies and Codes

Description	Tone Code
Red Filter	A - 144 kc
Green Filter	B - 162 kc
Blue Filter	C - 180 kc
Neutral Filter	B + C
Camera B Frame	A + C
Fast Frame Group	A + B
Camera A-B to Camera 1-2-3-4 Video	A + B

3.4.2.3 Batteries

The Batteries of the Ranger TV Subsystem shall provide all necessary electrical power to operate the subsystem during the prelaunch checkout and ensuing lunar mission. The TV Subsystem shall employ two parallel wired batteries, each battery being capable of providing the total power requirement for the mission.* Each battery shall consist of 22 series-connected, silver-zinc oxide cells, a temperature transducer, and a thermostatically controlled heater. An external switch shall be provided to control power to the heater

* On Ranger 9 only, a single battery will be employed.

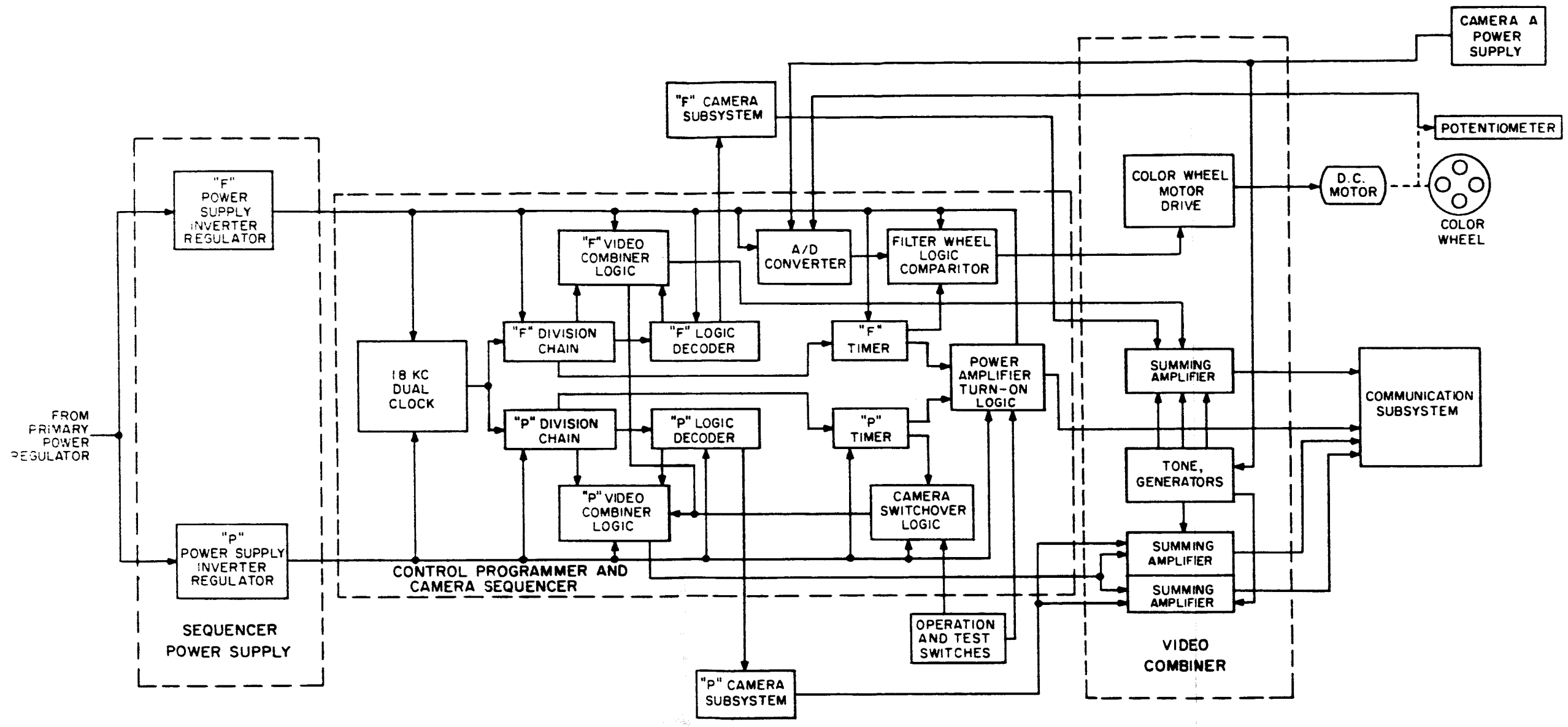

Figure 3.4.2-3. TV Camera Sequencer Group Functional Block Diagram

and thermostat. A connector provides facilities for monitoring the individual cell voltages, temperature transducer output, and for applying power to the heater circuit. The heater thermostat shall maintain the battery temperature within 72 ±4°F and 81 ±5°F throughout the planned mission. Each battery shall provide a minimum nominal capacity of 1600 watt-hours and a time-discharge profile sufficient for the requirements of the mission as shown in Tables III and IV.

Table III. Discharge Time Profile (Simulated Mission)

Discharge Current (amps)	Discharge Time	Minimum Terminal Voltage (vdc)
17.60 ±0.05	5 minutes	-30.45
0.140 ±0.02	50 hours	-30.45
17.20 ±0.05	5 minutes	-30.45
28.30 ±0.05	10 minutes	-30.45

Table IV. Storage Characteristics

Storage Temperature (°F)	Storage Time (Months)	Capacity Loss (% per Month)
30	4	0.1
60	4	0.3
90	3	6.6
120	2	27.0

3.4.2.4 Voltage Regulators

The Voltage Regulators of the Ranger TV Subsystem are designed to assure the specified regulated primary power is applied to the TV Subsystem equipment as the batteries are discharged through use, or in the event that a single battery should fail. Two types of regulators are required, one for high current and one for low current. The high-current voltage regulator shall be capable of maintaining an output voltage of 27.50 ±0.50 vdc for input voltage variations from 30.5 to 36 vdc and output current variations from 0.5 to 5.6 amperes. This power shall be made available to the communications system, the control programmer and camera sequencer, cameras, and associated electronics equipment. The high-current voltage regulator shall also provide connections for the unregulated power requirements, 30 amperes of current at 0.75 to 1.25 volts less than the applied battery voltage. The unregulated power shall be made available to the communication equipment and camera shutters. It shall utilize two silicon-controlled rectifiers to assure that one shorted battery will not discharge the other. The low-current voltage regulator shall be capable of maintaining an output voltage of 27.50 ±0.50 vdc for input voltage variations from 30.5 to 42.0 vdc and output current variations from 0.140 to 0.360 amperes. This power shall be made available to the telemetry equipment. The low-current voltage regulator shall provide 1 ampere of current at 0.75 to 1.25 volts less than the applied battery voltage. This power shall be made available to the command switch. The low current regulator shall use silicon diodes to assure that one shorted battery will not discharge the other.

3.4.2.5 Telemetry Equipment

The Telemetry Equipment of the Ranger TV Subsystem shall consist of cruise and terminal mode telemetry elements. A block diagram of the telemetry equipment is shown in Figure 3.4.2.5-1.

3.4.2.5.1 Cruise Mode

Cruise mode telemetry shall be activated by a prestored command from the Central Computer & Sequencer (CC&S) which connects the TV Subsystem batteries to the low-current regulator. During the cruise mode, a 15-point sampling switch operating at a rate of one point-per-second shall be used to sample the critical temperatures and voltages shown in Table V. The output of this switch shall be used to drive a channel 8 IRIG subcarrier oscillator. An ac amplifier and transformer shall be used to connect the oscillator output across the spacecraft interface where it shall be mixed with other telemetry signals for transmission by the spacecraft telemetry system.

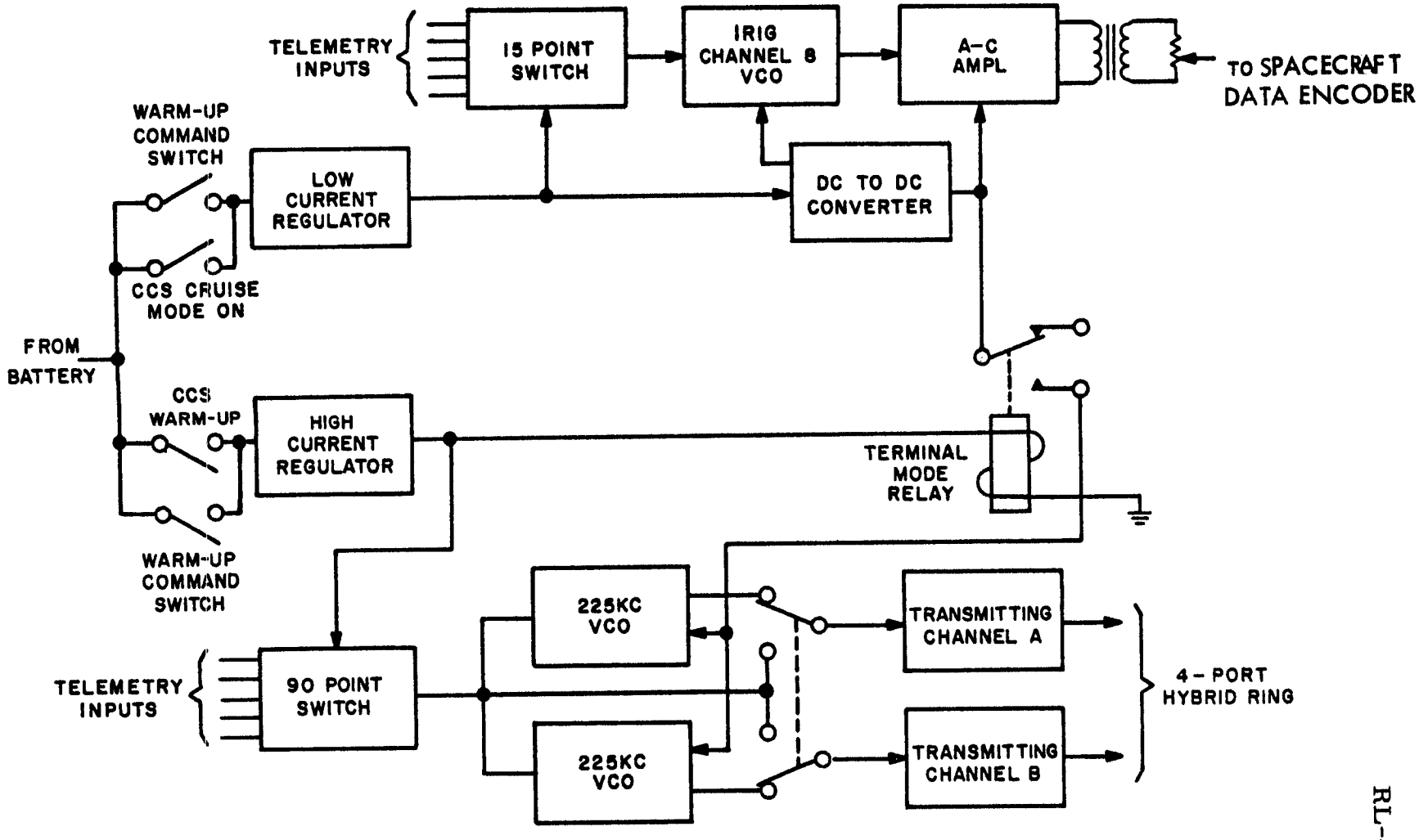

Figure 3.4.2.5-1. Telemetry Equipment Block Diagram

Table V. 15-Point Telemetry Data

Commutator Position	Function
1	Unreg DC (Cruise)
2	-27.5 VDC (Cruise)
3	Batt A Int. Temp. No. 8
4	Batt B Int. Temp. No. 10
5	Batt A Voltage
6	Batt B Voltage
7	Structure Temp. No. 9
8	Structure Temp. No. 11
9	Xmtr A Pwr. Output
10	Xmtr B Pwr. Output
11	Partial Full Timer
12	C. Full Scale Ref.
13	C. Zero Ref.
14	Not used
15	Not used

3.4.2.5.2 Terminal Mode

Terminal mode telemetry shall be activated 5 minutes before TV subsystem full power activation (15 minutes before impact) by a warmup command from the ground station (RTC-7) or a warmup command from CC&S. A 90-point sampling switch operating at a rate of 3 points-per-second shall sample subsystem parameters to provide the detailed diagnostic telemetry shown in Table VI. The output of this switch shall drive two 225-kc voltage-controlled oscillators connected in parallel. The output from one oscillator shall be summed with the video at the input of transmitting channel 1 (channel A); the output of the other oscillator shall be summed with the video at the input of transmitting channel 2 (channel B). At ten minutes before impact, full power operation shall be activated by a command which shall energize the power amplifiers in both transmitters, transmitting the data to Earth via the spacecraft high-gain antenna.

3.4.2.5.3 Emergency Mode

An emergency mode shall be provided to permit the ground station to receive the terminal mode telemetry in the event a system malfunction prevents normal reception. This mode shall be activated by a second RTC-7 from Earth. In this mode, the video and 225-kilocycle telemetry signals are switched out and the 90-point terminal mode telemetry signals are used to pulse-amplitude modulate (PAM) the transmitters directly.

3.4.2.6 Communication Equipment

3.4.2.6.1 General

The Communication Equipment of the Ranger TV Subsystem shall consist of two similar transmitting channels and an RF combining section. Each channel shall consist of an L-band FM transmitter, intermediate power amplifier, 60-watt power amplifier, signal sampler, telemetry processor, and transmitter power supply. A 4-port hybrid ring, in the RF section shall be used to mix the output of the two transmitting channels, the combined output being fed to the spacecraft RF coupler. A dummy load shall be included in the RF equipment to dissipate the combining loss. Each transmitter shall contain a modulator, two frequency multipliers, and an intermediate power amplifier. The transmitters shall operate within the frequency bands specified in Figure 3.4.1-1. Each transmitter shall operate within a bandwidth of approximately 900 kc with the output of the channel A and channel B transmitters centered at 959.52 and 960.58 mc, respectively. A 160 kc band between the transmitter output frequencies is reserved for the spacecraft transponder transmitter. An over-all block diagram of the communications equipment is shown in Figure 3.4.2.6-1.

Table VI. 90-Point Telemetry Data

Commutator Position	Function
1	Vert. Sweep
2	Horiz. Sweep
3	Grid 1 and Focus Current
4	+1000 and +300 VDC
5	Shutter and Lamp
6	Vidicon and Nuvistor Filament Current
7	Not Used
8	Vert. Sweep
9	Horiz. Sweep
10	Grid 1 and Focus Current
11	+1000 and +300 VDC
12	Shutter and Lamp
13	Vidicon and Nuvistor Filament Current
14	Not Used
15	Vert. Sweep
16	Horiz. Sweep
17	Grid 1 and Focus Current
18	+1000 and +300 VDC
19	Shutter and Lamp
20	Vidicon and Nuvistor Filament Current
21	Not Used
22	Vert. Sweep
23	Horiz. Sweep
24	Grid 1 and Focus Current
25	+1000 and +300 VDC
26	Shutter and Lamp
27	Vidicon and Nuvistor Filament Current

Table VI. 90-Point Telemetry Data (Cont'd)

Commutator Position	Function
28	Not Used
29	Vert. Sweep
30	Horiz. Sweep
31	Grid 1 and Focus Current
32	+1000 and +300 VDC
33	Shutter and Lamp
34	Vidicon and Nuvistor Filament Current
35	Not Used
36	Vert. Sweep
37	Horiz. Sweep
38	Grid 1 and Focus Current
39	+1000 and +300 VDC
40	Shutter and Lamp
41	Vidicon and Nuvistor Filament Current
42	Not Used
43	Elec. Box Temp. No. 2
44	Batt A Case Temp. No. 4
45	Batt B Case Temp. No. 5
46	Not Used
47	Not Used
48	-Unreg DC
49	-27.5 VDC
50	Structure Temp. No. 12
51	Structure Temp. No. 13
52	Structure Temp. No. 14
53	Structure Temp. No. 15
54	SCR No. 1 Gate
55	SCR No. 2 Gate
56	Unreg DC On

Table VI. 90-Point Telemetry Data (Cont'd)

Commutator Position	Function
57	Sw Pos. Zero
58	Sw Pos. Warmup
59	Sw Pos. Emerg.
60	Sw Pos. Emerg. Off
61	FTFF No. 2
62	Not Used
63	Osc A
64	+12 VDC Partial
65	-12 VDC Partial
66	Osc B
67	+12 VDC Full
68	-12 VDC Full
69	FTFF No. 1
70	PRFF No. 1
71	PRFF No. 2
72	P1 Video Output
73	P2 Video Output
74	Full Video Output
75	Pwr. Ampl. No. 1 Heat Sink Temp. No. 6
76	A RF Pwr. #1
77	1000 VDC To Comm. A
78	Xmtr A Output
79	Pwr. Ampl. Cath. Current to Comm.
80	Transmitter Heat Sink
81	B RF Pwr. #2
82	1000 VDC To Comm. B
83	Xmtr B Output #1
84	Pwr. Ampl. Cath. Current to Comm.

Table VI. 90-Point Telemetry Data (Cont'd)

Commutator Position	Function
85	Camera Housing Temp. No. 1
86	Camera Electronics Temp. No. 2
87	Full Scale Ref.
88	Zero Ref.
89	Not Used
90	Not Used

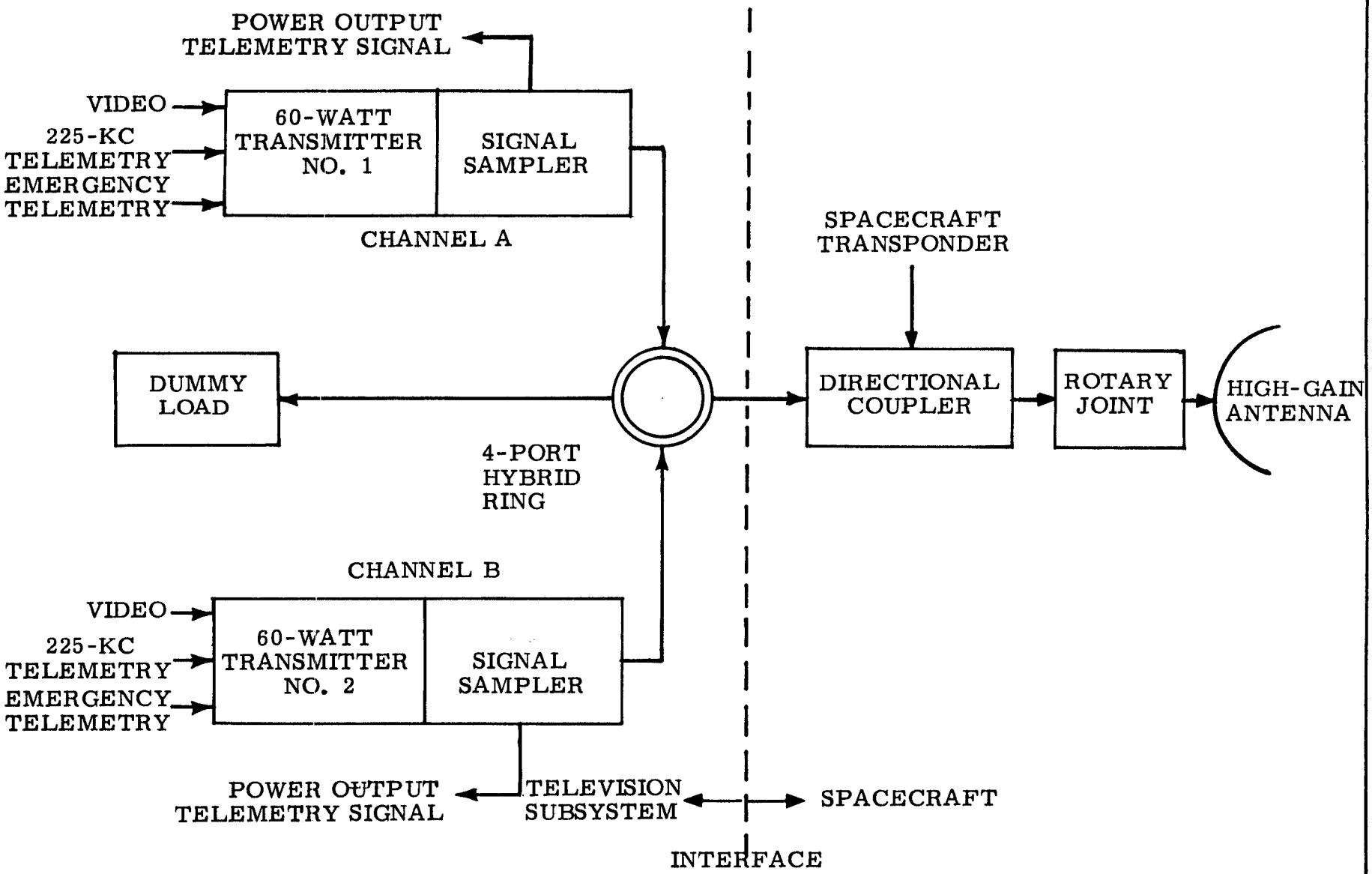

Figure 3.4.2.6-1. TV Subsystem/Spacecraft Communication Equipment, Over-all Block Diagram

3.4.2.6.2 System Operation

During the planned mission, the warmup signal, a real time command from the ground station or a preprogrammed signal from CC&S, occurs 15 minutes before the Ranger spacecraft impacts on the surface of the moon. This signal applies the battery output to the high current regulators. The 27.5 vold dc output from the high current regulator and the unregulated battery output is supplied to the communication equipment to start equipment warmup. At 10 minutes before impact, a signal from the spacecraft CC&S, or the TV Subsystem camera sequencer causes relays in the transmitter power supplies to apply high voltage to the intermediate and 60-watt power amplifiers. The power amplifier outputs from the two transmitters are mixed in a 4-port hybrid ring, the output of which is processed through the spacecraft recoupler and fed to the high-gain antenna for transmission to Earth. During the first 8 minutes of the terminal mode, channel A is modulated by the 225 kc telemetry signals from the telemetry equipment and the video from the A and B cameras. During the last two minutes of the mission, the video from the A and B cameras is not used, and the video from cameras 1 through 4 and the 225-kc telemetry signals are used to modulate the transmitter. Channel B is modulated by the video from cameras 1 through 4 and the 225 kc telemetry signal until impact. The outputs from the video combiners will be such that a pre-emphasized video signal of 0 to -1 volt dc will be supplied at the junction of the summing resistors R1 and R2 in the modulator. The maximum signal voltage will correspond to a highlight brightness of 1250 foot lamberts. In the event that a malfunction in the spacecraft prevents the ground station from receiving the video signals, a real time command from the ground station may be used to advance the command switch one position and put the system into the emergency mode. In the emergency mode, the video and 225 kc telemetry inputs to the transmitters are switched out and terminal mode PAM telemetry data is transmitted over the high-gain antenna using both transmitters operating on full power. If the malfunction is corrected after the emergency mode has been activated, a real time command from the ground station may operate the command switch to place the subsystem back into normal operation. A transmitting channel block diagram is shown in Figure 3.4.2.6-2. Thermal considerations of the transmitters is shown in Figure 3.4.2.6-3.

3.4.2.6.3 Power Output

Each transmitter power supply, during operate, shall have the following output characteristics with -29.5 volts dc at the input:

a. +1000 volts dc ±5 percent, at 130 milliamperes

b. -750 volts dc ±5 percent, at 70 milliamperes

c. +250 volts dc ±5 percent, at 20 milliamperes

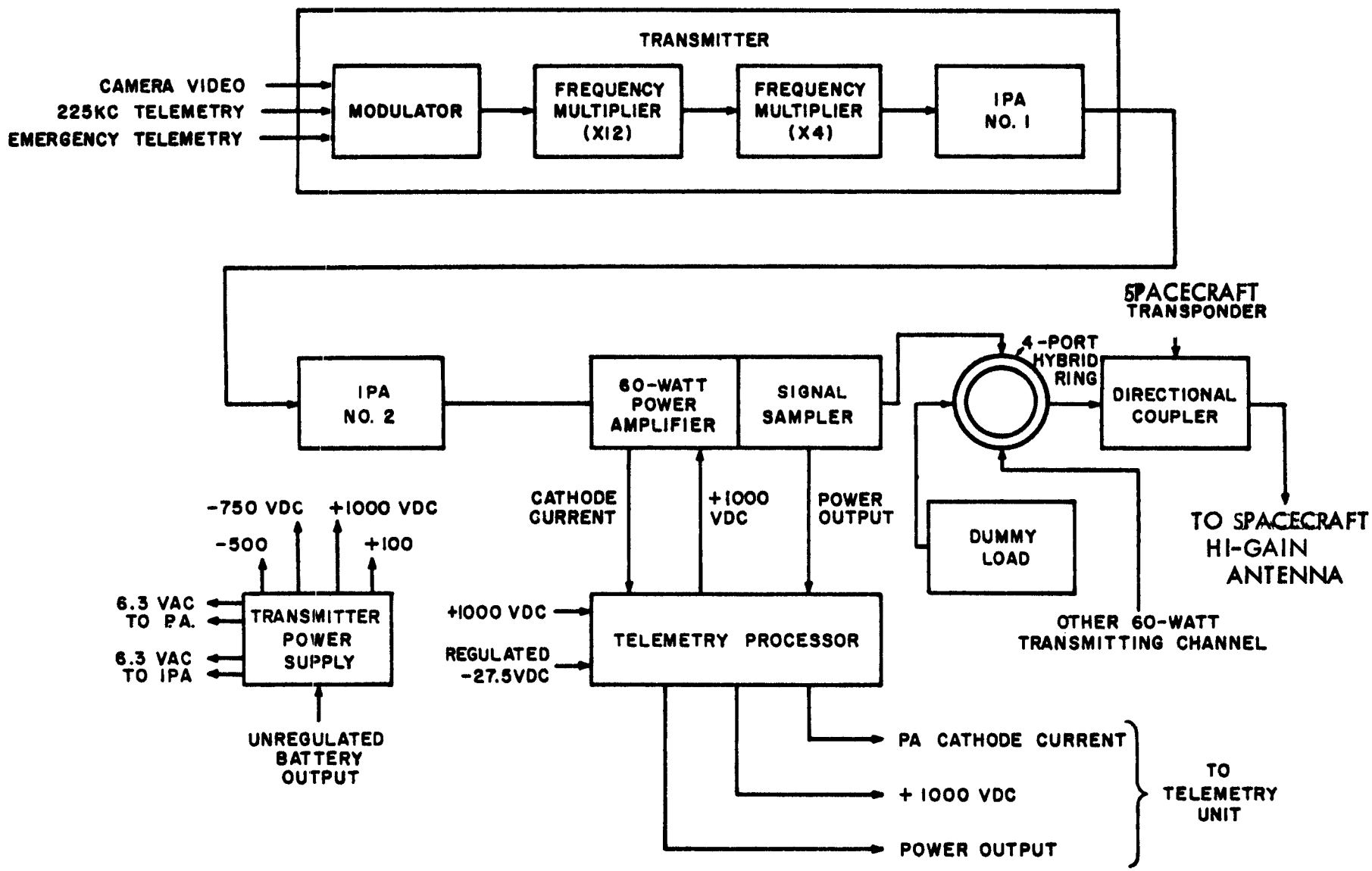

Figure 3.4.2.6-2. Transmitting Channel, Block Diagram

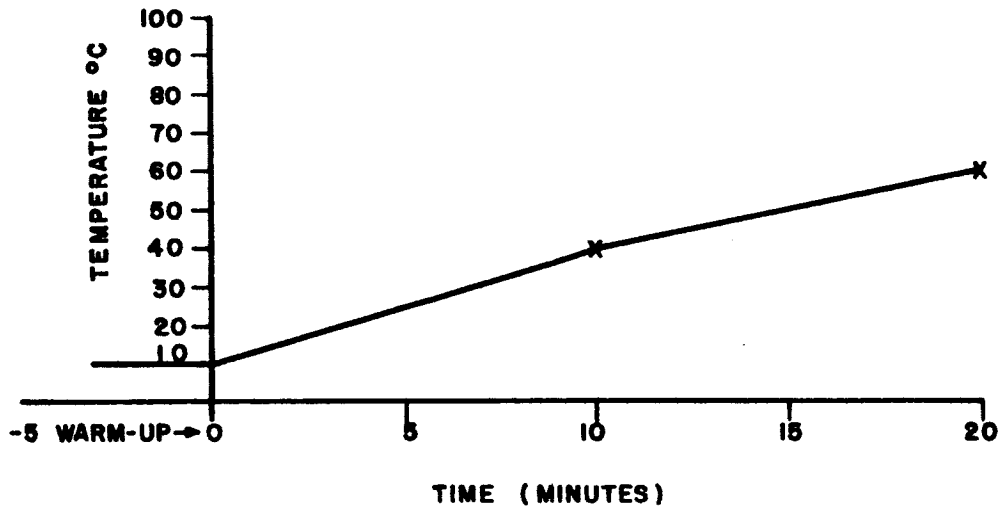

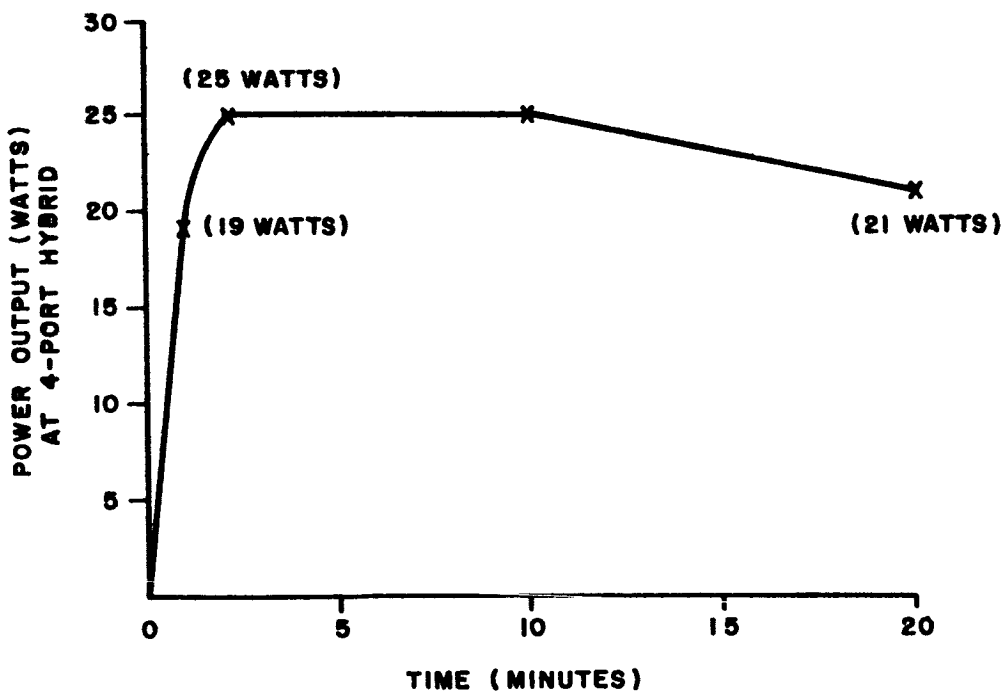

Figure 3.4.2.6-3. Heat Sink Temperature and Power Output vs. Time

d. +100 volts dc ±5 percent, at 300 milliamperes

e. 6.1 volts ac ±5 percent, at 1 ampere

f. 6.1 volts ac ±5 percent, at 1 ampere (insulated for 2.5 kilovolts)

All of these voltages will be applied to the transmitters during "on-pad" check-out with the exception of the +1000 VDC. However, the +1000 VDC will be generated in the power supply at this time, even though it is not applied to the transmitters.

3.4.2.6.4 Prelaunch Operation

The TV Subsystem may be exercised prior to launch by access to the command switch via a hard line connection. A simulated real time command (RTC-7) will permit the subsystem to be placed in the warmup, emergency, and emergency off modes. During prelaunch operation and checkout, the power amplifiers are inhibited by a connection in the hard line and the power output is reduced to 50 milliwatts per transmitter. After the prelaunch check, the command switch is returned to the zero position where it can accept a turnoff command via the hard line, a function not available for the operational mission.

3.4.2.7 Command Switch and Control Circuits

The Command Switch and Control Circuits of the Ranger TV Subsystem shall transfer real time commands (RTC-7) and stored, preprogrammed commands from the spacecraft CC&S, and sequencer to the TV Subsystem. Commands are in accordance with Table VII.

3.4.2.7.1 RTC-7 and Command Switch Functions

The RTC-7, which is a 150 millisecond contact closure received by the spacecraft command subsystem, shall activate a command switch amplifier which shall provide a 4-ampere pulse to operate the command switch. The pulse shall cause the 4-position command switch to advance one position, making and breaking the 4 sets of contacts associated with each command switch position, providing the functions shown in Table VIII. A simplified schematic of the command switch is shown in Figure 3.4.2.7-1.

3.4.2.7.2 Preprogrammed Commands and Control Circuit Functions

In addition to the applicable commands shown in Table VII, additional monitoring circuits shall be provided to indicate application of regulated and unregulated power.

Table VII. TV Subsystem Commands

Command	Initial Command		Backup Command		Remarks
	Source	Prepro-grammed	Source	Prepro-grammed	
Operational					
Cruise Mode	CC&S (16.1 hours after launch)	Yes	First RTC-7 (Warmup Command)	No	Backup Command 66 hours after launch
Warmup	CC&S	Yes	First RTC-7	No	- - -
Power Amplifiers On	Camera Sequencer	Yes	CC&S	Yes	Terminal Mode
Camera Switch-Over	Camera Sequencer	Yes	None	- - -	2 min before Impact
Emergency	Second RTC-7	No	None	- - -	PAM Telemetry only
Emergency off (Normal operation re-established)	Third RTC-7	No	None	- - -	Return to normal operation

Table VIII. Command Switch Functions

Switch Position	Function
Zero	The starting position, battery output not applied.
Warmup	Turns on high - current regulator. Activates the cruise mode relay. Indicates command switch position via telemetry.
Emergency	Maintains the warmup signal. Energizes emergency mode relays. Indicates command switch position.
Emergency Off	Maintains the warmup signal. Deenergizes emergency mode relays. Indicates command switch position.

Table IX. Spaceframe Structural Characteristics

Characteristics	Value
Weight	(see RL-4-120)
Mass Moments of Inertia	
I_{xx}	25 slug ft.^{2} (max)
I_{yy}	25 slug ft.^{2} (max)
I_{zz}	3.5 slug ft.^{2} (max)
Center of Gravity	
$\overline{Z}$	Station 457.00 to station 460.00
$\overline{X}$	1" radius of Z axis
$\overline{Y}$	1" radius of Z axis

(See JPL Drawing J 3151940)

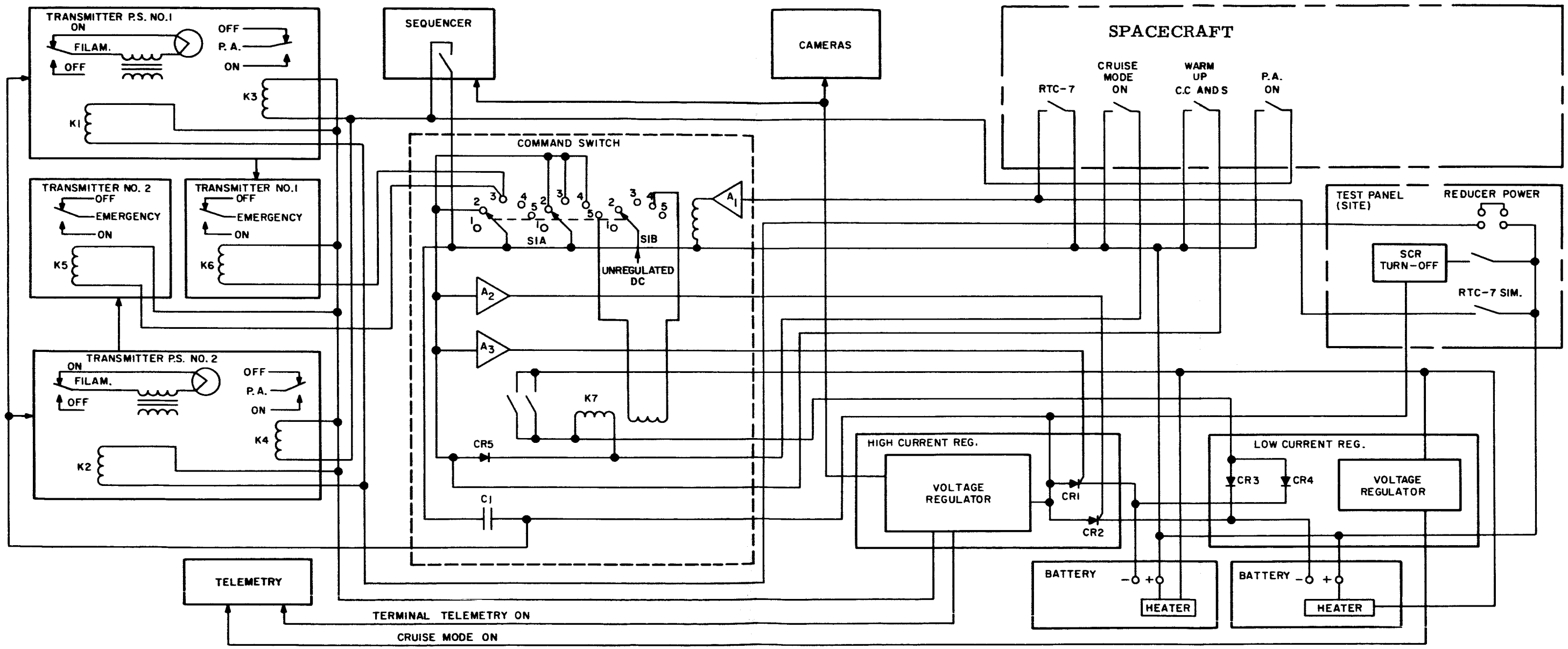

Figure 3.4.2.7-1. Command Switch and Control Circuits, Simplified Schematic Diagram

3.4.2.8 Structural and Thermal Design

3.4.2.8.1 Structural

The basic structure for the Ranger TV Subsystem flight payloads shall consist of the load carrying members which will be joined to the appropriate mounting locations on the Ranger Spacecraft. Mounting locations and attachment points shall be provided on the basic structure for the payload equipment assemblies and for the spacecraft omnidirectional antenna. The external appearance of the structure shall be that of the frustrum of a right cone topped by a cylindrical section. The primary strength of the structure shall be provided by an interior box spar consisting of stiffened panel sections supported by four longerons. Structural characteristics are summarized in Table IX.

3.4.2.8.2 Thermal

The temperature control of the TV Subsystem shall be entirely passive. A thermal shield and fins, with appropriate surfaces and finishes, shall be used to control the radiative exchange of energy between the TV Subsystem and other sources (or sinks) of thermal energy. The thermal mass of the basic structure shall be used as the primary heat sink for the energy dissipated during the terminal mode of operation of the TV Subsystem. During cruise mode operation, the control of the Ranger TV Subsystem temperature shall be such that the equilibrium temperature of the assemblies mounted in the conical section of the inert payload shall be approximately 10°C, and the temperature of the mounting structure for the heads of the camera assemblies shall be approximately 20°C. At the conclusion of the 15-minute period of terminal mode operation, including 5 minutes of warmup, the temperature of the mounting structure for the equipment assemblies shall not exceed 35°C for the cameras (vidicons) and approximately 60°C for all other equipment assemblies.

3.5 Temperature Sensors

The TV Subsystem temperature sensor assembly, including 23 associated thermistors, shall detect the temperature within the Ranger spacecraft at 15 preselected locations. The assembly shall translate these temperatures into voltages for transmission through the telemetry system to the ground station.

3.5.1 Low Range Temperature Sensor Circuit

The low range temperature sensor circuit shall monitor seven thermistor locations. The thermistor locations are shown in Table X.

Table X. Low Range Thermistor Locations

Thermistor Number	Location
1	Front housing of camera A
2	Frame 2 of assembly A-7
3	Camera mounting bracket
4	Battery case A-10
5	Battery case A-11
8	Inside battery case A-10
10	Inside battery case A-11

3.5.1.1 Operational Periods

The measurements obtained from thermistors 8 and 10 shall be transmitted to the ground station during the cruise mode. The measurements from the remaining five thermistors shall be transmitted to the ground station during the terminal mode.

3.5.2 High Range Temperature Sensor Circuit

The high range temperature sensor circuit shall monitor eight thermistor locations. The thermistor locations are shown in Table XI.

3.5.2.1 Operational Periods

The measurements obtained from thermistors 9 and 11 shall be transmitted to the ground station during the cruise mode. The measurements from the remaining six thermistors shall be transmitted to the ground station during the terminal mode.

3.5.2.2 Operating Time

The assembly shall be turned on 16-1/2 hours after launch, and shall continue to operate until impact, or approximately 66 hours after launch.

Table XI. High Range Thermistor Locations

Thermistor Number	Location
6	A quarter of an inch below power amplifier A-20, near +x axis
7	A quarter of an inch below power amplifier A-15, near the -x axis
9	On the top cylindrical thermal shield, 12 inches from the top of the assembly on the -y axis
11	Ten inches above the interface on the shield, near the +y axis
12	Ten inches above the interface on the shield, near the -y axis
13	On the bottom bulkhead, near the communication power supply and the center structural box, in the quadrant bounded by the -x and the -y axes
14	On the second bulkhead, one inch from the shield, near the -y axis
15	On the second bulkhead, one inch from the shield, near the +y axis

3.6 Signal Input and Output Summary

The interface for the JPL/RCA connections is shown in Table XII.

Table XII. RCA/JPL Interface (30J1 and 30P1)

Connector	Function	Function
30J1	Full Power On Ret	Monitor Battery A
	Full Power On	Monitor Battery B
	Fil. Relay Control	Monitor Ret
	System Turnoff	Warmup CC&S
	Charger Negative	Warmup Ret
	DC Ret	Cruise On CC&S
	Spare	Cruise On Ret CC&S
	Spare	Real Time Command
	Spare	Real Time Command Ret
	Spare	RTC-7 Simulate (hard line)
	Spare	Telemetry Shield
	Spare	Cruise Telemetry
	Spare	Cruise Telemetry Ret
	Spare	
30P1 -	RF Output, RG87A/U	
Spacecraft Omni Antenna Cable -	Cable Type RG87A/U (JPL furnished)	

(Insert in Spacecraft Design Specification Book) APPROVED

System: M. R. Maynard

Subsystem: Roy G Brereton

JET PROPULSION LABORATORY

Spec. No. RL-4-210
22 February 1962

FUNCTIONAL SPECIFICATION
RA-5 THROUGH RA-6 (P52 THROUGH P53) SPACECRAFT
SCIENTIFIC INSTRUMENTS

---

1. SCOPE

1.1 Scope

This specification covers the functional requirements for a radiation detection scientific instrument for Ranger spacecraft RA-5 and/or RA-6. The primary purpose of this instrument is to provide data on radiation levels during flights to the moon.

1.2 Description

The radiation detection instrument will consist of an ionization chamber that will measure the total integrated radiation.

2. APPLICABLE DOCUMENTS

2.1 The following documents form a part of this specification.

SPECIFICATIONS

Jet Propulsion Laboratory

Spacecraft Design Specification Book
RA-6 Through RA-9

3. REQUIREMENTS

3.1 General

The radiation experiment will detect and convert to usable electrical signals information on particle radiation at near-earth, cislunar, and near lunar space and continue to operate until spacecraft lunar impact. The generated signal shall be routed through a signal shaper circuit to prepare it for telemetry (see figure 1).

3.1.1 Electrical Power

This experiment will be powered from an isolated transformer-rectifier, which is powered in turn, from the main spacecraft power source through a DC to AC inverter provided for this function. The total power required shall not exceed 100 milliwatts.

3.1.2 Weight

The combined weight of the sensor, its containers, the transformer-rectifier, and mounting bracketry, shall not exceed the amount alloted in the Design Parameter Functional Specification (RL-4-120).

3.1.3 Thermal

The sensors shall be finished in such a manner as to exhibit a thermal environment compatible with the thermal requirements of their components. In accomplishing this requirement, the sensors will be subject to the Thermal Control Functional Specification, RL-4-540.

3.1.4 Size and Configuration

The sensors shall be packaged in the minimum volume and shall be mounted such as not to interfere with the optical sight line of the television subsystem, reference RL-4-180, Television Subsystem Functional Specification.

3.1.5 Testing and Operation

External access connectors may be mounted directly on the sensor, or test signals may be returned directly from Case III.

3.2 Functional Description of the Integrating Ionization Chamber Experiment

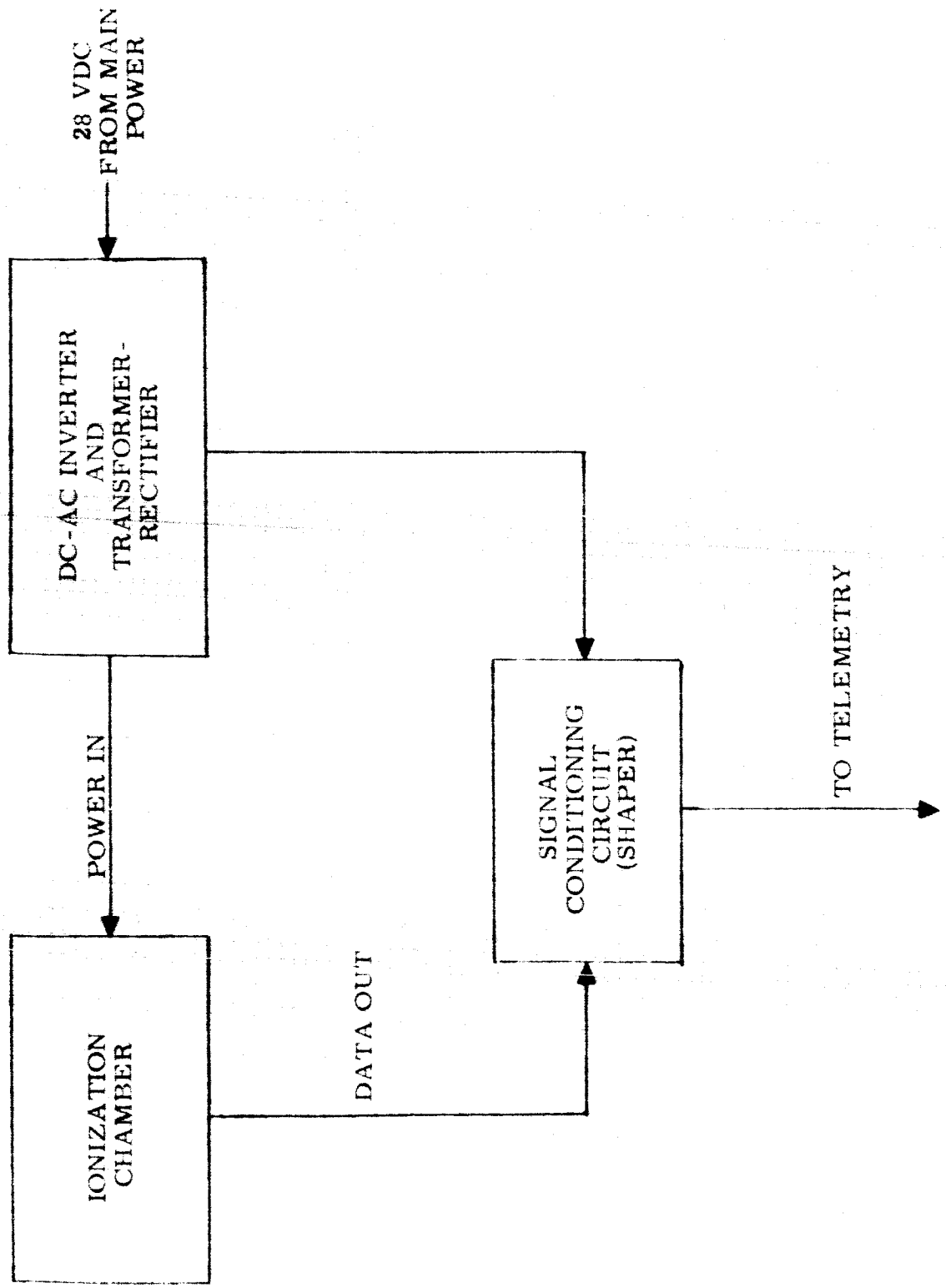

Figure 1. Block Diagram of Science Experiment

3.2.1 Description

The detector for the integrating ionization chamber experiment is a quartz fiber instrument of the Neher type. It consists of a thin spherical metal shell filled with gas at a pressure of several atmospheres. The wall thickness is such that protons above 10 mev in energy and electrons above 0.4 mev can pass through into the gas. A voltage is maintained between a cylindrical collecting electrode inside the chamber and the external spherical wall. This voltage is high enough to cause the collection of all of the charged particles created in the gas by the incident ionizing radiations. When a precalibrated amount of charge is collected, the quartz fiber system activates a recharging pulse from the chamber power supply. The time interval between recharging pulses is inversely proportional to the radiation dose rate. The recharging pulse is amplified and shaped prior to transmission by telemetry.

3.2.2 Data

a. Dynamic Range:	1 pulse per hour to 300 pulses per sec.
b. Time Resolution:	The time at which a pulse occurs should be known to within 1 sec.
c. Sampling Rate:	Continuous.
d. Duration of Data Acquisition:	Data should be recovered for the entire portion of the trajectory, (with the exception of the time required for the midcourse maneuver), from 24 minutes after launch.

3.2.3 Location on Spacecraft

The sensor will be located beneath leg D between Case III and Case IV. The inverter, transformer-rectifier and signal conditioning modules will be located in Case III.

The sensor should be located in a position that will provide a maximum view of the sun and moon within the constraints of spacecraft design. It should also be placed as far away from the main mass of the spacecraft as possible in order to minimize the effect of secondary radiation produced in the spacecraft.

(Insert in Spacecraft Design Specification Book)

APPROVED:

System: M. R. Mesnard

Subsystem: Roy G. Brereton

JET PROPULSION LABORATORY

Spec. No. RL-4-211 A
15 June 1962

SUPERSEDES:

Spec. No. RL-4-211
22 February 1962

REVISED AND REWRITTEN

FUNCTIONAL SPECIFICATION
RA-7 THRU RA-9 (P54 THRU P56) SPACECRAFT
FLIGHT EQUIPMENT
IONIZATION CHAMBER AND GEIGER-MUELLER COUNTERS

1.0 SCOPE

1.1 Scope

This specification covers the functional requirements of two scientific instruments for Ranger spacecraft RA-7 through RA-9. The primary purpose of these instruments is to provide data on radiation levels due to energetic radiations during flights to the moon.

1.2 Description

The two instruments are:

a. An ionization chamber to measure total integrated radiation

b. Three Geiger-Mueller counter tubes to measure charged particle flux in various energy ranges

The experiments have been chosen to aid in gaining data for application to subsequent manned lunar flights and to gather data of general scientific interest. The experiments will be left on throughout the entire flight

subsequent to their turn-on, with the exception that the telemetry channel assigned to scientific data will be used to telemeter engineering data during the midcourse maneuver. This maneuver occurs at a range of approximately 110,000 miles from the earth and lasts for no longer than 1 hour.

2.0 APPLICABLE DOCUMENTS

2.1 The following documents form a part of this specification:

SPECIFICATIONS

Jet Propulsion Laboratory

Spacecraft Design Specification Book
RA-6 through RA-9

3.0 REQUIREMENTS

3.1 General

The science experiment sensors will detect and convert to usuable electrical signals energetic radiation at near-earth, cislunar and near lunar space and continue to operate until spacecraft lunar impact. The generated signals shall be routed through the Data Conditioning subsystem for telemetry processing. See figure 1.

3.1.1 Electrical Power

The experiments are powered from an integrated transformer rectifier, which is powered, in turn, from the main spacecraft power sources through a dc to ac inverter provided for this function. The total power required will be 500 mw.

3.1.2 Weight

The combined weight of the sensors, their containers, and the transformer-rectifier shall not exceed the amount allotted in the Design Parameter Functional Specification RL-4-120.

3.1.3 Thermal

The sensors shall be fabricated in such a manner as to exhibit a thermal environment compatible with the thermal requirements of their components. In accomplishing this requirement, the sensors will be subject to the Temperature Control Subsystem Functional Specification RL-4-540.

3.1.4 Size and Configuration

The sensors shall be packaged in the minimum volume and shall be mounted such as not to interfere with the optical sight line of the

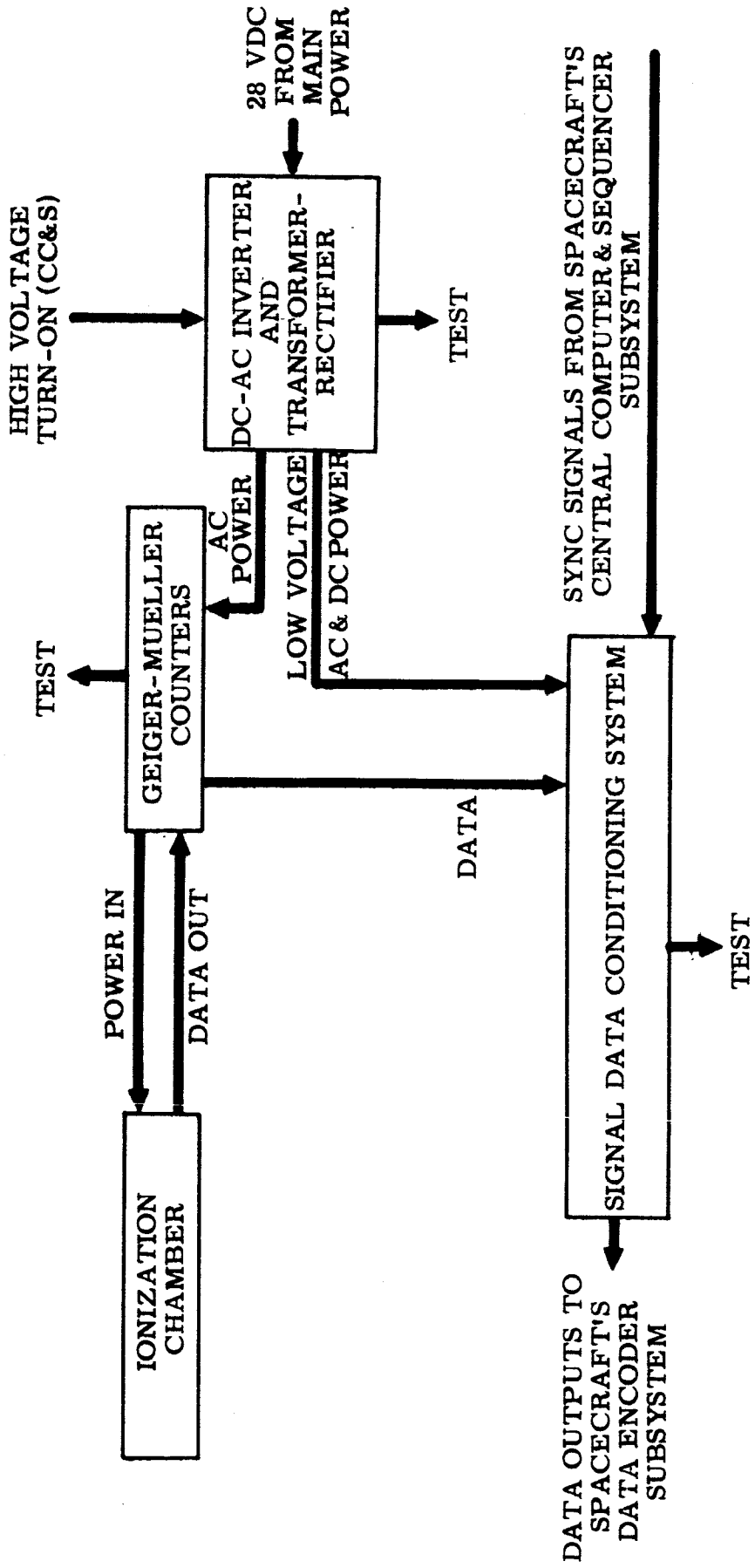

Figure 1. Block Diagram of Science Experiments

television subsystem, reference RL-4-180, Television Subsystem Functional Specification. The sensors should be oriented to provide maximum view of the sun and moon within the constraints of spacecraft design.

3.1.5 Testing and Operation

External access connectors may be mounted directly on the sensors, or test signals may be returned to the Data Conditioning subsystem, such that direct access connections may be brought out of its case (Case III).

3.2 Functional Description of the Integrating Ionization Chamber Experiment

3.2.1 Description

The detector for the integrating ionization chamber experiment is a quartz fiber instrument of the Neher type. It consists of a thin spherical metal shell filled with gas at a pressure of several atmospheres. The wall thickness is such that protons above 10 Mev in energy and electrons above 0.4 Mev can pass through into the gas. A voltage is maintained between a cylindrical collecting electrode inside the chamber and the external spherical wall. This voltage is high enough to cause the collection of all of the charged particles created in the gas by the incident ionizing radiations. When a precalibrated amount of charge is collected, the quartz fiber system activates a recharging pulse from the high voltage power supply. The time interval between recharging pulses is inversely proportional to the radiation dose rate. The recharging pulse is amplified by the chamber amplifier and the signal is sent to the Geiger-Mueller Counter Experiment, where it is shaped into a form suitable for processing by the data conditioning system prior to transmission by telemetry.

3.2.2 Data

a. Dynamic Range: 1 pulse per hour to 100 pulses per second

b. Time Resolution: The time at which the first pulse occurs in a sample should be known to within 1 second by appropriate time labeling.

c. Sampling Rate: During the terminal lunar approach phase of the flight the counting registers should be sampled at least once every 10 seconds. During flight through the radiation belts and in cislunar space the counting registers should be sampled at least once every 30 seconds.

d. Duration of Data Acquisition: Data should be recovered for the entire portion of the trajectory, with the exception of the time required for the midcourse maneuver, after power turn-on.

3.2.3 Location on Spacecraft

The ionization chamber should be placed as far from the main mass of the spacecraft as possible in order to minimize the effect of secondary radiations produced in the spacecraft. It should have as unobstructed a view of the sun as possible at all times. In addition, during the terminal phase of the flight, the chamber should have as unobstructed a view of the moon as possible.

3.3 Functional Description of the Geiger-Mueller Counter Experiment

3.3.1 Description

The instrumentation for the Geiger-Mueller counter experiment consists of three G-M counters and associated electronics. Two of these counters are type RCL 10311 and each is shielded such that protons above 10 Mev in energy and electrons above about 0.4 Mev in energy can penetrate into the gas volume and be detected. One of these counters is shielded with material that is essentially identical in composition and thickness to that of the wall of the Integrating Ionization Chamber. Since they will each be detecting the same types of particles, and since the ion chamber measures the total ionization, the combined data from this counter and the ion chamber will enable a fairly complete picture of the charged particle flux to be obtained. The other 10311 tube is shielded with beryllium. This provides some discrimination between protons and electrons. The two RCL 10311 tubes will also be operated in coincidence to give directional information. The other G-M counter is an Anton 213 with a thin end window which allows lower energy particles (protons above 0.5 Mev and electrons above 35 Kev) to be counted.

3.3.2 Data Requirements

a. Dynamic Range of Counting Rates:

Type 10311 singles rate = 3 per second to 65,000 per second for each tube
Type 10311 coincidence rate = 0 to 10,000 per second
Type 213 singles rate = 0.1 per second to 35,000 per second

b. Accuracy: Counting rates should be known to 1 percent accuracy.

c. Sampling Rate: During the terminal lunar approach phase of the flight the counting registers should be sampled at least once every 10 seconds. During flight through the radiation belts and in cislunar space the counting registers should be sampled at least once every 30 seconds.

d. Duration of Data Acquisition: Data should be recovered for the entire portion of the trajectory, with the exception of the time required for the midcourse maneuver.

3.3.3 Location and Orientation on Spacecraft

The counters should be placed as far from the main mass of the spacecraft as possible in order to minimize the effect of secondary radiations produced in the spacecraft. They should also be exposed to the sun at all times. Since the Anton 213 tube is light sensitive, the end window of the tube should be pointed at least 60° away from the sun-probe line. During the terminal lunar phase of the flight the end window of the 213 should point within 15° of the moon-probe line. The RCL 10311 tubes should be oriented parallel to each other. During the terminal phase the moon-probe line should lie in the plane of the 10311 tubes, and should be perpendicular (within ±15°) to the axis of each tube.

(Insert in Spacecraft Design Specification Book) APPROVED:

SYSTEM: M. R. Mesnard

SUBSYSTEM: Roy G. Breeton

JET PROPULSION LABORATORY

Spec. No. RL-4-212

10 May 1962

FUNCTIONAL SPECIFICATION
RA-7 THRU RA-9 (P54 THRU P56) SPACECRAFT
FLIGHT EQUIPMENT, SCIENTIFIC INSTRUMENTS
LOW ENERGY SOLAR PLASMA PROBE

1.0 SCOPE

1.1 Scope

This specification covers the functional requirements of the Low Energy Solar Plasma Probe for Ranger spacecraft RA-7 through RA-9. The primary purpose of this instrument is to detect low energy protons in the solar plasma well outside the geomagnetic field.

2.0 APPLICABLE DOCUMENTS

2.1 The following documents form a part of this specification:

SPECIFICATIONS

Jet Propulsion Laboratory

Spacecraft Design Specification
Book RA-6 through RA-9

3.0 DESCRIPTION

3.1 The instrument will detect the magnitude and direction of the proton flux in the solar plasma in the energy range of 500 to 20,000 ev.

The unit consists of four separate, curved plate, electrostatic analyzers. Charged particles entering the analyzers are deflected by an electric field which is approximately transverse to the particle velocity. Those particles with positive charge, within a certain range of energy per unit charge, and a certain range of angle of incidence, are deflected onto a charge collector. Particles which enter with a negative charge, wrong energy per unit charge, or wrong angle of incidence, strike the analyzer walls and are not recorded. The energy distributions are determined by varying the magnitude of the deflection voltage. By varying the voltage on another set of plates, in front of the analyzer, different look angles can be sampled.

Each of the four charge collectors serves as the input to separate electrometer amplifiers, which provide four analog voltage outputs.

Another analog voltage output indicates the deflection voltage, and another analog voltage output indicates the temperature of the unit.

The experiment will be left on throughout the flight subsequent to turn-on.

4.0 REQUIREMENTS

4.1 Electrical Power

The experiment is powered from an isolated transformer rectifier, which is powered, in turn, from the main spacecraft power source through a d-c to a-c inverter.

Power required is:

28v dc ±5 percent

400 mw, minimum

550 mw, average

840 mw peak, on 20 percent duty cycle

4.2 Weight

Total weight of the experiment is as specified in JPL Specification RL-4-120

4.3 Size

4.6 inches x 4.5 inches x 4.5 inches.

4.4 Thermal

The instrument shall be mounted on the spacecraft in a manner that will maintain the temperature within the range -10 to +50°C.

4.5 Location on Spacecraft

The instrument shall be mounted on the spacecraft in a location and attitude to provide a direct view of the sun, and have a look angle of 40° horizontal and 40° vertical. The long axis of the entrance window should be parallel to the plane of the ecliptic.

4.6 Data

Five data channels providing analog voltage outputs are provided. Four channels provide voltages proportional to the charged particle flux received by the analyzer charge collectors. One channel indicates the deflection voltage, and the other channel indicates temperature. These voltages are routed to the Data Conditioning Subsystem.

4.7 Testing and Calibration

An external access connector is provided for testing during normal operation. Testing can be performed by injecting small currents to the analyzer plates to simulate charged particle fluxes.

(Insert in Spacecraft Design Specification Book)

APPROVED:

System: M. R. Mesnard

Subsystem: Roy G. Preston

JET PROPULSION LABORATORY

Spec. No. RL-4-213
10 May 1962

FUNCTIONAL SPECIFICATION
RA-7 THRU RA-9 (P54 THRU P56) SPACECRAFT
FLIGHT EQUIPMENT
SCIENTIFIC INSTRUMENTS
ELECTRON/PROTON SPECTROMETER

1.0 SCOPE

1.1 Scope

This specification covers the functional requirements of the Electron/Proton Spectrometer for Ranger spacecraft RA-7 through RA-9. The primary purpose of this instrument is to detect neutron-decay electrons which may exist in space during quiet periods, and to determine to what extent the solar wind plasma may contain extremely hot protons.

2.0 APPLICABLE DOCUMENTS

2.1 The following documents form a part of this specification:

SPECIFICATIONS

Jet Propulsion Laboratory

Spacecraft Design Specification
Book RA-6 through RA-9

3.0 DESCRIPTION

3.1 The instrument will unambiguously separate electrons from protons and measure the fluxes and energies of each in the range of 50 to 800 kilovolts for electrons and 500 to 1500 kilovolts for protons. The instrument will consist of a plastic scintilator and a cesium iodide crystal, both mounted on the face of a single photomultiplier tube. The separation of electron and proton pulses will be accomplished by means of pulse shape discrimination circuits. The pulses will be analyzed by means of an eight channel differential pulse height analyzer, and the counts in each channel will be stored in analog form as charge on a capacitor. Two temperature sensors are provided to indicate temperatures of the photomultiplier tube and the amplifier assembly. Thus, there are ten channels of data, consisting of analog voltages to be read out cyclically in response to sequence pulses from the Data Conditioning System which converts the analog voltages to 7 bit digital signals for transmission by the telemetry system. The experiment will be left on throughout the flight subsequent to turn-on.

4.0 REQUIREMENTS

4.1 Electrical Power

The experiment is powered from an isolated transformer rectifier, which is powered, in turn, from the main spacecraft power source through a d-c to a-c inverter.

Power required is:

950 mw, 28 ±1 v dc -- average
1200 mw, 28 ±2 v dc -- peak load on 2.5% duty cycle

4.2 Weight

Total weight of the experiment is as specified in JPL Specification RL-4-120

4.3 Size

Total volume occupied is approximately 100 cubic inches.

4.4 Thermal

The instrument shall be mounted on the spacecraft in a manner that will maintain the temperature within the range 0 - 100°F.

4.5 Location on Spacecraft

The instrument shall be mounted on the spacecraft in a location and attitude to provide a 60°, unimpeded look angle for the scintillators. Direction of view is not important.

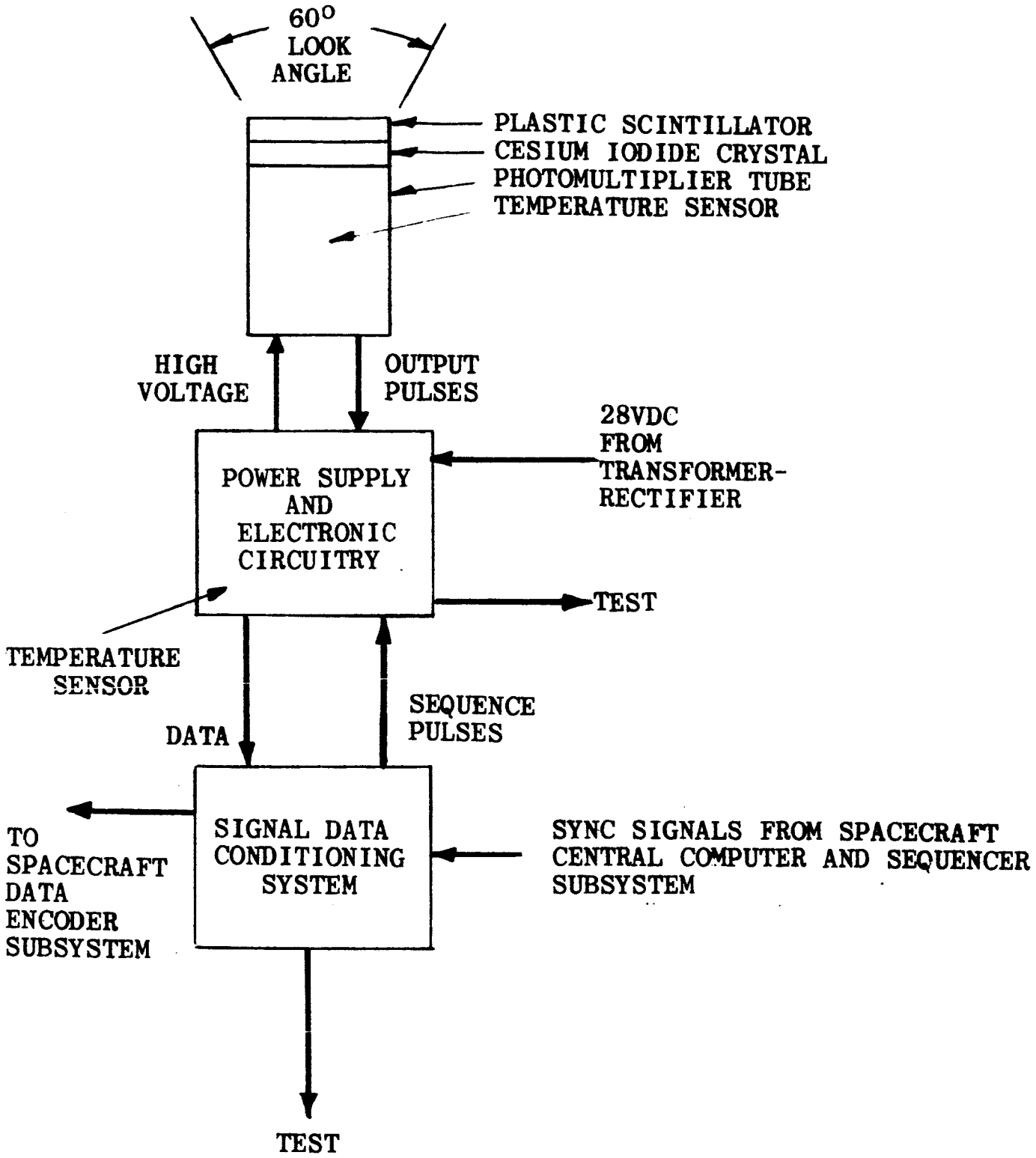

FIGURE 1 BLOCK DIAGRAM OF ELECTRON/PROTON SPECTROMETER

4.6 Data

A single wire data output is provided. 10 channels of data are read out cyclically to provide information from two temperature sensors, and an 8 channel pulse height analyzer. Alternate cycles provide data on electrons and protons. Maximum count rate is 2500 counts per second. Readout time for a complete cycle of data is 80 seconds.

4.7 Testing and Calibration

An external access connector is provided for testing during normal operation. Calibration can be performed by stimulating the scintillators with a radioactive source.

(Insert in Spacecraft Design Specification Book)

APPROVED:

System: M. R. Meanard

Subsystem: Roy G Breeton

JET PROPULSION LABORATORY

Spec. No. RL-4-214

15 May 1962

RA-7 THROUGH RA-9 SPACECRAFT
FLIGHT EQUIPMENT
ELECTRON FLUX DETECTOR

1.0 SCOPE

1.1 Scope

This specification covers the functional requirements of the Absolute Electron Flux Detector for Ranger Spacecraft RA-7 through RA-9. The primary purpose of this instrument is to provide information about the absolute electron flux in the energy range of 250 Kev to a few Mev.

2.0 APPLICABLE DOCUMENTS

2.1 The following documents form a part of this specification:

SPECIFICATIONS

Jet Propulsion Laboratory

Spacecraft Design Specification Book
RA-6 through RA-9

3.0 DESCRIPTION

The instrument consists of three solid state detectors to uniquely identify electrons in the 0.250 to 3 Mev energy range. The detectors are silicon solid state of the lithium drifted variety. Two of these detectors have a depletion layer 1.0 mm thick. One is shielded by an aluminum absorber which allows only minimum ionizing protons to be counted, and sets the upper electron energy limit for the system. The other, with a heavier aluminum shield, is the active detector, the output of which is a composite of electrons of minimum ionizing energy and protons of approximately 2 Mev energy level.

The third detector has a depletion layer of approximately 5 microns. This detector, shielded in the same manner as the active detector, is insensitive to electrons, due to the thin depletion layer. It thus serves to count only the 2 Mev protons. By subtracting the count of the two detectors from the count of the active detector, the electron flux is obtained.

Each detector is followed by a preamplifier-amplifier combination. The output of the amplifier serves as an input to a pulse height analyzer, which is set to accept only those pulses which correspond to detector excitation by energies of from 250 Kev to 800 Kev.

The three data output channels from the detectors will be one-shot counters. The count from each of the three channels will be accumulated once each data cycle.

4.0 REQUIREMENTS

4.1 Electrical Power

The experiment is powered directly from the main spacecraft power source. All conversion of this power is accomplished by a self-contained converter.

Power required is: 250 mw, 52 v p-p ±1.5%, 2400 cps square wave.

4.2 Weight

The total weight of the experiment is specified in JPL Specification RL-4-120.

4.3 Size

50 cubic inches: 4 inches by 4 inches by 3 inches (approximately).

4.4 Thermal

The instrument is to be thermally isolated from the spacecraft and provided with finishes that will maintain the unit within the operating temperature range from -25°C to +30°C.

4.5 Location on Spacecraft

The instrument is to be located on the spacecraft so that an unobstructed 30° half-angle cone of view of the sun is obtained. The orientation during the final approach to the lunar surface is not important.

4.6 Data

The data from the output of the three detectors will be in the form of a binary count. Each data channel will be sampled once per data cycle. The count from each channel will be accumulated by the 15-bit counter in the DAS.

4.7 Testing and Calibration

An external connector will provide means for monitoring internal voltages as well as providing the three data channel outputs. Stimulation of the instrument may be accomplished with a standard alpha, beta or gamma source. Counting rate from these sources should be kept below 1.0 K per minute.

(Insert in Spacecraft Design Specification Book)

APPROVED:

System: M. R. Mesnard

Subsystem: Roy G. Breeton

JET PROPULSION LABORATORY

Spec. No. RL-4-215
15 May 1962

RA-7 THROUGH RA-9 SPACECRAFT
FLIGHT EQUIPMENT
SEARCH COIL MAGNETOMETER

1.0 SCOPE

1.1 Scope

This specification describes the functional requirements of the Search Coil Magnetometer experiment for Ranger Spacecraft RA-7 through RA-9. The primary purpose of this instrument is to provide a survey of lunar electrodynamics in the frequency range of 1 to 1000 cps.

2.0 APPLICABLE DOCUMENTS

2.1 The following documents form a part of this specification:

SPECIFICATIONS

Jet Propulsion Laboratory

Spacecraft Design Specification Book, RA-6 through RA-9

3.0 DESCRIPTION

The instrument consists of a single-axis search coil magnetometer and associated electronics, divided into two packages. The detecting coil and preamplifier package can be mounted in a remote position. In this manner, spacecraft generated magnetic noise is attenuated. The main electronics package contains a spectrometer, power supply and associated circuitry. The spectrometer will consist of tuned bandpass amplifiers, with center frequencies of 3, 10, 30, 100, and 300 cps, which will analyze signals with frequency components in this range. The instrument will have in-flight calibration capability as well as automatic scale switching.

There will be six analog data output channels. One of these will indicate the scale factor.

4.0 REQUIREMENTS

4.1 Electrical Power

The experiment is powered directly from the spacecraft power source, using the transformer-rectifier module as a junction point.

Power required is: 1000 mw, 52 V p-p, ± 1.5%, 2400 cps square wave.

4.2 Weight

The total weight of the experiment is specified in JPL Specification RL-4-120.

4.3 Size

Detecting Coil: 1.0 inch by 1.0 inch by 12 inches.
Preamplifier: 1.0 inch by 1.0 inch by 2 inches.
Spectrometer: 3 inches by 3 inches by 4 inches.

4.4 Thermal

The instrument is to be mounted on the spacecraft so that the temperature does not exceed 20°C ± 20°C.

4.5 Location on Spacecraft

The instrument is to be mounted on the spacecraft so as to provide a remote location of the detecting coil-preamplifier package, and to minimize spacecraft generated magnetic noise. The orientation of the detecting coil is not critical.

4.6 Data

The data from this instrument will be in the form of six (6) analog outputs. Five of these will provide analogs of the power around the center frequencies of tuned bandpass amplifiers (f_c = 3, 10, 30 and 300 cps). The sixth channel will be used to indicate the scale of the data channels. In-flight calibration capability will be built into the instrument with "ON" and "OFF" commands generated by the Data Automation System.

4.7 Testing and Calibration

Access to the analog channels as well as other pertinent internal voltages will be provided by a separate GSE or test connector. Calibration of the instrument will be accomplished with the detector coil isolated by a flux tank.

(Insert in Spacecraft Design Specification Book)

APPROVED:

System: M. K. Mesnard

Subsystem: Roy G. Brereton

JET PROPULSION LABORATORY

Spec. No. RL-4-216
15 June 1962

FUNCTIONAL SPECIFICATION
RA-7 THROUGH RA-9 SPACECRAFT
FLIGHT EQUIPMENT
COSMIC DUST EXPERIMENT

1.0 SCOPE

1.1 Scope

This specification describes the functional requirements of the Cosmic Dust Experiment for Ranger Spacecraft RA-7 through RA-9. The primary purpose of this instrument is to provide a survey measurement of the density, location and direction of rotation of micrometeoritic particles.

2.0 APPLICABLE DOCUMENTS

2.1 The following documents form a part of this specification:

SPECIFICATIONS

Jet Propulsion Laboratory

Spacecraft Design Specification Book, RA-6 through RA-9

3.0 DESCRIPTION

The instrument consists of two detector plates with attached preamplifiers and one electronics/power supply package. The detector plates serve to detect particle impact; the generated signal is conditioned and amplified by the attached preamplifier. The electronics/power supply package generates the required internal DC voltages and senses the detector preamplifier output. Threshold detector amplifiers sense peak 100 kc outputs which change the state of the binary data output. The count rate is not likely to exceed one per minute.

4.0 REQUIREMENTS

4.1 Electrical Power

The instrument is powered directly from the spacecraft 2400 cps square wave supply. Conversion to the required DC voltages is accomplished internally.

Power required is:

52V p-p, 2400 cps square wave, 60 mw.

4.2 Weight

The total weight of the experiment, including two sensors, is as specified in JPL Specification RL-4-120, Design Parameters and Reference Designations.

4.3 Size

Sensor: 6 inches by 10 inches by 0.015 inch (excluding mounting brackets)

Electronics: 3 inches by 3 inches by 4 inches

4.4 Thermal

The operating temperature range of the instrument is -40°C to +100°C.

4.5 Location on the Spacecraft

Location of the sensors on the spacecraft shall be 180° from one another in the plane of the ecliptic and in the direction of the velocity vector. Under these conditions, one plate will look in the general direction of the moon while the other plate will look at low inclination particles in the ecliptic plane.

4.6 Data

Data will consist of binary output made up of 6 bits, with 3 bits assigned to each sensor. One bit of each 3-bit word is assigned to high energy impact; the remaining two bits are assigned to registering low energy impacts. Data will be routed to the Science Data Conditioning Subsystem for processing prior to transmission through the spacecraft telemetry subsystem.

4.7 Test

Testing of the sensor will be done by attaching a piezoelectric transducer to the sensor and injecting a calibrated pulse into the transducer. This will mechanically inject a pulse into the electronics, simulating a momentum impact. This action will trigger the appropriate memory counters and will be read out on binary state lamps.

(Insert in Spacecraft Design Specification Book) APPROVED:

System: M. R. Mesnard

Subsystem: Ray D. Burton

JET PROPULSION LABORATORY

Spec. No. RL-4-217
22 June 1962

FUNCTIONAL SPECIFICATION
RA-7 THROUGH RA-9 SPACECRAFT
FLIGHT EQUIPMENT
LOW ENERGY ION DETECTOR

---

1. SCOPE

1.1 Scope

This specification describes the functional requirements of the Low Energy Ion Detector experiment for Ranger Spacecraft RA-7 through RA-9. The primary purpose of this instrument is to measure the number-density and energy of positively charged particles with energies up to 100 ev.

2. APPLICABLE DOCUMENTS

2.1 The following document forms a part of this specification:

SPECIFICATION

Jet Propulsion Laboratory

Spacecraft Design Specification
Book RA-6 through RA-9

3. DESCRIPTION

This instrument will detect the number-density and energy of positively charged particles with energies from 0.1 to 30 e V using a retarding potential technique. The experiment will be effective in detecting low energy ions in the transition regions of the Earth's upper ionosphere, in the cislunar plasma, and in any lunar ionosphere.

The instrument consists of a planar ion trap sensor made up of a collector and two planar, concentric grids. The outermost grid will be energized by a variable or staircase potential source. The innermost grid will be biased negatively to suppress photoemission from the collector plate.

Positively charged particles, up to mass 32, with sufficient energy to overcome the retarding potential on the outermost or aperture grid will be recorded by the collector plate. By varying the aperture grid potential, the particle energy spectrum may be resolved. An analog output of the collector current provides the spectral data.

The experiment is to be energized throughout the flight, following initial power to turn-on 24 minutes after launch.

4. REQUIREMENTS

4.1 Electrical Power

The experiment is powered by an unregulated 28 vdc from the spacecraft transformer/rectifier module.

Power required is: 28 vdc ±2 percent

1.25 Watts

1.35 Watts (Maximum momentary load)

4.2 Weight

The total weight of the experiment is specified in JPL Specification RL-4-120, Design Parameters and Reference Designations.

4.3 Size

The diameter of the sensor will be 4 or 5 inches by 1 inch deep. The electronic package will not exceed 6 inches by 6 inches by 3 inches.

4.4 Thermal

The instrument shall be mounted on the spacecraft so that the operating temperature range of 0 to 50° C is maintained.

4.5 Location on Spacecraft

The sensor is to be oriented parallel to the spacecraft velocity vector, within 30°, and pointed in the lunar direction.

4.6 Data

A single data output channel provides a voltage analog of the positively charged particle density recorded at the collector plate. A spectrum of particle energies is obtained by a programmed variation in the retarding potential on the aperture grid. A complete program consists of 120 steps. Data will be processed by the Data Conditioning Subsystem prior to transmittal to the spacecraft's Data Encoder.

4.7 Testing and Calibration

Excitation of the instrument is accomplished by injection of a calibrated current. A test connector will provide access to internal voltages and functions for test purposes.

(Insert in Spacecraft Design Specification Book)

APPROVED:

System: M. R. Mesnard

Subsystem: L. J. Soforth

JET PROPULSION LABORATORY

Spec. No. RL-4-220 A
27 July 1962

REVISED AND REWRITTEN

SUPERSEDES:

RL-4-220
28 February 1962

FUNCTIONAL SPECIFICATION
RANGER FOLLOW-ON (RA-7, RA-8, RA-9) SPACECRAFT
SCIENTIFIC EXPERIMENTS
DATA AUTOMATION SUBSYSTEM (DAS)

1.0 SCOPE

1.1 This specification covers the functional description of the Data Automation Subsystem (DAS) which is used to process data from scientific instruments on the Ranger Follow-on (RA-7, RA-8, RA-9) spacecraft.

2.0 APPLICABLE DOCUMENTS

2.1 The following documents form a part of this specification:

SPECIFICATIONS

Jet Propulsion Laboratory

Spacecraft Design Specification Book
Ranger RA-6 Through RA-9

JPL 14-072

3.0 DESCRIPTION

3.1 General

Power to the Science Package, including the DAS, is turned on 24 minutes after launch. The DAS performs several basic functions relative to the preparation of data from a host of experiments for subsequent transmission through spacecraft telemetry.

a. Analog to digital conversion

b. Pulse rate to digital conversion

c. Commutation and timing

d. Frame identification

e. Instrument reset and stepping

3.1.1 The scientific experiments accommodated by the DAS are:

a.	Low Energy Solar Plasma Probe	(code:	LESP)
b.	Electron/Proton Spectrometer	(code:	EPS)
c.	Electron Flux Detector	(code:	EFD)
d.	Search Coil Magnetometer	(code:	SCM)
e.	Low Energy Ion Detector	(code:	LEID)
f.	Cosmic Dust Detector	(code:	CDD)
g.	Integrating Ion Chamber	(code:	IC)
h.	Particle Flux Detector	(code:	PFD)

All data is delivered in non-return-to-zero binary fashion to the data encoder through the DAS 8-bit shift register at the nominal rate of 25 bits per second. A functional diagram of the DAS is shown in Figure 2. Refer to figure 8 for a schematic of the GSE output circuitry.

3.2 Analog to Digital Conversion

The basic A-D conversion is an 8-bit conversion which operates on an analog signal in the form of a dc voltage level within the range of 0 to +6 volts to yield a resolution of 23.5 millivolts. Analog data readout during odd numbered words consist of the entire eight bits of the conversion. During even numbered words, the least significant bit of the 8-bit conversion is replaced by a parity bit, thus providing effectively a 7-bit conversion of +7 millivolt resolution.

The A-D converter consists of a cross-over detector for each of the analog inputs and a staircase generator activated by the 8-bit shift register which counts the output of an 8 kc multivibrator. Consequently, an A-D conversion is accomplished within one telemetry bit time and terminates with the shift register, having operated as a counter, containing the binary word which immediately shifts out to the data encoder. The A-D converter will issue a word of zeros if the analog input voltage level is not within the 0 to +6 volt range. Refer to Figure 5 for a schematic of the analog data input circuitry.

Those experiments whose outputs are analog voltage levels are listed below:

a. Low energy Solar Plasma Probe. This experiment presents five analog outputs among which the DAS commutates the A-D converter. The five outputs are labeled LESP A, LESP B, LESP C, LESP D, and LESP S. After each LESP S readout, the DAS supplies a stepping pulse to the instrument.

b. Electron/Proton Spectrometer. This experiment presents a single analog output labeled EPS to the DAS. After every readout, the DAS supplies a stepping pulse to the instrument.

c. Search Coil Magnetometer. This experiment presents six analog outputs among which the DAS commutates the A-D converter. The six outputs are labeled SCM 1, SCM 2, SCM 3, SCM 4, SCM 5 and SCM 6.

d. Low Energy Ion Detector. This experiment presents a single analog output labeled LEID to the DAS, and receives a stepping pulse from the DAS after each readout.

The rates and orders in which these data sources are read out are evident from an inspection of the DAS master frame format shown in Figure 2. The stepping pulses supplied by the DAS to the instruments are for the purpose of their internal commutation, resetting and/or calibration.

In addition to these four experiments, the DAS is designed to handle the single analog outputs of 3 temperature sensors associated with (1) the Electron Flux Detector, (2) the Low Energy Solar Plasma Probe and (3) the Particle Flux Detector.

3.3 Pulse Rate to Digital Conversion

Pulse rate data is converted to binary numbers in the DAS by counting the number of pulses that occur during given time intervals and subsequently dropping the contents of the respective counters into the output shift register at times corresponding to the master frame format shown in Figure 2. Depending on the frequency range of the pulse inputs, accuracy and pulse resolution requirements, the inputs are counted over one, two or three different intervals. Refer to Figure 4 for a schematic of the pulse rate data input circuitry.

Those experiments whose outputs are pulse rates are listed below:

a. Electron Flux Detector. This experiment presents three pulse outputs (EFD 1, EFD 2, EFD 3) among which the DAS commutates a 15-bit binary counter. The duration of count for each output is 0.92 seconds followed by a two-part parallel drop-in sequence to the 8-bit output shift register. The 0.92 second 15-bit count establishes an upper average pulse frequency of 35 kc. Double-pulse resolution is essentially established by the configuration of the pulses from the instrument.

b. Particle Flux Detector. This experiment is comprised of three Geiger-Mueller tubes whose outputs to the DAS are labeled PFD 1, PFD 2, PFD 3 and Coincidence (C) and are sampled as explained below.

1) The PFD 3 input is counted over the frequency range of 0 to 68 kc in 3 steps. The range of 0 to 5 cps is covered by performing a continuous 3-bit count which is read out once every 1.28 seconds as a 3-bit fraction of a word. The range of 5 cps to 1.6 kc (IF) is covered by using the 15-bit counter for 20.16 second intervals occurring once per four master frame time and followed by a two-part parallel drop-in sequence to the 8-bit output shift register. The range of 1.6 kc to 68 kc (HF) is covered in the same manner as that for the IF range except the count interval is 0.48 second.

2) The PFD 2 input is covered in the range of 5 cps to 68 kc in two steps in the same manner as is the PFD 3 input.

3) The PFD 1 input is handled the same as PFD 2.

4) The Coincidence output (C) of PFD 1 and PFD 2 is counted over the frequency range of 0 to 68 kc in 3 steps. The range of 0 to 5 cps is covered by performing a continuous 5-bit count. The lower order two bits of this count are read out once every 1.28 seconds as a 2-bit fraction of the same word containing the PFD 3 3-bit fraction. The entire 5-bit count is read out once every 6.72 seconds. The Coincidence input is covered in the range of 5 cps to 68 kc in two steps in the same manner as is the PFD 3 input.

3. Integrating Ion Chamber. The single input (IC) from this experiment is covered in the frequency range of 0 to 1.6 kc in two steps. The range of 0 to 5 cps is covered by performing a continuous 3-bit count which is read out once every 1.28 seconds as a 3-bit fraction of a word. This 3-bit fraction is joined with the PFD 3 3-bit fraction and the 2-bit low order Coincidence fraction to form an 8-bit word every 1.28 seconds within a subframe. This word is labeled C IC PFD 3 in the master frame format of Figure 2.

Figure 3 illustrates the manner in which these pulse rate experiments time share the 15-bit counter and the drop-in timing required to utilize the 8-bit shift register as an output buffer to telemetry.

d. Cosmic Dust Detector. Unlike the pulse rate data outputs of the above three experiments, this experiment performs its own continuous count. There is a one-bit counter and a two-bit counter combination for each of two detectors. The one-bit counters are single flip-flop stages driven by pulses from the low-gain (high energy) amplifiers, while the two-bit counters (each comprised of two flip-flops in series) are driven by pulses generated from the high-gain (lower energy) amplifiers. Lines from these six flip-flops are sampled simultaneously once per 40.32 second master frame and dumped in parallel into six digits of the 8-bit output shift register, forming the CDD word of subframe 4 of every master frame.

3.4 Commutation and Timing

As is seen in the functional diagram of Figure 1, the DAS derives all its various clock frequencies from appropriate divisions of the 400-cps signal supplied by the spacecraft central computer and sequencer (CC&S). Special input circuits modify the 400-cps signal to make it compatible with the DAS circuitry and, at the same time, provide for a standby 400-cps in case the spacecraft signal fails. Refer to Figure 6 for a schematic of the 400 cps input circuitry.

Each of the 16 analog signal inputs are provided a separate comparator circuit, which, when operated in conjunction with the commutating staircase voltage generator, forms a cross-over detector to effect the A-D conversion of that particular input signal.

The single 15-bit counter is commutated among the three pulse rate signal inputs from the Electron Flux Detector, the three from the Particle Flux Detector, the Ion Chamber input and the Coincidence input. Figure 3 pictorially describes this functioning.

The 8-bit output shift register is the most active element in the entire DAS and, with its associated gates and clocking, maintains the formatted flow of all science data to the spacecraft data encoder at the rate of 25 bits per second.

3.5 Frame Identification

Inspection of the functional diagram of Figure 1 will reveal a series of counters used for the division of the input 400 cps. The first counter is comprised of four flip-flops for the logical division by 16 to provide the bit rate of 25 bits per second. The second counter is comprised of three flip-flops for the further division by 8 to provide the rate of 8 bits per word. The third counter is comprised of five flip-flops for the next division by 21 to provide the rate of 21 words per subframe. The fourth counter is comprised of three flip-flops for division by 6, providing the

rate of 6 subframes per master frame. This counter is read out as a 3-bit subframe identification word once per subframe and cycles from 0 to 5. The fifth counter is comprised of eight flip-flops for division by 256. This counter is read out as an 8-bit master frame identification word once per master frame and cycles from 0 to 255.

In addition to this enumeration method of frame identification, the first two words of every subframe form a prescribed sequence of zeros and ones known as the pseudo-noise (PN) sequence for use in the automatic synchronization of the serial DAS output bit train with the format. Figure 1 shows the last four flip-flop stages of the 8-bit output shift register used to generate the PN sequence on appropriate timing command. The PN sequence can be generated by first assuming the 4-stage shift register reset to zero, and then connecting to the input of the first stage the output an inclusive - and circuit driven by the outputs of the last two stages. This produces the 15-bit PN sequence of 000011101100101 which, when appended with an odd-parity bit, forms the first two 8-bit words of every subframe.

3.6 Instrument Reset and Stepping

Many of the scientific instruments require a pulse stimulus periodically for internal commutation, resetting and/or calibration sequences. The following table summarizes these requirements. Refer to Figure 7 for a schematic of the step output circuitry.

	Pulse Periodicity		
Experiment	Commutation	Resetting	Calibration
CDD		1 per readout	
EPS	1 per readout		
SCM			1 per 8 master frames and 1 per 256 master frames
LESP	1 per [illegible] readouts		
LEID	1 per readout		

3.7 Physical Specifications

The DAS is a solid state electronic device which uses approximately 300 transistors. A total of about 3000 components will be mounted on four and one-half standard Ranger modules. The other half of the fifth module contains the DAS transformer/rectifier (T/R) power supply. The weight of the complete DAS is as specified in JPL Specification RL-4-120, Design Parameters and Reference Designations and the total regulated power consumption is less than two watts.

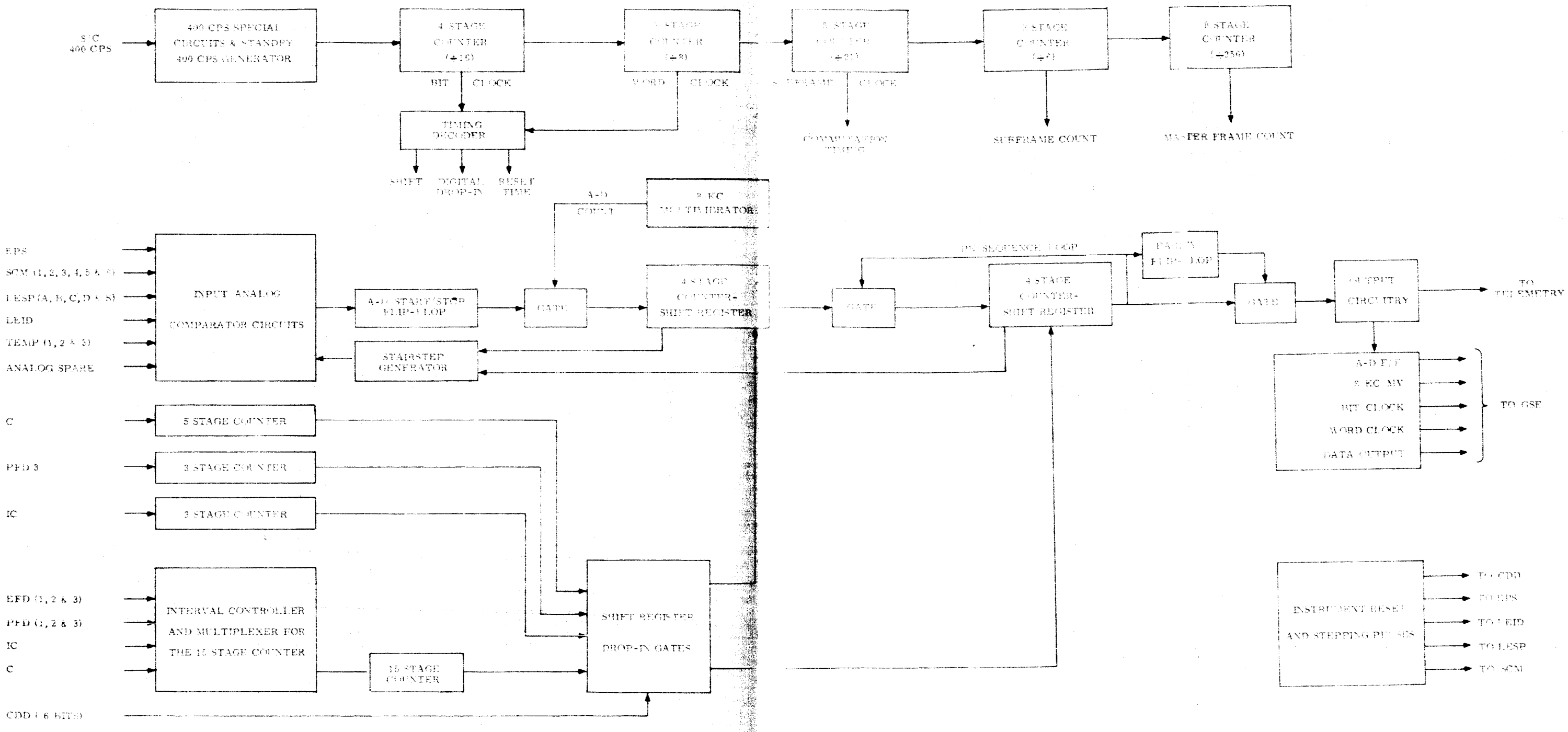

Figure 1. Ranger Follow-on, RA7, 8, & 9 Data Automation System Functional Diagram

WORD →

	1 2	3	4	5	6	7	8	9	10	11	12	13	14	15	16	17	18	19	20	21
SF 1	(PN)	C IC PFD 3	LESP A	TEMP 1	LEID	C IC PFD 3	LESP B	SCM 1	LEID	C IC PFD 3	LESP C	—	LEID	C IC PFD 3	LESP D	SCM 2	LEID	C IC PFD 3	LESP S	C SFC
SF 2	↓	↓	LESP A	TEMP 2	LEID	↓	LESP B	SCM 3	LEID	↓	LESP C	—	LEID	↓	LESP D	SCM 4	LEID	↓	LESP S	↓
SF 3	↓	↓	LESP A	TEMP 3	LEID	↓	LESP B	SCM 5	LEID	↓	LESP C	—	LEID	↓	LESP D	SCM 6	LEID	↓	LESP S	↓
SF 4	↓	↓	LESP A	COMMUTATED		↓	LESP B	— CDD	—	↓	LESP C	MFC	—	↓	LESP D	(PFD 1 HF)		↓	LESP S	↓
SF 5	↓	↓	EPS	(C HF)		↓	EPS	—	—	↓	EPS	—	—	↓	EPS	(PFD 2 HF)		↓	EPS	↓
SF 6	↓	↓	EPS	(EFD 1)		↓	EPS	(EFD 2)		↓	EPS	(EFD 3)		↓	EPS	(PFD 3 HF)		↓	EPS	↓

Abbreviations Used in the Master Frame Format:

C	Coincidence (PFD 2 & 3)
CDD	Cosmic Dust Detector
EFD	Electron Flux Detector
EPS	Electron/Proton Spectrometer
HF	High Frequency (0.48 Sec. on 15-Bit Counter)
IC	Ion Chamber
IF	Intermediate Frequency (20.16 Sec. on 15-Bit Counter)
LEID	Low Energy Ion Detector
LESP	Low Energy Solar Plasma Probe
MF	Master Frame
MFC	Master Frame Count (0 to 255)
PFD	Particle Flux Detector
PN	Pseudo - Noise (000011101100101)
SCM	Search Coil Magnetometer
SF	Subframe
SFC	Subframe Count (0 to 5)
TEMP	Temperature

Temp 1 - EFD
Temp 2 - LESP
Temp 3 - PFD

Commutated Words 5 & 6 (SF 4):

MF 1	PFD 1	IF
MF 2	PFD 2	IF
MF 3	PFD 3	IF
MF 4	C	IF
MF 5	PFD 1	IF
MF 6	PFD 2	IF
MF 7	PFD 3	IF
MF 8	IC	IF

1 Master Frame	=	6 Subframes	=	126 Words	=	1008 Bits	=	40.32 Sec.
1 MF	=	6 SF 1 SF	=	21 W 1 W	=	8 B 1 B	=	40 MSEC
	=	40.32 Sec.	=	6.72 Sec.	=	0.32 Sec.		

Odd Numbered Words = 8 Bits
Even Numbered Words = 7 Bits + 1 Parity (Odd) Bit

( ) Indicates 2-Word Readout
↓ Indicates Repetition
____ Represents Zero Readouts

Figure 2. Ranger Follow-on RA7, 8, & 9 Data Automation System Master Frame Format

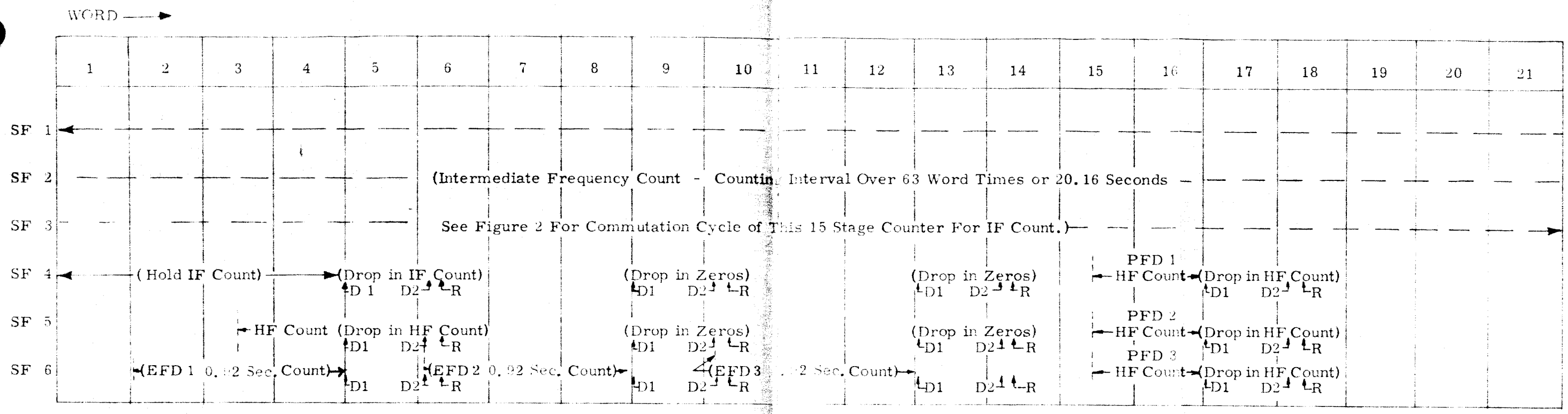

NOTES:

1. For High Frequency (HF) counts, the counting interval is over 1.5 word times or 0.48 seconds.
2. The 0.92 second counting intervals for EFD 1, 2 & 3 in SF 6 are such as to define these counts as high frequency counts, but nevertheless are not so defined.
3. The format-like block of time (40.32 seconds)shown above is most easily read as a book; i.e., time progresses from left to right (from word 1 to word 21) and from top to bottom (from SF 1 to SF6).
4. "Drop-in" referred to is into the 8 stage output shift register in two steps. D1 marks the time at which the 8 most significant digits of the 15 stage counter are dropped in, D2 marks the time at which the 7 remaining digits are dropped in and R marks the time at which the 15 stage counter is reset to zero.

Figure 3. Ranger Follow-on RA7, 8, & 9 Data Automation System 15 Stage Counter Usage Sequence

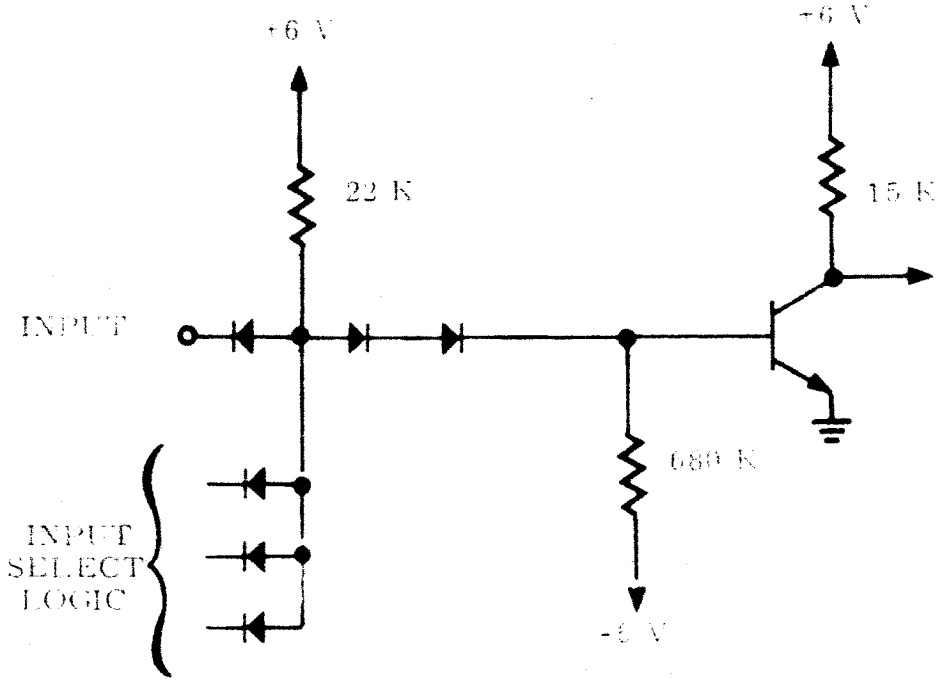

Figure 4. Pulse Rate Data Input Circuitry

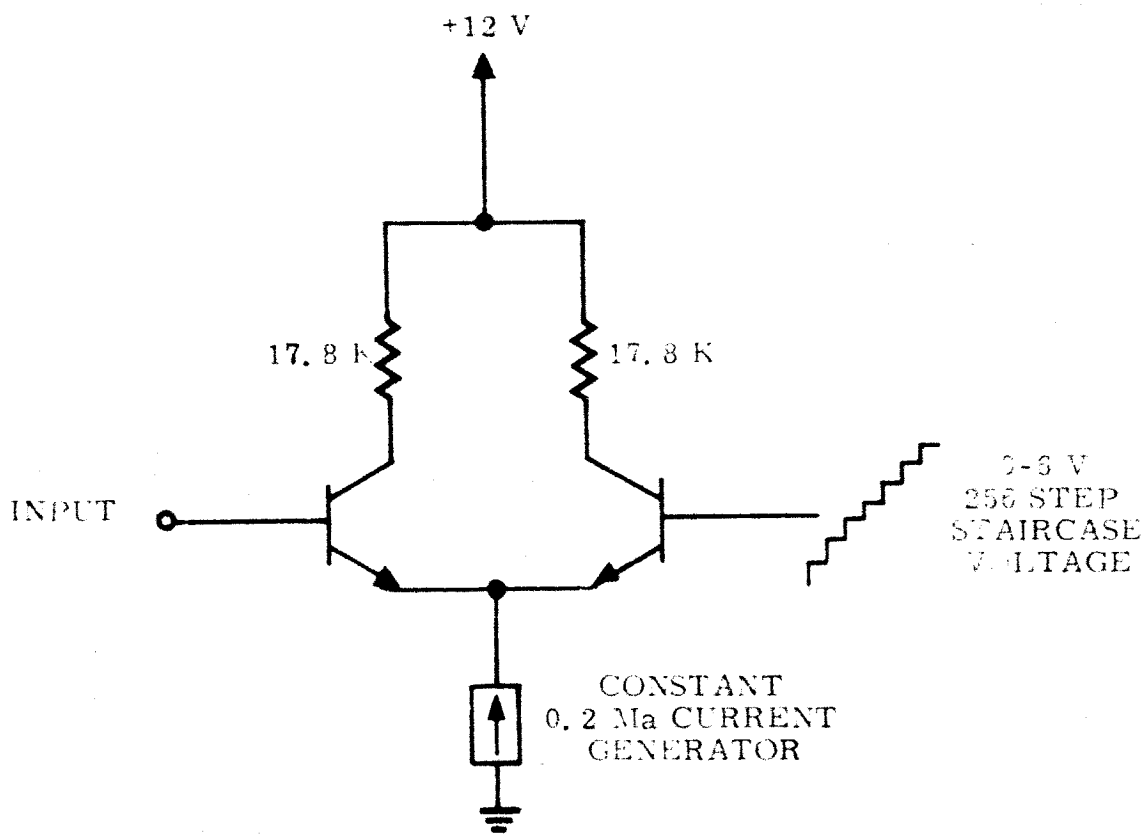

Figure 5. Analog Data Input Circuitry

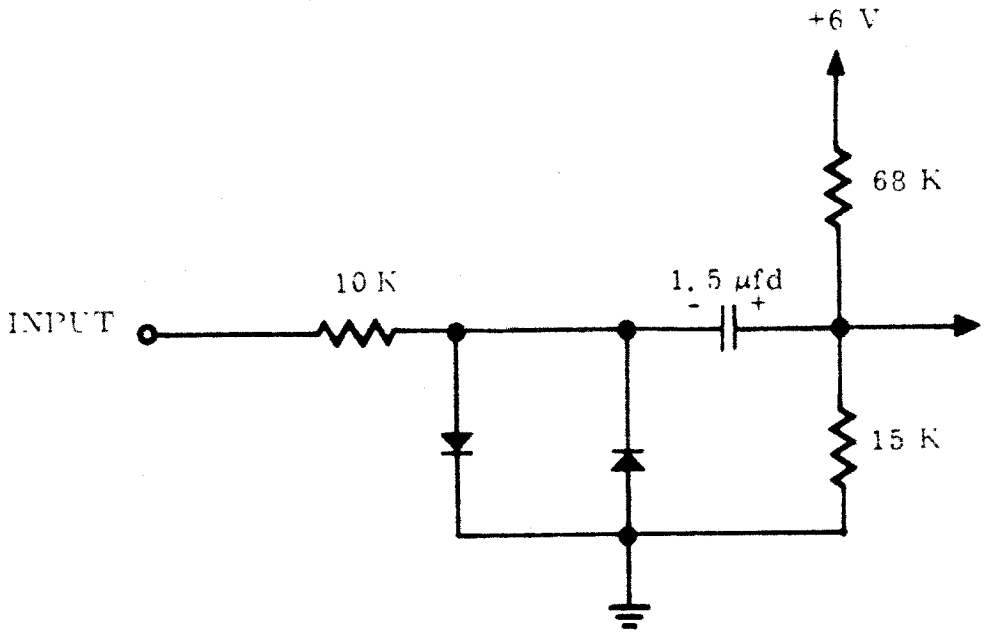

Figure 6. 400 CPS INPUT CIRCUITRY

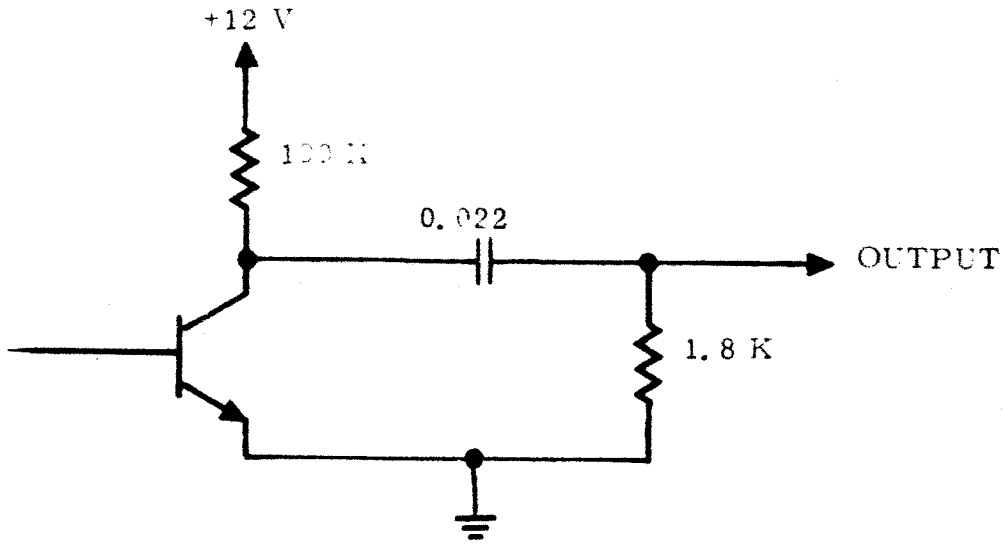

STEP OUTPUT CIRCUITRY

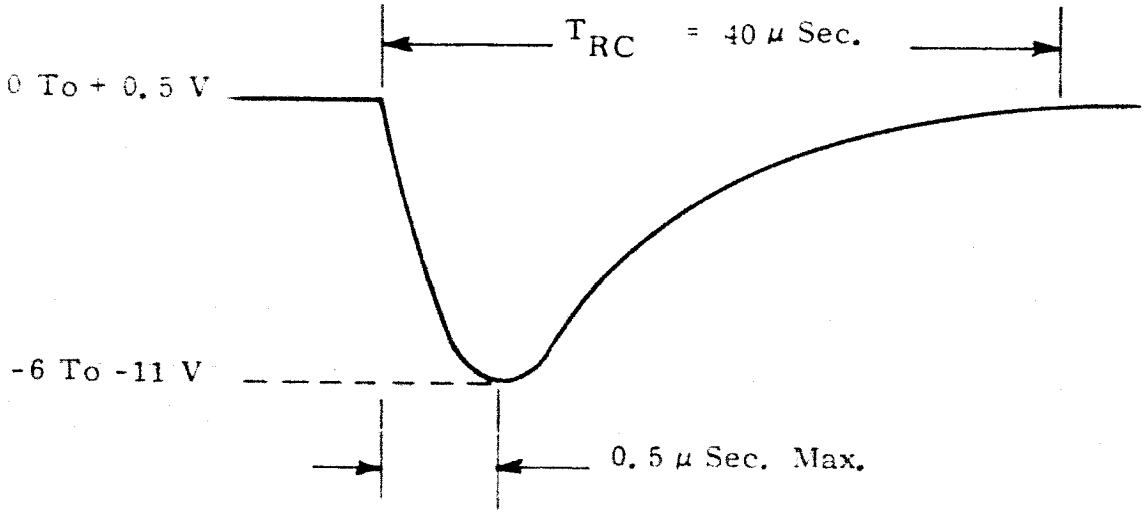

Figure 7. Waveform of Step Output Pulse

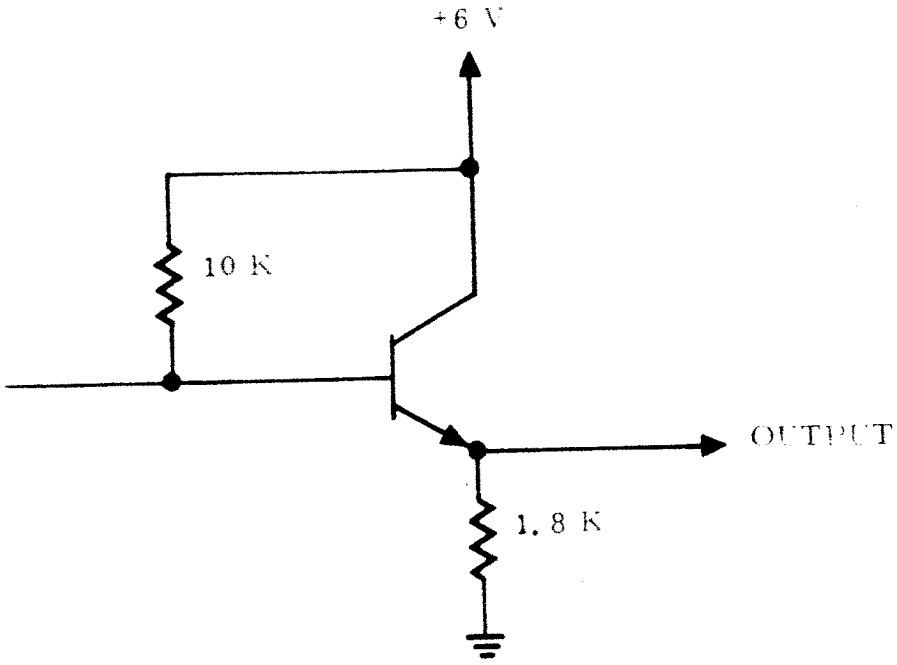

Figure 8. GSE Output Circuitry

(Insert in Spacecraft Design Specification Book)

APPROVED:

System: M. R. M[illegible]

Subsystem: [illegible]

Subsystem: [illegible]

JET PROPULSION LABORATORY

Spec. No. RL-4-321
15 March 1962

FUNCTIONAL SPECIFICATION
RANGER RA6, 7, 8, & 9 SPACECRAFT FLIGHT EQUIPMENT
DATA ENCODER SUBSYSTEM

1.0 SCOPE

1.1 Scope

1.1.1 This specification covers the functional requirements for Ranger RA6 through RA9 Spacecraft Data Encoder Subsystem. This subsystem is required to perform the functions of transducing, conditioning, commutating, and encoding that are necessary to telemeter spacecraft engineering and scientific parameters.

1.1.2 This specification does not include the generation of timing, control functions or regulated power. These are to be supplied by other spacecraft subsystems as required.

1.1.3 This specification does not cover associated radio modulation and transmission functions.

1.1.4 This specification does not cover the transducing of parameters that require extraordinary equipment complication.

1.2 Introduction

The telemetry data requirements for RA6 through RA9 are indicated in section IV of this Design Specification Book. The telemetry system shall provide approximately 90 engineering measurements divided among the attitude control system, the central power system, the central computer and sequencer (CC&S), the communication system, the midcourse propulsion system, and the spacecraft environment. This system shall also provide data encoding for the scientific experiments.

Two types of frequency multiplexed channels are used to provide encoding for the two types of data characteristics. One type of subcarrier (channels 1, 2, 3, 4, 5, and 6) carry analog type data, whereas the remaining channels (B-2, B-19, B-20, and 8) carry binary or two-state information. The spectral relationship for these channels is shown in figure 1.2-1.

2. APPLICABLE DOCUMENTS

2.1 The latest issues of the following documents form a part of this specification:

SPECIFICATIONS

Jet Propulsion Laboratory

	Spacecraft Design Specification Book Ranger RA6 through RA9
30201	Spacecraft Environmental Specification

DRAWING

Jet Propulsion Laboratory

5-105974	Block Diagram, Data Encoder, Ranger Follow-on

3. DESCRIPTION

3.1 General

3.1.1 Block Diagram

A block diagram of the RA6 through RA9 Data Encoder is shown in figure 3.1.1-1.

3.1.2 Required Functions

The Data Encoder is required to encode all signals that are to be telemetered from the spacecraft. To perform this function it must:

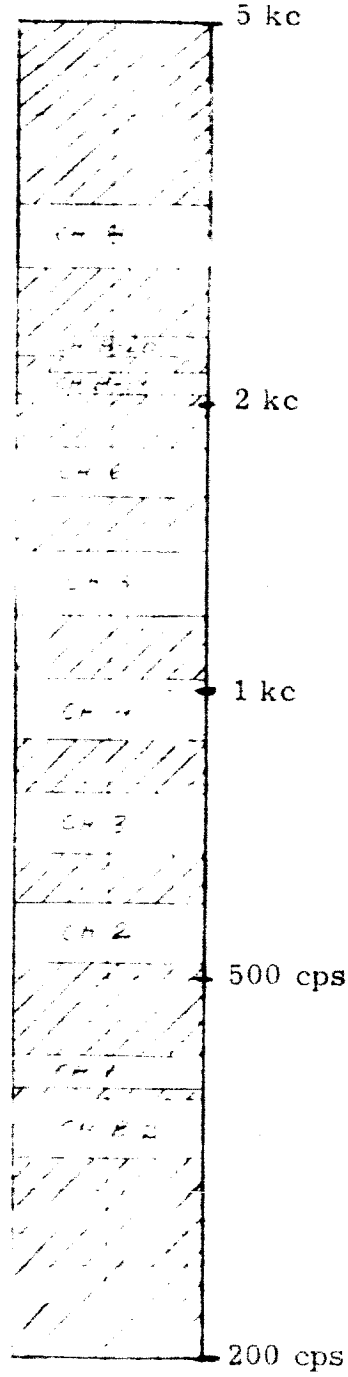

Data Modes I, II, III & IV

Figure 1.2-1. Spectral Relationship RA6 Through RA9 Data Encoder

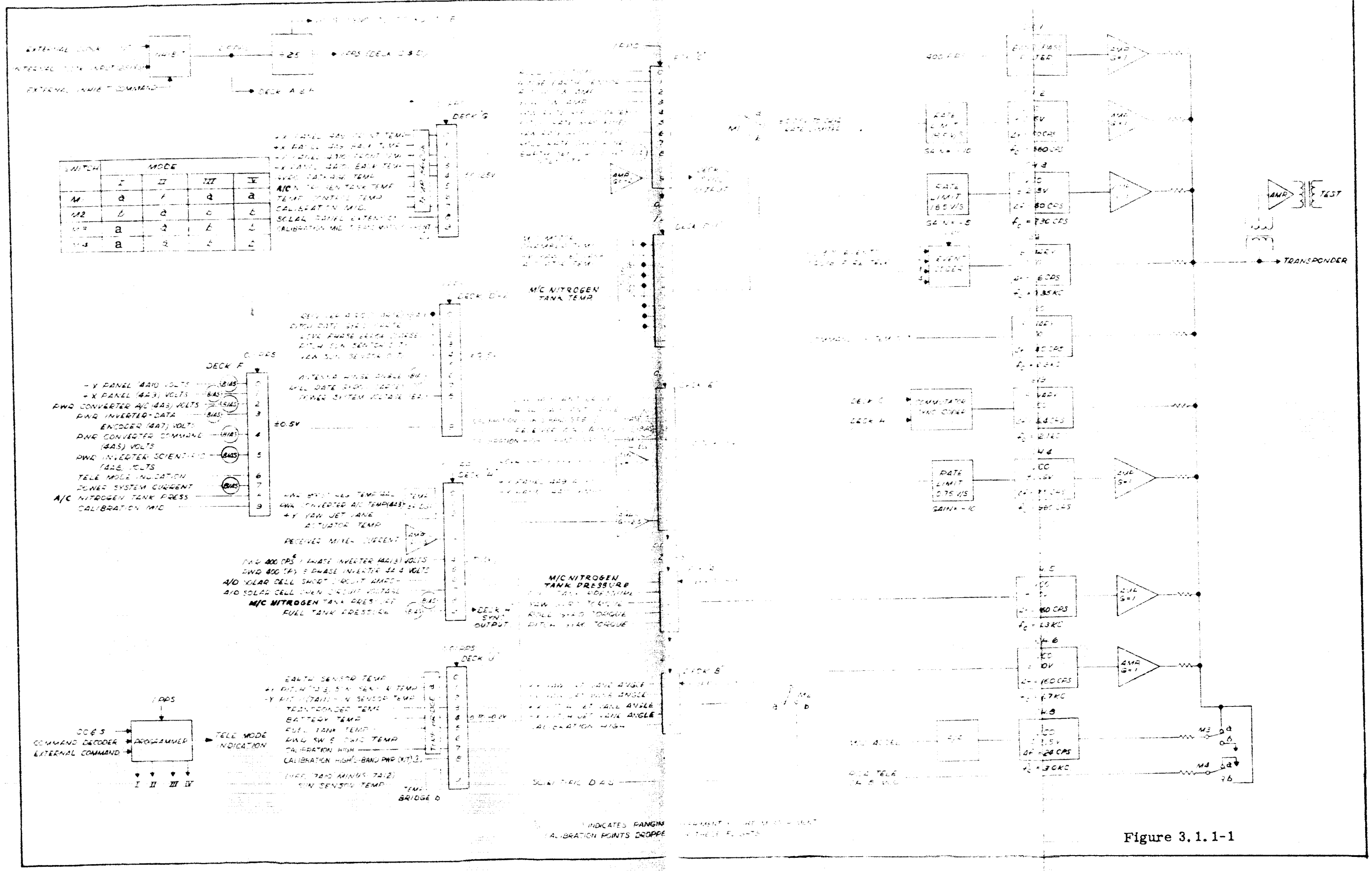
EXTERNAL CLOCK
INTERNAL CLOCK INPUT
EXTERNAL INHIBIT COMMAND
INHIBIT
÷25
DECK A & B
DECK G
SWITCH
MODE
I
II
III
IV
M1
M2
M3
M4
CALIBRATION MID
SOLAR PANEL EXTENSION
M/C NITROGEN TANK TEMP
DECK F
-X PANEL (4A10) VOLTS
+X PANEL (4A3) VOLTS
PWR CONVERTER A/C (4A3) VOLTS
PWR INVERTER-DATA ENCODER (4A7) VOLTS
PWR CONVERTER COMMAND (4A5) VOLTS
PWR INVERTER SCIENTIFIC (4A8) VOLTS
TELE MODE INDICATION
POWER SYSTEM CURRENT
A/C NITROGEN TANK PRESS
CALIBRATION MID
±0.5V
DECK H
SYNC OUTPUT
M/C NITROGEN TANK PRESSURE
FUEL TANK PRESSURE
DECK U
EARTH SENSOR TEMP
TRANSPONDER TEMP
BATTERY TEMP
FUEL TANK TEMP
CALIBRATION HIGH
SUN SENSOR TEMP
TEMP BRIDGE b
1 PPS
CC&S
COMMAND DECODER
EXTERNAL COMMAND
PROGRAMMER
TELE MODE INDICATION
I II III IV
M/C NITROGEN TANK TEMP
M/C NITROGEN TANK PRESSURE
DECK E
DECK B
DECK C
DECK H
COMMUTATOR SYNC CODER
RATE LIMIT 0.75 V/S
RATE LIMIT 16.5 V/S
EVENT CODER
AMP
TEST
TRANSPONDER
M3
M4
INDICATES RANGING
CALIBRATION POINTS DROPPED

Figure 3.1.1-1

a. Condition all measurements to the required levels.

b. Time multiplex at the proper rate those signals which are to be sampled.

c. Provide voltage rate limiting of the sampled data to a value consistent with the communication system design.

d. Provide synchronization signals to enable proper de-commutation on the ground.

e. Provide encoding for event and binary type information.

f. Provide proper modulation signals to the transponder.

g. Provide a modulation signal to the Agena telemetry system.

h. According to a pre-programmed plan, select data, which is to be telemetered only during some portions of the mission.

3.1.3 Subsystem Elements

To perform the functions listed in section 3.1.2, the Data Encoder subsystem must contain the following elements:

a. A signal conditioning system, including amplifiers and resistance bridges.

b. Data commutators.

c. Voltage rate limiters.

d. Voltage controlled and binary controlled oscillators and event encoders.

e. Modulation mixing and isolation circuitry.

f. A programmer to provide data selection during flight.

3.1.4 Operational Modes

The Data Encoder subsystem is required to have three data modes, these are two cruise and one midcourse modes. These modes are selected by the CC&S according to a pre-programmed plan. The modes are programmed as follows:

a. Mode I - Launch to start of midcourse maneuver.

b. Mode II - Midcourse maneuver.

c. Mode III & IV - Post midcourse maneuver to lunar impact.

The data encoder programmer from RA345 is maintained in its original configuration to cover possible future requirements for a fourth mode. Modes III and IV are identical at present.

The measurements to be telemetered in the various modes shall be as specified in Functional Specification RL-4-380 through RL-4-383. The channel designation for commutated measurements is given by the following code:

Example 6 - A - 1

Channel Number

Commutator Deck

Commutator Segment

3.2 Detail Description

3.2.1 Channel Mechanization

The Data Encoder shall provide ten subcarrier channels in Modes I through IV.

3.2.1.1 Channel B-2, Modes I Through IV

This is a binary channel used to transmit serially encoded event information at a one bit per second rate. The nominal center frequency is 350 cps and the deviation is -1.6 cps. An event coder is used to add a distinctive address to events on each of four inputs.

3.2.1.2 Channel 1, Modes I Through IV

This is a measurement of the 400 cps clock frequency in the spacecraft. The frequency is transmitted as a subcarrier at 400 cps with a measurement range of ±15 cps. Since the commutator drive pulses are derived from this 400 cps clock, the channel 1 frequency is required by the ground decommutator to reconstruct the commutation rate.

3.2.1.3 Channel 2, Modes I Through IV.

Twenty-nine engineering measurements, nineteen time multiplexed at a one per second rate and ten multiplexed at a once per ten second rate shall be allocated to IRIG channel 2. The center frequency shall be 560 cps and the total deviation shall be ±25 cps. The multiplexed signal shall be acted upon by a rate limited amplifier to limit the maximum rate of change of the voltage controlled oscillator output to 155 cps/second and the maximum frequency excursion to a value no greater than ±60 cps from center frequency. The error of the reduced data at channel threshold shall be no more than ±5 percent of full scale.

3.2.1.4 Channel 3, Modes I Through IV

Nineteen engineering measurements, nine time multiplexed at a once per second rate and ten multiplexed at a once per ten second rate shall be allocated to IRIG channel 3. The center frequency shall be 730 cps and the total deviation shall be ±25 cps. The multiplexed signal shall be acted upon by a rate limited amplifier to limit the maximum rate of change of the voltage controlled oscillator output to 185 cps/second and the maximum frequency excursion to a value no greater than ±60 cps from center frequency. The error of the reduced data at channel threshold shall be no more than ±5 percent of full scale.

3.2.1.5 Channel 4, Modes I Through IV

Twenty-eight engineering measurements, eight time multiplexed at a once per ten second rate and twenty multiplexed at a once per hundred second rate shall be allocated to IRIG channel 4. The center frequency shall be 960 cps and the total deviation shall be ±37 1/2 cps. The multiplexed signal shall be acted upon by a rate limited amplifier to limit the maximum rate of change of the VCO output to 11.2 cps/second and the maximum frequency excursion to a value no greater than ±45 cps from center frequency. The error of the reduced data at channel threshold shall be no more than ±5 percent of full scale.

3.2.1.6 Channel 5, Modes I Through IV

Five engineering measurements are assigned to IRIG channel 5. These measurements are time multiplexed at a 25 sample per second rate. The center frequency shall be 1.7 kc and the total deviation shall be ±80 cps. The error (2 sigma) of the reduced data at channel threshold shall be no more than ±15 percent of full scale.

3.2.1.7 Channel 6, Mode II

Four engineering measurements and one calibration measurement are assigned to IRIG channel 5. These measurements are time multiplexed at a 25 sample per second rate. The center frequency shall be 1.7 kc, and its total deviation shall be ±80 cps. The error (2 sigma) of the reduced data at channel threshold shall be no more than ±15 percent of full scale.

3.2.1.8 Channel 6, Modes I, III, and IV

Channel 6 shall be used for binary scientific data. The center frequency of this channel shall be 1.7 kc and its total deviation shall be ±80 cps.

3.2.1.9 Channel B-19, Modes I Through IV

This is a binary channel used to transmit a distinctive waveform for synchronization of decommutated data. The distinctive waveform is derived from two decks of the data multiplexing switch. The nominal

center frequency is 2.1 kc and the total deviation is -6.4 cps. The channel is capable of transmitting a binary waveform at a rate of four bits per second.

3.2.1.10 Channel B-20, Modes I Through IV

This is a binary channel used to transmit two engineering measurements which are already coded in a binary form. The channel is capable of transmitting data at a rate of 2.5 bits per second. The nominal center frequency is 2.3 kc and the total deviation is -4.0 cps.

3.2.1.11 Channel 8, Modes I and II

This is a binary channel used to transmit one engineering measurement which is in binary form. The channel is capable of transmitting data at a rate of 25 bits per second. The nominal center frequency is 3.0 kc and the total deviation is ±12 cps.

3.2.1.12 Channel 8, RCA, Modes III and IV

A portion of the channel spectrum shall be made available to the RCA subsystem for fifteen engineering measurements time multiplexed at a 1.5 sample per second rate and allocated to IRIG channel 8. The center frequency shall be 3.0 kc and the total deviation ±50 cps. The RCA channel 8 voltage controlled oscillator shall be located in the RCA subsystem with transformer isolation at its output. The RF modulation index adjustment shall be made in the Data Encoder.

4.0 POWER, CONTROL AND SIGNAL REQUIREMENTS

Regulated power and control signals are furnished by other spacecraft subsystems. The requirements for these items are given below:

4.1 Power

The regulated power requirements are given in table 4.1-1.

Table 4.1-1. Regulated Power Requirements

Voltage Volts DC	Absolute Voltage Limits	Stability Percent	Allowable Ripple MV(pk-pk)	Average Power Watts	Peak Power Watts
+28	±4 V	-	280	5.9	5.9
+20	±1 %	±1/2 %	200	4.0	4.0
-20	±1 %	±1/2 %	200	1.5	1.5
+6	±1 %	±1/2 %	60	0.6	1.0
-6	±1 %	±1/2 %	60	0.5	0.5
				Total	12.9 Watts

4.2 Control Signals

4.2.1 400 pps Frequency Reference

4.2.1.1 Characteristics of CC&S Pulse

a.	Stability	0.1 percent
b.	Voltage	+6 VDC supplied by Data Encoder
c.	CC&S Gate Resistance	open $\geq$ 100 k ohms closed $\leq$ 60 ohms
d.	Rise Time	$\leq$ 1.0 μ sec
e.	Fall Time	$\leq$ 350 μ sec
f.	Duration	1.0 m sec
g.	Waveform	see figure 4.2-1a.

4.2.2 25 pps Commutator Advance

4.2.2.1 Characteristics of CC&S Pulse

a.	Stability	0.1 percent to be derived directly from the 400 pps frequency reference
b.	Voltage	+6 VDC supplied by Data Encoder
c.	CC&S Gate Resistance	open $\geq$ 100 k ohms closed $\leq$ 60 ohms
d.	Rise Time	$\leq$ 1.0 μ sec
e.	Fall Time	$\leq$ 350 μ sec
f.	Duration	1.0 m sec
g.	Waveform	see figure 4.2-1b.

4.2.3 Mode Advance

4.2.3.1 Characteristics of CC&S Pulse

a.	Voltage	+6 VDC supplied by Data Encoder
b.	CC&S Gate Resistance	open $\geq$ 100 k ohms closed $\leq$ 60 ohms
c.	Noise Duration	$\leq$ 0.5 m sec
d.	Fall Time	$\leq$ 350 μ sec
e.	Duration	1.0 m sec
f.	Waveform	see figure 4.2-1c.

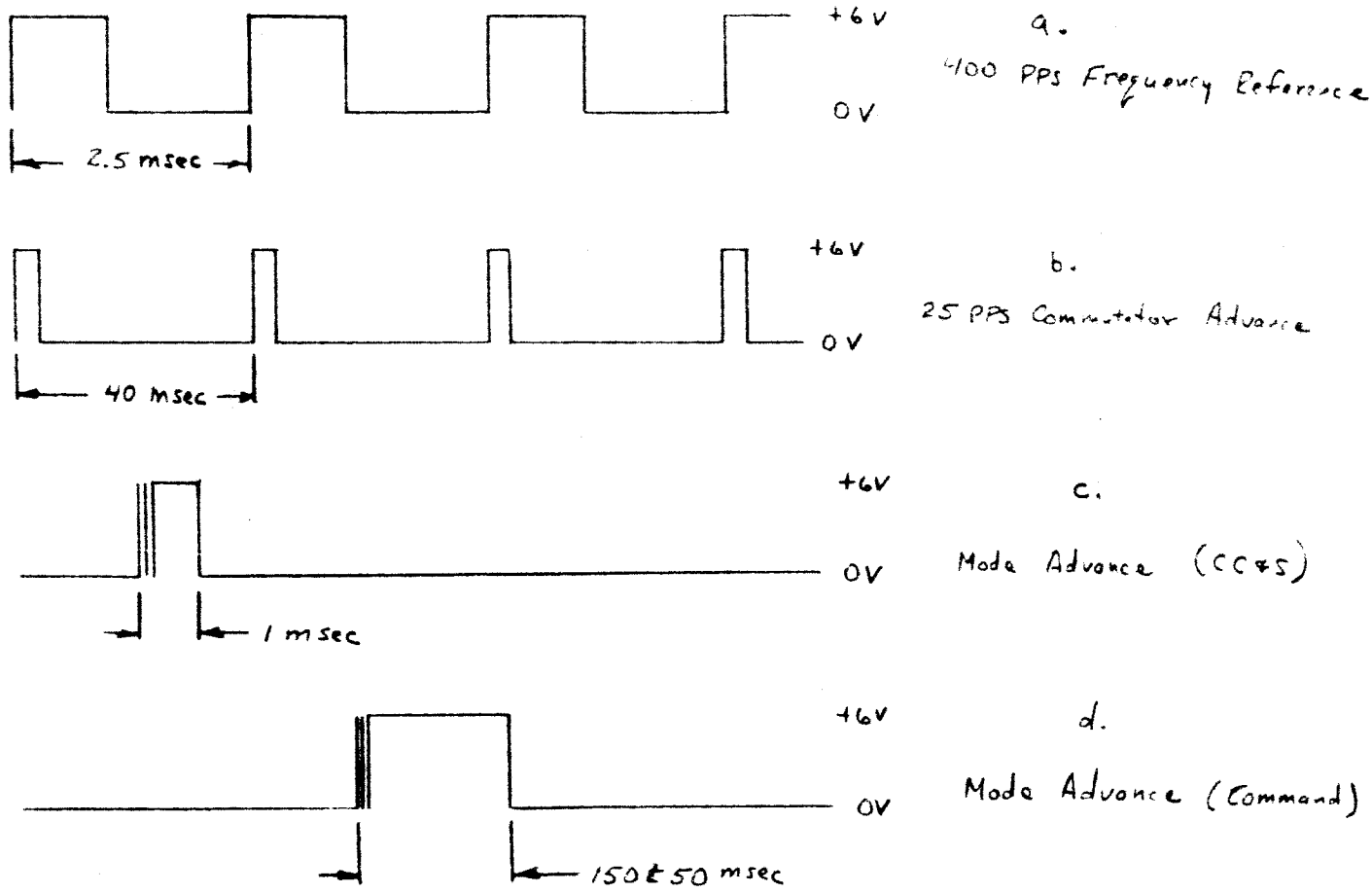

Figure 4.2-1. Control Signal Waveforms

4.2.3.2 Characteristics of Command Subsystem Pulse

a.	Voltage	=	+6 VDC supplied by Data Encoder
b.	Contact Bounce	=	$\leq$ 250 μ sec
c.	Duration	=	150 ±50 m sec
d.	Source Resistance	=	relay contacts, < 1 ohm
e.	Waveform	=	see figure 4.2-1 d.

4.3 Signal Inputs

All measurement voltages are to be as defined in the Design Specification Book in the column Data Encoder Input Range. The Data Encoder is to provide conditioning for all signals to encode them in a form suitable for modulation of the rf subsystem.

4.4 Signal Outputs

The Data Encoder shall provide signal outputs for rf modulation and ground test.

4.4.1 RF Modulation

The Data Encoder shall furnish an isolated composite mixed subcarrier signal to the rf subsystem. Each subcarrier amplitude shall be capable of being adjusted to provide the proper rf modulation indices.

4.4.2 Mixed Signal Test Output

An isolated composite mixed subcarrier signal shall be provided for ground test. This output shall be short-circuit proof in that a short on this output shall not affect the modulation to the rf subsystem. This output shall also be connected to the Agena telemetering system for modulation of their transmitter during the preinjection phase of the mission. The signal to the Agena transmitter shall be 1.50 volt rms into a load of 10 k ohms.

4.4.3 Ground Test Outputs

Outputs shall be provided to enable ground control equipment to identify the position of and control the data commutator and to identify the data mode.

4.4.4 Mode Indicator

A measurement called tele mode indication, channel 3-F-6, is to be made and used as an indication of data modes during the mission. This system uses four discrete subcarrier frequencies as mode indicators. The nominal frequency and tolerance for each mode is given below:

Mode	Subcarrier Frequency - cps	
	Nominal Value	Tolerance
I	705	+8 -30
II	722	+8 -8
III	739	+8 -8
IV	756	+8 -8

5.0 CONSTRAINTS

5.1 Total Power Consumption

The total regulated power consumption shall be less than 12.9 watts.

5.2 Maximum Volume

The Data Encoder shall occupy no more than one standard spacecraft case.

5.3 Maximum Weight

The Data Encoder shall weigh no more than the weight specified in the Design Parameter Functional Specification RL-4-120.

5.4 Environment

The Data Encoder shall operate within tolerances while subjected to the applicable portions of JPL Specification 30201.

(Insert in Spacecraft Design Specification Book)

APPROVED:
System: M. R. Maxwell
Subsystem: [illegible]
Subsystem: [illegible]

JET PROPULSION LABORATORY

Spec. No. RL-4-322
15 March 1962

FUNCTIONAL SPECIFICATION
RA-6 THROUGH RA-9 SPACECRAFT
SPACECRAFT COMMAND SUBSYSTEM

---

1. SCOPE

1.1 This specification covers the functional requirements for the Ranger RA-6 through RA-9 Spacecraft Command Subsystem including the functions of detection and decoding required to determine the presence of commands at the output of the spacecraft radio receiver and route the commands to the appropriate spacecraft subsystems.

1.2 This specification does not include the associated ground encoding, radio transmission, and radio reception functions.

2. APPLICABLE DOCUMENTS

2.1 The following documents apply to this specification:

SPECIFICATIONS

Jet Propulsion Laboratory

30358	Design Specification, Digital Command Decoder Subsystem and Associated Checkout Instruments, Ranger Agena PTM-3

30359

Design Specification, Ranger/Agena PTM-3 Flight Equipment, Command Decoding System, Asynchronous Digital Command Detector Subsystem

Spacecraft Design Specification Book, RA-6 through RA-9

3. DESCRIPTION

3.1 General

The spacecraft command subsystem shall detect and decode ground commands in the form of binary frequency shift keying of an audio frequency subcarrier as shown in figure 3.1-1.

The subcarrier signal is recovered within the spacecraft transponder and is applied to the spacecraft command subsystem which shall be comprised of two elements, the command detector and the command decoder.

The command detector establishes bit sync and detects each digit of each command word. The binary digital output of the command detector is applied to the input of the command decoder. This element then decodes the command address, and proceeds to process the command in the appropriate manner. Stored commands are applied to the CC&S in serial binary form, and real-time commands are executed by momentarily actuating the designated relay within the command decoder.

3.1.1 Command Complement

The commands required for RA-6 through RA-9 are listed in table I. The commands shall be divided into the following two categories:

a. Real-time commands

b. Stored commands

3.1.1.1 Real-Time Commands

Real-time commands shall cause momentary actuation of the relay in the command decoder which is designated by the command address.

3.1.1.2 Stored Commands

Stored commands shall transfer both the address and data portion of the command word to the CC&S in serial binary form.

3.1.2 Word Format

A standard command word shall be comprised of 18 serial binary digits. The first digit, a binary one, acts as a framing bit. The next five digits are the command address block, and the final twelve digits, the data

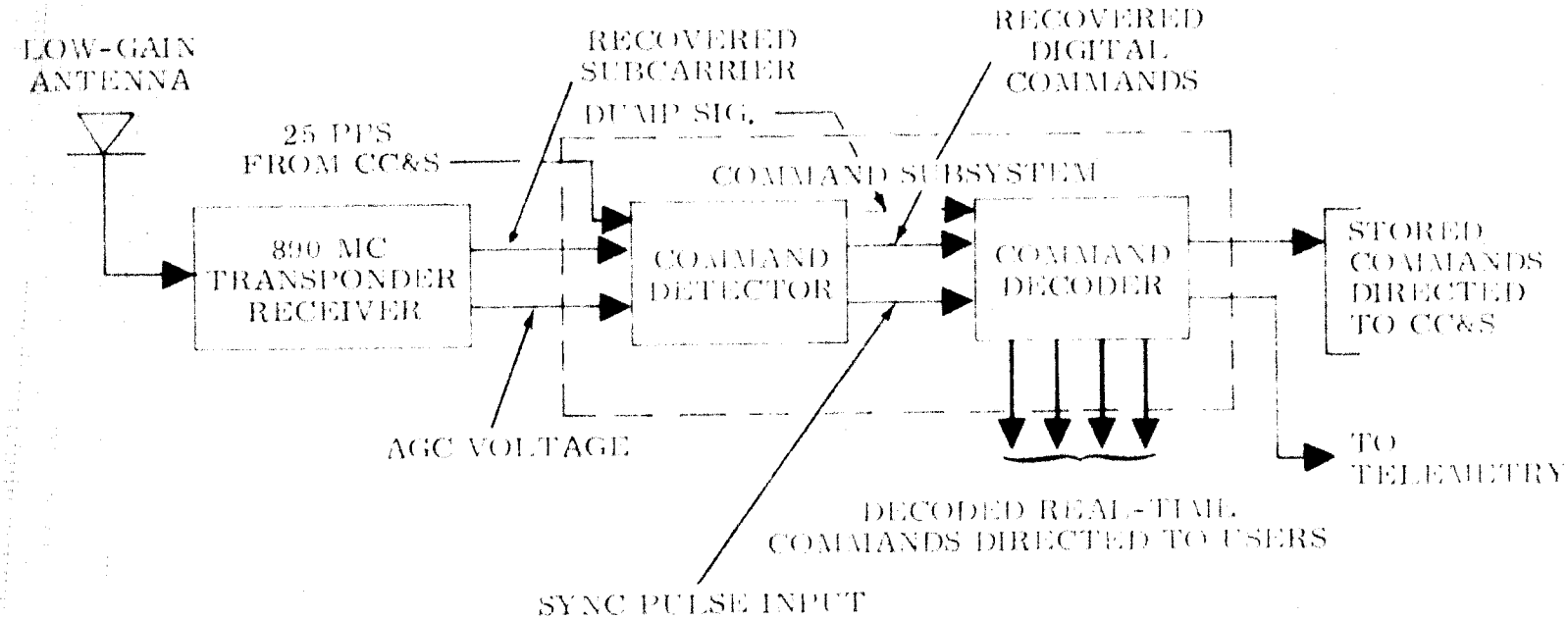

Figure 3.1-1 Spacecraft Command Subsystem

Table 1

LIST OF RA-6 THROUGH RA-2 COMMANDS

Command Designation	Command Description	Resultant Action
RTC-1	Roll Override	150 ± 50 ms relay closure
RTC-2	Antenna Hinge Angle Override	150 ± 50 ms relay closure
RTC-3	Antenna Switchover	150 ± 50 ms relay closure
RTC-4	Begin Midcourse Maneuver	150 ± 50 ms relay closure
RTC-5	Telemetry Mode Change (Backup)	150 ± 50 ms relay closure
RTC-6	Begin Terminal Maneuver	150 ± 50 ms relay closure
RTC-7	Backup Command for TV Subsystem Cylic Switch	150 ± 50 ms relay closure
(1) SC-1	Midcourse Roll Maneuver Duration	17 digit word to CC&S
(1) SC-2	Midcourse Pitch Maneuver Duration	17 digit word to CC&S
(2) SC-3	Midcourse Velocity Increment	17 digit word to CC&S
(1) SC-4	Terminal First Pitch Maneuver Duration	17 digit word to CC&S
(1) SC-5	Terminal Yaw Maneuver Duration	17 digit word to CC&S
(1) SC-6	Terminal Second Pitch Maneuver Duration	17 digit word to CC&S

Note: A 'clear' command, designated RTC-0, is used to clear the shift registers prior to issuing real-time or stored commands both during ground testing and in-flight and has the format 1-00000-000000000000. The probability of successful clearing is greatly enhanced by transmitting two (2) consecutive clear commands at each occasion.

(1) For maneuver commands, the last bit transmitted (termed the 'polarity' bit) will have the convention of binary "1" for a positive turn and binary "0" for a negative turn.

(2) The mid-course motor can be prevented from igniting (in the event a velocity change is not required) by transmitting all binary "1's" for the magnitude. The motor will ignite but will not extinguish until the fuel is completely used by transmitting all binary "0's" for the magnitude.

block, represents the magnitude and polarity of the stored commands. The command address completely identifies which command has been sent. Although the data block contains no information in the case of real-time commands, those digits shall be transmitted as binary zeros to maintain the standard command word format.

3.1.3 Modulation Type

The command system shall employ a subcarrier which in frequency-shift-key (FSK) modulated by the command word. Each command word shall be expressed in non-return-to-zero serial binary form, and received at a one bit-per-second rate. The spacecraft bit sync information shall be generated by the detector. Bit sync is a pulse occurring once each second. The bit sync signal shall be started by the first bit of the command word and shall be generated for 30 seconds after the start of the word.

3.1.4 Subsystem Elements

The command subsystem shall be comprised of the following two elements:

a. The command detector

b. The command decoder

3.2 Command Detector

3.2.1 Block Diagram

Figure 3.2-1 is a logic diagram of the command detector.

3.2.2 Sequence of Operation

The command subcarrier is frequency-shift-keyed in the following manner. When a binary 'one' is being transmitted, the frequency is that of the ONE tone. At all other times, the frequency is that of the ZERO tone.

3.2.2.1 Detection

The FSK-modulated subcarrier is first passed through the input amplifier and then into the bandpass filter which has a bandpass of 100 cycles centered between the ONE frequency and the ZERO frequency. From the bandpass filter, the signal passes through the limiter amplifier into the tuning fork bandpass filter. The narrow-band tuning fork filter receives the amplitude limited signal and further discriminates against any signals which are not precisely at the frequency of the ONE tone of the modulated subcarrier. The ZERO tone which is 30 cycles below the ONE tone produces zero output (-25db) from the tuning fork filter. When the modulated subcarrier is at the ONE frequency, the output of the output amplifier is converted to a dc voltage by the envelope detector. Conversely, when the

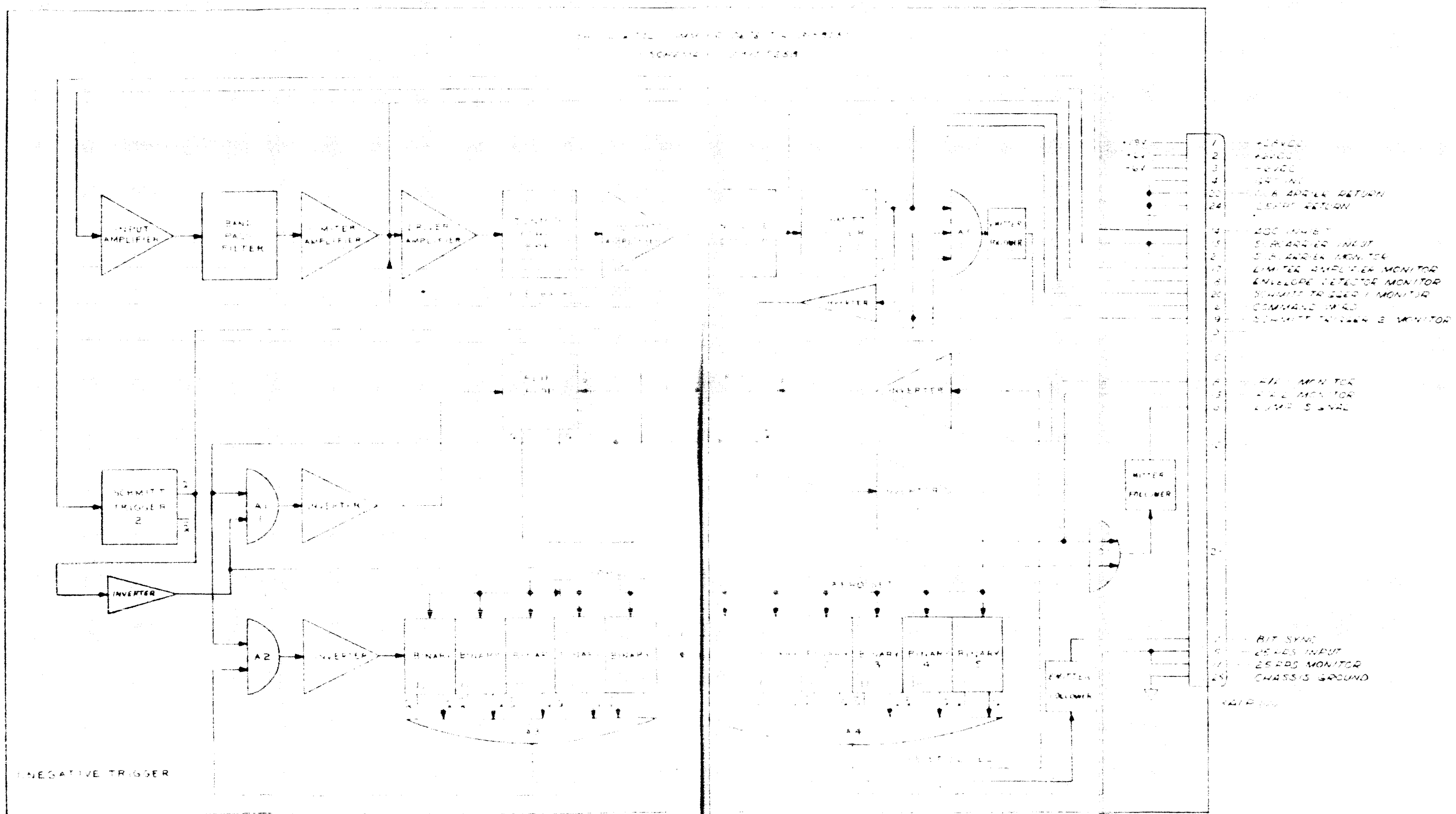

Figure 3.2-1. Command Detector

subcarrier is at the ZERO frequency, the filter output is negligible, and the output of the envelope detector is zero.

The dc signal from the envelope detector actuates a Schmitt trigger (STI) which generates binary "ones" and "zeros" going to gate A5. If gate A5 is open, the binary "ones" and "zeros" are passed through the emitter follower and out of the command detector.

The output of STI is only one of three inputs to gate A5. A second input is received from another Schmitt trigger (ST2), which produces a "one" when the transponder AGC is at a sufficient level to insure acceptable signal-to-noise ratios. The output of flip-flop 2 (FF2) also goes to A5 and during a normal cycle of operation it produces a "one" output. ST2 and FF2 then must gate A5 to allow a command word to appear at the output of the command detector.

3.2.2.2 Sync

The digital logic of the command detector consists of two flip-flops which control gating functions, and a series of 11 binary dividers which count down from the 25 pps clock input to produce a 1 pps bit sync pulse and a reset pulse at the end of a 56-second counting period. The normal sequence of events in the operation of the sync circuits of the command detector shall be as follows:

a. An AGC signal of sufficient amplitude is applied to ST2 which produces a binary "one" which is applied to A5 and a binary "zero" which is applied to gates A1 and 01.

b. The framing bit is received by the command detector which produces a binary "one" at the output of ST1. This bit is sent to gate A5 and inverted to FF1.

c. The negative voltage step at the input of FF1 sets the flip-flop and produces a binary "one" which opens gates A1 and A2.

d. 25 pps clock pulses pass through gate A2 and into the binary divider chain where they are counted down to a 1 pps rate for the bit sync pulses and the reset pulse on the 56th bit sync pulse. The bit sync pulse is delayed 320 ms from the leading edge of the framing bit. Next, the bit sync pulse is passed through an emitter follower and appears at the output of the command detector.

e. The reset pulse is used to reset FF1 which closes gates A1 and A2 and which produces a reset pulse for FF2 and the binary divider chain thereby completing a cycle of operation.

f. If the AGC should drop below threshold while gate A1 is closed, a binary "zero" will be produced by ST2, inverted, and applied to gates A1 and 01 which produces an inhibit-dump signal at the output of the command detector. The binary "zero" is applied directly to gate A5. When the AGC rises, the inhibit-dump signal is removed immediately.

g. If the AGC should drop below threshold while the command detector is in a cycle of operation and gate A1 is open, a binary "zero" will be produced by ST2, inverted, and applied to gates A1 and 01 which produces an inhibit-dump signal at the output of the command detector. However, since gate A1 is open, the signal passes through and sets FF2 which applies a binary "one" to gate 01 to maintain the inhibit-dump signal and a binary "zero" to gate A5 to block any command information which may appear. The binary "zero" from ST2 is also applied to gate A5. When the AGC rises, the inhibit-dump signal is not removed until FF2 is reset at the end of the cycle.

3.3 Command Decoder

3.3.1 Block Diagram

Figure 3.3-1 is a logic diagram of the command decoder.

3.3.2 Sequence of Operation

The bit sync pulses from the command detector trigger a single shot chain which produces three sync pulses staggered in time. P1 is the timing pulse, P2 is the stored command sync pulse, and P3 is the read-in (shift) pulse.

The binary command received from the command detector is applied to a Schmitt trigger for shaping and for producing the complementary outputs required by the shift registers. The normal sequence of events in the operation of the command decoder is as follows:

a. The framing bit sets flip-flop 1 (FF1) which opens gates A1 and A3. Opening Gate A1 allows the timing pulse P1 to reach the binary counting chain and opening Gate A3 allows pulse P3 to shift the first bit into the shift registers. Each succeeding bit sync pulse generates P1 and P3 to continue the count and to continue shifting the command into the shift registers.

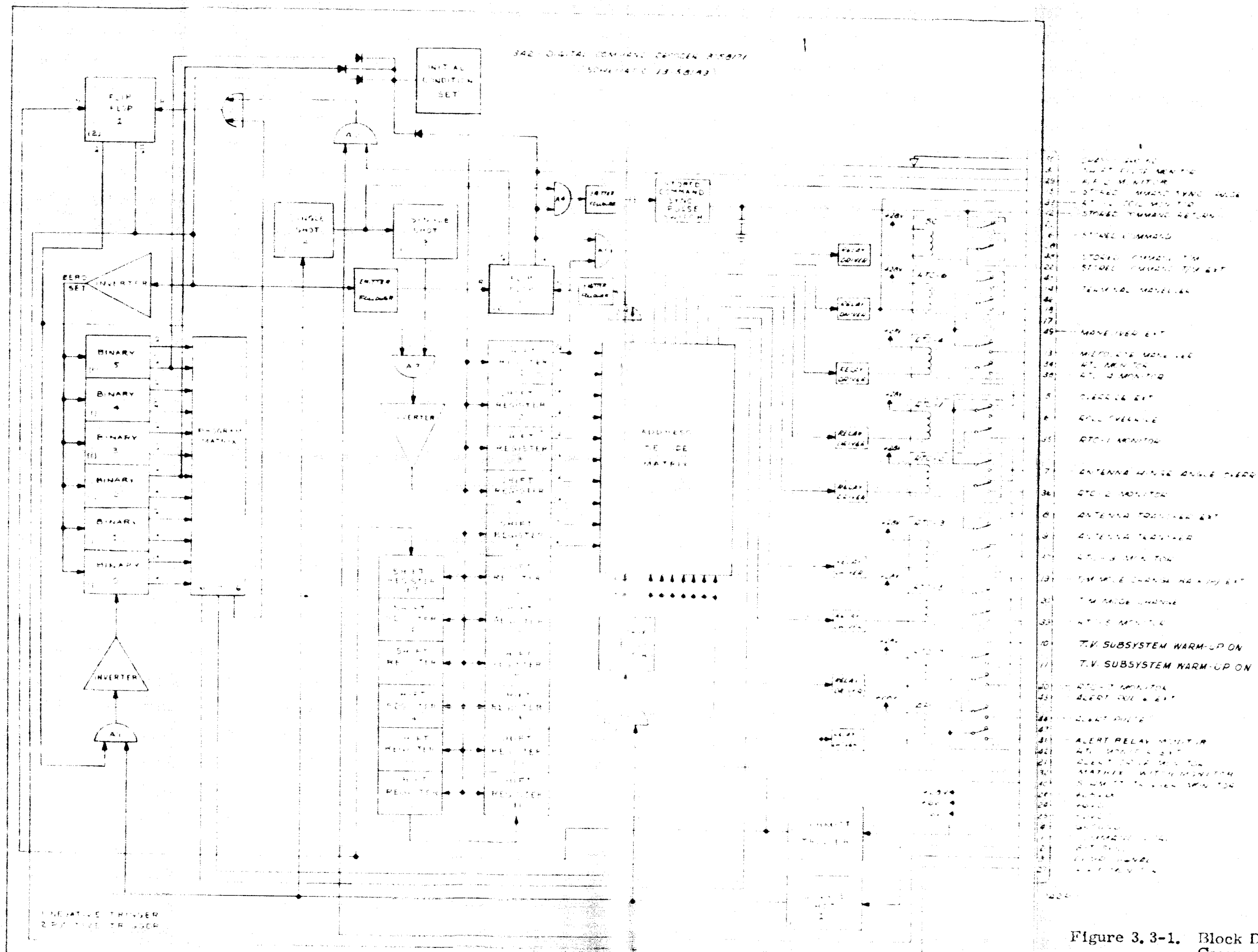
INITIAL CONDITION SET
FLIP FLOP 1
ZERO SET
INVERTER
BINARY 5
BINARY 4
BINARY 3
BINARY 2
BINARY 1
BINARY 0
INVERTER
A1
A2
A3
A4
A5
A6
A7
A8
A9
A10
A11
A12
A13
A14
A15
A16
A17
A18
A19
A20
A21
A22
A23
A24
A25
A26
A27
A28
A29
A30
A31
A32
A33
A34
A35
A36
A37
A38
A39
A40

b. On the 16th count, the program matrix produces a pulse which operates a relay driver. The relay closure is used by CC&S as an "alert" pulse.

c. After the 18th read-in pulse, the shift registers have the five address bits in shift registers 1 through 5 and the magnitude and polarity bits in shift registers 6 through 17. The framing bit has been shifted out and lost.

d. On the 19th count, a pulse is produced by the program matrix and applied to gate A6 allowing the 19th P1 to trigger the matrix supply switch. The pulse from the matrix supply switch is applied to the address decode matrix where it is routed to the appropriate output line by the command address contained in shift registers 1 through 5.

e. If the address is that of a real-time command, the matrix supply pulse is routed to the appropriate relay driver and produces a relay closure for the duration of the pulse.

f. If the address is that of a stored command, the matrix supply pulse is routed through gate 02 to set flip-flop 2 (FF2).

g. When FF2 is set it opens gates A4 and A5 and closes gate A2. Gate A4 allows P2 to trigger the stored command sync pulse switch to supply sync pulses to CC&S to store the command. Gate A5 allows the command bits to operate the stored command relay and transfer the command bits to the CC&S and to the data encoder for monitoring. Gate A2 prevents the inhibit-dump signal from resetting FF1.

h. On the 36th count, the program matrix produces a pulse which passes through gate 01 and resets FF1. When FF1 is reset it closes gates A1 and A3, resets FF2, and resets the binary counting chain to "zero".

i. If an inhibit-dump signal is applied while a stored command is being read into the CC&S, it is blocked by gate A2. This is done because the entire command is stored in the command decoder at this time and there is no reason to inhibit the read-out. If an inhibit-dump signal is applied while a command is being read into the command decoder, it passes through gates A2 and 01, resetting FF1 and terminating the cycle thereby preventing an incomplete command from being acted on. If FF1 is reset, the inhibit-dump signal has no effect.

j. The initial condition set circuit prevents any command from being generated upon initial power application.

4.0 Boundaries (Interfaces) and Parameters

The command system input shall be a modulated subcarrier signal from the spacecraft 890/960 mc transponder. The signal ground shall be common between these two systems. DC isolation shall be maintained between the command system and all other spacecraft systems. The real-time command relays shall be contained and controlled by the command system. Each real-time command user shall have an isolated set of contacts on the assigned relay. The stored (quantitative) commands shall be supplied to the CC&S in the form of serial binary coded words of fixed length. One command system monitor signal shall be applied to the data encoder and telemetered.

4.1 Boundary Definitions

4.1.1 Command Detector

The signal inputs and outputs of the command detector shall be as follows:

a. Subcarrier input from transponder.

b. AGC input from transponder.

c. 25 pps clock input from CC&S.

d. Command word output to decoder.

e. Bit sync output to decoder.

f. Inhibit-dump signal output to decoder.

4.1.2 Command Decoder

The signal inputs and outputs of the command decoder are as follows:

a. Command word input from detector.

b. Bit sync input from detector.

c. Inhibit-dump signal input from detector.

d. Alert pulse relay closure output to CC&S.

e. Real-time relay closure (7 each) outputs to appropriate users.

f. Stored command sync pulse output to CC&S.

g. Stored command relay closure output to appropriate users.

4.1.3 Command Subsystem and GSE

The following signals shall be made available to be monitored by the command ground support equipment (GSE) through a direct access connector:

a. Subcarrier input.

b. 25 pps clock input.

c. Command word output.

d. Bit-sync output.

e. Inhibit-dump signal output.

f. Alert pulse relay closure output.

g. Real-time relay closure outputs.

h. Stored command sync pulse output.

i. Stored command relay closure output.

The following additional signals shall be made available to be monitored by the GSE in a bench test configuration:

j. +28 vdc.

k. + 6 vdc.

l. - 6 vdc.

m. Limiter amplifier output.

n. Envelope detector output.

o. Schmitt trigger 1 (detector) output.

p. Schmitt trigger 2 (detector) output.

q. Flip-flop 1 (detector) output.

r. Flip-flop 2 (detector) output.

s. Shift pulse output.

t. Alert pulse drive output.

u. Matrix supply pulse output.

v. Schmitt trigger (decoder) output.

w. Flip-flop 1 (decoder) output.

x. Flip-flop 2 (decoder) output.

y. Relay driver 6 output.

4.2 Parameters

The threshold signal-to-noise ratio for the command subcarrier shall be no greater than +20 db in a 5 cycle bandwidth. At this signal-to-noise ratio, the bit error probability shall be no greater than 1×10^{-5}. The amplitude threshold of a noise free signal is 100 mv rms or better. The command rate is one bit per second with a minimum time of 57 seconds between separate command transmissions. A command consists of 18 non-return-to-zero bits. The first bit is a framing bit, the next five are the address, and the next twelve are data.

5.0 Constraints

5.1 Number of Commands

The decoder is mechanized to decode 7 real-time commands and 6 stored commands. It has 7 real-time command lines and two stored command lines. The decoder may be programmed to recognize as many as 24 stored commands and 7 real-time commands.

5.2 Total Power Consumption

The total allowable power consumption of the command subsystem shall not exceed 3.69 watts. The nominal power consumption is 2.37 watts steady-state with peaks of 3.61 watts. This power shall be divided as follows:

a. Command Detector

1. +28 vdc - 1540 mw
2. + 6 vdc - 270 mw
3. - 6 vdc - 75 mw

b. Command Decoder

1. +28 vdc - 15 mw s-s. 1260 mw peak
2. + 6 vdc - 330 mw
3. - 6 vdc - 75 mw

5.3 Maximum Volume

The maximum allowable volume of the command subsystem shall not exceed 1080 cm^3 which is divided as follows:

a. Command Detector - 1260 cm^3

b. Command Decoder - 720 cm^3

5.4 Maximum Weight

The maximum allowable weight of the command subsystem shall be that allotted in the Design Parameter Functional Specification, RL-4-120.

5.5 Operational Constraints

It is necessary to transmit two framing bits after power turn-on, and before each group of commands or independent commands to insure that the logic is correctly set for command reception and not in some random state due to power transients. The maximum command rate is one command every 57 seconds.

5.6 Environment

The command subsystem shall be designed to be capable of operating in the following environments.

a. Maximum temperature +75°C

b. Minimum temperature -15°C

c. Free space vacuum

d. Static acceleration 14g maximum

e. Vibration:

1. 15g rms noise maximum
2. 4.5g rms noise and 4.5g sinusoid (1500 cps maximum) maximum

6.0 Interface Characteristics

6.1 The signal characteristics of each boundary in paragraph 4.1 is described in table 6.1-1.

6.2 Power Requirements

The power requirements for the command subsystem are given in table 6.2-1.

Table 6.1-1

SIGNAL	CONDITION	AMPLITUDE	DURATION	IMPEDANCE	FREQUENCY
DETECTOR SIGNALS					
Subcarrier into detector	On	$1.0^{+0.2}_{-0.8}$ V rms	Continuous	2.8±0.2K(Det. Input)	f_{One} or f_{Zero}
AGC	On	3±0.5V	Continuous	30±10K(Det. Input)	NA
25 pps (from CC&S)	On	5.5±0.8V	1 ±0.3 ms	1±0.05K(Det. Input)	25 pps
Limiter Amplifier	Saturated	1.8 ±0.3V_{p-p}	NA	NA	f_{Zero}
Envelope Detector	One Zero	+2.9±0.2V -0.9±0.2V	Rise & fall times ≤ 200 m sec	NA	NA
Schmitt Trigger 1	One Zero	>4.0V <0.4V	NA	NA	NA
Schmitt Trigger 2	One Zero	>4.0V <0.4V	NA	NA	NA
Flip-flop 1	One Zero	>4.0V <0.4V	NA	NA	NA
Flip-flop 2	One Zero	>4.0V <0.4V	NA	NA	NA

(Continued)

Table 6.1-1 (Continued)

SIGNAL	CONDITION	AMPLITUDE	DURATION	IMPEDANCE	FREQUENCY
DETECTOR-DECODER SIGNALS					
Command Word Input	One Zero	>2.0V <0.4V	NA	>8.2K(Dec. Input)	1 Bit/Sec
Bit Sync (Decoder Input)	On Off	>2.0V <0.4V	40±4 ms with rise time <10μ sec.	≈1K (Dec. Input) 47K	1 pps
Inhibit-dump	On Off	>2.0V <0.4V	NA	12K (Dec. Input) 12K	NA

(Continued)

Table 6.1-1 (Contined)

SIGNALS DECODER SIGNALS	CONDITION	AMPLITUDE	DURATION	IMPEDANCE	FREQUENCY
Alert Pulse	On Off	NA NA	1±0.1 sec NA	0 ∞	NA NA
Real-time Command Relay	On Off	NA NA	150±50 ms NA	0 ∞	NA NA
Stored Command Sync Pulse	On Off	<0.2V ≥12 V	10±5 ms Fall time ≤1μ sec Rise time ≤375μ sec.	<200 Ω >1 MΩ	1 pps
Stored Command	One Zero	NA NA	NA NA	0 ∞	NA NA
Shift Pulse	On Off	<0.4V >5.0V	30±10ms NA	<200 NA	1 pps
Alert Pulse Drive	On Off	>4.0V <0.4V	1±0.1 sec NA	NA NA	NA NA
Matrix Supply Pulse	On Off	>5.0V < 0.2V	150±50 ms NA	NA NA	NA NA
Schmitt Trigger (Decoder)	One Zero	>4.0V <0.4V	NA NA	NA NA	NA NA
Flip-flop 1 (Decoder)	One Zero	>3.2V <0.4V	NA NA	NA NA	NA NA
Flip-flop 2 (Decoder)	One Zero	>4.0V <0.4V	NA NA	NA NA	NA NA
Relay Drivers	On Off	<1.0V >27.7V	150±50 ms NA	NA NA	NA NA

(Continued)

Table 6.1-1 (Continued)

SIGNAL	CONDITION	AMPLITUDE	DURATION	IMPEDANCE	FREQUENCY
SIGNALS TO GSE					
Alert Pulse	On Off	6V 0V	1±0.1 Sec NA	NA NA	NA NA
Real-Time Command	On Off	6V 0V	150±50 ms NA	NA NA	NA NA
Stored Command	On Off	>4V 0V	NA NA	NA NA	NA NA

Table 6.2-1

SUPPLY	TOLERANCE	NORMAL CURRENT	MAX RIPPLE	MAX NOISE	REMARKS
+28 Vdc (Detector)	±10%	55 ma	800 mv p-p	800 mv p-p	The power supply for the command system is designed to cut out if any load current or combination of load currents is excessive enough to cause the input current to the converter to exceed approximately 50 percent of its normal value.
+28 Vdc (Decoder)	±10%	Avg. Load < 1 ma Peak ≈ 45 ma			
+6Vdc	±5%	110 ma	300 mv p-p	300 mv p-p	
-6Vdc	±5%	25 ma	300 mv p-p	300 mv p-p	

(Insert in Spacecraft Design Specification Book)

APPROVED

SYSTEM: M. R. Mesnard

SUBSYSTEM: [illegible]

SUBSYSTEM: [illegible]

JET PROPULSION LABORATORY

Spec. No. RL-4-323
12 February 1962

FUNCTIONAL SPECIFICATION
RA-8 AND RA-9 RANGER SPACECRAFT
S-BAND TURNABOUT RANGING TRANSPONDER SUBSYSTEM

1. SCOPE

1.1 This specification covers the functional requirements for the Ranger Spacecraft S-Band Turnabout Ranging Transponder Advanced Development Experiment that is required to perform the following:

a. Demodulate the RF signal transmitted to the spacecraft by the DSIF.

b. Coherently translate the frequency of the received RF signal to the frequency of the transmitted RF signal.

c. Modulate the transmitted RF signal with the demodulated ranging signal.

2. APPLICABLE DOCUMENTS

2.1 The following documents form a part of this specification:

SPECIFICATIONS

Jet Propulsion Laboratory

	Ranger Spacecraft Design Specification Book
30201	Spacecraft Environmental Specification, Assembly Level Type Approval and Unit Acceptance Test Requirements

JPL 14-072

3. DESCRIPTION

3.1 General

The subsystem shall consist of an S-Band Transponder arranged to detect the incoming RF signal which is modulated with a pseudo-noise range code and transmit an RF signal modulated with this detected code. The transponder shall utilize the L-band directional antenna having a broad-band feed, connecting to the L-band system by means of a band separator.

3.1.1 Block Diagram

Figure 1 shows a detailed block diagram of the S-Band Turnabout Ranging Transponder Subsystem.

3.1.2 Subsystem Elements

a. Transponder

b. Diplexer

c. Isolator and Power Monitor

3.2 Transponder

The transponder shall consist of an extremely narrow-band, double superheterodyne, automatic phase tracking receiver operating at S-band, with nominal receiving frequency of 2,113 mc and transmitting frequency of 2,295 mc. The transponder shall be completely transistorized. A separate wide-band data loop detects the range coded signal. The transponder shall have two modes of operation, either noncoherent or coherent. The noncoherent mode shall be used when the transponder is not receiving a signal from earth. Under this condition, the transmitter shall be driven from a crystal oscillator and provide a stable signal source for earth acquisition. The coherent mode is selected automatically whenever the transponder receiver locks to an incoming signal. A transfer switch, which is controlled by the coherent AGC system, shall bias-off the crystal oscillator and at the same time switch the VCO output signal to the transmitter multiplier chain. The coherent mode shall provide a completely coherent system whereby the phase and frequency of the transmitted signal are integrally related to that of the received signal by the ratio 240/221. To provide this coherent mode of operation the ground receiver frequency shall be slowly varied until it acquires the transponder transmitted signal. Once the ground receiver is locked, the operator shall transmit an earth-to-space signal which shall be varied slowly in frequency about the expected transponder receiver lock-on frequency. Upon acquisition, an AGC voltage is generated in the transponder which in turn switches the transponder transmission mode from fixed oscillator to coherent VCO operation. This transition results in a transmitter frequency shift and may require reacquisition by the ground receiver.

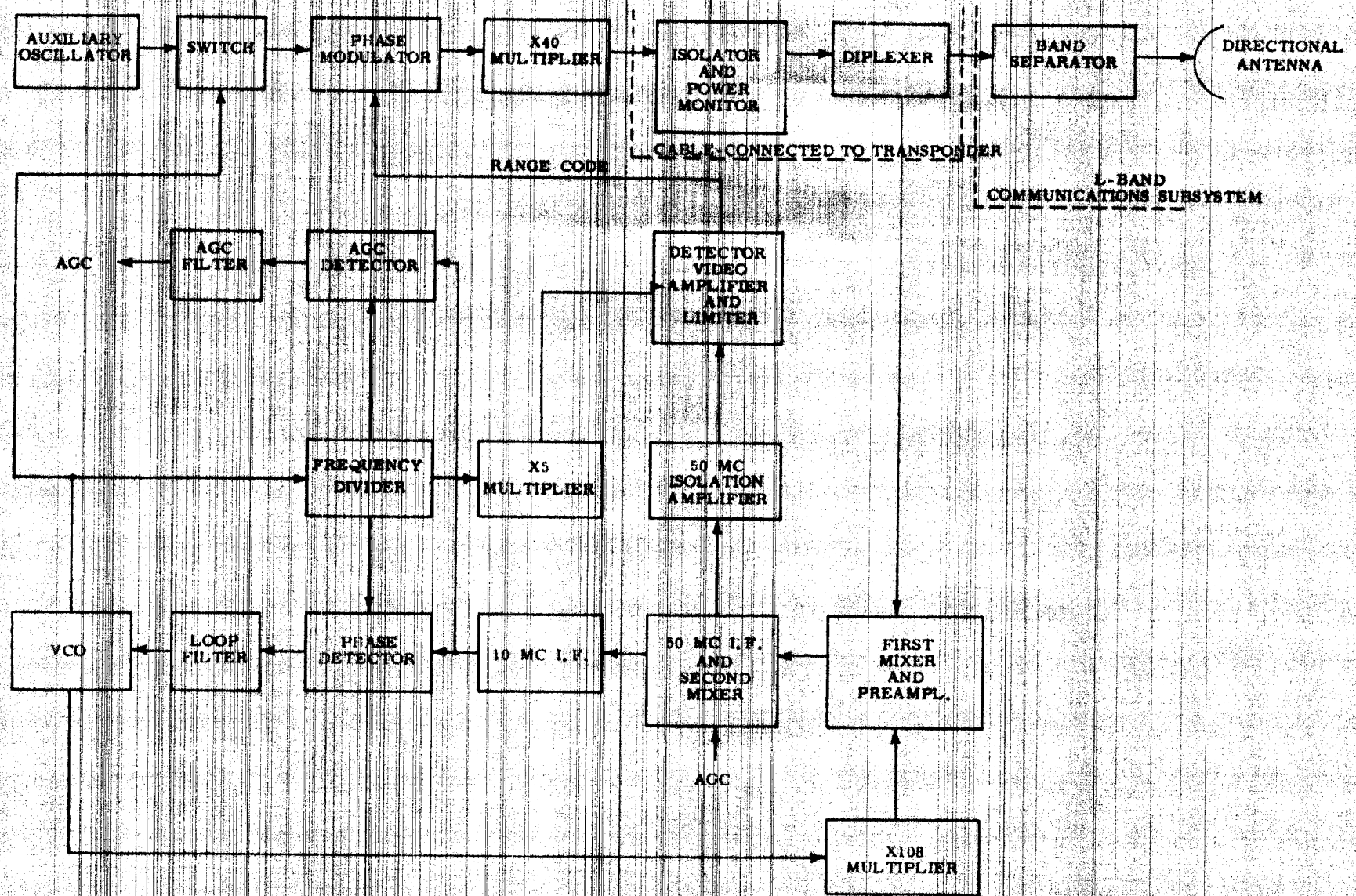

Figure 1. Spacecraft S-Band Transponder Subsystem

3.3 Diplexer

The diplexer permits the use of the directional antenna for both the transponder transmitter and receiver.

3.4 Isolator and Power Monitor

The isolator permits accurate transmitter power monitoring in case of a mismatch on the transmitter line and also protects the X40 multiplier output cavity from any reflected signal due to a mismatch.

4. BOUNDARIES AND PARAMETERS

4.1 General Design Boundaries

The spacecraft transmitter design shall be compatible with the launch-to-injection ground receivers used at Cape Canaveral, with the mobile vehicle tracking station to be set up in South Africa, and with the Deep Space Instrumentation Facilities at Goldstone, Johannesburg, and Woomera. The spacecraft receiver design is compatible with the Goldstone 10 KW transmitter, and with the transmitter in the Launch Checkout RF Trailer.

4.1.1 Boundaries

The boundary lines between the radio subsystem and the adjoining subsystems are as follows:

a. Transponder subsystem and telemetry subsystem

b. Transponder subsystem and the ground support equipment

c. Transponder subsystem and power subsystem

4.2 Parameters

4.2.1 Transponder

a. Frequencies:

1. Receiver 2113.3125 mc plus/minus 0.003 percent
2. Transmitter 2295.000 mc plus/minus 0.003 percent

b. Power Output:

The power output of the transponder transmitter shall be +8 dbm minimum.

c. Noise Figure:

The noise figure shall be no greater than 11 db with an image rejection preselector having a loss no greater than 1 db.

d. Effective Receiver Noise Bandwidth:

The effective receiver noise bandwidth shall be 20 cps at threshold.

e. Threshold:

Threshold signal level shall be -150 dbm at the diplexer input terminal or -151 dbm at the mixer input terminal. The diplexer shall contain an image rejection preselector having an insertion loss no greater than 1 db. The threshold signal level is defined as the signal level at which the RF phase error at the receiver output, due to receiver noise, is 1 radian rms.

f. Bandwidth:

The over-all bandwidth of the transponder shall be down no more than 3 db at 3 mc.

g. Modulation Index:

The modulation index is variable from 0 to 4 radians.

h. Total Power Consumption:

With nominal input voltages, the maximum total power consumption shall be 8.0 watts at the output of the power converter.

1. +15 volts at 300 milliamperes
2. -15 volts at 230 milliamperes

i. Weight:

The maximum weight of the transponder subsystem shall be as indicated in the Design Parameter and Reference Designation Functional Specification, RL-4-120.

j. Volume:

The maximum volume of the transponder, diplexer, shielded isolator, and power converter shall be 727.2 cubic inches, as itemized below:

1.	Transponder	521.0
2.	Diplexer	56.2
3.	Shielded Isolator	75.0
4.	Power Converter	75.0
	Total	727.2

k. Environment:

The transponder shall operate with normal input voltages and output power level in a space environment which extends over a temperature range of -10° C to +70° C. It shall also perform in the vibration environment and pressure reduction conditions which are encountered through the critical pressure region of its ascent on the Atlas-Agena B vehicle. To ensure satisfactory performance under these conditions, the transponder shall operate under the requirements of JPL Specification 30201.

l. Phase Stability:

The phase stability of the unmodulated carrier shall be such as to cause not more than 6 degrees peak phase error in a noise-free, phase-coherent receiver, having a loop noise bandwidth of 20 cps. During vibration tests the additional phase error above residual shall not exceed 3 degrees peak per g rms.

m. Phase Error:

The static phase error at threshold shall not exceed 6 degrees at signal frequencies displaced plus/minus 4.7 parts in 10^7 from the design signal frequency. At these extremes the threshold will be reduced 1 db from that specified at the design signal frequency. The static phase error at strong signal levels (α = 1) shall not exceed 8.2° at signal frequencies displaced plus/minus 1.3 parts in 10^5 from the design frequency. The phase error at threshold shall not exceed 6° for a maximum rate of change of 2.8 parts in 10^9 per second^2 in input signal. The phase error at strong signals (α = 1) shall not exceed 30° for a maximum rate of change of 1.9 parts in 10^7 per second^2 in input signal frequency.

5. INTERFACE CHARACTERISTICS

The characteristics of the signal at the boundaries between the transponder subsystem and the adjoining subsystems are shown in tables I and II.

Table I

Interface	Level Volts	Impedance Ohms	Signal Waveform	Frequency cps or Spectrum	Tolerance
1. Radio subsystem and ground support equipment.					
Test Points					
AGC	-1.5 to +5.5 dc	10 K	DC	DC	Direct Measurement
Static Phase Error	±2.5 dc	470 K	DC	DC	Direct Measurement
Dynamic Phase Error		10 K	Sinewave + Noise	0 to 1500 cps	Direct Measurement
Power Output S-Band Transmitter	0 to +100 mv	10 K	DC	DC	Direct Measurement
L.O. Drive					
S-Band Receiver	0 to 100 mv	100	DC	DC	Direct Measurement

Table II

Interface	Voltage Volts	Current Drain ma	Regulation	Ripple p-p	Spikes mv max.	Load Characteristics
Radio Subsystem and Power Subsystem						
Transponder	+15	300	5 %	0.5 %	50 p-p	Constant
	-15	230	5 %	0.5 %	50 p-p	Constant

(Insert in Spacecraft Design Specification Book) APPROVED:

System: M. R. Mesnard

Subsystem: A. R. Lange

Subsystem: [illegible]

JET PROPULSION LABORATORY

Spec. No. RL-4-331

20 March 1962

FUNCTIONAL SPECIFICATION
RANGER RA6 THRU RA9 SPACECRAFT
GROUND COMMAND SUBSYSTEM (RWV)

1.0 SCOPE

1.1 This specification covers the functional requirements for the Ranger RA6 through RA9, Ground Command Subsystem (Read-Write-Verify), including the functions required at designated deep space stations of the DSIF to accept commands from the ground communications subsystem of the DSIF and encode them for radio transmission to the spacecraft.

1.2 This specification does not cover any associated radio transmitter, modulating amplifier, or on-board spacecraft radio receivers, demodulators or decoders.

1.3 The subsystem reads the incoming information, verifies through redundancy that the information is correct, transforms the data into a form suitable for transmission, reads the transmitted signal and verifies its correctness or incorrectness, and writes by means of punched paper tape, the transmitted command.

JPL 14-072

2.0 APPLICABLE DOCUMENTS

2.1 The following documents form a part of this specification:

SPECIFICATIONS

Jet Propulsion Laboratory

30235	Design Specification, RA345, Command Functional Unit, Pseudo - Noise Code and Subcarrier Frequencies (Classified)
	Spacecraft Design Specification Book, Ranger RA-6 through RA-9

DRAWINGS

Jet Propulsion Laboratory

B-105651	Overall Block and Signal Flow Diagrams, RWV, RA345 (27 sheets)
A-105670	Data Scanner, Model 1155, Modification
B-3158178	Diagram, Schematic, Wiring, Binary Scaler, Ranger 345
B-3158181	Diagram, Schematic, Wiring, Set-Reset Flip-Flop Ranger 345
J-3158258	Diagram, Schematic, Wiring, Digital Command Detector, (3A1) Ranger 345

Applied Development Corporation

3-207-000	FSK Command Modulator, Logic Diagram
3-207-008	Power Supply, FSK Command Modulator
1-401-099	One Shot
1-606A-199	Amplifier and Driver
1-1011-000	Ripple Counter
1-3038-61	Schematic, Dual Amplifier
1-5011-009	BCD Counter, Model 5
1-6010-619	FSK Command Modulator and Amplifier Card
1-7021-61	FSK Command Modulator, Special No. 1

INSTRUCTION MANUALS

a. Read-Write-Verify System - Model 1133 - Ransom Research, Inc.

b. Data Scanner - Model 1155 - Ransom Research, Inc.

c. Tape Reader - Model 424 - Tally Register Corp.

d. Tape Punch - Model 420 - Tally Register Corp.

e. Telemetry Check-out Receiver - Leach Corp.

f. Oscilloscope - Model 321 - Tektronix, Inc.

g. Audio Oscillator - Model 9092 - Burr-Brown

h. Power Supply - Model 721A - Hewlett-Packard

i. Time Code Generator - Model 6199 - Epsco-West Co.

3.0 DESCRIPTION

3.1 General

3.1.1 Block Diagram

A block diagram of the subsystem is shown in figure 3.1.1-1.

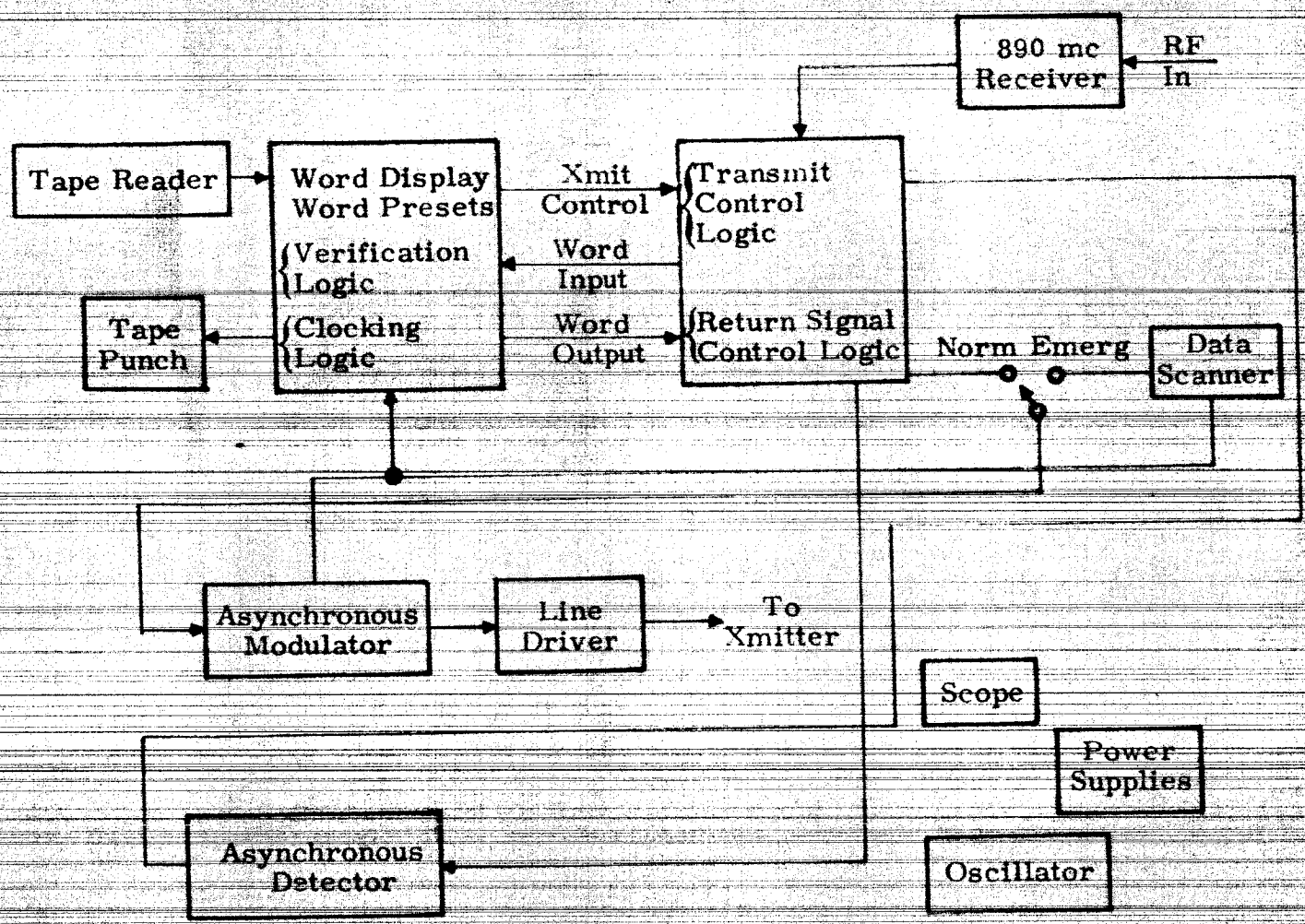

Figure 3.1.1-1

3.1.2 Required Functions

a. Verification of Incoming Command Data

Verification of an incoming command shall be accomplished by accepting a paper tape which has three identical command words punched on it, making an electronic comparison and a digital display, and indicating the existence or non-existence of an error. In the event of an error a request can be made by the operator for a retransmission.

b. Verification of Ground Encoding Electronics

A sample or test word is inserted in the system, and information bits are clocked out to the asynchronous modulator. This signal is directly demodulated, and electronically compared with the inserted word. In the event of a disagreement, an error indication shall be made.

c. Transmission to Transmitter Modulator

When it is desired to actually transmit command data, a gate shall be closed to the transmitter modulator, and information bits clocked to it. The process described in b. above shall be repeated automatically for each command word. In case an error occurs, the transmission shall be automatically inhibited.

d. Verification of Transmitted Signal

A probe shall sample energy from the transmitting antenna, and a receiver detects the signal. The receiver output shall be demodulated and compared with the word as stored. Should there have been an error, transmission shall be inhibited.

e. Record of Transmitted Command

The signal as received from the antenna probe is punched (written) on paper tape in the same form as the original command word (for record purposes).

3.2 Operational

3.2.1 Modes of Operation

a. Test Mode - Built-in test words of all ones and all zeros are provided.

b. Mode 1 - In this mode, the RWV subsystem compares three identical words as received from the teletype line termination. The capability is also present to prepare a punched tape for future use.

c. Mode 2 - In this mode, verification of the asynchronous modulator operation is made. A submode (transmit) allows transferral of the command data to the transmitter modulator.

d. Emergency Operation - A self contained (including power supply) unit (the Data Scanner) receives manually set-in data by means of rotary switches, and will do no more than clock out in serial form, the command bits to the asynchronous electronics.

3.2.2 Other Features

a. Indications and Controls - Indications of all modes and conditions of operation shall be made both locally and remotely, except that digital word displays and set-in information shall be only made locally. Remote controls include "Manual Initiate" and "Transmit Inhibit Override".

b. Automatic Initiate - When the system is fed time of day code from the time code generator, it shall be possible to start the transmission of a word or a series of words at any given time of day.

c. Between-word Delay - When a series of words are being sent, it shall be possible to vary the delay between words from 20 to 119 seconds, for a total of seven words.

d. Independent Check - An independent check of antenna radiated power shall be provided on the receiver signal strength meter.

e. Parity Check - Parity check bits shall be provided in the tape format.

3.2.2.1 Local Indications: Drawer 1

a. Power on - Indicator and Control

b. Manual Perforate - Indicator and Control

c. Transmit Inhibit Override - Indicator and Control

d. Error - Indicator and Control

e. Transmit Inhibit - Indicator and Control

f. Ground Synchronization Manual - Indicator

g. Ground Synchronization Override - Indicator and Control

h. Vehicle Synchronization On - Indicator

i. Ground Synchronization On - Indicator

j. Verify - Indicator

k. Transmit - Indicator and Control

l. Initiate - Control

m. System In Process - Indicator

n. Manual Initiate - Indicator and Control

o. Auto Initiate - Indicator and Control

p. Test 1. - Indicator and Control

q. Test 0. - Indicator and Control

r. Mode 1. - Indicator and Control

s. Mode 2. - Indicator and Control

3.2.2.2 Remote Indication

a. Transmit Inhibit Over-ride - Indicator and Control

b. Error - Indicator

c. Transmit Inhibit - Indicator

d. Vehicle Synchronization On - Indicator

e. Ground Synchronization - Indicator

f. Verify - Indicator

g. Transmit - Indicator

h. Initiate - Control

i. System In Process - Indicator

j. Manual Initiate - Indicator

k. Auto Initiate - Indicator

3.2.2.3 Local Inputs - Drawer 2

a. Manual Perforate - Address, date and polarity

b. Auto Initiate - Hour, minutes and seconds

c. Word Stop - Number of words in a string up to 7

d. Interword Time Delay - 1 to 99 seconds

3.2.2.4 Miscellaneous Inputs and Indications

Associated equipment controls (scope, oscillator receiver, punch
* "buzz switch", data scanner controls for emergency operation.)
Key lock (prevents any transmission unless turned "on").

3.3 Operating Sequence

3.3.1 In practice, three identical words are received via teletype line paper tape termination. This tape is hand carried to the RWV system (which has been previously turned on and self-checked and loaded on the tape reader. The system is in Mode 1, and the initiate button depressed. The three words are read, displayed, and compared electronically. In the event of an error, a request is made for retransmission from the originating station and the process repeated. This word is now read for transmission, and may be transmitted by reloading the tape, setting the word stop to 1, switching over to mode 2, turning "on" the key lock, and depressing the initiate button.

Had it been desired to send a series of words, the punch would have been operated once for each unique word, so that a tape would have been generated containing only serial unique words instead of three of a kind. The locally generated tape would have been loaded on the reader, a decision made as to the time delay desired, the "word stop" set for the total number of words, and the system initiated either manually or automatically. At the end of each transmission, a punched tape is automatically made of the word or words sent, as picked up by the antenna probe.

3.4 Digital Display

3.4.1 Three display lines are used in double purpose fashion. Lines A, B, and C as used in mode 1 display each of the three identical redundant words as read from the teletype tape. In mode 2, line A shows the word as read, line B, the word as checked through the asynchronous electronics, and line C as received from the transmitting antenna probe. To avoid having to display each bit of the command word, octal code is used. The table 3.4-1 shows the english language address designation, the address in binary, and the octal presentation. Examples of the decimal equivalent for the CC&S magnitude and octal presentation are also given.

4.0 BOUNDARIES AND PARAMETERS

4.1 Inputs to System

4.1.1 Auto-Initiate

Both the "true" and false outputs from the time code generator are required for the system to start automatically at a given time.

* Buzz switch provides extra leader length on the output tape.

4.1.2 Receiver Input

In order to write a tape corresponding to the word as actually transmitted a probe is mounted on the antenna, and rf energy fed back to the system.

4.1.3 Tape Input

Command word information is read in by means of punched paper tape.

4.1.4 Power

Power required is 105 to 125V ac, 55 to 65 cps.

4.2 Outputs from System

4.2.1 Command Word

The command word or words are fed to the transmitter modulator in binary form.

4.2.2 Tape Output

All transmitted words are automatically punched on paper tape for record keeping. Prepunched tapes may be made for future use.

4.3 Parameters

4.3.1 Command Rate

The command rate is one bit per second.

4.3.2 Word Format

See figure 4.3-1.

1 Bit Word Start	5 Bit Address	11 Bit Magnitude Information	1 Bit Polarity 1 = + 0 = -	Total 18 bits/word

Figure 4.3-1

5.0 CONSTRAINTS

5.1 Number of Commands

The maximum number of words which can be sent in a single operation with automatic word stop is 7. Any number of words may be sent if a manual stop is used.

5.2 Lead Time

When a single word is to be transmitted a lead time of 20 seconds is required in mode 2 for tape reading, display and automatic verification. Actual lead time is 19-2/3 seconds plus some random amount up to 59/60 second, an ambiguity introduced by the difference in phase between the clock rate of transmission and the line frequency used to operate the tape reader.

5.3 Interword Time Delay

When more than one word is to be sent in sequence, a time delay which is variable from one to 99 seconds is inserted, resulting in a total interword time delay of from 21 to 119 seconds.

5.4 Check-out Time

When the system is first turned on, a period of two minutes is required for self clearing of the interword time delay circuitry. An additional delay of approximately 3 minutes will be required for operational checks.

5.5 Auto-Initiate

The time of starting the RWV system is controlled to no closer than ± 1 millisecond of the time set in by the time code generator.

6.0 INTERFACE CHARACTERISTICS

6.1 Inputs to Systems

6.1.1 Auto Initiate

Voltage levels and impedances are compatible with the Epsco-West Model 6190, Time Code Generator.

6.1.2 Receiver Input

Antenna input impedance is 50 ohms. A signal level as low as -50 dbm is satisfactory.

6.1.3 Tape Input

See figure 6.1-1.

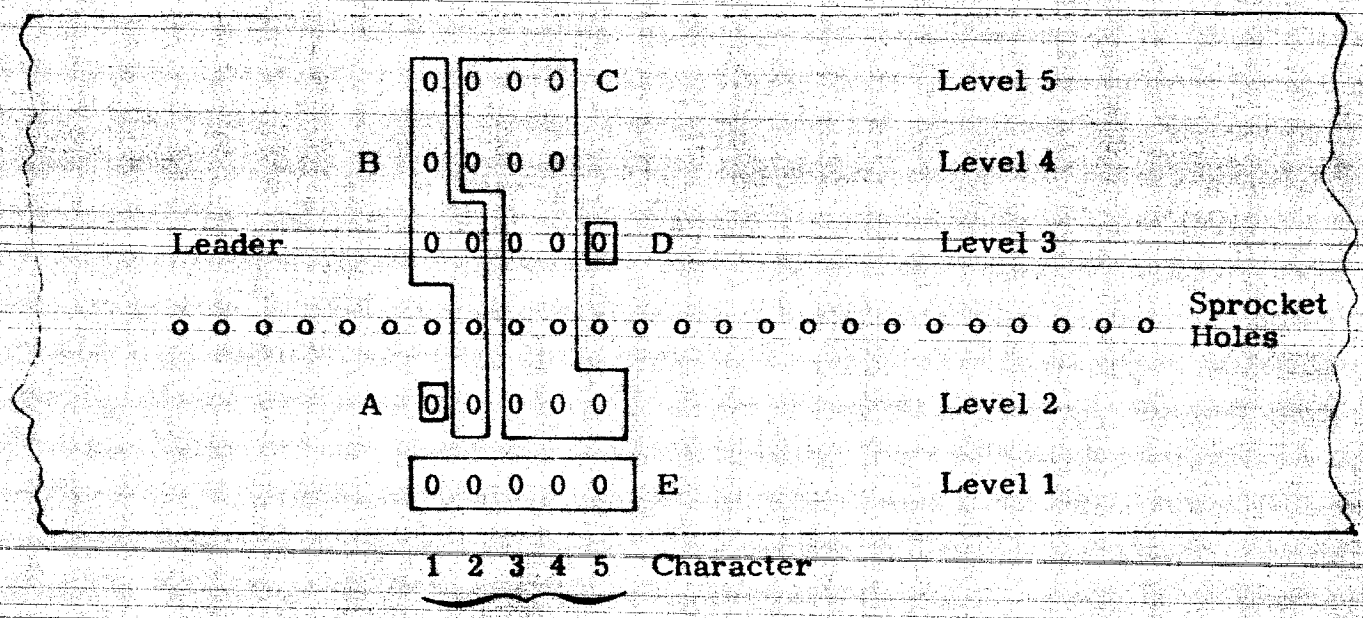

Figure 6.1-1

A	-	Start Bit	1 bit
B	-	Address	5 bits
C	-	Information	11 bits
D	-	Polarity	1 bit (binary 1 is plus; binary 0 is minus)
E	-	Parity	5 bits

6.1.4 Power

Power required is no more than 400 watts at 117 volts 60 cycles per second. The voltage may vary from 105 to 125 volts and frequency from 55 to 65 cps.

Command Conversions - RA345

Table 3.4-1

RWV PRESENTATION ADDRESS	BINARY ADDRESS	ADDRESS
35	11101	SC-2 Midc. Man. Pitch Duration
33	11011	SC-6 Term. Man. 2nd Pitch Duration
32	11010	RTC-3 Ant. Switchover
26	10110	RTC-4 Midc. Man. Start
25	10101	SC-1, Midc. Man. Roll Duration
24	10100	RTC-2, Ant. Hinge Angle Override
23	10011	SC-4 Ter. Man. 1st Pitch Duration
22	10010	RTC-5, Telem. Mode Change
16	01110	RTC-7, Altimeter Power On
13	01011	SC-5, Term. Man. Yaw Duration
12	01010	RTC-1, Roll Override
5	00101	RTC-6, Term. Man. Start
3	00011	SC-3, Midc. Man. Velocity Increment
0	00000	RTC-0, Clear Command

MAGNITUDE	MAGNITUDE	DECIMAL MAGNITUDE
3777	11111111111	2047
3776	11111111110	2046
3774	11111111100	2045
3770	11111111000	2044
3760	11111110000	2043
3740	11111100000	2042
3700	11111000000	2041
3600	11110000000	2040
3400	11100000000	2039
3000	11000000000	2038
2001	10000000001	2037
0003	00000000011	2036
	Etc.	Etc.

6.2 Outputs from System

6.2.1 Command Word

The output voltage is variable from 0 to 2.5 volts peak. The output impedance is 20 ohms. Frequencies are classified. (See JPL Specification 30235).

6.2.2 Tape Output

The tape output is identical in format to the tape format required at the input. Parity bits are internally generated and punched. Successive words are automatically spaced by five character places.

(Insert in Spacecraft Design Specification Book)

APPROVED:

System: M. R. Mesnard

Subsystem: J. F. Koukol

Subsystem: A. Wiltsey

JET PROPULSION LABORATORY

Spec. No. RL-4-380
25 January 1962

SUPERSEDES:
RL-4-310
28 November 1961

P-53 (RA-6) SPACECRAFT
TELEMETERING CHANNEL ASSIGNMENTS

1.0 SCOPE

This specification contains the JPL telemetering channel assignments for the Ranger RA-6 (P-53) spacecraft mission.

JPL TELEMETERING CHANNEL ASSIGNMENT

PROJECT RANGER P-53
SYSTEM ATTITUDE CONTROL

CHANNEL	MEASUREMENTS	MEASUREMENT RANGE	DATA ENCODER INPUT RANGE	COMBINED ACCURACY OF DATA ENCODER & DATA REDUCTION	SAMPLE RATE SEC/SAMPLE
5-A-2	YAW GYRO TORQUE	±0.4°/SEC	±5.8 VDC	15%*	0.2
5-A-3	ROLL GYRO TORQUE	±0.4°/SEC	±5.8 VDC	15%*	0.2
5-A-4	PITCH GYRO TORQUE	±0.4°/SEC	±5.8 VDC	15%*	0.2
2-C-0	ROLL POSITION (EARTH SENSOR)	±2.5°	±20 VDC	5%	10
2-C-1	HINGE EARTH SENSOR OUT	±2.5°	±20 VDC	5%	10
2-C-2	PITCH SWITCHING AMPLIFIER OUTPUT	POLARITY	0VDC +12.5 VDC -12.5 VDC	5%	10
2-C-3	YAW SWITCHING AMPLIFIER OUTPUT	POLARITY	0VDC +12.5 VDC -12.5 VDC	5%	10
2-C-4	YAW RATE GYRO (COARSE)	±1500°/HR	±20 VDC	5%	10
2-C-5	PITCH RATE GYRO (FINE)	±62°/HR	±0.83 VDC	5%	10
2-C-6	YAW RATE GYRO (FINE)	±62°/HR	±0.83 VDC	5%	10
2-C-7	ROLL RATE GYRO (FINE)	±62°/HR	±0.83 VDC	5%	10
2-C-8	EARTH SENSOR LIGHT INTENSITY	0.01 TO 17 FT-CANDLES	0 TO -0.5VDC	5%	10
2-D-1	-Y YAW JET VANE ACTUATOR TEMP.	0 TO +500°F	±0.25 VDC	5%	10
6-B-0	+Y YAW JET VANE ANGLE	±25°	±13.3VDC	15%*	0.8
6-B-1	-Y YAW JET VANE ANGLE	±25°	±13.3VDC	15%*	0.2

* DUE TO NOISE ERROR AT THRESHOLD DURING MIDCOURSE

JPL 0309.1 DEC 60

CHANNEL	MODE 1		MODE 2		MODE 3		MODE 4		MODE 5		COGNIZANT ENGINEER
	Threshold Distance		Threshold Distance		Threshold Distance		Threshold Distance		Threshold Distance		
	Beacon	Transponder	Beacon	Transponder	Beacon	Transponder	Beacon	Transponder	Beacon	Transponder	
5-A-2		X		X		X		X			HILL
5-A-3		X		X		X		X			HILL
5-A-4		X		X		X		X			HILL
2-C-0		X		-		X		X			HILL
2-C-1		X		-		X		X			MEISENHOLDER
2-C-2		X		-		X		X			HILL
2-C-3		X		-		X		X			HILL
2-C-4		X		-		X		X			HILL
2-C-5		X		-		X		X			HILL
2-C-6		X		-		X		X			HILL
2-C-7		X		-		X		X			HILL
2-C-8		X		-		X		X			MEISENHOLDER
2-D-1		-		X		-		-			GOULD
6-B-0		-		X		-		-			HILL
6-B-1		-		X		-		-			HILL

NOTE: AN X INDICATES THE MEASUREMENT IS BEING MADE.

JPL 0309-2 DEC 60

JPL TELEMETERING CHANNEL ASSIGNMENT

PROJECT RANGER P-53
SYSTEM ATTITUDE CONTROL

CHANNEL	MEASUREMENTS	MEASUREMENT RANGE	DATA ENCODER INPUT RANGE	COMBINED ACCURACY OF DATA ENCODER & DATA REDUCTION	SAMPLE RATE SEC/SAMPLE
6-B-2	+X PITCH JET VANE ANGLE	±25°	±13.3 VDC	15%*	0.2
6-B-3	-X PITCH JET VANE ANGLE	±25°	±13.3 VDC	15%*	0.2
3-D-1	PITCH RATE GYRO (COARSE)	±1500°/HR	±20 VDC	5%	10
3-D-3	PITCH SUNSENSOR OUT	±0.9°	±18 VDC	5%	10
3-D-4	YAW SUNSENSOR OUT	±0.9°	±18 VDC	5%	10
3-D-6	ANTENNA HINGE ANGLE	0 TO 180°	+0.33 TO +5.33 VDC	5%	10
3-D-7	ROLL RATE GYRO (COARSE)	±1500°/HR	±20 VDC	5%	10
3-F-8	A/C NITROGEN TANK PRESSURE	0 TO 3500 PSIA	±6 VDC	5%	100
2-G-5	A/C NITROGEN TANK TEMP.	-25°F TO +165°F	±0.125 VDC	5%	100
4-H-2	+Y YAW JET VANE ACTUATOR TEMP.	0°F TO +500°F	0 TO +0.5 VDC	5%	1000
4-J-0	EARTH SENSOR TEMPERATURE	±100°F	0 TO -0.2 VDC	5%	1000
4-J-1	+Y PITCH (7A13) SUN SENSOR TEMP.	+14 TO +140°F	0 TO -0.2 VDC	5%	1000
4-J-2	-Y PITCH (7A11) SUN SENSOR TEMP.	+14 TO +140°F	0 TO -0.2 VDC	5%	1000
4-J-9	DIFFERENTIAL (7A10 MINUS 7A12) SUN SENSOR TEMP.	±36°F IN -31 TO +95°F	0 TO -0.2 VDC	5%	1000

* DUE TO NOISE ERROR AT THRESHOLD DURING MIDCOURSE

JPL 0309-1 DEC 60

CHANNEL	MODE 1		MODE 2		MODE 3		MODE 4		MODE 5		COGNIZANT ENGINEER
	Threshold Distance		Threshold Distance		Threshold Distance		Threshold Distance		Threshold Distance		
	Beacon	Transponder	Beacon	Transponder	Beacon	Transponder	Beacon	Transponder	Beacon	Transponder	
5-B-2		-		X		-		-			HILL
6-B-3		-		X		-		-			HILL
3-D-1		X		X		X		X			HILL
3-D-3		X		X		X		X			MEISENHOLDER
3-D-4		X		X		X		X			MEISENHOLDER
3-D-6		X		X		X		X			HILL
3-D-7		X		X		X		X			HILL
3-F-8		X		X		X		X			DAHLGREN
2-G-5		X		-		X		X			DAHLGREN
4-H-1		X		X		X		X			GOULD
4-J-0		X		X		X		X			MEISENHOLDER
4-J-1		X		X		X		X			MEISENHOLDER
4-J-2		X		X		X		X			MEISENHOLDER
4-J-9		X		X		X		X			MEISENHOLDER

NOTE: AN X INDICATES THE MEASUREMENT IS BEING MADE

JPL 0309-2 DEC 60

JPL TELEMETERING CHANNEL ASSIGNMENT

PROJECT RANGER P-53
SYSTEM CC & S

CHANNEL	MEASUREMENTS	MEASUREMENT RANGE	DATA ENCODER INPUT RANGE	COMBINED ACCURACY OF DATA ENCODER & DATA REDUCTION	SAMPLE RATE SEC/SAMPLE
1	400 C.P.S.	400±1 CPS	6 V PULSES 400±1 PPS		CONT.
B-2-1	CC & S PROGRAM	EVENT	+ 6 V PULSE	3 SEC.	CONT.
8	MID-COURSE ACCELERATION	0 TO 2±4 FT/SEC^2	0 TO 25 PPS +5 V PULSE		CONT.

JPL 0309-1 DEC 60

CHANNEL	MODE 1		MODE 2		MODE 3		MODE 4		MODE 5		COGNIZANT ENGINEER
	Threshold Distance		Threshold Distance		Threshold Distance		Threshold Distance		Threshold Distance		
	Beacon	Transponder	Beacon	Transponder	Beacon	Transponder	Beacon	Transponder	Beacon	Transponder	
1		X		X		X		X			ZAFMAN
B-2-1		X		X		X		X			ZAFMAN
8		-		X		-		-			MAND

NOTE: AN X INDICATES THE MEASUREMENT IS BEING MADE.

JPL 0309-2 DEC 60

JPL TELEMETERING CHANNEL ASSIGNMENT

PROJECT RANGER [illegible]
SYSTEM CENTRAL POWER

CHANNEL	MEASUREMENTS	MEASUREMENT RANGE	DATA ENCODER INPUT RANGE	COMBINED ACCURACY OF DATA ENCODER & DATA REDUCTION	SAMPLE RATE
3-D-8	POWER SYSTEM VOLTAGE	+16 TO +31 VDC	0 TO 5 VDC	5%	10
4-E-6	+X PANEL (4A9) AMPERES	0 TO 5 AMPS	0 TO 5 VDC	5%	100
4-E-7	-X PANEL (4A10) AMPERES	0 TO 5 AMPS	0 TO 5 VDC	5%	100
3-F-0	-X PANEL (4A10) VOLTS	20 TO 35 VDC	20 TO 35 VDC	5%	100
3-F-1	+X PANEL (4A9) VOLTS	20 TO 35 VDC	20 TO 35 VDC	5%	100
3-F-2	POWER CONVERTER A/C (4A3) VOLTS	0 TO 4.5 VDC	0 TO 5 VDC	5%	100
3-F-3	POWER INVERTER DATA ENCODER (4A7) VOLTS	0 TO 4.5 VDC	0 TO 5 VDC	5%	100
3-F-4	POWER CONVERTER COMMAND (4A5) VOLTS	0 TO 4.5 VDC	0 TO 5 VDC	5%	100
3-F-5	POWER INVERTER SCIENTIFIC (4A8) VOLTS	0 TO 4.5 VDC	0 TO 5 VDC	5%	100
3-F-7	POWER SYSTEM CURRENT	0 TO 10 AMPS	0 TO 5 VDC	5%	100
2-G-0	+X PANEL (4A9) FRONT TEMP.	+45°F TO +145°F	±0.125 VDC	5%	100
2-G-1	+X PANEL (4A9) BACK TEMP	+45°F TO +145°F	±0.125 VDC	5%	100
2-G-2	-X PANEL (4A10) FRONT TEMP.	+45°F TO +145°F	±0.125 VDC	5%	100
2-G-3	-X PANEL (4A10) BACK TEMP.	+45°F TO +145°F	±0.125 VDC	5%	100
2-G-8	SOLAR PANEL EXTENSION	EVENT	6 V STEP	5%	100
4-H-0	POWER BOOST REG. (4A2) TEMP.	0 TO 200°F	0 TO +0.5 VDC	5%	1000
4-H-1	POWER CONVERTER A/C (4A3) TEMP	0 TO 200°F	0 TO +0.5 VDC	5%	1000
4-H-4	POWER 400 CPS 1 PHASE INVERTER (4A13) VOLTS	0 TO 4.5 VDC	0 TO +5 VDC	5%	1000

JPL 0309-1 DEC 60

CHANNEL	MODE 1		MODE 2		MODE 3		MODE 4		MODE 5		COGNIZANT ENGINEER
	Threshold Distance		Threshold Distance		Threshold Distance		Threshold Distance		Threshold Distance		
	Beacon	Transponder	Beacon	Transponder	Beacon	Transponder	Beacon	Transponder	Beacon	Transponder	
3-D-8		X		X		X		X			SPENCER
4-E-6		X		X		X		X			CONOVER
4-E-7		X		X		X		X			CONOVER
3-F-0		X		X		X		X			CONOVER
3-F-1		X		X		X		X			CONOVER
3-F-2		X		X		X		X			SPENCER
3-F-3		X		X		X		X			SPENCER
3-F-4		X		X		X		X			SPENCER
3-F-5		X		X		X		X			SPENCER
3-F-7		X		X		X		X			SPENCER
2-G-0		X		-		X		X			CONOVER
2-G-1		X		-		X		X			CONOVER
2-G-2		X		-		X		X			CONOVER
2-G-3		X		-		X		X			CONOVER
2-G-8		X		-		X		X			MCPHERSON
4-H-0		X		X		X		X			SPENCER
4-H-1		X		X		X		X			SPENCER
4-H-4		X		X		X		X			SPENCER

NOTE: AN X INDICATES THE MEASUREMENT IS BEING MADE.

JPL 0309-2 DEC 60

JPL TELEMETERING CHANNEL ASSIGNMENT

PROJECT RANGER P-53
SYSTEM CENTRAL POWER

CHANNEL	MEASUREMENTS	MEASUREMENT RANGE	DATA ENCODER INPUT RANGE	COMBINED ACCURACY OF DATA ENCODER & DATA REDUCTION	SAMPLE RATE SEC/SAMPLE
4-H-5	POWER 400 CPS 3 PHASE INVERTER (4A14) VOLTS	0 TO 4.5 VDC	0 TO 5 VDC	5%	1000
4-H-6	SOLAR CELL SHORT CIRCUIT AMPERES	0 TO 0.2 AMPS	0 TO +0.5VDC	5%	1000
4-H-7	SOLAR CELL OPEN CIRCUIT VOLTAGE	0 TO 0.25VDC	0 TO 0.5VDC	5%	1000
4-J-4	BATTERY TEMPERATURE	+32 TO +158°F	0 TO -0.2VDC	5%	1000
4-J-6	POWER SWITCHING & LOGIC TEMP.	0 TO 200°F	0 TO -0.2VDC	5%	1000

JPL 0309-1 DEC 60

CHANNEL	MODE 1		MODE 2		MODE 3		MODE 4		MODE 5		COGNIZANT ENGINEER
	Threshold Distance		Threshold Distance		Threshold Distance		Threshold Distance		Threshold Distance		
	Beacon	Transponder	Beacon	Transponder	Beacon	Transponder	Beacon	Transponder	Beacon	Transponder	
4-H-5		X		X		X		X			SPENCER
4-H-6		X		X		X		X			CONOVER
4-H-7		X		X		X		X			CONOVER
4-J-4		X		X		X		X			BANES
4-J-6		X		X		X		X			SPENCER

NOTE: AN X INDICATES THE MEASUREMENT IS BEING MADE

JPL 0309-2 DEC 60

JPL TELEMETERING CHANNEL ASSIGNMENT

PROJECT RANGER P-53
SYSTEM COMMUNICATIONS

CHANNEL	MEASUREMENTS	MEASUREMENT RANGE	DATA ENCODER INPUT RANGE	COMBINED ACCURACY OF DATA ENCODER & DATA REDUCTION	SAMPLE RATE SEC/SAMPLE
3-D-0	RECEIVER AGC (COARSE)	-50 TO -140 DBM	+2 TO +5.75 VDC	5%	10
3-D-5	RECEIVER AGC (COARSE)	-50 TO -140 DBM	+2 TO +5.75 VDC	5%	10
3-D-2	RECEIVER PHASE ERROR (COARSE)	±2000 CPS	±1.5 VDC	5%	10
4-E-0	LO GAIN ANTENNA DRIVE	+10 TO +35 DBM	0 TO +0.5 VDC	5%	100
4-E-1	HIGH GAIN ANTENNA DRIVE	+10 TO +35 DBM	0 TO +0.5 VDC	5%	100
4-E-3	RECEIVER AGC (FINE)	-70 to -130 DBM	+4.0 to +5.0 VDC	5%	100
4-E-5	RECEIVER PHASE ERROR (FINE)	±200 CPS	+0.150 VDC	5%	100
4-H-3	RECEIVER MIXER CURRENT	-3 TO +3 DBM	0 TO -0.2 VDC	5%	1000
4-J-3	TRANSPONDER TEMPERATURE	+14 TO +158°	0 TO -0.2 VDC	5%	1000
B-20	COMMAND SYSTEM OUTPUT	17 BITS	0 OR -6 VDC		CONT.
B-19	COMMUTATOR SYNC.	---	---		CONT.

JPL 0309-1 DEC 60

CHANNEL	MODE 1		MODE 2		MODE 3		MODE 4		MODE 5		COGNIZANT ENGINEER
	Threshold Distance		Threshold Distance		Threshold Distance		Threshold Distance		Threshold Distance		
	Beacon	Transponder	Beacon	Transponder	Beacon	Transponder	Beacon	Transponder	Beacon	Transponder	
3-D-0		X		X		X		X			MATHISON
3-D-5		X		X		X		X			MATHISON
3-D-2		X		X		X		X			MATHISON
4-E-0		X		X		X		X			MATHISON
4-E-1		X		X		X		X			MATHISON
4-E-3		X		X		X		X			MATHISON
4-E-5		X		X		X		X			MATHISON
4-M-3		X		X		X		X			MATHISON
4-J-3		X		X		X		X			MATHISON
B-20		X		X		X		X			STOLARIK
B-19		X		X		X		X			WILTBEY

NOTE: AN X INDICATES THE MEASUREMENT IS BEING MADE.

JPL 0309-2 DEC 60

JPL TELEMETERING CHANNEL ASSIGNMENT

PROJECT RANGER IV-53

SYSTEM MID-COURSE PROPULSION

CHANNEL	MEASUREMENTS	MEASUREMENT RANGE	DATA ENCODER INPUT RANGE	COMBINED ACCURACY OF DATA ENCODER & DATA REDUCTION	SAMPLE RATE SEC/SAMPLE
2-D-5	M/C Nitrogen Tank Temp.	-25°F to +165°F	±0.25VDC	5%	10
5-A-0	M/C Nitrogen Tank Temp.	0 to 3600 PSIA	±6 VDC	15%*	0.2
5-A-1	FUEL TANK PRESSURE	0 to 450 PSIA	±6 VDC	15%*	0.2
4-H-8	M/C Nitrogen Tank Press.	0 to 3600 PSIA	±6 VDC	5%	1000
4-H-9	FUEL TANK PRESSURE	0 to 450PSIA	±6 VDC	5%	1000
4-J-5	Fuel Tank Temp.	-25°F to +165°F	0 to -0.2VDC	5%	1000
2-D-0	M/C MOTOR CHAMBER TEMP.	0 to 2000°F	±0.25 VDC	5%	10
2-D-2	M/C MOTOR CHAMBER TEMP.	0 to 2000°F	±0.25 VDC	5%	10
2-D-3	M/C MOTOR CHAMBER TEMP.	0 to 2000°F	±0.25 VDC	5%	10
2-D-4	M/C MOTOR CHAMBER TEMP.	0 to 2000°F	±0.25 VDC	5%	10
2-D-6	M/C MOTOR CHAMBER TEMP.	0 to 2000°F	±0.25 VDC	5%	10
2-D-7	M/C MOTOR CHAMBER TEMP.	0 to 2000°F	±0.25 VDC	5%	10
2-D-8	M/C MOTOR CHAMBER TEMP.	0 to 2000°F	±0.25 VDC	5%	10
2-D-9	M/C MOTOR CHAMBER TEMP.	0 to 2000°F	±0.25 VDC	5%	10

* DUE TO NOISE ERROR AT THRESHOLD DURING MIDCOURSE

JPL 0309-1 DEC 60

CHANNEL	MODE 1		MODE 2		MODE 3		MODE 4		MODE 5		COGNIZANT ENGINEER
	Threshold Distance		Threshold Distance		Threshold Distance		Threshold Distance		Threshold Distance		
	Beacon	Transponder	Beacon	Transponder	Beacon	Transponder	Beacon	Transponder	Beacon	Transponder	
2-D-5		-		X		-		-			LEE
5-A-0		X		X		X		X			LEE
5-A-1		X		X		X		X			LEE
4-H-8		X		X		X		X			LEE
4-H-9		X		X		X		X			LEE
4-J-5		X		X		X		X			LEE
2-D-0		-		X		-		-			LEE
2-D-2		-		X		-		-			LEE
2-D-3		-		X		-		-			LEE
2-D-4		-		X		-		-			LEE
2-D-6		-		X		-		-			LEEE
2-D-7		-		X		-		-			LEE
2-D-8		-		X		-		-			LEE
2-D-9		-		X		-		-			LEE

NOTE: AN X INDICATES THE MEASUREMENT IS BEING MADE.

JPL 0309-2 DEC 60

JPL TELEMETERING CHANNEL ASSIGNMENT

PROJECT RANGER P-53
SYSTEM SCIENTIFIC

CHANNEL	MEASUREMENTS	MEASUREMENT RANGE	DATA ENCODER INPUT RANGE	COMBINED ACCURACY OF DATA ENCODER & DATA REDUCTION	SAMPLE RATE
6	Ion Chamber	0 to 150 Bits per sec.	±1.0 V	-	-
8	RCA TELE.	1 NA *	N.A.*	10%	N.A.*

* RCA CH. 8 VCO MULTIPLEXED WITH JPL TELE.

JPL 0309-1 DEC 60

RM-4

CHANNEL	MODE 1		MODE 2		MODE 3		MODE 4		MODE 5		COGNIZANT ENGINEER
	Threshold Distance		Threshold Distance		Threshold Distance		Threshold Distance		Threshold Distance		
	Beacon	Transponder	Beacon	Transponder	Beacon	Transponder	Beacon	Transponder	Beacon	Transponder	
6		X		-		X		X			W.S. MACDONALD
8		-		-		X		X			KINDT

NOTE: AN X INDICATES THE MEASUREMENT IS BEING MADE.

JPL 0309-2 DEC 60

JPL TELEMETERING CHANNEL ASSIGNMENT

PROJECT RANGER [illegible]
SYSTEM MISCELLANEOUS

CHANNEL	MEASUREMENTS	MEASUREMENT RANGE	DATA ENCODER INPUT RANGE	COMBINED ACCURACY OF DATA ENCODER & DATA REDUCTION	SAMPLE RATE SEC/SAMPLE
8-2-2	SQUIB FIRE TELE	EVENT	+6 V PULSE	3 SEC	CONT.
3-F-6	TELE MODE INDICATION	MODES 1-1V	±0.5 VDC	5%	100
2-G-4	GYRO PKG. TEMP.	0 TO 70°C	±0.125 VDC	5%	100
2-G-6	TEMP. CONTROL TEMP.	-25°F TO +165°F	±0.125 VDC	5%	100
6-B-4	CALIBRATION - HIGH	-	+1.0 VDC	15%*	0.2
2-G-7	CALIBRATION - MID	-	0 VDC	5%	100
3-F-9	CALIBRATION - MID	-	0 VDC	5%	1000
4-J-7	CALIBRATION - HIGH	-	0 VDC	5%	1000
2-G-9	CALIBRATION - MID	-	0 VDC	5%	100
4-J-8	CALIBRATION - HIGH	-	0 VDC	5%	1000
4-E-2	CALIBRATION - HIGH	-	0 VDC	5%	100
4-E-4	CALIBRATION - HIGH	-	0 VDC	5%	100

* DUE TO NOISE ERROR AT THRESHOLD

JPL 0309.1 DEC 60

CHANNEL	MODE 1		MODE 2		MODE 3		MODE 4		MODE 5		COGNIZANT ENGINEER
	Threshold Distance		Threshold Distance		Threshold Distance		Threshold Distance		Threshold Distance		
	Beacon	Transponder	Beacon	Transponder	Beacon	Transponder	Beacon	Transponder	Beacon	Transponder	
8-2-2		X		X		X		X			QUINN
3-F-6		X		X		X		X			WILTSEY
2-G-4		X		-		X		X			HILL
2-G-6		X		-		X		X			KATTER
6-B-4		-		X				X			WILTSEY
2-G-7		X		-		X		X			WILTSEY
3-F-9		X		X		X		X			WILTSEY
4-J-7		X		X		X		X			WILTSEY
2-G-9		X		-		X		X			WILTSEY
4-J-8		X		X		X		X			WILTSEY
4-E-2		X		X		X		X			WILTSEY
4-E-4		X		X		X		X			WILTSEY

NOTE: AN X INDICATES THE MEASUREMENT IS BEING MADE.

JPL 0309-2 DEC 60

(Insert in Spacecraft Design Specification Book)

APPROVED:
System: M. R. Menard
Subsystem: A. Wiltsey
Subsystem: [illegible]

JET PROPULSION LABORATORY

Spec. No. RL-4-381
15 March 1962

P-54 (RA-7) SPACECRAFT TELEMETERING CHANNEL ASSIGNMENTS

1. SCOPE

This specification contains the JPL telemetering channel assignments for the Ranger RA-7 (P-54) spacecraft mission.

JPL TELEMETERING CHANNEL ASSIGNMENT

PROJECT RANGER P-54
SYSTEM ATTITUDE CONTROL

CHANNEL	MEASUREMENTS	MEASUREMENT RANGE	DATA ENCODER INPUT RANGE	COMBINED ACCURACY OF DATA ENCODER & DATA REDUCTION	SAMPLE RATE SEC/SAMPLE
5-A-2	YAW GYRO TORQUE	±0.4°/SEC	±5.8 VDC	15%*	0.2
5-A-3	ROLL GYRO TORQUE	±0.4°/SEC	±5.8 VDC	15%*	0.2
5-A-4	PITCH GYRO TORQUE	±0.4°/SEC	±5.8 VDC	15%*	0.2
2-C-0	ROLL POSITION (EARTH SENSOR)	±2.5°	±20 VDC	5%	10
2-C-1	HINGE EARTH SENSOR OUT	±2.5°	±20 VDC	5%	10
2-C-2	PITCH SWITCHING AMPLIFIER OUTPUT	POLARITY	0VDC +12.5 VDC -12.5 VDC	5%	10
2-C-3	YAW SWITCHING AMPLIFIER OUTPUT	POLARITY	0VDC +12.5 VDC -12.5 VDC	5%	10
2-C-4	YAW RATE GYRO (COARSE)	±1500°/HR	±20 VDC	5%	10
2-C-5	PITCH RATE GYRO (FINE)	±62°/HR	±0.83 VDC	5%	10
2-C-6	YAW RATE GYRO (FINE)	±62°/HR	±0.83 VDC	5%	10
2-C-7	ROLL RATE GYRO (FINE)	±62°/HR	±0.83 VDC	5%	10
2-C-8	EARTH SENSOR LIGHT INTENSITY	0.01 TO 17 FT-CANDLES	0 TO -0.5VDC	5%	10
2-D-1	-Y YAW JET VANE ACTUATOR TEMP.	0 TO +500°F	±0.25 VDC	5%	10
6-B-0	+Y YAW JET VANE ANGLE	±25°	±13.3VDC	15%*	0.2
6-B-1	-Y YAW JET VANE ANGLE	±25°	±13.3VDC	15%*	0.2

* DUE TO NOISE ERROR AT THRESHOLD DURING MIDCOURSE

JPL 0309-1 DEC 60

CHANNEL	MODE 1		MODE 2		MODE 3		MODE 4		MODE 5		COGNIZANT ENGINEER
	Threshold Distance		Threshold Distance		Threshold Distance		Threshold Distance		Threshold Distance		
	Beacon	Transponder	Beacon	Transponder	Beacon	Transponder	Beacon	Transponder	Beacon	Transponder	
5-A-2		X		X		X		X			HILL
5-A-3		X		X		X		X			HILL
5-A-4		X		X		X		X			HILL
2-C-0		X		-		X		X			HILL
2-C-1		X		-		X		X			MEISENHOLDER
2-C-2		X		-		X		X			HILL
2-C-3		X		-		X		X			HILL
2-C-4		X		-		X		X			HILL
2-C-5		X		-		X		X			HILL
2-C-6		X		-		X		X			HILL
2-C-7		X		-		X		X			HILL
2-C-8		X		-		X		X			MEISENHOLDER
2-D-1		-		X		-		-			GOULD
5-B-0		-		X		-		-			HILL
5-B-1		-		X		-		-			HILL

NOTE: AN X INDICATES THE MEASUREMENT IS BEING MADE.

JPL 0309-2 DEC 60

JPL TELEMETERING CHANNEL ASSIGNMENT

PROJECT RANGER P-54
SYSTEM ATTITUDE CONTROL

CHANNEL	MEASUREMENTS	MEASUREMENT RANGE	DATA ENCODER INPUT RANGE	COMBINED ACCURACY OF DATA ENCODER & DATA REDUCTION	SAMPLE RATE SEC/SAMPLE
6-B-2	+X PITCH JET VANE ANGLE	±25°	±13.3 VDC	15%*	0.2
6-B-3	-X PITCH JET VANE ANGLE	±25°	±13.3 VDC	15%*	0.2
3-D-1	PITCH RATE GYRO (COARSE)	±1500°/HR	±20 VDC	5%	10
3-D-3	PITCH SUNSENSOR OUT	±0.9°	±18 VDC	5%	10
3-D-4	YAW SUNSENSOR OUT	±0.9°	±18 VDC	5%	10
3-D-6	ANTENNA HINGE ANGLE	0 TO 180°	+0.33 TO +5.33 VDC	5%	10
3-D-7	ROLL RATE GYRO (COARSE)	±1500°/HR	±20 VDC	5%	10
3-F-8	A/C NITROGEN TANK PRESSURE	0 TO 3000 PSIA	±6 VDC	5%	100
2-G-5	A/C NITROGEN TANK TEMP.	-25°F TO +165°F	±0.125 VDC	5%	100
4-H-2	+Y YAW JET VANE ACTUATOR TEMP.	0°F TO +500°F	0 TO +0.5 VDC	5%	1000
4-J-0	EARTH SENSOR TEMPERATURE	±100°F	0 TO -0.2 VDC	5%	1000
4-J-1	+Y PITCH (7A13) SUN SENSOR TEMP.	+14 TO +140°F	0 TO -0.2 VDC	5%	1000
4-J-2	-Y PITCH (7A11) SUN SENSOR TEMP.	+14 TO +140°F	0 TO -0.2 VDC	5%	1000
4-J-9	DIFFERENTIAL (7A10 MINUS 7A12) SUN SENSOR TEMP.	±36°F IN -31 TO +90°F	0 TO -0.2 VDC	5%	1000

* DUE TO NOISE ERROR AT THRESHOLD DURING MIDCOURSE

JPL 0309-1 DEC 60

CHANNEL	MODE 1		MODE 2		MODE 3		MODE 4		MODE 5		COGNIZANT ENGINEER
	Threshold Distance		Threshold Distance		Threshold Distance		Threshold Distance		Threshold Distance		
	Beacon	Transponder	Beacon	Transponder	Beacon	Transponder	Beacon	Transponder	Beacon	Transponder	
6-B-2		-		X		-		-			HILL
6-B-3		-		X		-		-			HILL
3-D-1		X		X		X		X			HILL
3-D-3		X		X		X		X			MEISENHOLDER
3-D-4		X		X		X		X			MEISENHOLDER
3-D-6		X		X		X		X			HILL
3-D-7		X		X		X		X			HILL
3-F-8		X		X		X		X			DAHLGREN
2-G-5		X		-		X		X			DAHLGREN
4-H-1		X		X		X		X			GOULD
4-J-0		X		X		X		X			MEISENHOLDER
4-J-1		X		X		X		X			MEISENHOLDER
4-J-2		X		X		X		X			MEISENHOLDER
4-J-9		X		X		X		X			MEISENHOLDER

NOTE: AN X INDICATES THE MEASUREMENT IS BEING MADE

JPL 0309-2 DEC 60

JPL TELEMETERING CHANNEL ASSIGNMENT

PROJECT RANGER P-54
SYSTEM CC & S

CHANNEL	MEASUREMENTS	MEASUREMENT RANGE	DATA ENCODER INPUT RANGE	COMBINED ACCURACY OF DATA ENCODER & DATA REDUCTION	SAMPLE RATE SEC/SAMPLE
1	400 C.P.S.	400±1CPS	5 V PULSES 400±1PPS		CONT.
B-2-1	CC & S PROGRAM	EVENT	+ 5 V PULSE	3 SEC.	CONT.
8	MID-COURSE ACCELERATION	0 TO 2.4 FT/SEC^2	0 TO 25 PPS +5 V PULSE		CONT.

JPL 0309-1 DEC 60

CHANNEL	MODE 1		MODE 2		MODE 3		MODE 4		MODE 5		COGNIZANT ENGINEER
	Threshold Distance		Threshold Distance		Threshold Distance		Threshold Distance		Threshold Distance		
	Beacon	Transponder	Beacon	Transponder	Beacon	Transponder	Beacon	Transponder	Beacon	Transponder	
1		X		X		X		X			Harrison
3-2-1		X		X		X		X			Harrison
8		X		X		-		-			HAND

NOTE: AN X INDICATES THE MEASUREMENT IS BEING MADE.

JPL 0309-3 DEC 60

JPL TELEMETERING CHANNEL ASSIGNMENT

PROJECT RANGER P-54
SYSTEM CENTRAL POWER

CHANNEL	MEASUREMENTS	MEASUREMENT RANGE	DATA ENCODER INPUT RANGE	COMBINED ACCURACY OF DATA ENCODER & DATA REDUCTION	SAMPLE RATE
3-D-8	POWER SYSTEM VOLTAGE	+18 TO +31 VDC	0 TO 5 VDC	5%	10
4-E-6	+X PANEL (4A9) AMPERES	0 TO 5 AMPS	0 TO 5 VDC	5%	100
4-E-7	-X PANEL (4A10) AMPERES	0 TO 5 AMPS	0 TO 5 VDC	5%	100
3-F-0	-X PANEL (4A10) VOLTS	20 TO 35 VDC	20 TO 35 VDC	5%	100
3-F-1	+X PANEL (4A9) VOLTS	20 TO 35 VDC	20 TO 35 VDC	5%	100
3-F-2	POWER CONVERTER A/C (4A3) VOLTS	0 TO 4.5 VDC	0 TO 5 VDC	5%	100
3-F-3	POWER INVERTER DATA ENCODER (4A7) VOLTS	0 TO 4.5 VDC	0 TO 5 VDC	5%	100
3-F-4	POWER CONVERTER COMMAND (4A5) VOLTS	0 TO 4.5 VDC	0 TO 5 VDC	5%	100
3-F-5	POWER INVERTER SCIENTIFIC (4A8) VOLTS	0 TO 4.5 VDC	0 TO 5 VDC	5%	100
3-F-7	POWER SYSTEM CURRENT	0 TO 10 AMPS	0 TO 5 VDC	5%	100
2-G-0	+X PANEL (4A9) FRONT TEMP.	+45°F TO +145°F	±0.125 VDC	5%	100
2-G-1	+X PANEL (4A9) BACK TEMP	+45°F TO +145°F	±0.125 VDC	5%	100
2-G-2	-X PANEL (4A10) FRONT TEMP.	+45°F TO +145°F	±0.125 VDC	5%	100
2-G-3	-X PANEL (4A10) BACK TEMP.	+45°F TO +145°F	±0.125 VDC	5%	100
2-G-8	SOLAR PANEL EXTENSION	EVENT	6 V STEP	5%	100
4-H-0	POWER BOOST REG. (4A2) TEMP.	0 TO 200°F	0 TO +0.5 VDC	5%	1000
4-H-1	POWER CONVERTER A/C (4A3) TEMP	0 TO 200°F	0 TO +0.5 VDC	5%	1000
4-H-4	POWER 400 CPS 1 PHASE INVERTER (4A13) VOLTS	0 TO 4.5 VDC	0 TO +5 VDC	5%	1000

JPL 0309-1 DEC 60

CHANNEL	MODE 1		MODE 2		MODE 3		MODE 4		MODE 5		COGNIZANT ENGINEER
	Threshold Distance		Threshold Distance		Threshold Distance		Threshold Distance		Threshold Distance		
	Beacon	Transponder	Beacon	Transponder	Beacon	Transponder	Beacon	Transponder	Beacon	Transponder	
3-D-8		X		X		X		X			Almaguer
4-E-6		X		X		X		X			Ritchie
4-E-7		X		X		X		X			Ritchie
3-F-0		X		X		X		X			Ritchie
3-F-1		X		X		X		X			Ritchie
3-F-2		X		X		X		X			Alamguer
3-F-3		X		X		X		X			Almaguer
3-F-4		X		X		X		X			Almaguer
3-F-5		X		X		X		X			Almaguer
3-F-7		X		X		X		X			Almaguer
2-G-0		X		-		X		X			Ritchie
2-G-1		X		-		X		X			Ritchie
2-G-2		X		-		X		X			Ritchie
2-G-3		X		-		X		X			Ritchie
2-G-8		X		-		X		X			McPherson
4-H-0		X		X		X		X			Almaguer
4-H-1		X		X		X		X			Almaguer
4-H-4		X		X		X		X			Almaguer

NOTE: AN X INDICATES THE MEASUREMENT IS BEING MADE.

JPL 0309-2 DEC 69

JPL TELEMETERING CHANNEL ASSIGNMENT

PROJECT RANGER P-54
SYSTEM CENTRAL POWER

CHANNEL	MEASUREMENTS	MEASUREMENT RANGE	DATA ENCODER INPUT RANGE	COMBINED ACCURACY OF DATA ENCODER & DATA REDUCTION	SAMPLE RATE SEC/SAMPLE
4-H-5	POWER 400 CPS 3 PHASE INVERTER (4A14) VOLTS	0 TO 4.5 VDC	0 TO 5 VDC	5%	1000
4-H-6	SOLAR CELL SHORT CIRCUIT AMPERES	0 TO 0.2 AMPS	0 TO +0.5VDC	5%	1000
4-H-7	SOLAR CELL OPEN CIRCUIT VOLTAGE	0 TO 0.25VDC	0 TO 0.5VDC	5%	1000
4-J-4	BATTERY TEMPERATURE	+32 TO +158°F	0 TO -0.2VDC	5%	1000
4-J-6	POWER SWITCHING & LOGIC TEMP.	0 TO 200°F	0 TO -0.2VDC	5%	1000

JPL 0309-1 DEC 60

CHANNEL	MODE 1		MODE 2		MODE 3		MODE 4		MODE 5		COGNIZANT ENGINEER
	Threshold Distance		Threshold Distance		Threshold Distance		Threshold Distance		Threshold Distance		
	Beacon	Transponder	Beacon	Transponder	Beacon	Transponder	Beacon	Transponder	Beacon	Transponder	
4-H-5		X		X		X		X			Almaguer
4-H-6		X		X		X		X			Ritchie
4-H-7		X		X		X		X			Ritchie
4-J-4		X		X		X		X			BANES
4-J-6		X		X		X		X			Almaguer

NOTE: AN X INDICATES THE MEASUREMENT IS BEING MADE

JPL 0309-2 DEC 60

JPL TELEMETERING CHANNEL ASSIGNMENT

PROJECT RANGER P-54
SYSTEM COMMUNICATIONS

CHANNEL	MEASUREMENTS	MEASUREMENT RANGE	DATA ENCODER INPUT RANGE	COMBINED ACCURACY OF DATA ENCODER & DATA REDUCTION	SAMPLE RATE SEC/SAMPLE
3-D-0	RECEIVER AGC (COARSE)	-50 TO -140 DBM	+2 TO +5.75 VDC	5%	10
3-D-5	RECEIVER AGC (COARSE)	-50 TO -140 DBM	+2 TO +5.75 VDC	5%	10
3-D-2	RECEIVER PHASE ERROR (COARSE)	±2000 CPS	±1.5 VDC	5%	10
4-E-0	LO GAIN ANTENNA DRIVE	+10 TO +35 DBM	0 TO +0.5 VDC	5%	100
4-E-1	HIGH GAIN ANTENNA DRIVE	+10 TO +35 DBM	0 TO +0.5 VDC	5%	100
4-E-3	RECEIVER AGC (FINE)	-70 to -130 DBM	+4.0 to +5.0 VDC	5%	100
4-E-5	RECEIVER PHASE ERROR (FINE)	±200 CPS	±0.150 VDC	5%	100
4-H-3	RECEIVER MIXER CURRENT	-3 TO +3 DBM	0 TO -0.2 VDC	5%	1000
4-J-3	TRANSPONDER TEMPERATURE	+14 TO +158° F	0 TO -0.2 VDC	5%	1000
B-20	COMMAND SYSTEM OUTPUT	17 BITS	0 OR -6 VDC		CONT.
B-19	COMMUTATOR SYNC.	---	---		CONT.

JPL 0309-1 DEC 60

CHANNEL	MODE 1		MODE 2		MODE 3		MODE 4		MODE 5		COGNIZANT ENGINEER
	Threshold Distance		Threshold Distance		Threshold Distance		Threshold Distance		Threshold Distance		
	Beacon	Transponder	Beacon	Transponder	Beacon	Transponder	Beacon	Transponder	Beacon	Transponder	
3-D-0		X		X		X		X			MATHISON
3-D-5		X		X		X		X			MATHISON
3-D-2		X		X		X		X			MATHISON
4-E-0		X		X		X		X			MATHISON
4-E-1		X		X		X		X			MATHISON
4-E-3		X		X		X		X			MATHISON
4-E-5		X		X		X		X			MATHISON
4-H-3		X		X		X		X			MATHISON
4-J-3		X		X		X		X			MATHISON
8-20		X		X		X		X			STOLARIK
8-19		X		X		X		X			WILTSEY

NOTE: AN X INDICATES THE MEASUREMENT IS BEING MADE.

JPL 0309-2 DEC 60

JPL TELEMETERING CHANNEL ASSIGNMENT

PROJECT RANGER P-54

SYSTEM MID-COURSE PROPULSION

CHANNEL	MEASUREMENTS	MEASUREMENT RANGE	DATA ENCODER INPUT RANGE	COMBINED ACCURACY OF DATA ENCODER & DATA REDUCTION	SAMPLE RATE SEC/SAMPLE
2-D-5	M/C Nitrogen Tank Temp.	-25°F TO +165°F	±0.25VDC	5%	10
5-A-0	M/C Nitrogen Tank Press.	0 TO 3500 PSIA	±6 VDC	15%*	0.2
5-A-1	FUEL TANK PRESSURE	0 TO 460 PSIA	±6 VDC	15%*	0.2
4-H-8	M/C Nitrogen Tank Press.	0 TO 3500 PSIA	±6 VDC	5%	1000
4-H-9	FUEL TANK PRESSURE	0 TO 460PSIA	±6 VDC	5%	1000
4-J-5	Fuel Tank Temp.	-25°F TO +165°F	0TO-0.2VDC	5%	1000
2-D-0	M/C MOTOR CHAMBER TEMP.	0 TO 2000°F	±0.25 VDC	5%	10
2-D-2	M/C MOTOR CHAMBER TEMP.	0 TO 2000°F	±0.25 VDC	5%	10
2-D-3	M/C MOTOR CHAMBER TEMP.	0 TO 2000°F	±0.25 VDC	5%	10
2-D-4	M/C MOTOR CHAMBER TEMP.	0 TO 2000°F	±0.25 VDC	5%	10
2-D-6	M/C MOTOR CHAMBER TEMP.	0 TO 2000°F	±0.25 VDC	5%	10
2-D-7	M/C MOTOR CHAMBER TEMP.	0 TO 2000°F	±0.25 VDC	5%	10
2-D-8	M/C MOTOR CHAMBER TEMP.	0 TO 2000°F	±0.25 VDC	5%	10
2-D-9	M/C MOTOR CHAMBER TEMP.	0 TO 2000°F	±0.25 VDC	5%	10

* DUE TO NOISE ERROR AT THRESHOLD DURING MIDCOURSE

JPL 0309-1 DEC 60

CHANNEL	MODE 1		MODE 2		MODE 3		MODE 4		MODE 5		COGNIZANT ENGINEER
	Threshold Distance		Threshold Distance		Threshold Distance		Threshold Distance		Threshold Distance		
	Beacon	Transponder	Beacon	Transponder	Beacon	Transponder	Beacon	Transponder	Beacon	Transponder	
2-D-5		-		X		-		-			Schmitz
5-A-0		X		X		X		X			Schmitz
5-A-1		X		X		X		X			Schmitz
4-H-8		X		X		X		X			Schmitz
4-H-9		X		X		X		X			Schmitz
4-J-5		X		X		X		X			Schmitz
2-D-0		-		X		-		-			Schmitz
2-D-2		-		X		-		-			Schmitz
2-D-3		-		X		-		-			Schmitz
2-D-4		-		X		-		-			Schmitz
2-D-6		-		X		-		-			Schmitz
2-D-7		-		X		-		-			Schmitz
2-D-8		-		X		-		-			Schmitz
2-D-9		-		X		-		-			Schmitz

NOTE: AN X INDICATES THE MEASUREMENT IS BEING MADE.

JPL 0309-2 DEC 60

JPL TELEMETERING CHANNEL ASSIGNMENT

PROJECT RANGER P-54
SYSTEM SCIENTIFIC

CHANNEL	MEASUREMENTS	MEASUREMENT RANGE	DATA ENCODER INPUT RANGE	COMBINED ACCURACY OF DATA ENCODER & DATA REDUCTION	SAMPLE RATE
6	Science DCS	25 Bits per sec.	±1.0 V	-	-
8	RCA TELE.	1 NA *	N.A.*	10%	N.A.*

* RCA CH. 8 VCO MULTIPLEXED WITH JPL TELE.

JPL 0309-1 DEC 60

RM-4

CHANNEL	MODE 1		MODE 2		MODE 3		MODE 4		MODE 5		COGNIZANT ENGINEER
	Threshold Distance		Threshold Distance		Threshold Distance		Threshold Distance		Threshold Distance		
	Beacon	Transponder	Beacon	Transponder	Beacon	Transponder	Beacon	Transponder	Beacon	Transponder	
6		X		-		X		X			W.S. MacDonald
8		-		-		X		X			Kindt

NOTE: An X indicates the measurement is being made.

JPL 0309-2 DEC 60

JPL TELEMETERING CHANNEL ASSIGNMENT

PROJECT RANGER P-54
SYSTEM MISCELLANEOUS

CHANNEL	MEASUREMENTS	MEASUREMENT RANGE	DATA ENCODER INPUT RANGE	COMBINED ACCURACY OF DATA ENCODER & DATA REDUCTION	SAMPLE RATE SEC/SAMPLE
B-2-2	SQUIB FIRE TELE	EVENT	+6 V PULSE	3 SEC	CONT.
3-F-6	TELE MODE INDICATION	MODES I-IV	±0.5 VDC	5%	100
2-G-4	GYRO PKG. TEMP.	0 TO 70°C	±0.125 VDC	5%	100
2-G-6	TEMP. CONTROL TEMP.	-25°F TO +165°F	±0.125 VDC	5%	100
6-B-4	CALIBRATION - HIGH	-	+1.0 VDC	15%*	0.2
2-G-7	CALIBRATION - MID	-	0 VDC	5%	100
3-F-9	CALIBRATION - MID	-	0 VDC	5%	1000
4-J-7	CALIBRATION - HIGH	-	0 VDC	5%	1000
2-G-9	CALIBRATION - MID	-	0 VDC	5%	100
4-J-8	CALIBRATION - HIGH	-	0 VDC	5%	1000
4-E-2	CALIBRATION - HIGH	-	0 VDC	5%	100
4-E-4	CALIBRATION - HIGH	-	0 VDC	5%	100

* DUE TO NOISE ERROR AT THRESHOLD

JPL 0309-1 DEC 60

CHANNEL	MODE 1		MODE 2		MODE 3		MODE 4		MODE 5		COGNIZANT ENGINEER
	Threshold Distance		Threshold Distance		Threshold Distance		Threshold Distance		Threshold Distance		
	Beacon	Transponder	Beacon	Transponder	Beacon	Transponder	Beacon	Transponder	Beacon	Transponder	
8-2-2		X		X		X		X			QUINN
3-F-6		X		X		X		X			WILTSEY
2-G-4		X		-		X		X			HILL
2-G-6		X		-		X		X			Lerner
6-B-4		-		X		-		X			WILTSEY
2-G-7		X		-		X		X			WILTSEY
3-F-9		X		X		X		X			WILTSEY
4-J-7		X		X		X		X			WILTSEY
2-G-9		X		-		X		X			WILTSEY
4-J-8		X		X		X		X			WILTSEY
4-E-2		X		X		X		X			WILTSEY
4-E-4		X		X		X		X			WILTSEY

NOTE: AN X INDICATES THE MEASUREMENT IS BEING MADE.

JPL 0309.2 DEC 60

(Insert in Spacecraft Design Specification Book)

APPROVED:

System: M. R. Mesnard

Subsystem: R. Whitney

Subsystem: J. T. [illegible]

JET PROPULSION LABORATORY

Spec. No. RL-4-382

15 March 1962

P-55 (RA-8) SPACECRAFT TELEMETERING CHANNEL ASSIGNMENTS

1.0 SCOPE

This specification contains the JPL telemetering channel assignments for the Ranger RA-8 (P-55) spacecraft mission.

JPL TELEMETERING CHANNEL ASSIGNMENT

PROJECT RANGER P-55
SYSTEM ATTITUDE CONTROL

CHANNEL	MEASUREMENTS	MEASUREMENT RANGE	DATA ENCODER INPUT RANGE	COMBINED ACCURACY OF DATA ENCODER & DATA REDUCTION	SAMPLE RATE
5-A-2	Yaw Gyro Torque	±0.4°/Sec	±5.8 VDC	15%*	0.2
5-A-3	Roll Gyro Torque	±0.4°/Sec	±5.8 VDC	15%*	0.2
5-A-4	Pitch Gyro Torque	±0.4°/Sec	±5.8 VDC	15%*	0.2
2-C-0	Roll Position (Earth Sensor)	±2.5°	±20 VDC	5%	10
2-C-1	Hinge Earth Sensor Out	±2.5°	±20 VDC	5%	10
2-C-2	Pitch Switching Amplifier Output	POLARITY	0VDC +12.5 VDC -12.5 VDC	5%	10
2-C-3	Yaw Switching Amplifier Output	POLARITY	0VDC +12.5 VDC -12.5 VDC	5%	10
2-C-4	Yaw Rate Gyro (Coarse)	±1500°/Hr	±20 VDC	5%	10
2-C-5	Pitch Rate Gyro (Fine)	±62°/Hr	±0.83 VDC	5%	10
2-C-6	Yaw Rate Gyro (Fine)	±62°/Hr	±0.83 VDC	5%	10
2-C-7	Roll Rate Gyro (Fine)	±62°/Hr	±0.83 VDC	5%	10
2-C-8	Earth Sensor Light Intensity	0.01 to 17 Ft-Candles	0 to -0.5 VDC	5%	10
2-D-1	-Y Yaw Jet Vane Actuator Temp.	0 to +500°F	±0.25 VDC	5%	10
6-B-0	+Y Yaw Jet Vane Angle	±25°	±13.3 VDC	15%*	0.2
6-B-1	-Y Yaw Jet Vane Angle	±25°	±13.3 VDC	15%*	0.2

* Due to Noise Error at Threshold During Midcourse.

CHANNEL	MODE 1		MODE 2		MODE 3		MODE 4		MODE 5 *		COGNIZANT ENGINEER
	Threshold Distance		Threshold Distance		Threshold Distance		Threshold Distance		Threshold Distance		
	Beacon	Transponder	Beacon	Transponder	Beacon	Transponder	Beacon	Transponder	Beacon	Transponder	
5-A-2		X		X		X		X			Hill
5-A-3		X		X		X		X			Hill
5-A-4		X		X		X		X			Hill
2-C-0		X		-		X		X			Hill
2-C-1		X		-		X		X			Meisenholder
2-C-2		X		-		X		X			Hill
2-C-3		X		-		X		X			Hill
2-C-4		X		-		X		X			Hill
2-C-5		X		-		X		X			Hill
2-C-6		X		-		X		X			Hill
2-C-7		X		-		X		X			Hill
2-C-8		X		-		X		X			Meisenholder
2-D-1		-		X		-		-			Gould
6-B-0		-		X		-		-			Hill
6-B-1		-		X		-		-			Hill

NOTE: An X Indicates the Measurement is Being Made.

JPL TELEMETERING CHANNEL ASSIGNMENT

PROJECT Ranger P-55
SYSTEM ATTITUDE CONTROL

CHANNEL	MEASUREMENTS	MEASUREMENT RANGE	DATA ENCODER INPUT RANGE	COMBINED ACCURACY OF DATA ENCODER & DATA REDUCTION	SAMPLE RATE
6-B-2	+X Pitch Jet Vane Angle	±25°	±13.3 VDC	15%	0.2
6-B-3	-X Pitch Jet Vane Angle	±25°	±13.3 VDC	15%*	0.2
3-D-1	Pitch Rate Gyro (Coarse)	±1500°/Hr	±20 VDC	5%	10
3-D-3	Pitch Sun Sensor Out	±0.9°	±18 VDC	5%	10
3-D-4	Yaw Sun Sensor Out	±0.9°	±18 VDC	5%	10
3-D-6	Antenna Hinge Angle	0 to 180°	+0.33 To 5.33 VDC	5%	10
3-D-7	Roll Rate Gyro (Coarse)	±1500°/Hr	±20 VDC	5%	10
3-F-8	Nitrogen Tank Pressure	0 To 3500 PSIA	±6 VDC	5%	100
2-G-5	Nitrogen Tank Temp.	-25°F To +165°F	±0.125 VDC	5%	100
4-H-2	+Y Yaw Jet Vane Actuator Temp.	0°F to +500°F	0 To +0.5 VDC	5%	1000
4-J-0	Earth Sensor Temperature	±100°F	0 To -0.2 VDC	5%	1000
4-J-1	+Y Pitch (7A13) Sun Sensor Temp.	+14 To +140°F	0 To -0.2 VDC	5%	1000
4-J-2	-Y Pitch (7A11) Sun Sensor Temp.	+14 To +140°F	0 To -0.2 VDC	5%	1000
4-J-9	Differential (7A10 Minus 7A12) Sun Sensor Temp.	±36°F In -31 To +95°F	0 To -0.2 VDC	5%	1000

*Due to Noise Error at Threshold During Midcourse.

CHANNEL	MODE 1		MODE 2		MODE 3		MODE 4		MODE 5		COGNIZANT ENGINEER
	Threshold Distance		Threshold Distance		Threshold Distance		Threshold Distance		Threshold Distance		
	Beacon	Transponder	Beacon	Transponder	Beacon	Transponder	Beacon	Transponder	Beacon	Transponder	
6-B-2		-		X		-		-			Hill
6-B-3		-		X		-		-			Hill
3-D-1		X		X		X		X			Hill
3-D-3		X		X		X		X			Meisenholder
3-D-4		X		X		X		X			Meisenholder
3-D-6		X		X		X		X			Hill
3-D-7		X		X		X		X			Hill
3-F-8		X		X		X		X			Dahlgren
2-G-5		X		-		X		X			Dahlgren
4-H-1		X		X		X		X			Gould
4-J-0		X		X		X		X			Meisenholder
4-J-1		X		X		X		X			Meisenholder
4-J-2		X		X		X		X			Meisenholder
4-J-9		X		X		X		X			Meisenholder

NOTE: An X Indicates the Measurement is Being Made.

JPL TELEMETERING CHANNEL ASSIGNMENT

PROJECT RANGER, P-55
SYSTEM CC & S

CHANNEL	MEASUREMENTS	MEASUREMENT RANGE	DATA ENCODER INPUT RANGE	COMBINED ACCURACY OF DATA ENCODER & DATA REDUCTION	SAMPLE RATE
1	400 C.P.S.	400±1CPS	5 V Pulses 400±1 PPS		CONT.
B-2-1	CC&S Program	Event	+6 V Pulse	3 Sec.	CONT.
8	Midcourse Acceleration	0 To 2.4 Ft/Sec^2	0 To 25 PPS +5 V Pulse		CONT.

CHANNEL	MODE 1		MODE 2		MODE 3		MODE 4		MODE 5		COGNIZANT ENGINEER
	Threshold Distance		Threshold Distance		Threshold Distance		Threshold Distance		Threshold Distance		
	Beacon	Transponder	Beacon	Transponder	Beacon	Transponder	Beacon	Transponder	Beacon	Transponder	
1		X		X		X		X			Harrison
B-2-1		X		X		X		X			Harrison
8		X		X		-		-			Hand

NOTE: An X Indicates the Measurement is Being Made.

JPL TELEMETERING CHANNEL ASSIGNMENT

PROJECT RANGER, P-55
SYSTEM CENTRAL POWER

CHANNEL	MEASUREMENTS	MEASUREMENT RANGE	DATA ENCODER INPUT RANGE	COMBINED ACCURACY OF DATA ENCODER & DATA REDUCTION	SAMPLE RATE
3-D-8	Power System Voltage	+16 To +31 VDC	0 To 5 VDC	5%	10
4-E-6	-X Panel (4A9) Amperes	0 To 5 AMPS	0 To 5 VDC	5%	100
4-E-7	-X Panel (4A10) Amperes	0 To 5 AMPS	0 To 5 VDC	5%	100
3-F-0	-X Panel (4A10) Volts	20 To 35 VDC	20 To 35 VDC	5%	100
3-F-1	+X Panel (4A9) Volts	20 To 35 VDC	20 To 35 VDC	5%	100
3-F-2	Power Converter A/C (4A3) Volts	0 To 4.5 VDC	0 To 5 VDC	5%	100
3-F-3	Power Inverter Data Encoder (4A7) Volts	0 To 4.5 VDC	0 To 5 VDC	5%	100
3-F-4	Power Converter Command (4A5) Volts	0 To 4.5 VDC	0 To 5 VDC	5%	100
3-F-5	Power Inverter Scientific (4A8) Volts	0 To 4.5 VDC	0 To 5 VDC	5%	100
3-F-7	Power System Current	0 To 10 Amps	0 To 5 VDC	5%	100
2-G-0	+X Panel (4A9) Front Temp.	+45°F To +145°F	±0.125 VDC	5%	100
2-G-1	+X Panel (4A9) Back Temp.	+45°F To +145°F	±0.125 VDC	5%	100
2-G-2	-X Panel (4A10) Front Temp.	+45°F To +145°F	±0.125 VDC	5%	100
2-G-3	-X Panel (4A10) Back Temp.	+45°F To +145°F	±0.125 VDC	5%	100
2-G-8	Solar Panel Extension	Event	6 V Step	5%	100
4-H-0	Power Boost Reg. (4A2) Temp.	0 To 200°F	0 To +0.5 VDC	5%	1000
4-H-1	Power Converter A/C (4A3) Temp.	0 To 200°F	0 To +0.5 VDC	5%	1000
4-H-4	Power 400 CPS 1 Phase Inverter (4A13) Volts	0 To 4.5 VDC	0 To +5 VDC	5%	1000

CHANNEL	MODE 1		MODE 2		MODE 3		MODE 4		MODE 5		COGNIZANT ENGINEER
	Threshold Distance		Threshold Distance		Threshold Distance		Threshold Distance		Threshold Distance		
	Beacon	Transponder	Beacon	Transponder	Beacon	Transponder	Beacon	Transponder	Beacon	Transponder	
3-D-8		X		X		X		X			Alnaguer
4-E-6		X		X		X		X			Ritchie
4-E-7		X		X		X		X			Ritchie
3-F-0		X		X		X		X			Ritchie
3-F-1		X		X		X		X			Ritchie
3-F-2		X		X		X		X			Alnaguer
3-F-3		X		X		X		X			Alnaguer
3-F-4		X		X		X		X			Alnaguer
3-F-5		X		X		X		X			Alnaguer
3-F-7		X		X		X		X			Alnaguer
2-G-0		X		-		X		X			Ritchie
2-G-1		X		-		X		X			Ritchie
2-G-2		X		-		X		X			Ritchie
2-G-3		X		-		X		X			Ritchie
2-G-8		X		-		X		X			McPherson
4-H-0		X		X		X		X			Alnaguer
4-H-1		X		X		X		X			Alnaguer
4-H-4		X		X		X		X			Alnaguer

NOTE: An X Indicates the Measurement is Being Made.

JPL TELEMETERING CHANNEL ASSIGNMENT

PROJECT RANGER, P-55
SYSTEM CENTRAL POWER

CHANNEL	MEASUREMENTS	MEASUREMENT RANGE	DATA ENCODER INPUT RANGE	COMBINED ACCURACY OF DATA ENCODER & DATA REDUCTION	SAMPLE RATE
4-H-5	Power 400 CPS 3-Phase Inverter (4A14) Volts	0 To 4.5 VDC	0 To 5 VDC	5%	1000
4-H-6	Solar Cell Short Circuit Amperes	0 To 0.2 AMPS	0 To +0.5 VDC	5%	1000
4-H-7	Solar Cell Open Circuit Voltage	0 To 0.25 VDC	0 To 0.5 VDC	5%	1000
4-J-4	Battery Temperature	+32 To +158°F	0 To -0.2 VDC	5%	1000
4-J-6	Power Switching & Logic Temp.	0 To 200°F	0 To -0.2 VDC	5%	1000

CHANNEL	MODE 1		MODE 2		MODE 3		MODE 4		MODE 5		COGNIZANT ENGINEER
	Threshold Distance		Threshold Distance		Threshold Distance		Threshold Distance		Threshold Distance		
	Beacon	Transponder	Beacon	Transponder	Beacon	Transponder	Beacon	Transponder	Beacon	Transponder	
4-H-5		X		X		X		X			Almaguer
4-H-6		X		X		X		X			Ritchie
4-H-7		X		X		X		X			Ritchie
4-J-4		X		X		X		X			Banes
4-J-6		X		X		X		X			Almaguer

NOTE: An X Indicates the Measurement is Being Made.

JPL TELEMETERING CHANNEL ASSIGNMENT

PROJECT RANGER, P-[illegible]
SYSTEM COMMUNICATIONS

CHANNEL	MEASUREMENTS	MEASUREMENT RANGE	DATA ENCODER INPUT RANGE	COMBINED ACCURACY OF DATA ENCODER & DATA REDUCTION	SAMPLE RATE
3-D-0	Receiver AGC (Coarse)	-50 To -140 DBM	+2 To +5.25 VDC	5%	10
3-D-5	Receiver AGC (Coarse)	-50 To -140 DBM	+2 To +5.75 VDC	5%	10
3-D-2	Receiver Phase Error (Coarse)	±3000 CPS	±1.5 VDC	5%	10
4-E-0	Lo-Gain Antenna Drive	+10 To +35 DBM	0 To +0.5 VDC	5%	100
4-E-1	High-Gain Antenna Drive	+10 To +35 DBM	0 To +0.5 VDC	5%	100
4-E-2	S-Band - S. P. E.	±5.0 VDC	±1.5 VDC	5%	100
4-E-3	Receiver AGC (Fine)	-70 To -130 DBM	+4.0 To 5.0 VDC	5%	100
4-E-4	S-Band -AGC	-70 To -130 DBM	-5.0 To 0 VDC	5%	100
4-E-5	Receiver Phase Error(Fine)	±300 CPS	±0.150 VDC	5%	100
4-H-3	Receiver Mixer Current	-3 To +3 DBM	0 To -0.2 VDC	5%	1000
4-J-3	Transponder Temperature	-14 To 158°F	0 To -0.2 VDC	5%	1000
4-J-8	S-Band - Transponder Power Output	0 To +10 DBM	0 To -0.1 VDC	15%	1000
B-20	Command System Output	17 Bits	0 or -6 VDC		CONT.
B-19	Commutator Sync.	- - -	- - -		CONT.
2-[illegible]-9	S-Band Mixer Current	±3 DBM	0 To +0.1 VDC	15%	1000

CHANNEL	MODE 1		MODE 2		MODE 3		MODE 4		MODE 5		COGNIZANT ENGINEER
	Threshold Distance		Threshold Distance		Threshold Distance		Threshold Distance		Threshold Distance		
	Beacon	Transponder	Beacon	Transponder	Beacon	Transponder	Beacon	Transponder	Beacon	Transponder	
3-D-0		X		X		X		X			Mathison
3-D-5		X		X		X		X			Mathison
3-D-2		X		X		X		X			Mathison
4-E-0		X		X		X		X			Mathison
4-E-1		X		X		X		X			Mathison
4-E-2		X		X		X		X			Donnelly
4-E-3		X		X		X		X			Mathison
4-E-4		X		X		X		X			Donnelly
4-E-5		X		X		X		X			Mathison
4-H-3		X		X		X		X			Mathison
4-J-3		X		X		X		X			Mathison
4-J-8		X		X		X		X			Donnelly
B-20		X		X		X		X			Stolarik
B-19		X		X		X		X			Wiltsey
2-G-9		X		-		x		x			Donnelly

NOTE: An X Indicates the Measurement is Being Made.

JPL TELEMETERING CHANNEL ASSIGNMENT

PROJECT RANGER, P-55
SYSTEM MIDCOURSE PROPULSION

CHANNEL	MEASUREMENTS	MEASUREMENT RANGE	DATA ENCODER INPUT RANGE	COMBINED ACCURACY OF DATA ENCODER & DATA REDUCTION	SAMPLE RATE
2-D-5	M/C Nitrogen Tank Temp.	-25°F To +165°F	±0.25 VDC	5%	10
5-A-0	M/C Nitrogen Tank Pressure	0 To 3500 PSIA	±6 VDC	15%*	0.2
5-A-1	Fuel Tank Pressure	0 To 460 PSIA	±6 VDC	15%*	0.2
4-H-8	M/C Nitrogen Tank Pressure	0 To 3500 PSIA	±6 VDC	5%	1000
4-H-9	Fuel Tank Pressure	0 To 460 PSIA	±6 VDC	5%	1000
4-J-5	Fuel Tank Temp.	-25°F. To +165°F	0 To -0.2 VDC	5%	1000
2-D-0	M/C Motor Chamber Temp	0 To 2000°F.	±0.25 VDC	5%	10
2-D-2	M/C Motor Chamber Temp	0 To 2000°F.	±0.25 VDC	5%	10
2-D-3	M/C Motor Chamber Temp	0 To 2000°F	+0.25 VDC	5%	10
2-D-4	M/C Motor Chamber Temp	0 To 2000°F	±0.25 VDC	5%	10
2-D-6	M/C Motor Chamber Temp	0 To 2000°F	±0.25 VDC	5%	10
2-D-7	M/C Motor Chamber Temp	0 To 2000°F	±0.25 VDC	5%	10
2-D-8	M/C Motor Chamber Temp	0 To 2000°F	±0.25 VDC	5%	10
2-D-9	M/C Motor Chamber Temp	0 To 2000°F	±0.25 VDC	5%	10

*Due to Noise Error at Threshold during Midcourse.

CHANNEL	MODE 1		MODE 2		MODE 3		MODE 4		MODE 5		COGNIZANT ENGINEER
	Threshold Distance		Threshold Distance		Threshold Distance		Threshold Distance		Threshold Distance		
	Beacon	Transponder	Beacon	Transponder	Beacon	Transponder	Beacon	Transponder	Beacon	Transponder	
2-D-5		-		X		-		-			Schmitz
5-A-0		X		X		X		X			Schmitz
5-A-1		X		X		X		X			Schmitz
4-H-8		X		X		X		X			Schmitz
4-H-9		X		X		X		X			Schmitz
4-J-5		X		X		X		X			Schmitz
2-D-0		-		X		-		-			Schmitz
2-D-2		-		X		-		-			Schmitz
2-D-3		-		X		-		-			Schmitz
2-D-4		-		X		-		-			Schmitz
2-D-6		-		X		-		-			Schmitz
2-D-7		-		X		-		-			Schmitz
2-D-8		-		X		-		-			Schmitz
2-D-9		-		X		-		-			Schmitz

NOTE: An X Indicates the Measurement is Being Made.

JPL TELEMETERING CHANNEL ASSIGNMENT

PROJECT RANGER, P-55
SYSTEM SCIENTIFIC

CHANNEL	MEASUREMENTS	MEASUREMENT RANGE	DATA ENCODER INPUT RANGE	COMBINED ACCURACY OF DATA ENCODER & DATA REDUCTION	SAMPLE RATE
6	SCIENTIFIC D. C. S.	25 Bits/Sec	±1.0 V	-	-
8	RCA TELE.	N.A. *	N.A. *	10%	N.A. *

* RCA Ch. 8 VCO Multiplexed with JPL Tele.

CHANNEL	MODE 1		MODE 2		MODE 3		MODE 4		MODE 5		COGNIZANT ENGINEER
	Threshold Distance		Threshold Distance		Threshold Distance		Threshold Distance		Threshold Distance		
	Beacon	Transponder	Beacon	Transponder	Beacon	Transponder	Beacon	Transponder	Beacon	Transponder	
6		X		-		X		X			W. S. MacDonald
8		-		-		X		X			Kindt

NOTE: An X Indicates the Measurement is Being Made.

JPL TELEMETERING CHANNEL ASSIGNMENT

PROJECT RANGER, P-55
SYSTEM MISCELLANEOUS

CHANNEL	MEASUREMENTS	MEASUREMENT RANGE	DATA ENCODER INPUT RANGE	COMBINED ACCURACY OF DATA ENCODER & DATA REDUCTION	SAMPLE RATE
B-2-2	Squib Fire Tele.	Event	+6 V Pulse	3 Sec	CONT.
3-F-6	Tele. Mode Indication	Modes I-IV	±0.5 VDC	5%	100
2-G-4	Gyro Pkg. Temp.	0 To 70°C	±0.125 VDC	5%	100
2-G-6	Temp. Control Temp.	-25°F To 165°F	±0.125 VDC	5%	100
6-B-4	Calibration - High	-	+1.0 VDC	15%*	0.2
2-G-7	Calibration - Mid	-	0 VDC	5%	100
3-F-9	Calibration - Mid	-	0 VDC	5%	1000
4-J-7	Calibration - High	-	0 VDC	5%	1000

* Due to Noise Error at Threshold

CHANNEL	MODE 1		MODE 2		MODE 3		MODE 4		MODE 5		COGNIZANT ENGINEER
	Threshold Distance		Threshold Distance		Threshold Distance		Threshold Distance		Threshold Distance		
	Beacon	Transponder	Beacon	Transponder	Beacon	Transponder	Beacon	Transponder	Beacon	Transponder	
B-2-2		X		X		X		X			Quinn
3-F-6		X		X		X		X			Wiltsey
2-G-4		X		-		X		X			Hill
2-G-6		X		-		X		X			Lerner
6-B-4		-		X		-		-			Wiltsey
2-G-7		X		-		X		X			Wiltsey
3-F-9		X		X		X		X			Wiltsey
4-[illegible]-7		X		X		X		X			Wiltsey

NOTE: An X indicates the Measurement is Being Made.

(Insert in Spacecraft Design Specification Book)

APPROVED:

System: M. R. Mesnard

Subsystem: A. Wiltsey

Subsystem: J. F. Kenkel

JET PROPULSION LABORATORY

Spec. No. RL-4-383

15 March 1962

P-56 (RA-9) SPACECRAFT TELEMETERING CHANNEL ASSIGNMENTS

1.0 SCOPE

This specification contains the JPL telemetering channel assignments for the Ranger RA-9 (P-56) spacecraft mission.

JPL TELEMETERING CHANNEL ASSIGNMENT

PROJECT RANGER P-56
SYSTEM ATTITUDE CONTROL

CHANNEL	MEASUREMENTS	MEASUREMENT RANGE	DATA ENCODER INPUT RANGE	COMBINED ACCURACY OF DATA ENCODER & DATA REDUCTION	SAMPLE RATE
5-A-2	Yaw Gyro Torque	±0.4°/Sec	±5.8 VDC	15%*	0.2
5-A-3	Roll Gyro Torque	±0.4°/Sec	±5.8 VDC	15%*	0.2
5-A-4	Pitch Gyro Torque	±0.4°/Sec	±5.8 VDC	15%*	0.2
2-C-0	Roll Position (Earth Sensor)	±2.5°	±20 VDC	5%	10
2-C-1	Hinge Earth Sensor Out	±2.5°	±20 VDC	5%	10
2-C-2	Pitch Switching Amplifier Output	POLARITY	0VDC +12.5 VDC -12.5 VDC	5%	10
2-C-3	Yaw Switching Amplifier Output	POLARITY	0VDC +12.5 VDC -12.5 VDC	5%	10
2-C-4	Yaw Rate Gyro (Coarse)	±1500°/Hr	±20 VDC	5%	10
2-C-5	Pitch Rate Gyro (Fine)	±62°/Hr	±0.83 VDC	5%	10
2-C-6	Yaw Rate Gyro (Fine)	±62°/Hr	±0.83 VDC	5%	10
2-C-7	Roll Rate Gyro (Fine)	±62°/Hr	±0.83 VDC	5%	10
2-C-8	Earth Sensor Light Intensity	0.01 to 17 Ft-Candles	0 to -0.5 VDC	5%	10
2-D-1	-Y Yaw Jet Vane Actuator Temp.	0 to +500°F	±0.25 VDC	5%	10
6-B-0	+Y Yaw Jet Vane Angle	±25°	±13.3 VDC	15%*	0.2
6-B-1	-Y Yaw Jet Vane Angle	±25°	±13.3 VDC	15%*	0.2

* Due to Noise Error at Threshold During Midcourse.

CHANNEL	MODE 1		MODE 2		MODE 3		MODE 4		MODE 5		COGNIZANT ENGINEER
	Threshold Distance		Threshold Distance		Threshold Distance		Threshold Distance		Threshold Distance		
	Beacon	Transponder	Beacon	Transponder	Beacon	Transponder	Beacon	Transponder	Beacon	Transponder	
5-A-2		X		X		X		X			Hill
5-A-3		X		X		X		X			Hill
5-A-4		X		X		X		X			Hill
2-C-0		X		-		X		X			Hill
2-C-1		X		-		X		X			Meisenholder
2-C-2		X		-		X		X			Hill
2-C-3		X		-		X		X			Hill
2-C-4		X		-		X		X			Hill
2-C-5		X		-		X		X			Hill
2-C-6		X		-		X		X			Hill
2-C-7		X		-		X		X			Hill
2-C-8		X		-		X		X			Meisenholder
2-D-1		-		X		-		-			Gould
6-B-0		-		X		-		-			Hill
6-B-1		-		X		-		-			Hill
	-										

NOTE: An X Indicates the Measurement is Being Made.

JPL TELEMETERING CHANNEL ASSIGNMENT

PROJECT Ranger P-56
SYSTEM ATTITUDE CONTROL

CHANNEL	MEASUREMENTS	MEASUREMENT RANGE	DATA ENCODER INPUT RANGE	COMBINED ACCURACY OF DATA ENCODER & DATA REDUCTION	SAMPLE RATE
6-B-2	+X Pitch Jet Vane Angle	±25°	±13.3 VDC	15%*	0.2
6-B-3	-X Pitch Jet Vane Angle	±25°	±13.3 VDC	15%*	0.2
3-D-1	Pitch Rate Gyro (Coarse)	±1500°/Hr	±20 VDC	5%	10
3-D-3	Pitch Sun Sensor Out	±0.9°	±18 VDC	5%	10
3-D-4	Yaw Sun Sensor Out	±0.9°	±18 VDC	5%	10
3-D-6	Antenna Hinge Angle	0 to 180°	+0.33 To 5.33 VDC	5%	10
3-D-7	Roll Rate Gyro (Coarse)	±1500°/Hr	±20 VDC	5%	10
3-F-8	Nitrogen Tank Pressure	0 To 3500 PSIA	±6 VDC	5%	100
2-G-5	Nitrogen Tank Temp.	-25°F To +165°F	±0.125 VDC	5%	100
4-H-2	+Y Yaw Jet Vane Actuator Temp.	0°F to +500°F	0 To +0.5 VDC	5%	1000
4-J-0	Earth Sensor Temperature	±100°F	0 To -0.2 VDC	5%	1000
4-J-1	+Y Pitch (7A13) Sun Sensor Temp.	+14 To +140°F	0 To -0.2 VDC	5%	1000
4-J-2	-Y Pitch (7A11) Sun Sensor Temp.	+14 To +140°F	0 To -0.2 VDC	5%	1000
4-J-9	Differential (7A10 Minus 7A12) Sun Sensor Temp.	±36°F in -31 To +95°F	0 To -0.2 VDC	5%	1000

*Due to Noise Error at Threshold During Midcourse.

CHANNEL	MODE 1		MODE 2		MODE 3		MODE 4		MODE 5		COGNIZANT ENGINEER
	Threshold Distance		Threshold Distance		Threshold Distance		Threshold Distance		Threshold Distance		
	Beacon	Transponder	Beacon	Transponder	Beacon	Transponder	Beacon	Transponder	Beacon	Transponder	
6-B-2		-		X		-		-			Hill
6-B-3		-		X		-		-			Hill
3-D-1		X		X		X		X			Hill
3-D-3		X		X		X		X			Meisenholder
3-D-4		X		X		X		X			Meisenholder
3-D-6		X		X		X		X			Hill
3-D-7		X		X		X		X			Hill
3-F-8		X		X		X		X			Dahlgren
2-G-5		X		-		X		X			Dahlgren
4-H-1		X		X		X		X			Gould
4-J-0		X		X		X		X			Meisenholder
4-J-1		X		X		X		X			Meisenholder
4-J-2		X		X		X		X			Meisenholder
4-J-9		X		X		X		X			Meisenholder

NOTE: An _ Indicates the Measurement is Being Made.

JPL TELEMETERING CHANNEL ASSIGNMENT

PROJECT RANGER, P-56
SYSTEM CC & S

CHANNEL	MEASUREMENTS	MEASUREMENT RANGE	DATA ENCODER INPUT RANGE	COMBINED ACCURACY OF DATA ENCODER & DATA REDUCTION	SAMPLE RATE
1	400 C. P. S.	400±1CPS	6 V Pulses 400±1 PPS		CONT.
B-2-1	CC&S Program	Event	+6 V Pulse	3 Sec.	CONT.
8	Midcourse Acceleration	0 To 2.4 Ft/Sec^2	0 To 25 PPS +5 V Pulse		CONT.

CHANNEL	MODE 1		MODE 2		MODE 3		MODE 4		MODE 5		COGNIZANT ENGINEER
	Threshold Distance		Threshold Distance		Threshold Distance		Threshold Distance		Threshold Distance		
	Beacon	Transponder	Beacon	Transponder	Beacon	Transponder	Beacon	Transponder	Beacon	Transponder	
1		X		X		X		X			Harrison
B-2-1		X		X		X		X			Harrison
8		X		X		-		-			Hand

NOTE: An X Indicates the Measurement is Being Made.

JPL TELEMETERING CHANNEL ASSIGNMENT

PROJECT RANGER, P-56
SYSTEM CENTRAL POWER

CHANNEL	MEASUREMENTS	MEASUREMENT RANGE	DATA ENCODER INPUT RANGE	COMBINED ACCURACY OF DATA ENCODER & DATA REDUCTION	SAMPLE RATE
3-D-8	Power System Voltage	+16 To +31 VDC	0 To 5 VDC	5%	10
4-E-6	-X Panel (4A9) Amperes	0 To 5 AMPS	0 To 5 VDC	5%	100
4-E-7	-X Panel (4A10) Amperes	0 To 5 AMPS	0 To 5 VDC	5%	100
3-F-0	-X Panel (4A10) Volts	20 To 35 VDC	20 To 35 VDC	5%	100
3-F-1	+X Panel (4A9) Volts	20 to 35 VDC	20 To 35 VDC	5%	100
3-F-2	Power Converter A/C (4A3) Volts	0 To 4.5 VDC	0 To 5 VDC	5%	100
3-F-3	Power Inverter Data Encoder (4A7) Volts	0 To 4.5 VDC	0 To 5 VDC	5%	100
3-F-4	Power Converter Command (4A5) Volts	0 To 4.5 VDC	0 To 5 VDC	5%	100
3-F-5	Power Inverter Scientific (4A8) Volts	0 To 4.5 VDC	0 To 5 VDC	5%	100
3-F-7	Power System Current	0 To 10 Amps	0 To 5 VDC	5%	100
2-G-0	+X Panel (4A9) Front Temp.	+45°F To +145°F	±0.125 VDC	5%	100
2-G-1	+X Panel (4A9) Back Temp.	+45°F To +145°F	±0.125 VDC	5%	100
2-G-2	-X Panel (4A10) Front Temp.	+45°F To +145°F	±0.125 VDC	5%	100
2-G-3	-X Panel (4A10) Back Temp.	+45°F To +145°F	±0.125 VDC	5%	100
2-G-8	Solar Panel Extension	Event	6 V Step	5%	100
4-H-0	Power Boost Reg. (4A2) Temp.	0 To 200°F	0 To +0.5 VDC	5%	1000
4-H-1	Power Converter A/C (4A3) Temp.	0 To 200°F	0 To +0.5 VDC	5%	1000
4-H-4	Power 400 CPS 1 Phase Inverter (4A13) Volts	0 To 4.5 VDC	0 To +5 VDC	5%	1000

CHANNEL	MODE 1		MODE 2		MODE 3		MODE 4		MODE 5		COGNIZANT ENGINEER
	Threshold Distance		Threshold Distance		Threshold Distance		Threshold Distance		Threshold Distance		
	Beacon	Transponder	Beacon	Transponder	Beacon	Transponder	Beacon	Transponder	Beacon	Transponder	
3-D-8		X		X		X		X			Almaguer
4-E-6		X		X		X		X			Ritchie
4-E-7		X		X		X		X			Ritchie
3-F-0		X		X		X		X			Ritchie
3-F-1		X		X		X		X			Ritchie
3-F-2		X		X		X		X			Almaguer
3-F-3		X		X		X		X			Almaguer
3-F-4		X		X		X		X			Almaguer
3-F-5		X		X		X		X			Almaguer
3-F-7		X		X		X		X			Almaguer
2-G-0		X		-		X		X			Ritchie
2-G-1		X		-		X		X			Ritchie
2-G-2		X		-		X		X			Ritchie
2-G-3		X		-		X		X			Ritchie
2-G-8		X		-		X		X			McPherson
4-H-0		X		X		X		X			Almaguer
4-H-1		X		X		X		X			Almaguer
4-H-4		X		X		X		X			Almaguer

NOTE: An X Indicates the Measurement is Being Made.

JPL TELEMETERING CHANNEL ASSIGNMENT

PROJECT RANGER, P-56
SYSTEM CENTRAL POWER

CHANNEL	MEASUREMENTS	MEASUREMENT RANGE	DATA ENCODER INPUT RANGE	COMBINED ACCURACY OF DATA ENCODER & DATA REDUCTION	SAMPLE RATE
4-H-5	Power 400 CPS 3-Phase Inverter (4A14) Volts	0 To 4.5 VDC	0 To 5 VDC	5%	1000
4-H-6	Solar Cell Short Circuit Amperes	0 To 0.2 AMPS	0 To +0.5 VDC	5%	1000
4-H-7	Solar Cell Open Circuit Voltage	0 To 0.25 VDC	0 To 0.5 VDC	5%	1000
4-J-4	Battery Temperature	+32 To +158°F	0 To -0.2 VDC	5%	1000
4-J-6	Power Switching & Logic Temp.	0 To 200°F	0 To -0.2 VDC	5%	1000

CHANNEL	MODE 1		MODE 2		MODE 3		MODE 4		MODE 5		COGNIZANT ENGINEER
	Threshold Distance		Threshold Distance		Threshold Distance		Threshold Distance		Threshold Distance		
	Beacon	Transponder	Beacon	Transponder	Beacon	Transponder	Beacon	Transponder	Beacon	Transponder	
4-H-5		X		X		X		X			Almaguer
4-H-6		X		X		X		X			Ritchie
4-H-7		X		X		X		X			Ritchie
4-J-4		X		X		X		X			Banes
4-J-6		X		X		X		X			Almaguer

NOTE: An X Indicates the Measurement is Being Made.

JPL TELEMETERING CHANNEL ASSIGNMENT

PROJECT RANGER, P-56
SYSTEM COMMUNICATIONS

CHANNEL	MEASUREMENTS	MEASUREMENT RANGE	DATA ENCODER INPUT RANGE	COMBINED ACCURACY OF DATA ENCODER & DATA REDUCTION	SAMPLE RATE
3-D-0	Receiver AGC (Coarse)	-50 To -140 DBM	+2 To +5.75 VDC	5%	10
3-D-5	Receiver AGC (Coarse)	-50 To -140 DBM	+2 To +5.75 VDC	5%	10
3-D-2	Receiver Phase Error (Coarse)	±2000 CPS	±1.5 VDC	5%	10
4-E-0	Lo-Gain Antenna Drive	+10 To +35 DBM	0 To +0.5 VDC	5%	100
4-E-1	High-Gain Antenna Drive	+10 To +35 DBM	0 To +0.5 VDC	5%	100
4-E-2	S-Band - S.P.E.	±5.0 VDC	±1.5 VDC	5%	100
4-E-3	Receiver AGC (Fine)	-70 To -130 DBM	+4.0 To 5.0 VDC	5%	100
4-E-4	S-Band -AGC	-70 To -120 DBM	-3.0 To 0 VDC	5%	100
4-E-5	Receiver Phase Error(Fine	±200 CPS	±0.150 VDC	5%	100
4-H-3	Receiver Mixer Current	-3 To +3 DBM	0 To -0.2 VDC	5%	1000
4-J-3	Transponder Temperature	+14 To 158°F	0 To -0.2 VDC	5%	1000
4-J-8	S-Band - Transponder Power Output	0 To +10 DBM	0 To -0.1 VDC	15%	1000
B-20	Command System Output	17 Bits	0 or -6 VDC		CONT.
B-19	Commutator Sync.	- - -	- - -		CONT.
2-G-9	S-Band Mixer Current	±3 DBM	0 To +0.1 VDC	15%	1000

CHANNEL	MODE 1		MODE 2		MODE 3		MODE 4		MODE 5		COGNIZANT ENGINEER
	Threshold Distance		Threshold Distance		Threshold Distance		Threshold Distance		Threshold Distance		
	Beacon	Transponder	Beacon	Transponder	Beacon	Transponder	Beacon	Transponder	Beacon	Transponder	
3-D-0		X		X		X		X			Mathison
3-D-5		X		X		X		X			Mathison
3-D-2		X		X		X		X			Mathison
4-E-0		X		X		X		X			Mathison
4-E-1		X		X		X		X			Mathison
4-E-2		X		X		X		X			Donnelly
4-E-3		X		X		X		X			Mathison
4-E-4		X		X		X		X			Donnelly
4-E-5		X		X		X		X			Mathison
4-H-3		X		X		X		X			Mathison
4-J-3		X		X		X		X			Mathison
4-J-8		X		X		X		X			Donnelly
B-20		X		X		X		X			Stolarik
B-19		X		X		X		X			Wiltsey
2-G-9		X		-		x		x			Donnelly

NOTE: An X Indicates the Measurement is Being Made.

JPL TELEMETERING CHANNEL ASSIGNMENT

PROJECT RANGER, P-56
SYSTEM MIDCOURSE PROPULSION

CHANNEL	MEASUREMENTS	MEASUREMENT RANGE	DATA ENCODER INPUT RANGE	COMBINED ACCURACY OF DATA ENCODER & DATA REDUCTION	SAMPLE RATE
2-D-5	M/C Nitrogen Tank Temp.	-25°F To +165°F	±0.25 VDC	5%	10
5-A-0	M/C Nitrogen Tank Pressure	0 To 3500 PSIA	±6 VDC	15%*	0.2
5-A-1	Fuel Tank Pressure	0 To 460 PSIA	±6 VDC	15%*	0.2
4-H-8	M/C Nitrogen Tank Pressure	0 To 3500 PSIA	±6 VDC	5%	1000
4-H-9	Fuel Tank Pressure	0 To 460 PSIA	±6 VDC	5%	1000
4-J-5	Fuel Tank Temp.	-25°F. To +165°F	0 To -0.2 VDC	5%	1000
2-D-0	M/C Motor Chamber Temp	0 To 2000°F.	±0.25 VDC	5%	10
2-D-2	M/C Motor Chamber Temp	0 To 2000°F.	±0.25 VDC	5%	10
2-D-3	M/C Motor Chamber Temp	0 To 2000°F	+0.25 VDC	5%	10
2-D-4	M/C Motor Chamber Temp	0 To 2000°F	±0.25 VDC	5%	10
2-D-6	M/C Motor Chamber Temp	0 To 2000°F	±0.25 VDC	5%	10
2-D-7	M/C Motor Chamber Temp	0 To 2000°F	±0.25 VDC	5%	10
2-D-8	M/C Motor Chamber Temp	0 To 2000°F	±0.25 VDC	5%	10
2-D-9	M/C Motor Chamber Temp	0 To 2000°F	±0.25 VDC	5%	10

*Due to Noise Error at Threshold during Midcourse.

CHANNEL	MODE 1		MODE 2		MODE 3		MODE 4		MODE 5		COGNIZANT ENGINEER
	Threshold Distance		Threshold Distance		Threshold Distance		Threshold Distance		Threshold Distance		
	Beacon	Transponder	Beacon	Transponder	Beacon	Transponder	Beacon	Transponder	Beacon	Transponder	
2-D-5		-		X		-		-			Schmitz
5-A-0		X		X		X		X			Schmitz
5-A-1		X		X		X		X			Schmitz
4-H-8		X		X		X		X			Schmitz
4-H-9		X		X		X		X			Schmitz
4-J-5		X		X		X		X			Schmitz
2-D-0		-		X		-		-			Schmitz
2-D-2		-		X		-		-			Schmitz
2-D-3		-		X		-		-			Schmitz
2-D-4		-		X		-		-			Schmitz
2-D-6		-		X		-		-			Schmitz
2-D-7		-		X		-		-			Schmitz
2-D-8		-		X		-		-			Schmitz
2-D-9		-		X		-		-			Schmitz

NOTE: An X Indicates the Measurement is Being Made.

JPL TELEMETERING CHANNEL ASSIGNMENT

PROJECT RANGER, P-56
SYSTEM SCIENTIFIC

CHANNEL	MEASUREMENTS	MEASUREMENT RANGE	DATA ENCODER INPUT RANGE	COMBINED ACCURACY OF DATA ENCODER & DATA REDUCTION	SAMPLE RATE
6	SCIENTIFIC D. C. S.	25 Bits/Sec	±1.0 V	-	-
8	RCA TELE.	1 NA *	N.A. *	10%	N.A. *

* RCA Ch. 8 VCO Multiplexed with JPL Tele.

CHANNEL	MODE 1		MODE 2		MODE 3		MODE 4		MODE 5		COGNIZANT ENGINEER
	Threshold Distance		Threshold Distance		Threshold Distance		Threshold Distance		Threshold Distance		
	Beacon	Transponder	Beacon	Transponder	Beacon	Transponder	Beacon	Transponder	Beacon	Transponder	
6		X		-		X		X			W. S. MacDonald
8		-		-		X		X			Kindt

NOTE: An X Indicates the Measurement is Being Made.

JPL TELEMETERING CHANNEL ASSIGNMENT

PROJECT RANGER, P-56
SYSTEM MISCELLANEOUS

CHANNEL	MEASUREMENTS	MEASUREMENT RANGE	DATA ENCODER INPUT RANGE	COMBINED ACCURACY OF DATA ENCODER & DATA REDUCTION	SAMPLE RATE
B-2-2	Squib Fire Tele.	Event	+6 V Pulse	3 Sec	CONT.
3-F-6	Tele. Mode Indication	Modes I-IV	±0.5 VDC	5%	100
2-G-4	Gyro Pkg. Temp.	0 To 70°C	±0.125 VDC	5%	100
2-G-6	Temp. Control Temp.	-25°F To 165°F	±0.125 VDC	5%	100
6-B-4	Calibration - High	-	+1.0 VDC	15%*	0.2
2-G-7	Calibration - Mid	-	0 VDC	5%	100
3-F-9	Calibration - Mid	-	0 VDC	5%	1000
4-J-7	Calibration - High	-	0 VDC	5%	1000

* Due to Noise Error at Threshold

CHANNEL	MODE 1		MODE 2		MODE 3		MODE 4		MODE 5		COGNIZANT ENGINEER
	Threshold Distance		Threshold Distance		Threshold Distance		Threshold Distance		Threshold Distance		
	Beacon	Transponder	Beacon	Transponder	Beacon	Transponder	Beacon	Transponder	Beacon	Transponder	
B-2-2		X		X		X		X			Quinn
3-F-6		X		X		X		X			Wiltsey
2-G-4		X		-		X		X			Hill
2-G-6		X		-		X		X			Lerner
6-B-4		-		X		-		-			Wiltsey
2-G-7		X		-		X		X			Wiltsey
3-F-9		X		X		X		X			Wiltsey
4-J-7		X		X		X		X			Wiltsey

NOTE: An X indicates the Measurement is Being Made.

(Insert in Spacecraft Design Specification Book)

APPROVED:
System: M. R. Mesnard/JR.
Subsystem: P. C. Harris
Subsystem: V. Anthony

JET PROPULSION LABORATORY

Spec. No.
RL-4-410 A
5 April 1962

SUPERSEDES:
RL-4-410
10 January 1962

FUNCTIONAL SPECIFICATION
RANGER RA-6 (P-53) THRU RA-9 (P-56) SPACECRAFT
FLIGHT EQUIPMENT
CENTRAL COMPUTER AND SEQUENCER

✱ DENOTES CHANGE

1.0 SCOPE

This specification lists the functions, in chronological order, which the RA-6 through 9 spacecraft Central Computer and Sequencer (CC&S) performs during prelaunch, launch, flight, and pre-impact operations. The equipment with which the CC&S operates and the characteristics of the input and output signals are described. Accuracy, operational and functional requirements are listed.

2.0 APPLICABLE DOCUMENTS

2.1 The following documents apply to this specification.

SPECIFICATIONS

Jet Propulsion Laboratory

RL-3-110	Design Characteristics
RL-3-120	Design Restraints

a. (ES-1) Velocity increment for thrust termination:

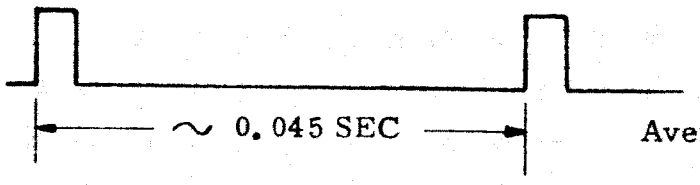

Rise time: $\leq$ 5.0 μsec
Fall time: $\leq$ 5.0 μsec
Duration : 1.25 ms
Average rate : 22.4 pps

The average pulse rate from the accelerometer is about 22.4 pps with a maximum rate of 25 pps.

b. (ES-2) Capacitor cycling pulse

Rise time: $\leq$ 1.0 μsec
Fall time: $\leq$ 350 μsec
Duration: 150 ±100 msec

The capacitor charging pulse is supplied for cycling the gyro capacitor when the first real time command is sent for spacecraft maneuvers.

3.2.1.2 Central Power

A 38.4 kpps square wave output as shown below is needed for a power frequency reference.

a. (ES-1) 38.4 kpps frequency reference

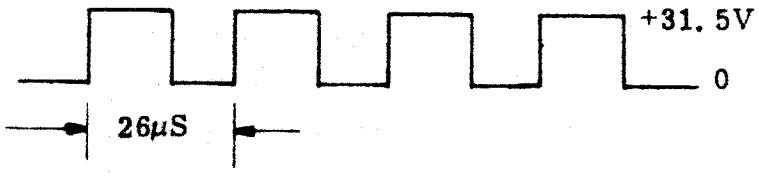

Rise time: $\leq$ 1.0 μsec
Fall time: $\leq$ 1.0 μsec
Duration: 13 μsec
Frequency: 38.4 kpps

b. 2.4 KC power to CC&S

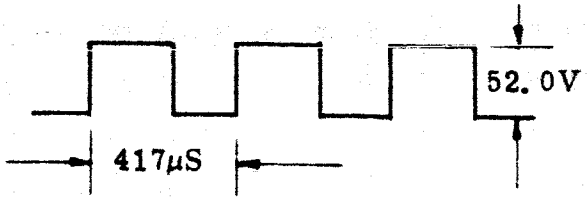

Rise time: 20 μsec
Fall time: 20 μsec
Duration : 209 μsec

✱ 3.2.1.3 The scientific experiments require only one switching function (turn on high voltage), as shown in figure 3.2-I. In addition, 400 cycle synchronization is available, the control wave-shape of which is shown in paragraph 3.2.1.3.1.

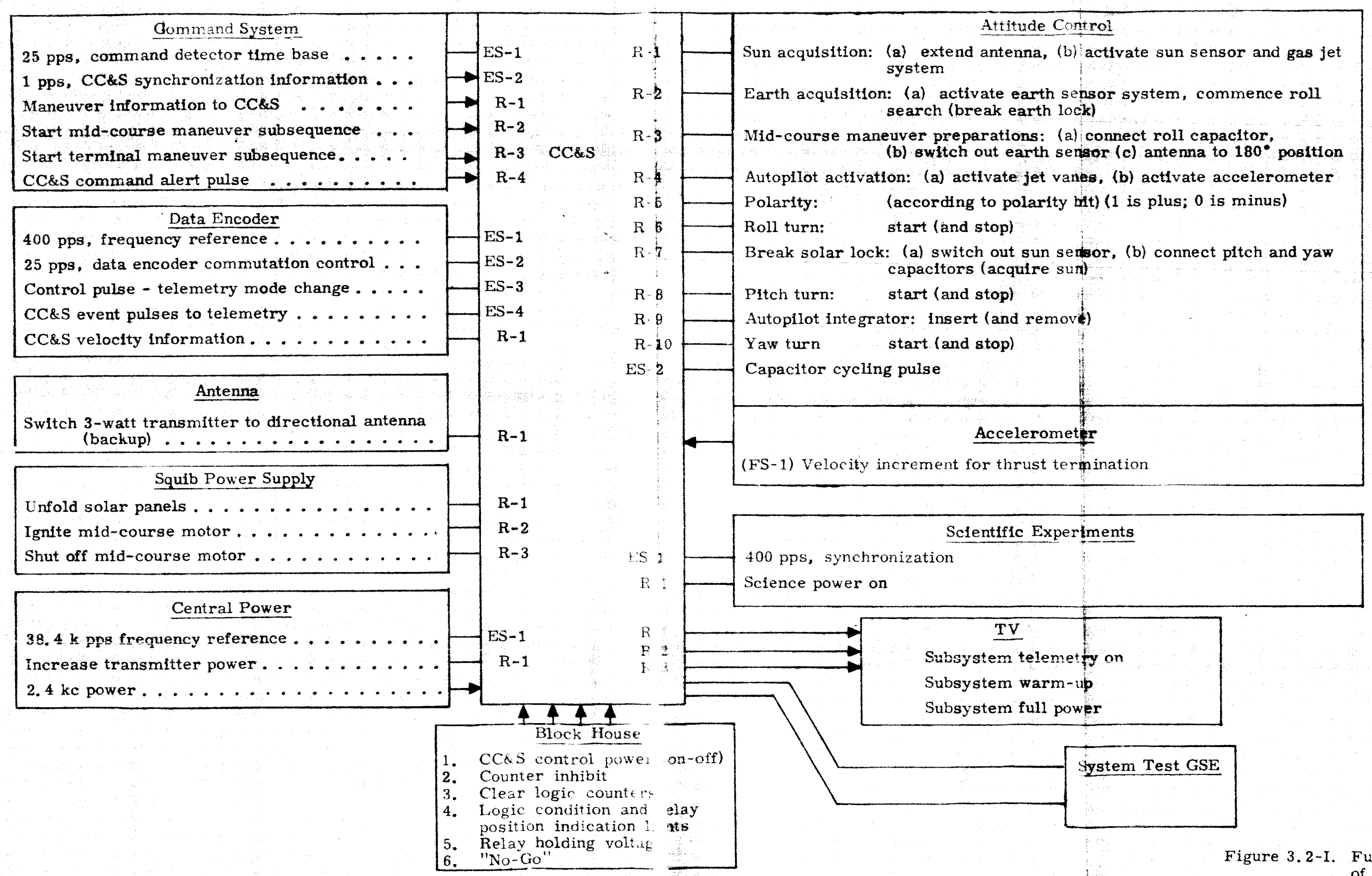

Figure 3.2-I. Functions of the CC&S

3.2.1.3.1 Wave Shape for Scientific Data Synchronization

(ES-1) 400 pps

+12V

Rise time: $\leq 1.0\ \mu s$
Fall time: $\leq 350\ \mu s$
Duration: $1000 \pm 300\ \mu s$

3.2.1.4 Command System

a. (ES-1) 25 pps, command detector time base

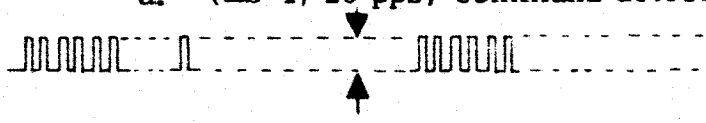

6.0V

Rise time: $\leq 1.0\ \mu s$
Fall time: $\leq 350\ \mu s$
Duration: $1000\ \mu s \pm 300 \mu s$

b. (ES-2) 1 pps, CC&S synchronization information

(CLOSE SWITCH)
(OPEN SWITCH)

Sync Pulses

Rise time: $\leq 5.0\ \mu s$
Fall time: $\leq 5.0\ \mu s$
Duration: 5.0 to 15 ms

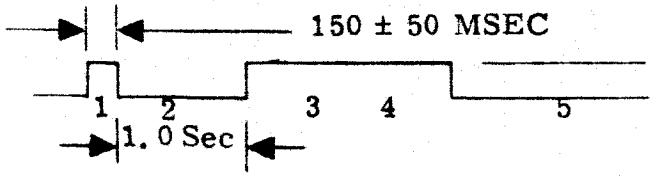

(CLOSE SWITCH-BINARY ONE)
(OPEN SWITCH-BINARY ZERO)

Note: 1st bit time is less than the normal one second.

Information Levels

c. (ES-3) CC&S Command Alert Pulse

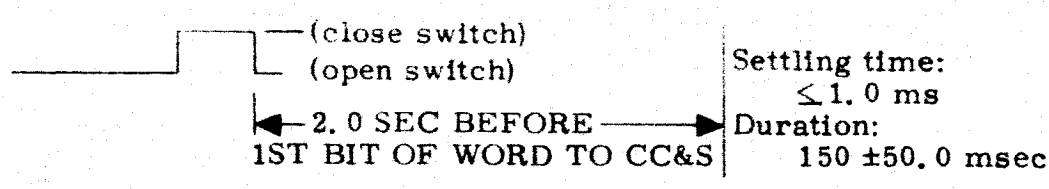

d. (R-1) Maneuver information to CC&S

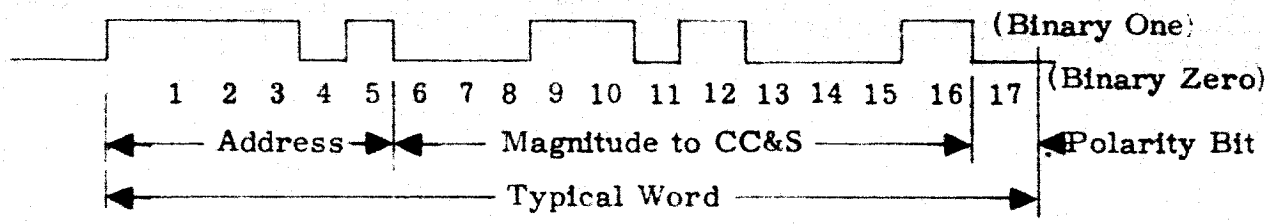

Bit rate: 1 bit/sec

Information: Non-return to zero impedance levels

Total word length 17 bits

(1) Magnitude - 11 bits

(2) Address - 5 bits

(3) Polarity - 1 bit (Binary "1" is plus; binary "0" is minus)

Command Word Address

Mid-course		Terminal Maneuver	
(1) Roll	10101	(1) First pitch	10011
(2) Pitch	11101	(2) Yaw	01011
(3) Velocity increment	00011	(3) Second pitch	11011

Address: Least significant bit on left (#1)
Magnitude: Weighted to 1.0 second in time and 0.1 ft/sec in velocity increment
Least significant bit on left (#6)

e. (R-2) Start mid-course maneuver subsequence

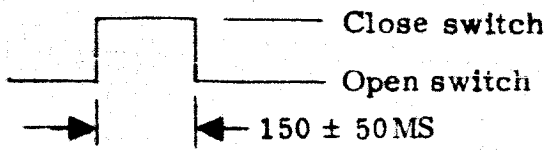

Relay settling time: ≤1.0 ms

Duration: 150 ± 50 ms

f. (R-3) Start terminal maneuver subsequence

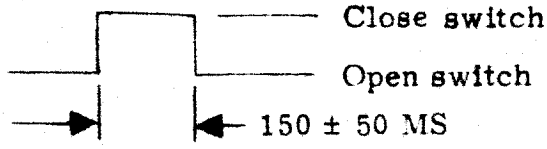

Relay settling time: ≤1.0 ms

Duration: 150 ± 50 ms

3.2.1.5 Data Encoder

a. (ES-1) 400 pps, Frequency Reference

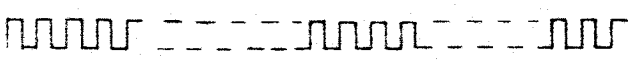

Rise time: ≤ 1.0 μs
Fall time: ≤ 350 μs
Duration: 1.0 ms ± 30%

b. (ES-2) 25 pps, Data Encoder Commutation Control

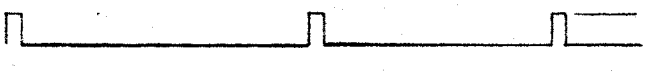

Rise time: ≤ 1.0 μs
Fall time: ≤ 350 μs
Duration: 1.0 ms ± 30%

c. (ES-3) Control Pulse - Telemetry Mode Change

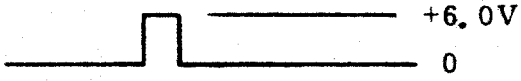

Noise rise duration: 0.5 ms
Fall time: ≤ 350 μs
Duration: 1.0 ms ± 30%

d. (ES-4) CC&S Event Pulses to Telemetry

Rise time: ≤ 1.0 μs
Fall time: ≤ 350 μs
Duration: 1.0 ms ± 30%

e. (R-1) CC&S Velocity Information

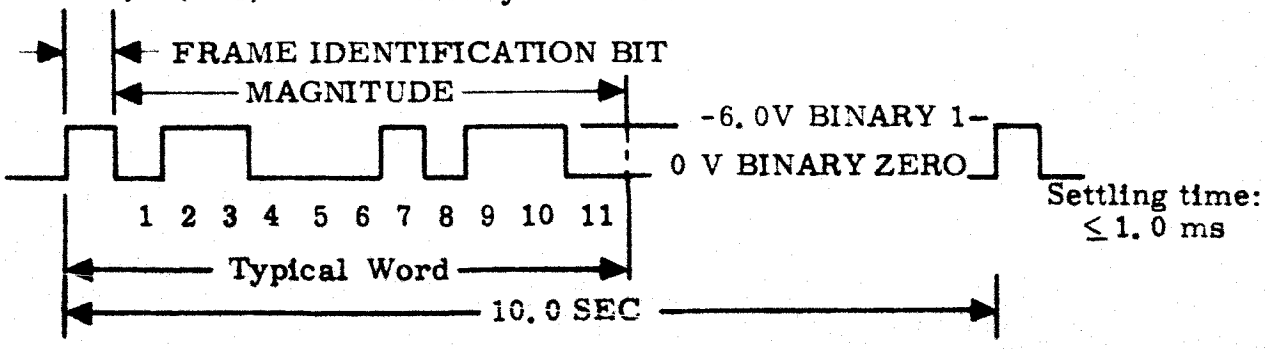

Word sampling rate: once every 10.0 seconds

Bit rate: 2.5 bits/second serially

Word length: 11 bits

Information form: non-return to zero, least significant bit #1, resolution 0.1 ft/sec

Signal range: 0 to 204.7 ft/sec

Weighting: coded sequence

3.2.2 Telemetry

The CC&S shall supply telemetry information which will indicate CC&S operation. Event pulses (paragraph 3.2.1.5 d.) are to be supplied to the data encoder at the times shown in table 3.2.2-I. While several events may take place at an indicated time, only one event pulse may be expected. Table 3.2.2-I indicates the discreet times at which the event pulses may be expected.

✱ Table 3.2.2-I. Telemetry Event Channel Times

Time	Event
1. A - 1 min	Clear and counting verification
2. A + 23 min	Increase transmitter power
3. A + 24 min	Science power on
4. A + 48 min	Unfold solar panels
5. A + 51 min	Sun acquisition (turn on A/C dc power)
6. A + 3 hrs 31 min	Earth acquisition (turn on A/C 1Ø 400 cycle power)
7. A + 4 hrs 1 min	Event indication (not applicable to mission)
8. A + 4 hrs 2 min	Event indication (not applicable to mission)
9. A + 15 hrs 31 min (approx)	Capacitor cycling pulse (receipt of roll address)
10. A + 16 hrs approx (B)	Initiate midcourse maneuver
11. B + 5 sec	Start roll angle turn
12. A + 16 hrs 6 min	Turn on TV subsystem telemetry; switch to directional antenna, (backup)
13. B + 5 to 455 sec	Stop roll angle turn
14. B + 9.5 min	Break solar lock, start pitch angle turn
15. B + 9.5 to 24.5 min	Stop pitch angle turn
16. B + 26.5 min	Start midcourse motor
17. B + 26.5 to 28.3 min	Midcourse motor shut-off
18. B + 30 min	Shut off autopilot, start sun acquisition
19. B + 58 min	Start earth acquisition
20. B + 2.5 hrs	Event indication (not applicable to mission)
21. A + 64.5 hrs (approx)	Capacitor cycling pulse (receipt of 1st pitch address)
22. A + 65 hrs (approx) (C + 5 sec)	Initiate terminal maneuver, start 1st pitch turn
23. C + 5 to 455 sec	Stop 1st pitch turn
24. C + 9.5 min	Start yaw angle turn
25. C + 9.5 to 19.5 min	Stop yaw angle turn
26. C + 21.5	Start 2nd pitch turn
27. C + 21.5 to 29 min	Stop 2nd pitch turn
28. C + 21 min 46 sec	Event indication (not applicable to mission)
29. C + 40 min	TV warmup
30. C + 45 min	TV full power (back-up)
31. C + 1 hr 4 min	Event indication (not applicable to mission)
32. C + 1 hr 40 min	Reacquire sun (in event of lunar miss)

Note: A = Time of launch

B = Time of initiation of midcourse maneuver

C = Time of initiation of terminal maneuver (55 minutes before lunar impact)

3.2.3 TV Subsystem and Squib Power Supply

These operations require switching functions as indicated under 3.3.

3.3 Functional Chronological Requirements

The order in which the CC&S receives the above inputs, performs switching operations and provides the required waveforms as shown in table 3.3-I.

3.3.1 Prelaunch - Launch

The CC&S is controlled from and gives logic states and relay position information to a block-house launch console. Before spacecraft power is turned on (about A-180 minutes), GSE control power is applied to the CC&S, the counter is inhibited, logic and relay circuits are cleared and this initial condition is observed in the block-house. CC&S power comes on with spacecraft power, and the oscillator and divider circuits are also started simultaneously. Timing pulses are supplied to all subsystems getting a frequency reference at this time.

At A-2 minutes the CC&S counter is started in order to obtain an indication that it is operating before the vehicle is committed to flight. It should be noted that, in computing the preset event times stored in the memory, that the times in table 3.3-I are referred to launch time. Therefore, since the CC&S sequence starts two minutes early, all memory times must be increased by this nominal time from CC&S to lift-off.

To ensure that the missile lift-off time and the CC&S lift-off time occurs within ±30 seconds, the CC&S must be equipped with a counter inhibit input that is used to hold the CC&S time during holds in the countdown occurring after the CC&S is started. In case the countdown time is set back before A-2 minutes, the CC&S must be capable of being reset.

Not all words in the memory need to be timed from lift-off. All preset times in the mid-course and terminal maneuvers will be timed from the receipt of a ground "execute" command to start the maneuvers. All commanded turn times and the velocity increment will be radio command stored times and will be used in the mid-course and terminal subsequences.

The CC&S operations after launch and during the first cruise are to be by stored time command as shown in table 3.3-I.

3.3.2 Mid-course Maneuver

The spacecraft will receive a four-word command for the mid-course maneuver. The first three words will contain duration and polarity of turns and velocity magnitude information and will be stored in CC&S memory slots. This information is digital and has the characteristics shown in 3.2.1.4.d. The fourth word of the command is an execute command and is to be sent at the precise time required to start the

Table 3.3-I. CC&S Functional Operations Requirements

	A. LAUNCH, INJECTION AND CRUISE	
1. A > - 180 min	CC&S - GSE Control Power On (precedes spacecraft power turn on), Counter inhibited, Clear logic and/ or relays, (observe reset condition)	Command - Blockhouse
2. A - 2 min	Start CC&S counter	Command - Blockhouse
3. A - 0	Lift-off	Event
4. A + 23 min	Increase transmitter power	CC&S-stored time command
5. A + 24 min	Science power on	CC&S-stored time command
6. A + 48 min	Unfold solar panels	CC&S-stored time command
7. A + 51 min	Turn on A/C DC power a. Extend antenna b. Activate gas jet system c. Activate sun sensor system d. Commence solar acquisition	CC&S-stored time command
8. A + 81 min	Sun acquisition complete	Event - A/C
9. A + 3 hr 31 min	Turn on A/C 1Ø, 400 cps a. Activate earth sensor system b. Start roll search command	CC&S-stored time command
10. > A + 3 hr 31 min	Earth sensor attains light signal a. Stop roll search b. Start hinge servo	Event - A/C
11. A + 4 hr	Earth acquisition complete	Event - A/C
12. A + 16 hr, 6 min	TV subsystem T/M on; switch to directional antenna (back-up)	CC&S sequence command
	B. MIDCOURSE MANEUVER	
13. A + 15.5/39.5 hr	From midcourse tracking and correction computation, transmit midcourse maneuver roll and pitch duration and impulse magnitude information	Ground command to the CC&S
14. A + 15.5/39.5 hr+	A/C capacitor cycling pulse receipt of roll address	Ground address command to CC&S

* Table 3.3-I. CC&S Functional Operations Requirements (Cont'd)

15. B (A + 16 hr nom.)	Initiate mid-course maneuver sequence. TM Mode II	Ground command to the CC&S for start mid-course maneuver subsequence
16. B + 5.0 sec	Turn on mid-course autopilot, jet vane actuators, accelerometer. Turn off earth sensor system, (1Ø 400 cps). Connect roll channel capacitor, initiate command polarity, command roll angle turn, provide antenna 180° command.	
17. B + 5 sec to B + 455 sec	Stop roll angle turn, switch to pitch channel	CC&S sequence command
18. B + 9.5 min	Switch out sun sensor signals, connect pitch and yaw channel capacitors, initiate command polarity, command pitch angle turn	CC&S sequence command
19. B + 9.5 to B + 24.5 min	Stop pitch angle turn, switch to roll channel	CC&S sequence command
20. B + 26.5 min	Gate accelerometer into the shut-off computer, command mid-course motor ignition, disconnect autopilot integrator reset	CC&S sequence command
21. B + 26.5 to B + 28.3 min	Midcourse motor shut-off (computation)	CC&S sequence command
22. B + 30 min	Turn off mid-course autopilot, jet vane actuators, and accelerometer; stop shut-off computer; switch out yaw, roll, and pitch channel capacitors, provide antenna reposition, commence solar acquisition. Initiate T/M Mode III	CC&S sequence command
23. B + 58 min	Turn on A/C 1Ø 400 cps; activate earth sensor system, start roll search command	CC&S sequence command
24. >B + 58 min	Earth sensor attains light signal; stop roll search, start hinge servo	Event - A/C
25. B + 88 min	Earth re-acquisition complete.	Event - A/C

*

Table 3.3-I. CC&S Functional Operations Requirements (Cont'd)

	C. TERMINAL MANEUVER	
26. A + 64.6 hr (nom.)	Transmit spacecraft turn duration (pitch-yaw-pitch) information	Ground command to the CC&S
27. A + 64.6 hr +	A/C capacitor cycling pulse (receipt of 1st pitch address)	Ground address command to CC&S
28. C + 5.0 sec (A + 65 hr nom.)	Initiate terminal maneuver sequence. Select terminal mode, switch out sun sensor signals, connect pitch and yaw channel capacitors, initiate command polarity, command pitch angle turn.	Ground command to the CC&S for start of terminal maneuver subsequence
29. C + 5.0 to C + 455 sec	Stop pitch angle turn, switch to yaw channel	CC&S sequence command
30. C + 9.5 min	Initiate command polarity, command yaw angle turn	CC&S sequence command
31. C + 9.5 to C + 19.5 min	Stop yaw angle turn switch to pitch channel	CC&S sequence command
32. C + 21.5	Initiate command polarity, command pitch angle turn	CC&S sequence command
33. C + 21.5 to C + 29 min	Stop pitch angle turn, initiate T/M Mode IV	CC&S sequence command
34. C + 40 min	TV warm-up	
35. C + 45 min	TV full power on (back-up)	
36. C+ 1 hr 40 min	Reacquire sun (in event of Lunar miss)	CC&S sequence command

maneuver sequence. A command alert pulse will be sent to the CC&S just before the command information to ensure logic reset to improve reliability.

During the midcourse maneuver, accelerometer information as shown in 3.2.1.1 will be an input to the CC&S. The CC&S will use this digital information to determine the midcourse motor shut-off time. The velocity increment command has a resolution of 0.1 ft/second and a maximum value of 204.7 feet/second. The coded velocity increment in a CC&S register is computed or adjusted during the burning period of the midcourse motor using the accelerometer information and read-out to telemetry. This read-out will start just before ignition to get the stored coded velocity increment command and will end after thrust dies out to get the motor tail-off velocity and accelerometer null offset. The CC&S will read the adjusted coded velocity increment to the data encoder every ten seconds and will feed the data to telemetry at 2.5 bits/second serially as indicated in 3.2.1.5 e.

3.3.3 Terminal Maneuver

The spacecraft will receive a four-word command for the terminal maneuver. The first three words will contain the pitch-yaw-pitch turn duration and polarity information and are stored in CC&S memory slots. The information again is digital having the characteristics shown in 3.2.1.4 d. The fourth word is an execute command and sent at a precise time to start the maneuver. The turn sequences are as listed in table 3.3-I.

Two switching functions, TV subsystem warm-up and TV subsystem full power on take place in the last phase of this maneuver period. These are stored time commands and are given at C + 40 minutes and C + 45 minutes respectively.

✱ 3.3.4 Post Terminal Maneuver

In the event of a lunar miss, a reacquire sun stored time command will be given at C + 1 hr 40 min.

✱ 3.3.5 Ground Tests - GSE

The CC&S is required to operate in conjunction with Ground Support Equipment (GSE) in many system, environmental, and dummy run tests in preparation for launch operations. The GSE either needs or supplies the following functions in addition to the controls and indications described on the launch console:

a. Power for CC&S
b. 1 pps - CC&S time
c. 25 pps - accelerated time (x25) override
d. Reset to B time (initiate midcourse maneuver)
e. Reset to C time (initiate terminal maneuver)
f. Manual control and indication from each relay
g. Manual control of telemetry mode change and indication
h. Manual control and indication of TV subsystem sequences
i. Simulated command information, sync pulses, accelerometer pulses

The CC&S is thus able to function with the GSE prior to launch to determine proper CC&S operation during such control. The GSE uses a tape printer to automatically check out all functions and operations of the CC&S.

3.4 CC&S Timing Accuracy Requirements

The CC&S contains the master time standard or clock by which the spacecraft operations are synchronized and timed. The 38.4 kpps signal is supplied to central power to sync the 400 cps power inverter. The data encoder and scientific experiments are also supplied a 400 cps frequency reference signal. The accuracies required are:

a. Timing

1)	Clock frequency accuracy		0.01% - 3 σ
2)	Lift-off time accuracy (launch time)		±30 seconds
3)	Required time resolution	(a) Start maneuver	±7.0 seconds
		(b) Maneuver turn duration	1.0 second
4)	Maximum time capacity required	(a) Launch sequence	1,000 min.
		(b) Maneuver sequence	10,000 sec.
5)	Velocity resolution required		0.1 ft/sec

b. Radio Command Information

1)	Resolution required for commanded turn duration		1.0 second
2)	Maximum required turn duration		900 seconds
3)	Polarity		±
4)	Input data rate		1 bit/second
5)	Start maneuver accuracy	(a) Midcourse	±5 minutes
		(b) Terminal	±7 seconds

3.5 Parameters and Ranges of Values

3.5.1 Memory

a. Word length	17 bits
b. Velocity resolution required	0.1 feet/second
c. Maximum velocity capacity	204.7 feet/second
d. Memory capacity	
1) Preset event times required	13 words
2) Radio command storage required	4 words
e. Time resolution required	1.0 second

✲ 3.5.2 Radio Command Information

a. Velocity increment, resolution required	0.1 feet/second
b. Maximum velocity increment required	204.7 feet/second
c. Polarity	None

3.5.3 Accelerometer

Average accelerometer rate < 25 pps

3.5.4 Design Restraints

a. Power - The CC&S will be supplied with the following power:

11 ±2 watts
2.4 kc - 26V (RMS) ±3%
Frequency limits ±0.1%
Power factor: 0.9 (leading or lagging)
Form factor: 1.05
Overload protection at 150% load; in again at 110% load

b. Volume - The CC&S shall be packaged in one-half of a standard case. The maximum dimensions are 6-1/8 x 6-3/16 x 12 inches.

c. Weight - The CC&S shall not weigh more than the weight allotted in the Design Parameter Functional Specification, RL-4-120.

d. Wiring - The CC&S shall be electrically isolated from other subsystems by relays, isolation transformers, etc.

3.6 Error Sources and Accuracy Requirements

For reference the resulting errors are given for some of the related tolerances.

Error Source	Required 3σ accuracy	Result max. error
(1) Clock Frequency	0.01%	0.04° pointing
(2) Turn Time Resolution	±0.5 sec.	0.12° pointing
(3) Velocity Computation	0.2 f/s max.	7.6 miles miss

(Insert in Spacecraft Design Specification Book)

APPROVED:

System: M. R. Mesnard

Subsystem: V. Anthony

JET PROPULSION LABORATORY

Spec. No. RL-4-420 A
15 May 1962

SUPERSEDES:
RL-4-420
22 January 1962

✱ DENOTES CHANGE

FUNCTIONAL SPECIFICATION
RANGER P53 THROUGH P56 (RA 6, 7, 8, 9)
SPACECRAFT FLIGHT EQUIPMENT
ATTITUDE CONTROL SUBSYSTEM

1.0 SCOPE

This specification describes the functions performed by the RA 6, 7, 8, 9 spacecraft Attitude Control Subsystem during prelaunch, launch, flight, and preimpact operations. Component and operational specifications are listed for this subsystem during its various modes of operation. Specifications are also listed for components which are used in common with the Midcourse Guidance Subsystem and the Autopilot Subsystem.

2.0 APPLICABLE DOCUMENTS

✱ 2.1 The following documents apply to this specification:

SPECIFICATIONS

Jet Propulsion Laboratory

Spacecraft Design Specification Book
RA6, 7, 8, 9

DRAWINGS

Jet Propulsion Laboratory

5-106601	Attitude Control Subsystem, Block Diagram, RA 6, 7, 8, 9

3.0 ATTITUDE CONTROL FUNCTIONAL DESCRIPTION

3.1 Introduction

The RA 6, 7, 8, 9 (follow-on) Attitude Control Subsystem consists of error detectors (optical sensors) electronic signal circuits, and gas jet control components. The autopilot and midcourse guidance subsystems are interconnected to share attitude control circuits. Figure 3.1-1 shows this relationship in block diagram form; table I explains the operation. Sun and earth sensors determine the spacecraft attitude and generate the error signals to align the spacecraft properly with respect to the Sun and Earth. A switching amplifier circuit is used to establish a limit cycle mode of attitude control. The switching amplifiers control ten valves and reaction jets about the spacecraft pitch, yaw, and roll axes in a cold gas (nitrogen) expulsion subsystem.

3.2 Design Objectives

The Attitude Control Subsystem is designed to be adaptable to any programmed lunar trajectory by proper selection of the antenna hinge angles (see hinge axis control portion of block diagram, figure 3.1-1) and operation of the roll and hinge overrides. The roll and hinge override command feature also provides the capability of partially salvaging the mission in the event of gross trajectory errors.

Simplicity has been given a very high priority in the design of the Attitude Control Subsystem to maximize the likelihood of mission success. To achieve simplicity the following restraints have been established:

a. There will be no premaneuver mode. Limit cycle size changes will be made for the pitch and roll control only during commanded turn mode.

b. There will be no signal switching between the autopilot and the cruise attitude control subsystem.

c. The cruise attitude control subsystem need not be turned off during autopilot operation.

d. There will be no extra switching to provide rapid sun acquisition or to provide modified dynamic characteristics for the command turn or autopilot modes. The required dynamic changes will be provided by the same switching function that removes the optical position signal and inserts the gyro position control, and by multiple taps on a single rate plus position network in each gyro loop.

3.3 Flight Description and Attitude Control Operation

A flight begins for the Attitude Control Subsystem at spacecraft and Agena separation. The subsystem has completed prelaunch checks before lift-off and at injection only the gyros are activated. The spacecraft is tumbling and will continue until the attitude control subsystem is activated. Next the solar panels are opened at A+48 minutes and the tumbling rate slows. (A+0 is time of launch, see RL-3-110).

The "acquire sun" command is given by the Central Computer and Sequencer (CC&S) at A+ 51 minutes. The directional high-gain antenna is extended, the gas jets and sun sensors are activated, and the solar acquisition sequence starts. The spacecraft first eliminates the initial tumbling rates and then, as part of the same process, when the rate feedback voltage drops below that of the saturated position sensors, the vehicle automatically turns to face the Sun. Eliminating the tumbling rates require a period of 15 minutes maximum and uses less than one-half pound of the 2.64 pound nitrogen capacity. Turning to face the sun takes 22 minutes maximum.

At A+3.5 hours, the CC&S gives the Attitude Control Subsystem the "acquire-earth" command. The command activates the earth sensor and introduces a 3.5 milliradians/second roll rate. The directional high-gain antenna is in the acquisition hinge position following the A+51 minutes command. Within 30 minutes, the Earth enters the field of view of the earth sensor and the Earth is acquired. If the Moon should be acquired first, the roll and/or hinge override commands must be given. The spacecraft then rolls, gives up the Moon and acquires the Earth. The Earth will be acquired within four hours after injection for P53, 54, 55, 56.

The cruise mode is established when the Earth is acquired. In the cruise mode, the spacecraft performs a limit cycle about each axis. The dimensions of the pitch and yaw limit cycles are ±10 microradians/second and ±2.9 milliradians in the cruise mode. The limit cycle dimensions increase to ±5 milliradians in the commanded turn mode. The dimensions of the roll limit cycle are ±14.7 microradians/second and a gradually decreasing angular limit set for ±5 milliradians at nominal midcourse and thereafter. This gradually decreasing angular limit in the roll limit cycle is due to the gradually decreasing angle which the earth subtends. This roll limit cycle is flown in the cruise and maneuver modes all the way to the Moon. The gas consumption required by the limit cycle is approximately 0.03 pounds per axis. Solar pressure may increase the gas consumption about 50 percent.

At approximately 16 hours after launch, the spacecraft performs the midcourse maneuver on receipt of a radio command. The radio command consists of the velocity increment, the roll and pitch turn durations with polarity and the execute command. The CC&S, on receipt of the execute command, first commands the Attitude Control Subsystem to switch the roll axis from optical to inertial lock, to connect the roll capacitor, to turn on the autopilot and to withdraw the directional high-gain antenna to the exit angle which is 180° from the nested position. This command switches S2 to position 2 and S3 to position 2 as shown in the block diagram, figure 3.1-I.

Table I. Flight Operations

0. Conditions at Launch:
   A. Gyro Power for motors and torquer amplifiers on.
   B. All other attitude control power off.

1. Sun Acquisition:
   A. Turn on remaining A/C power except to
      1) Earth sensor
      2) Acquisition rate command generator
      3) All autopilot components, and
      4) Midcourse motor shutoff system.

2. Earth Acquisition:
   A. Turn on earth sensor and acquisition rate command generator.

3. Antenna Exit:
   A. Step S3 to position 2 regardless of its prior position.

4. Inertia Lock Any Axis:
   A. Command S1 to position 2.
      Note: With the present sun sensor S1P and S1Y will always operate together.

5. Prepare for Earth Loss:
   A. Reverse Step 2.

6. Command Turn Any Axis:
   A. Turn on calibrated rate command generator in proper direction.
   B. Reverse Step 6A after allotted time.

7. Prepare for Midcourse Motor:
   A. Turn on autopilot and motor shutoff systems.

8. Midcourse Motor Ignite:
   A. Give ignite command simultaneously with 8B and 8C.
   B. Command S5P and S5Y to position 2 simultaneously with steps 8A and 8C.
   C. Open shutoff gates simultaneously with 8A and 8B.

9. Midcourse Motor Shutoff:
   A. Give shutoff command.
   B. Reverse Step 7A after allowing time for shutoff transient.

10. Sun Reacquisition:
   A. Command S1P, S1Y, and S1R to position 1.
   B. Step S3 one position.

11. Earth Reacquisition:
   A. Same as Step 2A.

12. Hinge Override:
   A. Step S3 one position.

13. Roll Override:
   A. Command S2 and S4 to position 1.

14. Threshold Gain (Logic operation, internal):
   A. Pulse S2 and S4 to position 2

15. Threshold Loss (Logic operations, internal):
   A. Pulse S2 and S4 to position 1.

Switch Operations

S1: Operated solely by the central computer and sequencer (CC&S).

S2: This switch latches in both directions. It is pulsed to position 1 by the threshold crossing detector whenever signal threshold is lost (or when the earth sensor is turned off) and to position 2 whenever threshold is gained providing the earth sensor is turned on). S2 may also be returned to position 1 by the roll over-ride command from the CC&S.

S3: This switch must be in position 1 when sun acquisition power is turned on. The antenna exit command from the CC&S causes S3 to step to position 2 regardless of its prior position. The sun reacquisition command from the CC&S causes S3 to step one position. The hinge over-ride command causes S3 to step one position.

S4: Same as S2.

S5: The ignite command from the CC&S causes S5 to go to position 2.

NOTES:

1. Switches must be in position shown and midcourse shutoff gates must be closed when power is initially turned on.

2. Solid boxes and circles represent control system or other components. Dotted boxes and circles represent vehicle dynamic characteristics.

3. Any mechanization shown is for illustration only and is subject to change by the cognizant engineers without notice.

The calibrated roll turn is switched in at this time for the caluclated roll duration. This duration as well as the other commanded turn durations are determined on the ground in advance from the tracking data and transmitted prior to the maneuver via the ground command and RF link to the CC&S where it is stored. The polarity of the turn is included in the command. At the conclusion of the roll turn duration, the calibrated command rate generator is switched OFF and the spacecraft remains stationary until the next CC&S command is given.

The next CC&S command in the sequence switches the pitch and yaw axes from optical lock to inertial lock. The pitch and yaw capacitors are connected and a pitch turn is performed in a similar manner to the roll turn. The CC&S commands the start of each turn at a fixed time after the receipt of the execute command. The interval between the start time of the turn allows sufficient time for the maximum turn plus two minutes settling time for the turn transients to die out.

The CC&S next ignites the midcourse motor and for simplicity the coasting Attitude Control Subsystem is left ON. While the gas jets on all three axes are probably on continuously during motor burning, there is no harmful effect. The gas consumed is insignificant, and the perturbations to the thrust vector direction and magnitude are small. The midcourse motor is turned off by CC&S command. The required velocity increment is determined from tracking information on the ground and sent to the spacecraft by ground command via the RF link where it is stored in the CC&S in the form of a required accelerometer count. The pulses of the digital accelerometer are counted and the midcourse motor is shut off when the required count is reached. The autopilot remains ON for the shutoff transients to die out.

The CC&S next turns OFF the midcourse autopilot, jet vane actuators, accelerometer, and shut-off computer. The roll, pitch, and yaw capacitors are switched out, the antenna is repositioned, and solar reacquisition is started. Thirty minutes are allowed for solar reacquisition. The CC&S next gives the roll search command for Earth reacquisition. If Earth-Moon ambiguity exists, the roll override command procedure will again be used.

The cruise mode is again established when the Earth is acquired and the Attitude Control Subsystem continues in this mode until the terminal maneuver.

The terminal maneuver is a sequence of single axis turns performed in the order: pitch, yaw, pitch. Again the turn durations are sent to the CC&S in the spacecraft via the RF command loop. On the execute command from the ground, the sun sensors' signals are switched out, the pitch and yaw channel capacitors are connected, and the first pitch turn is started. The roll axis remains in optical lock (earth sensor) with the antenna slaved to the Earth until lunar impact. After the turns, the Attitude Control Subsystem maintains the final spacecraft orientation for photographing the lunar surface.

4.0 REQUIREMENTS ON TRAJECTORIES

4.1 Trajectory Periods

The spacecraft Attitude Control Subsystem design assumes certain trajectory conditions and thus imposes certain restraints on the trajectory and spacecraft design. First, the time periods composing the mission are defined. These time periods are defined relative to launch.

The initial Earth acquisition period is the period of time allotted for initially acquiring the Earth. This time period begins at the "acquire-earth" command, which is set at approximately one hour after the latest time at which the probe enters the sunlight, and it ends at the earliest time at which the range exceeds the minimum range at which satisfactory communication is guaranteed via the omni-directional (low-gain) antenna. These times are taken to mean the worst cases for any trajectory for any of the firing days. For convenience the RA 6, 7, 8, 9 initial Earth acquisition periods are chosen to be identical. The initial Earth acquisition period begins at 3 hours, 31 minutes after launch and ends at approximately 12 hours after launch.

The midcourse maneuver period begins at the time of the earliest possible midcourse turn command and ends at the time of completion of the latest possible Earth reacquisition. These times are taken to mean the worst cases for any of the firing days. For RA 6, 7, 8, 9 the midcourse maneuver period begins at approximately 16 hours after launch and ends approximately 44 hours after launch. This period is not determined by attitude control considerations and the numbers are quoted for reference only.

The terminal maneuver period begins at the time of the earliest possible terminal turn command and ends at the time of completion of the latest possible turn command. These times are taken to mean the worst cases for any trajectory for any of the firing days. For RA 6, 7, 8, 9 the terminal maneuver period begins at approximately 63 hours after launch and ends at approximately 66 hours after launch. This period is not determined by attitude control considerations, and the numbers are quoted for reference only.

4.2 Trajectory - Spacecraft Angular Restraints

The midcourse and terminal maneuver attitude reference accuracy requirements restrict the earth-probe-sun angle to between 45 and 135 degrees relative to the probe-sun line for the entire midcourse and terminal maneuver periods. This region is shown in figure 4.2-1.

The entire lighted portion of the Earth as seen at the probe must be contained within the conical angular range from 35 to 145 degrees by one-half hour before the end of the initial Earth acquisition period and continuously thereafter. This angle is relative to the probe-sun line with the apex at the probe and is indicated in figure 4.2-1 by the dashed lines. The earth sensor field-of-view constraints dictate this angular limitation.

For each mission there must exist a 45 degree conical angular range (figure 4.2-2), within which the Earth tangent-probe-sun angle will lie for at least one-half hour during the initial Earth acquisition period. This restriction is necessary so that there will be one preset acquisition hinge angle for all firing days. This Earth tangent-probe-sun angle must lie in the 45 degree range of values for all trajectories of the mission.

For each mission there must exist a 45 degree conical angular range, (figure 4.2-2), within which the Earth tangent-probe-sun angle will lie during the entire midcourse maneuver period described above. Again the angular range is for all trajectories of the mission. The reason for this restricted angular range is the necessity to preset one reacquisition hinge angle for all firing days and all trajectories.

Another restriction should be mentioned though it would only apply in case of failure of the roll override command. During the initial Earth acquisition period or the reacquisition, of the roll override command is not available, then the angular range of the moon-probe-sun angle must lie at least 25 degrees outside the 45 degree conical angular ranges mentioned above.

5.0 REQUIREMENTS ON SPACECRAFT DYNAMIC CHARACTERISTICS

5.1 Coordinate System Definition

Before stating the spacecraft configuration and dynamic limitations, the existing spacecraft coordinate system used in all mounting and machining, all dimension, alignments, and the tolerances referred to the spacecraft coordinates is reviewed. This information is given in more detail in the Structural Functional Specification.

The spacecraft coordinate system is defined on the basis of two reference planes. The primary reference plane is defined by three of the six spacecraft mounting feet; A, C, and E as shown in figure 5.1-1. The secondary reference plane is the mounting plane of the attitude control assembly. This surface is machined perpendicular to the primary reference plane to within 0.005 inches in 20 inches (0.25 milliradians).

The spacecraft coordinate system consists of three mutually perpendicular reference lines: pitch (X), yaw (Y), and roll (Z), which form a conventional cartesian coordinate system. The roll reference line is defined normal to the primary reference plane with +Z aft, and it passes through the center of the basic bolt circle. The yaw reference line is defined parallel to the reference plane with +Y opposite the directional antenna. The pitch reference line is then defined such as to form a right-hand system. The reference lines intersect at the origin. The origin is located such that the primary reference plane becomes station Z = 500. These definitions are shown in figure 5.1-1.

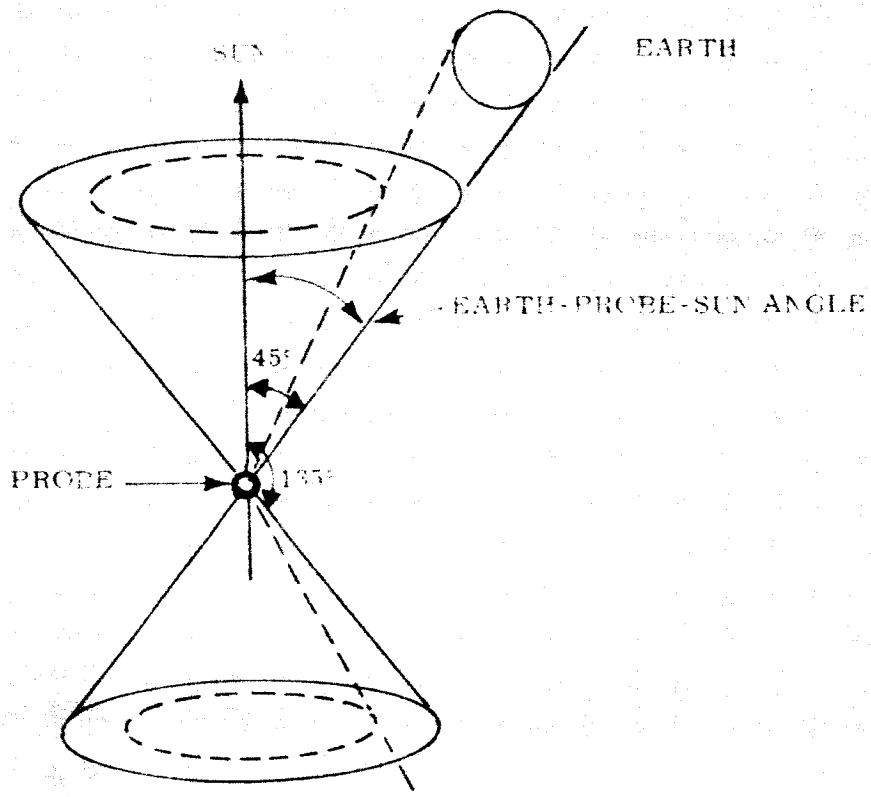

Figure 4.2-1. Definition of Earth-Probe-Sun Angle

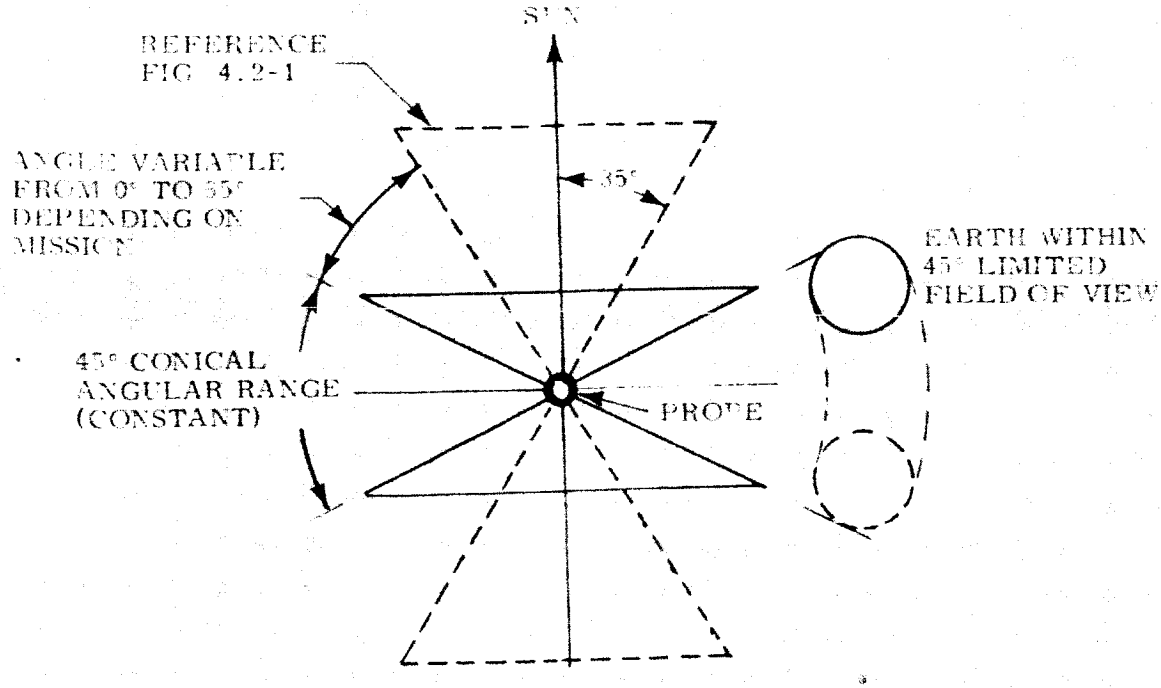

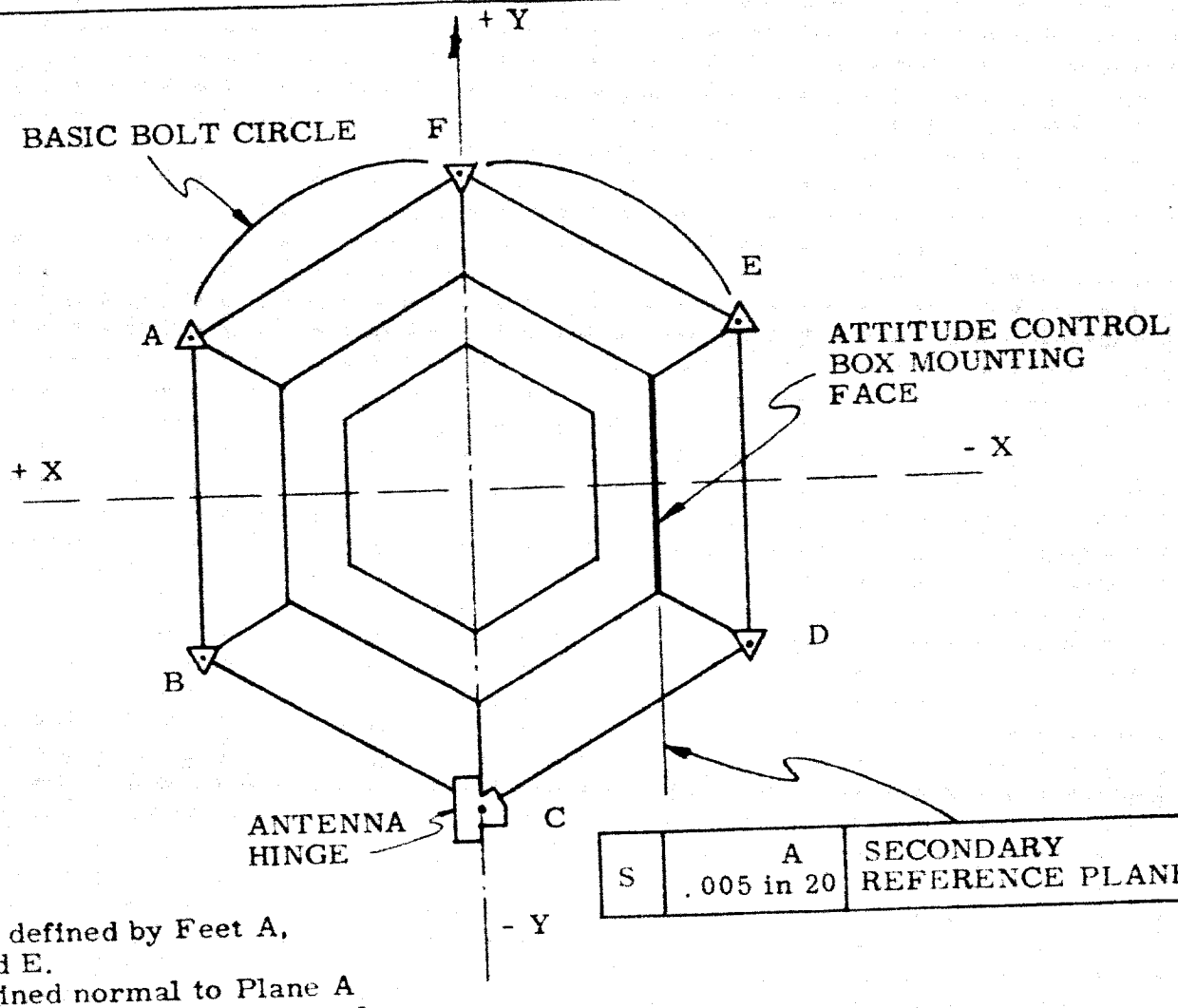

Plane A is defined by Feet A, C, and E.
Z-Z is defined normal to Plane A and pierces A at the center of the basic bolt circle.
Y-Y is defined parallel to both Plane A and Plane S.
X-X is defined perpendicular to both Y-Y and Z-Z.

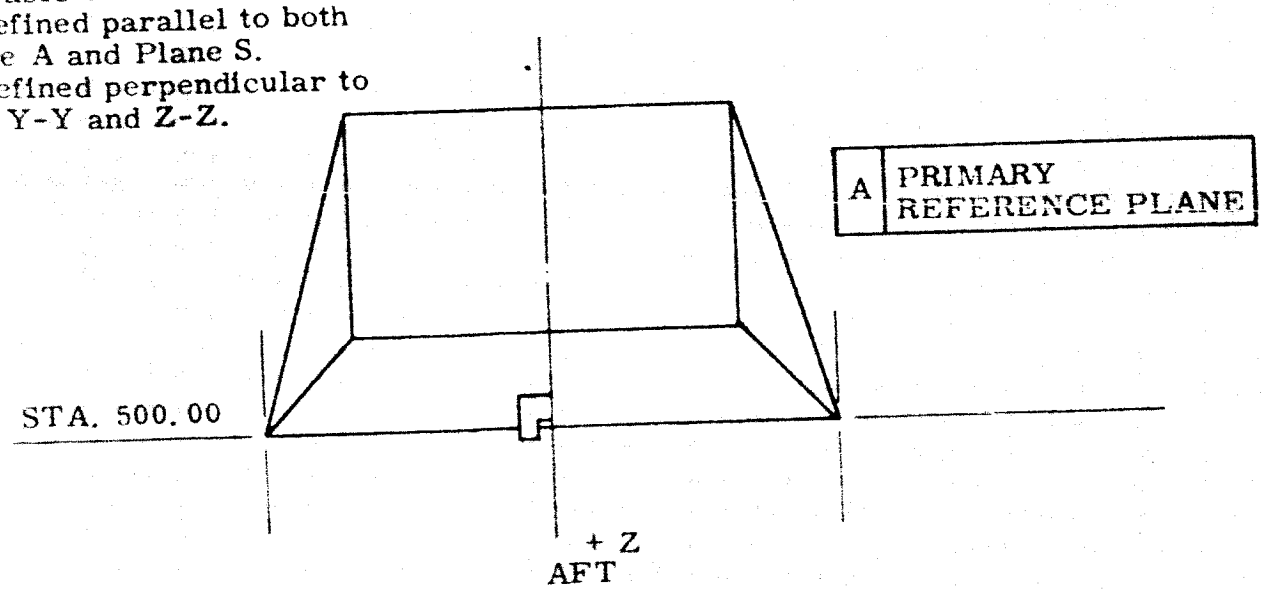

Figure 5.1-1. Spacecraft Reference Planes and Coordinates

Positive pitch, yaw, and roll angles and moments are defined as clockwise when looking from the origin along the positive reference lines. This is a conventional right-hand coordinate system in all respects as shown in figure 5.1-2.

5.2 Dynamic Requirements

The numbers followed by an asterisk are not considered critical and trade-offs are possible. However, any deviation from the specification must be requested.

5.2.1 Spacecraft Configuration Definitions

The specifications are given with reference to the following four possible configurations which the spacecraft has during flight.

1) Configuration One is the configuration after Agena separation but before opening the solar panels or directional (high-gain) antenna.
2) Configuration Two is the configuration after opening the solar panels but before the sun acquisition command. The antenna is nested in this configuration.
3) Configuration Three is the cruise configuration. The solar panels are open and the antenna is at some angle from the nested position.
4) Configuration Four is the midcourse configuration. The solar panels are open and the antenna is 180 degrees from the nested position.

5.2.2 Location of the Center of Gravity

1) The CG must be located within 1 inch* of the roll reference line.
2) The X and Y CG coordinates must be determined to an accuracy of ±0.25 inch maximum for configuration four (midcourse), and 1 inch* maximum for other configurations.
3) The Z CG coordinate must be determined to a $^{+5\ \text{inch}*}_{-1\ \text{inch}*}$ accuracy. The nominal distance from the CG to the center-of-lift of the jet vanes is 23 inches. This figure is specified by autopilot considerations and is given here for reference.

* Specifications followed by an asterisk are not critical and limited compensations are possible, if deviations to this specification are requested in advance. (See also section 6.0).

5.2.3 Moments of Inertia

The moments of inertia are referred to an axis system with the origin at the CG and with axes parallel to the pitch, yaw, and roll reference lines as defined in the Structural Functional Specification, and in section 5.1 of this specification.

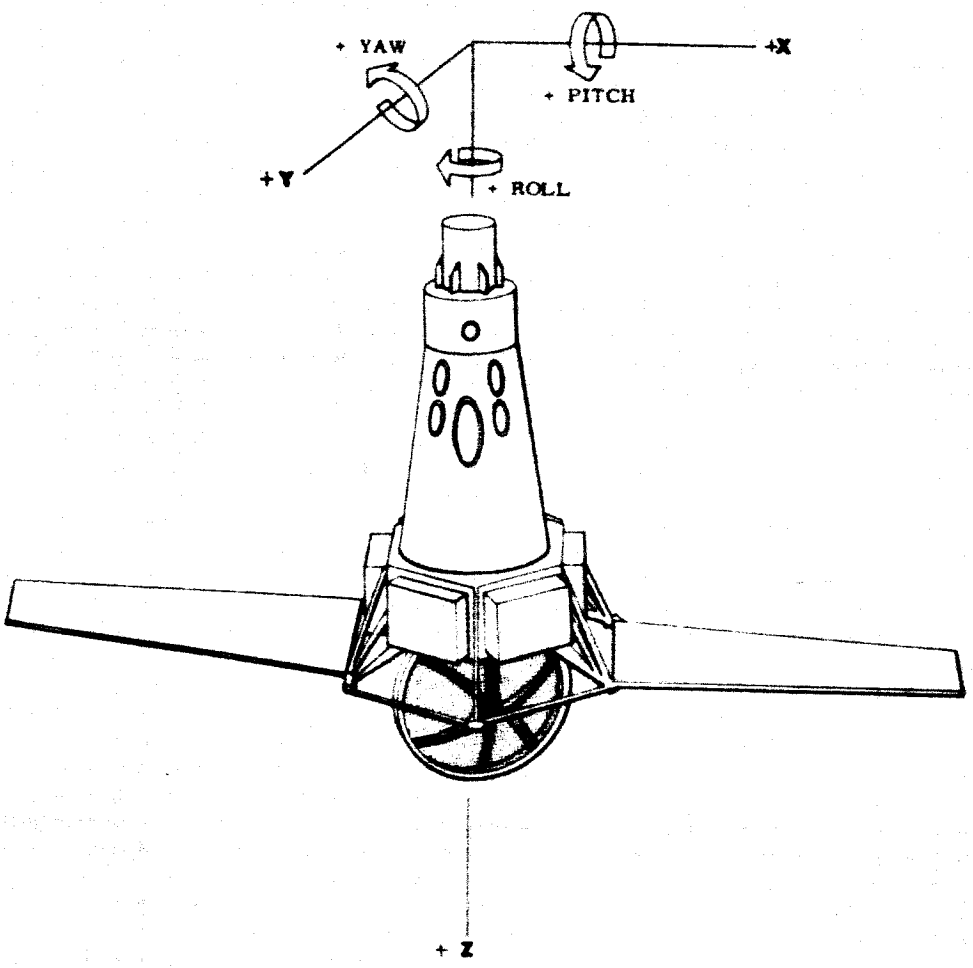

Figure 5.1-2. Angle and Moment Definition

1) The differences between the moments should be as large as possible for all spacecraft configurations.

2) The maximum moment of inertia should be about the same axis for configuration one as it is for configuration two.

3) The three moments of inertia must be determined before flight to an accuracy of ±10 percent maximum for configurations one, two, and four.

4) The three differences between the three moments of inertia must be determined before flight to an accuracy of ± 10 percent maximum for configuration one and two.

5.2.4 Products of Inertia

The products of inertia are referred to an axis system with the origin at the CG and with axes parallel to the pitch, yaw, and roll reference lines as defined in the Structural Functional Specification, and in section 5.1 of this specification.

1) The three products of inertia must be less than 10 percent of the minimum moment of inertia.

2) The three products of inertia must be determined before flight to an accuracy of ±3 percent maximum of the minimum moment of inertia.

6.0 REQUIREMENTS ON ATTITUDE CONTROL COMPONENTS

In the following specifications, the specified values must be met under all environmental conditions. Tolerances not otherwise marked are maximum values. Again, specifications followed by an asterisk are not critical and tradeoffs are possible. Any deviation from this specification must be requested in advance, however.

The mechanical or component alignment tolerances are relative to the spacecraft reference lines as defined in the Structural Functional Specification or in section 5.1 of this specification.

The overall spacecraft pointing requirements are as follows:

1) Pointing error of roll reference line in cruise . . . . 8.7 milliradians -3σ

2) Pointing error of antenna axis in cruise . . . . 5° -3σ

3) Pointing error of thrust vector in midcourse maneuver . . . . 25 milliradians -3σ

4) Pointing error of roll reference line in terminal maneuver . . . . 28 milliradians -3σ

The various component specifications are determined from these requirements.

6.1 Sun Sensor Specifications

The sun sensor subsystem must have a pointing accuracy of 3.5 milliradians and have a field-of-view over the complete sphere about the spacecraft. The sun sensors, consisting of primary and secondary pairs are interconnected to produce these proper error characteristics. These characteristics must lie within the limitations shown in figure 6.1-1.

To explain items in the following specification tables, the two axes sun sensor orientation is shown. The sun sensor location on the two axes consist of primary pairs located on the bus, and two pairs of sensor elements in each secondary sensor located on the solar panels. The sensor elements on the bus, A, F, G, and L, are located as shown in figure 6.1-2. The secondary sensors consist of four sensor elements connected to operate in pairs and to broaden the field-of-view for acquiring the Sun. This orientation is perhaps best shown by electrical connection of the elements as shown in figure 6.1-3. When the earth sensor acquisition signal is given, the circuit to the secondary sensors is opened and only the primary sensors are used in cruise. The error signal characteristic for such a connection is shown in figure 6.1-1. The tolerances for the sun sensor characteristic are given in table II.

6.2 Earth Sensor Specifications

The earth sensor must have a pointing accuracy of ±10 milliradians 3σ in roll, and ±17.5 milliradians 3σ in hinge. An asymmetrical device may, therefore, be used. The earth sensor selected in this application consists of three photomultiplier tubes placed in such a configuration to get asymmetric two axis error characteristics. The two axis coordinate system used with the earth sensor is shown in figure 6.2-1. The field-of-view of each sensor element and the orientation is shown in figure 6.2-2. The sensor hood specification is shown in figure 6.2-3.

The outputs from the three sensors are combined as shown in figure 6.2-4 to obtain the error signal characteristics. The photo sensors have a constant sensitivity across the face of the sensor with a linear sloped sensitivity characteristic around the boundaries as shown in figure 6.2-5. The summation signal (A + B + C) is used for AGC so that the effective error signals are:

$$\text{Roll Error Signal} = \frac{\Delta\,(A + B - C)}{\Sigma\,(A + B + C}$$

$$\text{Hinge Error Signal} = \frac{\Delta\,(A - B)}{\Sigma\,(A + B + C)}$$

The roll error signal is linear ±22.5 milliradians about the axis saturating at greater angles. The hinge error signal is linear ±2.5 degrees about the axis, saturating at greater angles. The slope of the hinge error signal and the saturation level varies with the magnitude of the "C term" or the illumination of the "C" sensor as may be seen by the equation. The tolerances for the earth sensor characteristics are given in table III.

The mechanical alignment of the earth sensor tabulated in table III is dependent upon a build-up of mechanical tolerances. Briefly, these tolerances are as follows: the secondary reference plane (see figure 5.1-1) is also parallel to an axis through the base mounting holes at spacecraft supports C and F within 0.005 inch in 10 inches (0.5 milliradian); the antenna hinge axis (at C) will be parallel to the base reference plane to within 0.68 milliradians and perpendicular to the secondary reference plane to 0.68 milliradians; the total mechanical tolerance in each case is 0.88 milliradians to leave 0.20 milliradians for structural and thermal deformations.

The earth sensor mounting surface will be perpendicular to the antenna hinge axis to within 0.36 milliradians. The total mechanical alignment tolerance is 0.58 milliradian leaving 0.22 milliradian for structural and thermal deformations.

6.3 Attitude Control Gyro and Gyro Loop Specifications

The pitch and yaw gyro loops are shown in detail in the block diagram, figure 6.3-1. The tolerances on various items in the loop are given in table IV.

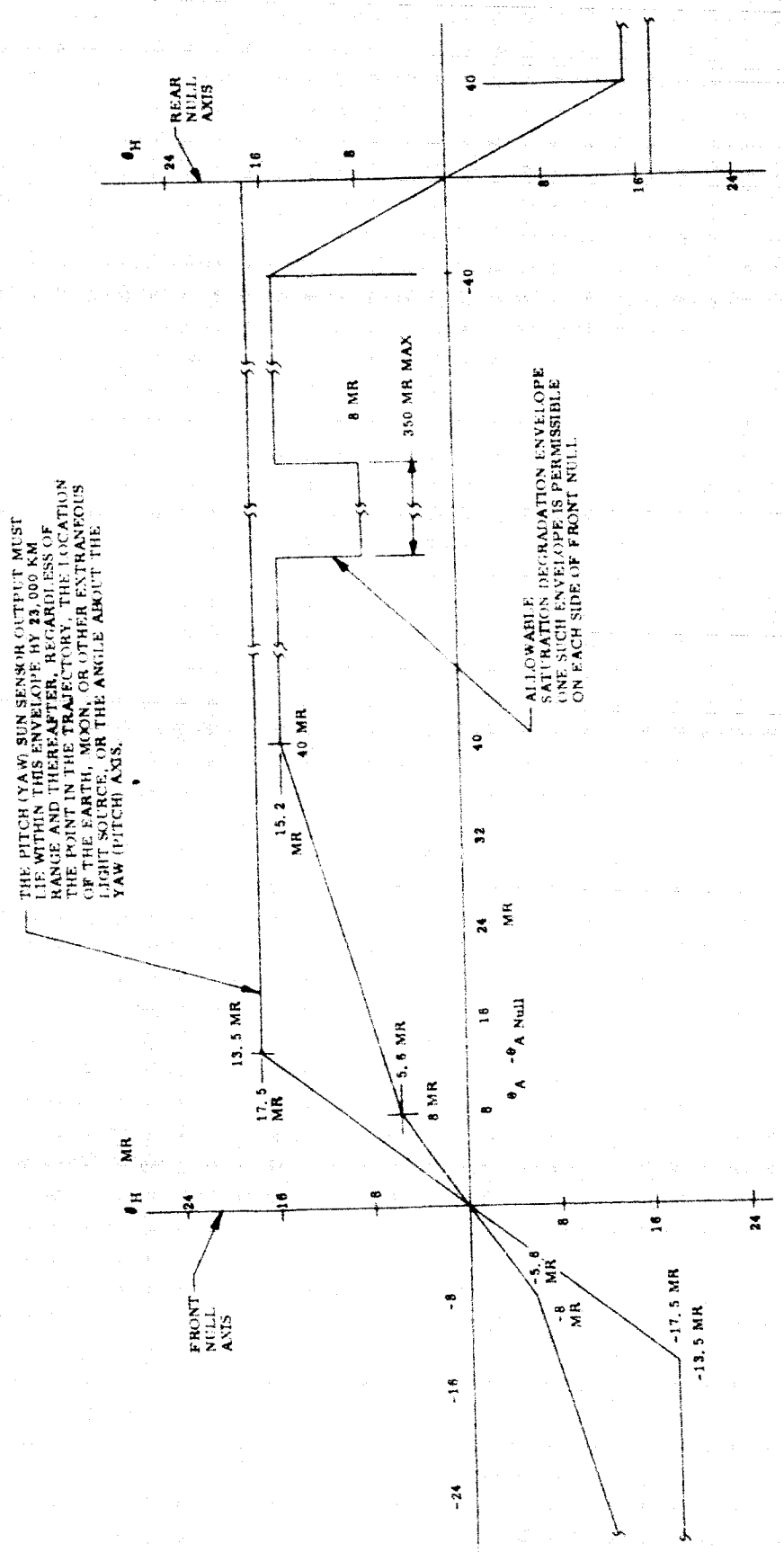

Figure 6.1-1. Sun Sensor Error Characteristic Requirements

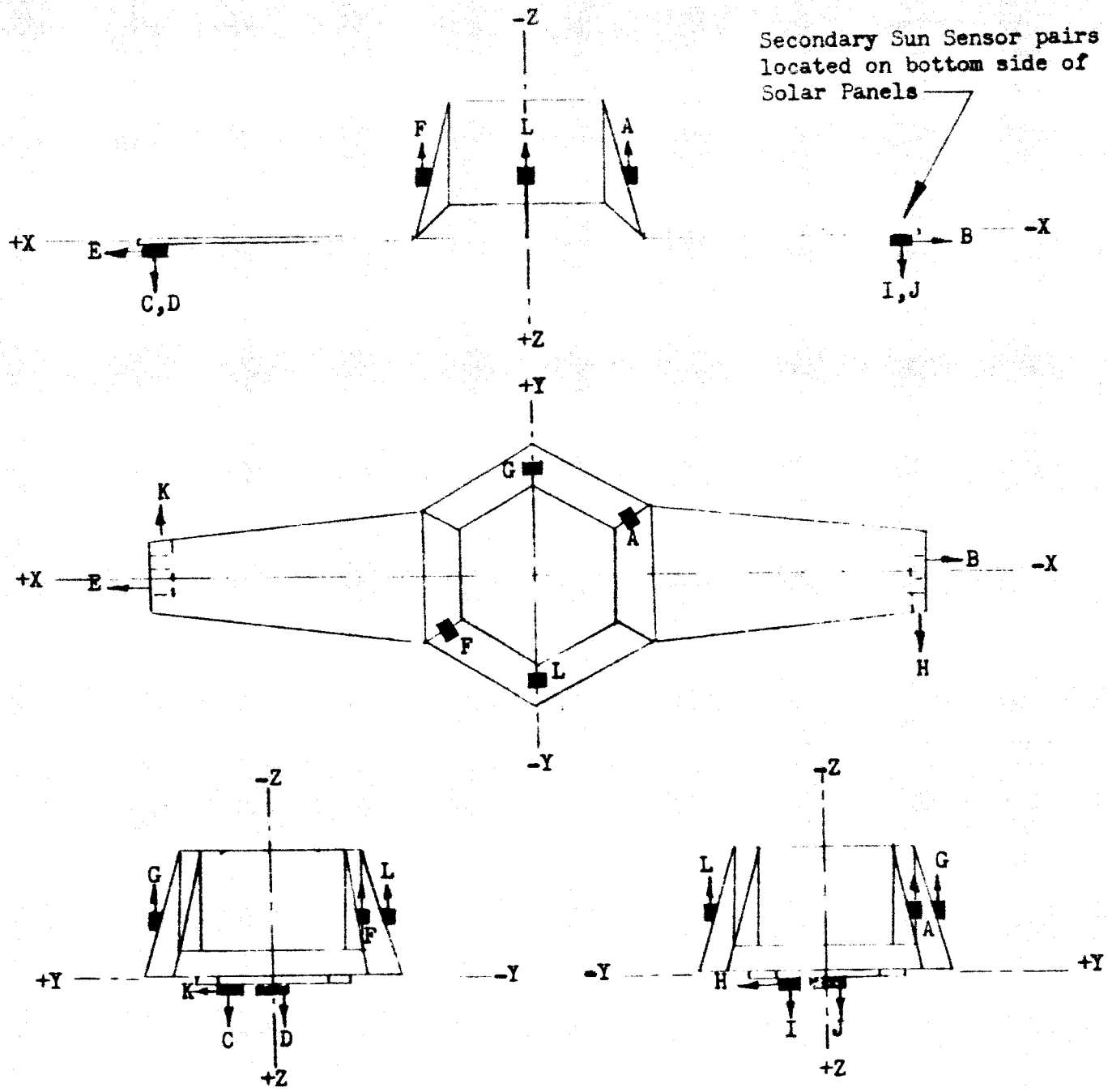

Figure 6.1-2. Sun Sensor Element Orientation

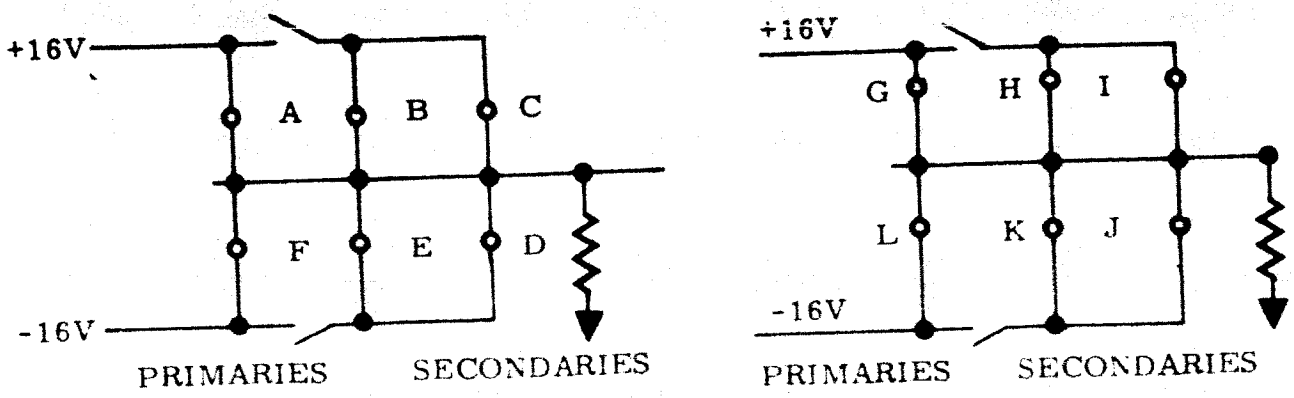

Figure 6.1-3. Sun Sensor Connections

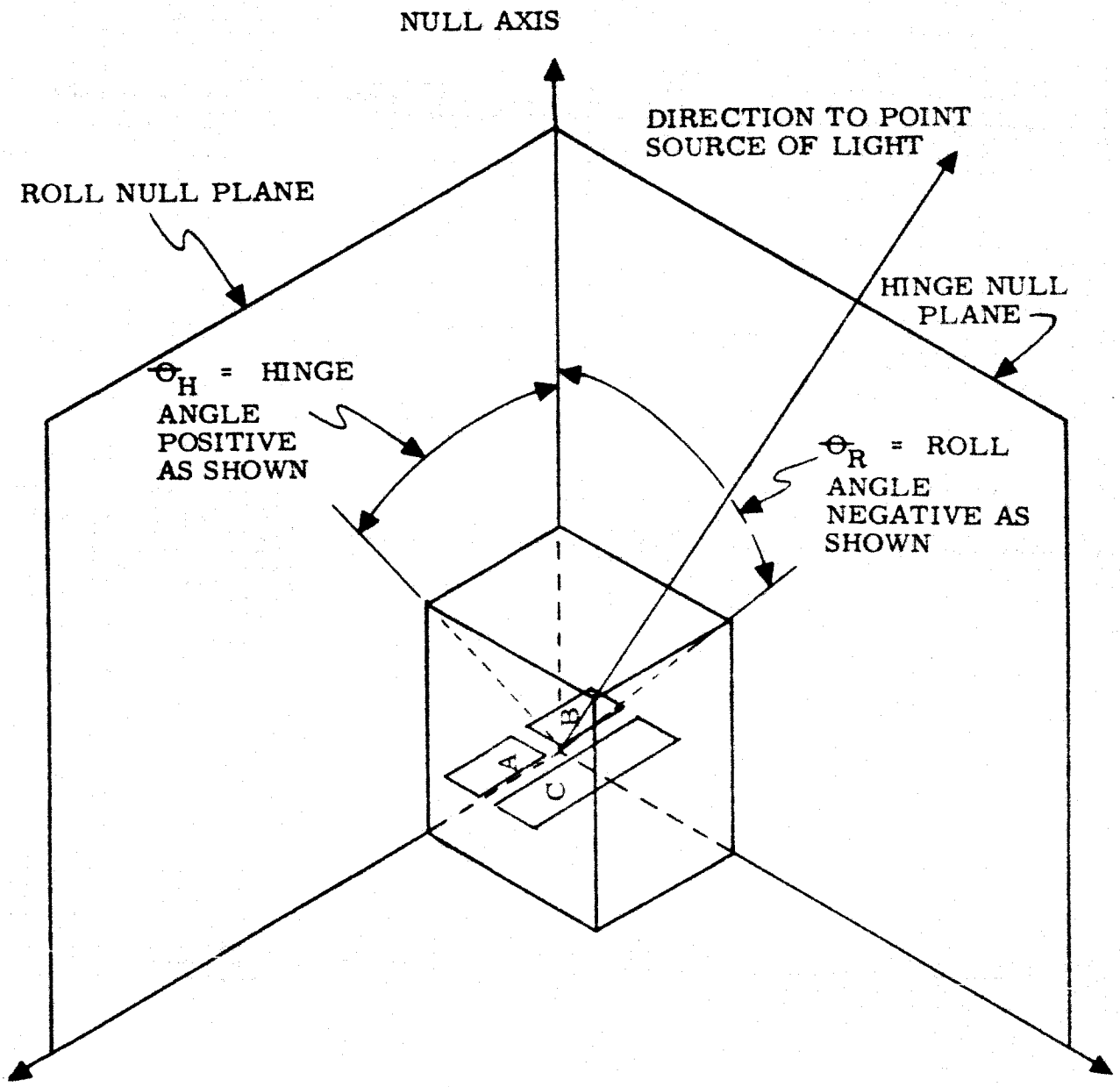

This sketch defines the coordinate system used in the field of view specifications of Figures 6. 2-2 and 6. 2-3.

Figure 6. 2-1. Earth Sensor Error Coordinates

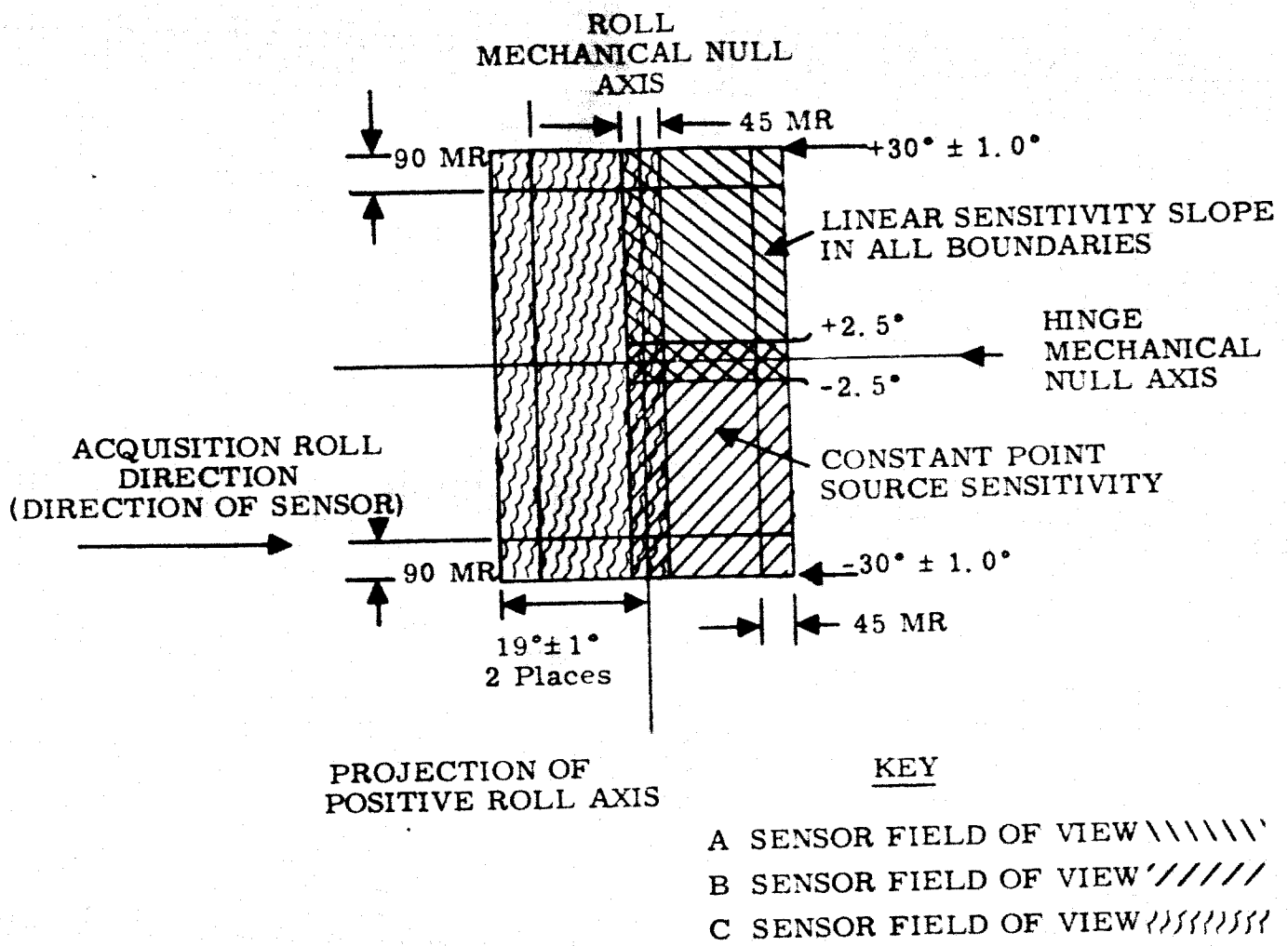

Figure 6.2-2. Earth Sensor Field of View Specifications

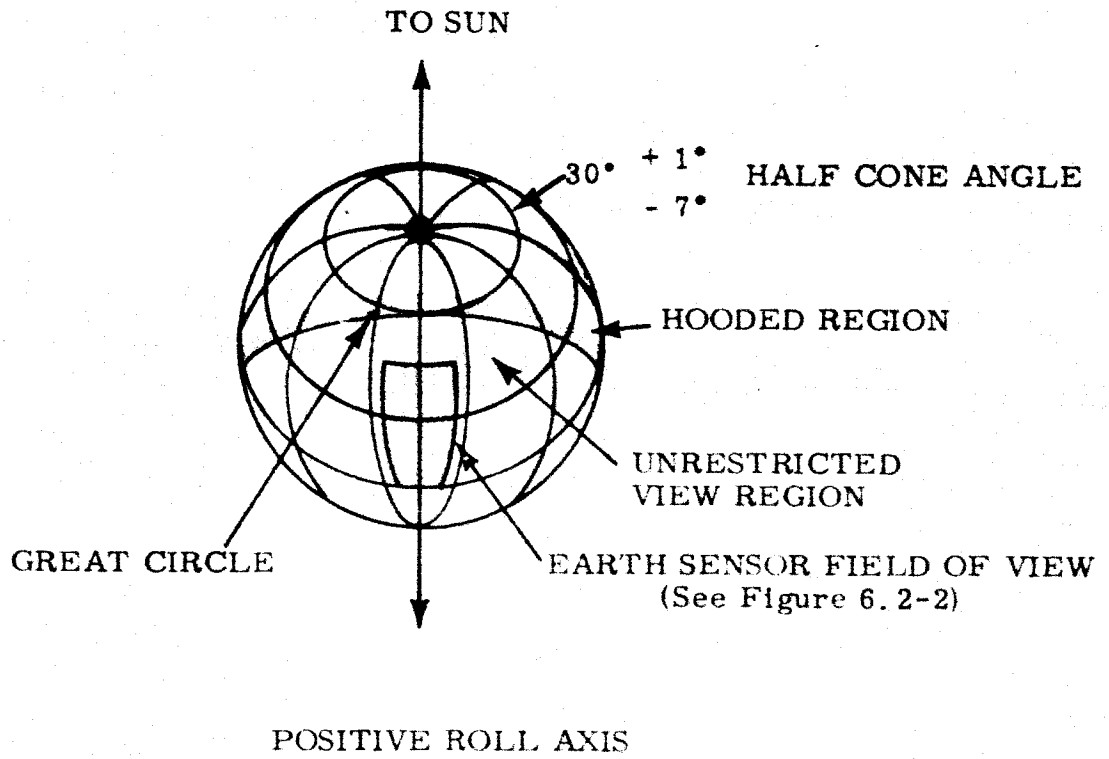

Figure 6.2-3. Earth Sensor Hood Specifications

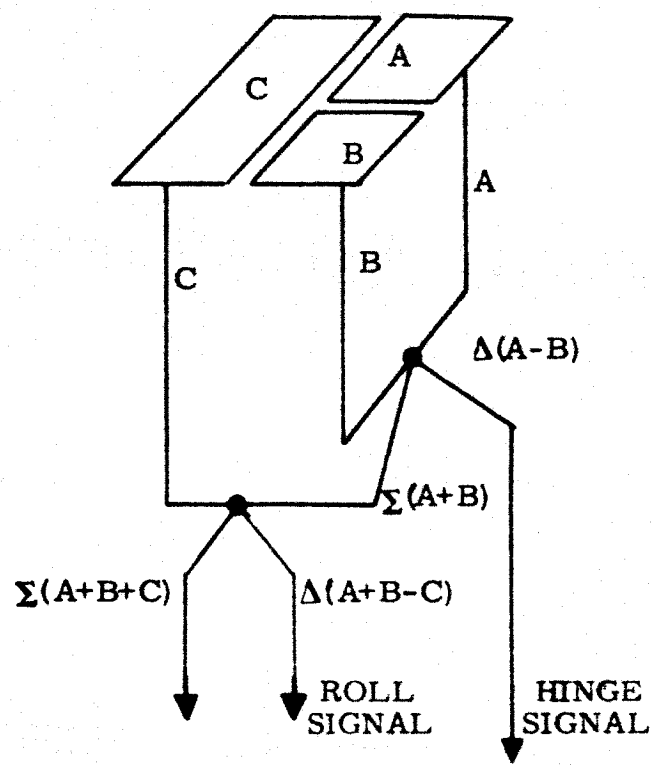

Figure 6.2-4. Earth Sensor Error Signal Logic

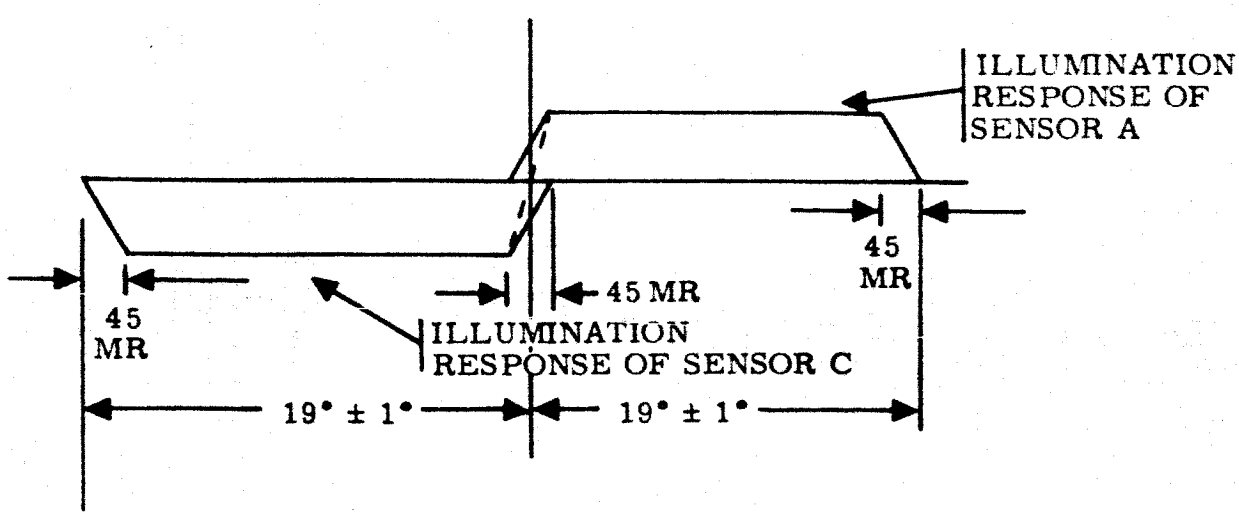

Figure 6.2-5. Earth Sensor Photo-tube Response in Roll (Off Hinge Axis)

Table II. Sun Sensor Characteristics

Quantity	Nominal Value	Tolerance
(1) At midcourse and terminal maneuver		
Mechanical misalignment	Zero	± 2.2 mr 3 σ
Front null electrical offset	Zero	± 2.8 mr 3 σ
(2) Front null electrical offset at other times	Zero	±20 mr*
(3) Rear null electrical offset	Zero	± 20° max.
(4) Linearity	monotonic in the -15 mr to +15 mr range.	± 10% change in slope to ± 2 mr from front null.
(5) Null drift rate	Zero	2 μ r/sec 3 σ
(6) Noise	Zero	0.2 mr peak-to-peak maximum.
(7) Noise slope	1 μ r/sec max. or such that multiple switching at end of limit cycle does not increase design limit cycle velocity.	
(8) Rise time to a step input (5% to 95% of final response)	0.2 sec. max.	
(9) Primary and secondary sun sensor field of view	4π Steradian	Zero (absolute requirement)
(10) Primary sun sensor field of view		
(a) In plane of control (pair)	± 45°	± 5° max.
(b) In plane perpendicular to control plane	± 30°	± 5° max.
(11) Misalignment of null planes to vehicle reference planes	Zero	± 40 mr*
(12) Saturation degradation - See figure 6.1-1. One area of saturation degradation is permissible on each side of front null.		

*Specifications followed by an asterisk are not critical and changes are possible, if deviations to this specification are requested. (See also section 6.0).

Table III. Earth Sensor Characteristics

Quantity	Nominal Value	Tolerance
(1) Roll null offset		
(a) Electrical	Zero	8.0 mr 3 σ
(b) Mechanical misalignment perpendicular to hinge axis	Zero	± 1.73 mr 3 σ
(2) Hinge null offset	Zero	±17.5 mr 3 σ
(3) Linearity		
(a) Roll	Monotonic in -22.5 mr range.	±10% change in slope to ± 2 mr from null.
(b) Hinge	Monotonic in-2.5° to +2.5° range	
(4) Null Drift rate		
(a) Roll	Zero	2 μr/sec 3 σ
(b) Hinge	Zero	2 μr/sec 3 σ
(5) Noise		
(a) Roll	Zero	0.2 mr peak-to-peak max.
(b) Hinge	Zero	1 mr peak-to-peak max.
(6) Noise Slope		
(a) Roll	1 μr/sec max. or such that multiple swotching at end of limit cycle does not increase design limit cycle velocity.	
(7) Rise time to a step input (5% to 95% of final response)		
(a) Roll	0.2 sec max.	
(b) Hinge	0.2 sec max.	
(8) Hinge axis saturation for up to ± 2 mr roll error	28 mr min.	

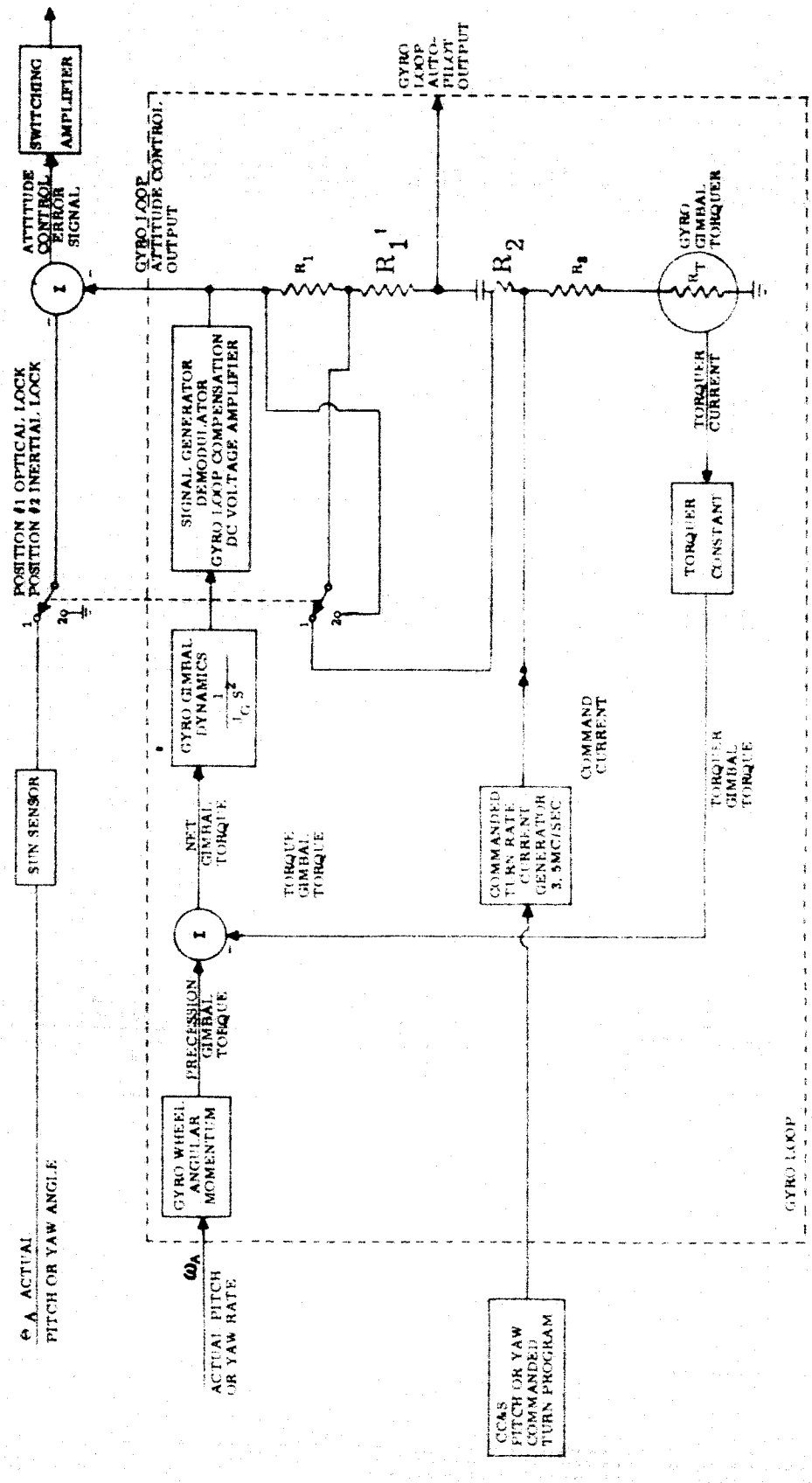

Figure 6.3-1. Gyro Loop Block Diagram

Table IV. Pitch and Yaw Gyro Characteristics

Quantity	Nominal Value	Tolerance
(1) Fixed torque drift after compensation	Zero	4.8 μr/sec 3 σ
(2) (a) Steady state response of spacecraft to turn command	3.5 mr/sec	± 5%
(b) Deviation from calibrated turn response including variations of all components	Zero	±0.3% 3 σ
(3) Gyro Linearity Deviation Monotonic over Range ± 10 mr/sec.		
(a) 0 - 0.5 mr/sec	Zero	±4.85 μr/sec max.
(b) 0.5 - 7.0 mr/sec	Zero	±48.5 μr/sec max.
(c) Calibrated point ±0.1 mr/sec	Zero	±1.5 μr/sec max.
(4) Gyro loop angle storage capacitor random leakage	Zero	5.0 mr 3σ for any turn up to 3150 mr
(5) Saturation turning rate	10 mr/sec min.	
(6) Torquing amplifier voltage saturation	53 mr minimum	
(7) Damping ratio (gyro loop)	0.4 minimum	
(8) $\tau_{GA} \cdot K_\theta$ Product		
(a) Acquisition and cruise mode pitch and yaw axes	3.2 seconds	± 20%
(b) Acquisition and cruise mode roll axis	5.45 seconds	± 20%
(c) Command turn all axis	5.45 seconds	± 20%

(Cont'd) Table IV. Pitch and Yaw Gyro Characteristics

	Quantity	Nominal Value	Tolerance
(9)	GC	3.82 seconds	± 20%
(10)	Null drift rate	Zero	2 μr/sec (or $2/\tau_{GA}$ μr/sec^2) 3 σ
(11)	Noise	Zero	0.2 mr (or $0.2/\tau_{GA}$ mr/sec) peak-to-peak max.
(12)	Noise Slope	1 μr/sec max or such that multiple switching at end of limit cycle does not increase design limit cycle velocity	
(13)	Rise time (from application until 95% of steady state gyro loop output)	100 m sec max.	
(14)	Pitch gyro misalignment in yaw from all sources	Zero	1.53 mr 3 σ
(15)	Pitch gyro misalignment in roll from all sources	Zero	1.53 mr 3 σ
(16)	Yaw gyro misalignment in roll from all sources	Zero	1.53 mr 3 σ
(17)	Yaw gyro misalignment in pitch from all sources	Zero	1.53 mr 3 σ
(18)	Roll gyro misalignment in pitch from all sources	Zero	1.53 mr 3 σ
(19)	Roll gyro misalignment in yaw from all sources	Zero	1.53 mr 3 σ

6.4 Switching Amplifier Specifications

Terms and symbols used in this specification are shown in the figure 6.4-1 block diagram of the switching amplifier. The specified values and the tolerances are given in table V.

*Table V. Switching Amplifier Characteristics

Quantity	Nominal Value	Tolerance
(1) Roll dead zone in acquisition, cruise, and commanded turn:	5.0 mr ±0.5 mr 3 σ	
(2) Pitch and yaw dead zone in acquisition and cruise:	2.9 mr ±0.29 mr	
(3) Pitch and yaw dead zone in commanded turn:	5.0 mr ±0.5 mr 3 σ	
(4) Hysteresis		
(a) Pitch and yaw axis	70 μr	± 50%
(b) Roll axis	160 μr	± 50%
(5) K_θ all axes	1	± 20%
(6) Null offset	Zero	± 1 mr* 3 σ
(7) Null drift rate	Zero	2 μr/sec 3 σ
(8) Noise	Zero	0.2 mr peak-to-peak max.
(9) Noise slope	1 μr/sec. max.	
(10) Rise time (from rapid crossing of switching line to 95% output)	200 millisecond max.	
(11) Fall time (from rapid crossing of switching line to 5% output)	50 millisecond max.	

* Specifications followed by an asterisk are not critical and changes are possible, if deviations to this specification are requested (see also section 6.0).

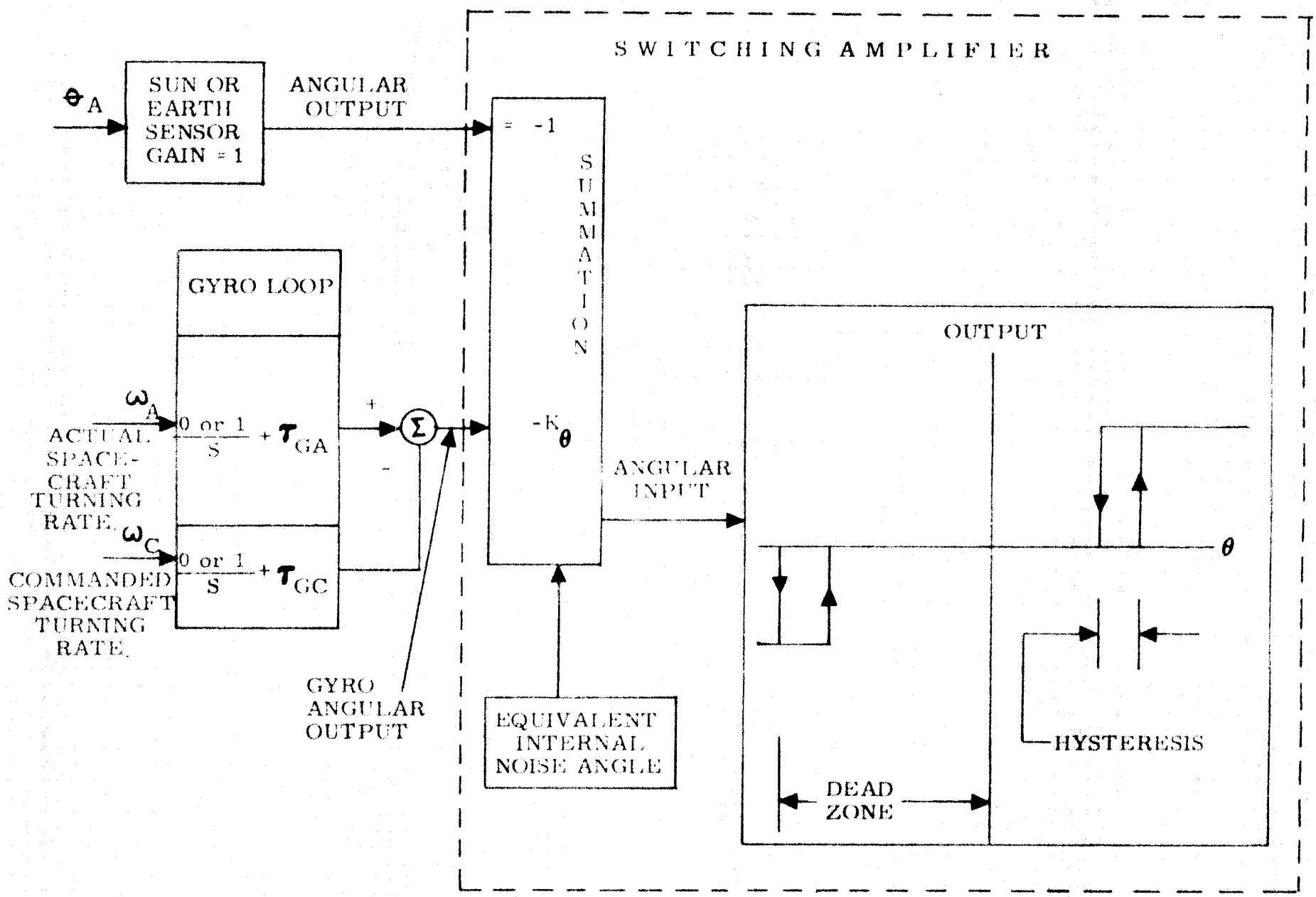

Figure 6.4-1. Switching Amplifier Block Diagram

RL-4-420 A

6.5 Attitude Control Valves and Gas Specifications

The specifications on parameters of the attitude control gas subsystem is given in table VI.

Table VI. Attitude Control Gas Subsystem

	Quantity	Nominal Value	Tolerance
(1)	Acceleration level each axis		
	(a) Steady flow	0.28 mr/sec^2	±20%
	(b) Lockup	0.28 mr/sec^2	+50% -20%
(2)	Opening time (from receipt of electrical signal to full open)	50 m sec. max.	
(3)	Closing time (from loss of electrical signal to full closed)	20 m sec. max.	
(4)	Leakage, total for three axes	0.05 lb./day max.	
(5)	Gas capacity	2.64 lbs. (3 bottles)	
(6)	Product of specific impulse and control arm (each axis)	100 ft-sec. min.	
(7)	Crosscoupling	0.02 $\frac{mr}{sec^2}$ max.	

The antenna hinge angle switch must operate in a cyclic manner but when the reacquisition command is given, it must return to the reacquisition position regardless of any previous position.

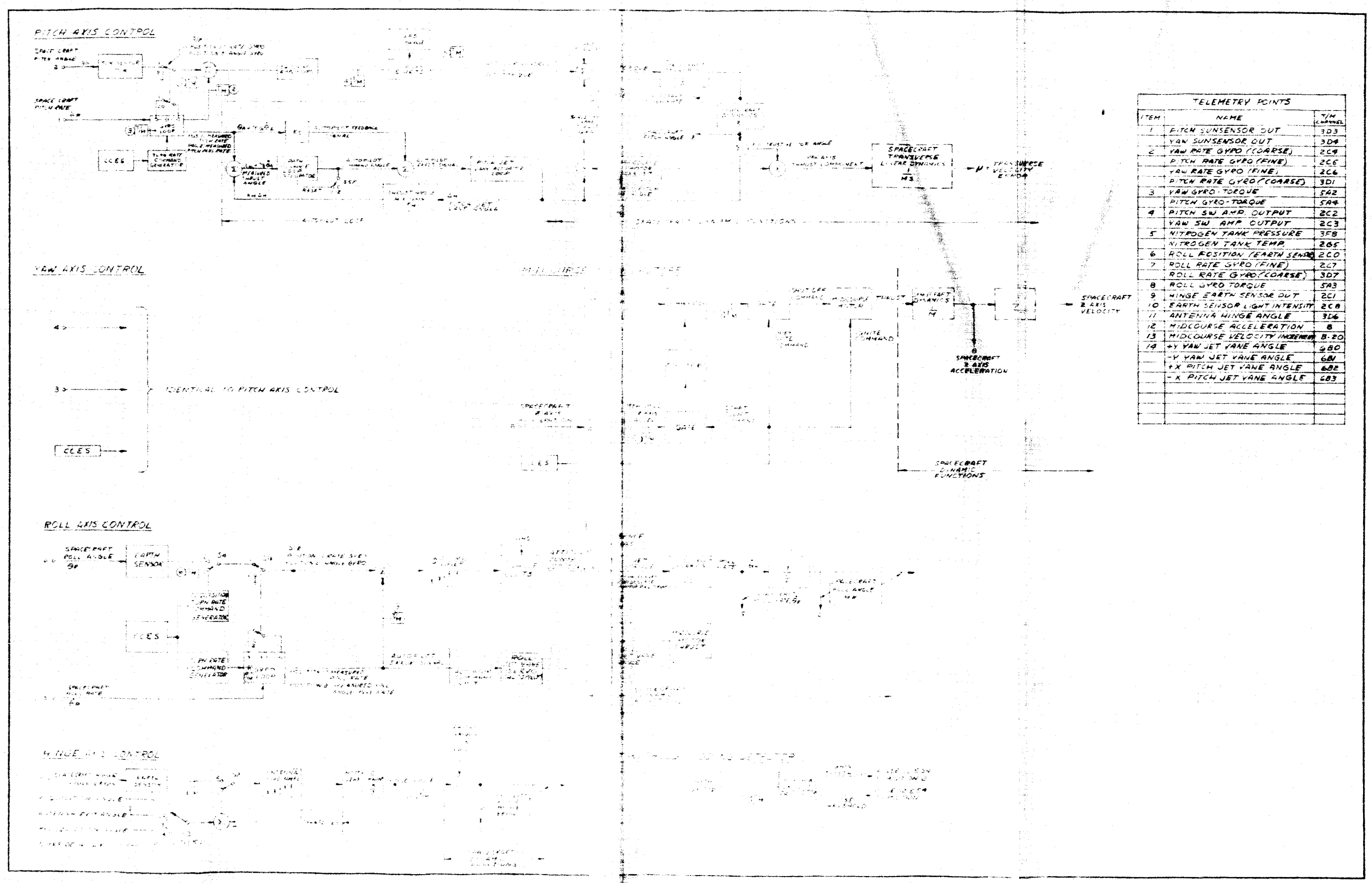

TELEMETRY POINTS

ITEM	NAME	T/M CHANNEL
1	PITCH SUNSENSOR OUT	3D3
	YAW SUNSENSOR OUT	3D4
2	YAW RATE GYRO (COARSE)	2C4
	PITCH RATE GYRO (FINE)	2C5
	YAW RATE GYRO (FINE)	2C6
	PITCH RATE GYRO (COARSE)	3D1
3	YAW GYRO - TORQUE	5A2
	PITCH GYRO - TORQUE	5A4
4	PITCH SW AMP. OUTPUT	2C2
	YAW SW AMP. OUTPUT	2C3
5	NITROGEN TANK PRESSURE	3F8
	NITROGEN TANK TEMP.	2B5
6	ROLL POSITION (EARTH SENSOR)	2C0
7	ROLL RATE GYRO (FINE)	2C7
	ROLL RATE GYRO (COARSE)	3D7
8	ROLL GYRO TORQUE	5A3
9	HINGE EARTH SENSOR OUT	2C1
10	EARTH SENSOR LIGHT INTENSITY	2C8
11	ANTENNA HINGE ANGLE	3D6
12	MIDCOURSE ACCELERATION	8
13	MIDCOURSE VELOCITY INCREMENT	8-20
14	+Y YAW JET VANE ANGLE	680
	-Y YAW JET VANE ANGLE	681
	+X PITCH JET VANE ANGLE	682
	-X PITCH JET VANE ANGLE	683

9712-3430

Fig. 8.1-1

(Insert in Spacecraft Design Specification Book)

APPROVED:

System: M. R. Mesnard

Subsystem: V. Anthony

JET PROPULSION LABORATORY

Spec. No. RL-4-460
22 January 1962

FUNCTIONAL SPECIFICATION
SPACECRAFT RANGER RA-6, 7, 8, 9 FLIGHT EQUIPMENT
MIDCOURSE AUTOPILOT SUBSYSTEM

1.0 SCOPE

This specification describes the functions performed by the RA-6, 7, 8, and 9 spacecraft autopilot during the midcourse maneuver. The operation is described by block diagrams. Component and operational specifications are listed for this subsystem.

2.0 APPLICABLE DOCUMENTS

2.1 The following documents apply to this specification:

SPECIFICATIONS

Jet Propulsion Laboratory

RL-3-110	Design Characteristics
RL-4-420	Attitude Control Subsystem
RL-4-430	Midcourse Guidance Subsystem, Spacecraft Design Specification Book, Ranger 6, 7, 8, and 9

3.0 AUTOPILOT FUNCTIONAL DESCRIPTION

3.1 Introduction

The autopilot intrafunctional relationship with the attitude control subsystem is shown in figure 3.3-1 of the Attitude Control Functional Specification (RL-4-420). The autopilot controls the spacecraft motion at the appropriate times about the pitch, yaw, and roll axis. The components in the pitch and yaw loops are shown in block diagram form in figure 3.1-1.

3.2 Autopilot Flight Description

At approximately 15.5 hours after launch, the spacecraft starts receiving the radio command information for the midcourse maneuver. The radio command consists of the roll and pitch turn durations (with polarity) the velocity increment, and the execute command. On receipt of the execute command, the CC&S commands the Attitude Control Subsystem to switch the roll axis from optical to inertial lock, to connect the roll capacitor, to turn on the autopilot and to extend the directional high-gain antenna to the exit angle, which is 180° from the nested position. This sequence is described in more detail in the Attitude Control (RL-4-420), Midcourse Guidance (RL-4-430), and the CC&S (RL-4-410), Functional Specifications. The midcourse motor is ignited after the sequence of command turns has been completed.

The line in space along which the turn command sequence positions the roll reference line when the error in the attitude control switching amplifiers is zero, is called the autopilot inertial reference line (IRL). The angular relationships are shown in figure 3.2-1. The roll reference line at midcourse motor ignition is within five milliradians of the IRL. This initial angular discrepancy is due to the dead zone of the attitude control switching amplifier.

3.3 Pitch and Yaw Autopilot Channels

The transverse velocity error, u (in figure 3.1-1 Autopilot Block Diagram, and table I Glossary of Symbols), results from the midcourse velocity correction. It is the purpose of the autopilot to keep this error close to zero. To accomplish this, the autopilot controls the angle λ_M, the measured inertial direction of the thrust vector relative to the IRL. The time-varying angle λ_M is the sum of the measured time-varying deflection of the thrust vector relative to the roll reference line (Δ_M), and the time-varying inertial attitude of the roll reference line relative to the IRL.

The pitch and yaw channels of the autopilot have two control loops. The inner loop is the autopilot loop which controls and stabilizes the vehicle attitude (θ_A) in inertial space in response to the autopilot command angle. Thus, the autopilot loop maintains a vehicle attitude θ_A which is (in the steady state) equal to $-1/K_S$ times the autopilot command angle. The autopilot command angle is then obtained from the outer loop, the path-guidance loop, by integrating $\lambda_M + \gamma_G \theta_A$ with the proper sign to reduce λ_M. In the steady state, this near-perfect integration forces λ_M to be

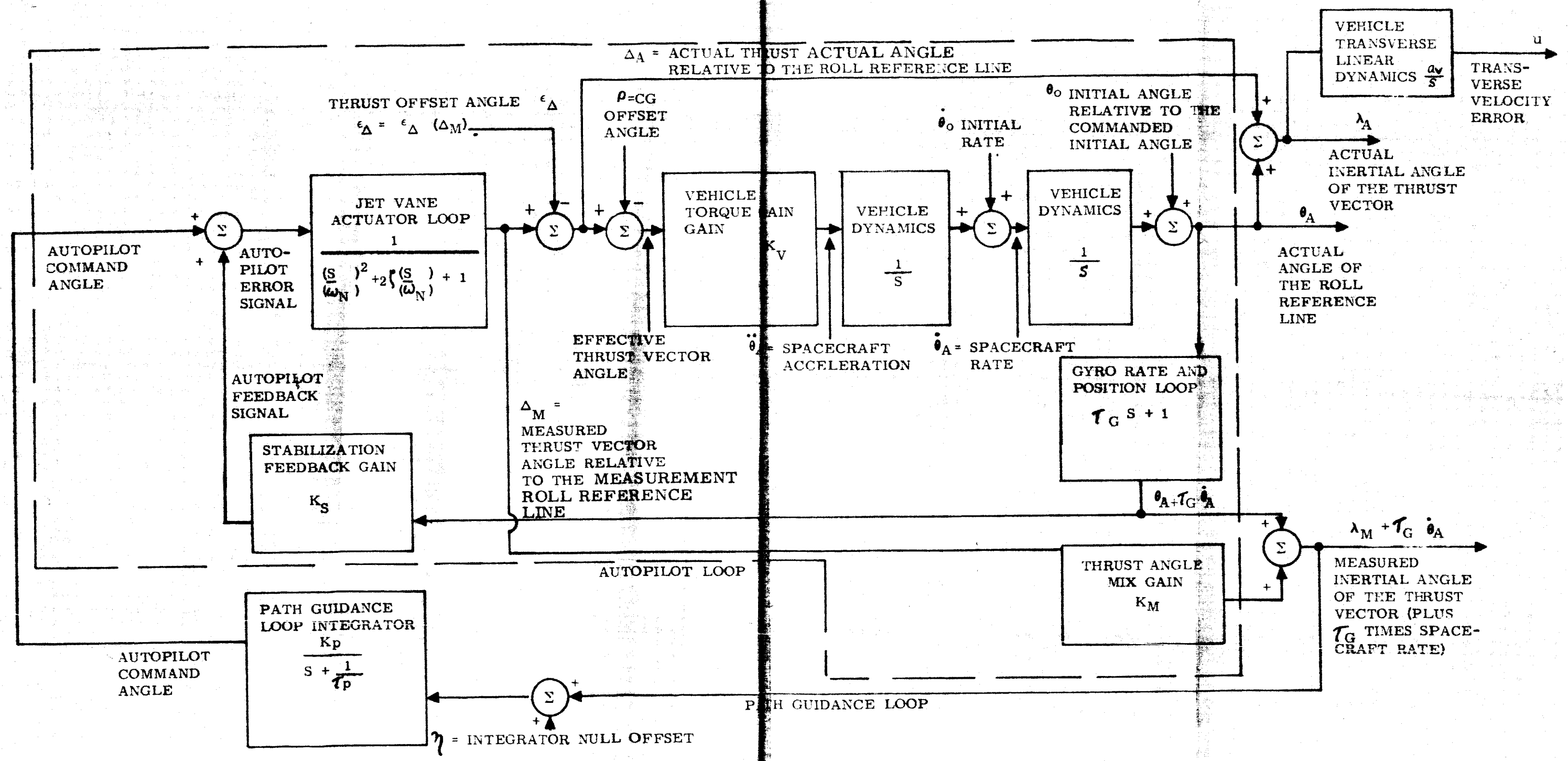

Figure 3.1-1. Autopilot Block Diagram (Pitch & Yaw)

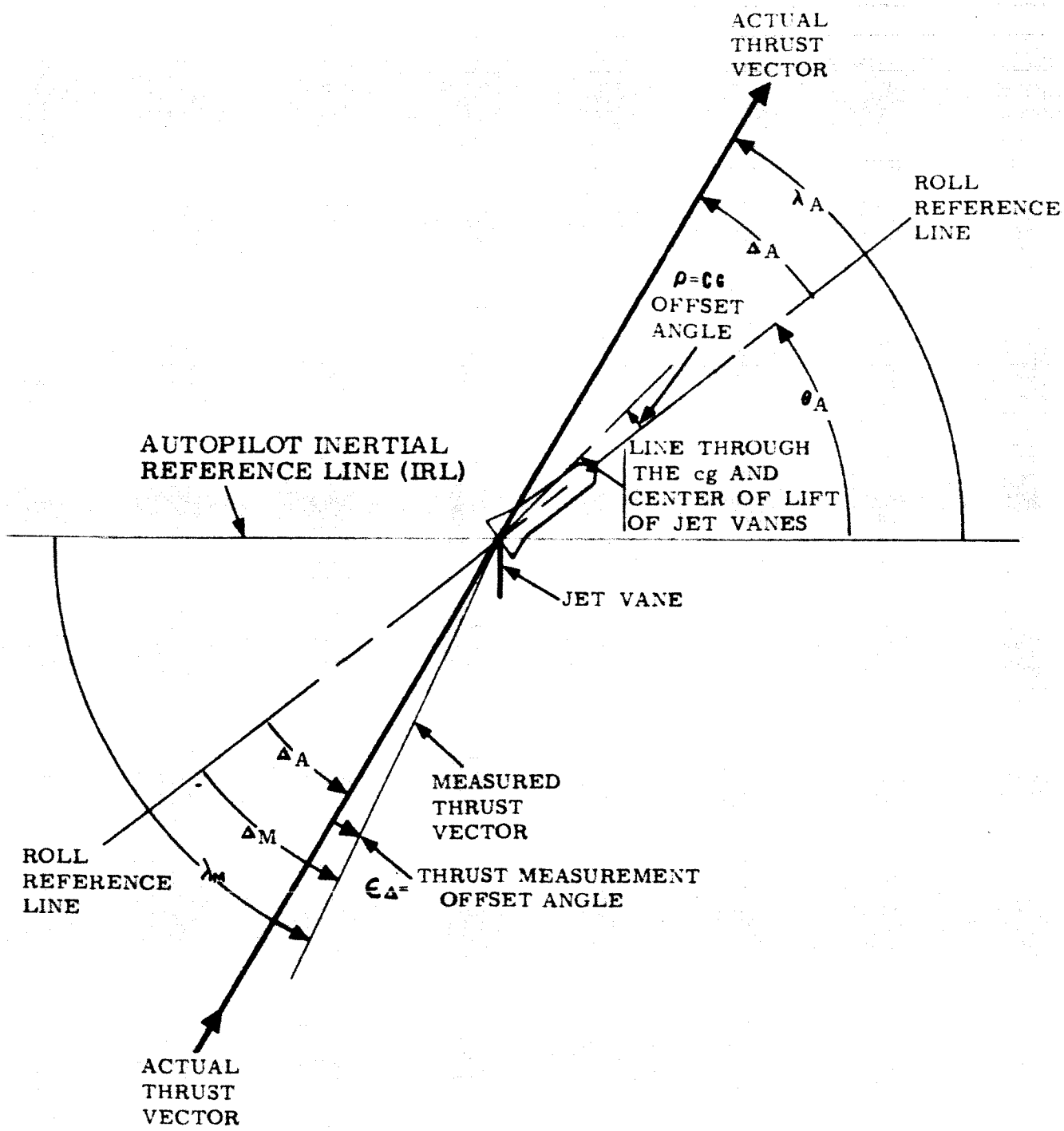

Figure 3.2-1. Angular Relationships

virtually zero, leaving λ_A with a residual error equal to the negative of the thrust vector offset ϵ_Δ.

It can be seen by inspection of the autopilot loop and the path guidance loop that, in the steady state, if $K_M = 0$ and $\eta = 0$, then $\lambda_A = +\rho$, whereas if $K_M = 1$ and $\eta = 0$, then $\lambda_A = -\epsilon_\Delta$. It has been shown that there is a value for $K_M = 1$ which minimizes the mean square error $\overline{\lambda_A^2}$, provided ϵ_Δ and ρ are normally distributed. This value is $K_M = \dfrac{\overline{\rho^2}}{\overline{\rho^2} + \overline{\epsilon_\Delta^2}}$ and the error is $\overline{\lambda^2 A} = K_M \overline{\epsilon_\Delta^2}$.

However, with $\epsilon_\Delta = 3.5$ milliradians 3σ and $\rho = 17.9$ milliradians 3σ, the result is $K_M = 0.963$ and $\lambda_A = 3.43$ milliradians 3σ. Since the improvement is so small (3.43 in place of 3.5 milliradians), K_M is shown here as unity for simplicity. Figure 3.3-1 shows the response for these parameters.

Stability is not difficult to achieve. The block diagram shows that the transfer function from the autopilot command signal to the thrust vector angle (λ_M) is approximately a constant at frequencies below the cut-off frequency of the autopilot loop. Thus, the path guidance loop, because it is slow compared with the autopilot loop, has a forward gain which is essentially a constant and a feedback gain which is essentially a single integration.

The torque necessary to control the vehicle is derived from the midcourse motor exhaust by jet vanes. Because the actual deflection of the thrust vector relative to the roll reference line is difficult to measure, the relationship between the jet vane angular position and the thrust vector angular deflection is calibrated before flight and the jet vane position signal is used as a measure of the thrust vector deflection.

The jet vane actuators are position servos with second order transfer functions. (See figure 3.1-1).

$$\frac{\text{measured jet vane angle}}{\text{commanded jet vane angle}} = \frac{A_M}{\Delta c} = \frac{1}{\left(\frac{S}{\omega_N}\right)^2 + 2\zeta\left(\frac{S}{\omega_N}\right) + 1}$$

The vehicle gain K_v is the vehicle angular acceleration, $\ddot{\theta}_A$, per unit of thrust deflection.

$$K_v = \frac{F\ L_c}{J_v}$$

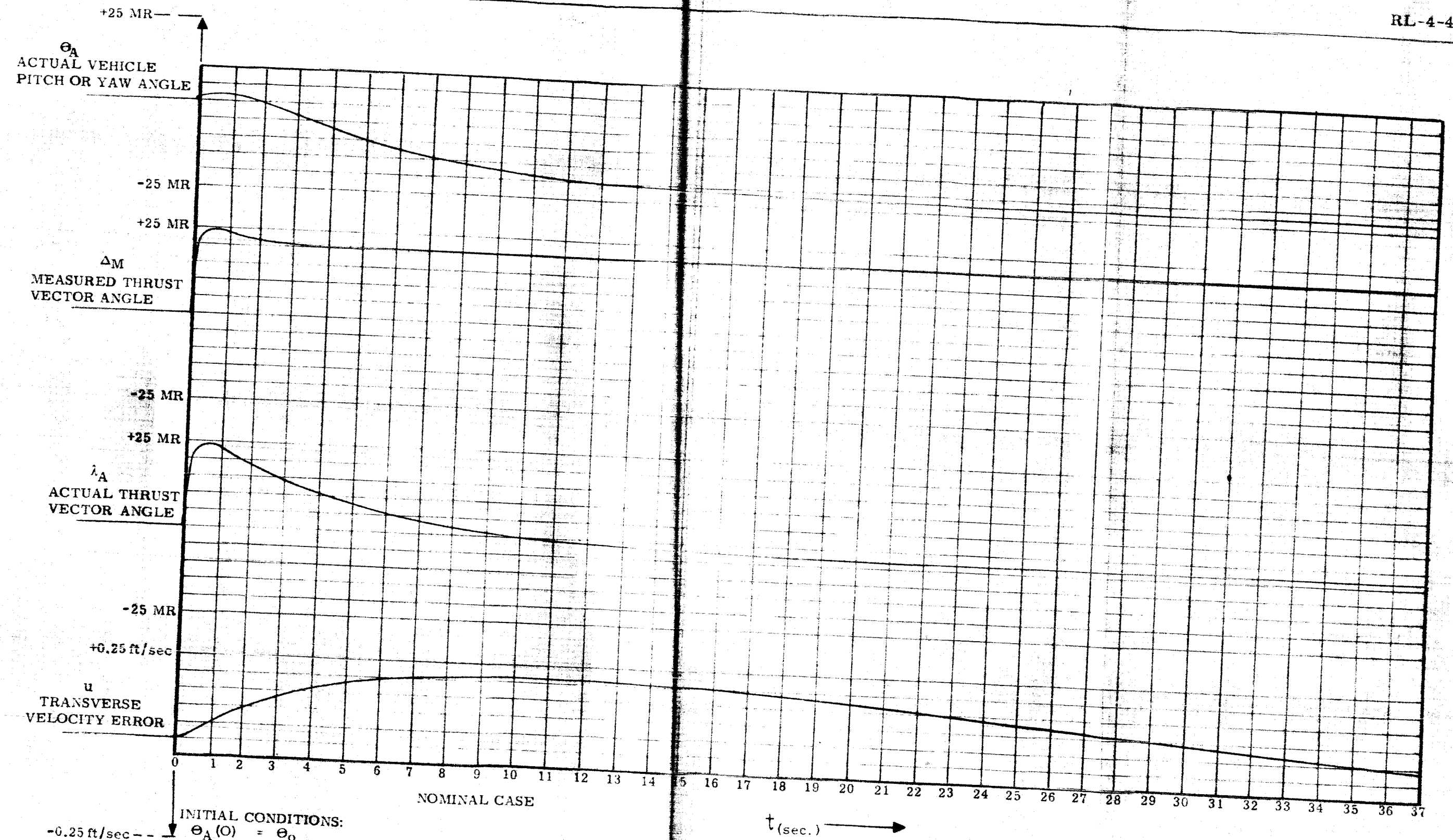

INITIAL CONDITIONS:

$\Theta_A(O) = \Theta_o$

$\dot{\Theta}_A(O) = O$

$\Delta_p(O) = O$

$\Delta_M(O) = K_s \Theta_A(O)$.

$\dot{\Delta}_M(O) = O$

NOMINAL PARAMETERS:

$\Theta_o = 1 \times 10^{-3}$ RADIANS	$\tau_g = 2$ SEC.	$\tau_p = 500$ SEC
$\epsilon_\Delta = 3.5 \times 10^{-3}$ RADIANS	$K_s = 3.952$ RAD/RAD	$\omega_A = 62.8$ RAD/SEC
$\rho = 17.9 \times 10^{-3}$ RADIANS	$K_p = 0.9436 \frac{\text{RAD/SEC}}{\text{RAD}}$	$\zeta_A = 0.3$
$\eta = 3.89 \times 10^{-4}$ RADIANS	$K_M = 1$ RAD/RAD	$K_V = 0.767$ RAD^2/SEC^2
		$a_V = 2.141$ FT/SEC^2

Figure 3.3-1. Pitch and Yaw Attitude Responses

Combining all these gains and transfer functions the stabilization loop control equation is:

$$\frac{\ddot{\theta}_A}{\theta_A} = \frac{K_v K_s \quad (\tau_G S + 1)}{\left(\frac{S}{\omega_N}\right)^2 + 2\zeta\left(\frac{S}{\omega_N}\right) + 1}$$

The approximation of the gyro transfer function is used for simplicity. In the study of system stability, the other terms are taken into account.

The value of K_v is a function of the vehicle and motor parameters. The values of τ_G and K_S are chosen to give good damping and gain margin with the path-guidance loop, open and closed. The closed loop response is of major importance, but the vehicle must not become unstable if the path guidance loop opens.

The path-guidance loop has an unstabilizing effect on the autopilot. The autopilot loop gain and time constant must be set in conjunction with the path guidance loop gains to produce the optimum set of parameters. The definition of optimum is determined by several factors: the system stability or damping, gain margins, sensor saturation limits, and of course, the transverse velocity error introduced by nominal system errors. The stability or damping criteria is that the low-frequency (path guidance) roots have at least 0.5 damping ratio. The gain margins are such that an increase of 6 db or a decrease of 12 db from the nominal gains will not cuase instability. Transients resulting from ignition of the motor with the worst combination of system errors do not cause saturation in the gyro. The transverse velocity error does not exceed 0.3 feet/second and is therefore compatible with the axial velocity resolution requirement.

Typical response of the complete autopilot pitch or yaw channel is shown in figure 3.3-1. It should be noted that the steady state value of the actual thrust vector deflection λ_A is equal to $-\epsilon_\Delta$ and not to ρ, which would be the case without a path-guidance loop, (and with K_s large).

3.4 Roll Autopilot Channel

The functional form of the roll autopilot channel shown in block diagram form (figure 3.4-1) is identical with the inner loop of the pitch and yaw channels. The roll channel has no path-guidance loop because a roll angle does not affect the thrust vector direction. The criteria for choosing the nominal loop gain and time constant are the same as for pitch or yaw.

The only steady roll disturbance is a roll torque produced by the mid-course motor. This torque shall not produce more than 20mr of steady state roll angle.

The roll channel drives all four jet vanes to provide roll control torques.

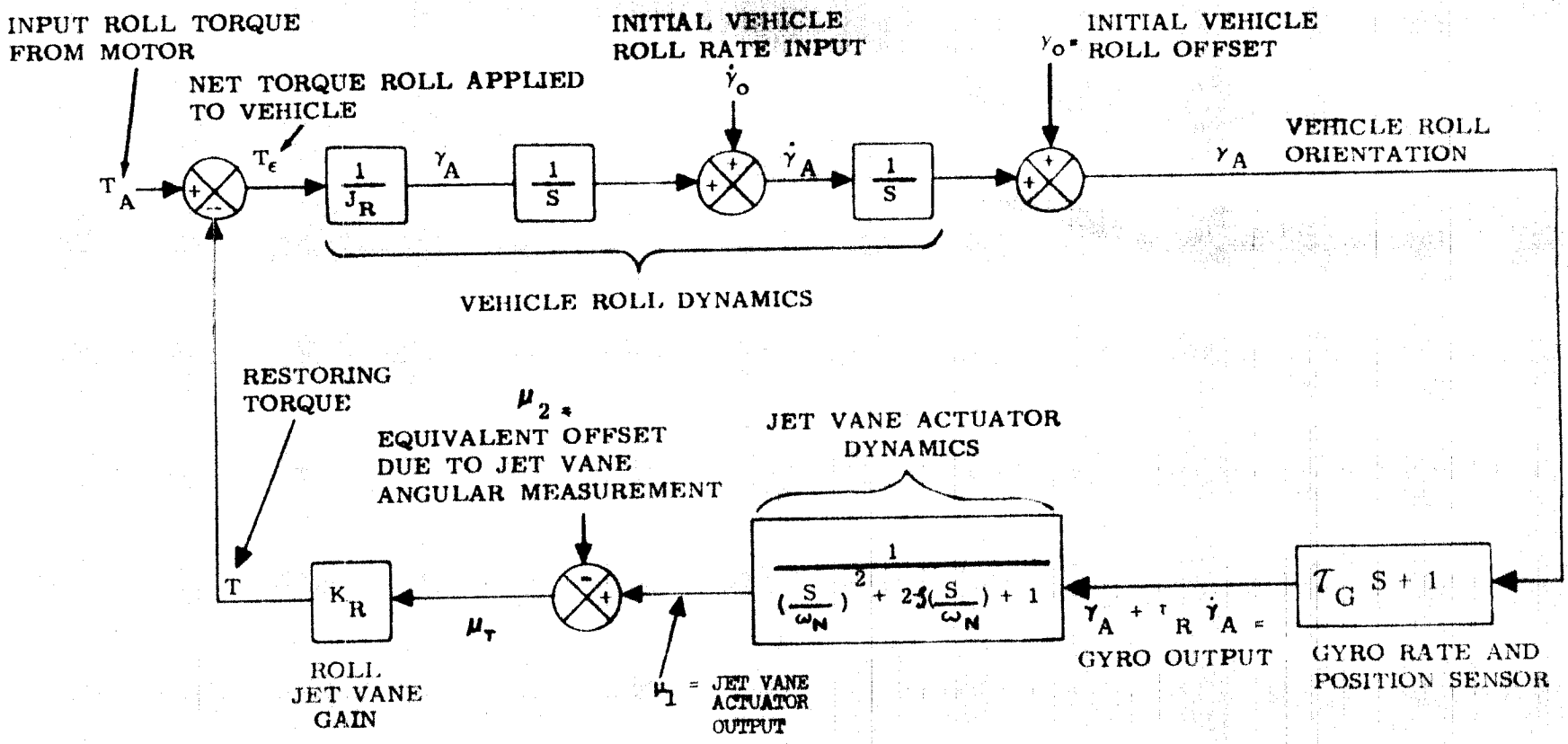

Figure 3.4-1. Autopilot Roll Channel Block Diagram

4.0 REQUIREMENTS ON PARAMETERS AND COMPONENTS

Before stating the requirements for parameters and components, the jet vane identification and deflection definitions will be discussed and the Glossary of Symbols included for reference.

Each jet vane is identified according to the axis on which it is located. Thus, there is a positive X jet vane, a negative X jet vane, a positive Y jet vane, and a negative Y jet vane. Positive deflection of the jet vanes is defined as follows and illustrated in figure 4.0-1.

Negative spacecraft pitch acceleration is produced by positive deflection of the X jet vanes. Negative spacecraft yaw acceleration is produced by positive deflection of the Y jet vanes. As a consequence of the above definitions, positive spacecraft roll acceleration is produced by positive deflection of the positive X and positive Y jet vanes and by negative deflection of the negative X and negative Y jet vanes.

All component alignment tolerances, etc., are relative to the spacecraft reference lines as defined in the Structural Functional Specification, RL-4-520 and in sections 5.0 and 6.0 of the Attitude Control System Functional Specification, RL-4-420.

All specifications must be met under all environmental conditions.

Specifications followed by the symbol " * " are not critical. If deviations from non-critical specifications are desired, requests for changes must be made known. Deviations from specifications must not be made without notice. Tolerances not otherwise marked are maximum values.

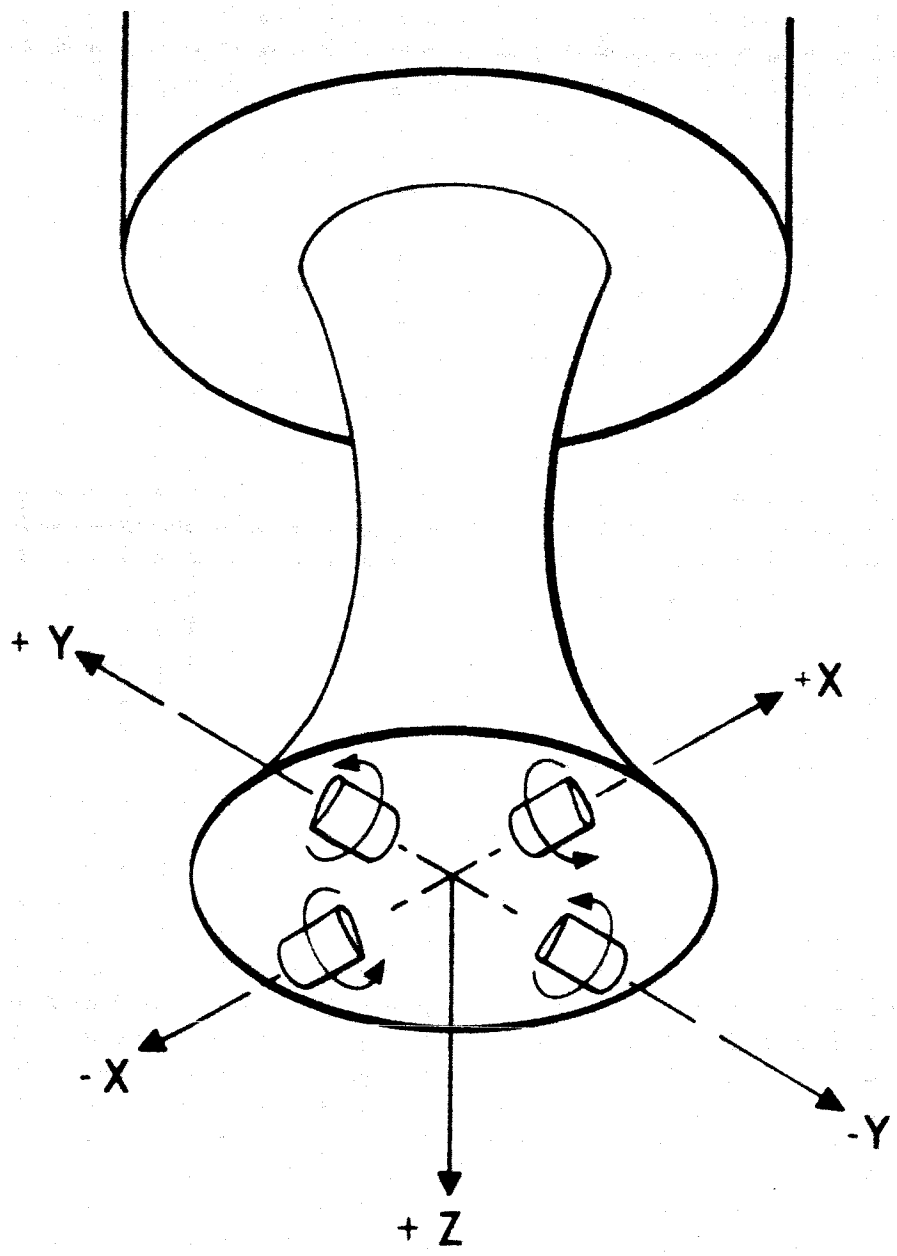

Figure 4.0-1. Jet Vane Deflections, Positive Definitions

Table I. Glossary of Symbols

dot above symbol	=	differentiation with respect to time (rate)	(sec^{-1})
IRL	=	inertial reference line	-
J_v	=	vehicle moment of inertia	$slug\text{-}ft^2$ = $ft\text{-}lb\text{-}sec^2$
u	=	side velocity	ft/sec
F	=	motor thrust	lb f
m	=	vehicle mass	slug
Lc	=	distance from CG to center-of-thrust	feet
T	=	roll restoring torque from jet vanes	ft. lbs
T_A	=	roll torque from motor and other misalignments	ft. lbs
T_ϵ	=	net roll torque applied to vehicle	ft. lbs
λ_A	=	actual angle from IRL to thrust vector	radian
λ_M	=	measured angle from IRL to thrust vector	radian
ω_N	=	second order "break" frequency of jet vane actuator loop	radian/sec
ρ	=	c. g. offset angle	rad
η	=	guidance integrator null offset	rad
θ_A	=	angle from IRL to roll reference line	radian
θ_o	=	initial angle from IRL to roll reference line	rad
Δ_A	=	actual angle from thrust vector to roll reference line	rad
Δ_M	=	measured angle from thrust vector to roll reference line	rad
ϵ_Δ	=	thrust offset angle	rad
a_v	=	vehicle linear deceleration	ft/sec^2
K_v	=	vehicle torque gain	$\frac{rad/sec^2}{rad}$
K_s	=	stabilization loop gain	$\frac{rad}{rad}$
K_P	=	path-guidance-loop gain	$\frac{rad/sec}{rad}$
K_R	=	roll channel jet vane torque gain	ft. lbs/rad
K_M	=	thrust angle mix gain	rad/rad
τ_G	=	gyro-loop time constant	sec
two dots above symbol	=	double differentiation with respect to time (acceleration)	(sec^{-2})

Table I. Glossary of Symbols (Cont'd)

τ_P	=	integrator leakage time constant	sec
ζ	=	jet vane actuator loop damping ratio	$\frac{\text{rad/sec}}{\text{rad/sec}}$
γ_o	=	initial roll angle offset	rad
γ_A	=	roll angle offset	rad
u_t	=	actual jet vane angle	rad
u_1	=	jet vane actuator output	rad
u_2	=	equivalent jet vane offset from measurement error	rad

4.1 Spacecraft and Midcourse Motor Parameters

Quantity	Nominal Value	Tolerance
Thrust	50 lbs	±5 percent *
Distance from c.g. to center-of-lift of jet vanes	23 inches	+5 inches * -1 inch
Moments of Inertia		
Pitch I_{xx}	slug Ft^2	±20 percent *
Yaw I_{yy}	slug Ft^2	±20 percent *
Roll I_{zz}	slug Ft^2	+20 percent * -25 percent *

4.2 Midcourse Motor Calibration and Mounting Requirements

4.2.1 The pitch angle of the resultant thrust vector relative to the spacecraft roll reference line must be determined as a function of the pitch angle of the jet vanes to an accuracy of ±3.5mr maximum error in the angle of thrust vector. This must be done for yaw angles of the thrust vector of -15mr, 0mr, and +15mr.

* Not critical.

APPENDIX A

10.0 SOURCES OF INFORMATION

10.1 The sources of information used in this specification are as follows:

Jet Propulsion Laboratory

30331	Detail Specification, Vehicle System Integration Requirements and Restraints for Ranger Spacecraft RA-6 through RA-9
	Agena Study Report (Classified)

Lockheed Missile Systems Division

6117A	General Environment Specification for Discoverer, Midas, and Sentry Programs
355991	Design Criteria, Qualification and Acceptance Test for Payload Packages
356765	SS 181 Flexible Flight Loads of Midas Follow-on Vehicle and Booster Combination
362201	SS 160 Vibration Data for Midas Follow-on
445823	Design Criteria, Qualification and Acceptance Test for Payload Packages
446128	Vehicle 1051 Flight Test Analysis
447004	Vehicle 1007 Flight Test Analysis
447041	Vehicle 1007 Flight Test Analysis
447223	SS 190 Vibration Data Analysis, Discoverer
447746	Preliminary Design Criteria, Qualification and Acceptance Tests for NASA Payload Packages, NASA Ranger

Convair Astronautics

AZS-55-007	Structural Design Criteria - Model 55
57-02400	Control Systems - Attitude, Missile Borne, Specification

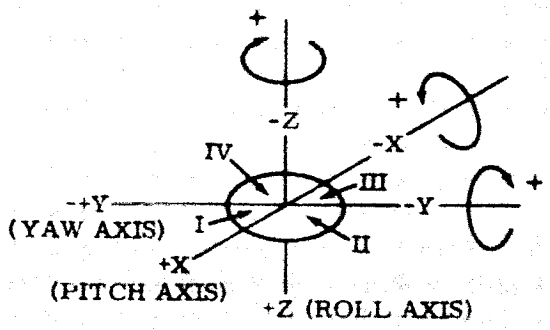

S/C - JPL
COORDINATE AXES SYSTEM

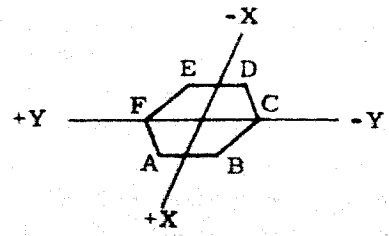

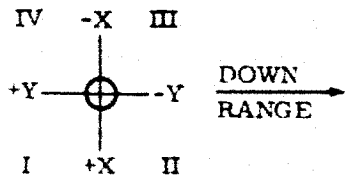

SECTION A-A
S/C - JPL

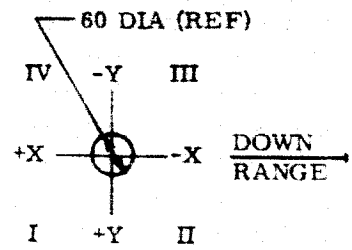

SECTION B-B
AGENA - LMSD

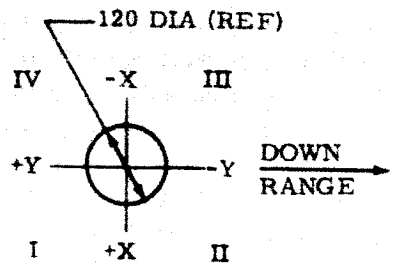

SECTION C-C
ATLAS - CONVAIR

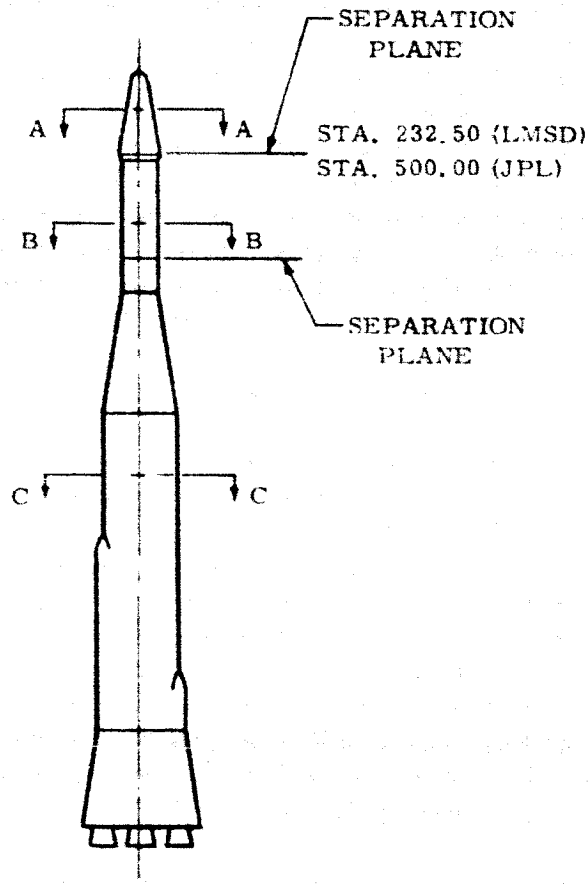

Figure 3.10-1 Coordinate Axes System

3.8.2.2 Local Resonances

Structures supporting individual scientific instruments and electronic components have their own local resonances. Care should be taken to see that the local resonances of the individual supporting structures do not coincide with the vehicle resonances and that individual instruments within close proximity of each other are different in resonance frequencies. Loads resulting from local structural resonances are in general included in table 3.8.1.1-I, but the loads in supporting structure should be verified by vibration test given in JPL Specification 30232, or JPL Specification 30201, whichever is applicable.

3.8.2.3 Deflection Criteria

The dynamic envelope is given by the spacecraft envelope and interface drawings in paragraph 2.1.

a. Ranger RA 6 through 9 - maximum allowable dynamic motion under the structural vibration test given in JPL Specification 30232 is 2 inches peak-to-peak at the top of the omniantenna, relative to Station 500, and 3.5 inches peak-to-peak motion of the tips of the solar panels.

3.8.3 Midcourse Maneuver Frequencies

For the midcourse maneuver, all items different in configuration from the boost phase, such as high gain antenna, solar panels, etc., shall have a natural frequency above 1.5 cps.

3.8.4 Fatigue Design

Attention shall be given to the fatigue considerations outlined in paragraph 3.4. The satisfactory performance of a structure through all of the vibration tests prescribed in either JPL Specification 30232 or JPL Specification 30201 shall be deemed sufficient evidence of acceptable fatigue strength of the spacecraft configuration.

3.9 Weight

The weight for spacecrafts 6 through 9 and payload is maintained up to date in the Reference Designation and Design Parameter Specification.

3.10 Coordinate Axes

The coordinate axis system shown in figure 3.10-1 is to be used for the orientation of the structural components.

Table 3.8.1.1-I Load Factors - Accelerations at Spacecraft Center of Gravity

Phase	Translational			Rotational		
	Longitudinal		Lateral			
	+Z(aft) g's	-Z(fwd) g's	g's	Pitch rad/sec^2	Yaw rad/sec^2	Roll rad/sec^2
Pre-launch	(Not to exceed flight limit loads)					
Launch to S/C Separation						
RA 6 - 9	10.0	3.0	2.0	2.5	2.5	0.3
Post S/C Separation						
Cruise Mode	0.1	0.1	0.1	0.15	0.15	0.15
Midcourse Maneuver RA 6 - 9	0.5	0.5	0.5	0.15	0.15	0.15

JPL Specification RL-4-540 for a detailed list of components and their respective temperature ranges.

3.8 Design Factors

The following factors shall be used to design the Ranger spacecraft. Weights (masses) used in design or analysis calculations for any structure shall be based on the weight (mass) of the structure plus any additional weight (mass) whose load may be transmitted through the structure.

3.8.1 Static Load Factors

The following load factors shall be used in the static design of the Ranger spacecraft. Each load factor includes the maximum steady state acceleration and an appropriate allowance for dynamics, based on the design conditions given in paragraph 3.7.

3.8.1.1 Accelerations at Center of Gravity

The load factors indicated in table 3.8.1.1-I are the accelerations at the spacecraft center of gravity which are to be considered in the various phases of flight from pre-launch to post spacecraft separation.

3.8.1.2 Combination of Load Factors

The load factors in table 3.8.1.1-I shall be applied both alone and in planar combination in order to determine the most severe design condition.

3.8.1.3 Combined Loads

The load factor established in paragraph 3.8.1.1 is for maximum steady operation with appropriate allowance for dynamics. The loads due to following design constraints shall be superimposed upon the above load factors.

a. Paragraphs 3.7.2.5 and 3.7.3.4 - - thermal requirements

b. Paragraph 3.7.2.6 - - pressure changes due to altitude change

3.8.2 Dynamic Design Factors

The dynamic design of the Ranger spacecraft structure shall be based on the following factors:

3.8.2.1 Rigidity Design of the Spacecraft

The rigidity of the spacecraft shall be such that excessive deflections do not result when the structure is subjected to structural vibration test given in JPL Specification 30232.

3.7.2.5 Temperature

Aerodynamic heating and solar radiation during the coasting orbit may cause the external structure to reach a maximum temperature of 250°F. The maximum time duration at this temperature is 1/2 hour. (Ref. JPL Specification RL-4-540, Temperature Control Subsystem Functional Specification).

3.7.2.6 Pressure Changes

Consideration shall be given to the satisfactory venting of each structural component during the pre-injection phase of flight in order to prevent failure caused by ambient pressure changes due to increase in altitude. A structure without satisfactory venting must be designed for an internal pressure.

3.7.3 Post Spacecraft Separation

The following load conditions existing after spacecraft separation are considered in the design of Ranger spacecraft.

3.7.3.1 Attitude Control Loads

Loads imposed by the attitude control subsystem are acceleration rates about the three control axis of a nominal 2×10^{-4} rad/sec^2. (See JPL Specifications RA345-4-430 and RL-4-420).

3.7.3.2 Midcourse Maneuver

The midcourse maneuver will remove or reduce injection dispersion errors. This is to be accomplished by using a liquid propellant engine.

3.7.3.2.1 Thrust Vector Control

Thrust vector control will be provided by four jet vanes capable of maximum pitch and yaw restoring moments about the vehicle center of gravity of 3.2 foot-pounds and a minimum roll moment of 0.1 foot-pounds. (See JPL Specifications RL-4-430 and RL-4-610).

3.7.3.3 Terminal Maneuver

The terminal maneuver is made so that the spacecraft roll axis will be compatible with alignment of the primary TV camera axis before impact with the moon. Loads imparted to the spacecraft are the same as those given in paragraph 3.7.3.1. (See JPL Specification RL-4-440).

3.7.3.4 Temperature

After injection, the expected temperature environment is in the range -50°F to +200°F. Some form of temperature control will be used for those components unable to tolerate this range of temperature. See

tation on the system test fixture. The functioning equipment on the Ranger spacecraft is to consist of the booms, parabolic dish antenna and solar panels.

3.7.2 Launch to Spacecraft Separation

The following load conditions existing from launch to spacecraft separation shall be considered in the design of Ranger spacecraft.

3.7.2.1 Maximum Longitudinal Accelerations

The maximum longitudinal acceleration, determined by the mission trajectory of the Ranger 6 - 9 spacecraft, is 7.0 g.

3.7.2.2 Vehicle Flight Maneuver Loads

Vehicle flight maneuver loads shall include loads resulting from programmed roll, programmed pitch, and vehicle correction resulting from wind disturbance, booster jettisoning, fuel sloshing, etc.

3.7.2.2.1 Maximum Pitch Acceleration

The maximum pitch acceleration to which the spacecraft is to be exposed is 3.7 rad/sec^2 and occurs at the termination of the second Agena stage of flight when the Agena engine is gimballed hard-over. This condition is concurrent with paragraph 3.7.2.2.3.

3.7.2.2.2 Maximum Roll Acceleration

The maximum roll acceleration to which the spacecraft is to be exposed is 0.2 rad/sec^2. This will occur during the Agena phase of flight when the roll control jets are operating.

3.7.2.2.3 Maximum Lateral Acceleration

The maximum steady-state lateral acceleration of the spacecraft center-of-gravity is evaluated at 0.5 g. This condition is concurrent with paragraph 3.7.2.2.1.

3.7.2.3 Vibration Environments

The following are the expected flight structural vibration environments existing at the spacecraft booster separation plane.

Longitudinal	0 - 1.5 g peak	2 - 250 cps
Lateral	0 - 0.5 g peak	2 - 250 cps

3.7.2.4 Separation Loads

Separation loads (both static and elastic dynamic) include loads induced in the spacecraft during the separations of the Atlas booster, Atlas sustainer stage, spacecraft shroud, and the Agena stage.

3.5 Temperature Consideration

Consideration shall be given to deterioration of material properties due to prolonged temperature effects and to stresses and deformation caused by transient temperature effects.

3.6 Rigidity

Rigidity shall be provided to permit accomplishment of all flight conditions without structural deflections of a magnitude sufficient to jeopardize proper functioning of the spacecraft or any component, thereof. The fulfillment of the strength requirements under 3.3 shall not be deemed sufficient in themselves to satisfy this requirement.

3.6.1 Excessive Deflections

Deflections of a magnitude sufficient to jeopardize proper functioning shall be considered excessive if they:

a. Allow collisions between various spacecraft components

b. Allow collisions between the spacecraft envelope and any portion of the spacecraft

3.7 Design Conditions

The following environments shall be considered in the structural design of the Ranger spacecraft. Those conditions considered to be critical in the structural design of the spacecraft are presented in detail in paragraph 3.8. Any conflict between requirements presented in this paragraph and those in paragraph 3.8 shall be decided in favor of those in paragraph 3.8.

3.7.1 Pre-launch

The following load conditions are presumed to exist prior to launch and shall be considered in the design of Ranger spacecraft.

3.7.1.1 Ground Handling and Transportation

Loads resulting from ground handling or transportation shall be such that they do not exceed flight limit load.

3.7.1.2 Ground Tests

Loads resulting from ground testing or system testing are to be considered in the design of the Ranger spacecraft. These considerations include:

a. In the System Test Fixture, the spacecraft is to be cantilevered at Station 500, and it may be oriented to any position.

b. The support structure is to be designed such that the spacecraft functioning equipment may operate in any possible orien-

3.3.1 Yield Strength

The stress in any element of the structure, subjected to a yield design load, shall not exceed the allowable yield stress. The entire structure and components shall be capable of withstanding the yield design load without permanent deformation.

3.3.2 Ultimate Strength

The stress in any element of the structure subjected to an ultimate design load, shall not exceed the ultimate allowable stress. The entire structure and components shall be capable of withstanding the ultimate design load without failure.

3.3.3 Stress values

The allowable stress values used to substantiate the structural integrity of the spacecraft shall be those from an approved publication such as:

a. MIL-HDBK-5 Strength of Metal, Aircraft Elements

b. Specifications of the JPL Materials and Process Group, Section 353

3.3.4 Margins of Safety

Positive margins of safety shall be defined as the amount by which the ratio of the allowable load and the design load of the member exceeds the actual design load on the member. Margin of safety investigations shall be considered at both yield and ultimate load levels. Positive margins of safety shall be calculated in general as follows:

$$M.S. = \frac{\text{Allowable load (or allowable stress)}}{\text{Design load (or design stress)}} - 1 \geq 0$$

Where stresses along more than one axis are involved, the stress ratio and margin of safety calculations as presented in applicable document MIL-HDBK-5 shall be used. A margin of safety may be demonstrated by test instead of by analysis.

3.4 Fatigue Consideration

Special attention shall be given to the design of components in which fatigue failure is a major consideration, such as vessels subjected to repeated pressure cycles, and hardware adjacent to severe vibration sources. Caution shall be executed to avoid residual stresses, stress concentrations and poor surface finishes and under all circumstances the materials shall exhibit satisfactory fatigue characteristics.

3.2.2.2 Hazard Criteria (gas vessels pressurized near personnel)

a. Vessels shall be fabricated from an approved tough, ductile material such as 6 AL 4 V titanium, annealed.

b. Limit load (pressure) must include the effects of temperature increases which may occur near personnel.

c. The minimum burst pressure shall be verified by at least three (3) hydrostatic burst tests in which pressure-volume data is obtained.

d. Material properties shall be verified and fabrication quality control shall be maintained by procedures designated in JPL Specification 30209.

3.2.2.3 Yield Design Loads

The yield design load shall be identical to the design load for the Ranger spacecraft.

3.2.2.4 Ultimate Design Load

The ultimate design load shall be the design load multiplied by 1.25.

3.2.3 Transient Loads

All loads of transient nature shall be considered. They shall include suddenly applied forces, accelerations, elastic deflections, and thrust variations during starting, steady operations, and cutoff during both Atlas and Agena phases of flight.

3.2.3.1 Dynamic Loads

Analysis of the dynamic loads of the spacecraft shall consider the loads induced by the elastic response of the spacecraft to the given excitation in addition to the rigid body response.

3.2.3.2 Vibration Loads

The spacecraft in its entirety and in its basic assemblies shall be designed and tested as required by the applicable vibration requirements of JPL Specification 30232.

3.3 Design Strength Criteria

The following criteria of yield and ultimate stress shall be used in the design and analysis of the Ranger spacecraft.

Report No. 364774-TXA 440	Shroud/Spacecraft Thermal Relationship TAD 11
Report No. 447172/62-91	Final Report of NASA TAD 002 Study Agena/Spacecraft/Shroud Separation

3.0 REQUIREMENTS

3.1 General

The specifications, drawings, and publications listed under paragraph 2.1 are essential to the requirements of this specification since they define, in themselves, certain factors to be considered in the design of the spacecraft.

3.2 Design Load Determination

Design loads for the Ranger spacecraft shall be based on the requirements set forth in this specification.

3.2.1 Limit Loads

Limit loads shall represent the maximum loads the structure is expected to experience under specified conditions of operation or use. All loads and load factors used in this document shall be limit loads unless otherwise noted.

3.2.2 Design Loads

A design load shall be a limit load multiplied by the appropriate hazard factor.

3.2.2.1 Hazard Factors

The hazard factors to be used in the design of the spacecraft, or any component, thereof, are presented in table 3.2.2.1-I.

Table 3.2.2.1-I

Item	Hazard Factor
All components except Pressure Vessels	1.0
Pressure vessels hazardous to personnel in the event of failure	1.76
Pressure vessels non-hazardous to personnel in the event of failure	1.0

30209	Process Specification, Flight Equipment, Titanium Alloy 6AL 4V Compressed Gas Vessels, (Pressurized in the Vicinity of Personnel)
30232	Environmental Specification, Structural Qualification Test Requirements, Flight Equipment RA-1 through RA-5

Lockheed Missile Systems Division (LMSD)

446553	Agena B Booster, NASA Program

DRAWINGS

Jet Propulsion Laboratory

J3150106	RA-6 Spacecraft Assembly Drawing
J3150107	RA-7 Spacecraft Assembly Drawing
J3150108	RA-8 Spacecraft Assembly Drawing
J3150109	RA-9 Spacecraft Assembly Drawing
J3151940	Interface, Ranger Spacecraft and RCA TV Subsystem

Lockheed Missile Systems Division (LMSD)

361198	Short Agena Engine Ignition and Cutoff Thrust Characteristics (Classified)

PUBLICATIONS

Military

MIL-HDBK-5	Strength of Metals, Aircraft Elements, March 1959

Lockheed Missile Systems Division (LMSD)

Report No. 361195	Mass Properties vs Flight Time for Atlas-Agena-Ranger vehicle (Classified)
Report No. 361196	Mass Properties vs Flight Time for Atlas-Agena-Ranger vehicle (Classified)
Report No. 361197	EI and AG Curves - Room Temperature (Classified)
Report No. 361199	Mass Properties vs Flight Time for Atlas-Agena-Ranger vehicle (Classified)

(Insert in Spacecraft Design Specification Book)

APPROVED:
System: M. R. Mesnard
Subsystem: J. J. McPherson

JET PROPULSION LABORATORY

Spec. No. RL-4-510
15 January 1962

FUNCTIONAL SPECIFICATION
RANGER RA-6 THROUGH RA-9, MISSIONS P-53 THROUGH P-56
STRUCTURAL DESIGN CRITERIA

1.0 SCOPE

1.1 Scope

This specification establishes the basic structural design factors for the Ranger 6 through 9 spacecraft.

2.0 APPLICABLE DOCUMENTS

2.1 The following documents form a part of this specification:

SPECIFICATIONS

Jet Propulsion Laboratory

	Ranger Spacecraft Design Specification Book
30201	Environmental Specification, Ranger RA-1 through RA-5 Flight Equipment, Assembly Level Type Approval and Unit Acceptance Test Requirements

	Quantity	Nominal Value	Tolerance
3.	Path guidance loop gain product $K_p K_v$		
	Pitch and yaw axes	$0.721 \frac{1}{Sec^3}$	±20 percent
4.	Thrust angle mix gain K_M		
	Pitch and yaw axes	1.0	±20 percent

4.5 Gyro and Gyro Loop Specifications

These specifications are in addition to those listed in the attitude control specification RL-4-420, section 5.3. Refer to figures 3.1-1 & 3.4-1.

	Quantity	Nominal Value	Tolerance
1.	Time constant τ_G/K_G		
	Pitch axis	2 seconds	±15 percent
	Yaw axis	2 seconds	±15 percent
	Roll axis	2 seconds	±15 percent
2.	Torquing amplifier voltage saturation	53mr minimum	

4.6 Path Guidance Loop Integrator Specifications

Refer to figure 4-2.

	Quantity	Nominal Value	Tolerance
1.	Time constant τ_p	500 secs minimum	
2.	Null offset η	0	±1mr

4.3 Jet Vanes and Jet Vane Actuator Loop Specifications

Refer to figures 4-2 and 4-4.

Quantity	Nominal Value
1. Second order closed loop cut-off frequency ω_N.	$62.8 \frac{Rad}{Sec}$ minimum
2. Damping ratio ζ	0.3 minimum

4.3.1 Pitch, Yaw and Roll Moment Capabilities

The pitch and yaw restoring moment capability about the vehicle center of gravity must be 3.2 ft-lbs minimum. Any combination of pitch and yaw moments within the above capability must not reduce the net available roll moment capability below 0.1 ft-lbs.

4.3.2 Pitch, Yaw and Roll Torque Gain Linearity

The incremental restoring moment versus vane deflection in pitch, yaw and roll shall not vary by more than 30 percent of the zero torque value of incremental restoring moment versus vane deflection for any combination of pitch, yaw or roll torques within the capabilities listed in section 5.3.1 above. The incremental restoring moment versus vane deflection in pitch, yaw and roll shall not vary by more than 10 percent of the zero torque value of the incremental restoring moment versus vane deflection for any combination up to 1.6 ft-lb pitch and yaw and 0.05 ft-lb roll.

4.3.3 Jet Vane Cross Coupling

The cross coupling due to jet vane configuration or geometry shall be such that there shall be no combination of restoring torques within the maximum value on any two axes that will change the restoring torque about the third axis by more than 10 percent of its maximum value.

4.4 Autopilot Overall Specifications

Quantity	Nominal Value	Tolerance
1. Autopilot loop gain product $K_s K_v$		
Pitch and yaw axes	$3.03 \frac{1}{Sec^2}$	±20 percent
2. Autopilot loop gain product $\frac{K_R}{J_R}$		
Roll axis	$0.632 \frac{1}{Sec^2}$	±20 percent

4.2.5 The location of the CG in the midcourse configuration must be determined to an accuracy of ±0.25 inch in X and Y coordinates and ±1 inch in Z coordinate. The location of the CG in the midcourse configuration must take into account the location of on-board equipment such as arms, booms, and the high gain antenna. For example, the high gain antenna is 180° from the nested position. The mass at midcourse of on-board equipment must also be taken into account. For example, the storage battery does not have the same mass at midcourse as it has at launch.

4.2.6 The midcourse motor must be calibrated and mounted such that the X and Y coordinates of the thrust vector, when it is parallel to the roll reference line, is within a 3/16-inch square centered about the nominal X and Y coordinates of the nominal CG of the midcourse configuration.

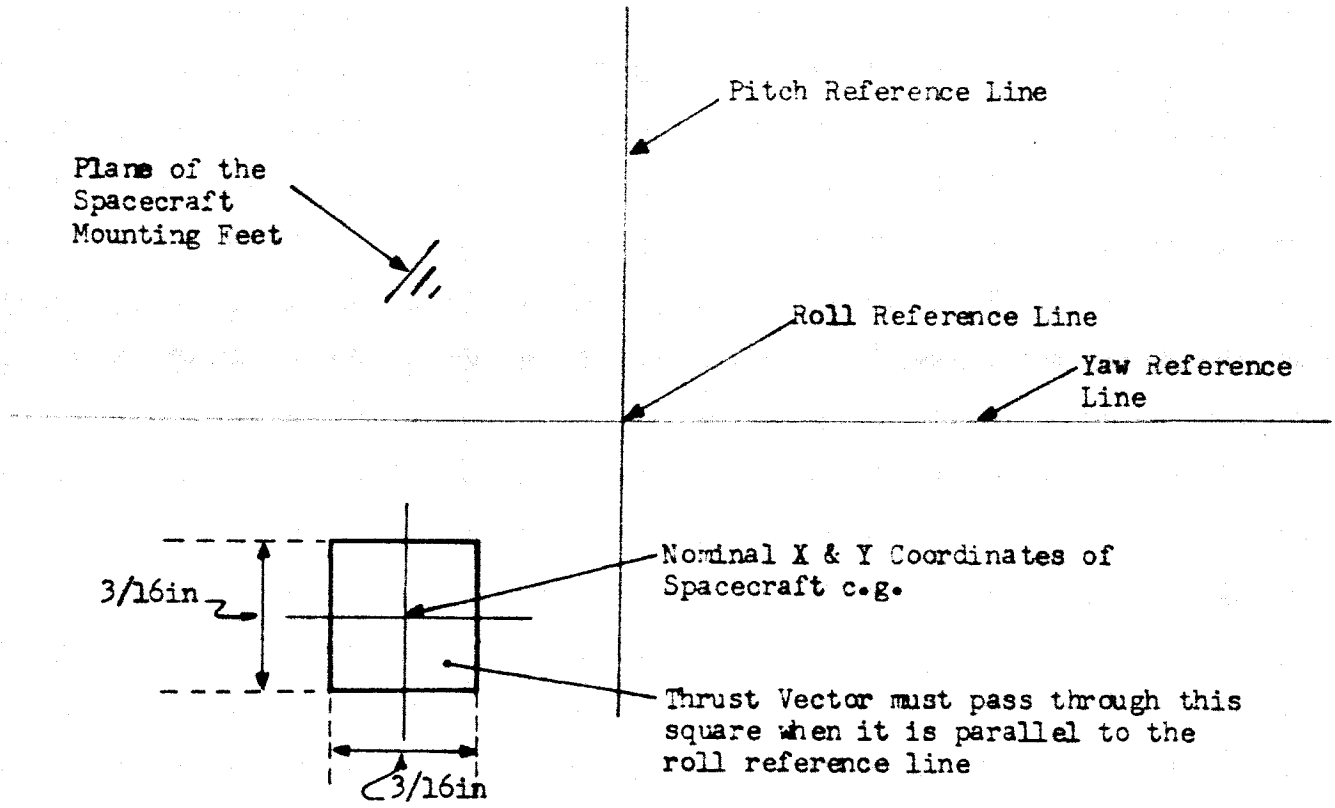

4.2.7 Asymmetrical impingement of the exhaust gases on the spacecraft shall not alter the direction of the net thrust vector by more than 0.5mr due to the combined effects of forces on the impinged surfaces and warping due to uneven heating.

4.2.8 The jet vanes axes must be aligned parallel to the pitch and yaw reference lines within 20mr.

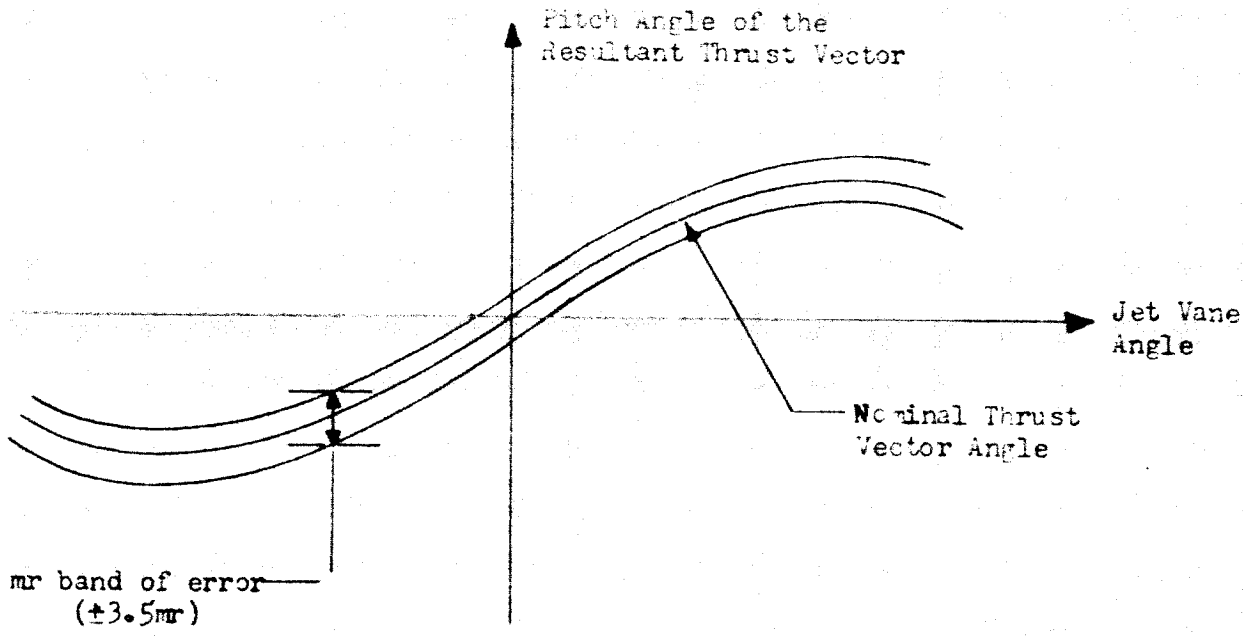

4.2.2 The yaw angle of the resultant thrust vector must be calibrated in an identical manner.

4.2.3 The roll torque must be calibrated versus the roll angle of the jet vanes to a resolution of 0.02 ft-lbs.* This must be done for pitch and yaw thrust vector angles = 0.

4.2.4 The Z coordinate of the line about which the resultant thrust vector turns as the jet vanes are deflected must be determined with an accuracy of ±1 inch maximum.

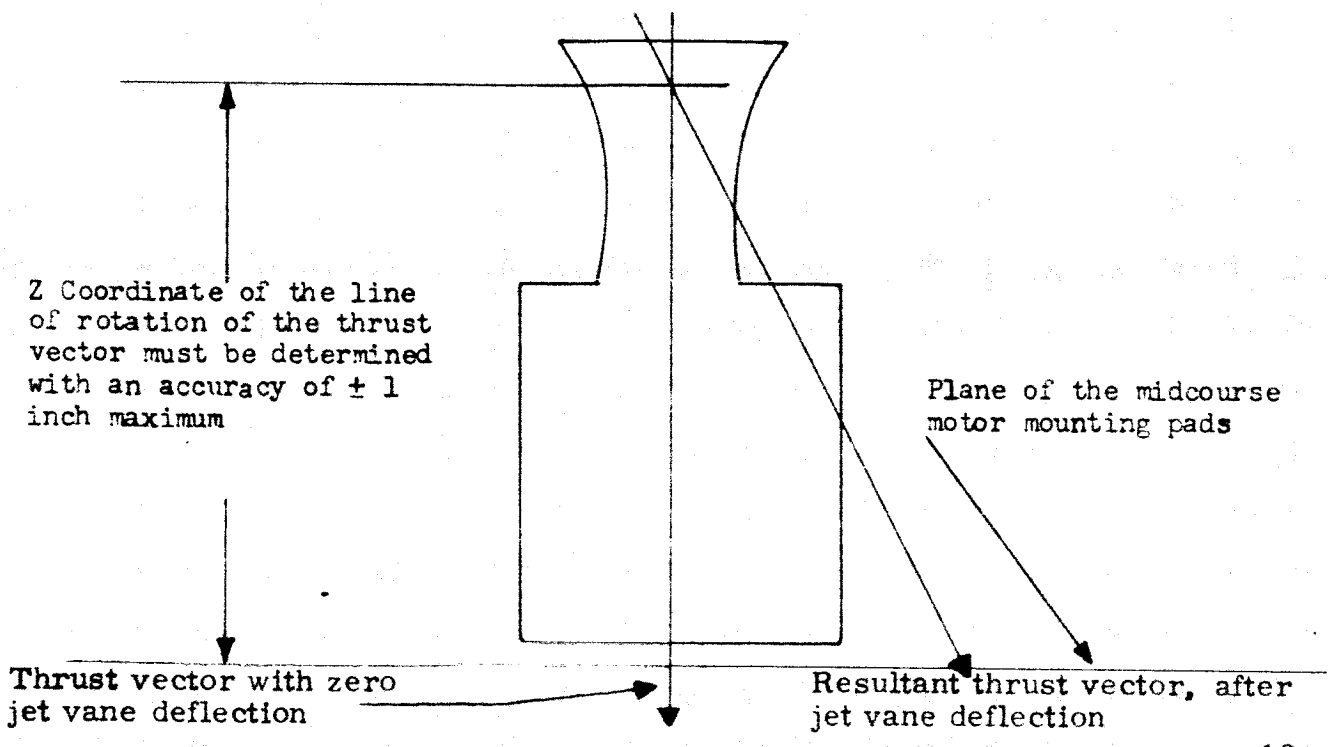

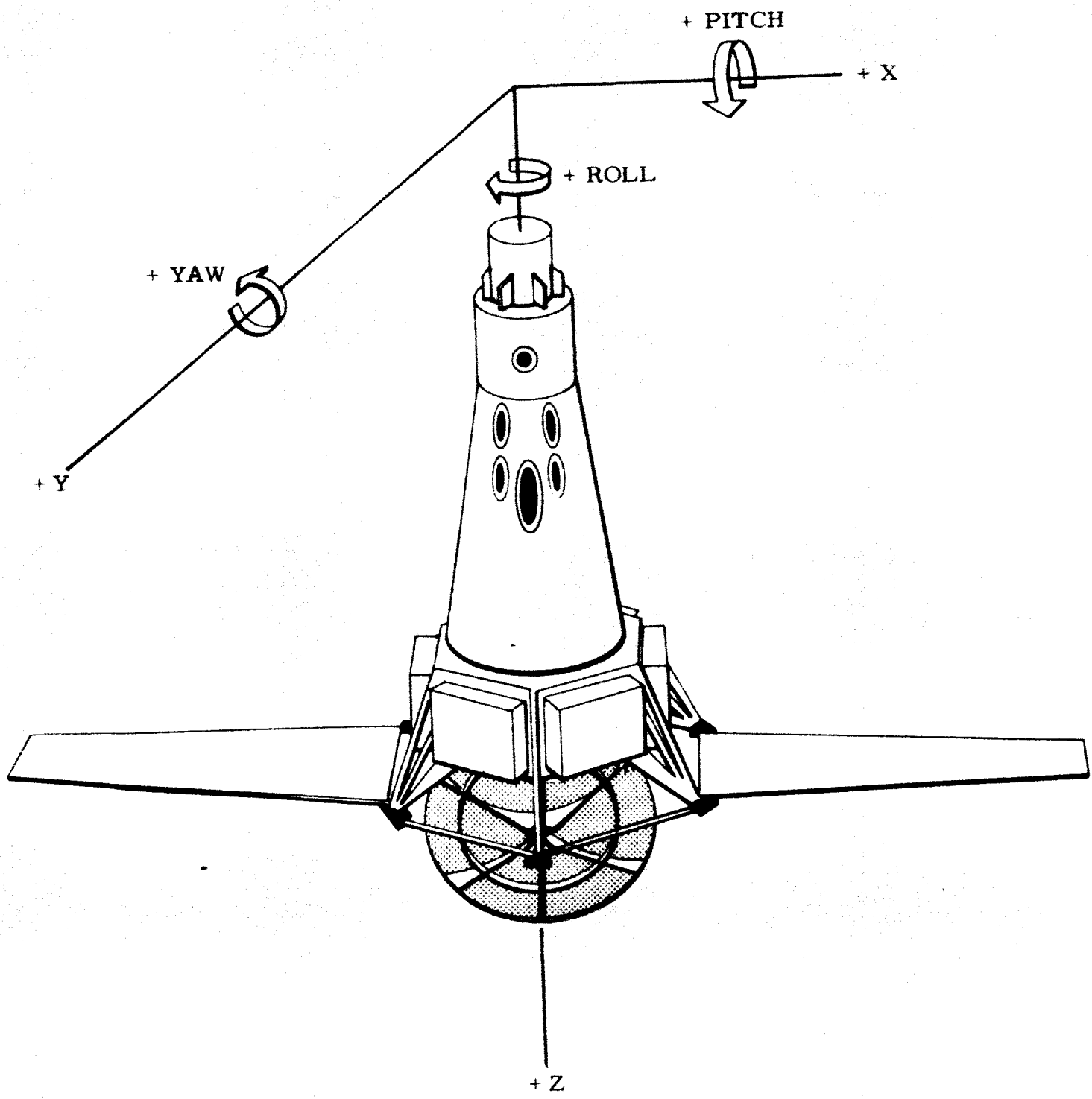

Figure 4-2. Angle and Moment Definition

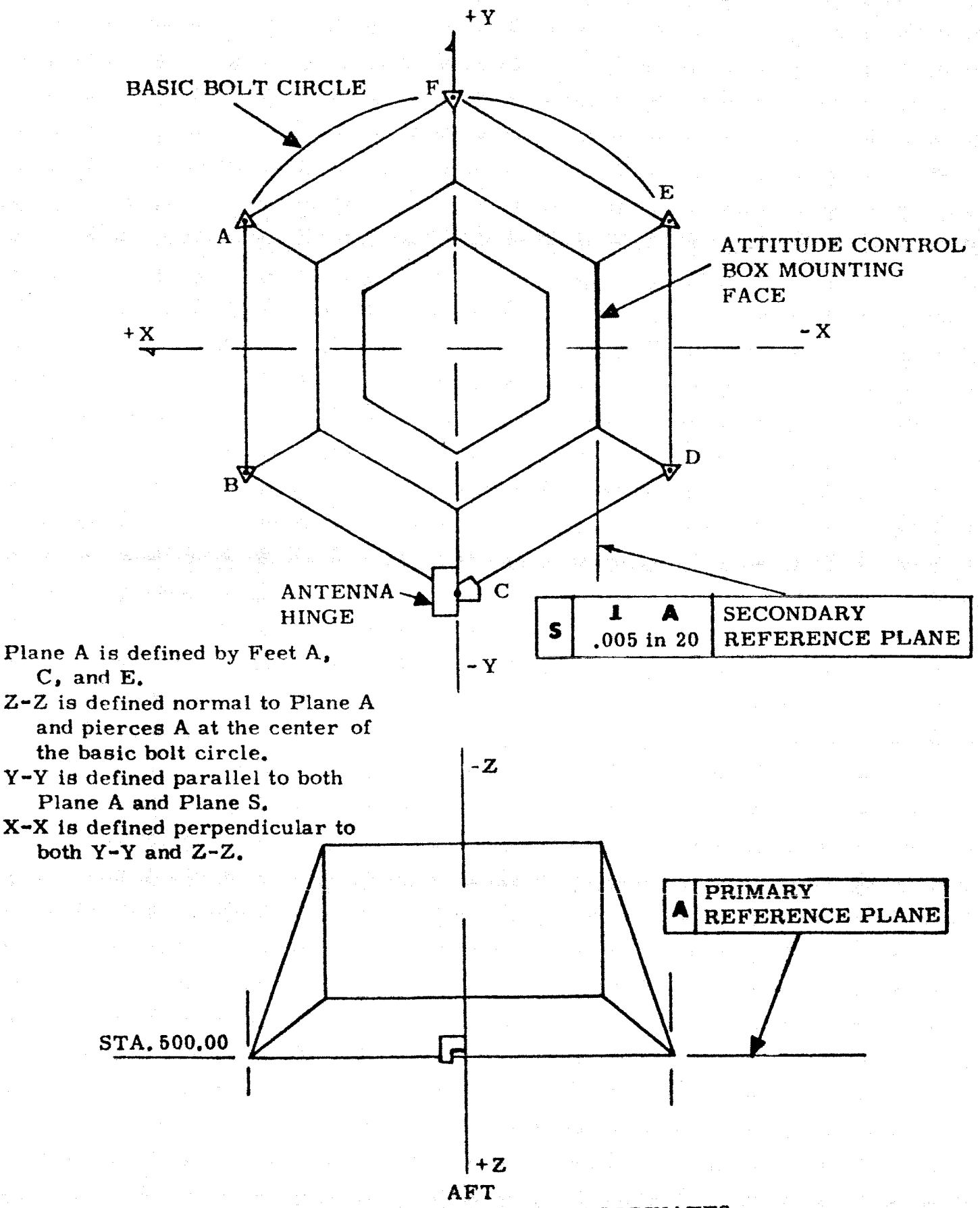

FIGURE 4-1 SPACECRAFT COORDINATES

YZ plane after spacecraft separation.

The antenna nests aft of the spacecraft airframe inside the Agena adapter. Its axis concides with the spacecraft's longitudinal axis. During powered flight, this structure is constrained by snubbers. Six are attached to the spaceframe and six are attached to the Agena adapter. After spacecraft separation the adapter with its lower snubbers is no longer present, so that the antenna can be rotated without the use of disconnect devices. Snubbers attached to the spaceframe shall be adjustable to allow for proper fitting.

3.4.4 Midcourse Propulsion Assembly

The midcourse propulsion system function is to remove or reduce injection dispersion errors. The assembly is located in the center of spaceframe such that the thrust axis of the propulsion assembly lines up with the roll axis of the spaceframe.

4. DEFINITION OF SPACECRAFT COORDINATE SYSTEM

This section defines precisely the existing spacecraft coordinate system to be used in all mounting and machining, all dimensions, alignments, and tolerances referred to spacecraft coordinates.

The bases of this coordinate system are two planes. The primary reference plane is defined by three of the six spacecraft mounting feet, A, C, and E, as shown in figure 4-1. The secondary reference plane is the mounting plane of the attitude control assembly machined perpendicular to the primary reference plane within 0.005" in 20".

The coordinate system consists of three mutually perpendicular reference lines; the pitch (X), yaw (Y), and roll (Z) reference lines, which form a conventional Cartesian coordinate system. The roll reference line is defined normal to the primary reference plane with +Z aft and it passes through the center of the basic bolt circle. The yaw reference line is defined parallel to the secondary reference plane with +Y opposite the directional antenna. The pitch reference line is then defined such as to form a right hand system. The reference lines intersect at the origin. The origin is located such that the primary reference plane becomes station Z=500. These definitions are shown in figure 4-1.

Positive pitch, yaw and roll angles and moments are defined as clockwise when looking from the origin along the positive reference lines. These are shown in figure 4-2.

This is a conventional right hand coordinate system in all respects.

3.2 Assemblies

3.2.1 Spaceframe

3.2.2 Solar Panels

3.2.3 Antenna - High Gain

3.2.4 Midcourse Propulsion Assembly

3.2.5 TV Subsystem Tower and Low-Gain Antenna

3.2.6 Science Sensors

3.3 Design Constraints

Design constraints are given in Functional Specification RL-4-511.

3.4 Descriptions

3.4.1 Spaceframe

The spaceframe will serve as a communicating attitude controlled platform in space for the purpose of conducting scientific experiments. The spaceframe must house all attitude control systems, guidance control systems, communications, telemetry, and power supplies to perform this task. The above functions will be housed in six cases which are attached to a hexagonal framework. A midcourse propulsion system will be housed in the center of the hexagonal framework. Solar panels will be attached to the framework to serve as the power supply. A high gain antenna is also attached to the spaceframe to provide the communications. The TV subsystem is mounted on top of the spaceframe and will have the omniantenna firmly attached at its apex.

3.4.2 Solar Panels

Spacecraft power will be supplied by two panels of approximately ten square feet each. The panels, hinged at the bottom, will be supported in a near vertical position during powered flight to withstand the flight loads. After spacecraft separation, the panels are folded outward into a horizontal position, locating the cells approximately perpendicular to the sun's rays. The two panels are placed diametrically opposite one another on two of the flats of the hexagonal spaceframe structure.

An actuator opens the solar panels into the XY plane, and locates them normal to the roll axis.

3.4.3 Antenna - High Gain

The high gain antenna consists of a four-foot diameter, parabolic dish with a f/d ratio of 0.35. The antenna shall be hinged on one axis to provide it with rotational movement of 180 degrees in the

(Insert in Spacecraft Design Specification Book)

APPROVED:

SYSTEMS: M. R. Mesnard

SUBSYSTEMS: Bruce C. Jones

JET PROPULSION LABORATORY

Spec. No. RL-4-520
15 January 1962

FUNCTIONAL SPECIFICATION
RANGER RA-6 (P-53) THROUGH RA-9 (P-56) SPACECRAFT
STRUCTURES SUBSYSTEM

---

1. SCOPE

This functional specification covers the basic design criteria for the Ranger 6 through 9 spacecraft structure.

2. APPLICABLE DOCUMENTS

2.1 The following documents apply to this specification:

SPECIFICATIONS

Jet Propulsion Laboratory

Ranger Spacecraft Design Specification Book
P53, 54, 55, and 56 (RA 6 through RA 9)

3. REQUIREMENTS

3.1 The Ranger spacecraft structure shall be such that it will serve as a base for communication, telemetry, attitude control, power supply, TV subsystem and scientific experiments and will also meet constraints set upon it by the external dimensions of the Atlas/Agena configurations.

(Insert in Spacecraft Design Specification Book)

APPROVED:
System: M. R. Mesnard
Subsystem: J. D. Quinn

JET PROPULSION LABORATORY

Spec. No. RL-4-530 A
30 November 1962

✱ DENOTES CHANGE

SUPERSEDES
RL-4-530
2 February 1962

FUNCTIONAL SPECIFICATION
RANGER P-53 (RA-6) Thru P-56 (RA-9) SPACECRAFT
PYROTECHNIC SUBSYSTEM

1.0 SCOPE

1.1 This functional specification covers the Squib Firing Assembly of the extension system for Ranger Spacecraft RA-6 through RA-9.

✱ 2.0 APPLICABLE DOCUMENTS

2.1 The latest issues of the following documents form a part of this specification:

SPECIFICATIONS

Jet Propulsion Laboratory

Ranger Spacecraft Design Specification Book, RA-6 Thru RA-9

DRAWINGS

Jet Propulsion Laboratory

D-121 752	Pyrotechnic Subsystem Block Diagram
J-317 2310	Squib Firing Assembly Schematic Diagram

3.0 REQUIREMENTS

3.1 General

The initiation of the spacecraft pyrotechnic devices (squibs) is divided into three time-separated events. At each event, one or more groups of squibs are to be initiated. The squib firing assembly shall be capable of receiving three similar control signals (one at each of three events) and of switching sufficient electrical energy to reliably initiate the squibs which are to be fired at that event. The squib firing assembly shall prevent the occurrence of excessive power demands on the main spacecraft battery due to a post-fire short condition in a squib, and provide a safe-arm function for safety.

3.2 Power

Control power and squib initiation power shall be obtained from the main spacecraft battery. The squib firing assembly shall require a voltage between 23.5 and 20.0 volts (battery terminal voltage).

3.2.1 Control Power

Total control current required of the main battery shall be less than 0.25 ampere for less than 1.5 seconds for events 1 through 3.

3.2.2 Squib Initiation Power

The maximum power required for squib initiation shall be 25 amperes at event 1, and 16 amperes at subsequent events.

3.3 Triggering

The control trigger required at each of the three events shall be supplied by the central computer and sequencer (CC&S), or by the back-up timer (Ranger 7 and subsequent) for SFA event 1 (Solar Panel Deployment). The triggering at each event shall be accomplished by the closure of one set of normally open contacts. DC voltage shall be obtained from the main battery, routed from the squib firing assembly through the back-up timer or CC&S contacts and upon contact closure, back to the squib firing assembly. Current drawn through either set of contacts shall be less than 0.100 ampere per contact, with a rise rate of less than 50 ma/microseconds, or less than 150 ma with a rise rate of less than 0.25 ma/microseconds.

3.4 Event 3 Actuating Time

For event 3 (midcourse motor shutoff), the time period between the receipt of the CC&S command and the delivery of current to the squibs shall be less than 10 milliseconds and repeatable within ±5 milliseconds.

3.5 Cabling

Total loop resistance between the main spacecraft battery terminals and the squib firing assembly shall be less than 0.06 ohm. Total loop resistance between the squib firing assembly and any given squib location shall be less than 0.25 ohm. Readily accessible connections to each squib harness shall be provided for safety and continuity checking.

3.6 Redundancy

All actuation devices shall be supplied with two independent electrical squib-initiation circuits. Redundancy shall start at the input of, and be within the pyrotechnic subsystem.

3.7 Output

At a given event, each squib to be initated shall be supplied with not less than 125 percent of the rated all-fire current value for a period of 0.85 ±0.15 seconds, assuming the worst combination of conditions as defined in this specification. This current shall be supplied to the remaining squibs, even though one-third of the squibs have shorted. The current delivered to each squib under nominal conditions shall be in the order of 145 percent of the rated all-fire current value, and shall be supplied for 0.85 ±0.15 seconds. The loads seen by the squib firing assembly are shown in Table I.

3.8 Safe-Arm Function

The control voltage supplied to the CC&S and the back-up timer (RA-7 and subsequent), and the squib firing voltage shall be routed through a safe-arm circuit within the squib firing assembly. This circuit shall be armed by actuation of either of a pair of inertial switches. The arming of the circuit shall occur when an acceleration of 4.5g occurs for at least 3.4 seconds; the circuit shall not arm with less than 2.5g applied indefinitely.

3.9 Weight

The weight of the squib firing assembly shall be a minimum, not to exceed the allocation in the current issue of the Design Parameter and Reference Designation Functional Specification, RL-4-120.

3.10 Telemetry

The squib initiation current shall be routed through the primary of a toroidal transformer. The secondary of this transformer shall be routed to the data encoder to give indication of current delivery at each of the three events on binary channel B2(2) - code 1100.

The output of the SFA current-transformer secondary at each event shall be a positive voltage pulse of from 7 to 11 volt peak amplitude with rise time of less than 5.0 microseconds to 7 volts.

3.11 Spare Event

Circuitry shall be incorporated for an event which shall be considered as a spare. This circuit shall be redundant, and shall be capable of momentary 850 milliseconds or continuous output upon continuous command. No provisions shall be made for delay after the receipt of a command, or for relative delay between the actuation of the redundant channels.

Each redundant channel shall have a dual output. The value of the current limiting resistors shall be compatible with squibs having an all-fire current of 2.0 amp and bridgewire resistance of 1.5 ohms.

Table I

SFA Event	Time		Function	Device Actuated			Squib Characteristics						Maximum Total Current Required (Battery Terminal Voltage: 20.0 VDC)			
													Midcourse Motor Burn Greater Than 1 Sec.		Midcourse Motor Burn Equal 50 Millisec.	
	Command Given	SFA Output Pulse Delivered		Type	Quan.	No. of Squibs Actuated per Device	No. of Bridge-wires per Squib	Total No. of Bridge-wires	Bridgewire Resistance (ohm)	No-Fire Current (amp)	All-Fire Current (amp)	Min Current Per Bridgewire (amp)	Peak (25 ms) (amp)	Ave. (1 sec.) (amp)	Peak (25 ms) (amp)	Ave. (1 sec.) (amp)
1	A+30 M) (CC&S A-2)		Solar Panel Deployment	Pin Puller	4	2	1	8	1.5±0.3	0.5	2.0	2.5	23	11	NA	NA
2	B+26.5 M) (CC&S B-3)		Midcourse Motor Ignition	Valve	3	1	2	6	0.67±0.13	0.5	2.0	2.5	16	6	NA	NA
3	B+26.5M +0.05S to B+27.5M	(+.005±.005)S	Midcourse Motor Shutoff	Valve	2	1	2	4	0.67±0.13	0.5	2.0	2.5	11	4	16	11
4			Spare					4	1.5±0.3		2.0	2.5	NA	NA	NA	NA

(Insert in Spacecraft Design Specification Book)

APPROVED:
System: M. R. Menard
Subsystem J. D. Quinn

JET PROPULSION LABORATORY

Spec. No. RA345-4-530 E
7 November 1962

✱ DENOTES CHANGE

SUPERSEDES:
RA345-4-530 D
2 February 1962

FUNCTIONAL SPECIFICATION
SPACECRAFT RA 3, 4, AND 5 FLIGHT EQUIPMENT
PYROTECHNIC SUBSYSTEM

1.0 SCOPE

This functional specification covers the Squib Firing Assembly of the extension system for Ranger Spacecraft RA 3, 4, and 5.

✱ 2.0 APPLICABLE DOCUMENTS

The latest issues of the following documents form a part of this specification:

SPECIFICATIONS

Jet Propulsion Laboratory

Spacecraft Design Specification Book, Ranger A3, A4, and A5

DRAWINGS

Jet Propulsion Laboratory

J 317 2298	Squib Firing Assembly Schematic Diagram
C 121 267	Pyrotechnic Subsystem Block Diagram

3.0 REQUIREMENTS

3.1 General

The initiation of the spacecraft and capsule pyrotechnic devices (squibs) is divided into seven time-separated events. At each event, one or more groups of squibs are to be initiated. The squib firing assembly shall be capable of receiving six similar control signals (one at each of six events) and of switching sufficient electrical energy to reliably initiate the squibs which are to be fired at that event. In addition, the squib firing assembly will furnish a voltage for the occurrence of the seventh event which is switched elsewhere. The squib firing assembly shall also prevent the occurrence of excessive power demands on the main spacecraft battery due to a post-fire short condition in a squib, and provide a safe-arm function for safety.

3.2 Power

Control power and squib initiation power shall be obtained from the main spacecraft battery. The squib firing assembly shall require a voltage between 23.5 and 20.0 volts (battery terminal voltage) and shall require a maximum of 25 amperes.

3.2.1 Control Power

Total control current required of the main battery shall be less than 0.25 ampere for less than 1.5 seconds for events 1 through 4. For event 5, the time shall be less than 2.8 minutes. For event 6, the time shall be less than 1.7 minutes.

3.2.2 Squib Initiation Power

The maximum power required for squib initiation shall be 25 amperes at event 1, and 16 amperes at subsequent events (see table I).

3.3 Triggering

The control trigger required at each of the first six events shall be supplied by the central computer and sequencer (CC&S) (or by the command system for event 6). The triggering at each event shall be accomplished by the closure of one set of normally open contacts. DC voltage shall be obtained from the main battery, routed from the squib firing assembly to the contacts and upon contact closure, back to the squib firing assembly. Current drawn through the contacts shall be less than

0.100 ampere per contact, with a rise rate of less than 50 ma/microsecond, or less than 150 ma with a rise rate of less than 0.25 ma/microsecond. The normally closed (reset) contacts in the CC&S shall be tied to the dc return supplied from the squib firing assembly (except for event 6). Event 6 may be initiated by the command system. The SFA shall be capable of delivering sufficient current to actuate the thermal relays associated with this event, with a minimum trigger-on time of 100 milliseconds.

3.3.1 Event 5 Delay

The CC&S command (SC-6) for event 5 will be delivered at C + 21.5 minutes to C + 29 minutes. After receiving this command, the squib firing assembly shall insert a 2.0 ± 0.2 minute delay before delivering initiation current to one squib on the vidicon cover latch and to both squib actuated bolt cutters on the altimeter antenna deployment device. The SFA shall insert a 2.5 ± 0.2 minute delay on the redundant timing channel before delivering initiation current to the redundant squib on the vidicon cover latch and to both squibs on the low-gain antenna deployment latch.

3.3.2 Event 3 Actuating Time

For event 3 (midcourse motor shutoff), the time period between the receipt of the CC&S command and the delivery of current to the squibs shall be less than 10 milliseconds and repeatable within ± 5 milliseconds.

3.4 Cabling

Total loop resistance between the main spacecraft battery terminals and the squib firing assembly shall be less than 0.06 ohm. Total loop resistance between the squib firing assembly and any given squib location shall be less than 0.25 ohm. Readily accessible connections to each squib harness shall be provided for safety and continuity checking.

3.5 Redundancy

All actuation devices except the altimeter antenna bolt cutters and the low-gain antenna latch shall be supplied with two independent electrical squib initiation circuits. Redundancy shall start at the input of, and be within the pyrotechnic subsystem. For events 2 and 3 on RA 3 and RA 4, where redundant squibs are not used, the redundancy within the squib firing assembly shall terminate at the input to the current-limiting resistor.

3.6 Output

At a given event, each squib to be initiated shall be supplied with not less than 125 percent of the rated all-fire current value for a period of 0.85 ± 0.15 seconds, assuming the worst combination of conditions as defined in this specification. This current shall be supplied to the remaining squibs, even though one-third of the squibs have shorted. The current delivered to each squib under nominal conditions shall be in the order of

145 percent of the rated all-fire current value, and shall be supplied for 0.85 ±0.15 seconds. The loads seen by the squib firing assembly are shown in Table I.

3.7 Safe-Arm Function

The control voltage supplied to the CC&S and the squib firing voltage shall be routed through a safe-arm circuit within the squib firing assembly. This circuit shall be armed by actuation of either of a pair of inertia switches. The arming of the circuit shall occur when an acceleration of 4.5 g occurs for 3.4 seconds or longer; the circuit shall not arm with less than 2.5 g applied indefinitely.

The "safed" voltage shall be routed to the fusing switch in the altimeter capsule system for the occurrence of event 7 and shall not be switched by the squib firing assembly.

3.8 Weight

The weight of the squib firing assembly shall be a minimum, not to exceed the allocation in the current issue of the Design Parameter Functional Specification RA345-5-120.

3.9 Telemetry

The squib initiation current, including that supplied to the fusing switch, shall be routed through the primary of a toroidal transformer. The secondary of this transformer shall be routed to the data encoder to give indication of current delivery at 1, 2, 3, 4, 5A, 5B, 6, and 7 (see table I) on binary channel B2(2) - code 1100.

The output of the SFA current-transformer secondary at each event shall be a positive voltage pulse of 7 to 11 volt peak amplitude with rise time of less than 5 microseconds to 7 volts.

Table I

SFA Event	Time: Command Given	Time: SFA Output Pulse Delivered	Function	Device Actuated: Type	Device Actuated: Quan.	Device Actuated: No. of Squibs Actuated per Device	Squib Characteristics: No. of Bridge-wires per Squib or Relay	Squib Characteristics: Total No. of Bridge-wires	Squib Characteristics: Bridgewire Resistance (ohm)	Squib Characteristics: No-Fire Current (amp)	Squib Characteristics: All-Fire Current (amp)	Squib Characteristics: Min Current Per Bridgewire (amp)	Maximum Total Current Required (Battery Terminal Voltage: 20.0 VDC): Midcourse Motor Burn Greater Than 1 Sec.: Peak (25 ms) (amp)	Midcourse Motor Burn Greater Than 1 Sec.: Ave. (1 sec.) (amp)	Midcourse Motor Burn Equal 50 Millisec.: Peak (25 ms) (amp)	Midcourse Motor Burn Equal 50 Millisec.: Ave. (1 sec.) (amp)
1	A+30 M) (CC&S A-2)		Solar Panel Deployment	Pin Puller	4	2	1	8	1.5±0.3	0.5	2.0	2.5	23	11	NA	NA
2	B+26.5 M) (CC&S B-3)		Midcourse Motor Ignition	Valve	3	1	1 2	3 6	0.67±0.13	0.5	2.0	3.0 2.5	10 16	4 6	NA	NA
3	B+26.5M +0.05S to B+27.5M	(+.005±.005)S	Midcourse Motor Shutoff	Valve	2	1	1 2	2 4	0.67±0.13	0.5	2.0	3.0 2.5	6 11	3 4	10 16	8 11
4	B+2.5 H) (CC&S B-7)		γ-Ray Boom Deployment	Pin-Puller	1	2	1	2	1.5±0.3	0.5	2.0	2.5	3	3	NA	NA
5A 5B	(C+21.5M to (C+29M (CC&S C-2)	(+2.0±0.2)M (+2.5±0.2)M	Altimeter Antenna Deploy Vidicon Lens Cover Lo-Gain Antenna Deploy Vidicon Lens Cover	Bolt Cutter Pin Puller Pin Puller Pin Puller	2 1 1 1	1 1 2 1	1 1 1 1	2 1 2 1	1.0±0.3 1.5±0.3 1.5±0.3 1.5±0.3	0.5 0.5 0.5 0.5	2.0 2.0 2.0 2.0	2.5 2.5 2.5 2.5	10 10	4 4	NA NA	NA NA
6	(I-60±39.4S) (CC&S C-3 or RWV or C/D: RTC-7)		Altimeter Turn On Sci. Commutation Init.	Thermal Relay Thermal Relay	1 1	- -	1 1	1 1	1.35±0.15 1.35±0.15	0.8 0.8	1.2 1.2	3.7 3.7	10 amp for 100 ms		NA	NA
7	(I-8.1S)		Capsule Separation Capsule P & SA Timer Start	Bolt Cutter Squib Switch	4 2	1 1	1 1	4 2	1.0±0.3 7±2	0.5 0.07	2.0 0.7	2.1 0.9	12 amp for 100 ms		NA	NA

(Insert in Spacecraft Design Specification Book)

APPROVED:

System: M. R. Menard

Subsystem: M. Perrup

JET PROPULSION LABORATORY

Spec. No. RL-4-540

8 January 1962

FUNCTIONAL SPECIFICATION

RANGER RA-6(P-53) THRU RA-9(P-56) SPACECRAFT FLIGHT EQUIPMENT

TEMPERATURE CONTROL SUBSYSTEM

1.0 SCOPE

This specification covers the functional requirements for the Ranger 6 through 9 spacecraft Temperature Control Subsystem. Definition of the subsystem and its boundaries is also presented.

2.0 DESCRIPTION

The temperature control subsystem for Ranger 6 through 9 is a passive subsystem that will maintain the temperature of the spacecraft functional components within the required limits as specified by the respective component cognizant engineers. Passive temperature control is defined as control without using moving parts or fluids. Control is achieved by the proper selection of surface finishes and by controlling spacecraft internal heat transfer capabilities. Thus, spacecraft local temperatures are the composite result of solar energy absorption, energy absorption from earth, radiation of energy into space, heat from internal power dissipation, and heat transferred to or from other spacecraft components.

Primary emphasis shall be on the selection of local surface treatments and coatings that will provide local equilibrium temperatures within the specified ranges during normal sun stabilized flight attitude. In addition, the local surface treatments and coatings should maintain the component and instrument temperatures and temperature gradients within required limits for the duration of the various transient conditions.

The following transient conditions will be considered in the design of the temperature control subsystem:

a. Heating during the countdown (with Agena shroud cooling, but accounting for shroud cooling failure and before power cut-off).

b. Radiant heat from aerodynamic heating of the shroud.

c. Shroud-off aerodynamic heating (assuming parking orbit >85 miles).

d. Shroud-off earth shadow cooling (assuming in earth's shadow <45 minutes).

e. Parking orbit attitude in the sunlight (less than 30 minutes).

f. Random tumbling in the sunlight (less than 30 minutes).

g. Variations of the internal power dissipation (±10 watts).

h. Midcourse maneuver (any attitude up to one (1) hour).

i. Terminal maneuver:
   (1) Camera positioning along velocity vector
   (2) Warm-up period
   (3) Operation

3.0 REQUIREMENTS

3.1 General

Temperature control of the spacecraft requires a cognizance of thermal design philosophy at all levels of system design, i.e., component, subassembly, assembly, and system. Therefore, certain requirements covered in this specification are pertinent to the packaging and grouping of components and subassemblies and should be used as guidelines wherever possible. Responsibility for the temperature control subsystem, as defined in this specification, shall begin at the assembly level with the specification of the exterior surface finish. Assembly specifications shall accept all temperature control provisions external to the assembly which are sufficient to maintain assembly surface temperatures within specified limits.

3.2 Temperature Control

The temperature control subsystem shall maintain the surface temperature of all temperature sensitive components within a specified temperature range over the intended life of the component and under all anticipated conditions of use.

3.3 The execution of temperature control shall not require the use of circulating or statically contained fluids.

3.4 Electrical Power Dissipation

The electrical power dissipated in electronics (or other) equipment attached to the "hex" structure shall be distributed among the various boxes as uniformly as practicable. Furthermore, the electrical power dissipated within each individual assembly shall be distributed within that assembly as uniformly as practicable.

3.5 Conduction Paths

Good thermal conduction paths shall be provided between subassemblies and the assembly chassis (box).

3.6 Component Surfaces

A specified surface finish or treatment may be required on all components or assemblies which require temperature control.

3.7 Surface Protection

In order to maintain the integrity of the surface finishes applied to the various parts of the spacecraft, it will of necessity be the mutual responsibility of the cognizant subsystem, system, and temperature control respresentatives to insure that contamination and/or degradation of the surfaces does not occur. Protection shall include mechanical protection and careful handling to avoid fingerprinting, oil contamination, and abrasion.

3.8 Surface Cleaning

The surfaces shall be cleaned by the temperature control engineer immediately prior to flight, and before each space chamber temperature test.

3.9 Temperature Limits

The maximum and minimum temperatures shown in table I are required, as specified by the cognizant engineers, of each item.

3.10 Sterilization

Surface finishes and all other temperature control techniques shall be capable of withstanding 125°C. stabilized for 24 hours and ethylene oxide - freon gassing for a minimum of 10 hours without thermal controlling degradation.

Table I

		Operating Temperature
a.	Cases I, II, III and V	0° to 70°C
b.	Case IV	13° to 46°C
c.	Case VI	10° to 55°C
d.	Earth Sensor	-10° to 38°C
e.	Sun Sensors - Primary	13° to 46°C
f.	Sun Sensors - Secondary	-75° to +75°C
g.	Solar Panels	-75° to 125°C
h.	Attitude Control Jets, Regulator, and Tubing	5° to 70°C
i.	Omni-Antenna	-100° to 200°C
j.	Dosimeters	-10° to 100°C
k.	Ion Chamber	0° to 70°C
l.	Geiger Tubes	0° to 70°C
m.	Spacecraft Structure	-75° to +120°C
n.	Earth Sensor Gear Box	-24° to +125°C
o.	Midcourse Propulsion System	+2° to +52°C
p.	Attitude Control Gas Supply	+5° to 35°C
q.	Ranging Experiment	+0° to 70°C

(Insert in Spacecraft Design Specification Book)

APPROVED:

System: M. R. Menard

Subsystem: Bruce W. Schmitz

JET PROPULSION LABORATORY

Spec. No. RL-4-610 A

20 March 1962

SUPERSEDES:

RL-4-610
5 December 1961

P-53 (RA-6) THROUGH P-56 (RA-9) SPACECRAFT

FUNCTIONAL SPECIFICATION

MIDCOURSE PROPULSION SYSTEM

✱ Indicates Change

1.0 SCOPE

This functional specification covers the design requirements, system description, and inflight operation of the midcourse propulsion system for the RA-6, 7, 8, and 9 spacecraft. This specification relates to other spacecraft systems only to the extent of detailing the functions which the midcourse propulsion system must perform in conjunction with other spacecraft systems.

2.0 APPLICABLE DOCUMENTS

✱ 2.1 The following documents form a part of this specification:

SPECIFICATIONS

Jet Propulsion Laboratory

Spacecraft Design Specification Book,
RA6 through RA9

DRAWINGS

Jet Propulsion Laboratory

J 315 1744	Structure, Midcourse Propulsion Unit, Installation
D 315 7300	Midcourse Propulsion System, Monopropellant-Hydrazine, Schematic (50-pound thrust)

3.0 REQUIREMENTS

3.1 General

The midcourse propulsion system function is to remove or reduce injection dispersion errors. At the time of the midcourse maneuver (16 or 40 hours after launch) the spacecraft is directed to turn to a prescribed position in space whereupon the midcourse propulsion system imparts a corrective impulse.

3.2 Design Requirements

The following design requirements for the midcourse propulsion system are a result of spacecraft physical and operational restraints, Agena injection guidance accuracies, and ground and inflight environment conditions.

a. The unit will have the capability (by virtue of the propellant tank size) of imparting a velocity increment of at least 200 feet per second to a 775 pound spacecraft.

b. The unit must be capable of vacuum environment storage in excess of 50 hours.

c. The unit must ignite and operate in a hard vacuum environment.

d. The unit must undergo ignition and operate in a gravitationless environment.

e. The propulsion system must be capable of one ignition and one termination.

f. The rocket engine nominal thrust shall be 50 pounds (vacuum) and shall be predictable to within ±5 percent.

g. The propulsion system shall be capable of operating between +35°F and 125°F. However, it is desired that the temperature environment after the vehicle is fully assembled and during the launch countdown be maintained such that the minimum propellant temperature shall not go below 65°F. This requirement is necessitated by the present uncertainty in the inflight spacecraft temperature environment. This uncertainty might result in a propulsion system temperature below

+35°F at the time of firing if the propellant were not at least 65°F at launch.

h. The spacecraft shall be essentially stationary in attitude (not spinning).

i. The volume within the spacecraft available to the propulsion system consists of the volume bounded on the sides by the internal hexagonal structure supporting the electronic chassis; on the top by the upper surface of the hexagonal compartment; and on the bottom by an imaginary plane several inches below the lower surface of the hexagonal compartment consistent with the closed position of the antenna.

j. The thrust axis of the rocket motor must nominally coincide with the spacecraft roll reference line and be laterally adjustable upon assembly within a two-inch diameter circle about this reference line.

k. The effective thrust vector shall be predicable to within a 0.1 degree angular displacement and 1/16-inch lateral offset of the geometrical motor centerline.

l. Thrust vector control shall be provided by four (4) jet vanes capable of a maximum pitch and yaw restoring moment about the vehicle center of gravity of 3.2 foot-pounds and a minimum roll moment of 0.1 foot-pounds.

4.0 SYSTEM DESCRIPTION

A schematic of the midcourse propulsion system is shown in figure 1. The system utilizes a liquid monopropellant, anhydrous hydrazine, as the propellant. It is functionally a regulated-gas-pressure-fed-constant-thrust rocket. Principal system components consist of a high-pressure gas reservoir, a gas pressure regulator, a propellant tank, and a rocket engine. The rocket engine contains a quantity of catalyst to accelerate the decomposition of hydrazine. Explosively actuated valves are used throughout the system. Normally closed explosively actuated valves are activated to initiate nitrogen pressurization of the propellant tank, to initiate propellant flow to the rocket engine, and to release nitrogen tetroxide from the engine ignition cartridge. Normally open explosively actuated valves are activated to terminate nitrogen pressurization of the propellant tank and propellant flow to the rocket engine. Dual bridge wire pyrotechnics will be used in each explosively actuated valve for the purpose of attaining a higher degree of reliability.

The design and operational philosophy of the system represented in figure 1. is directed toward maximizing system reliability and reproducibility, minimizing preflight handling and spacecraft interactions, minimization of inflight electrical signals, and minimization of system components. In order to avoid electrical or mechanical sequencing, the propellant tank is prepressurized with nitrogen during the preflight operation so that engine ignition and regulated nitrogen pressurization of the propellant tank can occur simultaneously through one signal from the CC&S. Similarly, only one signal is necessary for thrust termination; therefore, a total of two

(2) signals are required by the midcourse propulsion system for impulse initiation and termination.

A nominal engine performance summary is given in table I, and nominal system pressures and temperatures are shown in tables II and III, respectively.

5.0 INFLIGHT OPERATION

The firing of the midcourse propulsion system is controlled by the CC&S which receives the time, direction, and magnitude of the midcourse firing through the ground communication link. After the spacecraft has assumed the correct firing attitude (maneuver being executed at either 16 or 40 hours after launch), the midcourse propulsion system is ignited (at the prescribed time) through an electrical signal from the spacecraft's squib firing assembly, which has been initiated by the CC&S. Inasmuch as the propellant tank is prepressurized, the rocket engine ignition can occur concomitantly with the release of the high pressure nitrogen to the regulator without allowing time for the propellant tank pressures to build up to the normal operating level. Thrust termination is controlled by the CC&S via an electrical signal through the squib firing assembly once the specified velocity increment has been realized as computed by the spacecraft integrating accelerometer. During the rocket engine firing, spacecraft attitude is maintained by the autopilot-controlled jet vane actuators.

The specific sequence of events for the propulsion system subsequent to spacecraft orientation and up to thrust termination are as follows:

a. At the command signal from the CC&S and squib firing assembly to ignite the rocket, normally closed explosive valves 15, * 8 and 4 are activated allowing regulated nitrogen pressurization of the propellant tank, propellant flow to the rocket engine, and injection of a small quantity of nitrogen tetroxide to the rocket engine (* Refer to figure 1).

b. Hyperbolic ignition ensues, followed by continuous catalytic monopropellant decomposition of the anhydrous hydrazine.

c. At the command signal from the CC&S and squib firing assembly to terminate rocket thrust, normally open explosively actuated valves 7 and 21 are activated, terminating propellant flow to the rocket engine and positively isolating the remaining pressure in the nitrogen sphere from the propellant tank.

TABLE I

NOMINAL ENGINE PERFORMANCE

SUMMARY

(WITHOUT JET VANES)

Vacuum Specific Impulse, $I_{s_{vac}}$	230 $\frac{\text{pounds-second}}{\text{pound}}$
Vacuum Thrust, F_{vac}	50.0 pounds
Propellant Flow Rate, $\dot{w}$	0.217 pounds per second
Characteristic Velocity, c^*	4250 feet per second
Vacuum Thrust Coefficient, $C_{F_{vac}}$	1.741
Chamber Stagnation Pressure, p_c	191.5 psia
Throat Area, A_t	0.15 square inch
Expansion Ratio, ϵ	44
Specific Heat Ratio, $\bar{\gamma}$	1.27

* TABLE II

NOMINAL SYSTEM PRESSURES

ITEM	NOMINAL PRESSURE, PSIA
Nitrogen Reservoir, at Ignition	3,000
Nitrogen Reservoir, at Termination (maximum duration run)	500
Propellant Tank, Prepressurization	275
Propellant Tank, Operating	320
N_2O_4 Ignition Cartridge, at Ignition	350
N_2O_4 Ignition Cartridge, at Termination	210
Chamber Pressure, Average*	200

* Represents stagnation pressure at midpoint of thrust chamber and catalyst bed.

* TABLE III

NOMINAL SYSTEM TEMPERATURES

ITEM	NOMINAL TEMPERATURE °F
Nitrogen Reservoir, at Ignition	70
Nitrogen Reservoir, at Termination (maximum duration run)	-40
Propellant Tank	70
Thrust Chamber Wall	1800-1900

INSTRUMENTATION SUMMARY

PRESSURE

- P_1 NITROGEN TANK
- P_2 PROPELLANT TANK

PRESSURE MONITORING GAGES

- G_1 NITROGEN TANK
- G_2 PROPELLANT TANK
- G_3 IGNITION CARTRIDGE RESERVOIR

TEMPERATURE

- T_1 ROCKET MOTOR
- T_2 PROPELLANT TANK
- T_3 NITROGEN TANK

SYMBOL LEGEND

E	2-WAY VALVE, EXPLOSIVE OPERATED
M	ANGLE VALVE, MANUAL OPERATED
	BURST DIAPHRAGM
FILTER	FILTER
	PRE-SET REGULATOR
	PRESSURE GAGE (VISUAL)
17	COMPONENT NUMBERS
P_1	INSTRUMENTATION NUMBERS
	CAPPED TUBE END

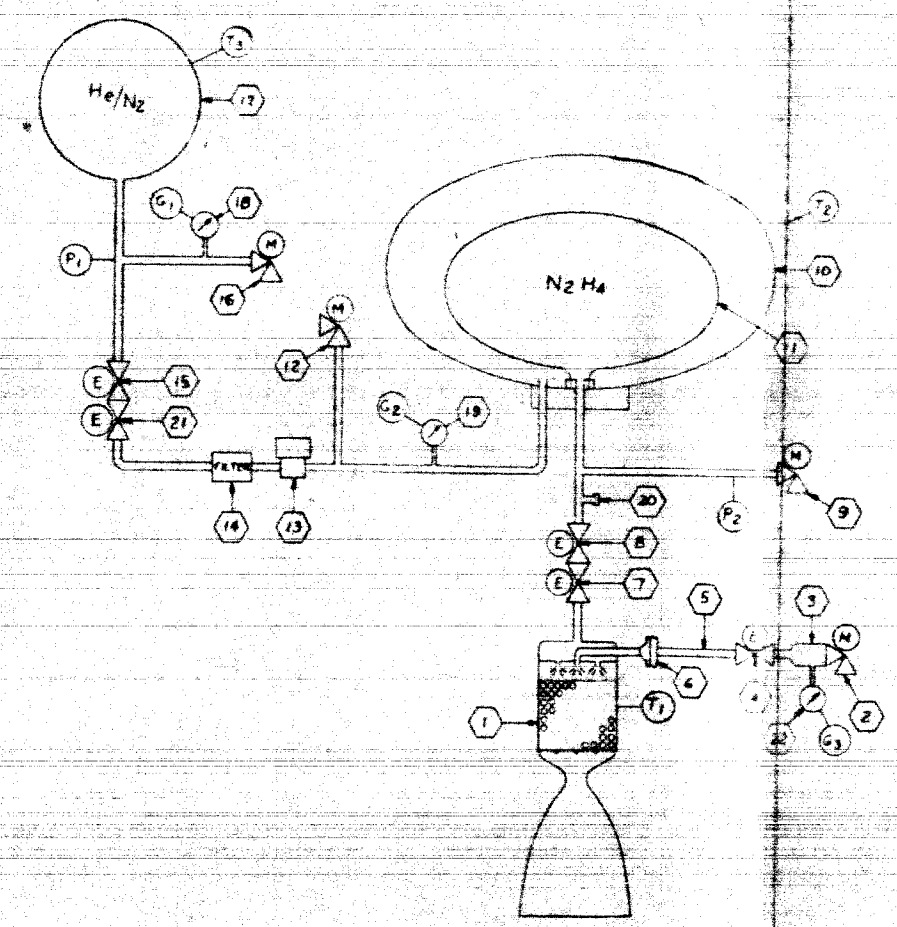

COMPONENT SUMMARY

NO.	DESCRIPTION
1	ENGINE, ROCKET
2	VALVE, GN_2 FILL, IGNITION CARTRIDGE
3	RESERVOIR, GN_2, IGNITION CARTRIDGE
4	VALVE, ACTUATION, IGNITION CARTRIDGE
5	RESERVOIR, OXIDIZER, IGNITION CARTRIDGE
6	DIAPHRAGM, BURST, IGNITION CARTRIDGE
7	VALVE, PROPELLANT, SHUT-OFF
8	VALVE, PROPELLANT, START
9	VALVE, FILL, PROPELLANT TANK
10	TANK, PROPELLANT
11	BLADDER, PROPELLANT TANK
12	VALVE, PRESSURIZATION, PROPELLANT TANK
13	REGULATOR, NITROGEN, PRESSURE
14	FILTER, NITROGEN
15	VALVE, START, NITROGEN
16	VALVE, FILL, NITROGEN TANK
17	TANK, NITROGEN
18	GAGE, PRESSURE, VISUAL, 0-4000 P.S.I.
19	GAGE, PRESSURE, VISUAL, 0-500 P.S.I.
20	BLEED, PROPELLANT FILL
21	VALVE, SHUT-OFF, NITROGEN
22	GAGE, PRESSURE, VISUAL, IGNITION CARTRIDGE, 0-500 P.S.I.

REV		
A	ADDED COMPONENT NO. 21 & RELOCATED NO. 15	
B	ADDED COMPONENT NO. 22	
C	NITROGEN LINES REDESIGNED & ADDED [illegible]	
D	[illegible] ASSY WAS THE DOOR	

3/S 7300 PAGE 5

MID-COURSE PROPULSION SYSTEM, MONOPROPELLANT-HYDRAZINE SCHEMATIC (90 LB. THRUST)

D 3/S 7300

UNCLASS.

2-D-3/S 7300-D

* Figure 1