(Insert in Spacecraft Design Specification Book)

APPROVED:
System: M. R. Mesnard
Subsystem: J. R. Hall
Subsystem: N A Renzetti

JET PROPULSION LABORATORY

Spec. No. RA345-4-332
1 February 1962

FUNCTIONAL SPECIFICATION

SPACECRAFT RANGER RA-3, RA-4, AND RA-5

RADIO AND GROUND TRACKING SUBSYSTEM

DSIF

1.0 SCOPE

1.1 This specification covers the functional requirements for the Ground Radio Subsystem of the Deep Space Instrumentation Facility (DSIF) as required for the Ranger RA-3, RA-4, and RA-5 telecommunication system. Included is a description of the capabilities that are necessary to implement the following functions:

1) Command transmission
2) Telemetry subcarrier recovery
3) Tracking of the spacecraft RF signal
4) Doppler detection
5) Angle tracking

1.2 This specification does not include a description of antenna angle encoding and readout, telemetry data demodulation and recording, or command system encoding.

2.0 APPLICABLE DOCUMENTS

2.1 The following documents form a part of this specification:

SPECIFICATIONS

Jet Propulsion Laboratory

30539 B	Design Specification, Ranger A-3 through RA-5, Ground Equipment Communications System Digital Decommutator and Ground Decoding System
	Ranger A-3, A-4, and A-5 Spacecraft Design Specification Book

2.2 OTHER PUBLICATIONS

Jet Propulsion Laboratory

EPD No. 57	Tracking Information Memorandum 332-13, Volume III, Mission No. RA-3
Technical Memorandum No. 33-26	Deep Space Net System Specification
Technical Memorandum No. 33-27	System Capabilities and Development Schedule of the Deep Space Instrumentation Facility

3.0 GENERAL DESCRIPTION

3.1 General

The DSIF Ground Radio Subsystem for Ranger RA-3, RA-4 and RA-5 shall consist of a Mobile Tracking Station (DSIF 1), and antennas, transmitters, and receivers located at Goldstone, California (DSIF 2 and 3), Woomera, Australia (DSIF 4), and Johannesburg, South Africa (DSIF 5). Provision, where necessary, shall be provided for reception of telemetering data, angle tracking, doppler radial velocity measurement and for transmission of commands to the spacecraft (see section 4.0).

3.2 Transmitters

Radio transmitters for RA-3 shall be available at DSIF 1, and DSIF 3; additionally, for RA-4 and 5, DSIF 5 will have a radio transmitter. The deep space station will have a 200-watt capability and the mobile station a 25-watt capability. The transmitters shall be capable of being phase-modulated. A nominal transmission frequency of 890 mc/s shall be employed.

3.3 Receivers

Radio receivers for RA-3, RA-4, and RA-5 shall be available at all sites. The receivers are of the phase-locking double conversion type, with one reference channel and two angle error channels. A telemetering detection channel shall be provided at all sites. Doppler recovery equipment shall be provided. A nominal reception frequency of 960 mc/s shall be employed. Parametric amplifiers shall be provided to obtain a receiving system excess noise temperature of 220°K. A maser amplifier shall be provided at DSIF 2 for tracking the capsule through the retro-maneuver and shall provide a system noise temperature of less than 75°K.

3.4 Antennas

The radio antennas utilized for RA-3, RA-4, and RA-5 are steerable parabolic reflectors, and shall employ either simultaneous lobing tracking feeds or single-horn-type feeds for low-noise listening. Where a transmitter is employed, the feed shall be diplexed to allow simultaneous transmission and reception. Standard polarization shall be right-hand circular. The deep space stations employ 85-ft-diameter reflectors, and the mobile station employs a 10-ft-diameter reflector.

3.5 Tracking

The basic system philosophy is to provide an angle and RF tracking system and then to utilize this system to send commands to the spacecraft and receive telemetering data signals from the spacecraft.

3.5.1 Angle Tracking

Automatic angle tracking shall be provided through the use of a simultaneous lobing tracking feed, providing angle error signals to amplifiers and to signal detection channels. Tracking rate capabilities of the 85-ft HA-Dec reflectors shall be at least 0.7 deg/sec. Tracking capabilities of the 85-ft Az-El antenna shall be at a rate of at least 2 deg/sec. Tracking capability of the 10-ft mobile station antenna

shall be at a rate of at least 10 deg/sec. Angular tracking accuracy will be specified in Vol. III, TIM 332-13. Programmed digital tracking capability shall be provided at DSIF 2 and 3 only through the use of a coordinate converter. Search capability at all DSIF stations is made possible through the use of a scan generator which provides for spiral or sawtooth commands.

3.5.2 Doppler Tracking (RF tracking)

Both one-way and two-way radial doppler shall be made available. Precision doppler can be made available and is obtained by coherently multiplying the output of the doppler detector by a factor of 30. The following modes shall be available:

1) One-way - Spacecraft to DSIF RF link.

2) Two-way - DSIF to spacecraft; coherent multiplication in spacecraft by 96/89; spacecraft to DSIF.

3) Pseudo two-way - DSIF "A" to spacecraft; coherent multiplication in spacecraft; spacecraft to DSIF "B".

3.6 Communications

3.6.1 Telemetering

Telemetering reception capability for both scientific and engineering data shall be provided. The telemetering system shall be capable of detection and decommutation of FM/PM digital telemetering data. Real-time display of selected engineering data shall be provided. (See JPL Specification No. 30539, Change B.)

3.6.2 Command

A command system shall be provided whose function is the encoding of commands for transmission to the spacecraft. A "read, write, verify" system shall be employed to provide highly reliable command functions.

3.7 Spares

DSIF equipment shall be provided with sufficient spares to enable 100 percent equipment or module backup. Requests for deviations from this requirement shall be treated individually. DSIF 2 and 3 shall share system spares where necessary.

4.0 REQUIREMENTS

4.1 Tracking System Capability

4.1.1 Doppler Tracking

Table I outlines the doppler tracking capability for the DSIF stations.

Table I. Doppler Tracking

DSIF Station	Precision two-way	Precision one-way	Nonprecision one-way
Goldstone Az-El	X	X	-
Goldstone Ha-Dec	X[a]	X	-
Johannesburg	X[b]	X[b]	X[c]
Woomera	-	-	X
Mobile Station	X	X	-

a) Pseudo two-way

b) RA-4 and 5 only

c) RA-3 only

4.1.2 Angle Tracking

The site capabilities and accuracies of the angle tracking system for each station are given in TIM, 332-13, Vol. III, DSIF Angle and Doppler Preflight Calibrations.

4.2 Communications System Capability

4.2.1 Telemetry

The site capabilities and accuracies of the telemetry detection system for each station are given in Table II.

Table II. Ranger 3, 4, & 5 Telemetry Detection Capabilities

Station	Recorded telemetry data	Real-time engineering data at site	Real-time scientific data
Goldstone Az-El	X	X	X[b]
Goldstone Ha-Dec	X[a]	-	-
Johannesburg	X	X	-
Woomera	X	-	-
Mobile station	X	X	-

a) Capsule tracking and backup for Az-El site.

b) Video reception and recording

4.2.2 Command

The site capabilities of the command system for each station are given in Table III.

Table III. Ranger 3, 4, & 5 Command Capabilities

Station	RA-3	RA-4	RA-5
Goldstone Echo Site	X	X	X
Johannesburg	-	X	X
Woomera	-	-	-
Mobile station	-	-	-

4.2.3 Teletype Format

The tracking data to be recorded and the formats used for recording and transmitting, via teletype, are:

STA ID	DCC*	GMT HR MIN SEC	AZIMUTH 0.001 DEG	ELEVATION 0.001 DEG	DOPPLER CPS	DAY OF YEAR
3	000	163042	321322	035214	13214221	113

* Data Condition Code

The foregoing format is for the Goldstone Echo Station, DSIF 3. Formats for the Goldstone Pioneer Station, DSIF 2; Woomera, DSIF 4; and Johannesburg, DSIF 5; are similar except for different Station ID numbers and the substitution of hour angle and declination of azimuth and elevation; respectively. The Mobile Tracking Station format is similar to the Goldstone Echo Site except the DCC code has only 2 digits and the doppler has 8 digits.

4.3 Station Configurations.

Table IV lists the equipment for the Ground Radio Subsystem Deep Space Stations, and Table V lists the equipment for the Mobile Tracking Station. Figures 1 through 6 show the station configurations, with new equipment indicated by solid lines.

Table IV. DSIF equipment, deep space stations

Block diagram ref. no.	Description
1	Diplexer reference channel, 960 mc/s listen, 890 mc/s transmit, 200-w capability
2	10-kw transmitter used at 200 w, 890 mc/s; includes multiplier chains and phase modulator
3	Voltage-tuned oscillator for 890.046 mc/s
4	Transmitter acquisition panel
5	GSDS tracking receiver
6	GSDS wideband telemetry detection channel (3.5-5 kc)
7	GSDS voltage-tuned oscillator for reception at 960.05 mc/s
7a	Bias oscillator for reception at 960.15 mc/s
7b	Bias oscillator for reception at 960.25 mc/s
8	GSDS receiver acquisition panel
9	Two-way doppler capability used for increased accuracy of measurement
10	Precision doppler multiplying equipment (Goldstone and South Africa)
13	Antenna angle encoders
14	Analog recording, Sanborn recorder (8 channel), Midwestern recorder, 603 (36 channel)
16	Analog recording, 621 Midwestern recorder (14 channel)

Table IV. (Cont'd)

Block diagram ref. no.	Description
17	Telemetering discriminators for local recording and display of telemetry data
	a. Channel selectors
	b. Loop filters
18	Telemetering decommutator for spacecraft engineering data (Goldstone and South Africa)
19	Three-digit printout for decommutated telemetry data (Goldstone and South Africa)
20	Magnetic tape recorder (FR 600)
21	Telemetering test tape used for testing of discriminator and/or decommutation system
22	Test telemetering and transponder remote control from operations building.
23	Test transmitter for 960.25 mc/s checkout
24	Test transponder 890/960 mc/s used for systems test of DSIF installations
25	Test telemetering encoder
26	Test telemetering and transponder control at collimation tower site
29	890/960 tracking feed
30	Data handling system used to transmit angle tracking and doppler data to JPL and time generator
31	85-ft antenna, Az-El

Table IV. (Cont'd)

Block diagram ref. no.	Description
32	85-ft antenna, Ha-Dec
33	Parametric amplifier 960 mc/s
34	Maser amplifier 960 mc/s (Goldstone only)
35	Coordinate converter used to couple the two Goldstone tracking sites for angle tracking
37	Video monitor (Goldstone only)
38	Read, write, and verify spacecraft command unit (Goldstone and South Africa)
39	RWV command unit test antenna (Goldstone and South Africa)
41	960 mc/s right hand, circular polarized listening feed
42	Collimation antenna

Table V. DSIF equipment, mobile tracking station

Block diagram ref. no.	Description
1	Diplexer, reference channel 960 mc/s listen; 890 mc/s transmit; 25-w capability
2	25-w transmitter 890 mc/s; includes multiplier chains and phase modulator
3	Voltage-tuned oscillator for 890.046 mc/s
4	Transmitter acquisition panel
5	Tracking receiver
6	Wideband telemetry detection channel
7	Voltage-tuned oscillator for reception at 960.05 mc/s
9	Receiver acquisition panel
10	Two-way doppler capability used for increased accuracy of measurement
11	Precision doppler monitoring equipment
12	Antenna angle encoders
13	Telemetering discriminators for local recording and display of telemetering data
14	Telemetering decommutator for spacecraft engineering data
15	Three-digit printout for decommutated telemetry data
17	Analog recorder, Sanborn recorder (8 channel), Midwestern recorder (36 channel)
18	Data handling system used to transmit angle tracking and doppler data to JPL
19	Magnetic tape recorder

Table V. (Cont'd)

Block diagram ref. no.	Description
20	Telemetering test tape used for testing of discriminator and decommutator system
21	Test transponder control and monitor at MTS control trailer
23	Test transponder, 890/960 mc/s used for systems test of DSIF installation
24	Test telemetering encoder
25	Test transponder control and monitor at collimation tower site
26	Collimation antenna
27	960 mc/s tracking feed
28	10-ft Az-El antenna

5.0 SYSTEM PARAMETERS

5.1 Antenna Parameters

Antenna parameters for the DSIF stations are shown in Table VI.

5.2 Transmitter/Receiver Parameters

Transmitter and receiver parameters for the DSIF stations are shown in Table VII (receiver).

5.3 Recorded Parameters

The data recording system records the RF subsystem signal outputs.

In addition to the signals listed, three frequencies are counted and manually recorded. These are:

455-kc receiver reference oscillator

30-mc receiver reference oscillator

29-2/3-mc/s transmitter reference VCO

Table VI. DSIF antenna parameters

Station	Antenna type	Reflector size, ft	Tracking rate, deg/sec		Antenna gain, db		Antenna ellipticity, db		Excess noise temp, °K
			Elevation or hour angle	Azimuth or declination	Receiving	Transmitting	Receiving	Transmitting	
Goldstone	Az-El	85	2.0	2.0	44.5[a] ± 0.6A	41.7[b] ± 0.8A	1.4 ± 0.1A	3.0 ± 0.1	43[c] $^{+0}_{-15}$A
Goldstone	Ha-Dec	85	0.7	0.7	45.5[d] ± 0.5A	---	<1.0[c]	---	15 ± 5A
Woomera	Ha-Dec	85	0.7	0.7	44.5[a] ± 0.6A	---	1.4 ± 0.1A	---	43[c] $^{+0}_{-15}$A
Johannesburg	Ha-Dec	85	0.7	0.7	44.5[a] ± 0.6A	41.7[b] ± 0.8A	1.4 ± 0.1	3.0 ± 0.1	43[c] $^{+0}_{-15}$A
Mobile station	Az-El	10	10	10	22.8[f] ± 0.5A	23.3[g] ± 0.5A	0.6 ± 0.2A	2.7 ± 0.5A	100[c] ± 50A

NOTE: Capital letter indicates where quantity was measured or estimated. Refer to station configuration.

a. Gain for matched polarization includes bridge loss.

b. Sum channel of tracking antenna used for transmitter feed. Gain shown is for matched polarization-right-hand circular. Does not include ellipticity but includes bridge loss.

c. Antenna temperature is for 960-mc tracking feed except for GS cassegrain. 0° sky temperature is assumed.

d. Circularly polarized cassegrain listening feed. Gain figures are estimated and are for matched polarization.

e. Estimated.

f. Gain includes sum channel bridge loss and is for linear isotropic source. Tolerance includes possible variations due to ellipticity and measurement errors. Matched polarization will increase gain figure by 3 db.

g. Sum channel of tracking antenna used for transmitter feed. Gain includes sum channel bridge loss and is for linear isotropic source.

Table VII. DSIF receiver parameters

Item	Goldstone Az-El	Goldstone Ha-Dec	Woomera	Johannesburg	Mobile tracking station
Nominal frequency, mc/s[a]	960.05 ±0.03	960.05 ±0.03	960.05 ±0.03	960.05 ±0.03	960.05 ±0.03
Receiver noise figure, db, $F = Te/T + 1$	1.8[b] ±0.2	0.5[b] ±0.2	1.8[b] ±0.2	1.8[b] ±0.2	6.3[c] ±0.5B
Receiver transmission line loss, db	0.3[d] ±0.2AB	0.1 ±0.05AB	0.3 ±0.2AB	0.3 ±0.2AB	0.80[d] ±0.2ABCD
Receiver diplexer, db	0.4 ±0.2BCD			0.4[e] ±0.2BCD	
Loop noise bandwidth at threshold, cps	20 ± 4 (60 ±10)	20 ± 4 (60 ±10)	20 ± 4 (60 ±10)	20 ± 4 (60 ±10)	20 ± 4 (60 ±10)
Threshold, dbm, 20 cps $2BW_{L_0}$	-162 ±1.5	-162 ±1.5	-162 ±1.5	-162 ±1.5	-155 ±1.5
Maximum input signal level, dbm	-65	-65	-65	-65	-45
Residual phase modulation crystal oscillator phase jitter contribution	less than 3°[f] p/p	less than 3°[f] p/p	less than 3°[f] p/p	less than 3°[f] p/p	less than 3°[f] p/p

NOTE: Capital letters indicate where quantity was measured or estimated. Refer to station configurations.

a. 960.05 mc/s is basic two-way received frequency. 960.15 mc/s and 960.25 mc/s are one-way capsule listening frequencies.

b. 220 ±30°K is the estimated system noise temperature for the parametric receiver system. 75° ±10°K is the measured system noise temperature for the MASER system.

c. Measured at 30 mc. The Mobile Station figure was measured with noise injected at the diplexer.

d. Consists of 0.30 db from hybrid bridge to diplexer; 0.3 db for diplexer; 0.1 db from diplexer to front end. 0.1 db is included for mismatch losses.

e. Estimated. (For RA 4 and 5 only).

f. For input signal level of -60 dbm with 150 cps noise bandwidth.

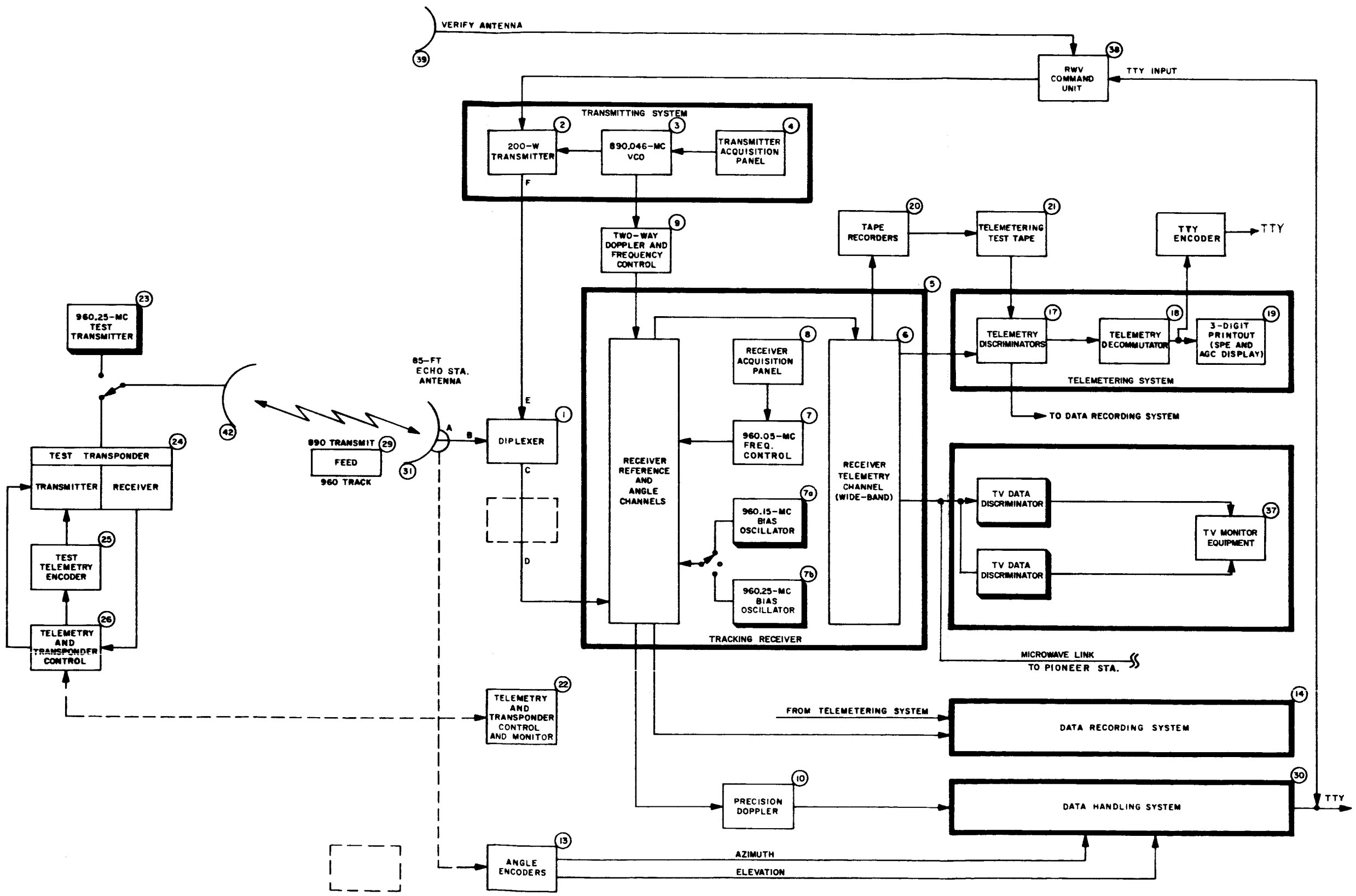

Figure 1. Ranger 3, 4, & 5 Goldstone Echo Site (DSIF 3) Configuration

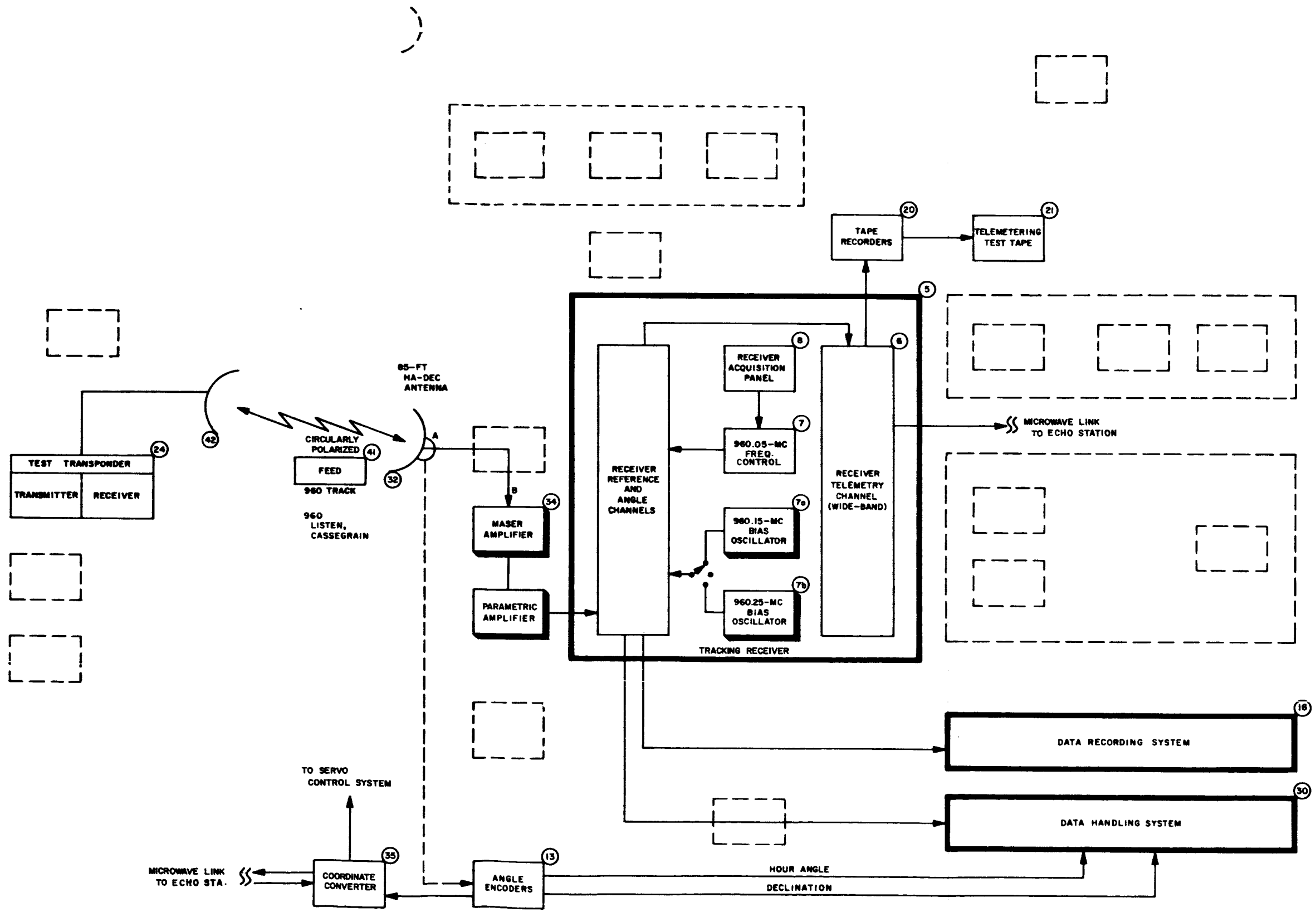

Figure 2. Ranger 3, 4, & 5 Goldstone Pioneer Station (DSIF 2 Configuration

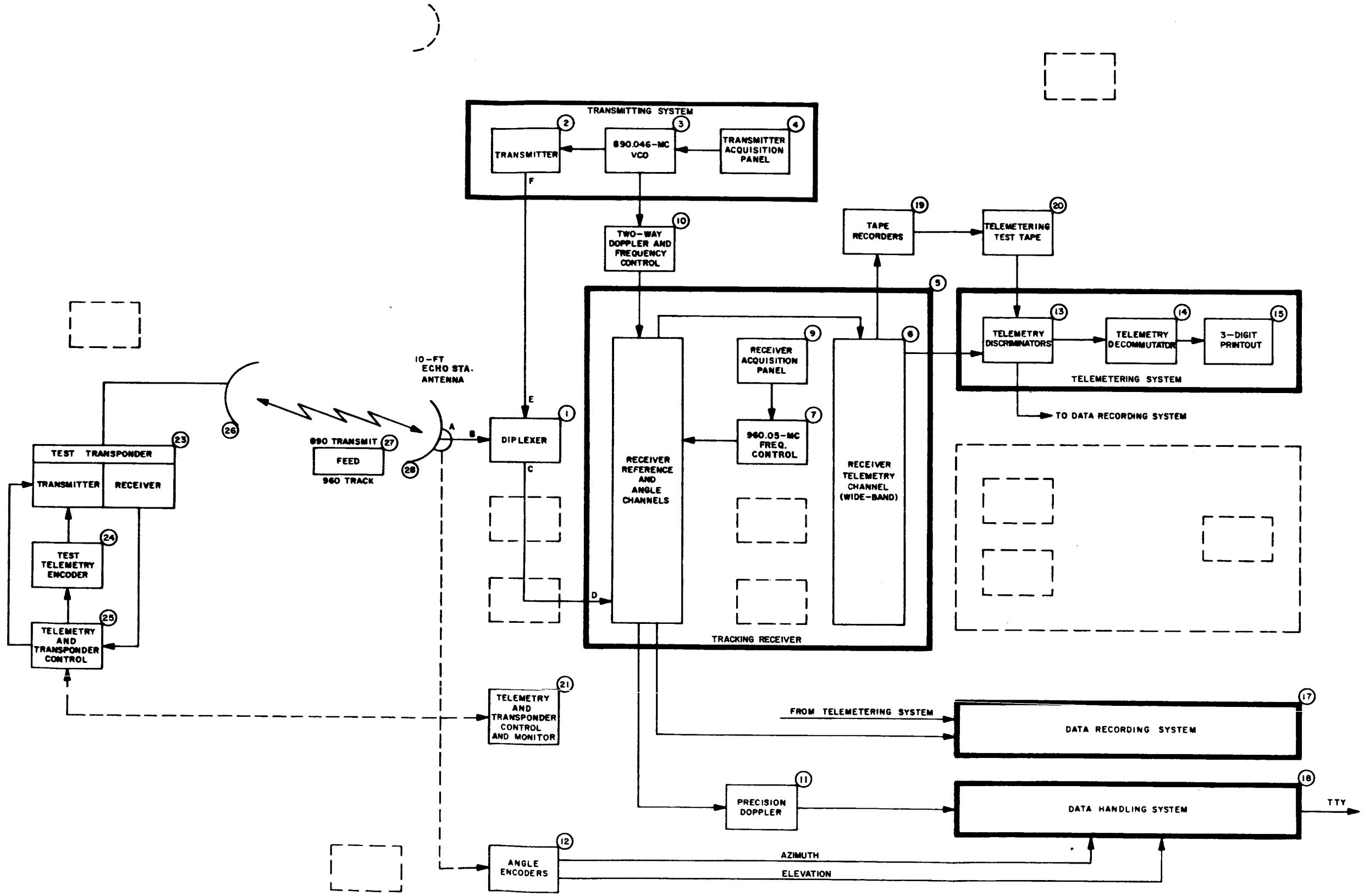

Figure 3. Ranger 3, 4, & 5 Mobile Tracking Station (DSIF 1) Configuration

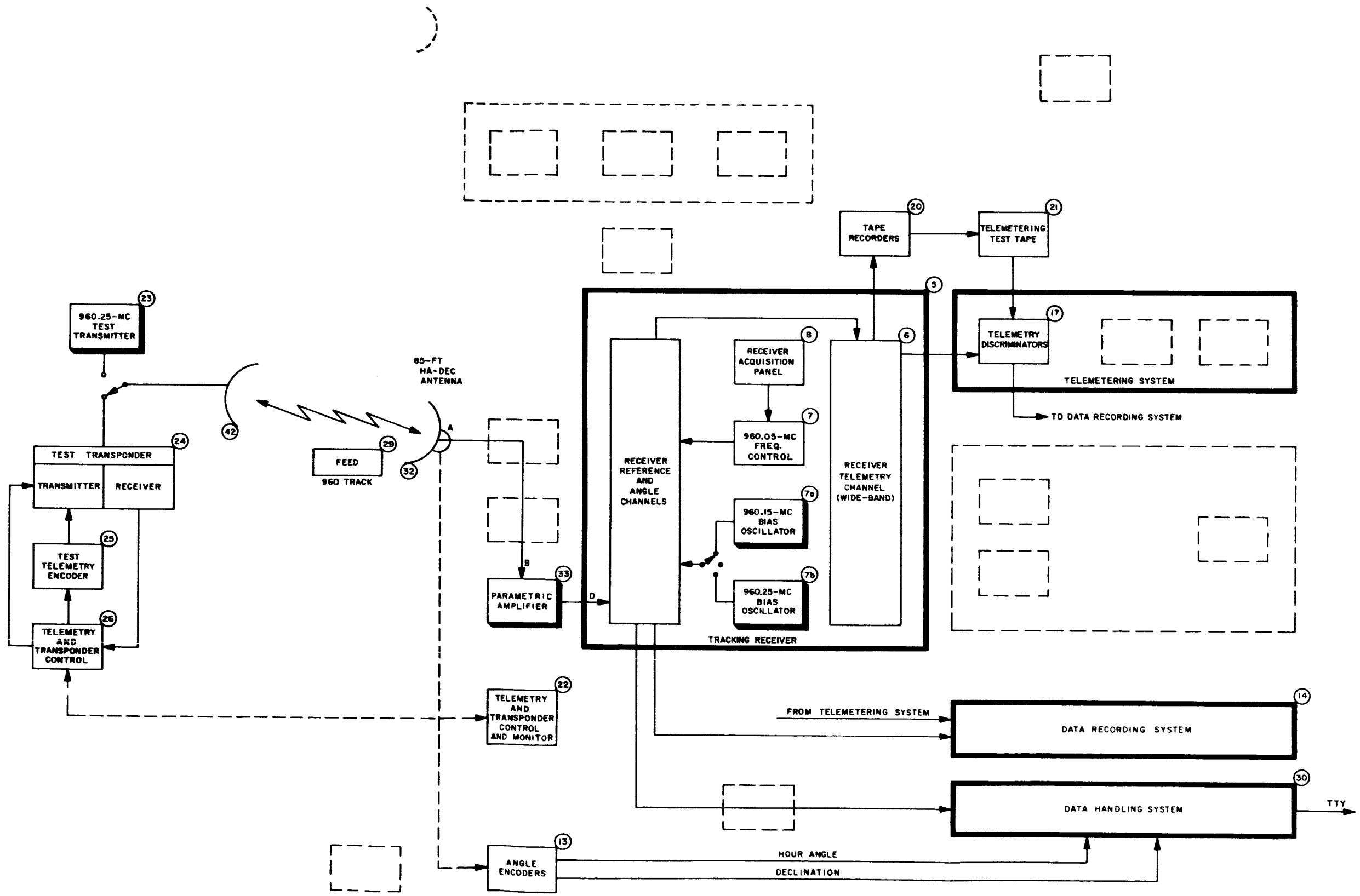

Figure 4. Ranger 3, 4, & 5 Woomera Tracking Station (DSIF 4) Configuration

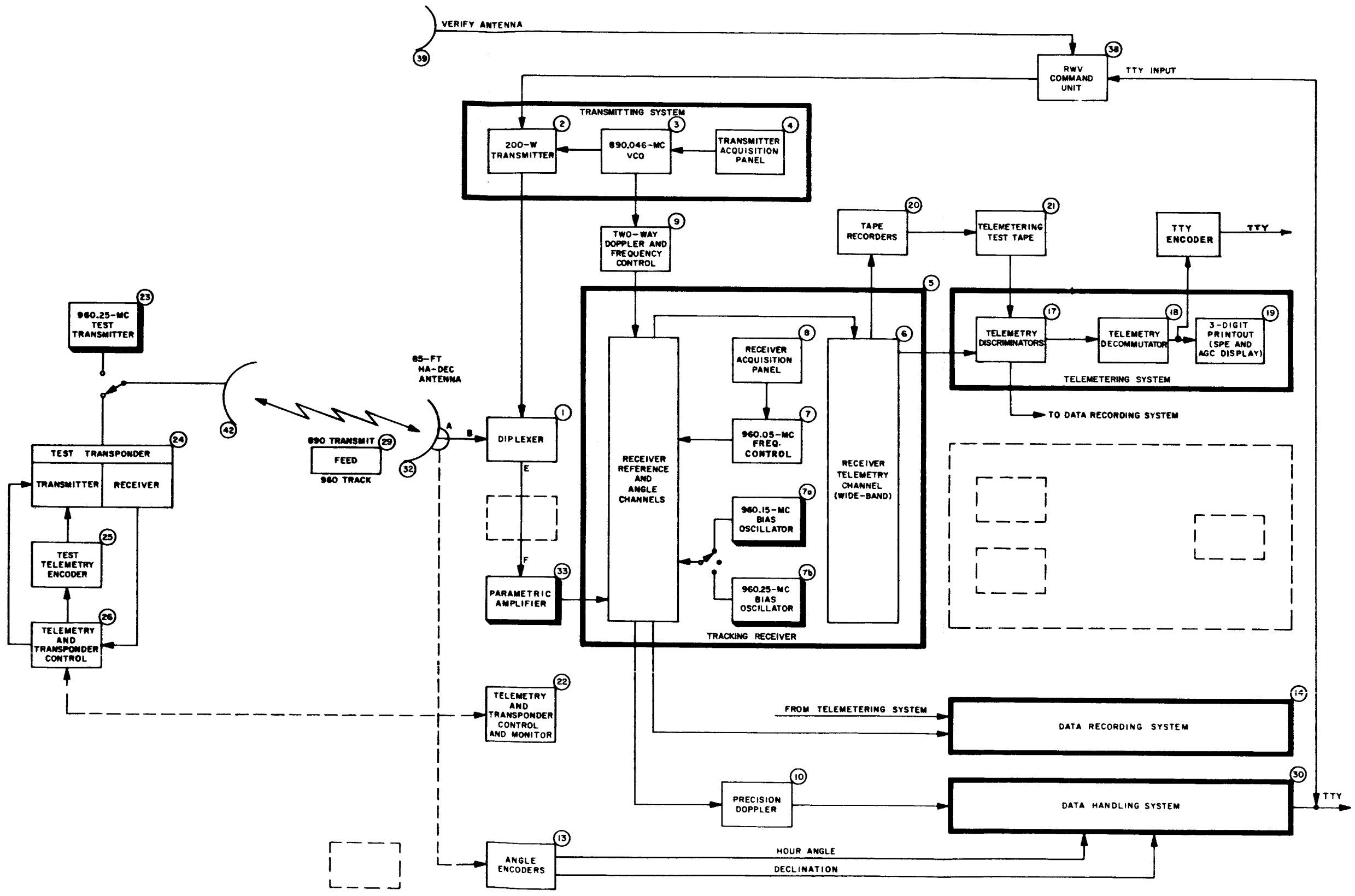

Figure 5. Ranger 4 & 5 South Africa Tracking Station (DSIF 5) Configuration

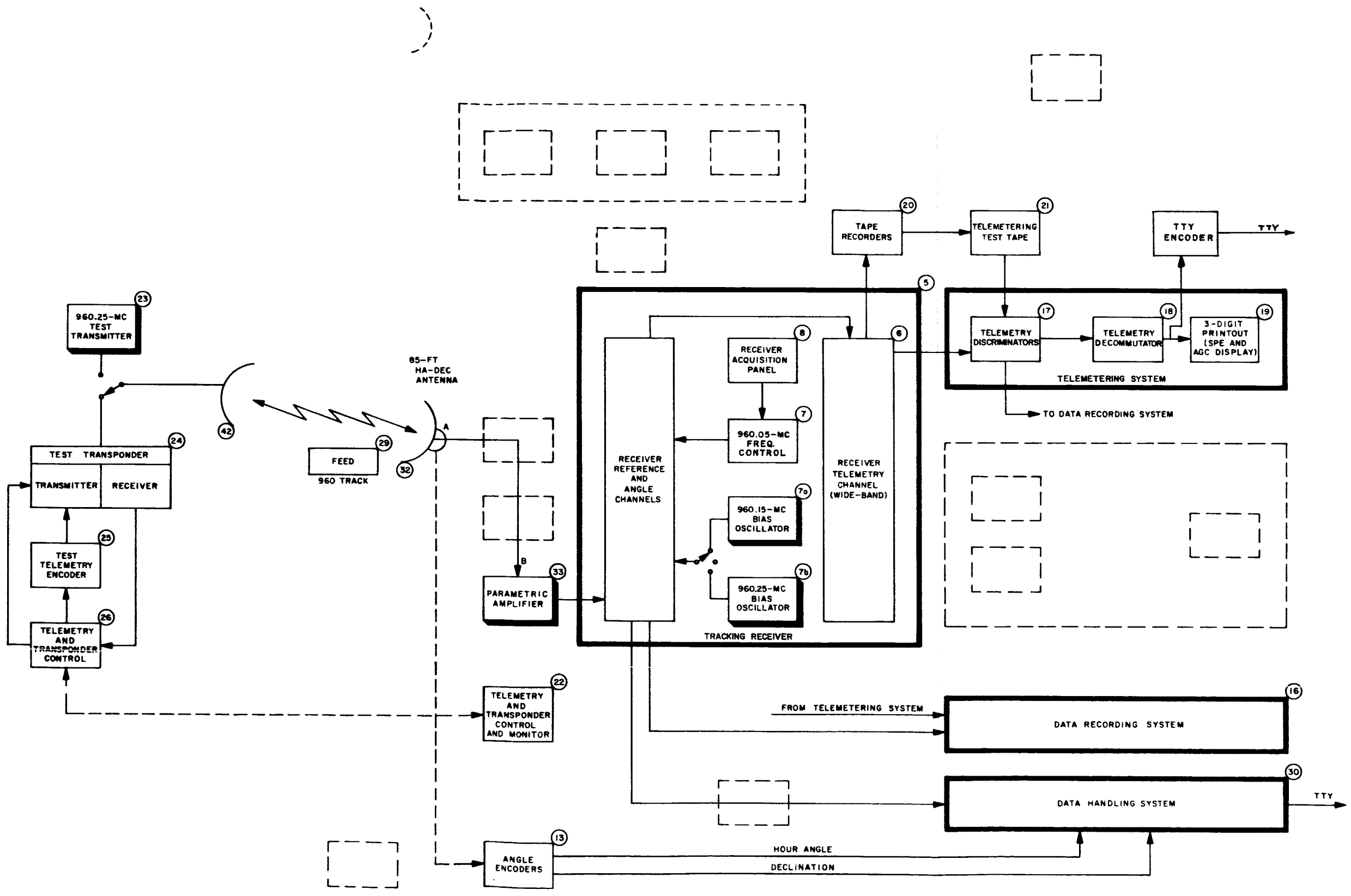

Figure 6. Ranger 3. South Africa Tracking Station (DSIF 5) Configuration

(Insert in Spacecraft Design Specification Book)

APPROVED:

System: M. R. Bernardi

Subsystem: [illegible]

Subsystem: [illegible]

JET PROPULSION LABORATORY

Spec. No. RA345-4-333
20 November 1961

RANGER A3, A4, & A5
GROUND INSTRUMENTATION SUBSYSTEM
DSIF

1.0 SCOPE

1.1 This specification covers the functional requirements for the Ground Instrumentation subsystems of the DSIF as required for the Ranger RA-3, 4, 5 Telecommunication System.

1.2 Description

The following major subsystems are included:

a. Tracking data handling equipment.
   1) Doppler readout
   2) Station time generation
   3) Antenna pointing angle readout

b. Telemetry and instrumentation recording equipment.
   1) Signal conditioning equipment
   2) Magnetic tape recorders
   3) Oscillographic recorders
   4) Data demodulation equipment
   5) Time code generation

The specification does not include the requirements for radio modulation, transmission, and demodulation functions; this specification does not include the requirements for modulation, transmission, and demodulation associated with the interstation communications subsystem.

2.0 APPLICABLE DOCUMENTS

2.1 The following documents form a part of this specification:

SPECIFICATIONS

Jet Propulsion Laboratory

RA345-4-430	Ground Telemetry Subsystem
8666	Functional Specification, DSIF - GSDS Data Handling System
	Ranger A3, A4, and A5 Spacecraft Design Specification Book

Collins Radio Company

525-0333-000	Telemetering Instrumentation Data Recording System Functions

2.2 OTHER PUBLICATIONS

Jet Propulsion Laboratory

TM 33-25	Technical Memorandum - - Description and Evaluation of Angular Encoding Systems Utilized by the Goldstone Tracking Antennas
TM 33-26	DSIF Volumes I and II
SFOP	Space Flight Operations Plan RA345
TIM	Tracking Information Memorandum for Ranger 3

3.0 SYSTEM DESCRIPTION

3.1 Data Handling System

3.1.1 Function

The data handling system provides and records a digital representation of the tracking antenna angular position; generates and records time; measures and records doppler frequency shift; records data condition; and parameter data. The data is recorded on punched paper tape in the standard Baudot teletype code. A system block diagram is shown in Figure 1.

3.1.2 System Capability

3.1.2.1 Recording Functions

Table I lists the functions recorded by the data handling system at each DSIF station. Table II lists the functions recorded at the Mobile Tracking Station.

3.1.2.2 Data Sample Rates

Table IV lists the data sample rates for the DSIF and Mobile Tracking Stations. Data sample rates that will be used for RA-3, 4, 5 are listed in the Space Flight Operations Plan for RA-3, 4, 5.

3.1.2.3 Doppler Counting Intervals

The doppler counting intervals available at the DSIF Stations are 1, 5, 10, 20, 30, 40, 50, and 60 seconds or continuous count (RA 4 and 5 only). The data sample rate must be equal to or greater than the doppler counting interval or the doppler counting will control the data sample rate, except during the continuous count mode where the count is sampled at the selected sample rate and a cumulative count is obtained. The doppler counting intervals to be used for Ranger RA-3, 4, 5 are listed in the Space Flight Operations Plan for RA-3, 4, 5. The doppler counting interval for the Mobile Tracking Station is controlled by the data sample rate.

3.1.2.4 Data Format

The data format for Ranger RA-3, 4, 5 is shown in Figure 2.

3.1.3 System Operation - DSIF Stations

3.1.3.1 Time Generation

A block diagram of the time generation system is given in Figure 3. Timing information is derived from a secondary frequency standard that has a frequency stability of 5 parts in 10^{10} per day. A time readout in days, hours, minutes and seconds is provided.

3.1.3.2 Angle Encoding System

A block diagram of the angle encoding system is shown in Figure 4. A complete description of the angle encoding system is found in JPL Technical Memorandum 33-25.

3.1.3.3 Doppler Measuring System

The doppler measuring system and data sample rate control are shown in Figure 5. The various modes of operation are described in JPL Specification 8666. For Ranger RA-3, two counters will operate during alternate sample periods to provide a continuous count of the doppler frequency. The two counters will not be reset

at the completion of their counting periods and the counter readout will represent the total number of cycles occurring during the periods when that counter has been counting. The sum of the counter readings will represent the total number of cycles occurring after the counters are started. Each counter will recycle when its total count exceeds 10^7.

3.1.3.4 Doppler Bias and One Way Doppler Reference

In the two-way doppler tracking mode, a 3,333 cps reference signal is supplied to the tracking receiver system to bias the measured doppler frequency and prevent it from going through 0 cps.

For the one-way doppler tracking mode a 31 megacycle reference and a 5,000 cps reference are provided to the tracking receiver system for doppler frequency extraction. All of these frequencies are derived from the secondary frequency standard.

3.1.3.5 Data Condition

Data condition information is derived from appropriate contact closures in the receiver, servo and data systems.

3.1.3.6 Data Readout

All data inputs are sampled sequentially and converted to Baudot teletype code for punching a five-level teletype tape.

3.1.4 System Description - Mobile Tracking Station

3.1.4.1 Time Generation

The time generation equipment is essentially the same as Figure 3.

3.1.4.2 Angle Encoding System

The angle encoding system is essentially the same as Figure 4 except the code wheels are geared directly to the antenna through a 45:1 gear ratio.

3.1.4.3 Doppler Measuring System

The doppler measuring system shown in Figure 6 consists of an 8 digit counter and an 8 digit storage register. The total cycle count is measured continuously and at the sample time, the counter reading is transferred to a storage register for readout. The resulting readout is the total cycle count occurring between the start time and the sample time. The counter recycles when the total count exceeds 10^8.

A 30 times multiplier is used to increase the doppler resolution by a factor of 30.

3.1.4.4 Doppler Bias and One Way Doppler Reference

Same as 3.1.3.4.

3.1.4.5 Data Condition

Same as 3.1.3.5.

3.1.4.6 Data Readout

Same as 3.1.3.6.

3.2 Instrumentation System

3.2.1 Function

The instrumentation system records station performance data and received telemetry data on magnetic tape recorders and oscillographic recorders. It also demodulates data to the data conversion equipment for real time tab printout or to the data encoding equipment for punching teletype tapes. A block diagram of the system is shown in Figure 7.

3.2.2 System Capability

3.2.2.1 Magnetic Tape Recorders

Table V lists the functions recorded on the magnetic tape recorders. These recorders will operate at a speed of 3-3/4 inches per second and have a frequency response of 100 cps to 6.25 kcps at the 3 db points.

3.2.2.2 Oscillographic Recorders

Tables VI, VII, VIII and IX list the functions that will be recorded on the oscillograph recorders at each station. The Midwestern Oscillographs will operate at a speed of 0.15 inches per second and have a frequency response from 0 cps to 90 cps flat. The Sanborn Oscillograph will operate at a speed of 0.25 millimeters per second and have a frequency response from 0 cps to 60 cps at the 3 db point.

3.2.3 System Description

A detailed system description of the basic recording equipment is given in Technical Memorandum 33-26.

3.2.3.1 Signal Conditioning Equipment

The signal conditioning equipment is used to convert the input signals into a form where they can be recorded on the various recorders. This equipment consists of filters, DC amplifiers and voltage-controlled oscillators.

3.2.3.2 Magnetic Tape Recorders

Two seven-channel Ampex Model FR 107 or CEC Model 752 are available at each site. These recorders are operated with their inputs in parallel so that two identical magnetic tapes are produced. The magnetic tape recordings serve as the permanent record of all data taken at each station.

3.2.3.3 Oscillographic Recorders

Three different types of oscillographic recorders are used at the various stations. Table X indicates the types available at each site. These recorders are all of the direct writing type and provide the stations with a quick look data capability.

3.2.3.4 Phase Lock Loop Discriminators

The phase lock loop discriminators are used to demodulate the received telemetry information. The number of discriminators available at each station and the telemetry channels that will be demodulated is shown in Figure 11. The requirements for selection of the bandpass filters and the loop bandwidth filters for the various telemetry channels is given in Ranger RA-3, 4, and 5 Ground Telemetry Subsystem Specification RA345-4-330.

3.2.3.5 Engineering Telemetry Decommutator Tab Printout and Teletype Converter

An engineering telemetry decommutator, tabular printout and a teletype converter (DSIF-3 and 5 only) will be available at the Goldstone Az-El Site (DSIF-3), South Africa (DSIF-5) and the Mobile Station (DSIF-1). This equipment will take demodulated data as derived from telemetry channels (Channels 2, 3, 4, 5 and 6) along with frequency information (Channel 1) and synchronizing information (Channel B-19), and produce a tabular printout and a punched TTY paper tape of selected flight engineering data. This equipment is described in detail in the Ranger A-3, 4, 5 Ground Telemetry Subsystem Specification RA345-4-330.

3.2.3.6 TV - Video Discriminator

A wide band discriminator will be available at the Goldstone Az-El Site for demodulating the TV channel to obtain the video information. This unit is described in Ranger A-3, 4, 5 Ground Telemetry Subsystem Specification RA345-4-330.

3.2.3.7 Time Generation

Serial coded time signals are generated to time-label all records, at a rate of 1 readout per second, 1 readout per minute, and 1 readout per hour.

4.0 SYSTEM INTERFACES

4.1 Data Handling System

4.1.1 Angle Encoding System to Antenna Interface

The interface between the angle encoding system and the antenna is a mechanical interface at the antenna axis.

4.1.2 Doppler Measuring System to RF System Interface

The interface between the doppler measuring system and the RF system occurs at the doppler measuring system input and the outputs to the doppler bias loop. The following are the required signal input characteristics and the output signal characteristics.

Doppler Signal Input (Goldstone and Mobile Station)	±0.25 V into 600 ohms
Doppler Signal Input (Woomer and S.A.)	±0.25 V into 4 K ohms
31 MC Reference Output	1 Volt into 50 ohms load
5 KC and 3.33 KC Outputs	1 Volt into 50 ohms load

4.2 Instrumentation System

4.2.1 Instrumentation System to RF System Interface

The interfaces between the instrumentation system and the RF system are listed in Table 12.

4.2.2 Instrumentation System to Engineering Telemetry Decommutator (Goldstone AZ-El, South Africa and Mobile Station Only)

The interfaces between the instrumentation system and the engineering decommutator are listed in Table 13.

4.2.3 Instrumentation System to Command System Interface

The following interface exists between the instrumentation system and the command system.

	Function	Minimum Input Voltage	Input Impedance
1.	Command Record Line	0 to +5 Volts	10 K ohms

4.2.4 Instrumentation to Video System Interface

The following interface exists between the instrumentation system and the TV video recording system.

	Function	Minimum Output Voltage	Output Impedance
1.	Video Discriminator Output Channel V	0 to 10 V Adjustable	< 400Ω
2.	IRIG Channel 1 Discriminator VCO Output	IVRMS	< 1 KΩ

Table I

Data Handling System Functions

DSIF Stations

Function	Min. Value	Max. Value	Resolution	Accuracy
1. Greenwich Mean Time	000:00:00:00 (days, hrs., min., sec.)	365:23:59:59 (days, hrs., min., sec.)	1 Sec.	±10 M/sec. Ref. to WWV
2. Hour Angle or Azimuth Angle	000.000°	359.998°	.002°	±.0055° RMS
3. Declination Angle or Elevation Angle	000.000°	359.988°	.002°	±0055° RMS
4. Doppler (Two-way)[a]	0 Cycles	10^7 Cycles	±1 Cycle or ±.156 M/sec	±0.176 *M/sec.
5. Doppler (One-way)[a]	0 Cycles	10^7 Cycles	±1 Cycle or ±.323 M/sec	±0.47 *M/sec.
6. Doppler (One-way)[b]	0 Cycles	10^7 Cycles[d]	±1 Cycle or ±9.69 M/sec	±9.84 *M/sec.
7. Parameter Data[c]	0	9		
8. Data Condition	See Table 3			

Maximum and minimum values are the capabilities of the Data Handling Subsystem and do not necessarily represent the expected values for Ranger 3, 4, and 5.

* Peak errors for a single measurement due to the measuring system only, using a one second counting interval.

(a) Goldstone and South Africa

(b) Woomera

(c) Consists of 10 individually operated manual switches each having the range indicated and capable of being grouped in any combination.

(d) 10^{10} cycles for RA 4 and 5.

Table II

Data Handling System Functions
Mobile Tracking Station

Function	Min. Value	Max. Value	Resolution	Accuracy
1. Greenwich Mean Time	000:00:00:00	365:23:59:59	1 sec.	±10 M/sec. Ref. to WWV
2. Azimuth Angle	000.000°	359.996°	.004°	±0.01° RMS
3. Elevation Angle	000.000°	359.996°	.004°	±0.01° RMS
4. Doppler (Two-way)	0 Cycles	10^8 Cycles	±1 Cycle cr ±0.156 M/sec.	±0.176 *M/sec.
5. Doppler (One-way)	0 Cycles	10^8 Cycles	±1 Cycle or ±0.323 M/sec.	±0.47 *M/sec.
6. Data Condition	See Table 3			

Maximum and minimum values are the capabilities of the Data Handling Subsystem and do not necessarily represent the expected values for Ranger 3, 4, and 5.

* Peak errors for a single measurement due to the measuring system only, using a one second counting interval.

Table III

Data Condition Code

Digit No. 1[a]		Digit No. 2				Digit No. 3			
Doppler Averaging Time			Manual Switch	Acquisition Condition	Antenna Mode		Counter Recorded	One Way Two Way	Doppler
Digit	Time								
0	1 sec.	0	0	0	0	0	0	0	0
1	5 sec.	1	0	0	1	1	0	0	1
2	10 sec.	2	0	1	0	2	0	1	0
3	20 sec.	3	0	1	1	3	not used		
4	30 sec.	4	1	0	0	4[c]	1	0	0
5	40 sec.	5	1	0	1	5[c]	1	0	1
6	50 sec.	6	1	1	0	6[c]	1	1	0
7	60 sec.	7	1	1	1	7[c]	not used		
8[b]	Continuous								

	Light On 0 State	Light Off 1 State
Manual Switch	Good Data	Bad Data
Acquisition Condition	In RF Lock	Out of RF Lock
Antenna Mode	Auto Track	Not Auto Track
Counter Recorded	No. 1	No. 2

	One Way - Two Way Doppler	
Two Way	0	0
One Way	0	1
Pseudo Two Way	1	0

Notes:

a. Not used in MTS
b. Ranger 4 and 5 only.
c. Not used in the MTS for RA 3, 4, and 5 or in the DSIF for RA 4 and 5.

Table IV

Data Sample Rates
DSIF and Mobile Stations

Intervals [a]	Increments [b]
1 sec. to 9 sec.	1 sec.
10 sec. to 90 sec.	10 sec.
1 min. to 9 min.	1 min.
10 min. to 90 min.	10 min.

a. Available between data samples.

b. Increment by which the interval can be adjusted.

Table V

Magnetic Tape Recording

Recorded Information	Signal Range
Ground Instrumentation Mixer #1 Signals	
A. IRIG Channel 5 Static Phase Error	±3 Volts
B. IRIG Channel 6 Receiver Signal Strength	-90 to -153 dbm
C. IRIG Channel 7 RF Amplitude Modulation	±3 db
D. IRIG Channel 8 Dynamic Phase Error	±90°
Ground Instrumentation Mixer #2 Signals (Goldstone Only)	
A. IRIG Channel 4 Azimuth Angle Error (Digital)	±0.15°
B. IRIG Channel 5 Elevation Angle Error (Digital)	±0.15°
C. IRIG Channel 6 Azimuth Angle Error (RF)	±0.1°
D. IRIG Channel 7 Elevation Angle Error (RF)	±0.1°
Raw Composite Telemetry Data Signal	300 cps to 5 Kcps
Time and Reference Mixer	
A. 100 pps NASA Time Code on 1000 cps carrier	1000 cps
B. 2 pps NASA Time Code on 100 cps carrier	100 cps
C. Mixed Wow and Flutter Tones	6.25 KC
Raw Composite Telemetry Data Signal	300 cps to 5 KC
Voice - Station Command Line and Voice Label	
Tracking Filter and Time Mixer	
A. Filtered Composite Telemetry Data Signals	

Table VI

Midwestern 621 Oscillograph Channel Assignment

Signal	Signal Range
Static Phase Error	± 3 Volts
Dynamic Phase Error	± 90 Degrees
Receiver Signal Strength	-90 to -153 dbm
RF Amplitude Modulation	± 3 db
RF Acquisition Relay Actuation	0 or +6 Volts
RF Acquisition Switch Position	0 or +6 Volts
Antenna Mode Switch Position	0 to +28 Volts (stairstep)
IRIG Channel 2 disc. (Engineering Tele.)	(1)
Declination Angle Error	± 0.1 Degree
IRIG Channel 3 disc. (Engineering Tele.)	(1)
Hour Angle Error	± 0.1 Degree
IRIG Channel 4 disc. (Engineering Tele.)	(1)
Static Reference Time	—
2 pps NASA Time Code	—

RA 3 Woomera and South Africa

RA 4 & 5 Woomera Only

Table VII

Midwestern 603 Oscillograph Channel Assignment

Signal	Signal Range
Static Reference Trace	
2 pps NASA Time Code	
Receiver Acquisition Relay	0 or +6 V
Receiver Acquisition Switch Position	0 or +6 V
Antenna Mode Switch	0 to 28 V (stairstep)
Spare (1) Transmitter Reverse Power	
Spare	
(1) IRIG Channel 1 Disc. (400 cps ref.)	
Static Phase Error	±3 V
Spare (1) Transmitter Drive Power	
RF Azimuth Error	±0.1°
Spare	
RF Elevation Error	±0.1°
Spare	
Static Reference	
Spare	
Receiver Signal Strength	-90 to -153 dbm
Spare	
Spare	
RF Amplitude Modulation	±3 db
Spare	
Spare	
Spare	
Dynamic Phase Error	±90°
Spare	
Spare	
Spare	
(3) IRIG Channel 1 Disc. out (400 cps ref.)	
(3) IRIG Channel 2 Disc. out (Eng. Tele.)	
(3) IRIG Channel 3 Disc. out (Eng. Tele.)	
Spare (2) Digital Azimuth Error	±0.16
Spare (1) Transmitter Forward Power	
Spare (2) Digital Elevation Error	±0.16
Spare (1) Commands	0 to 4 V
100 pps NASA Time Code	
Static Reference Trace	

(1) Goldstone and South Africa (RA 4 & 5) only
(2) Goldstone only
(3) MTS only

See table VI for South Africa RA 3 Recording

Table VIII

Goldstone - Sanborn Oscillograph Channel Assignment

Channel No.	Signal
1	IRIG Channel 2 Discriminator Output (Eng. Tele.)
2	" " 3 " " (Eng. Tele.)
3	" " 4 " " (Eng. Tele.)
4	" " 5 " " (Eng. Tele.)
5	" " 6 " " (Eng. Tele.)
6	Chan. B-20 " " (Command Chan.)
7	Chan. B-2 " " (Events)
8	IRIG Chan. 8 " " (Gamma Ray)

Table IX

Mobile Tracking Station - Sanborn Oscillograph Channel Assignment

Channel No.	Signal
1	IRIG Channel 2 Disc. Output (Engineering Data)
2	" " 3 " " (Engineering Data)
3	" " 4 " " (Engineering Tele.)
4	Blank
5	IRIG Channel 6 " " (Engineering Tele.)
6	Chan. B-20 " " (Command Channel)
7	Chan. B-2 " " (Events)
8	Blank

Table X

Oscillograph Records

Station	Midwestern 603 36 Channel or Equivalant	Midwestern 621 14 Channel	Sanborn 8 Channel
Goldstone Ha-Dec Site	X(1)	X(2)	X
Goldstone AZ-E1 Site	X	—	X
Woomera	—	X	—
South Africa	X(1)	X(2)	—
Mobile Station	X	—	X

(1) RA-4 and 5 only
(2) RA-3 only

Table XI

Discriminators

Station	Number of Discriminators Operating	Channel Assignments
Goldstone HA-Dec Site	6	No. Assignment-Backup to AZ-EL Site
Goldstone AZ-EL Site	10	All Channels except Chan. V
	*1	Chan. V
Woomera	4	2, 8, B-2, B-20
South Africa	10	All Channels
Mobile Station	8	IRIG 1, 2, 3, 4, 6, plus B-2, B-19 and B-20

*DCS Wide Band Video Disc.

Table XII

Instrumentation System - RF System Interface Characteristics

Function	Minimum Input Volt. Required	Input Impedance	Remarks
Telemetry Tones	±0.1 V	>10 K	Double Ended Input
Dynamic Error	±0.1 V	>10 K	(Balanced)
Static Phase Error	±2.5 V	>10 K	"
Signal Strength AGC	±2.5 V	>10 K	"
Spin Modulation	±0.1 V	>10 K	"
Hour Angle Error (RF)	±2.5 V	>10 K	"
Dec Angle Error (RF)	±2.5 V	>10 K	"
Acquisition Contacts	0 or 1 V	>10 K	Single Ended
Servo Mode Switch	0 or 1 V	>10 K	"
Receiver Mode Switch	0 or 1 V	>10 K	"
Forward Power*	±10 M V	>10 K	Double Ended
Back Power*	±10 M V	>10 K	"
Driver Power*	±10 M V	>10 K	"
Hour Angle Error (Dig)	±0.16 V	>10 K	Single Ended
Dec Angle Error (Dig)	±0.16	>10 K	"

*Goldstone only

Table XIII

Instrumentation System to Engineering Decommutator Interface Characteristics

	Function	Minimum Output Level	Output Impedance	Source
1.	Chan. 1 400 Cycle Ref.	1 V RMS	1 K	Chan. 1 Discriminator VCO Output
2.	Chan 2 Commutated Engineering Data	1 V RMS	1 K ohms	Chan. 2 Discriminator VCO Output
3.	Chan. 3 Commutated Engineering Data	1 V RMS	1 K ohms	Chan. 3 Discriminator VCO Output
4.	Chan. 4 Commutated Engineering Data	1 V RMS	1 K ohms	Chan. 4 Discriminator VCO Output
5.	Chan. 5 Commutated Engineering Data	1 V RMS	1 K ohms	Chan. 5 Discriminator VCO Output
6.	Chan. 6 Commutated Engineering Data	1 V RMS	1 K ohms	Chan. 6 Discriminator VCO Output
7.	Decommutator Sync.	* Variable up to ±60 V with 10 K load	100 ohms	Chan. B-19 Discriminator Analog Output
8.	No Lock Indication	Ground for No Lock	Contact Closure	Chan. 1, 2, 3, 4, 5, 6 and B-19 No Lock Relay
9.	Timing Information	0 V for True -12 for False	500 ohms	Time Code Gen.

* Full Band Deviation

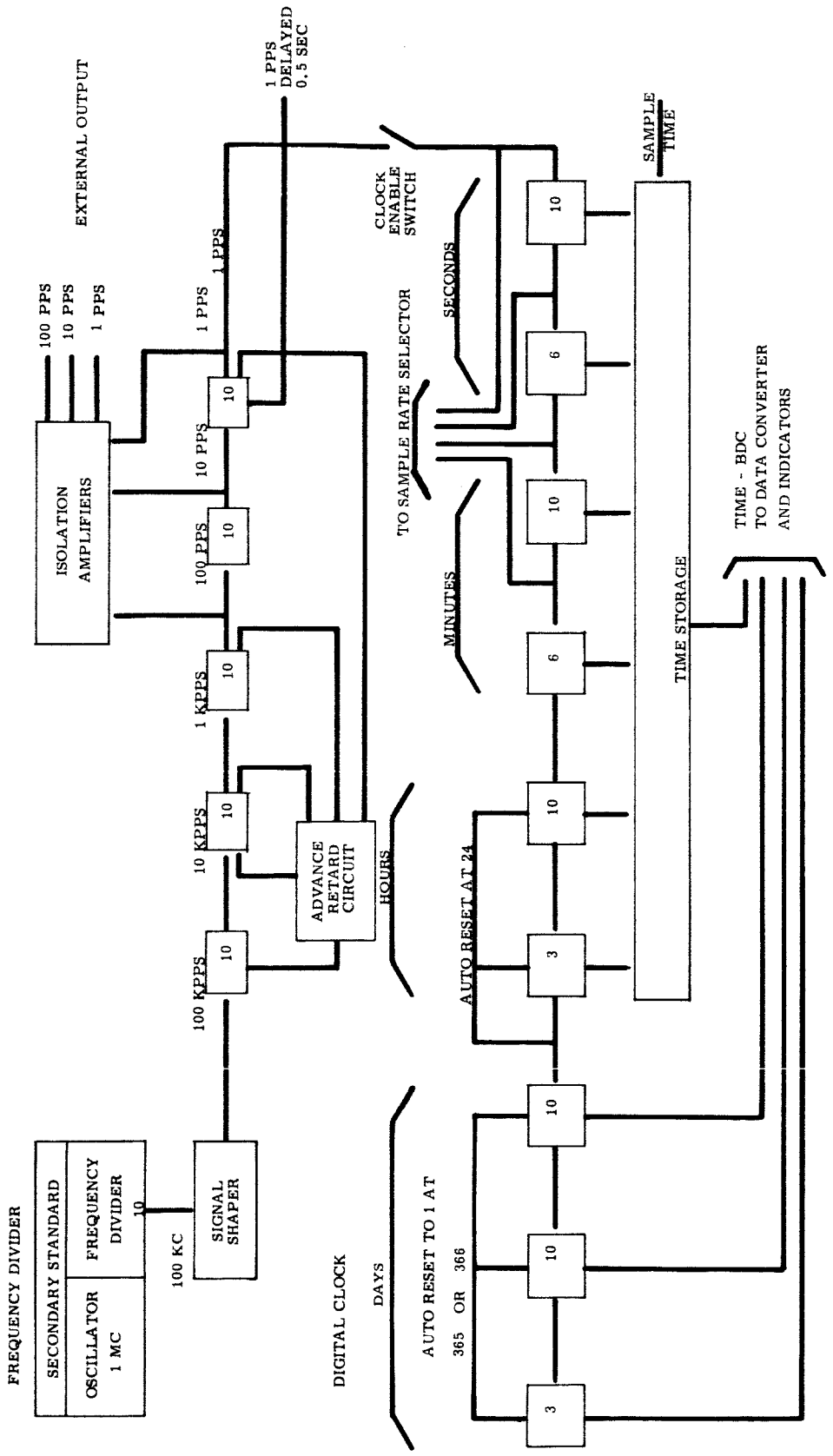

Figure 1. Block Diagram - Data Handling System - DSIF Stations

CR = Carriage Return
LF = Line Feed
F = Figures
S = Face

Tape Format - Mobile Station

CR	
LF	
F	
1	Station ID
S	
F	
1	Data
2	Condition
S	
F	
1	
2	
3	Time
4	
5	
6	
S	
F	
1	
2	
3	Azimuth
4	Angle
5	
6	
S	
F	
1	
2	
3	Elevation
4	Angle
5	
6	
S	
F	
1	
2	
3	
4	Doppler
5	
6	
7	
8	
S	
F	
1	Day
2	of
3	Year

(1) Expanded to 10 digits for RA 4 and 5.

Tape Format - DSIF Stations

CR	
LF	
F	
1	Station ID
S	
F	
1	Data
2	Condition
3	
S	
F	
1	
2	
3	Time
4	
5	
6	
S	
F	
1	
2	Hour
3	Angle or
4	Azimuth
5	Angle
6	
S	
F	
1	
2	Dec
3	Angle or
4	Elevation
5	Angle
6	
S	
F	
1	
2	
3	
4	Doppler (1)
5	
6	
7	
S	
F	
1	Day
2	of
3	Year

Figure 2. Data Format

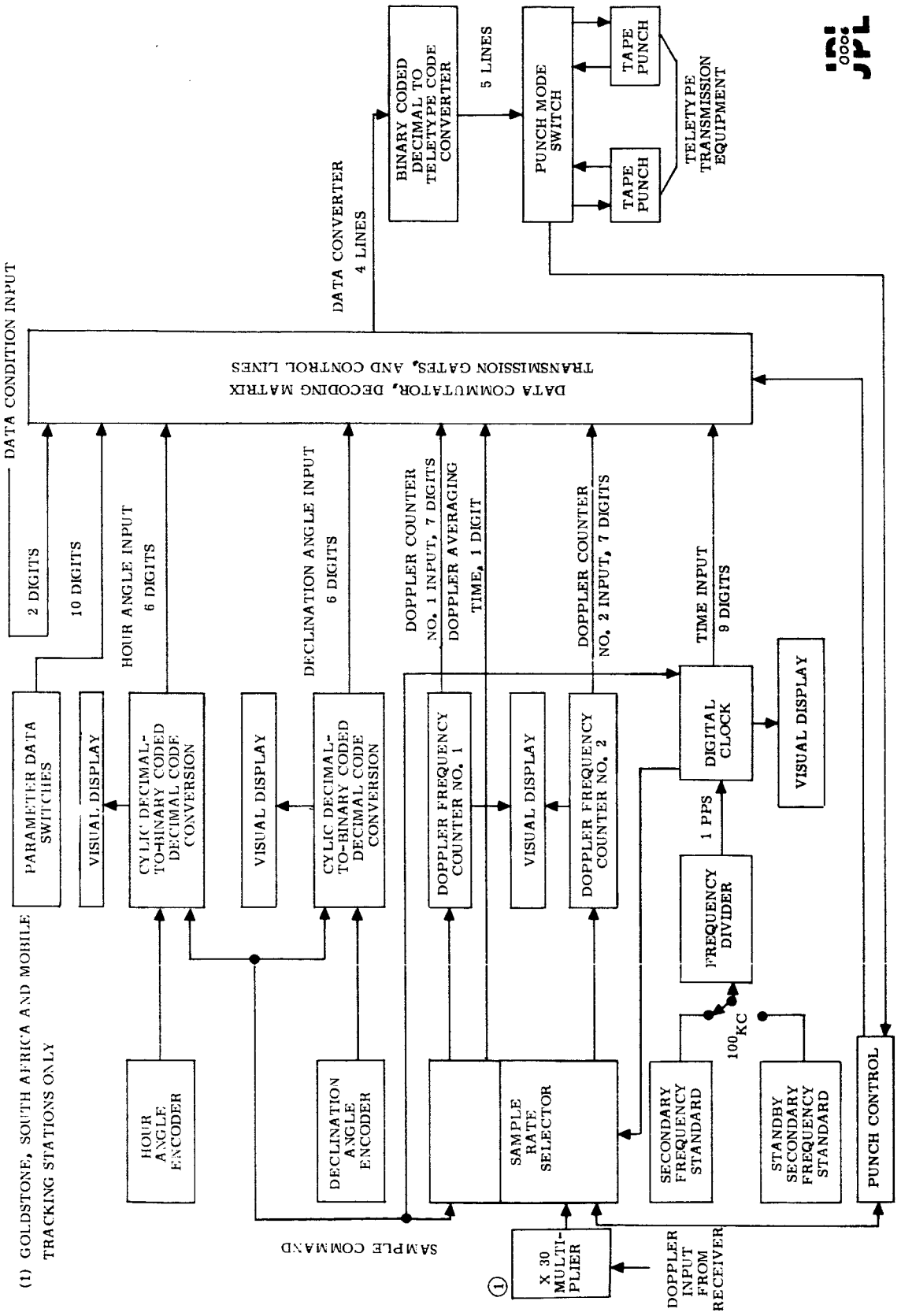

Figure 3. Block Diagram - Digital Clock - DSIF Stations

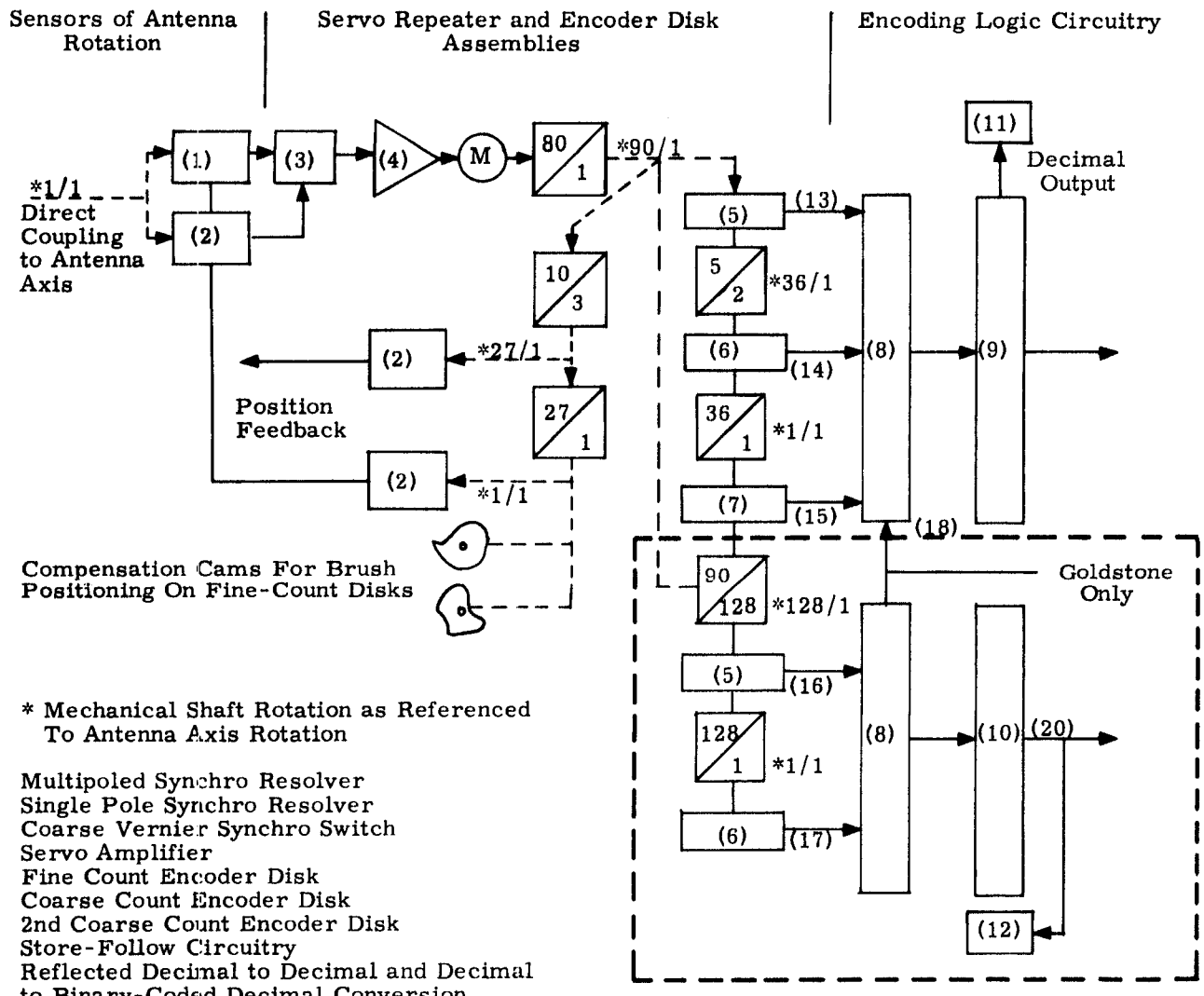

* Mechanical Shaft Rotation as Referenced To Antenna Axis Rotation

(1) Multipoled Synchro Resolver
(2) Single Pole Synchro Resolver
(3) Coarse Vernier Synchro Switch
(4) Servo Amplifier
(5) Fine Count Encoder Disk
(6) Coarse Count Encoder Disk
(7) 2nd Coarse Count Encoder Disk
(8) Store-Follow Circuitry
(9) Reflected Decimal to Decimal and Decimal to Binary-Coded Decimal Conversion
(10) Reflected Binary to Binary Conversion
(11) Visual Display
(12) Lamp Bank Display
(13) 000 to 998 in Increments of 2, Four Patterns
(14) 0 to 9 in Increments of 1, One Pattern
(15) 0 to 35 in Increments of 1, One Pattern
(16) 000 to 2047 Increments of 1, (2 Count)
(17) 000 to 128 in Increments of 1, (2 Count)
(18) Follow Command (Interrogation Signal)
(19) Binary Coded Decimal in 0002 Degree Increments to Data Handling
(20) Binary Output in 1/262,144 Counts to Coordinate Converter

Figure 4. Block Diagram - Angular Encoding System - DSIF Stations

RA345-4-333

(1) GOLDSTONE ONLY

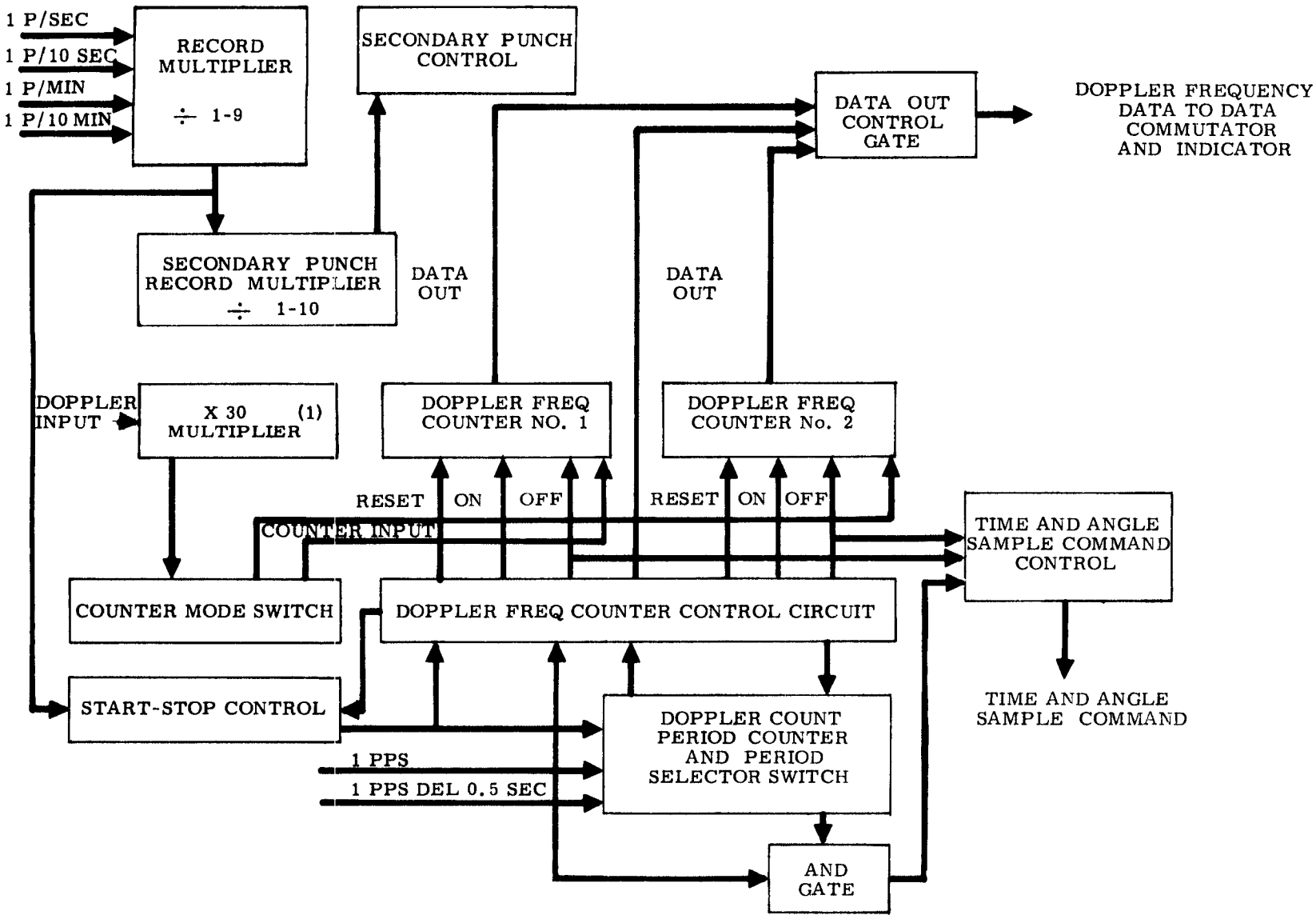

Figure 5. Block Diagram - Sample Rate Selector - DSIF Stations

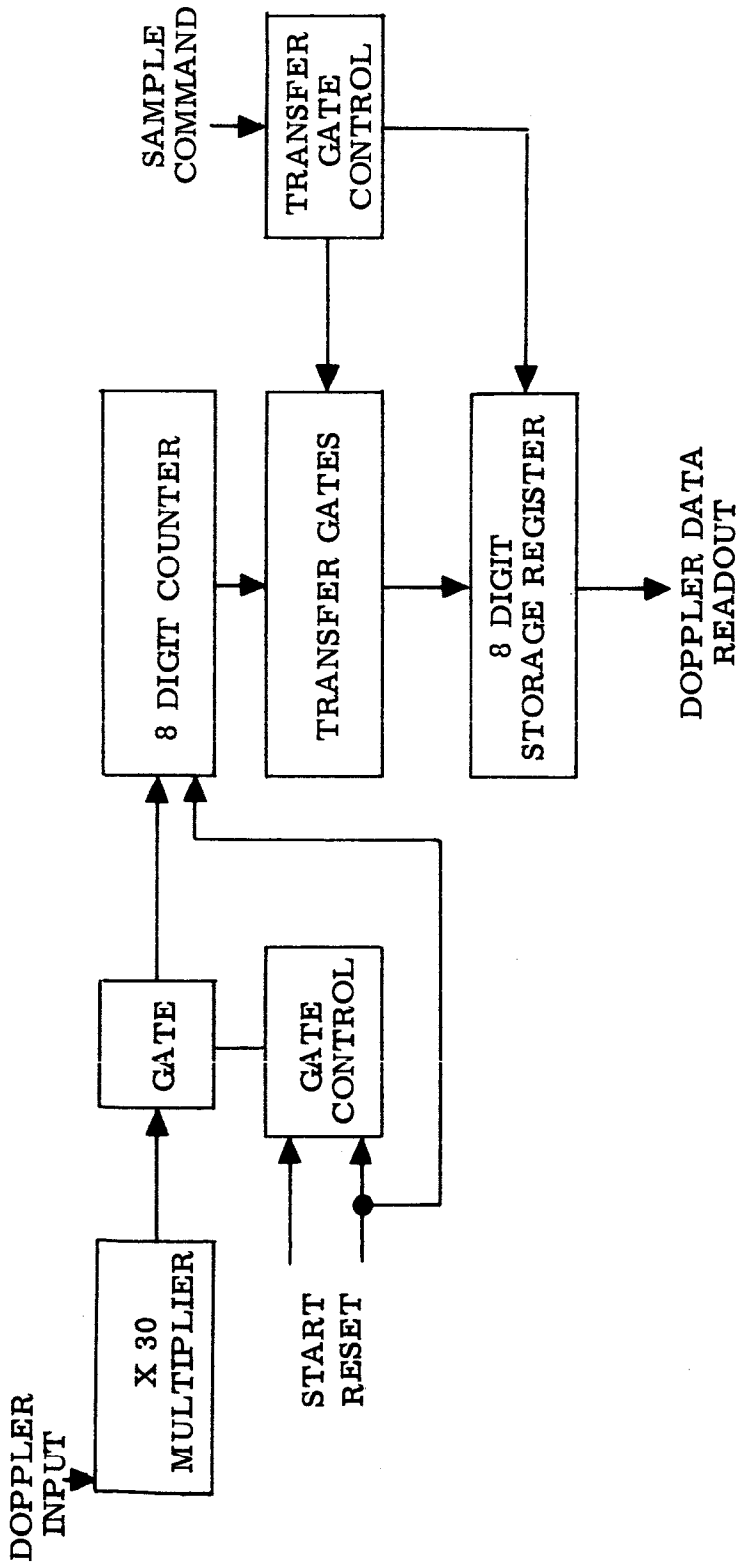

Figure 6. Doppler Measuring System - Mobile Tracking Station

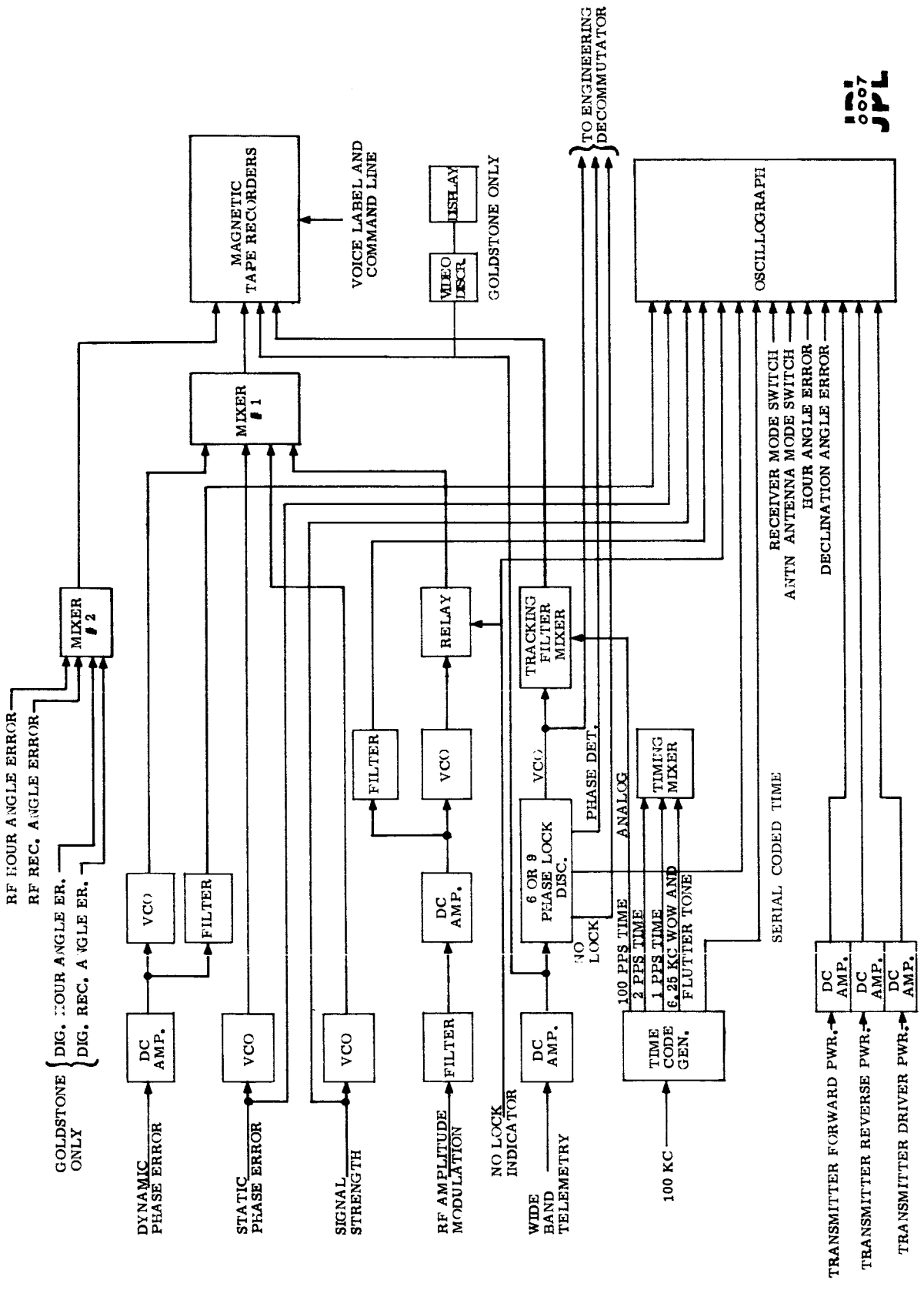

Figure 7. Block Diagram - Instrumentation System

(Insert in Spacecraft Design Specification Book)

APPROVED:
System: M. R. Mesnard
Subsystem: [illegible]
Subsystem: Richard K. Stoller

JET PROPULSION LABORATORY

Spec. No. RA 345-4-335
1 January 1962

FUNCTIONAL SPECIFICATION
SPACECRAFT RANGER A 3, 4, 5
DSIF OPERATIONS

1.0 SCOPE

1.1 This specification covers the operational requirements and constraints of the DSIF which are applicable to the Ranger A 3, 4, 5 spacecraft.

2.0 APPLICABLE DOCUMENTS

2.1 The following documents form a part of this specification:

SPECIFICATIONS

Jet Propulsion Laboratory

Spacecraft Design Specification Book, Ranger A 3, 4, 5

DOCUMENTS

Jet Propulsion Laboratory

TM No. 33-26 — Deep Space Net System Specification (Two Volumes)

3.0 REQUIREMENTS

The DSIF network will be utilized for Ranger 3, 4, and 5 to obtain the following data:

a. Angle Tracking (HA-Dec and Az-El)

b. One-way Doppler

c. Two-way Doppler

d. Midcourse Maneuver Commands

e. Spacecraft Attitude Control Commands

f. Scientific Telemetry Recording

g. Engineering Telemetry Commands

h. Scientific Capsule Data Recording

The DSIF net consists of four 85-foot tracking antennas. Two are located at Goldstone, California (DSIF-2, DSIF-3); one at Woomera, Australia (DSIF-4); and one at Johannesburg, Republic of South Africa (DSIF-5). A Mobile Station (DSIF-1) consisting of a 10-foot tracking antenna will also be located near Johannesburg, Republic of South Africa. The Mobile Tracking Station will provide immediate post injection tracking and will be used to obtain initial precision two-way doppler data and provide updated acquisition information for the large 85-foot antenna. The 85-foot antennas are located around the earth such that there is a capability of providing 24-hour coverage for limited periods of time. The following chart indicates the equipment capability of the DSIF for the Ranger A3, A4, and A5 flights:

Station	Receiving	Transmitting	Command	Two-Way Doppler
DSIF 1	X	X		X
DSIF 2	X			X**
DSIF 3	X	X	X	X
DSIF 4	X			
DSIF 5	X	X*	X*	X*

* Transmitting two-way doppler and command capability is guaranteed for Ranger A-4 and later missions.

** Precision pseudo-two-way doppler only (0.35 meters/second accuracy)

3.1 Essential Information

The three documents described below will contain information essential to the successful accomplishment of the Ranger A3, A4, and A5 spacecraft missions.

3.1.1 Space Flight Operations Plan

The Space Flight Operations Plan (SFOP), which is written for each experiment under the cognizance of JPL, will contain all of the information necessary to integrate the operation of the spacecraft from vehicle launch until the accomplishment of the mission. It is to be primarily predicated upon the nominal case, but it will consider anticipated departures from the nominal. It will have the following sections:

a. Introduction

b. Missions and Flight Objectives

c. Standard Sequence of Events

d. Anticipated Non-Standard Sequence of Events

e. Tables

f. Figures

The SFOP will cover the entire operational requirements including the DSIF operations in detail. It is to be released in final form at least six months prior to the mission.

3.1.2 Tracking Information Memorandum

The Tracking Information Memorandum (TIM) will contain detailed information pertaining to the operation of the DSIF tracking network. The following information is contained in the document.

a. Mission Description

b. DSIF Station Equipment and Data Required

c. Acquisition and Tracking Procedures

d. Modes of Operation

e. Data Handling and Recording

f. Communications

g. Schedules

h. Recording Assignments

3.1.3 Tracking Operations Memorandum

The Tracking Operations Memorandum (TOM) will contain information as to the events which will have occurred during the prelaunch countdown and during the first week of the post launch period. This information will include nonstandard conditions, tracking station equipment malfunctions or deterioration, results of prelaunch system tests, and deviations from information in the TIM. This report will be released within 30 days after firing, and followed by weekly reports.

3.2 Operating Schedules for Ranger A3, A4, and A5

The operating schedule for the Ranger A3, A4, and A5 flight is based on providing comprehensive coverage during the critical flight times and partial coverage during the routine portion of the experiment.

3.2.1 Critical Flight Time Operation

Operation of stations within the network during the critical period will be as follows:

a. For the first 72 hours the DSIF will provide 24-hour coverage.

b. Midcourse maneuver and terminal maneuvers will be covered by DSIF 2 and 3.

3.2.2 Routine Operation (After First 72 Hours)

a. If RA-3 is successful the DSIF will provide a 24-hour per day coverage for a maximum period of 90 days.

b If RA-3 is successful the DSIF will provide 10 - 15-hour per day coverage for RA-4 for a maximum period of 90 days, providing there is no conflict with equipment installation required for future programs.

If RA-3 is unsuccessful the DSIF will provide 24-hour per day coverage for RA-4 for a maximum period of 90 days.

c. DSIF tracking coverage of RA-5 will depend upon the success or failure of RA-3, RA-4, and Mariner R and its tracking requirements.

4.0 DSIF TRACKING CONSTRAINTS

4.1 Acquisition

Acquisition information must be provided to each DSIF tracking station prior to a tracking mission as indicated below:

a. HA-Dec 85-foot Antennas (DSIF 2, DSIF 4, DSIF 5)

Time	GMT, hours, minutes, seconds
Hour Angle	Decimal degrees to the nearest .01 degree
Declination Angle	Decimal degrees to the nearest .01 degree
Frequency	CPS to the nearest CPS

b. Az-El 85-foot Antenna (DSIF 3)

Time	GMT, hours, minutes, seconds
Azimuth Angle	Decimal degrees to the nearest .01 degree
Elevation Angle	Decimal degrees to the nearest 0.1 degree
Frequency	CPS to the nearest CPS

c. Mobile Tracking Station

Time	GMT, hours, minutes, seconds
Azimuth Angle	Decimal degrees to the nearest degree
Elevation Angle	Decimal degrees to the nearest degree
Frequency	CPS to the nearest CPS

4.2 Acquisition Data Sample Rate

For the initial view period after launch, acquistion data will be required at sample intervals of one minute during the first hour of the view period and 5-minute intervals during the remainder of the view period.

All view periods other than the initial one will require one sample per 5-minutes during each pass. Data will be up-dated each day and transmitted once per day. Transmission time per day of data is 15 minutes.

4.3 Installation of Equipment

Installation of a 10 kw transmitter at Johannesburg may require shutdown of the Johannesburg station for a short period of time.

4.4 Logistics and Shipping

The shipment of special equipment to the DSIF sites in order to accomplish any of the RANGER missions will require the following lead times:

a.	Air Freight	
	Johannesburg	13 days nominally
	Woomera	15 days nominally
	Goldstone	1 day (private plane)
b.	Sea Freight	
	Johannesburg	8 weeks nominally
	Woomera	5 weeks nominally
c.	Motor Transport	
	Goldstone	2 to 3 days nominally

(Insert in Spacecraft Design Specification Book)

APPROVED:
Systems: M. R. Meynard
Subsystems: R. G. Peterson

JET PROPULSION LABORATORY

Spec. No. RA345-4-380

21 October 1960

RA-3 FUNCTIONAL SPECIFICATION

COMMAND SYSTEM RA-3, 4, AND 5

1.0 SCOPE

1.1 This functional specification covers the command portion of the RA345 spacecrafts.

2.0 APPLICABLE DOCUMENTS

2.1 The following documents apply to this specification:

Jet Propulsion Laboratory

Spec. No. RA345-3-110	Design Characteristics
Spec. No. RA345-3-120	Design Restraints

3.0 DESCRIPTION

3.1 General

Those commands which cannot be adequately provided from a preset program within the Central Computer & Sequencer (CC&S) are transferred to the spacecraft while it is in flight as illustrated in Figure 1.

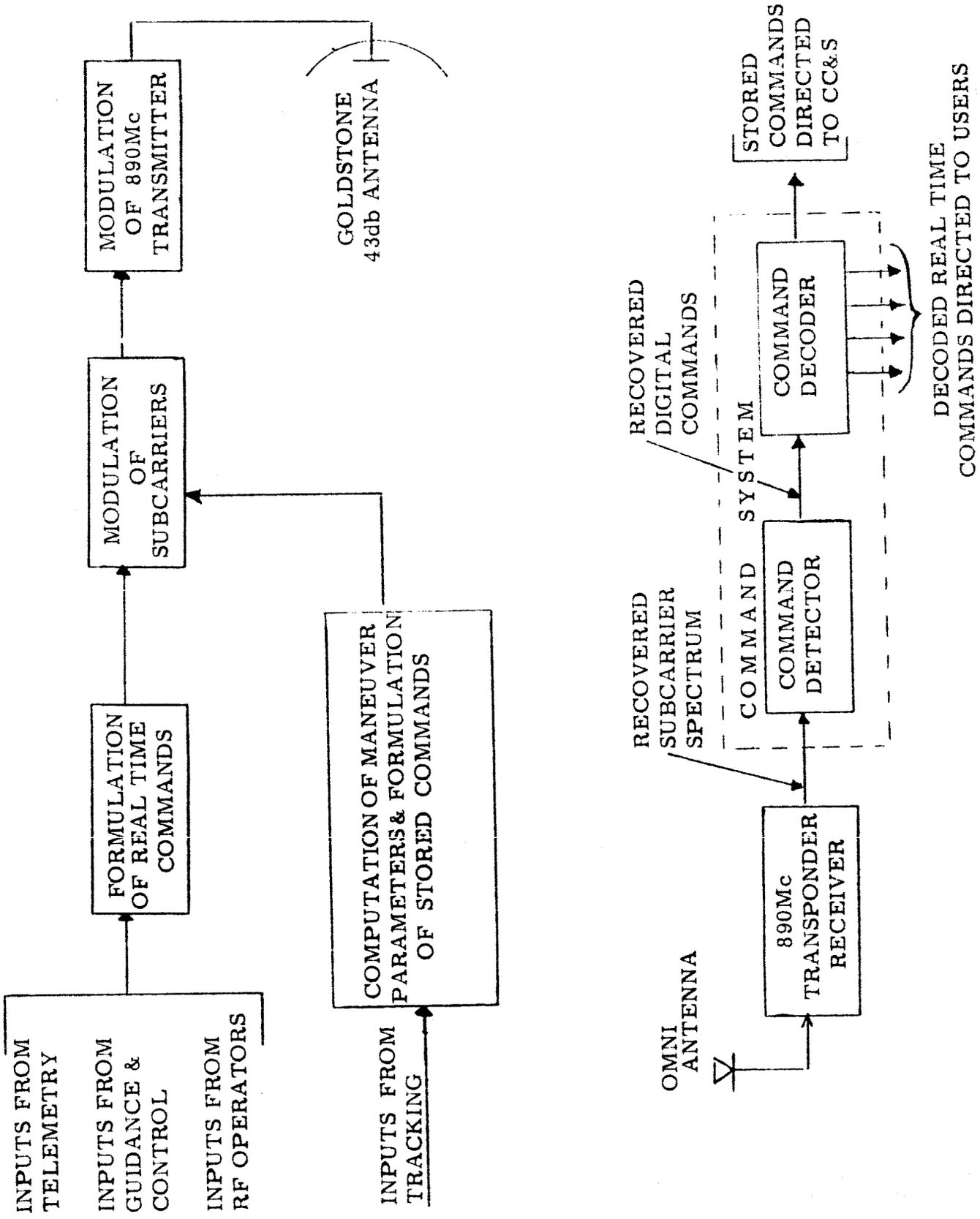
INPUTS FROM TELEMETRY
INPUTS FROM GUIDANCE & CONTROL
INPUTS FROM RF OPERATORS
FORMULATION OF REAL TIME COMMANDS
MODULATION OF SUBCARRIERS
MODULATION OF 890Mc TRANSMITTER
GOLDSTONE 43db ANTENNA
INPUTS FROM TRACKING
COMPUTATION OF MANEUVER PARAMETERS & FORMULATION OF STORED COMMANDS
OMNI ANTENNA
890Mc TRANSPONDER RECEIVER
RECOVERED SUBCARRIER SPECTRUM
COMMAND DETECTOR
COMMAND SYSTEM
RECOVERED DIGITAL COMMANDS
COMMAND DECODER
STORED COMMANDS DIRECTED TO CC&S
DECODED REAL TIME COMMANDS DIRECTED TO USERS

The commands are expressed in a serial digital word and are transferred to the spacecraft in the form of an 890-mc carrier which has been modulated by subcarrier signals which bear the digital command information. The subcarrier signals are recovered within the spacecraft transponder and are applied to the Command System. The Command System is comprised of two subsystems, the Command Detector and the Command Decoder. The individual digits of each serial binary command word are detected by the Command Detector, and these are applied to the Command Decoder. The Command Decoder decodes the address portion of the command word and routes the command information to the designated command user in the appropriate form.

3.2 Command Complement

The commands planned for RA-3 are listed in Table I. It is noted that the commands logically divide into the following two categories:

a) Real-time commands.
b) Stored commands.

Transmission of a real-time command causes momentary actuation of the relay in the Command Decoder which is designated by the command address. Transmission of a stored command results in the transfer of both the address and data portion of the command word to the CC&S in serial binary form.

3.3 Basic Interface

The command system input will be a pair of modulated subcarrier signals from the spacecraft 890/960-mc transponder. The signal ground will be common between these two systems. DC isolation will be maintained between the command system and all other spacecraft systems. The real-time command relays will be contained and controlled by the command system. Each real-time command user will have an isolated set of contacts on the assigned relay. The stored (quantitative) commands will be supplied to the CC&S in the form of serial binary coded words of fixed length. Two command system monitor signals will be applied to the Data Encoder and telemetered.

4.0 BASIC SYSTEM DESIGN

4.1 Word Format

A standard command word comprises 18 serial binary digits. The first digit, a binary one, acts as a framing bit. The next five digits are the command address block, and the final twelve digits, the data block, represent the magnitude and polarity of the stored commands. The command address completely identifies which command has been sent. Although the data block contains no information in the case of real-time commands, those digits are transmitted as binary zeros to maintain the standard command word format.

4.2 Modulation Scheme

The command system employs two synchronously related subcarriers which are phase-shift-key (PSK) modulated by the command word and bit sync information, respectively. Each command word will be expressed in non-return-to-zero serial binary form, and each word will be transmitted at a one bit-per-second rate. The bit sync information will take the form of a pseudo-noise digital sequence which is periodic at once each second. The bit sync signal will be transmitted continuously.

Table I

LIST OF RA-3 COMMANDS

Command Designation	Command Description	Resultant Action
RTC-1	Roll Override	150±50 ms relay closure
RTC-2	Antenna Hinge Angle Override	150±50 ms relay closure
RTC-3	Antenna Switchover	150±50 ms relay closure
RTC-4	Begin Midcourse Maneuver	150±50 ms relay closure
RTC-5	Telemetry Mode Change (Backup)	150±50 ms relay closure
RTC-6	Begin Terminal Maneuver & Turn on Vidicon Experiment	150±50 ms relay closure
RTC-7	Turn On Altimeter Power (Backup)	150±50 ms relay closure
SC-1	Midcourse Roll Maneuver Duration	19 digit word to CC&S
SC-2	Midcourse Pitch Maneuver Duration	19 digit word to CC&S
SC-3	Midcourse Velocity Increment	19 digit word to CC&S
SC-4	Terminal First Pitch Maneuver Duration	19 digit word to CC&S
SC-5	Terminal Yaw Maneuver Duration	19 digit word to CC&S
SC-6	Terminal Second Pitch Maneuver Duration	19 digit word to CC&S

4.3 Flight System Configuration

The command system comprises the following two subsystems:

a) The Command Detector
b) The Command Decoder

The Command Detector establishes bit sync and detects each digit of each command word. The binary digital output of the Command Detector is applied to the

input of the Command Decoder. This subsystem then decodes the command address, and proceeds to process the command in the appropriate manner. Stored commands are applied to the CC&S in serial binary form, and real-time commands are executed by momentarily actuating the designated relay within the Command Decoder.

5.0 COMMAND DETECTOR DESIGN

5.1 Input Signal Characteristics

The subcarrier signals which are processed by the command detector are generated as shown in Figure 2. The resultant subcarrier spectrum is presented in Figure 3. The amplitudes of the two subcarrier signals are adjusted to be approximately equal, and the amplitude of the sum is adjusted to obtain a 3.0 db supression of the 890-mc carrier. This results in a carrier phase deviation of approximately 0.8 radians rms.

5.2 Input Signal Interface

The subcarrier signals are coupled to the input of the Command Detector through a 2.5 μf capacitor from an emitter follower in the output of the 890-mc transponder receiver. The transponder receiver has a basic sensitivity of 1.4 volts per radian when the output is operating into a resistance greater than 2,000 ohms. At weak carrier signal strengths, the sensitivity decreases due to signal suppression in the receiver bandpass limiter. The suppression factor reaches a minimum value of 0.113 at the transponder receiver threshold. The Command System signal ground will be directly connected to the transponder signal ground.

5.3 Command Detector Configuration

A block diagram of the Command Detector is presented in Figure 4. Upon initial application of the subcarrier signals, the unit goes into an automatic search mode. In this mode, pulses are dropped in the spacecraft pseudo-noise generator until the spacecraft pseudo-noise sequence becomes correlated with the transmitted pseudo-noise sequence. Correlation is achieved within 8.5 minutes of the time the subcarrier signals are first applied. After correlation is established, the "dump" signal will go to zero and the subcarrier lock signal (transmitted over the telemetry link once every one hundred seconds) will show that the Command System is ready to receive a command transmission.

5.4 Matched Filter Bit Detector

A basic block diagram of the matched filter bit detector is presented in Figure 5. The output of the command subcarrier phase detector is applied to the input of an operational integrator. The output of the integrator is sampled and

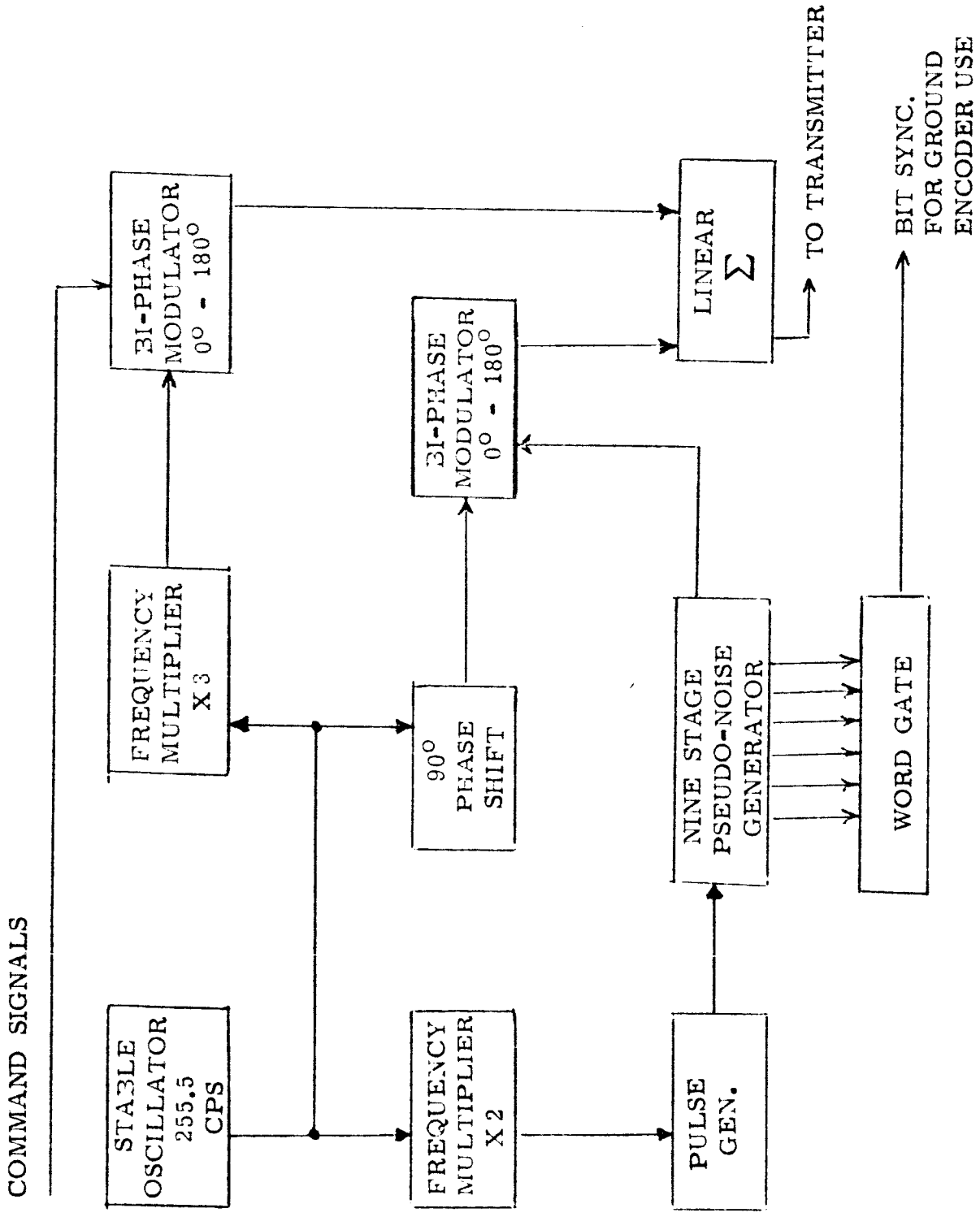

Figure 2. COMMAND SUBCARRIER SIGNAL GENERATION

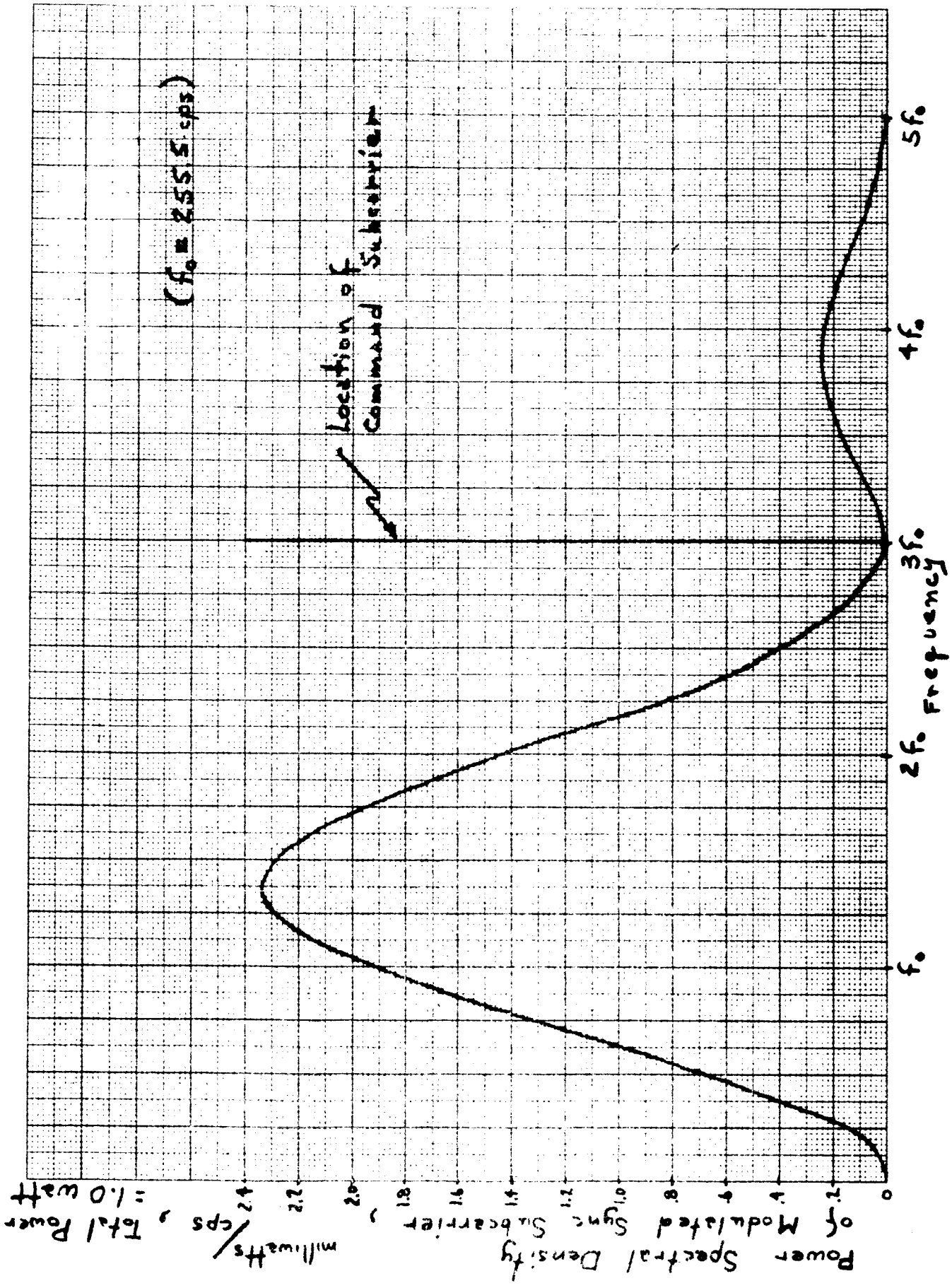
Power Spectral Density
of Modulated Sync Subcarrier, milliwatts/cps, Total Power = 1.0 watt
2.4
2.2
2.0
1.8
1.6
1.4
1.2
1.0
.8
.6
.4
.2
0
f_o
$2f_o$
$3f_o$
$4f_o$
$5f_o$
Frequency
Location of Command Subcarrier
(f_o = 2555 cps)

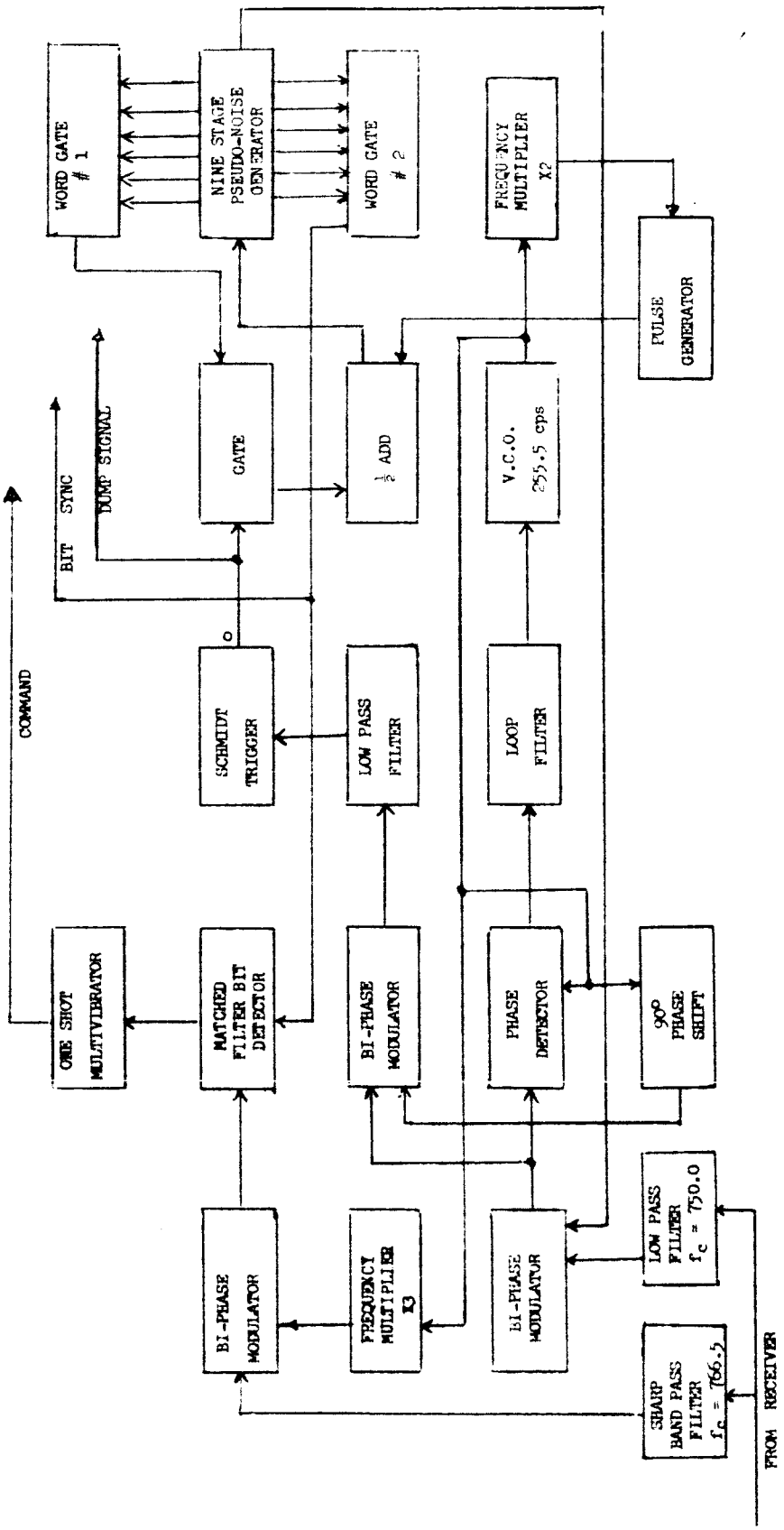

Figure 4. COMMAND DETECTOR BLOCK DIAGRAM

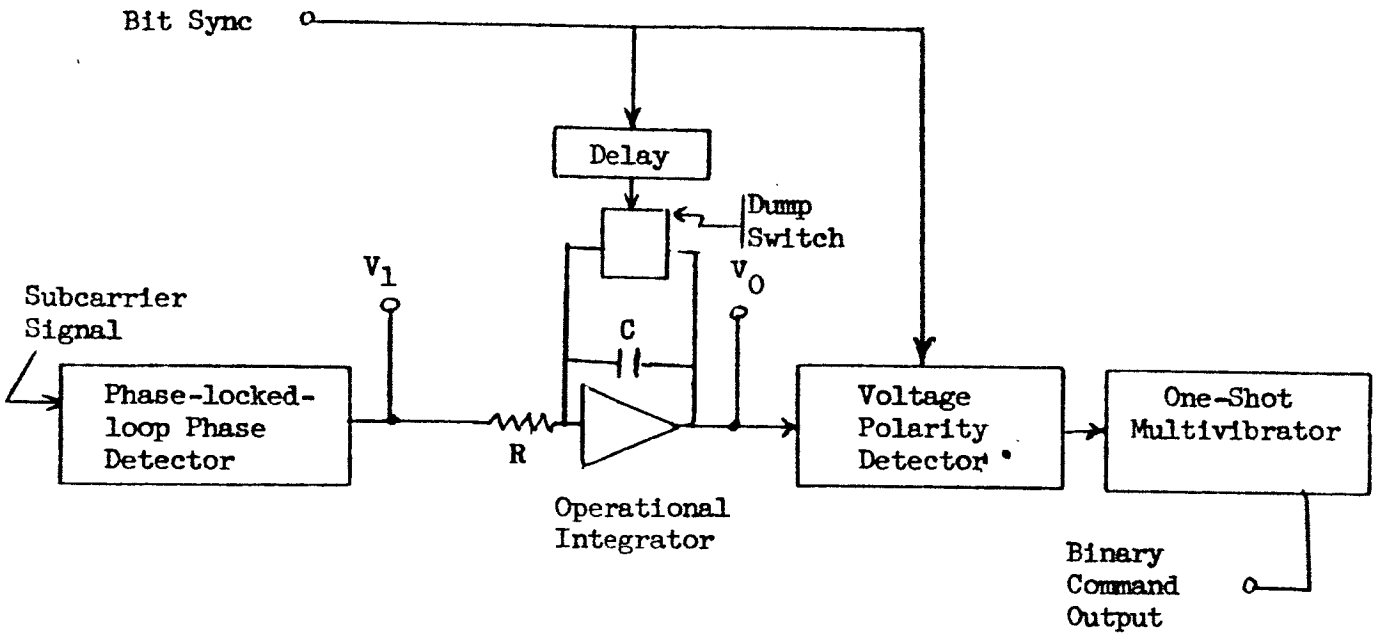

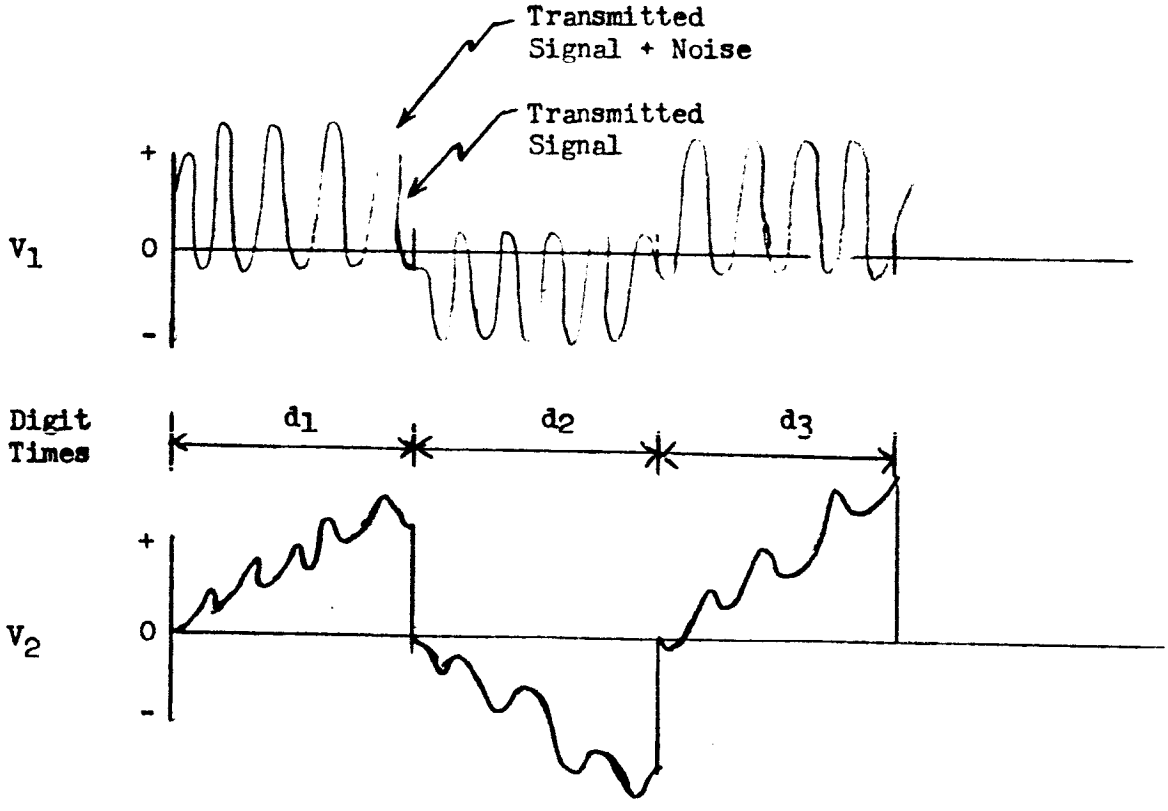

Figure 5. MATCHED FILTER DETECTOR

then dumped at the end of each digit time. A binary one is designated if V_o is positive, and a binary zero is designated if V_o is negative. As may be intuitively deduced from the sketched voltage waveforms, this form of bit detection is less susceptable to noise induced errors than conventional level sampling techniques.

5.5 Output Signals

The output of the Command Detector will consist of three DC coupled signals. The command and sync signals will consist of return-to-zero voltage pulses having the following characteristics:

a)	Load resistance	$\geq$ 600 ohms
b)	Pulse amplitude	$\geq$ 1 volt, $\leq$ 6 volts
c)	Rise time	$\leq$ 150 microseconds
d)	Duration	$\geq$ 1 millisecond, $\leq$ 100 milliseconds
e)	Decay time	$\leq$ 375 microseconds
f)	Null level	$\leq$ 0.10 volts

The dump signal will be a DC coupled potential in the range from +1.0 to +6.0 volts which drops to $\leq$ 0.1 volt when the pseudo-noise sequence becomes correlated. Each of these signals is applied to the input of the Command Decoder.

5.6 Command Detector Power

The Command Detector will share an isolated electrical power converter with the Command Decoder. The specific power requirements are listed in Table II. The average power consumption will be approximately 1.8 watts.

5.7 Mechanical Design

The Command Detector will be contained in the standard spacecraft subchassis described by JPL Drawing No. D-3152974. The digital circuitry will be composed of standard building block modules. The total weight will be approximately 2.7 pounds.

6.0 COMMAND DECODER DESIGN

6.1 Input Signal Characteristics

The Command Decoder input signals are identical to the Command Detector output signals described in paragraph 3.5.

Table II. COMMAND SYSTEM POWER

Unit	Voltage	Absolute Voltage Tolerance	Allowable Ripple & Noise Voltage	Maximum Average Current (1)	Estimated Peak Current (2)	Estimated Average Current (3)	Maximum Average Power	Estimated Average Power
Command Detector	+28 vdc	±10%	≤0.8v peak/peak	0.015 amp	0.015 amp	0.015 amp	0.42 watt	0.42 watt
Command Decoder	+28 vdc	same	same	0.005 amp	0.060 amp	0.005 amp	0.14 watt	0.14 watt
Command Detector	+6 vdc	±5%	≤0.3v peak/peak	0.400 amp	0.200 amp	0.200 amp	2.40 watt	1.20 watt
Command Decoder	+6 vdc	same	same	0.300 amp	0.200 amp	0.200 amp	1.80 watt	1.20 watt
Command Detector	-6 vdc	±5%	≤0.3v peak/peak	0.030 amp	0.030 amp	0.030 amp	0.18 watt	0.18 watt
Command Decoder	-6 vdc	same	same	0.020 amp	0.000 amp	0.000 amp	0.12 watt	0.00 watt

Net Maximum Average Power 5.06 watt
Net Estimated Average Power 3.14 watt

(1) This current is allowed by the equipment specifications. (May prove pessimistic)

(2) This estimate may be exceeded, but it should prove fairly accurate.

(3) The duration of the peak will be less than seconds, and the peaks will occur no more frequently than once each 40 seconds.

6.2 Subsystem Logic

The Command Decoder will consist of elements which perform the logical operations depicted in Figure 6. Digit d_o will set F/F_1. This opens the appropriate gates to cause the program control scaler to begin counting sync pulses and to cause digits d_1 through d_{17} to be read into the shift register. The 18th sync pulse causes the address decode matrix to be interrogated. A two millisecond delay must be built into SW_1 to prevent the 19th sync pulse from actuating SW_1. If the address is that of a real-time command, the appropriate transistor switch is energized to cause a 150 ± 50 millisecond relay closure for the command user. If the command address is that of a stored command, F/F_3 is set, thereby allowing the address block and the data block to be read out of the shift register. The setting and resetting of F/F_2 by the 23rd and 25th sync pulses causes two zeros to be inserted into the readout command word between digits d_5 and d_6. The readout of the command is completed at the occurrence of the 38th sample pulse. The 39th sync pulse causes F/F_1 to be reset. This in turn causes F/F_3 and the binary scaler to be reset thus rendering the Command Decoder ready to accept another command. The Command Decoder shall be so mechanized that the occurrence of the unused address shall result in no command output. Further, the occurrence of a "dump signal" during the time a command is being read into the shift register shall cause the Command Decoder to immediately return to the reset state without issuing any command output. No command output shall result when power is initially supplied to the Command Decoder.

6.3 Real-Time Command Output Interface

Each real-time command user will have access to any two contacts of a set single-pole, double-throw relay contacts. The relay actuation time will be 150 ± 50 milliseconds. The relay actuation occurs 18.0 seconds after the leading edge of the first digit of the command word.

6.4 Stored Command Output Interface

The commands are transferred to the CC&S by means of the non-return-to-zero control of the stored command output relay shown in Figure 6. The sample pulse takes the form of a momentary closure of an isolated transistor switch.

The transient performance of the sample pulse switch and a schematic of the test circuit are presented in Figure 7. The sample pulse lags the leading edge of the command bit by 150 ± 50 milliseconds.

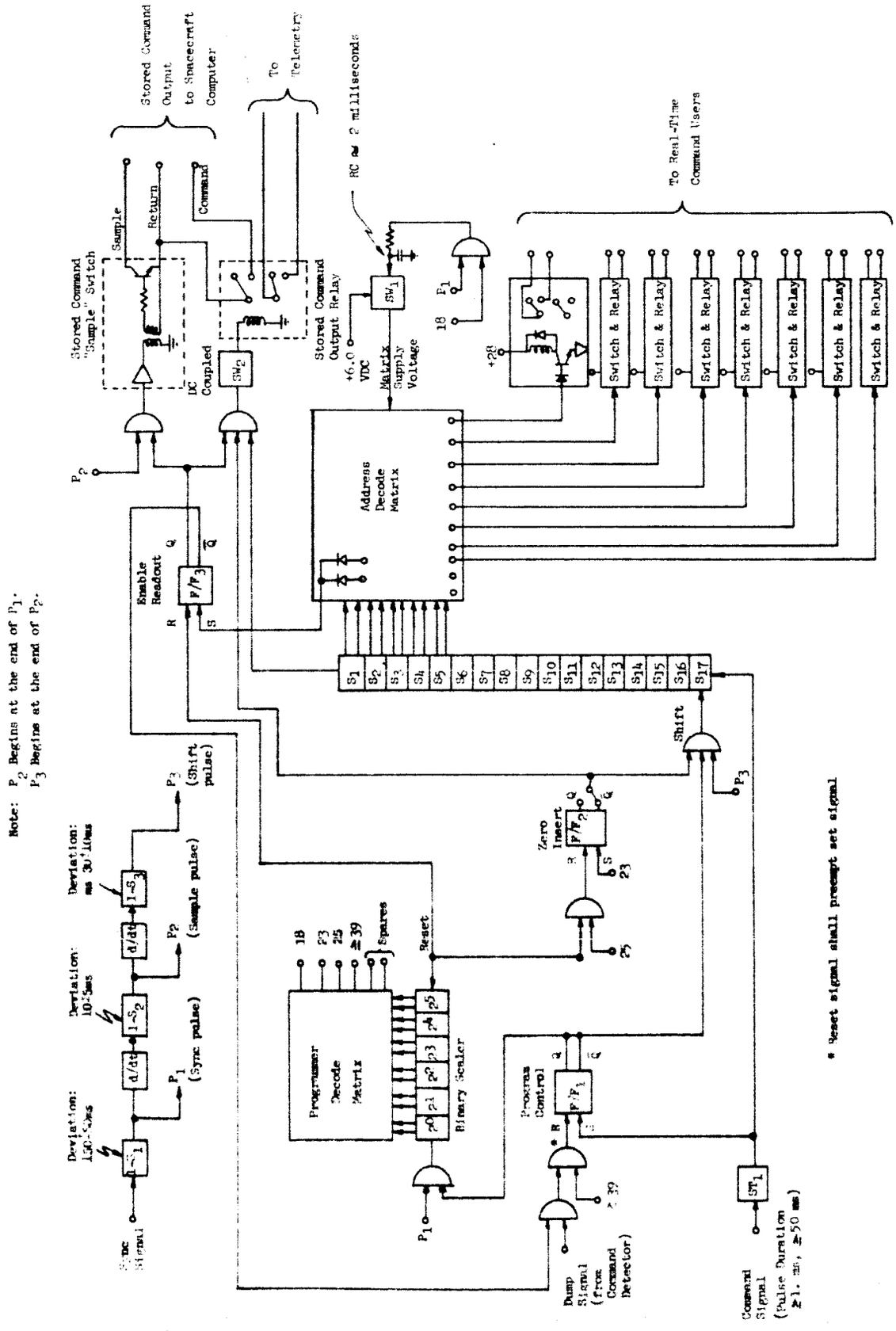

Note: P_2 Begins at the end of P_1.
P_3 Begins at the end of P_2.

Figure 6

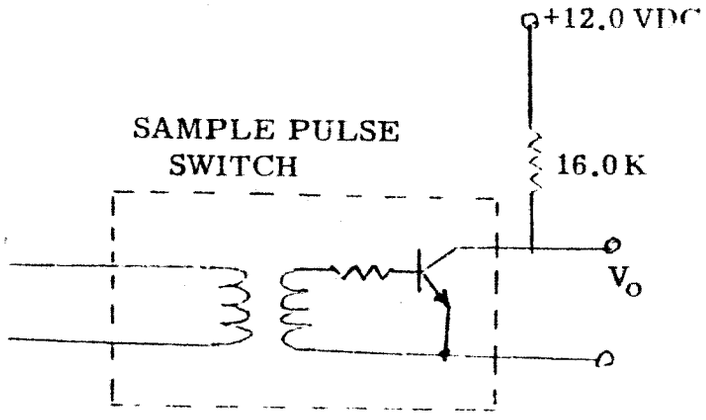

TEST CIRCUIT

$75\mu s \leq T_1 \leq 150\mu s$

$75\mu s \leq T_2 \leq 375\mu s$

$T = 10 \pm 5$ Milliseconds

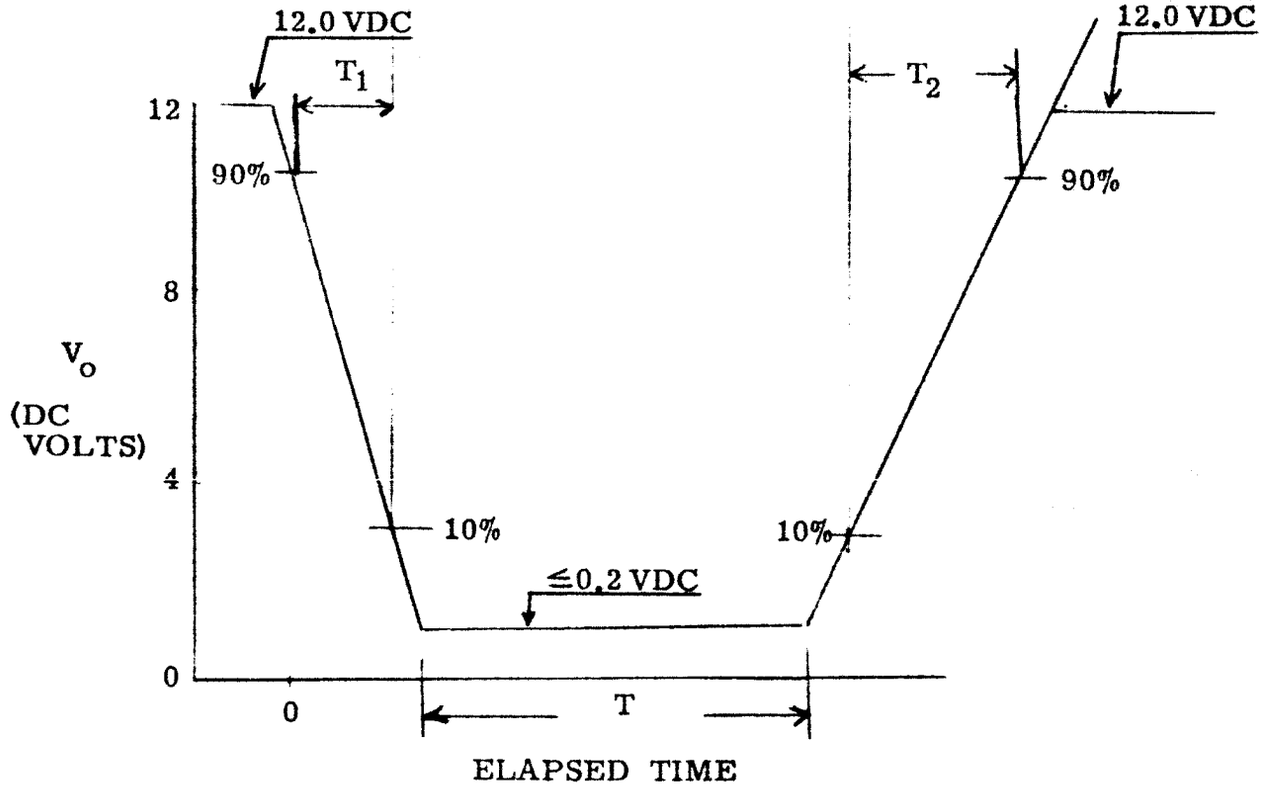

Figure 7. SAMPLE PULSE WAVEFORM

6.5 Command Decoder Power

The Command Decoder and the Command Detector will share a single electrical power converter. The specific Command Decoder power requirements are listed in Table II. The average power consumption will be approximately 1.4 watts.

6.6 Mechanical Design

The Command Decoder will be contained in the standard spacecraft subchassis described by JPL Drawing No. D-3152971. The digital circuitry will be composed of standard building block modules. The total subsystem weight will be approximately 2.8 pounds.

7.0 SYSTEM PERFORMANCE

A command signal flow diagram is presented in Figure 8. The probability of a noise induced command word error is required to be $\leq 5 \times 10^{-4}$ for RA-345. If the ratio of the command subcarrier power to the noise power spectral density $\left(\frac{P_{sc}}{N_1}\right)$ is +9.6 db in the proposed system, the probability of a noise induced command word error is less than 1.8×10^{-4}.

The value of $\left(\frac{P_{sc}}{N_1}\right)$ is related to the various system parameters by the following equation:

$$-NF - P_N + P_T + \alpha - L_s - L_g - L_F - L_p + G_T + G_R - L_p^* = \left(\frac{P_{sc}}{N_1}\right)$$

P_T $\triangleq$ Total transmitted power = 53 dbm (200 watts)

α $\triangleq$ Power in each subcarrier relative to total transmitted power = -7.3 db

L_s $\triangleq$ Space Loss in decibels = 95.6 + 20 log d (miles), -203.6 db at moon distance

L_g $\triangleq$ Ground cable and duplexer loss = 2.0 db

L_F $\triangleq$ Flight cable and duplexer loss = 1.0 db

L_p $\triangleq$ Design pad = 10 db

G_T $\triangleq$ Goldstone 85-foot transmitting antenna gain = 43.0 db

G_R $\triangleq$ Spacecraft "Omni" antenna gain = -4.0 db

P_N $\triangleq$ Noise power per cps at $290^{\circ}K$ = -174.0 dbm/cps

NF $\triangleq$ Transponder Receiver noise figure = 14.0 db

L_p^* $\triangleq$ Excess pad (db)

After substituting the known parameters and the space loss at moon distance, one may solve for L_p^*.

$$-14.0 + 160.0 + 53.0 - 7.3 - 203.6 - 2 - 1 - 10 + 43 - 4 - 9.6 = L_p^*$$

$$L_p^* = 14.5 \text{ db}$$

Thus, under the stated assumptions, the probability of a command word error is less than 1.8×10^{-4} at moon distance.

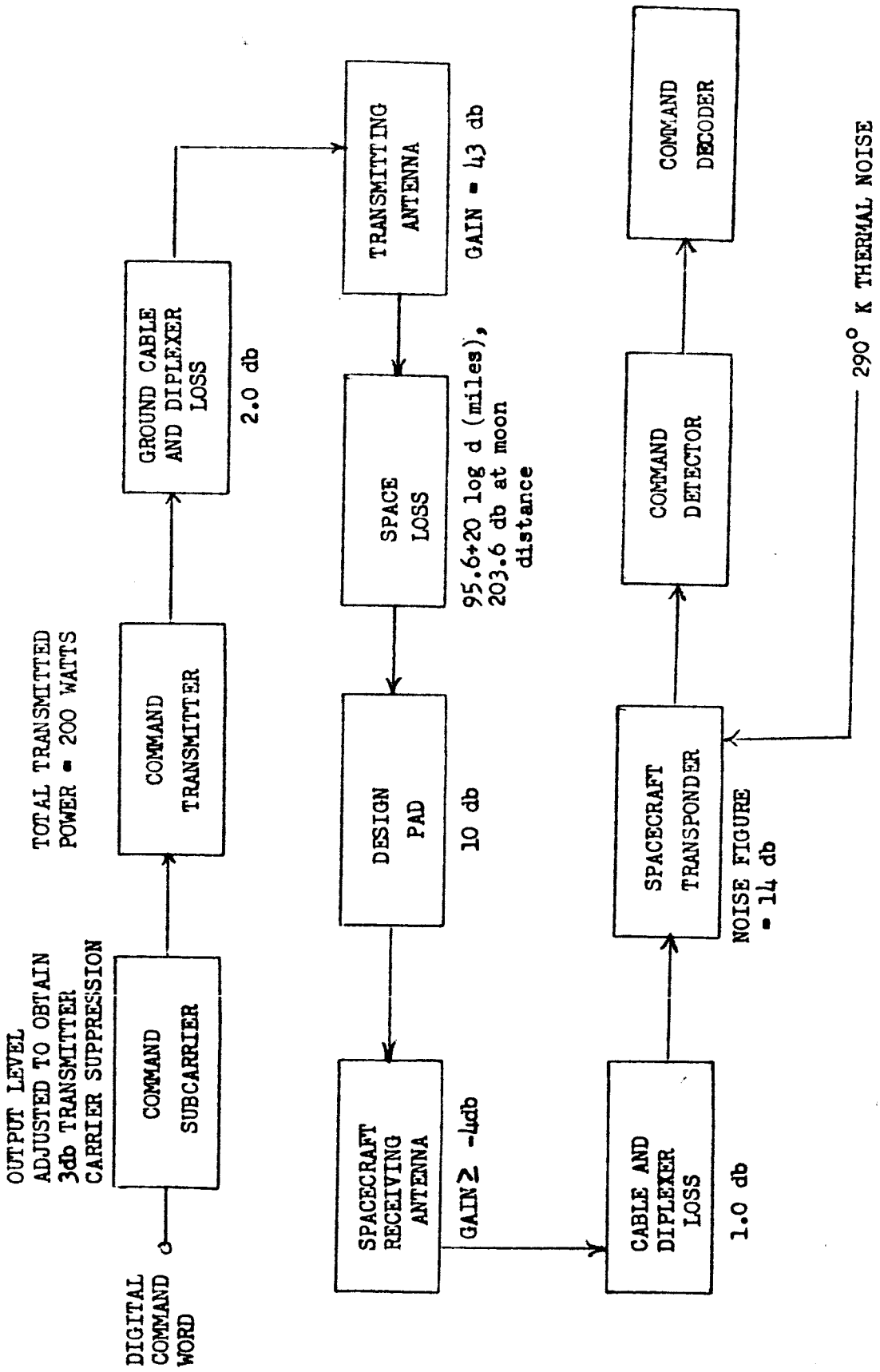

Figure 8. COMMAND SIGNAL FLOW DIAGRAM

(Insert in Spacecraft Design Specification Book)

APPROVED:

System: M. R. Mesnard

Subsystem: Evan Linderman

JET PROPULSION LABORATORY

Spec. No. RA 345-4-410 C
15 May 1962

✱ DENOTES CHANGE

SUPERSEDES:
RA 345-4-410 B
Dated: 31 October 1961

FUNCTIONAL SPECIFICATION
RANGER RA 345 SPACECRAFT FLIGHT EQUIPMENT
CENTRAL COMPUTER AND SEQUENCER

✱ 1.0 SCOPE

This specification lists the functions, in chronological order, which the RA 345 spacecraft Central Computer and Sequencer (CC&S) performs during prelaunch, launch, flight, and pre-impact operations. The equipment with which the CC&S operates and the characteristics of the input and output signals are described. Accuracy, operational and functional requirements are listed.

2.0 APPLICABLE DOCUMENTS

✱ 2.1 The following documents apply to this specification:

SPECIFICATIONS

Jet Propulsion Laboratory

Spacecraft Design Specification Book, RA 345

DRAWINGS

Jet Propulsion Laboratory

2-102561 RA 345 Central Computer and Sequencer

3.0 REQUIREMENTS

3.1 Introduction

The RA 345 Central Computer and Sequencer (CC&S) is the unit which will supply internal timing in the spacecraft for synchronization, timer control, and operational sequence programming. The CC&S will function with fixed inputs to perform predetermined events. It will receive quantitative radio inputs (to store and use later) and radio-execute commands for the midcourse and terminal maneuvers, as well as accelerometer signals during the midcourse maneuver. These input signals and commands will be in a serial digital form. The CC&S outputs will actuate spacecraft functions which will occur at predetermined, commanded, or computed times. Various pulse train and waveform outputs also will be supplied to the spacecraft.

3.2 CC&S Functions

An over-all picture of input and output functions required of the CC&S is shown in the figure 3.2-I, Functional operations are separated into the subsystems with which the CC&S is associated prior to launch and during flight. Input functions are indicated by arrows and appropriate relay and electronic switches are indicated by the initials "R" and "ES".

3.2.1 Functional Subsystem - CC&S Timing and Waveform Requirements

Since timing, gating, and switching are the main functions of the CC&S, the functional requirements will be considered more specifically by subsystem groups. These input functions, with which the CC&S will operate, and the required output functions are shown by the following wave shape diagrams.

3.2.1.1 Attitude Control

As seen in figure 3.2-I, the attitude control subsystem requires ten switching functions to perform its operation. The timing of these functions is indicated in the functional chronological requirements.

The accelerometer and gyros are located within the attitude control equipment. The accelerometer provides the following output to the CC&S.

a. (ES-1) Velocity increment for thrust termination

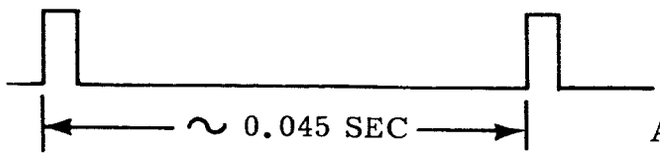

Rise time: $\leq 5.0\mu s$
Fall time: $\leq 5.0\mu s$
Duration: 1.25ms
Average rate: 22.4 pps

The average pulse rate from the accelerometer is about 22.4 pps with a maximum rate of 25 pps.

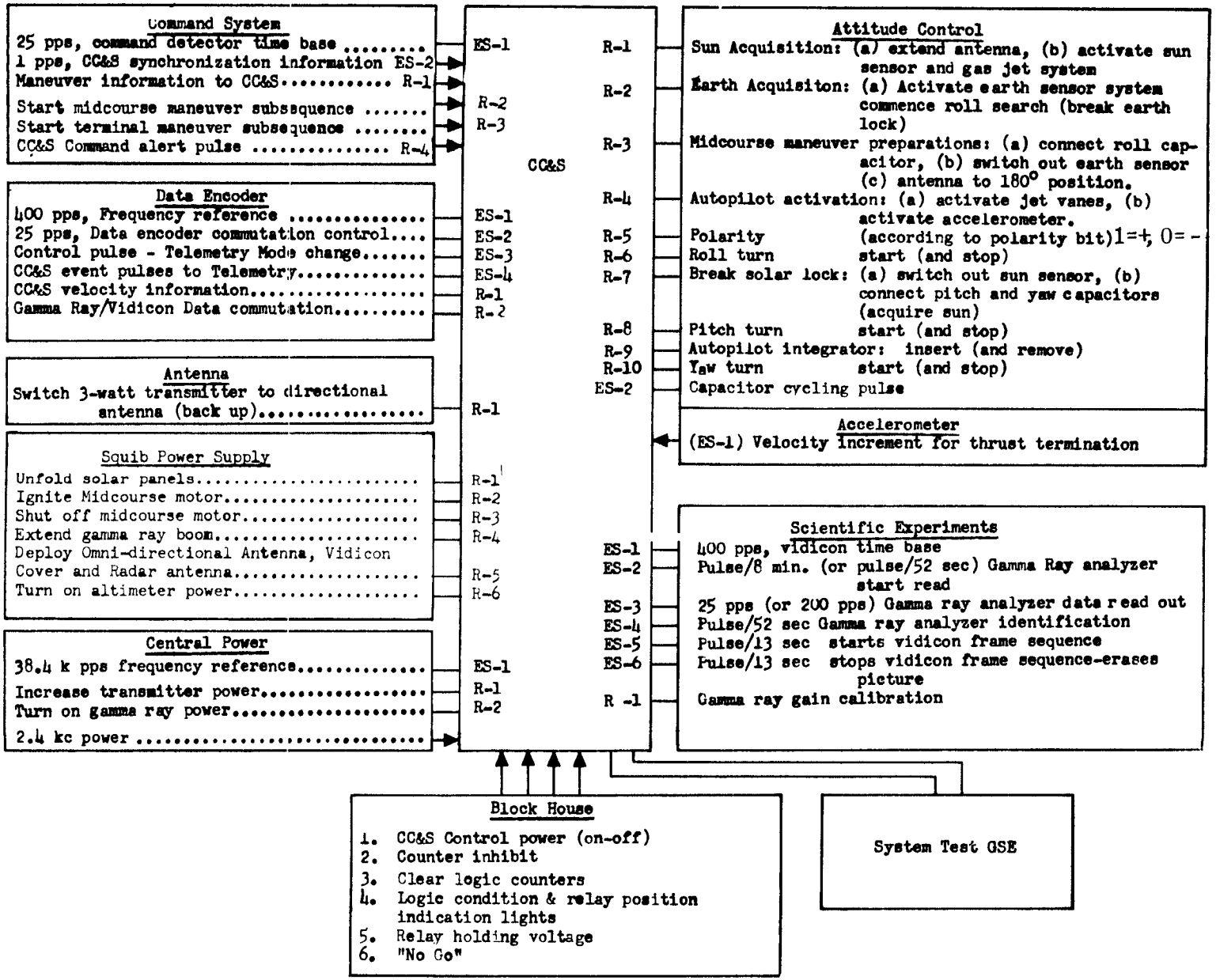

Figure 3.2-I. Functions of the CC&S

b. (ES-2) Capacitor cycling pulse

Rise time: $\leq$ 1.0μsec
Fall time: $\leq$ 350μsec
Duration: 150 ±100msec

The capacitor charging pulse is supplied for cycling the gyro capacitor when the first real time command is sent for spacecraft maneuvers.

3.2.1.2 Central Power

A 38.4 kpps square wave output as shown below is needed for a power frequency reference.

a. (ES-1) 38.4 kpps frequency reference

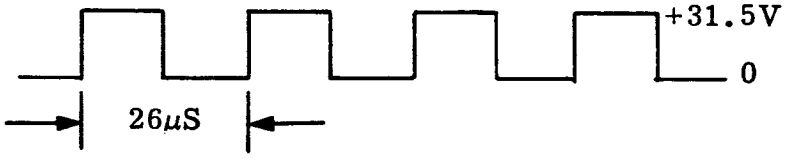

Rise time: $\leq$ 1.0μsec
Fall time: $\leq$ 1.0μsec
Duration: 13μsec
Frequency: 38.4 kpps

b. 2.4 KC power to CC&S

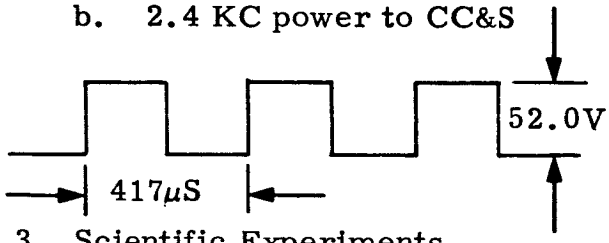

Rise time: 20μs
Fall time: 20μs
Duration: 209μs

3.2.1.3 Scientific Experiments

The two scientific experiments require control waveshapes from the CC&S for two modes of operation. During the first mode only the gamma ray experiment is operated. During the second mode the vidicon pictures are transmitted to earth on a time-sharing basis with gamma ray data. These waveshapes, including many of the functional design tolerances, are shown in paragraph 3.2.1.3.1.

In the midcourse mode, the gamma ray analyzer start-read pulses shall occur at 8.0 minute intervals. The read-out pulse train shall be initiated 60 ms after the start-read pulse and must have a frequency of 25 pps. The gain change shall occur simultaneously with the start-read pulse.

In the terminal mode the vidicon transmission period is 10 sec/frame and the erase read-out period is 3 sec. The identification pulse must occur 40 ms after the start-read pulse. The gamma ray data read-out pulse train must be initiated 7.5 ms after the identification pulse and must have a frequency of 200 pps. The identification and read-out pulse trains must be synchronized to 400 cps.

3.2.1.3.1 Wave Shapes for Scientific Experiments

a. (ES-1) 400 pps Vidicon time base

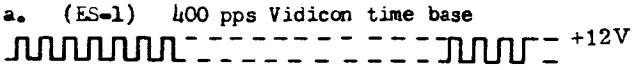

Rise time: $\leq$ 1.0 μs
Fall time: $\leq$ 350 μs
Duration: 1000 ±300 μs

Operation From A + 4 Hrs +1.0 min Until C +21.5 Min in Terminal Maneuver

b. (ES-2) a Pulse/8 min Gamma Ray analyzer start read

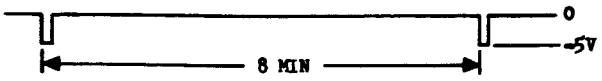

Rise time: $\leq$ 1.0 μs
Fall Time: $\leq$ 350 μs
Duration: 1000 ±300 μs

c. (ES-3) a 25 pps Gamma Ray analyzer data read out

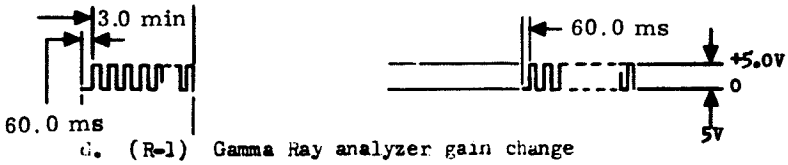

Rise time: $\leq$ 1.0 μs
Fall time: $\leq$ 350 μs
Duration: 1000 ± 300 μs

d. (R-1) Gamma Ray analyzer gain change

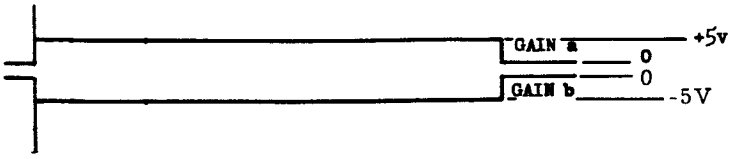

Relay settling time $\leq$ 1.0 ms
Duration: 8.0 min

Alternate Operation During Photographing of Moon Surface (C +21.5 to 29 min) Until Impact

e. (R-1) Gamma Ray analyzer gain change

Relay settling time: $\leq$ 1.0 msec

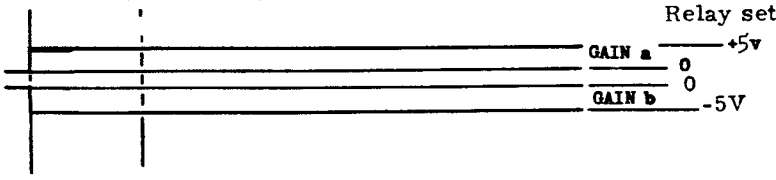

Duration: gain changes 312. sec. later and remains fixed

f. (ES-2) b Pulse/52 seconds Gamma Ray analyzer start read

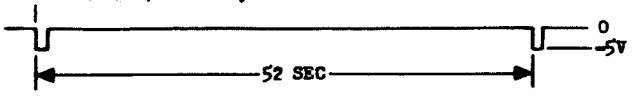

Rise time: $\leq$ 1.0 μs
Fall time: $\leq$ 350 μs
Duration: 1000 ± 300 μs

g. (ES-4) b Pulse/52 seconds Gamma Ray analyzer identification

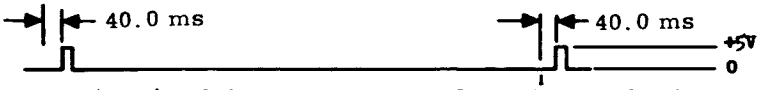

Rise time: $\leq$ 1.0 μs
Fall time: $\leq$ 350 μs
Duration: 1000 ± 300 μs

h. (ES-3) 200 pps Gamma Ray analyzer data read out

Rise time: $\leq$ 1.0 μs
Fall time: $\leq$ 350 μs
Duration: 1000 ± 300 μs

i. (ES-5) pulse/13 sec, Start vidicon frame sequence

Rise time: $\leq$ 1.0 μs
Fall time: $\leq$ 350 μs
Duration: 1000 ± 300 μs

j. (ES-6) pulse/13 sec, Stop vidicon frame sequence-erase picture

Rise time: $\leq$ 1.0 μs
Fall time: $\leq$ 350 μs
Duration: 1000 ± 300 μs

3.2.1.4 COMMAND SYSTEM

a. (ES-1) 25 pps, Command detector time base

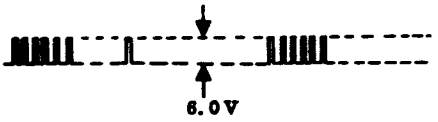

Rise time: $\leq 1.0\ \mu s$
Fall time: $\leq 350\ \mu s$
Duration: $1000\ \mu s \pm 300\ \mu s$

b. (ES-2) 1 pps, CC&S synchronization information

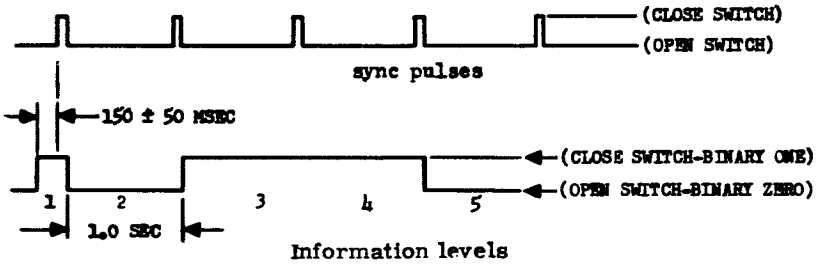

Rise time: $\leq 5.0\ \mu s$
Fall time: $\leq 5.0\ \mu s$
Duration: 5.0 to 15 ms

Note: 1st bit time is less than the normal one second

c. (ES-3) CC&S Command Alert Pulse

Settling time: ≤ 1.0 ms
Duration: 150 ±50.0 msec

(R-1) Maneuver information to CC&S

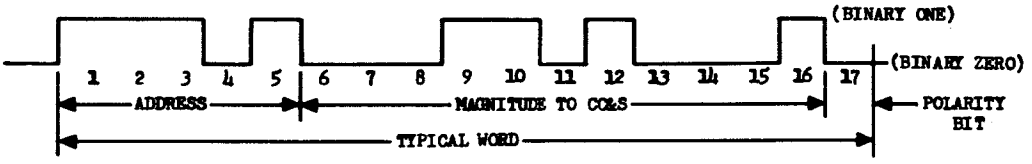

Bit rate: 1 bit/sec
Information: Non-return to zero impedance levels

Total word length 17 bits
(1) Magnitude - 11 bits
(2) Address - 5 bits
(3) Polarity - 1 bit ("1" is plus and "0" is minus)

Command Word Address

Midcourse
(1) Roll 10101
(2) Pitch 11101
(3) Velocity increment..00011

Terminal maneuver
(1) First pitch.....10011
(2) Yaw.....01011
(3) Second pitch.....11011

Address: Least significant bit on left (#1)
Magnitude: Weighted to 1.0 second in time and 0.1 ft/sec in velocity increment
Least significant bit on left (#6)

e. (R-2) Start midcourse maneuver subsequence

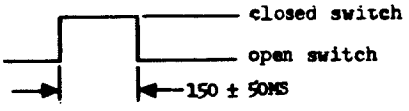

Relay setting time: ≤ 1.0 ms
Duration: 150 ± 50 ms

f. (R-3) Start terminal maneuver subsequence

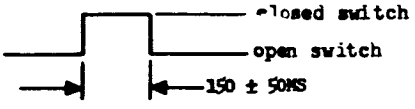

relay settling time ≤ 1.0 ms
duration: 150 ± 50 ms

3.2.1.5 Data Encoder

a. (ES-1) 400 pps, Frequency reference

Rise time: $\leq 1.0\ \mu s$
Fall time: $\leq 350\ \mu s$
Duration: 1.0 ms ± 30%

b. (ES-2) 25 pps, Data encoder Commutation control

Rise time: $\leq 1.0\ \mu s$
Fall time: $\leq 350\ \mu s$
Duration: 1.0 ms ± 30%

c. (ES-3) Control pulse - telemetry mode change

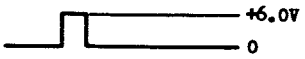

Noise rise duration: 0.5 ms
Fall time: $\leq 350\ \mu s$
Duration: 1.0 ms ± 30%

d. (ES-4) CC&S event pulses to telemetry

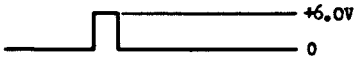

Rise time: $\leq 1.0\ \mu s$
Fall time: $\leq 350\ \mu s$
Duration: 1.0 ms ± 30%

e. (R-1) CC&S velocity information

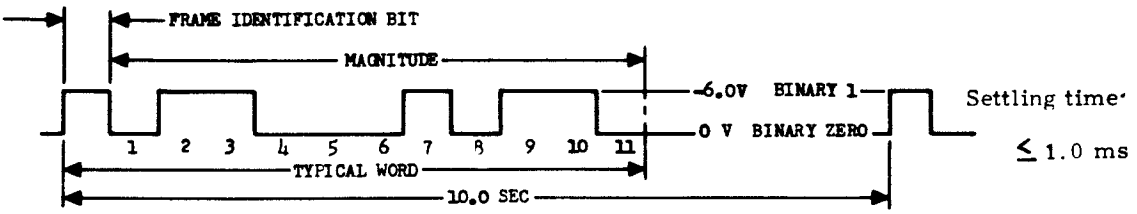

Word sampling rate: once every 10.0 seconds
Bit rate: 2.5 bits/second serially
Word length: 11 bits
Information form: non-return to zero, least significant bit #1, resolution 0.1 ft/sec
Signal range: 0 to 204.6 ft/sec
Weighting: coded sequence

f. (R-2) Gamma Ray/Vidicon data commutation cycle

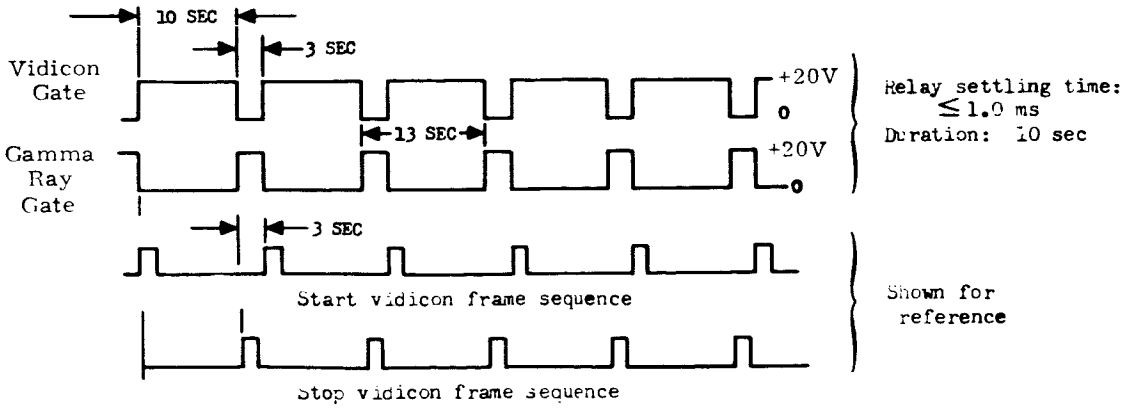

3.2.2 Telemetry

The CC&S shall supply telemetry information which will indicate CC&S operation. Event pulses (paragraph 3.2.1.5 d.) are to be supplied to the data encoder at the times shown in table 3.2.2-I. While several events may take place at an indicated time, only one event pulse may be expected. Table 3.2.2-I indicates the discreet times at which the event pulses may be expected.

Table 3.2.2-I. Telemetry Event Channel Times

Times shown in parenthesis refer to RA3 and RA4 only.
Steps 3, 12, 28, 29, 31 and 32 are for RA5 only.

	Time	Event
1.	A - 1 min	Clear and counting verification
2.	A + 23 min	Increase transmitter power
3.	A + 24 min	Event indication (not applicable to this mission)
4.	A + 48 min (31)	Unfold solar panels
5.	A + 51 min (34)	Sun acquisition (turn on A/C dc power)
6.	A + 3 hrs 31 min	Earth acquisition (turn on A/C 1Ø 400 cycle power)
7.	A + 4 hrs 1 min	Turn on gamma-ray experiment
8.	A + 4 hrs 2 min	Turn on gamma-ray gain change
9.	A + 15 hrs 31 min (approx)	Capacitor cycling pulse (receipt of roll address)
10.	A + 16 hrs approx (B)	Initiate midcourse maneuver
11.	B + 5 sec	Start roll angle turn
12.	A + 16 hrs 6 min	Switch to directional antenna, (backup)
13.	B + 5 to 455 sec	Stop roll angle turn
14.	B + 9.5 min	Break solar lock, start pitch angle turn
15.	B + 9.5 to 24.5 min	Stop pitch angle turn
16.	B + 26.5 min	Start midcourse motor
17.	B + 26.5 to 27.6 min	Midcourse motor shut-off
18.	B + 30 min	Shut off autopilot, start sun acquisition
19.	B + 58 min	Start earth acquisition
20.	B + 2.5 hrs	Extend gamma-ray boom
21.	A + 64.5 hrs (approx)	Capacitor cycling pulse (receipt of 1st pitch address)
22.	A + 65 hrs (approx) (C + 5 sec)	Initiate terminal maneuver, start 1st pitch turn
23.	C + 5 to 455 sec	Stop 1st pitch turn
24.	C + 9.5 min	Start yaw angle turn
25.	C + 9.5 to 19.5 min	Stop yaw angle turn
26.	C + 21.5	Start 2nd pitch turn
27.	C + 21.5 to 29 min	Stop 2nd pitch turn, initiate video pulse train, initiate T/M Mode IV, initiate omni and altimeter antenna deployments
28.	C + 40 min	Event indication (not applicable to this mission)
29.	C + 45 min	Event indication (not applicable to this mission)
30.	C + 1 hr 4 min	Turn on radio altimeter
31.	C + 1 hr 40 min	Reacquire sun (in event of lunar miss)
32.	C + 10,000 sec	Stop gamma-ray vidicon sequencing

NOTE: A = Time of launch

B = Time of initiation of midcourse maneuver

C = Time of initiation of terminal maneuver (65 minutes before lunar impact)

3.2.3 Antenna, Capsule, and Squib Power Supply

These operations require switching functions as indicated under 3.3.

3.3 Functional Chronological Requirements

The order in which the CC&S receives the above inputs, performs switching operations, and provides the required waveforms is shown in table 3.3-I.

3.3.1 Prelaunch-Launch

The CC&S is controlled from and gives logic states and relay position information to a block house launch console. Before spacecraft power is turned on (about A-180 minutes), GSE control power is applied to the CC&S, the counter is inhibited, logic and relay circuits are cleared and this initial condition is observed in the block house. CC&S power comes on with spacecraft power, and the oscillator and divider circuits are also started simultaneously. Timing pulses are supplied to all subsystems getting a frequency reference at this time.

At A-2 minutes the CC&S counter is started in order to obtain an indication that it is operating before the vehicle is committed to flight. It should be noted that, in computing the preset event times stored in the memory, that the times in table 3.3-I are referred to launch time. Therefore, since the CC&S sequence starts two minutes early, all memory times must be increased by this nominal time from CC&S to lift-off.

To ensure that the missile lift-off time and the CC&S lift-off time occur within ±30 seconds, the CC&S must be equipped with a counter inhibit input that is used to hold the CC&S time during holds in the countdown occurring after the CC&S is started. In case the countdown time is set back before A-2 minutes, the CC&S must be capable of being reset.

Not all words in the memory need to be timed from lift-off. All preset times in the midcourse and terminal maneuvers will be timed from the receipt of a ground "execute" command to start the maneuvers. All commanded turn times and the velocity increment will be radio command stored times and will be used in the midcourse and terminal subsequences.

The CC&S operations after launch and during the first cruise are to be by stored time commands as shown in table 3.3-I.

3.3.2 Midcourse Maneuver

The spacecraft will receive a four-word command for the midcourse maneuver. The first three words will contain duration and polarity of turns and velocity magnitude information and will be stored in CC&S memory slots. This information is digital and has the characteristics shown in 3.2.1.4.d. The fourth word of the command is an execute

✱ Table 3.3-I. CC&S Functional Operations Requirements

Times shown in parenthesis refer to RA3 and RA4 only.
Steps 15, 37, and 38 refer to RA5 only.

		A. LAUNCH, INJECTION AND CRUISE	
1.	A > - 180 min	CC&S - GSE Control Power On (precedes spacecraft power turn on), Counter inhibited, Clear logic and/or relays, (observe reset condition)	Command - Blockhouse
2.	A - 2 min	Start CC&S counter	Command - Blockhouse
3.	A - 0	Lift off	Event
4.	A + 23 min	Increase transmitter power	CC&S - stored time command
5.	A + 48 min (31)	Unfold solar panels	CC&S - stored time command
6.	A + 51 min (34)	Turn on A/C dc power a. Extend antenna b. Activate gas jet system c. Activate sun sensor system d. Commence solar acquisition	CC&S - stored time command
7.	A + 81 min	Sun Acquisition complete	Event - A/C
8.	A + 3 hr 31 min	Turn on A/C 1Ø, 400 cps a. Activate earth sensor system b. Start roll search command	CC&S - stored time command
9.	>A + 3 hr 31 min	Earth sensor attains light signal a. Stop roll search b. Start hinge servo	Event - A/C
10.	A + 4 hr	Acquisition complete	Event - A/C
11.	A + 4 hr, 1 min	Turn on gamma ray system	CC&S - stored time command
12.	A + 4 hr and 2 min	Initiate timing pulses	CC&S - stored time command
		B. MIDCOURSE MANEUVER	
13.	A + 15.5 hours (nominal)	From midcourse tracking and correction computation, transmit midcourse maneuver roll and pitch duration and impulse magnitude information	Ground command to the CC&S

Table 3.3-I. CC&S Functional Operations Requirements (Cont'd)

14. A + 15.5 hours	A/C capacitor cycling pulse receipt of roll address	Ground address command to CC&S
15. A + 16 hrs, 6 min	Switch to high gain antenna (backup)	CC&S - stored time command
16. B	Initiate midcourse maneuver sequence. TM Mode II	Ground command to the CC&S for start midcourse maneuver subsequence
17. B + 5.0 sec	Turn on midcourse autopilot, jet vane actuators, accelerometer. Turn off earth sensor, (1Ø 400 cps). Connect roll channel capacitor, initiate command polarity, command roll angle turn, provide antenna 180° command.	
18. B + 5 sec to B + 455 sec	Stop roll angle turn, switch to pitch channel	CC&S sequence command
19. B + 9.5 min	Switch out sun sensor signals, connect pitch and yaw channel capacitors, initiate command polarity, command pitch angle turn	CC&S sequence command
20. B + 9.5 to B + 24.5 min	Stop pitch angle turn, switch to roll channel	CC&S sequence command
21. B + 26.5 min	Gate accelerometer into the shut-off computer, command midcourse motor ignition, disconnect autopilot integrator reset	CC&S sequence command
22. B + 26.5 to B + 27.6 min	Midcourse motor shut-off (computation)	CC&S sequence command
23. B + 30 min (28)	Turn off midcourse autopilot, jet vane actuators, and accelerometer; stop shut-off computer; switch out yaw, roll, and pitch channel capacitors, provide antenna reposition, commence solar acquisition. Initiate T/M Mode III	CC&S sequence command
24. B + 58 min	Turn on A/C 1Ø 400 cps; activate earth sensor system, start roll search command	CC&S sequence command
25. $\geq$B + 58 min	Earth sensor attains light signal; stop roll search, start hinge servo	Event - A/C
26. B + 88 min	Re-acquisition complete	Event - A/C
27. B + 2.5 hr	Extend gamma ray boom	CC&S sequence command

Table 3.3-I. CC&S Functional Operations Requirements (Cont'd)

		C. TERMINAL MANEUVER	
28.	A + 64.5 hr (nominal)	Transmit spacecraft turn duration (pitch-yaw-pitch) information	Ground command to the CC&S
29.	A + 64.5 hr +	A/C capacitor cycling pulse (receipt of 1st pitch address)	Ground address command to CC&S
30.	C + 5.0 sec	Initiate terminal maneuver sequence. Select terminal mode, switch out sun sensor signals, connect pitch and yaw channel capacitors, initiate command polarity, command pitch angle turn.	Ground command to the CC&S for start of terminal maneuver subsequence
31.	C + 5.0 to C + 455 sec	Stop pitch angle turn, switch to yaw channel	CC&S sequence command
32.	C + 9.5 min	Initiate command polarity, command yaw angle turn	CC&S sequence command
33.	C + 9.5 to C + 19.5 min	Stop yaw angle turn swtich to pitch channel	CC&S sequence command
34.	C + 21.5 min	Initiate command polarity, command pitch angle turn	CC&S sequence command
35.	C + 21.5 to C + 29 min	Stop pitch angle turn, initiate vidicon pulse train, initiate T/M Mode IV. Initiate deployment of omni and altimeter antennas and vidicon lens cover	CC&S sequence command
36.	C + 64 min	Turn on radio altimeter	CC&S sequence command
37.	C + 1 hr 40 min	Reacquire sun (in event of Lunar miss)	CC&S sequence command
38.	C + 10,000 sec	Stop vidicon - gamma ray sequencing	CC&S sequence command

command and is to be sent at the precise time required to start the maneuver sequence. A command alert pulse will be sent to the CC&S just before the command information to ensure logic reset to improve reliability.

During the midcourse maneuver, accelerometer information as shown in 3.2.1.1 will be an input to the CC&S. The CC&S will use this digital information to determine the midcourse motor shut-off time. The velocity increment command has a resolution of 0.1 feet/second and a maximum value of 204.7 feet/second. The coded velocity increment in a CC&S register is computed or adjusted during the burning period of the midcourse motor using the accelerometer information and read-out to telemetry. This read-out will start just before ignition to get the stored coded velocity increment command and will end after thrust dies out to get the motor tail-off velocity and accelerometer null offset. The CC&S will read the adjusted coded velocity increment to the data encoder every ten seconds and will feed the data to telemetry at 2.5 bits/second serially as indicated in 3.2.1.5.e.

3.3.3 Terminal Maneuver

The spacecraft will receive a four-word command for the terminal maneuver. The first three words will contain the pitch-yaw-pitch turn duration and polarity information and are stored in CC&S memory slots. The information again is digital having the characteristics shown in 3.2.1.4.d. The fourth word is an execute command and sent at a precise time to start the maneuver.

The turn sequences are as listed in table 3.3-I. Toward the end of these turns the wave shapes described in 3.2.1.3.1e through j, must be supplied for the scientific experiments. Where the gamma ray data was taken more slowly during the flight (wave-forms 3.2.1.3.1.b, c, and d) this process is speeded up as the craft approaches the moon. These wave shapes control vidicon cycling and the commutation of this data at the data encoder as shown in 3.2.1.5.f.

Three switching functions, omni and altimeter antenna deployment, vidicon cover opening, and activation of the radio altimeter, take place in the last phase of this maneuver period. A command is given by the CC&S at C + 21.5 to C + 29 minutes to stop pitch turn and to start a 2 minute timer in squib power for the deployments. A stored time command is given at C + 64 minutes to activate the altimeter.

✱ 3.3.4 Post Terminal Maneuver

In the event of a lunar miss, a reacquire sun stored time will be given at C + 1 hr 40 min. (RA5 only).

✱ 3.3.5 Ground Tests - GSE

The CC&S is required to operate in conjunction with Ground Support Equipment (GSE) in many system, environmental, and dummy run tests

in preparation for launch operations. The GSE either needs or supplies the following functions in addition to the controls and indications described on the launch console:

a. Power for CC&S
b. 1 pps - CC&S time
c. 25 pps - accelerated time (x25) override
d. Reset to B time (initiate midcourse maneuver)
e. Reset to C time (initiate terminal maneuver)
f. Manual control and indication from each relay
g. Manual control of telemetry mode change and indication
h. Manual control and indication of scientific experiments sequences
i. Simulated command information, sync pulses, accelerometer pulses

The CC&S is thus able to function with the GSE prior to launch to determine proper CC&S operation during such control. The GSE uses a tape printer to automatically check out all functions and operations of the CC&S.

3.4 CC&S Timing Accuracy Requirements

The CC&S contains the master time standard or clock by which the spacecraft operations are synchronized and timed. The 38.4 kpps signal is supplied to central power to sync the 400 cps power inverter. The data encoder and scientific experiments are also supplied a 400 cps frequency reference signal. The accuracies required are:

a. Timing

1)	Clock frequency accuracy		0.01% - 3 σ
2)	Lift-off time accuracy (launch time)		±30 seconds
3)	Required time resolution	(a) Start maneuver	±7.0 seconds
		(b) Maneuver turn duration	1.0 second
4)	Maximum time capacity required	(a) Launch sequence	1,000 min
		(b) Maneuver sequence	10,000 sec
5)	Velocity resolution required		0.1 ft/sec

b. Radio Command Information

1)	Resolution required for commanded turn duration		1.0 second
2)	Maximum required turn duration		900 seconds
3)	Polarity		±
4)	Input data rate		1 bit/second
5)	Start maneuver accuracy	(a) Midcourse	±5 minutes
		(b) Terminal	±7 seconds

3.5 Parameters and Ranges of Values

3.5.1 Memory

a.	Word length	17 bits
b.	Velocity resolution required	0.1 feet/second
c.	Maximum velocity capacity	204.7 feet/second
d.	Memory capacity	
	1) Preset event times required	13 words
	2) Radio command storage required	4 words
e.	Time resolution required	1.0 second

3.5.2 Radio Command Information

a.	Velocity increment, resolution required	0.1 feet/second
b.	Maximum velocity increment required	150 feet/second
c.	Polarity	None

3.5.3 Accelerometer

Average accelerometer rate	< 25 pps

3.5.4 Design Restraints

a. Power - The CC&S will be supplied with the following power:

11 ±2 watts
2.4 kc - 26V (RMS) ±3%
Frequency limits ±0.01%
Power factor 0.9 (leading or lagging)
Form factor 1.05
Overload protection at 150% load; in again at 110% load

b. Volume - The CC&S shall be packaged in one-half of a standard case. The maximum dimensions are 6 1/8 x 6 3/16 x 12 inches.

c. Weight - The CC&S shall not weigh more than the value given in the Design Parameter Functional Spec., RA 345-4-120.

d. Wiring - The CC&S shall be electrically isolated from other subsystems by relays, isolation transformers, etc.

3.6 Error Sources and Accuracy Requirements

For reference the resulting errors are given for some of the related tolerances.

Error Source	Required 3σ accuracy	Result max. error
(1) Clock Frequency	0.01%	0.04° pointing
(2) Turn Time Resolution	±0.5 sec	0.12° pointing
(3) Velocity Computation	0.2 f/s max.	7.6 miles miss

(Insert in Spacecraft Design Specification Book)

APPROVED:
SYSTEM: M. R. Mesnard
SUBSYSTEM: Frau Lindemann

JET PROPULSION LABORATORY

Spec. No. RA345-4-430 B
15 May 1962

SUPERSEDES:
RA345-4-430 A
27 October 1961

✻ Denotes Change

FUNCTIONAL SPECIFICATION
RANGER RA345
SPACECRAFT FLIGHT EQUIPMENT
ATTITUDE CONTROL SUBSYSTEM

1.0 SCOPE

This specification describes the functions performed by the RA-3, 4, and 5 spacecraft Attitude Control Subsystem during prelaunch, launch, flight, and preimpact operations. Component and operational specifications are listed for this subsystem during its various modes of operation. Specifications are also listed for components which are used in common with the Midcourse Guidance Subsystem and the Autopilot Subsystem.

2.0 APPLICABLE DOCUMENTS

✻ 2.1 The following documents apply to this specification:

SPECIFICATIONS

Jet Propulsion Laboratory

Spacecraft Design Specification Book,
Ranger RA345

3.0 ATTITUDE CONTROL FUNCTIONAL DESCRIPTION

✱3.1 Introduction

The RA345 Attitude Control Subsystem consists of error detectors (optical sensors), electronic signal circuits, and gas jet control components. The autopilot and midcourse guidance subsystems are interconnected to share attitude control circuits. Figure 3.1-1 shows this relationship in block diagram form; table I explains the operation. Sun and earth sensors determine the spacecraft attitude and generate the error signals to align the spacecraft properly with respect to the Sun and Earth. A switching amplifier circuit is used to establish a limit cycle mode of attitude control. The switching amplifiers control ten valves and reaction jets about the spacecraft pitch, yaw, and roll axes in a cold gas (nitrogen) explusion subsystem.

3.2 Design Objectives

The Attitude Control Subsystem is designed to be adaptable to any programmed lunar trajectory by proper selection of the antenna hinge angles (see hinge axis control portion of block diagram, figure 3.1-1) and operation of the roll and hinge overrides. The roll and hinge override command feature also provides the capability of partially salvaging the mission in the event of gross trajectory errors.

Simplicity has been given a very high priority in the design of the Attitude Control Subsystem to maximize the likelihood of mission success. To achieve simplicity the following restraints have been established:

a. There will be no premaneuver mode. Limit cycle size changes will be made for the pitch and roll control only during commanded turn mode.

b. There will be no signal switching between the autopilot and the cruise attitude control subsystem.

c. The cruise attitude control subsystem need not be turned off during autopilot operation.

d. There will be no extra switching to provide rapid sun acquisition or to provide modified dynamic characteristics for the command turn or autopilot modes. The required dynamic changes will be provided by the same switching function which removes the optical position signal and inserts the gyro position control, and by multiple taps on a single rate plus position network in each gyro loop.

✱3.3 Flight Description and Attitude Control Operation

The flight begins for the Attitude Control Subsystem at spacecraft and Agena separation. The subsystem has completed prelaunch checks before lift-off and at injection only the gyros are activated. The spacecraft is tumbling and will continue until the attitude control subsystem is activated.

Next the solar panels are opened at A+31 minutes (A+48 minutes for RA5) and the tumbling rate slows. (A+0 is time of launch, see RA345-3-110).

The "acquire-sun" command is given by the Central Computer and Sequencer (CC&S) at A+34 minutes (A+51 minutes for RA5). The directional high-gain antenna is extended, the gas jets and sun sensors are activated, and the solar acquisition sequence commences. The spacecraft first eliminates the initial tumbling rates and then, as part of the same process, when the rate feedback voltage drops below that of the saturated position sensors, the vehicle automatically turns to face the Sun. Eliminating the tumbling rates requires a period of 15 minutes maximum and uses less than one-half pound of the 2.64 pound capacity. Turning to face the sun takes 22 minutes maximum.

At A+3 hours, 31 minutes, the CC&S gives the Attitude Control Subsystem the "acquire-earth" command. The command activates the earth sensor and introduces a 3.5 milliradians/second roll rate. The directional high-gain antenna is in the acquisition hinge position following the A+34 minutes command (A+51 minutes for RA5). Within 30 minutes, the Earth enters the field of view of the earth sensor and the Earth is acquired. If the Moon should be acquired first, the roll and/or hinge override commands must be given. The spacecraft then rolls, gives up the Moon and acquires the Earth. The Earth will be acquired within four hours after injection for RA-3, 4, and 5.

The cruise mode is established when the Earth is acquired. In the cruise mode, the spacecraft performs a limit cycle about each axis. The dimensions of the pitch and yaw limit cycles are ±10 microradians/second and ±2.9 milliradians in the cruise mode. The limit cycle dimensions increase to ±5 milliradians in the commanded turn mode. The dimensions of the roll limit cycle are ±14.7 microradians/second and a gradually decreasing angular limit set for ±5 milliradians at nominal midcourse and thereafter. This gradually decreasing angular limit in the roll limit cycle is due to the gradually decreasing angle which the earth subtends. This roll limit cycle is flown in the cruise and maneuver modes all the way to the Moon. The gas consumption required by the limit cycle is approximately 0.03 pounds per axis. Solar pressure may increase the gas consumption about 50 percent.

At approximately 16 hours after launch, the spacecraft performs the midcourse maneuver on receipt of a radio command. The radio command consists of the velocity increment, the roll and pitch turn durations with polarity and the execute command. The CC&S on receipt of the execute command, first commands the Attitude Control Subsystem to switch the roll axis from optical to inertial lock, to connect the roll capacitor, to turn on the autopilot and to withdraw the directional high-gain antenna to the exit angle which is 180° from the nested position. This command switches S2 to position 2 and S3 to position 2 as shown in the block diagram, figure 3.1-I.

Table I. Flight Operations

0. Conditions at Launch:
   A. Gyro Power for motors and torquer amplifiers on.
   B. All other attitude control power off.

1. Sun Acquisition:
   A. Turn on remaining A/C power except to
      1) Earth sensor
      2) Acquisition rate command generator
      3) All autopilot components, and
      4) Midcourse motor shutoff system.

2. Earth Acquisition:
   A. Turn on earth sensor and acquisition rate command generator.

3. Antenna Exit:
   A. Step S3 to position 2 regardless of its prior position.

4. Inertia Lock Any Axis:
   A. Command S1 to position 2.
      Note: With the present sun sensor S1P and S1Y will always operate together.

5. Prepare for Earth Loss:
   A. Reverse Step 2.

6. Command Turn Any Axis:
   A. Turn on calibrated rate command generator in proper direction.
   B. Reverse Step 6A after allotted time.

7. Prepare for Midcourse Motor:
   A. Turn on autopilot and motor shutoff systems.

8. Midcourse Motor Ignite:
   A. Give ignite command simultaneously with 8B and 8C.
   B. Command S5P and S5Y to position 2 simultaneously with steps 8A and 8C.
   C. Open shutoff gates simultaneously with 8A and 8B.

9. Midcourse Motor Shutoff:
   A. Give shutoff command.
   B. Reverse Step 7A after allowing time for shutoff transient.

10. Sun Reacquisition:
    A. Command S1P, S1Y, and S1R to position 1.
    B. Step S3 one position.

11. Earth Reacquisition:
    A. Same as Step 2A.

12. Hinge Override:
    A. Step S3 one position.

13. Roll Override:
    A. Command S2 and S4 to position 1.

14. Threshold Gain (Logic operation, internal):
    A. Pulse S2 and S4 to position 2.

15. Threshold Loss (Logic operations, internal):
    A. Pulse S2 and S4 to position 1.

Switch Operations

S1: Operated solely by the central computer and sequencer (CC&S).

S2: This switch latches in both directions. It is pulsed to position 1 by the threshold crossing detector whenever signal threshold is lost (or when the earth sensor is turned off) and to position 2 whenever threshold is gained providing the earth sensor is turned on). S2 may also be returned to position 1 by the roll over-ride command from the CC&S.

S3: This switch must be in position 1 when sun acquisition power is turned on. The antenna exit command from the CC&S causes S3 to step to position 2 regardless of its prior position. The sun reacquisition command from the CC&S causes S3 to step one position. The hinge over-ride command causes S3 to step one position.

S4: Same as S2.

S5: The ignite command from the CC&S causes S5 to go to position 2.

NOTES:

1. Switches must be in position shown and midcourse shutoff gates must be closed when power is initially turned on.

2. Solid boxes and circles represent control system or other components. Dotted boxes and circles represent vehicle dynamic characteristics.

3. Any mechanization shown is for illustration only and is subject to change by the cognizant engineers without notice.

Table I. Flight Operations

The calibrated roll turn is switched in at this time for the calculated roll duration. This duration as well as the other commanded turn durations are determined on the ground in advance from the tracking data and transmitted prior to the maneuver via the ground command and RF link to the CC&S where it is stored. The polarity of the turn is included in the command. At the conclusion of the roll turn duration, the calibrated command rate generator is switched OFF and the spacecraft remains stationary until the next CC&S command is given.

The next CC&S command in the sequence switches the pitch and yaw axes from optical lock to inertial lock. The pitch and yaw capacitors are connected and a pitch turn is performed in a similar manner to the roll turn. The CC&S commands the start of each turn at a fixed time after the receipt of the execute command. The interval between the start time of the turn allows sufficient time for the maximum turn plus two minutes settling time for the turn transients to die out.

The CC&S next ignites the midcourse motor and for simplicity the coasting Attitude Control Subsystem is left ON. While the gas jets on all three axes are probably on continuously during motor burning, there is no harmful effect. The gas consumed is insignificant, and the perturbations to the thrust vector direction and magnitude are small. The midcourse motor is turned off by CC&S command. The required velocity increment is determined from tracking information on the ground and sent to the spacecraft by ground command via the RF link where it is stored in the CC&S in the form of a required accelerometer count. The pulses of the digital accelerometer are counted and the midcourse motor is shut off when the required count is reached. The autopilot remains ON for the shutoff transients to die out.

The CC&S next turns OFF the midcourse autopilot, jet vane actuators, accelerometer, and shut-off computer. The roll, pitch, and yaw capacitors are switched out, the antenna is repositioned, and solar acquisition is started. Thirty minutes are allowed for solar reacquisition. The CC&S next gives the roll search command for Earth reacquisition. If Earth-Moon ambiguity exists, the roll override command procedure will again be used.

The cruise mode is again established when the Earth is acquired and the Attitude Control Subsystem continues in this mode until the terminal maneuver.

The terminal maneuver is a sequence of single axis turns performed in the order: pitch, yaw, pitch. Again the turn durations are sent to the CC&S in the spacecraft via the RF command loop. On the execute command from the ground, the sun sensors' signals are switched out, the pitch and yaw channel capacitors are connected, and the first pitch turn is started. The roll axis remains in optical lock (earth sensor) with the antenna slaved to the Earth until lunar impact. After the turns, the Attitude Control Subsystem maintains the final spacecraft orientation for photographing the lunar surface and for launching the lunar capsule.

4.0 REQUIREMENTS ON TRAJECTORIES

✱ 4.1 Trajectory Periods

The spacecraft Attitude Control Subsystem design assumes certain trajectory conditions and thus imposes certain restraints on the trajectory and spacecraft design. First, the time periods composing the mission are defined. These time periods are defined relative to launch.

The initial Earth acquisition period is the period of time allotted for initially acquiring the Earth. This time period begins at the "acquire-earth" command, which is set at approximately one hour after the latest time at which the probe enters the sunlight, and it ends at the earliest time at which the range exceeds the minimum range at which satisfactory communication is guaranteed via the omni-directional (low-gain) antenna. These times are taken to mean the worst cases for any trajectory for any of the firing days. For convenience the RA-3, 4, and 5 initial Earth acquisition periods are chosen to be identical. The initial Earth acquisition period begins at 3 hours, 31 minutes after launch and ends at approximately 12 hours after launch.

The midcourse maneuver period begins at the time of the earliest possible midcourse turn command and ends at the time of completion of the latest possible Earth reacquisition. These times are taken to mean the worst cases for any of the firing days. For RA-3, 4, and 5, the midcourse maneuver period begins at approximately 16 hours after launch and ends approximately 44 hours after launch. This period is not determined by attitude control considerations and the numbers are quoted for reference only.

The terminal maneuver period begins at the time of the earliest possible terminal turn command and ends at the time of completion of the latest possible turn command. These times are taken to mean the worst cases for any trajectory for any of the firing days. For RA-3, 4, and 5, the terminal maneuver period begins at approximately 63 hours after launch and ends at approximately 66 hours after launch. This period is not determined by attitude control considerations, and the numbers are quoted for reference only.

✱ 4.2 Trajectory - Spacecraft Angular Restraints

The midcourse and terminal maneuver attitude reference accuracy requirements restrict the earth-probe-sun angle to between 45 and 135 degrees relative to the probe-sun line for the entire midcourse and terminal maneuver periods. This region is shown in figure 4.2-1.

The entire lighted portion of the Earth as seen at the probe must be contained within the conical angular range from 35 to 145 degrees by one-half hour before the end of the initial Earth acquisition period and continuously thereafter. This angle is relative to the probe-sun line with the apex at the probe and is indicated in figure 4.2-1 by the dashed lines. The earth sensor field-of-view constraints dictate this angular limitation.

For each mission there must exist a 45 degree angular conical range (figure 4.2-2) within which the Earth tangent-probe-sun angle will lie for at least one-half hour during the initial Earth acquisition period. This restriction is necessary so that there will be one preset acquisition hinge angle for all firing days. This earth tangent-probe-sun angle must lie in the 45 degree range of values for all trajectories of the mission.

For each mission there must exist a 45 degree conical angular range, relative to the probe-sun line within which the Earth tangent-probe-sun angle will lie during the entire midcourse maneuver period described above. Again the apex of the conical range of values is at the probe and the angular range is for all trajectories of the mission. The reason for this restricted angular range is the necessity to preset one reacquisition hinge angle for all firing days and all trajectories.

Another restriction should be mentioned though it would only apply in case of failure of the roll override command. During the initial Earth acquisition period or the reacquisition, if the roll override command is not available, then the angular range of the moon-probe-sun angle must lie at least 25 degrees outside the 45 degree conical angular ranges mentioned above.

5.0 REQUIREMENTS ON SPACECRAFT DYNAMIC CHARACTERISTICS

5.1 Coordinate System Definition

Before stating the spacecraft configuration and dynamic limitations, the existing spacecraft coordinate system used in all mounting and machining, all dimension, alignments, and the tolerances referred to the spacecraft coordinates is reviewed. This information is given in more detail in the Structural Specification RA345-4-510.

The spacecraft coordinate system is defined on the basis of two reference planes. The primary reference plane is defined by three of the six spacecraft mounting feet; A, C, and E as shown in figure 5.1-1. The secondary reference plane is the mounting plane of the attitude control assembly. This surface is machined perpendicular to the primary reference plane to within 0.005 inches in 20 inches (0.25 milliradians).

The spacecraft coordinate system consists of three mutually perpendicular reference lines: pitch (X), yaw (Y), and roll (Z), which form a conventional cartesian coordinate system. The roll reference line is defined normal to the primary reference plane with +Z aft, and it passes through the center of the basic bolt circle. The yaw reference line is defined parallel to the reference plane with +Y opposite the directional antenna. The pitch reference line is then defined such as to form a right-hand system. The reference lines intersect at the origin. The origin is located such that the primary reference plane becomes station Z = 500. These definitions are shown in figure 5.1-1.

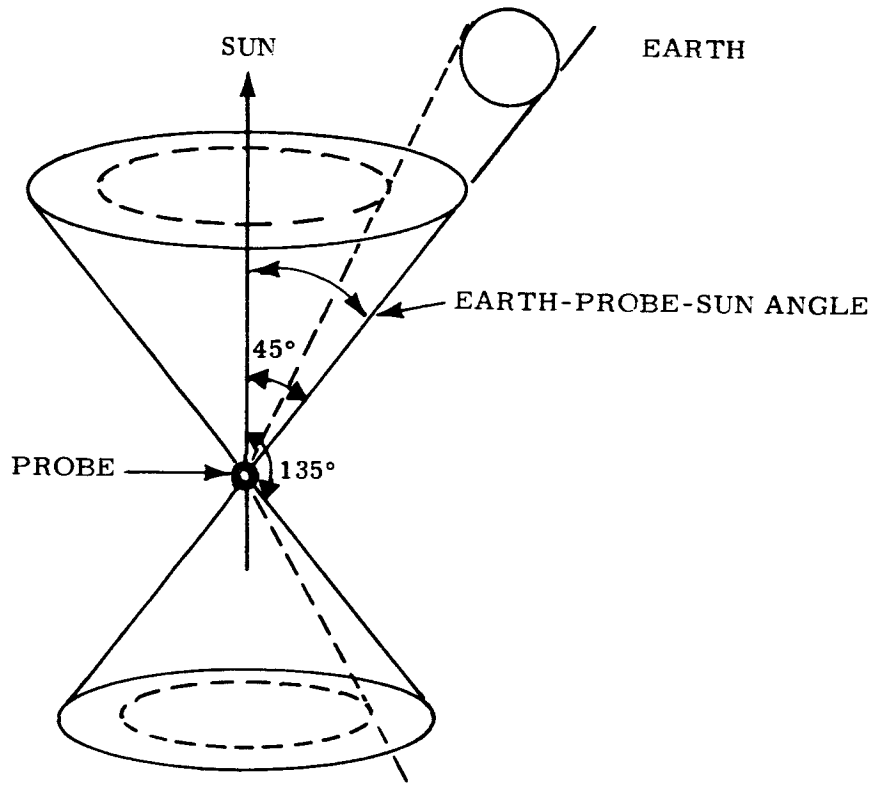

Figure 4.2-1. Definition of Earth-Probe-Sun Angle

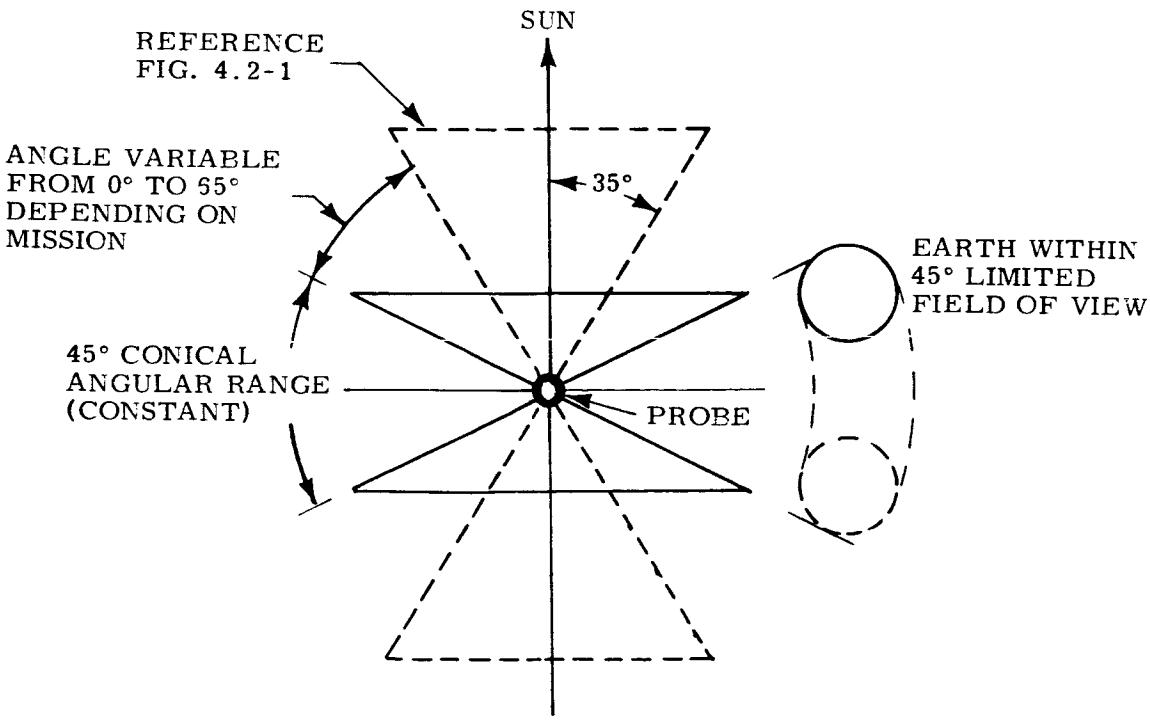

Figure 4.2-2. Definition of Conical Angular Range

Positive pitch, yaw, and roll angles and moments are defined as clockwise when looking from the origin along the positive reference lines. This is a conventional right-hand coordinate system in all respects as shown in figure 5.1-2.

5.2 Dynamic Requirements

The numbers followed by an asterisk are not considered critical and trade-offs are possible. However, any deviation from the specification must be requested.

5.2.1 Spacecraft Configuration Definitions

The specifications are given with reference to the following four possible configurations which the spacecraft has during flight.

(1) Configuration One is the configuration after Agena separation but before opening the solar panels or directional (high-gain) antenna.

(2) Configuration Two is the configuration after opening the solar panels but before the sun acquisition command. The antenna is nested in this configuration.

(3) Configuration Three is the cruise configuration. The solar panels are open and the antenna is at some angle from the nested position.

(4) Configuration Four is the midcourse configuration. The solar panels are open and the antenna is 180 degrees from the nested position.

5.2.2 Location of the Center of Gravity

(1) The CG must be located within 1 inch* of the roll reference line.

(2) The X and Y CG coordinates must be determined to an accuracy of ±0.25 inch maximum for configuration four (midcourse), and 1 inch* maximum for other configurations.

(3) The Z CG coordinate must be determined to a $^{+5\ \text{inch}*}_{-1\ \text{inch}*}$ accuracy. The nominal distance from the CG to the center-of-lift of the jet vanes is 23 inches. This figure is specified by autopilot considerations and is given here for reference.

* Specifications followed by an asterisk are not critical and changes are possible, if deviations to this specification are requested. (See also section 6.0).

5.2.3 Moments of Inertia

The moments of inertia are referred to an axis system with the origin at the CG and with axes parallel to the pitch, yaw, and roll reference lines as defined in the Structural Specification RA345-4-510, and in

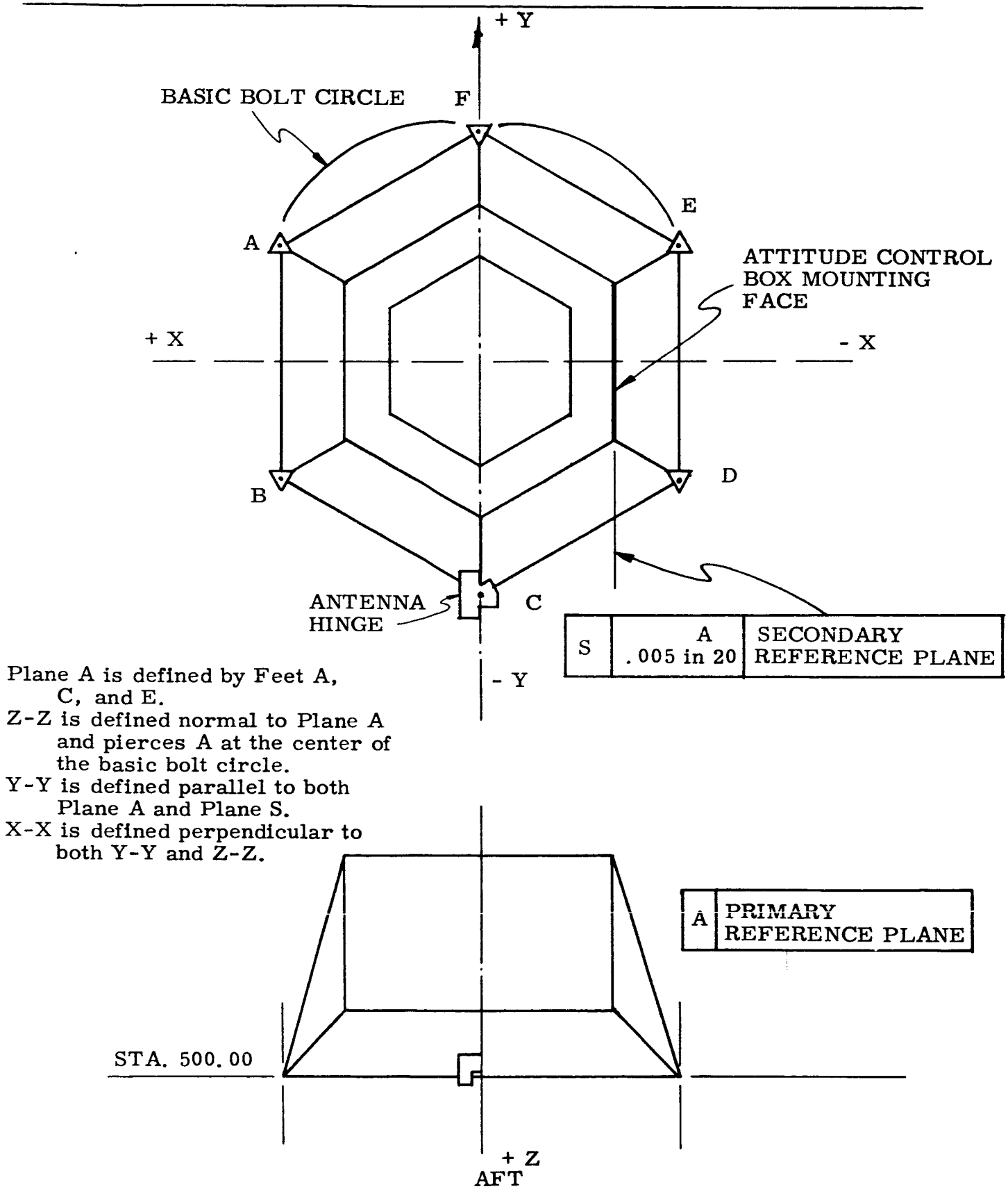

Figure 5.1-1. Spacecraft Reference Planes and Coordinates

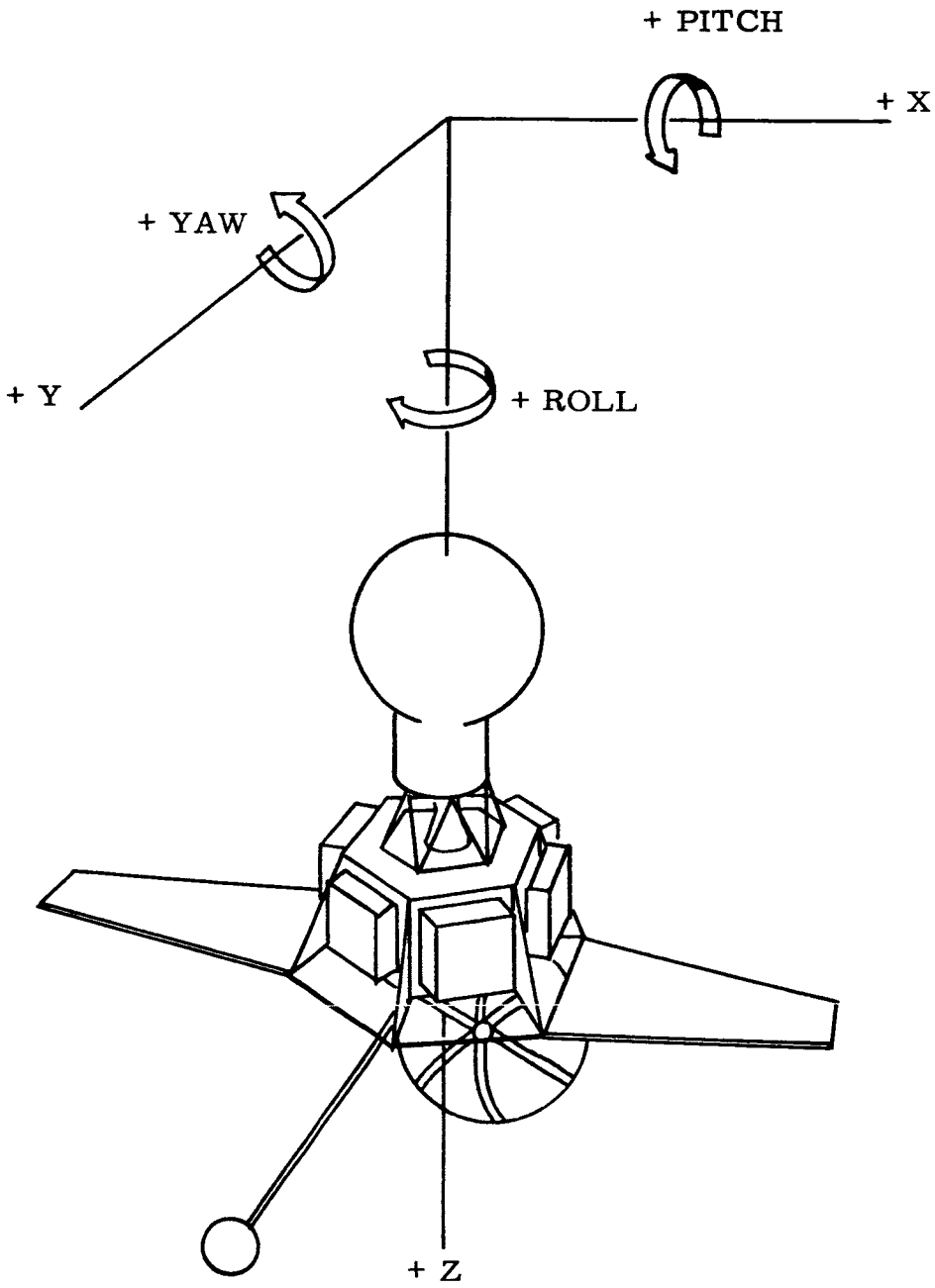

Figure 5. 1-2. Angle and Moment Definition

Section 5. 1 of this specification.

(1) The differences between the moments should be as large as possible for all spacecraft configurations.

(2) The maximum moment of inertia should be about the same axis for configuration one as it is for configuration two.

(3) The three moments of inertia must be determined before flight to an accuracy of ± 10 percent maximum for configurations one, two, and four.

(4) The three differences between the three moments of inertia must be determined before flight to an accuracy of ± 10 percent maximum for configuration one and two.

5. 2. 4 Products of Inertia

The products of inertia are referred to an axis system with the origin at the CG and with axes parallel to the pitch, yaw, and roll reference lines as defined in the Structural Specification RA345-4-510, and in section 5. 1 of this specification.

(1) The three products of inertia must be less than 10 percent of the minimum moment of inertia.

(2) The three products of inertia must be determined before flight to an accuracy of ± 3 percent maximum of the minimum moment of inertia.

6. 0 REQUIREMENTS ON ATTITUDE CONTROL COMPONENTS

In the following specifications, the specified values must be met under all environmental conditions. Tolerances not otherwise marked are maximum values. Again, specifications followed by an asterisk are not critical and tradeoffs are possible. Any deviation from this specification must be requested, however.

The mechanical or component alignment tolerances are relative to the spacecraft reference lines as defined in the Structural Specification, RA 345-4-510, or in section 5. 1 of this specification.

The overall spacecraft pointing requirements are as follows:

(1) Pointing error of roll reference line in cruise . . . . . 8. 7 milliradians -3 σ

(2) Pointing error of antenna axis in cruise . . . . . 5° -3σ

(3) Pointing error of thrust vector in midcourse maneuver . . . 25 milliradians - 3σ

(4) Pointing error of roll reference line in terminal maneuver . . . . . 28 milliradians -3σ .

The various component specifications are determined from these requirements.

6.1 Sun Sensor Specifications

The sun sensor subsystem must have a pointing accuracy of 3.5 milliradians and have a field-of-view over the complete sphere about the spacecraft. The sun sensors, consisting of primary and secondary pairs are interconnected to produce these proper error characteristics. These characteristics must lie within the limitations shown in figure 6.1-1.

To explain items in the following specification tables, the two axes sun sensor orientation is shown. The sun sensor location on the two axes consist of a primary pair located on the bus, and two pairs of sensor elements in each secondary sensor located on the solar panels. The sensor elements on the bus, A, F, G, and L, are located as shown in figure 6.1-2. The secondary sensors consist of four sensor elements connected to operate in pairs and to broaden the field-of-view for acquiring the Sun. This orientation is perhaps best shown by electrical connection of the elements as shown in figure 6.1-3. When the earth sensor acquisition signal is given, the circuit to the secondary sensors is opened and only the primary sensors are used in cruise. The error signal characteristic for such a connection is shown in figure 6.1-1. The tolerances for the sun sensor characteristic are given in table II.

6.2 Earth Sensor Specifications

The earth sensor must have a pointing accuracy of ± 10 milliradians 3 σ in roll, and ± 17.5 milliradians 3 σ in hinge. An asymmetrical device may, therefore, be used. The earth sensor selected in this application consists of three photomultiplier tubes placed in such a configuration to get asymmetric two axis error characteristics. The two axis coordinate system used with the earth sensor is shown in figure 6.2-1. The field-of-view of each sensor element and the orientation is shown in figure 6.2-2. The sensor hood specification is shown in figure 6.2-3.

The outputs from the three sensors are combined as shown in figure 6.2-4 to obtain the error signal characteristics. The photo sensors have a constant sensitivity across the face of the sensor with a linear sloped sensitivity characteristic around the boundaries as shown in figure 6.2-5. The summation signal $\Sigma(A + B + C)$ is used for AGC so that the effective error signals are:

$$\text{Roll Error Signal} = \frac{\Delta(A + B - C)}{\Sigma(A + B + C)}$$

$$\text{Hinge Error Signal} = \frac{\Delta(A - B)}{\Sigma(A + B + C)}$$

The roll error signal is linear ± 22.5 milliradians about the axis saturating at greater angles. The hinge error signal is linear ± 2.5 degrees about the axis, saturating at greater angles. The slope of the hinge error signal and the saturation level varies with the magnitude of the "C term" or the illumination of the "C" sensor as may be seen by the equation. The tolerances for the earth sensor characteristics are given in table III.

The mechanical alignment of the earth sensor tabulated in table III is dependent upon a build-up of mechanical tolerances. Briefly, these tolerances are as follows: the secondary reference plane (see figure 5.1-1) is also parallel to an axis through the base mounting holes at spacecraft supports C and F within 0.005 inch in 10 inches (0.5 milliradian); the antenna hinge axis (at C) will be parallel to the base reference plane to within 0.68 milliradians and perpendicular to the secondary reference plane to 0.68 milliradians; the total mechanical tolerance in each case is 0.88 milliradians to leave 0.20 milliradians for structural and thermal deformations.

The earth sensor mounting surface will be perpendicular to the antenna hinge axis to within 0.36 milliradians. The total mechanical alignment tolerance is 0.58 milliradian leaving 0.22 milliradian for structural and thermal deformations.

6.3 Attitude Control Gyro and Gyro Loop Specifications

The pitch and yaw gyro loops are shown in detail in the block diagram, figure 6.3-1. The tolerances on various items in the loop are given in table IV.

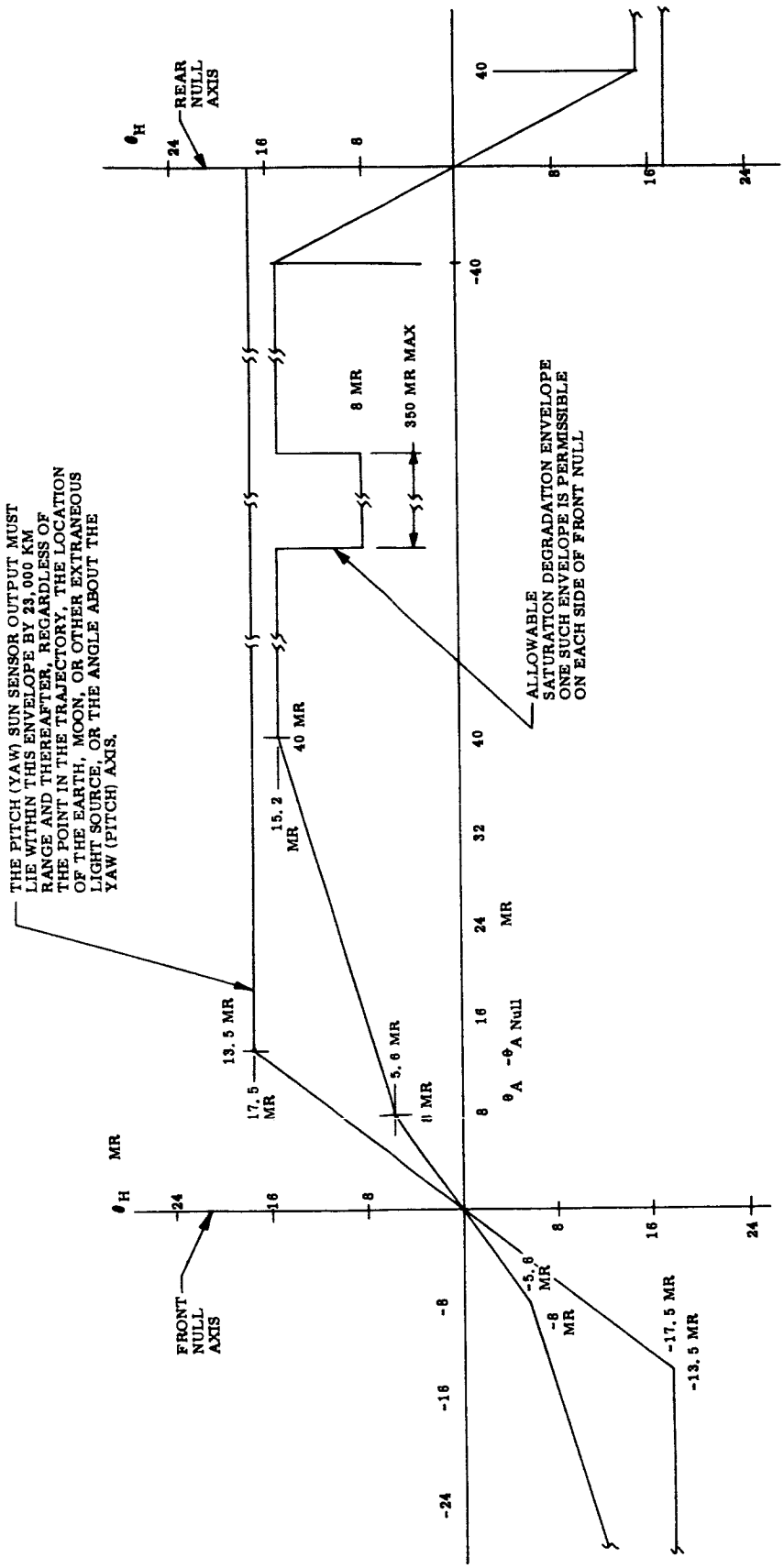

Figure 6.1-1. Sun Sensor Error Characteristic Requirements

Figure 6.1-1. Sun Sensor Error Characteristic Requirements

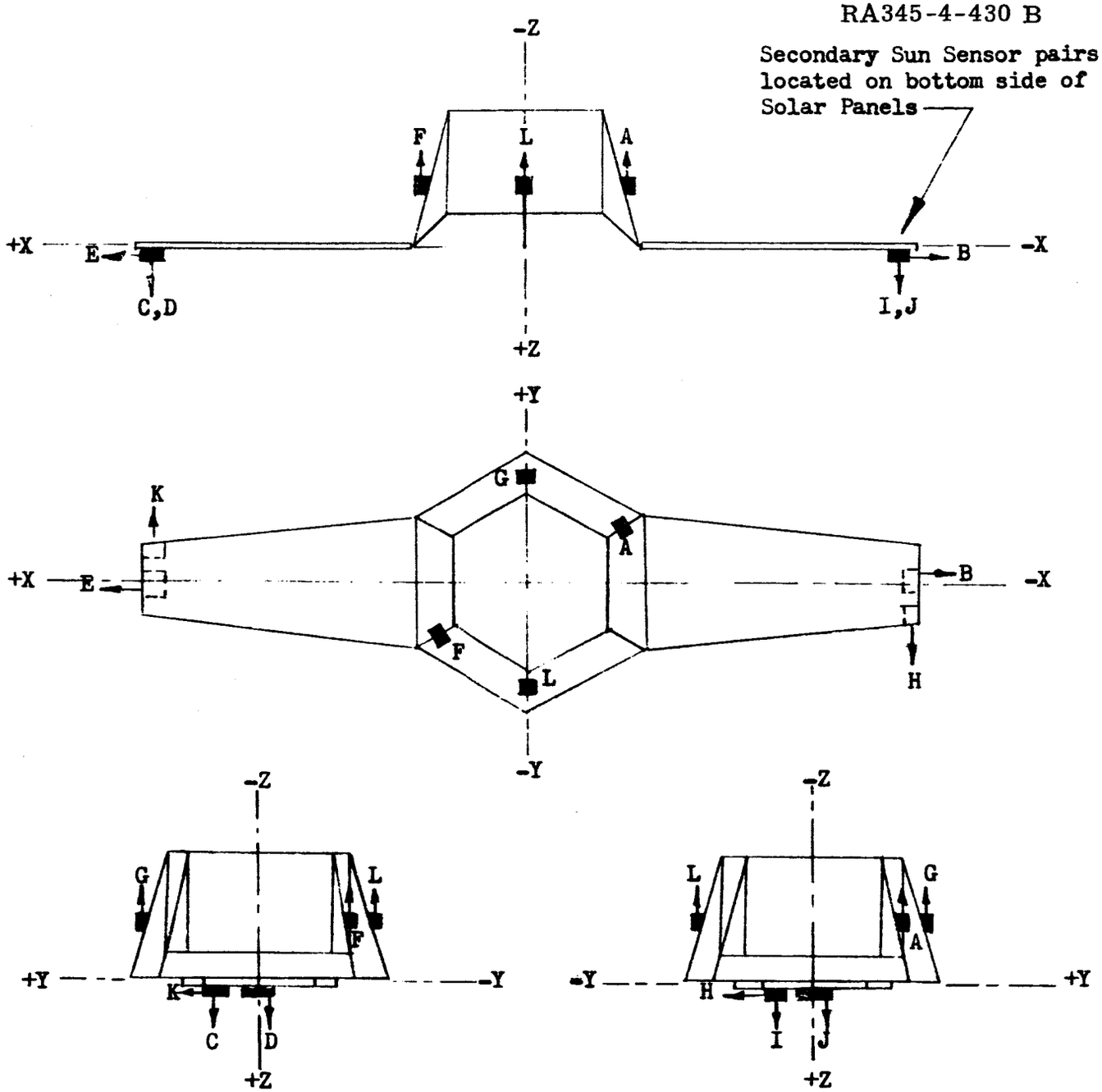

Figure 6.1-2. Sun Sensor Element Orientation

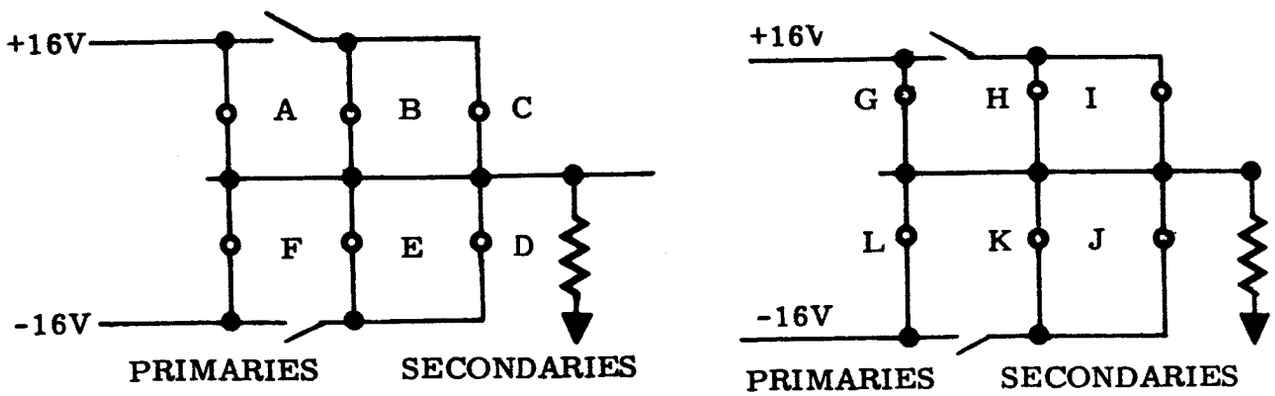

Figure 6.1-3. Sun Sensor Connections

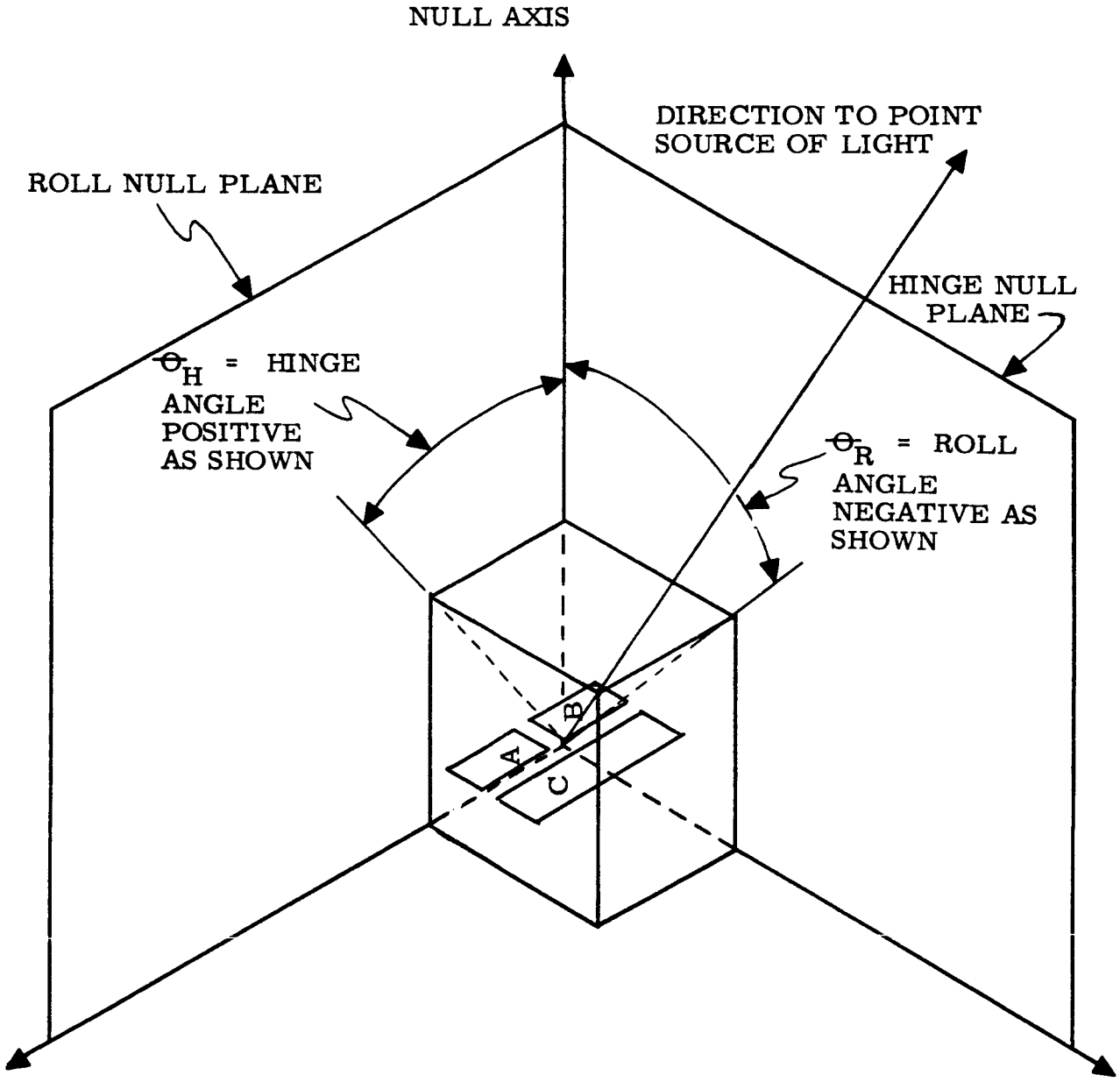

This sketch defines the coordinate system used in the field of view specifications of Figures 6. 2-2 and 6. 2-3.

Figure 6. 2-1. Earth Sensor Error Coordinates

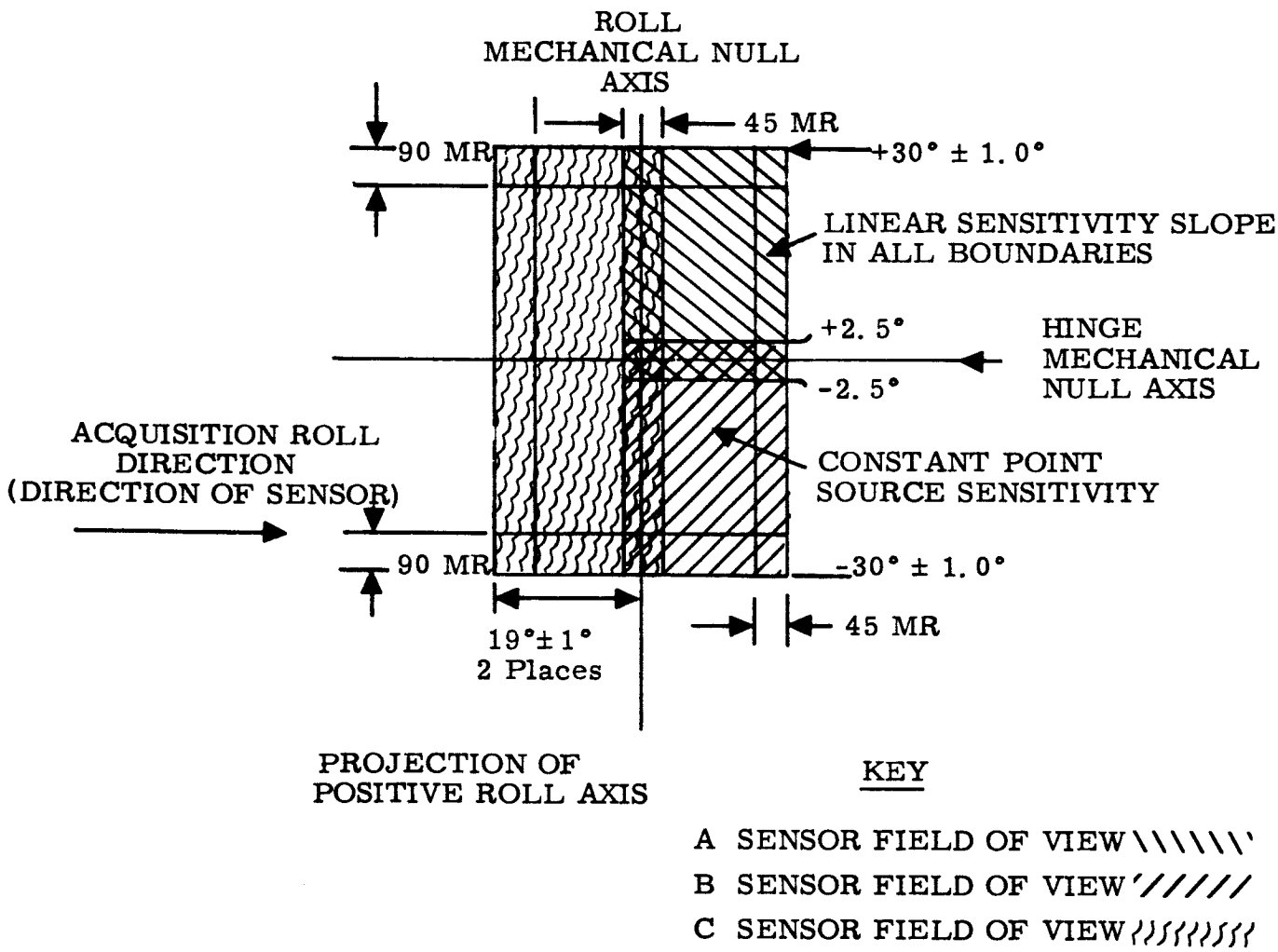

Figure 6.2-2. Earth Sensor Field of View Specifications

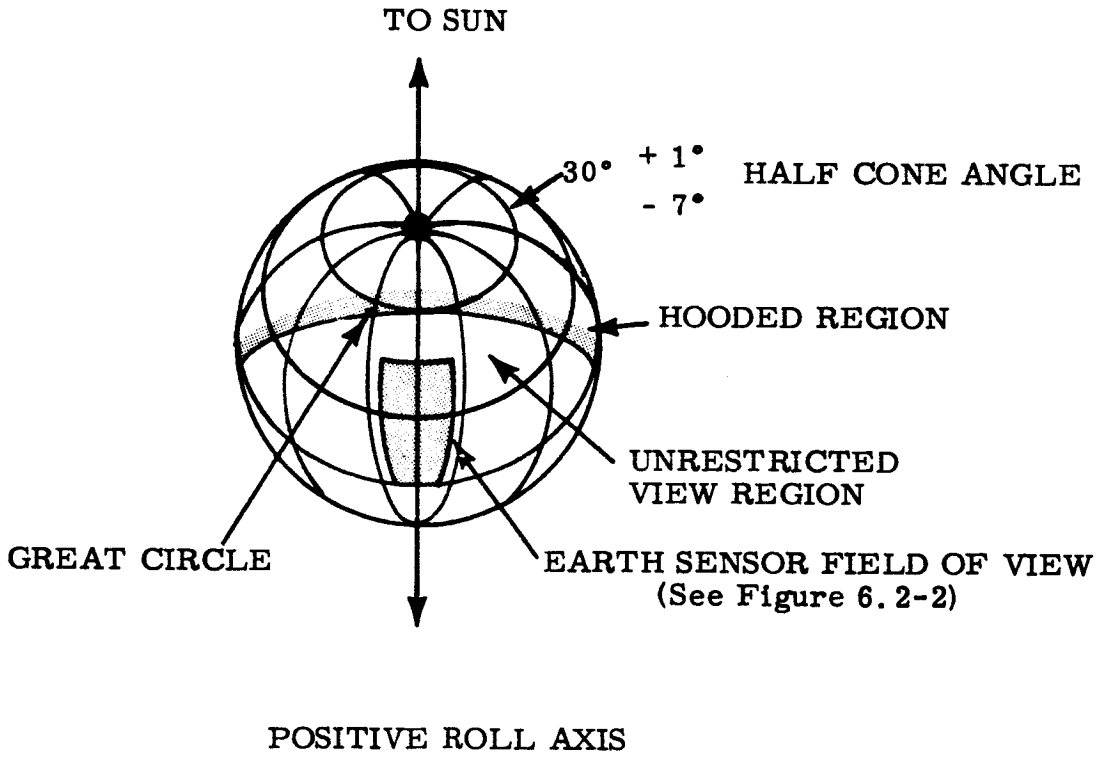

Figure 6.2-3. Earth Sensor Hood Specifications

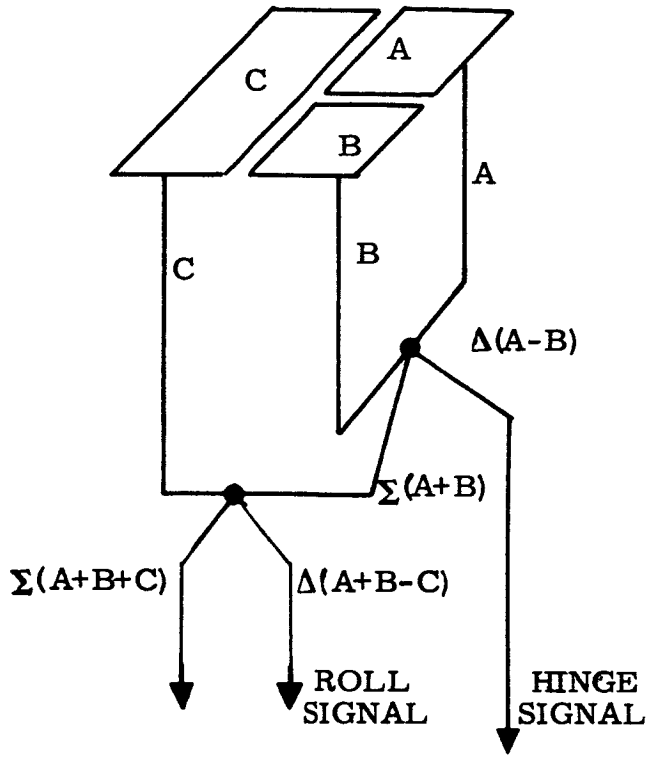

Figure 6.2-4. Earth Sensor Error Signal Logic

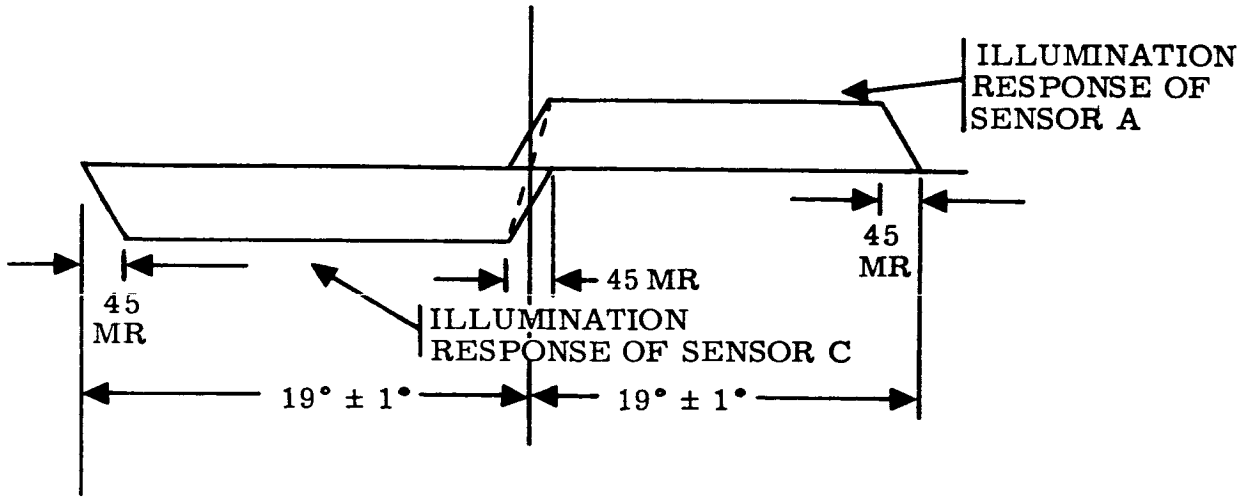

Figure 6.2-5. Earth Sensor Photo-tube Response in Roll (Off Hinge Axis)

Table II. Sun Sensor Characteristics

Quantity	Nominal Value	Tolerance
(1) At midcourse and terminal maneuver		
Mechanical misalignment	Zero	± 2.2 mr 3 σ
Front null electrical offset	Zero	± 2.8 mr 3 σ
(2) Front null electrical offset at other times	Zero	±20 mr*
(3) Rear null electrical offset	Zero	± 20° max.
(4) Linearity	monotonic in the -15 mr to +15 mr range.	± 10% change in slope to ± 2 mr from front null.
(5) Null drift rate	Zero	2 μ r/sec 3 σ
(6) Noise	Zero	0.2 mr peak-to-peak maximum.
(7) Noise slope	1 μ r/sec max. or such that multiple switching at end of limit cycle does not increase design limit cycle velocity.	
(8) Rise time to a step input (5% to 95% of final response)	0.2 sec. max.	
(9) Primary and secondary sun sensor field of view	4π Steradian	Zero (absolute requirement)
(10) Primary sun sensor field of view		
(a) In plane of control (pair)	± 45°	± 5° max.
(b) In plane perpendicular to control plane	± 30°	± 5° max.
(11) Misalignment of null planes to vehicle reference planes	Zero	± 40 mr*
(12) Saturation degradation - See figure 6.1-1. One area of saturation degradation is permissible on each side of front null.		

*Specifications followed by an asterisk are not critical and changes are possible, if deviations to this specification are requested. (See also section 6.0).

Table III. Earth Sensor Characteristics

Quantity	Nominal Value	Tolerance
(1) Roll null offset		
(a) Electrical	Zero	8.0 mr 3 σ
(b) Mechanical misalignment perpendicular to hinge axis	Zero	± 1.73 mr 3 σ
(2) Hinge null offset	Zero	±17.5 mr 3 σ
(3) Linearity		
(a) Roll	Monotonic in -22.5 mr range.	±10% change in slope to ± 2 mr from null.
(b) Hinge	Monotonic in-2.5° to +2.5° range	
(4) Null Drift rate		
(a) Roll	Zero	2 μr/sec 3 σ
(b) Hinge	Zero	2 μr/sec 3 σ
(5) Noise		
(a) Roll	Zero	0.2 mr peak-to-peak max.
(b) Hinge	Zero	1 mr peak-to-peak max.
(6) Noise Slope		
(a) Roll	1 μr/sec max. or such that multiple swotching at end of limit cycle does not increase design limit cycle velocity.	
(7) Rise time to a step input (5% to 95% of final response)		
(a) Roll	0.2 sec max.	
(b) Hinge	0.2 sec max.	
(8) Hinge axis saturation for up to ± 2 mr roll error	28 mr min.	

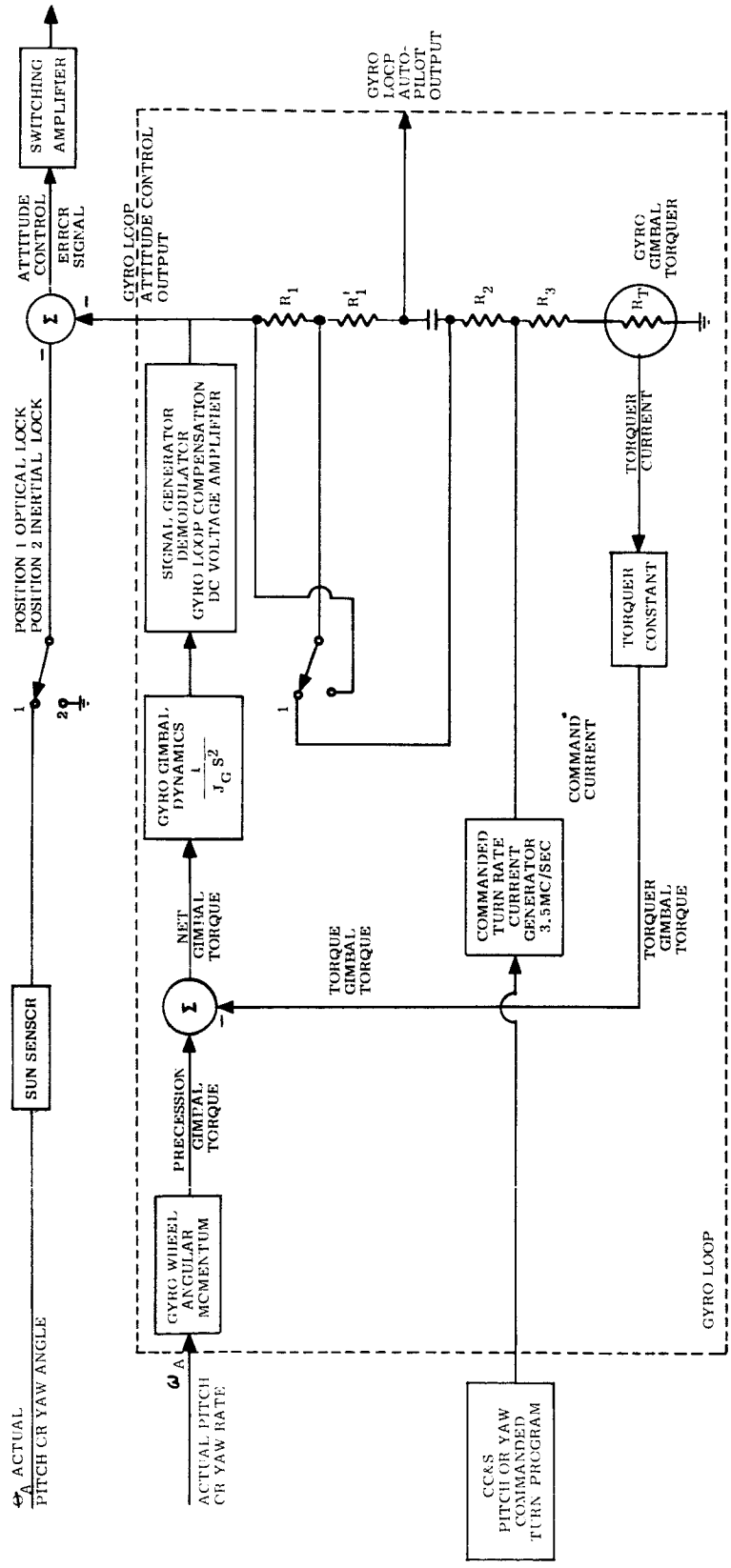

Figure 6.3-1. Gyro Loop Block Diagram

Table IV. Pitch and Yaw Gyro Characteristics

Quantity	Nominal Value	Tolerance
(1) Fixed torque drift after compensation	Zero	4.8 μr/sec 3 σ
(2) (a) Steady state response of spacecraft to turn command	3.5 mr/sec	± 5%
(b) Deviation from calibrated turn response including variations of all components	Zero	±0.3% 3 σ
(3) Gyro Linearity Deviation		
Monotonic over Range ± 10 mr/sec.		
(a) 0 - 0.5 mr/sec	Zero	±4.85 μr/sec max.
(b) 0.5 - 7.0 mr/sec	Zero	±48.5 μr/sec max.
(c) Calibrated point ±0.1 mr/sec	Zero	±1.5 μr/sec max.
(4) Gyro loop angle storage capacitor random leakage	Zero	5.0 mr 3σ for any turn up to 3150 mr
(5) Saturation turning rate	10 mr/sec min.	
(6) Torquing amplifier voltage saturation	53 mr minimum	
(7) Damping ratio (gyro loop)	0.4 minimum	
(8) $\tau_{GA} \cdot K_{\theta}$ Product		
(a) Acquisition and cruise mode pitch and yaw axes	3.2 seconds	± 20%
(b) Acquisition and cruise mode roll axis	5.45 seconds	± 20%
(c) Command turn all axis	5.45 seconds	± 20%

(Cont'd) Table IV. Pitch and Yaw Gyro Characteristics

	Quantity	Nominal Value	Tolerance
(9)	GC	3.82 seconds	± 20%
(10)	Null drift rate	Zero	2 μr/sec (or $2/\tau_{GA}$ μr/sec^2) 3 σ
(11)	Noise	Zero	0.2 mr (or $0.2/\tau_{GA}$ mr/sec) peak-to-peak max.
(12)	Noise Slope	1 μr/sec max or such that multiple switching at end of limit cycle does not increase design limit cycle velocity	
(13)	Rise time (from application until 95% of steady state gyro loop output)	100 m sec max.	
(14)	Pitch gyro misalignment in yaw from all sources	Zero	1.53 mr 3 σ
(15)	Pitch gyro misalignment in roll from all sources	Zero	1.53 mr 3 σ
(16)	Yaw gyro misalignment in roll from all sources	Zero	1.53 mr 3 σ
(17)	Yaw gyro misalignment in pitch from all sources	Zero	1.53 mr 3 σ
(18)	Roll gyro misalignment in pitch from all sources	Zero	1.53 mr 3 σ
(19)	Roll gyro misalignment in yaw from all sources	Zero	1.53 mr 3 σ

6.4 Switching Amplifier Specifications

Terms and symbols used in this specification are shown in the figure 6.4-1 block diagram of the switching amplifier. The specified values and the tolerances are given in table V.

✱ Table V. Switching Amplifier Characteristics

Quantity	Nominal Value	Tolerance
(1) Roll dead zone in acquisition, cruise, and commanded turn:	5.0 mr ±0.5 mr 3 σ	
(2) Pitch and yaw dead zone in acquisition and cruise:	2.9 mr ±0.29 mr	
(3) Pitch and yaw dead zone in commanded turn:	5.0 mr ±0.5 mr 3 σ	
(4) Hysteresis		
(a) Pitch and yaw axis	70 μr	± 50%
(b) Roll axis	160 μr	± 50%
(5) K_θ all axes	1	± 20%
(6) Null offset	Zero	± 1 mr* 3 σ
(7) Null drift rate	Zero	2 μr/sec 3 σ
(8) Noise	Zero	0.2 mr peak-to-peak max.
(9) Noise slope	1 μr/sec. max.	
(10) Rise time (from rapid crossing of switching line to 95% output)	200 millisecond max.	
(11) Fall time (from rapid crossing of switching line to 5% output)	50 millisecond max.	

* Specifications followed by an asterisk are not critical and changes are possible, if deviations to this specification are requested (see also section 6.0).

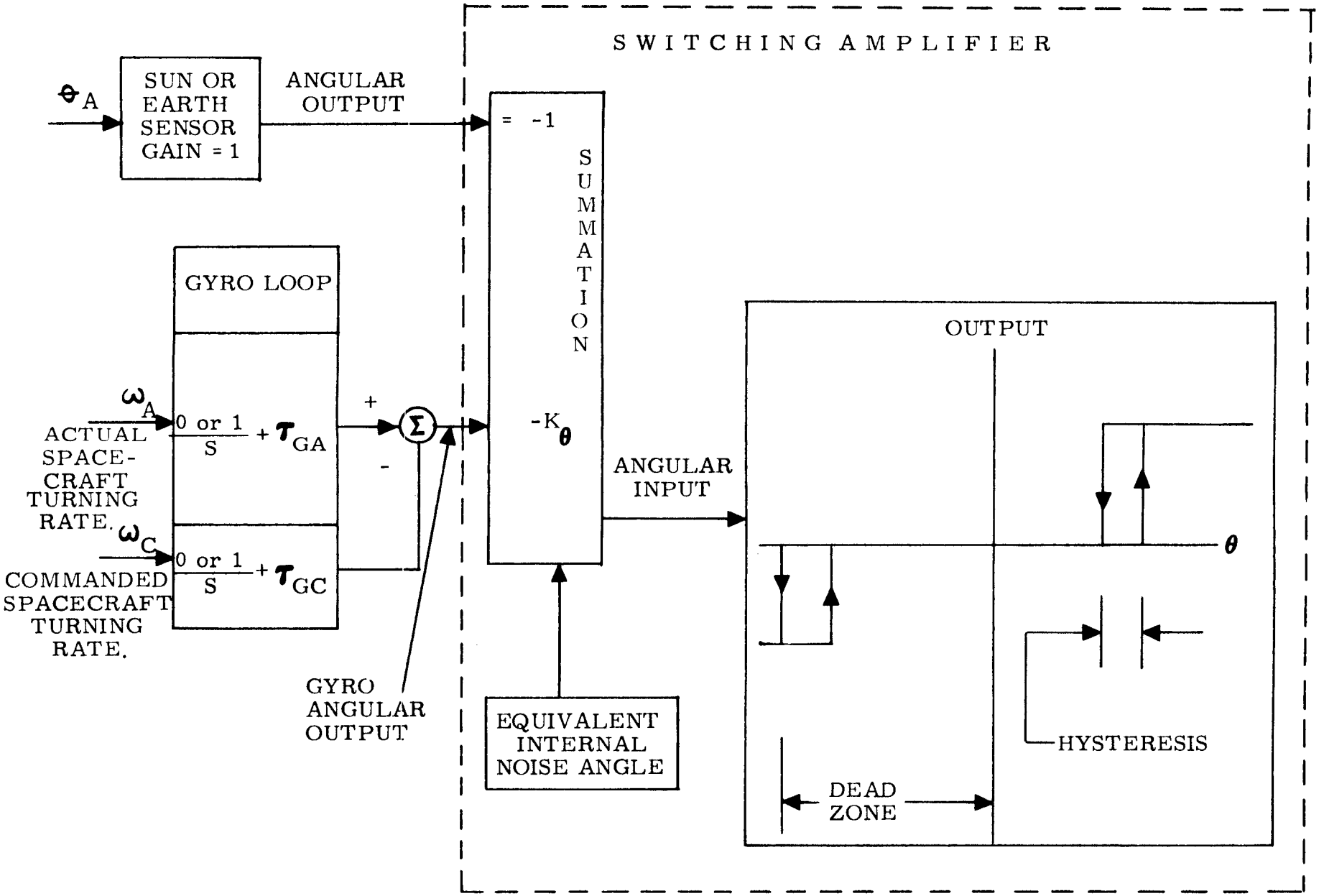

Figure 6.4-1. Switching Amplifier Block Diagram

6.5 Attitude Control Valves and Gas Specifications

The specifications on parameters of the attitude control gas subsystem is given in table VI.

Table VI. Attitude Control Gas Subsystem

Quantity	Nominal Value	Tolerance
(1) Acceleration level each axis		
(a) Steady flow	0.28 mr/sec^2	±20%
(b) Lockup	0.28 mr/sec^2	+50% -20%
(2) Opening time (from receipt of electrical signal to full open)	50 m sec. max.	
(3) Closing time (from loss of electrical signal to full closed)	20 m sec. max.	
(4) Leakage, total for three axes	0.05 lb. /day max.	
(5) Gas capacity	2.64 lb.	
(6) Product of specific impulse and control arm (each axis)	100 ft-sec. min.	
(7) Crosscoupling	0.02 $\frac{mr}{sec^2}$ max.	

6.6 Hinge Servo Specifications

The hinge servo is shown (in block diagram) on figure 3.1-1. The hinge servo shall have a sun-probe-earth hinge angle tracking capability of 22 milliradians maximum. The servo shall position the antenna to the preset angles with an accuracy of ± 3 degrees, maximum. Tolerances associated with the hinge servo operation are given in table VII.

Table VII. Hinge Servo Characteristics

Quantity	Nominal Value	Tolerance
(1) Pointing of pre-set angles	± 3° max.	
(2) Nominal hinge angles	RA3 RA4 RA5	
(a) Acquisition angle	126° 116° **	± 3°
(b) Exit angle	180° 180°	± 3°
(c) Re-acquisition angle	115° 116°	± 3°
(d) Override angle	74° 75°	± 3°
(3) Misalignment of hinge axis in yaw	Zero	2.6 mr 3 σ
(4) Misalignment of hinge axis in roll	Zero	2.6 mr 3 σ
(5) Switch-ON angle	± 20 mr	± 2 mr
(6) Switch-OFF angle	± 10 mr	± 2 mr
(7) Turning rate	5 mr/sec	+ 50% - 0
(8) Turning rate rise time (from receipt of electrical signal to 90% of full turning rate)	10 sec* max.	
(9) Overshoot when shutoff from maximum slewing velocity	10 mr max.	
(10) Drive backlash: must cause less than 0.1 milliradian spacecraft reaction angle		
(11) Switching amplifier noise (referred to input)	Zero	1 mr peak-to-peak maximum
(12) Potentiometer linearity	± 35 mr	

* Specifications followed by an asterisk are not critical and changes are possible, if deviations to this specification are requested (see also sec. 6.0).

** These values have not been established.

The antenna hinge angle switch must operate in a cyclic manner but when the reacquisition command is given, it must return to the reacquisition position regardless of any previous position.

(Insert in Spacecraft Design Specification Book)

APPROVED:
Systems D. Alcorn
Subsystems H. B. Breckenridge

JET PROPULSION LABORATORY

Spec. No. RA345-4-440

3 October 1960

FUNCTIONAL SPECIFICATION

RA-3 MIDCOURSE GUIDANCE SYSTEM

1.0 SCOPE

This functional specification covers the midcourse guidance system for the Ranger RA-3 spacecraft.

2.0 APPLICABLE DOCUMENTS

2.1 The following documents apply to this specification:

DOCUMENTS

Jet Propulsion Laboratory

Spec. No. RA345-3-110	Design Characteristics
Spec. No. RA345-4-410	Central Computer & Sequencer
Spec. No. RA345-4-420	Attitude Control System
Spec. No. RA345-4-470	Midcourse Autopilot

Guidance & Control Technical Memo No. 8 - Section 343, Midcourse Maneuver Error Analysis

3.0 INTRODUCTION

The midcourse guidance system controls the magnitude and direction of the midcourse correction velocity increment. The major portions of the midcourse guidance system are also parts of the attitude control system and the central computer and sequencer (CC&S). The accelerometer and rocket motor are the parts of the system not contained in attitude control or CC&S.

The midcourse correction is made by computing the required turn angles and velocity increment on the ground from radio tracking data, transmitting commands to the spacecraft, performing the two computed turns to orient the rocket motor in the proper direction, and firing the motor to obtain the required velocity.

4.0 FUNCTIONAL DESCRIPTION

The sequence of events in computing and performing the midcourse correction is:

(a) Track the spacecraft to obtain data on the orbit.

(b) On the basis of those data and subject to necessary constraints, compute the midcourse velocity vector necessary to correct for miss at the moon and time of flight errors.

(c) Convert this vector to spacecraft spherical coordinates (roll turn, pitch turn, and velocity magnitude) and then to the radio commands necessary to the performance of this correction.

(d) Transmit the radio commands to the spacecraft where they are stored in the CC&S.

(e) Send a ground command to start the midcourse maneuver subsequence.

(f) Then the commanded turns (roll and pitch) are made.

(g) The motor is ignited and burns until the required velocity magnitude is measured by the accelerometer and its integrator, at which time it is shut off.

(h) The spacecraft then reacquires the sun and earth.

4.1 Command Computation

4.1.1 The spacecraft will come into view of Goldstone a few hours after injection and will be tracked to obtain final data for the orbit determination. The midcourse correction necessary to remove miss and time of flight errors is calculated, subject to necessary constraints on magnitude and direction, for a

chosen motor ignition time.

4.1.2 The velocity vector is calculated in a cartesian coordinate system and must be converted to spacecraft spherical coordinates. The following equations define the spacecraft coordinate system and the coordinate conversions.

$\vec{h}$ = unit vector from spacecraft to sun

$\vec{e}$ = unit vector from spacecraft to earth

$\vec{v}$ = unit vector in the direction of the midcourse velocity increment, ΔV

$\vec{z}_o$ = spacecraft roll axis unit vector = $-\vec{h}$

$\vec{x}_o$ = spacecraft pitch axis unit vector = $\dfrac{\vec{e} \times \vec{h}}{|\vec{e} \times \vec{h}|}$

$\vec{y}_o$ = spacecraft yaw axis unit vector = $\vec{z}_o \times \vec{x}_o$

The rocket motor is mounted so that the thrust is in the negative z direction, so the commanded turns must make $\vec{z}_2$ (z-axis after second turn) = $-\vec{v}$

The first turn is roll and is limited to $\pm 90^o$

$\vec{z}_1 = \vec{z}_o = -\vec{h}$

$\vec{x}_1 = \pm \dfrac{\vec{h} \times \vec{v}}{|\vec{h} \times \vec{v}|}$ ($\pm$ selected so that $\vec{x}_1 \cdot \vec{x}_o \geq o$)

$\vec{y}_1 = \vec{z}_1 \times \vec{x}_1$

roll turn, $\Theta_R = \sin^{-1} (\vec{x}_1 \cdot \vec{y}_o)$

A special case, $\vec{v} = \pm\vec{h}$, gives $\vec{x}_1 = \pm \dfrac{0}{0}$. In this event, $\vec{x}_1 \equiv \vec{x}_o$ and $\Theta_R \equiv 0$

The second turn is pitch and is limited to $\pm 180^o$.

$\vec{z}_2 = -\vec{v}$

$\vec{x}_2 = \vec{x}_1$

$\vec{y}_2 = \vec{z}_2 \times \vec{x}_2 = \vec{x}_1 \times \vec{v}$

pitch turn, $\Theta_p = \sin^{-1}(-\vec{z}_2 \cdot \vec{z}_1) = \sin^{-1}(\vec{v} \cdot \vec{y}_1)$

$$= \cos^{-1}(\vec{z}_2 \cdot \vec{z}_1) = \cos^{-1}(\vec{h} \cdot \vec{v})$$

The magnitude of the velocity increment, ΔV, is the magnitude in the trajectory coordinate system.

$$\Delta V = (\Delta V_x^2 + \Delta V_y^2 + \Delta V_z^2)^{1/2}$$

4.1.3 The calculated turn angles and velocity increment must be converted to a form that is usable by the CC&S.

4.1.3.1 The turn angles must be changed to a turn duration then coded in binary. The turn duration is t_i (i = r (roll), p (pitch))

where $t_i = \frac{\Theta i}{\dot{\Theta}_c}$ ($\dot{\Theta}_c$ = commanded turn rate, 0.2 deg/sec)

The turn duration command is

$$t_{ic} = \frac{t_i - \delta t_{1i}}{\delta t_2}$$

where δt_{1i} = CC&S computation lag (2.5 ms to 200 ms)

δt_2 = command resolution (0.8 second)

This turn duration command, t_{ic}, is rounded off to the nearest unit and converted to binary notation for command transmission. An extra bit is added to the command to indicate the turn polarity.

4.1.3.2 The velocity increment command is

$$\Delta Vc = \left(\frac{\Delta V - \Delta V_{TO}}{\delta V}\right) - 1$$

where ΔV = velocity increment required

ΔV_{TO} = standard tail off velocity

δV = velocity command resolution (0.1 f/s)

1 = CC&S computation lag

The velocity command ΔVc is rounded off to the nearest unit and converted to binary notation for command transmission.

4.1.3.3 The time when the command is sent to start the midcourse subsequence is $Tc = t_1 - t_m - t_T$

where t_1 = midcourse motor ignition time used in calculating the velocity correction

t_m = time from receipt, by the CC&S, of the start midcourse maneuver command to ignition of the midcourse motor (26.5 minutes)

t_T = time delay from start of command transmission to initiation of the midcourse maneuver subsequence.

The command to start the midcourse maneuver must be sent within $\pm$ 20 seconds of Tc. If this is not possible, for any reason, a complete new set of manuever commands based on a later motor ignition time must be sent to the spacecraft and the initiate command sent at the new Tc.

4.2 Midcourse Maneuver Subsequence

4.2.1 At the computed time, Tc, the command is sent to start the midcourse maneuver subsequence. The limit cycles about the probe-sun and probe-earth lines are $\pm$ 1 mr to provide an accurate starting point for the turns to follow. The first turn is a roll turn with pitch and yaw axes still locked on the sun. The second turn is a pitch turn. There is a waiting period of at least 2 minutes following each turn to allow turn transients to stabilize. The detailed sequence of attitude control system events is in RA345-4-420.

4.2.2 At a preset time after receipt of the subsequence start command, the CC&S commands motor ignition and at the same time starts the integration of the spacecraft axial acceleration. The integration is accomplished by counting the number of pulses out of the accelerometer. When the count reaches the required number, a shutoff signal is sent to the rocket motor. When computing the required velocity command the known tailoff characteristics of the motor must be subtracted from the total velocity required, to put that amount of "lead" into the shutoff system.

4.2.3 During unpowered flight the spacecraft attitude control is by gas jets. During powered flight the attitude is controlled by the midcourse autopilot using jet vanes to obtain control torques.

4.3 Accelerometer

The accelerometer used to measure the spacecraft acceleration is a pulse-balanced accelerometer having a pulse train output. Each output pulse represents 0.1 feet/sec of velocity added to the spacecraft. The accelerometer is body fixed with the sensitive axis along the spacecraft z-axis (nominal thrust axis).

The velocity increment computing rate in the CC&S is 25 computations per second so that with uniformly spaced output pulses from the accelerometer there is never more than one pulse per computation. However, the presence of noise makes the output pulses unevenly spaced and may even give two or three pulses at a time (spaced 2.5 ms apart). If triple pulses are the worst case to be expected and the average pulse rate is constant over a short period of time, then computation at 25 computations/second is sufficient. More detailed data on the accelerometer response to expected noise is needed to determine the probability of getting more than 3 pulses per 1/25 second. If this probability is high then the computation rate must be increased.

4.4 Reacquisition

After the midcourse motor is shut off, the reacquisition of sun and earth is commanded by the CC&S. The details of this procedure are found in the attitude control functional specification.

5.0 PARAMETERS AND RANGES OF VALUES

5.1 Command Computation

(a)	Commanded turn rate, $\dot{\Theta}_c$	0.2°/sec
(b)	CC&S turn duration computation lag	
	δt_{1r} (to be determined)	2.5 to 200 ms
	δt_{1p} (to be determined)	2.5 to 200 ms
(c)	Turn duration command resolution, δt_2	0.8 sec
(d)	Standard tail-off velocity, ΔV_{TO}	0.1 ± 0.01 f/s
(e)	Velocity command resolution, δV	0.1 f/s
(f)	Time from maneuver start to ignition, tm	1590 sec
(g)	Command transmission delay, t_T	38 sec
(h)	Tolerance on start command time, Tc	$\pm$ 20 sec

5.2 Commands

(a)	Turn duration, range	0 to 900 sec
	Turn duration, command	11 bits + polarity
	Turn duration, required resolution	1.0 second
(b)	Velocity, range	0 to 204.7 f/s
	Velocity, command	11 bits
	Velocity, required resolution	0.1 f/s

5.3 Accelerometer

(a)	Maximum acceleration	2.5 f/s^2 (25 pps)
(b)	Velocity resolution	0.1 f/s
(c)	Output noise	2-3 pulses @ 400 pps
(d)	Scale factor error	0.6%, 3σ
(e)	Null offset error	7.5×10^{-4} g, 3σ
(f)	Alignment with roll axis	± 20 mr

6.0 ERROR ANALYSIS

The following errors are based on the error equation developed in G&C Technical Memo No. 8, and the latest estimate of the RA-3 component errors. The resulting total error is broken into three parts, 1) pointing errors, 2) proportional velocity errors, and 3) velocity resolution errors.

Each pointing error coefficient is taken to have its maximum value, yielding an upper bound on the total error. All error magnitudes are 3σ or maximum, whichever applies.

(a) Pointing Errors

Error Source	3σ Magn.	Error Coeff.	Error X 10^3	(Error)^2 X 10^6	Units of Variance
Sun sensor null offset, pitch	5.5 mr	1	5.5	30.25	4.88
Sun sensor null offset, yaw	5.5 mr	1	5.5	30.25	4.88
Earth sensor null offset, roll	10.5 mr	1	10.5	110.25	17.80
Limit cycle, pitch	1 mr	1	1	1.00	.16
Limit cycle, roll	1 mr	1	1	1.00	.16
Limit cycle, yaw	1 mr	1	1	1.00	.16
Gyro drift rate, pitch	$7 \cdot 3 \times 10^{-6}$ r/s	900	6.54	42.77	6.90
Gyro drift rate, roll	$7 \cdot 3 \times 10^{-6}$ r/s	820	5.96	35.52	5.73
Gyro drift rate, yaw	$7 \cdot 3 \times 10^{-6}$ r/s	286.5	2.08	4.33	.70
Gyro calibration, pitch	0.3%	π	9.42	88.74	14.33
Gyro calibration, roll	0.3%	$\pi/2$	4.71	22.19	3.58
Pitch gyro alignment in yaw	5 mr	2	10	100.00	16.14
Pitch gyro alignment in roll	5 mr	1	5	25.00	4.04
Turn time resolution, pitch	0.4 sec	$3 \cdot 5 \times 10^{-3}$	1.4	1.96	.32
Turn time resolution, roll	0.4 sec	$3 \cdot 5 \times 10^{-3}$	1.4	1.96	.32
Autopilot error, pitch	7.85 mr	1	7.85	61.62	9.95
Autopilot error, yaw	7.85 mr	1	7.85	61.62	9.95
				619.46	100.00

The 3σ error in thrust vector direction is 24.9 mr = 1.43°

(b) Proportional Velocity Error

Accelerometer, scale factor = 0.6%, 3σ

Accelerometer, null offset = 7.5×10^{-4} g, 3σ

Average acceleration = $\frac{1}{16}$ g

$$\frac{\delta V}{V} = \left[(6 \times 10^{-3})^2 + (16 \times 7.5 \times 10^{-4})^2 \right]^{1/2} = 1.34\%, \ 3\sigma$$

(c) Velocity Resolution = 0.3 f/s maximum

7.0 NOTES

7.1 Reference to particular methods of mechanization is made only to improve clarity of the specification. Mechanization is not within the province of this specification, and mechanization concepts discussed herein are subject to change by the mechanization cognizant engineers without notice.

(Insert in Spacecraft Design Specification Book)

APPROVED:

System: M. R. Mesnard

Subsystem: E. von Linderman

JET PROPULSION LABORATORY

Spec. No. RA 345-4-450 A
15 May 1962

SUPERSEDES:
RA 345-4-450
10 October 1960

FUNCTIONAL SPECIFICATION
RANGER RA-3, RA-4, RA-5 SPACECRAFT
TERMINAL MANEUVER

REVISED & REWRITTEN

---

1. SCOPE

This specification describes the terminal maneuver mathematically, lists pertinent parameters, and tabulates the relative importance of various error sources in making the terminal maneuver. The specification complements the attitude control and central computer and sequencer functional specifications in defining parameter limitations.

2. APPLICABLE DOCUMENTS

2.1 The following documents apply to this specification:

SPECIFICATIONS

Jet Propulsion Laboratory

Spacecraft Design Specification Book,
Ranger A3, A4, and A5

3. TERMINAL MANEUVER

3.1 Introduction

The terminal maneuver is made to align the spacecraft roll axis parallel to the velocity vector of the spacecraft, with respect to the moon, at impact. This alignment allows the vidicon to take pictures of the lunar surface and positions the capsule with the velocity vector for the lunar capsule retro maneuver.

The terminal maneuver sub-sequence is described in detail in the Attitude Control and CC&S functional specifications. Briefly, the maneuver is controlled by the CC&S and the Attitude Control subsystems. After the midcourse maneuver, DSIF tracking is used to redefine the trajectory so that the required spacecraft terminal maneuver turns can be calculated. These turn commands are sent to the spacecraft and are performed starting at the time of the ground execute command.

3.2 Sequence

The sequence of events in computing and performing the terminal maneuver is:

a. Track the spacecraft after the midcourse correction to obtain the corrected trajectory.

b. On the basis of those data, compute the direction of the velocity vector of the spacecraft with respect to the moon at the time of firing the capsule retro rocket.

c. Find the rotational transformation (turn angles) that will orient the roll axis in this direction, keep the high-gain antenna pointed to earth, and convert the angles to the radio time duration commands necessary for the spacecraft to perform the turns.

d. Transmit the radio commands to the spacecraft where they are stored in the CC&S.

e. Send a ground command to start the terminal maneuver sub-sequence and simultaneously initiate the vidicon warm-up.

f. Perform the commanded turns.

g. Deploy the radio altimeter antenna, the omniantenna, the vidicon lens cover, and initiate scientific experiments.

h. Turn on the capsule radio altimeter.

The execute command is sent to start the terminal maneuver sub-sequence at the computed time, T_c. The spacecraft starts the turns from a 3 axis position determined by the limit cycles. The turn order is pitch-yaw-pitch with the roll and antenna hinge axes controlled by the earth sensor.

The last turn is completed at about 4800 km. The CC&S command to stop the last pitch turn also initiates a timer in the Pyrotechnics Subsystem which, after 2 and $2\frac{1}{2}$ minutes respectively, deploys first the vidicon lens cover and the radio altimeter and then the omniantenna boom, which releases the capsule retro-motor heat shield. About 5 minutes is allowed to stabilize the spacecraft motion caused by these movements before obtaining the first mandatory vidicon picture at 4000 km.

At approximately 130 km above the surface of the moon, radio altimeter warm-up is initiated, either by a signal from the CC&S that is timed from the initiation of the terminal maneuver or by a real-time command transmitted from earth. Further information on the terminal maneuver may be found in the Functional Specification Design Characteristics, RA345-3-110.

3.3 Command Computation

It is necessary for the spacecraft to make the three single-axis turns to satisfy the criteria that (1) the high-gain antenna always points toward the earth and (2) the spacecraft roll axis ends up pointing along the velocity vector with respect to the moon. Since the antenna hinge axis is parallel to the spacecraft pitch axis, the following is the required turn sequence:

a. The first turn pitches the spacecraft until the yaw axis is parallel to the antenna line of sight. During the turn, the antenna tracks the earth by motion in the hinge and controls the spacecraft roll axis.

b. The second turn is yaw and therefore about the antenna line of sight, requiring no motion of the antenna with respect to the spacecraft to track the earth.

c. The third turn is pitch again, to align the roll axis along the velocity vector. The antenna tracks the earth as in the first turn.

3.3.1 Spacecraft Turn Angles

The velocity vector is computed in a Cartesian coordinate system. The following equations define the spacecraft axes in that system and give the turn angles.

$\vec{h}$ = unit vector from spacecraft to sun when the first turn is begun (Impact - t_s)

$\vec{e}$ = unit vector from spacecraft to earth at Impact - t_s

$\vec{v}_{pm}$ = unit vector along the velocity vector of the spacecraft with respect to the moon at impact.

$\vec{z}_o$ = initial spacecraft roll axis unit vector = $-\vec{h}$

$\vec{x}_o$ = initial spacecraft pitch axis unit vector = $\dfrac{\vec{e} \times \vec{h}}{|\vec{e} \times \vec{h}|}$

$\vec{y}_o$ = initial spacecraft yaw axis unit vector = $\vec{z}_o \times \vec{x}_o$

Subscripts on $\vec{x}$, $\vec{y}$ and $\vec{z}$ will be 3, 4, and 5 for the spacecraft axes after the first, second, third turns respectively.

Subscripts 1 and 2 are not used to avoid confusion with these same subscripts used in the midcourse maneuver equations.

The first turn is about the pitch axis (x_o - axis) so that

$$\vec{x}_3 = \vec{x}_o ,$$

and ends with the yaw axis parallel to (but opposite) the spacecraft-earth line

$$\vec{y}_3 = -\vec{e} .$$

$$\therefore \vec{z}_3 = \vec{x}_3 \times \vec{y}_3 = \vec{e} \times \vec{x}_o$$

The first pitch turn angle, θ_{x1}, is defined by

$$\sin \theta_{x1} = \vec{y}_3 \cdot \vec{z}_o = \vec{e} \cdot \vec{h}$$

$$\cos \theta_{x1} = \vec{z}_3 \cdot \vec{z}_o = \vec{y}_3 \cdot \vec{y}_o$$

$$\theta_{x1} = 90° - \text{(Earth-probe-sun angle)}$$

The second turn is about the yaw axis (y-axis) so that

$$\vec{y}_4 = \vec{y}_3 = -\vec{e}$$

And ends up with the x-axis perpendicular to the plane formed by $\vec{e}$ and $\vec{v}_{pm}$

$$x_4 = \frac{\vec{v}_{pm} \times \vec{e}}{|\vec{v}_{pm} \times \vec{e}|}$$

$$\vec{z}_4 = \vec{x}_4 \times \vec{y}_4 = \vec{e} \times \vec{x}_4$$

The yaw turn angle, θ_y, is defined by

$$\sin \theta_y = \vec{z}_4 \cdot \vec{x}_3$$

$$\cos \theta_y = \vec{x}_3 \cdot \vec{x}_4 = \vec{z}_3 \cdot \vec{z}_4$$

The third turn is pitch about the x-axis so that

$$\vec{x}_5 = \vec{x}_4$$

and ending with the z-axis (roll) aligned with v_{pm}

$$\vec{z}_5 = \vec{v}_{pm}$$

$$\vec{y}_5 = \vec{z}_5 \times \vec{x}_5$$

The second pitch turn angle, θ_{x2}, is defined by

$$\sin \theta_{x2} = \vec{y}_5 \cdot \vec{z}_4$$
$$\cos \theta_{x2} = \vec{y}_5 \cdot \vec{y}_4 = \vec{z}_5 \cdot \vec{z}_4$$

3.3.2 Spacecraft Turn Durations

The calculated turn angles must be converted to turn duration times which are usable by the CC&S. Also, the time for sending the execute command must be computed.

The turn angles are changed to a turn duration then converted to binary. The turn duration is t_i ($i = x_1, y, x_2$) where

$$t_i = \frac{\theta_i}{\dot{\theta}_c} \quad (\dot{\theta}_c = \text{commanded turn rate, } 0.2 \text{ deg/sec})$$

The turn duration command is

$$t_{ic} = \frac{t_i}{\delta_t}$$

Where δ_t = command resolution (1.0 second)

This command, t_{ic}, is rounded off to the nearest unit and converted to binary notation for command transmission. An extra bit is added to the command to indicate the turn polarity. Binary "1" is used for a positive turn and binary "0" for a negative turn.
The time when the command is sent to start the terminal maneuver sub-sequence is

$$T_c = t_I - t_s - t_T$$

where

t_I = time of lunar impact

t_s = sub-sequence duration from start to lunar impact (65 minutes)

t_T = time delay from start of command transmission to initiation of the terminal maneuver sub-sequence (38 seconds)

The command to start the terminal maneuver must be sent within ±15 seconds of T_c. If this is not possible there can be another try to start the sequence in order to get some vidicon data, but the capsule radio-altimeter turnon must be by a radio command backup if it is to be performed in time for the retro maneuver.

3.3.3 Parameters and Ranges of Values

a.	Commanded turn rate $\dot{\theta}_c$ (the actual calibrated values for each gyro are used in maneuver computation)	0.2 deg/sec nominal
b.	Turn duration command resolution δt	1.0 second
c.	Time from maneuver start to impact, t_s	3900 seconds
d.	Command transmission delay, t_T	38 seconds
e.	Tolerance on start command time, T_c	±15 seconds
f.	Tolerance on altimeter turn-on backup command time	±15 seconds
g.	Turn duration, range	0 to 900 seconds
	, command	11 bits + polarity
	, required resolution	1.0 second

4. ERROR ANALYSIS

4.1 The terminal maneuver will be near nominal. Over the firing window (days) the range of turn angles will be: first pitch, -20° to +20°; yaw, -10° to +10°; and last pitch, -51° ±2°. Error coefficients are taken to have their maximum values within this range of angles, and yield upper bounds on the total error. The error magnitudes used are the latest estimates of the RA-3 component.

Pitch-yaw error is computed by the equation.

$$\text{Pitch-yaw error} = \left[(\text{Pitch error})^2 + (\text{Yaw error})^2\right]^{1/2}$$

The actual 3σ error estimate is dependent upon the maneuver performed. The following table of errors, error coefficients, and units of variance is computed for a typical trajectory. Other trajectories have the effect of changing the 3σ pitch-yaw error estimate by ±1 milliradian.

Error Source	3σ Magnitude	Pitch Error mrad	Yaw Error mrad	Roll Error mrad	Pitch-Yaw Error Coefficient	Pitch-Yaw Error mrad	Pitch-Yaw Units of Variance
1. Roll sensor null offset	8.00 mrad	- 0.89	2.22	-10.14	0.2998	2.39	0.9279
2. Roll sensor misalignment	1.73 mrad	- 0.21	0.49	- 2.21	0.3140	0.54	0.0476
3. Null offset of roll switching amplifier	1.00 mrad	- 0.13	0.29	- 1.29	0.3283	0.32	0.0174
4. Pitch sensor null offset	2.50 mrad	- 2.53	0.02	- 0.02	1.0139	2.53	1.0358
5. Initial pitch dead zone position	5.00 mrad	- 5.03	0.02	- 0.02	1.0073	5.03	4.0896
6. Null offset of pitch switching amplifier	1.00 mrad	- 2.03	0.02	- 0.02	2.0345	2.03	0.6673
7. Yaw sensor null offset	2.50 mrad	0.13	- 2.41	- 0.57	0.9664	2.41	0.9411
8. Initial yaw dead zone position	5.00 mrad	0.30	- 4.84	- 1.11	0.9714	4.85	3.8036
9. Null offset of yaw switching amplifier	1.00 mrad	0.09	- 1.92	- 0.46	1.9278	1.92	0.5992
10. Pitch gyro drift	4.85×10^{-3} mrad/sec	-18.96	0.02	- 0.03	3909.6577	18.96	57.9618
11. Turn calibration-pitch	0.30 percent	- 0.68	0.02	- 0.02	0.2280	0.68	0.0755
12. Capacitor leakage-pitch	5.00 mrad	- 0.03	0.02	- 0.02	0.0079	0.03	0.0003
13. First pitch turn command time resolution	0.40 sec	1.36	0.02	- 0.02	0.0034	1.36	0.3018
14. Second pitch turn command time resolution	0.40 sec	1.36	0.02	- 0.02	0.0034	1.36	0.3020
15. Yaw gyro drift	4.85×10^{-3} mrad/sec	- 0.02	10.94	- 3.86	2256.9042	10.94	19.3148
16. Turn calibration-yaw	0.30 percent	- 0.03	- 0.17	- 0.28	0.0589	0.17	0.0050
17. Capacitor leakage-yaw	5.00 mrad	- 0.02	3.10	3.91	0.6200	3.10	1.5496
18. Yaw turn command time resolution	0.40 sec	- 0.03	0.88	1.07	0.0022	0.88	0.1262
19. Pitch gyro misalignment in roll	1.53 mrad	0.13	0.02	- 0.03	0.0872	0.13	0.0029
20. Yaw gyro misalignment in roll	1.53 mrad	0.00	- 0.27	- 0.40	0.1775	0.27	0.0119
21. Misalignment roll sensor hinge in yaw	2.60 mrad	- 0.03	- 0.50	2.63	0.1929	0.50	0.0406
22. Misalignment roll sensor hinge in roll	2.60 mrad	- 0.31	0.51	- 1.97	0.2316	0.60	0.0585
23. Final position in the pitch dead zone	5.00 mrad	4.97	0.02	- 0.02	0.9942	4.97	3.9841
24. Final position in the yaw dead zone	5.00 mrad	- 0.03	5.02	- 0.02	1.0045	5.02	4.0668
25. Final position in the roll dead zone	5.00 mrad	- 0.03	0.02	4.97	0.0079	0.03	0.0003
26. Asymmetrical albedo of reference body	2.10 mrad	- 0.25	0.60	- 2.68	0.3106	0.65	0.0686

3σ Pitch error = 20.63 mrad
3σ Yaw error = 13.95 mrad
3σ Roll error = 13.65 mrad
3σ Pitch-Yaw error = 24.90 mrad

(Insert in Spacecraft Design Specification Book)

APPROVED:

System: M. R. Mesnard

Subsystem: Evan Linderman

JET PROPULSION LABORATORY

Spec. No. RA 345-4-460 C
27 July 1962

SUPERSEDES:
RA 345-4-460 B
22 February 1962

FUNCTIONAL SPECIFICATION
RANGER RA-3, 4 AND 5 SPACECRAFT
POWER SUBSYSTEM

* DENOTES CHANGE

---

* 1. SCOPE

This functional specification contains the requirements of the RA-345 Power Subsystem, including the solar source, battery source, and the conversion and distribution system for prelaunch, launch, and flight.

2. APPLICABLE DOCUMENTS

2.1 The following documents apply to this functional specification:

SPECIFICATIONS

Jet Propulsion Laboratory

Spacecraft Design Specification Book, Ranger 345

DRAWINGS

Jet Propulsion Laboratory

5-100 779 RA 345, Power System Block Diagram

3. POWER SUBSYSTEM FUNCTIONAL DESCRIPTION

* 3.1 Introduction

The RA-345 Power Subsystem consists of a solar panel source, a battery source, and the converter and distribution equipment to power the spacecraft during prelaunch, launch, and flight. The various components of the power subsystem are shown in Figure 3.1-1. The voltage outputs, required regulation and noise constraints are listed. The power requirements during launch, cruise, midcourse maneuver, and terminal manuever are shown in Figures 4.6-1, 4.9-1, 4.11-1, 4.12-1, and 4.13-1. Power levels are indicated in Figure 3.1-2 and Table 3.1-1.

The RA-345 Power Subsystem is similar to the RA-1 and 2 Power System. The following units will be very similar to their RA-1 and 2 counterpart: 400 cps (3ϕ), 400 cps (1ϕ), Communication, Power Switching and Logic. The Data Encoder Converter, Scientific Inverter, Attitude Control Converter DC, Power Synchronizing Supply, will be expansions of RA-1 and 2 packages. The Command Converter and CC&S Inverter will be new additions, although the CC&S Inverter will be quite similar to the Scientific Inverter. Also the RA-1 and 2 Booster Regulator has been redesigned for increased reliability and power. The Instrumentation Gyros and their 400 cps Inverter and the Quarter-Watt Transmitter System, originally listed for the RA-345 spacecraft, have been completely eliminated.

The RA-345 power subsystem will contain two Solar Panels, identical to the two panels for RA-1 and 2.

The primary battery for the RA-345 mission can supply power for the post launch period, the midcourse maneuver period, and the terminal maneuver period. Also, it can supply power for two meteoric perturbation (contingency) manuever periods.

The over-all power requirements are shown on the attached Master Power Consumption Charts. The power sequence is provided in the attached RA-345 Power Sequence Chart.

4. FUNCTIONAL REQUIREMENTS OF THE POWER SUBSYSTEM COMPONENTS

* 4.1 Solar Panels

The minimum raw power capability of the solar panels is 142 watts at 25.0 volts ±1.0 volt.

* 4.2 Battery

Requirements for the battery are as follows:

a.	Type:	Ag-Zn (Silver-Zinc)
b.	Weight:	As specified in RA 345-4-120
c.	Volume:	380 cu inches
d.	Amp-Hrs:	45 A-H
e.	Temp. Range:	50° F (10° C) to 130° F (54° C)
f.	Voltage Range:	20.0 volts to 26.5 (Prelaunch) 20.0 volts to 23.5 (After launch period) 20.0 volts to 27.3 (When charging)

4.3 Power Switching and Logic

4.3.1 The Power Switching and Logic will have provision for supplying ground power to the power system and switching by external command to internal power. It will also provide switching between Solar Panels and Primary Battery with the capability of the battery absorbing any short term loads which might exceed the solar panel output capacity. The Power Switching and Logic will supply the proper output for the Booster Regulator operation.

4.4 Booster Regulator

The Booster Regulator will receive the output of the Power Switching and Logic and supply 31.5 vdc ±1 percent and -9 vdc bias for operation of the various converters. When in subsystem operation the booster regulator output shall have noise levels less than those shown in Table 4.4-1.

4.5 Power Synchronizing Supply

The Power Synchronizing Supply will receive 38.4 kc from the CC&S and by means of frequency dividers provide the proper synchronization for the various flux oscillators and also provide synchronization for the single phase and three phase 400 cps system.

4.6 Attitude Control DC Converter

The Attitude Control (A/C) - DC Converter will supply the DC power for the A/C system as shown in Figure 4.6-1. System noise levels will be less than those shown in Table 4.4-1.

4.7 400 cps, 1-Ø Inverter

The 400 cps, 1-Ø Inverter will supply single phase 400 cps power for the antenna servo as shown on the attached Attitude Control Power Profile, Figure 4.6-1. Operating characteristics are shown in Table 4.4-1.

4.8 400 cps, 3-ϕ Inverter

The 400 cps, 3-ϕ Inverter will supply three phase 400 cps power for the A/C system gyros as shown on the attached Attitude Control Power Profile, Figure 4.6-1. Operating characteristics are shown in Table 4.4-1.

4.9 Command Converter

The Command Converter will supply the DC power for the Command Decoder system as indicated in Figure 4.9-1. System noise levels will be less than those shown in Table 4.4-1.

4.10 CC&S Inverter

The CC&S Inverter will supply 2.4 kc power for the CC&S T-R unit as shown in Figure 4.9-1. Operating characteristics are shown in Table 4.4-1.

4.11 Data Encoder Converter

The Data Encoder Converter will supply the DC power for the Data Encoder as shown in Figure 4.11-1. System noise levels will be less than those shown in Table 4.4-1.

* 4.12 Scientific Inverter

Shown on JPL Drawing 5-100 779, the gamma-ray spectrometer HV supply receives its input directly from the 31.5 vdc bus. The output of the 2.4 kc inverter supplies power for the remainder of the Gamma Ray power system and also power for the Vidicon T-R unit. Switching will be provided as shown on the Block Diagram to initiate power as shown in Figure 4.12-1 by means of CC&S and command system signals. Operating characteristics are shown in Table 4.4-1.

4.13 Communications Converter

The Communications Converter will supply DC power to the Communications system as shown in Figure 4.13-1. Switching must be provided to initiate transfer from +150 vdc to +250 vdc at A + 23 minutes by means of CC&S command. System noise levels will be less than those shown in Table 4.4-1.

4.14 Thermal Control

There is no requirement for thermal control power.

5. SYSTEM RESTRAINTS

* 5.1 The following restraints are placed upon the spacecraft by the power system:

a. Battery temperature range from 10 to 54° C

b. Total regulated power available from solar panels = 108 watts

c. The described battery will be capable of providing power for the initial acquisition, midcourse maneuver, and terminal maneuver phases as well as the equivalent of two additional midcourse maneuvers, to be used for possible spacecraft meteoric perturbations or other contingencies.

6. NOTES

6.1 Reference to particular methods of mechanization is made only to improve clarity of the specification and mechanization concepts discussed herein are subject to change by the mechanization cognizant engineers without notice.

Table 3.1-1 POWER SEQUENCE CHART

Time	Power Source	Load Sequence (regulated watts)	
Liftoff -5 mins.	Switch to internal power (Battery)	Initial load consists of: Power Sync . . . . . 6.3 Attitude Control . . . . . 32.0 Communication . . . . . 20.3 Date Encoder . . . . . 12.5 C.C. & S. . . . . 12.8 Command . . . . . 4.0 Science . . . . . 0.6 Total 88.5	
+23 mins. Transmitter power up	Battery	+3.40	91.9
+34 mins. Start Sun acquisition. Move antenna to pre-set position (1)	Battery	+13.1	105.0
+37 mins. Antenna at pre-set position (draws 0.1W in steady state) (2)	Battery	-2	103.0
+64 mins. Sun acquisition complete	Solar Panels	-11	92.0
+3.5 hours Earth acquisition starts	Solar Panels	+11	103.0
+4.0 hours Earth acquisition complete, gamma-ray ON	Solar Panels	-6.1	96.9
+16 hours Mid-course maneuver starts; autopilot and attitude control ON; antenna slews	Battery	+23.1	120.0
+16.2 hours Antenna stops	Battery	-2	118.0
+16.45 hours Start sun acquisition autopilot OFF, antenna ON	Battery	-6	112.0

Table 3.1-1 POWER SEQUENCE CHART (Continued)

Time	Power Source	Load Sequence (regulated watts)	
+16.5 hours antenna OFF	Battery	-2	110.0
+16.97 hours Sun acquisition complete; earth acquisition starts	Solar Panels	-2	108.0
+17.2 hours Earth acquisition complete, antenna stops	Solar Panels	-11.0	97.0
+65.1 hours Terminal maneuver starts; attitude control ON; antenna slews; vidicon ON	Battery	+9.0 +5.8	111.8
+65.2 hours Antenna stops	Battery	-2	109.8
+65.4 hours Antenna slews	Battery	+2	111.8
+65.5 hours Antenna stops; attitude control OFF (This situation continues to impact)	Battery	-2 -9.0	100.8
+66.2 hours (Nominal) Impact			

NOTE: This table does not reflect any usage for switching pulses.

(1) + 48 mins. for RA-5

(2) + 51 mins. for RA-5

Table 4.4-1 RA-345 NOISE LEVEL DATA FOR OPERATION IN SPACECRAFT SYSTEM

Power Module	DC Voltage Output	Noise Spec. Levels	
		Ripple (P-P)	Spikes (P-P)
4A2 (Booster Regulator)	+31.5V -9V	500MV 150MV	500MV 150MV
4A3 (A/C DC)	±26V ±35V +20V	26MV 35MV 20MV	100MV 100MV 50MV
4A4 (Comm.)	±20V +5.75V +150V +250/150V	100MV 500MV 1.5V 2.5V/1.5V	150MV 500MV 2.0V 3V/2V
4A5 (C/D)	±6V +28V (C) +28V (D)	300MV 800MV 500MV	300MV 800MV 500MV
4A7 (DE)	±20V ±6V +28V	200MV 60MV 280MV	200MV 60MV 2.0V
4A8 (SCI.)	+31.5V	630MV	730MV

RA-345 AC VOLTAGE INVERTERS*

Module	AC Voltage Output	Voltage		Voltage ABS. Limit	Typical Measured Levels In System Levels
		(P-P)	(RMS)		
4A6 (CC&S)	26V (SQ.)	52V	26V	± 3%	53V (P-P) (SQ. WAVE)
4A8 (SCI.)	26V (SQ.)	52V	26V	±1.5%	**53V (P-P) (SQ. WAVE)
4A13 (A/C 1 ϕ)	26V (SINE)	80V	26V	±10%	80V (P-P) (SINE WAVE)
4A14 (A/C 3 ϕ)	26V (SINE)	80V	26V	+18,-12%	80V (P-P) (SINE WAVE)

*NOTE: When operating in a spacecraft system, inverters will not generate noise detrimental to the operation of any subsystem.

**SCI. Inv. output adjusted to provide desired level from user's T-R Unit.

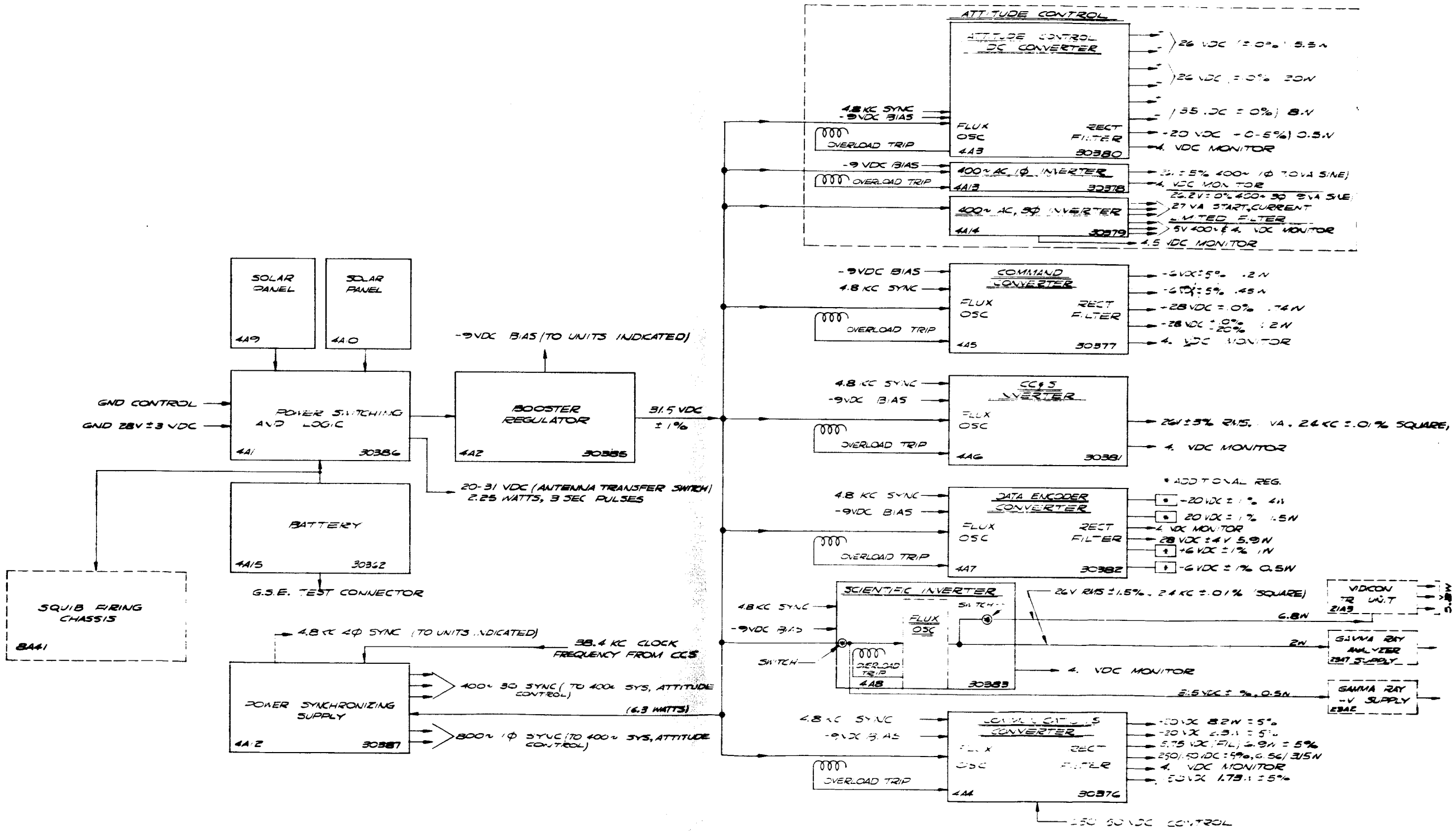

* Figure 3.1-1. Block Diagram

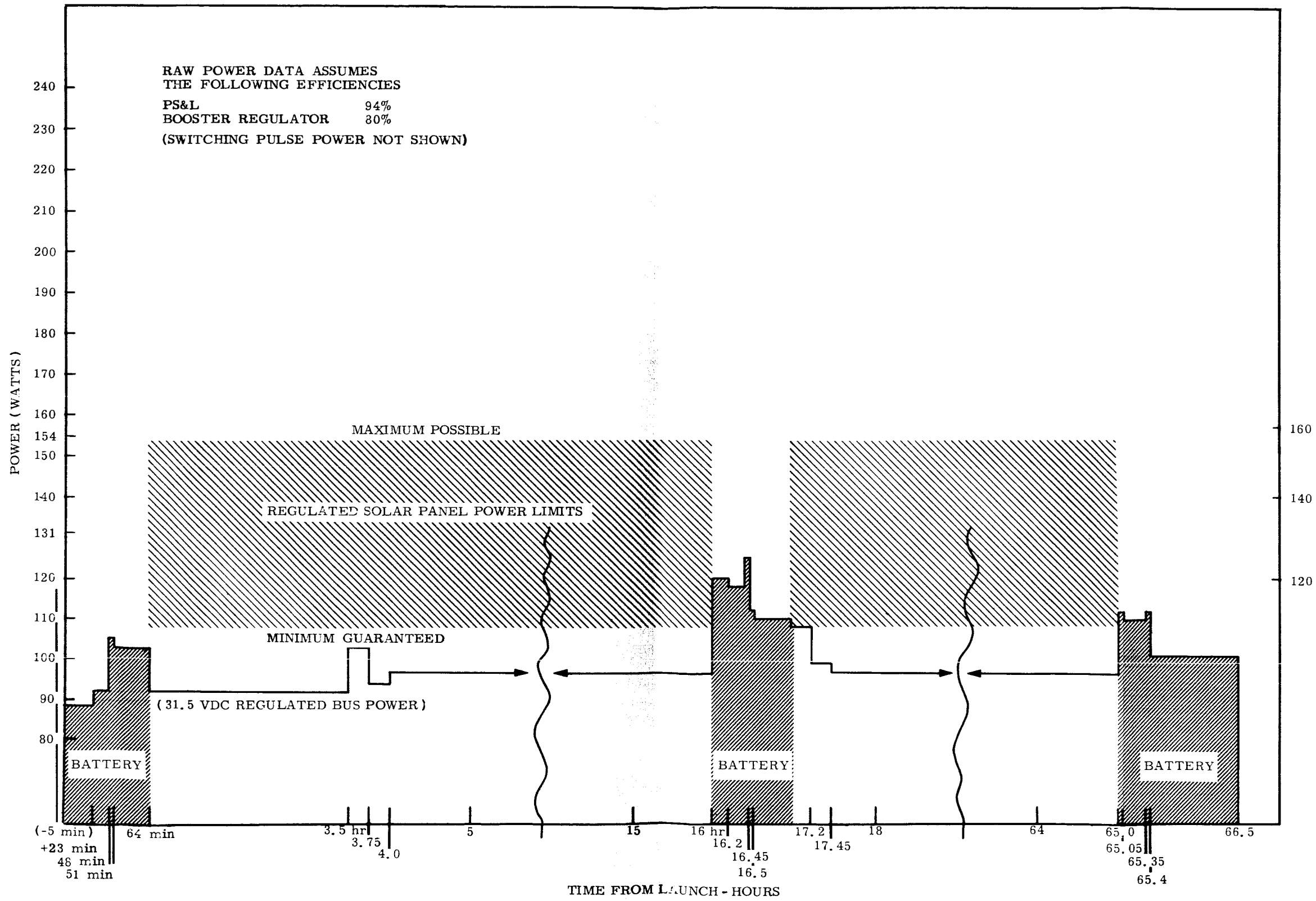

Figure 3.1-2. RA-3, 4, & 5 Regulated Power Consumption

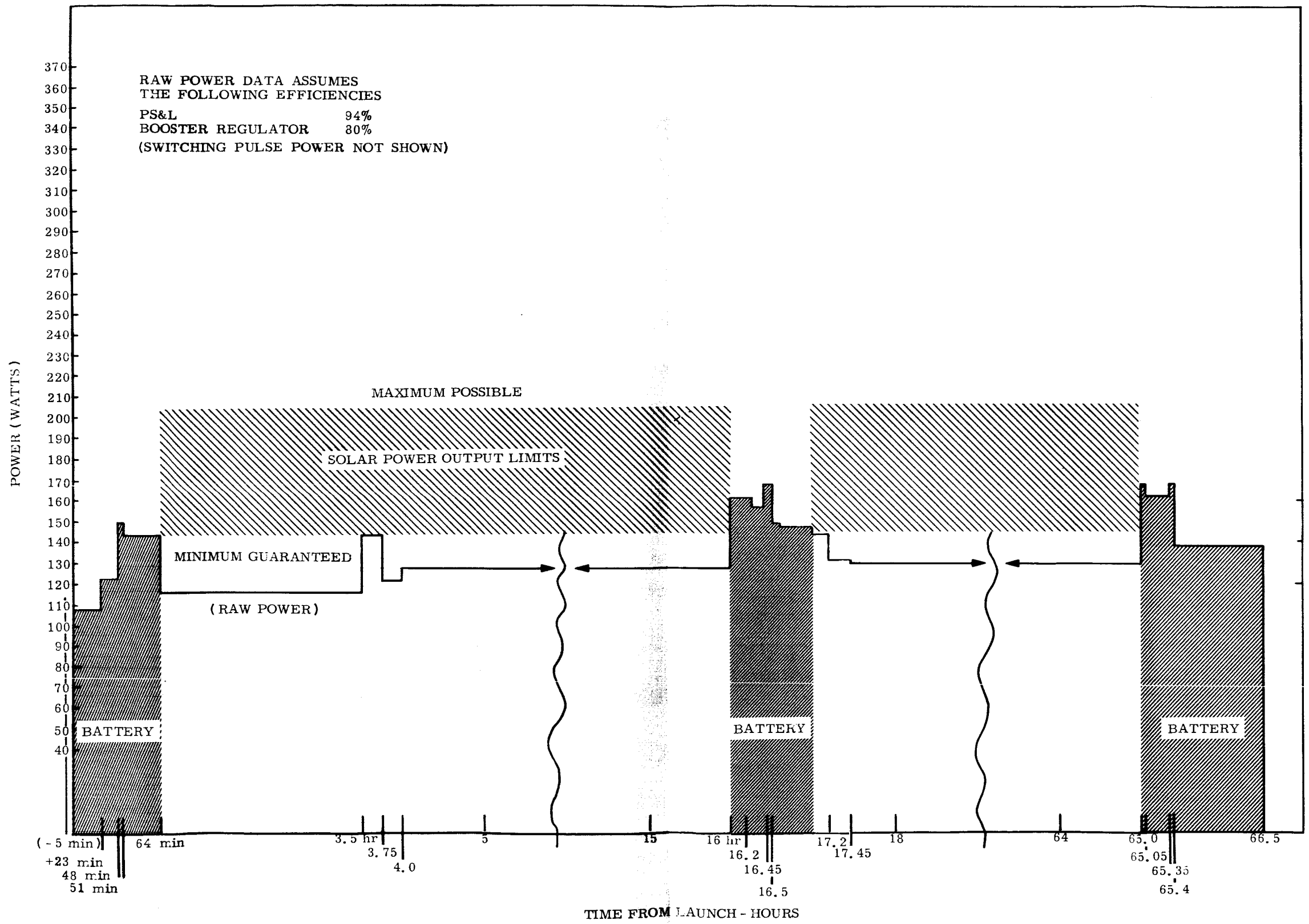

Figure 3.1-3. RA-3, 4, & 5 Raw Power Consumption

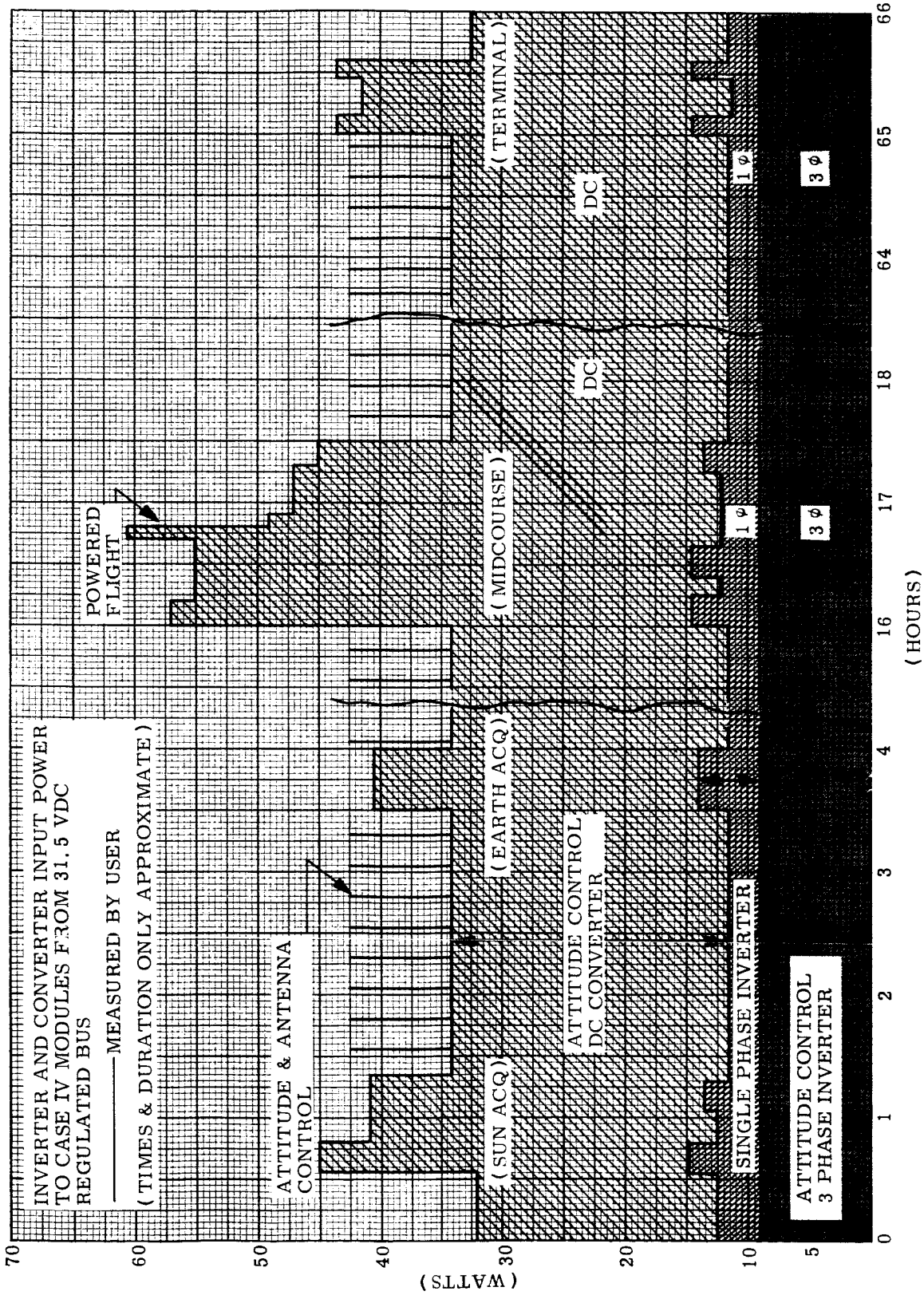
INVERTER AND CONVERTER INPUT POWER
TO CASE IV MODULES FROM 31.5 VDC
REGULATED BUS
MEASURED BY USER
(TIMES & DURATION ONLY APPROXIMATE)
POWERED
FLIGHT
ATTITUDE & ANTENNA
CONTROL
(SUN ACQ)
(EARTH ACQ)
(MIDCOURSE)
(TERMINAL)
ATTITUDE CONTROL
DC CONVERTER
DC
DC
SINGLE PHASE INVERTER
1 φ
1 φ
3 φ
3 φ
ATTITUDE CONTROL
3 PHASE INVERTER
(WATTS)
70
60
50
40
30
20
10
5
0
1
2
3
4
16
17
18
64
65
66
(HOURS)

Figure 4.6-1

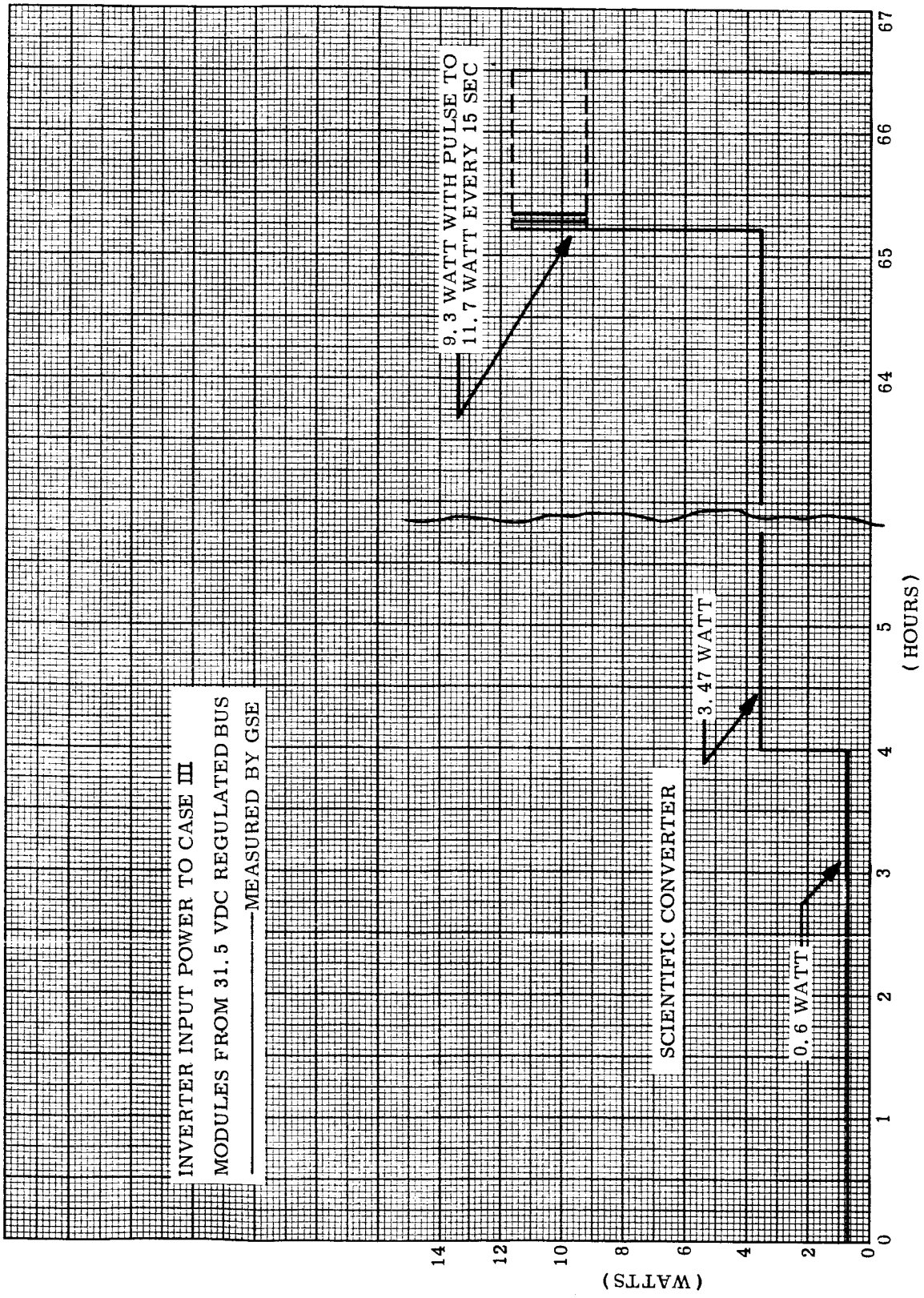
INVERTER INPUT POWER TO CASE III
MODULES FROM 31.5 VDC REGULATED BUS
MEASURED BY GSE
9.3 WATT WITH PULSE TO
11.7 WATT EVERY 15 SEC
3.47 WATT
SCIENTIFIC CONVERTER
0.6 WATT
(WATTS)
0
2
4
6
8
10
12
14
(HOURS)
0
1
2
3
4
5
64
65
66
67

Figure 4.9-1

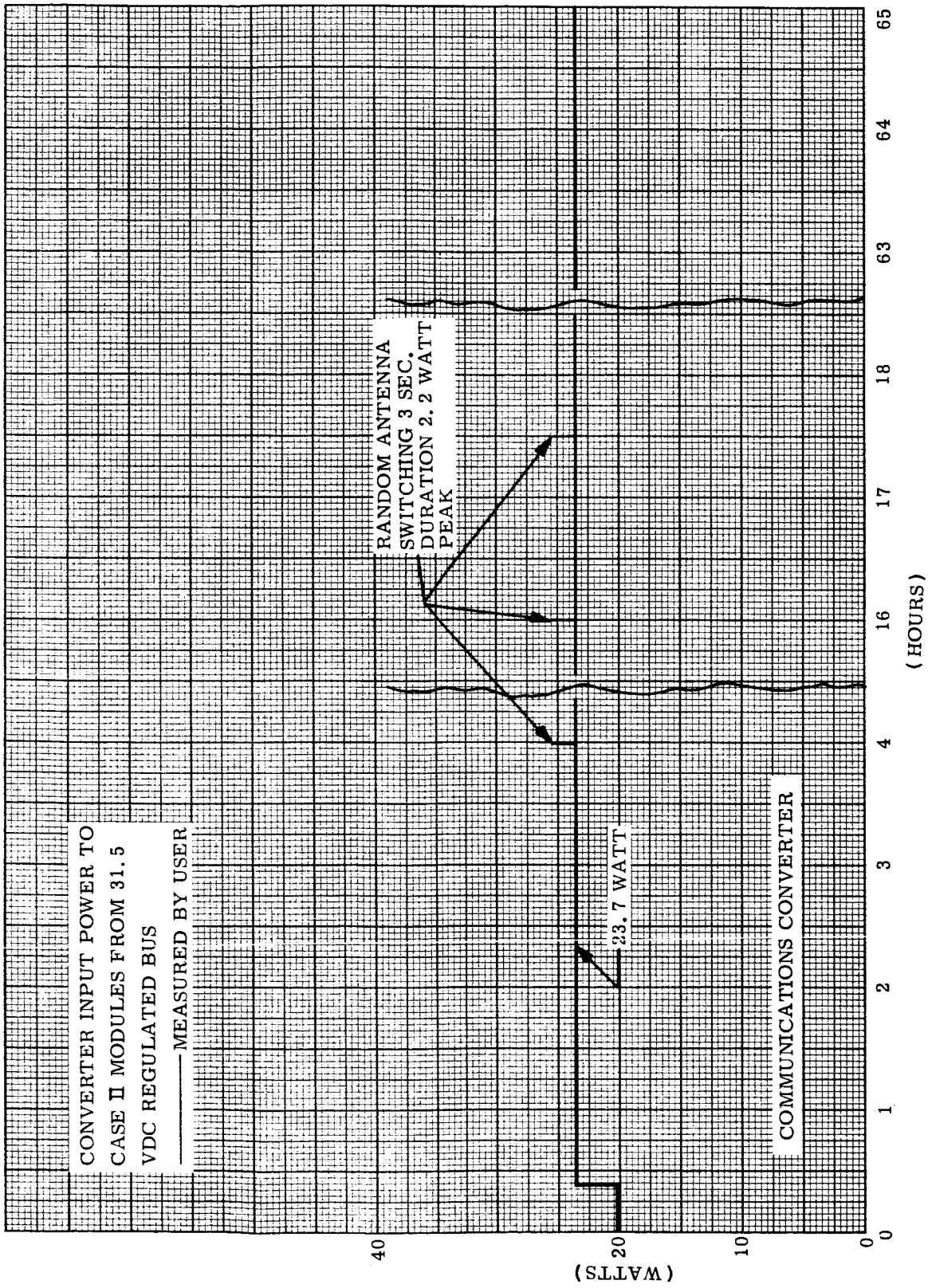
CONVERTER INPUT POWER TO
CASE II MODULES FROM 31.5
VDC REGULATED BUS
MEASURED BY USER
RANDOM ANTENNA
SWITCHING 3 SEC.
DURATION 2.2 WATT
PEAK
23.7 WATT
COMMUNICATIONS CONVERTER
(WATTS)
0
10
20
40
0
1
2
3
4
16
17
18
63
64
65
(HOURS)

Figure 4.11-1

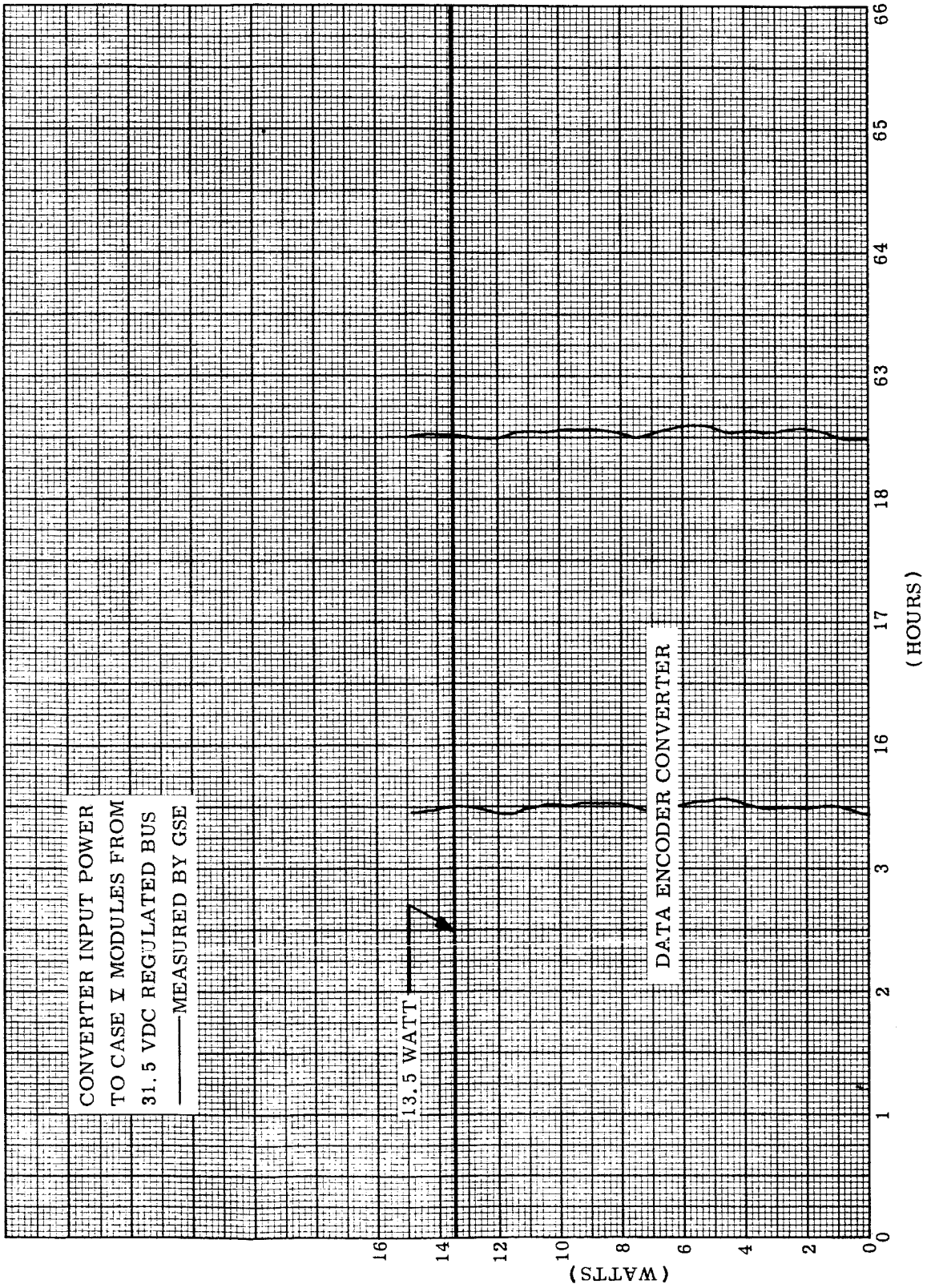
CONVERTER INPUT POWER
TO CASE V MODULES FROM
31.5 VDC REGULATED BUS
MEASURED BY GSE
13.5 WATT
DATA ENCODER CONVERTER
(WATTS)
16
14
12
10
8
6
4
2
0
0
1
2
3
16
17
18
63
64
65
66
(HOURS)

Figure 4.12-1

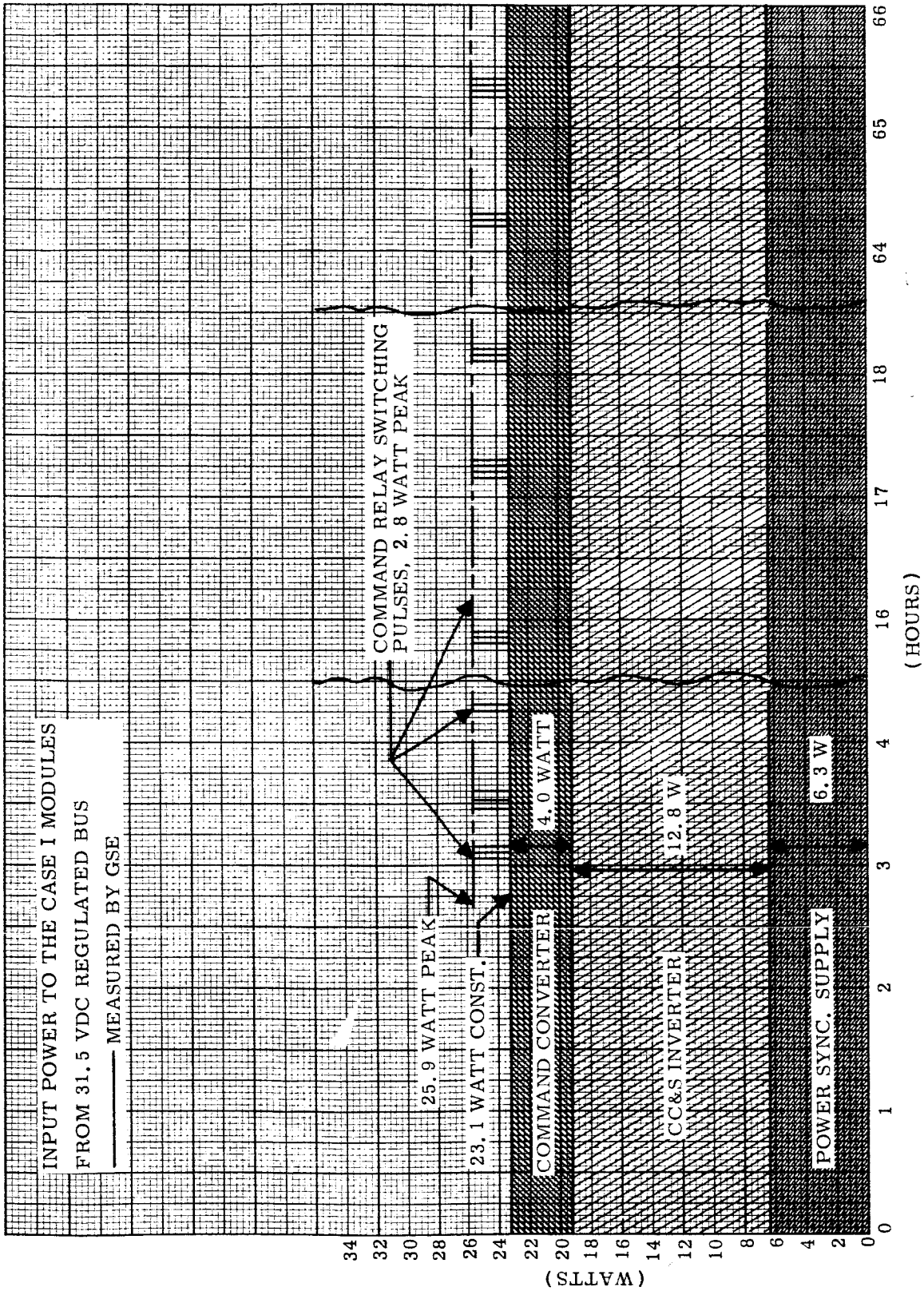
INPUT POWER TO THE CASE I MODULES
FROM 31.5 VDC REGULATED BUS
MEASURED BY GSE
COMMAND RELAY SWITCHING
PULSES, 2.8 WATT PEAK
25.9 WATT PEAK
23.1 WATT CONST.
COMMAND CONVERTER
4.0 WATT
CC&S INVERTER
12.8 W
POWER SYNC. SUPPLY
6.3 W
(WATTS)
(HOURS)
0
2
4
6
8
10
12
14
16
18
20
22
24
26
28
30
32
34
1
3
4
16
17
18
64
65
66

Figure 4.13-1

(Insert in Spacecraft Design Specification Book)

APPROVED:

System: M. R. Mesnard

Subsystem: Evan Linderman

JET PROPULSION LABORATORY

REVISED AND REWRITTEN

Spec. No. RA345-4-470 A
5 December 1961

FUNCTIONAL SPECIFICATION

SPACECRAFT RANGER RA-3, 4, 5 FLIGHT EQUIPMENT

MIDCOURSE AUTOPILOT SUBSYSTEM

1.0 SCOPE

This specification describes the functions performed by the RA-3, 4, and 5 spacecraft autopilot during the midcourse maneuver. The operation is described by block diagrams. Component and operational specifications are listed for this subsystem.

2.0 APPLICABLE DOCUMENTS

2.1 The following documents apply to this specification:

SPECIFICATIONS

Jet Propulsion Laboratory

RA345-3-110	Design Characteristics
RA345-4-430	Attitude Control Subsystem
RA345-4-440	Midcourse Guidance Subsystem, Spacecraft Design Specification Book, Ranger A-3, A-4, and A-5

3.0 AUTOPILOT FUNCTIONAL DESCRIPTION

3.1 Introduction

The autopilot intrafunctional relationship with the attitude control subsystem is shown in figure 3.3-1 of the Attitude Control Functional Specification (RA345-4-430). The autopilot controls the spacecraft motion at the appropriate times about the pitch, yaw, and roll axis. The components in the pitch and yaw loops are shown in block diagram form in figure 3.1-1.

3.2 Autopilot Flight Description

At approximately 15.5 hours after launch, the spacecraft starts receiving the radio command information for the midcourse maneuver. The radio command consists of the roll and pitch turn durations (with polarity) the velocity increment, and the execute command. On receipt of the execute command, the CC&S commands the Attitude Control Subsystem to switch the roll axis from optical to inertial lock, to connect the roll capacitor, to turn on the autopilot and to extend the directional high-gain antenna to the exit angle, which is 180° from the nested position. This sequence is described in more detail in the Attitude Control (RA345-4-430), Midcourse Guidance (RA345-4-440), and the CC&S (RA345-4-410), Functional Specifications. The midcourse motor is ignited after the sequence of command turns has been completed.

The line in space along which the turn command sequence positions the roll reference line when the error in the attitude control switching amplifiers is zero, is called the autopilot inertial reference line (IRL). The angular relationships are shown in figure 3.2-1. The roll reference line at midcourse motor ignition is within five milliradians of the IRL. This initial angular discrepancy is due to the dead zone of the attitude control switching amplifier.

3.3 Pitch and Yaw Autopilot Channels

The transverse velocity error, u (in figure 3.1-1 Autopilot Block Diagram, and table I Glossary of Symbols), results from the midcourse velocity correction. It is the purpose of the autopilot to keep this error close to zero. To accomplish this, the autopilot controls the angle λ_M, the measured inertial direction of the thrust vector relative to the IRL. The time-varying angle λ_M is the sum of the measured time-varying deflection of the thrust vector relative to the roll reference line (Δ_M), and the time-varying inertial attitude of the roll reference line relative to the IRL.

The pitch and yaw channels of the autopilot have two control loops. The inner loop is the autopilot loop which controls and stabilizes the vehicle attitude (θ_A) in inertial space in response to the autopilot command angle. Thus, the autopilot loop maintains a vehicle attitude θ_A which is (in the steady state) equal to $-1/K_S$ times the autopilot command angle. The autopilot command angle is then obtained from the outer loop, the path-guidance loop, by integrating $\lambda_M + \tau_G \theta_A$ with the proper sign to reduce λ_M. In the steady state, this near-perfect integration forces λ_M to be

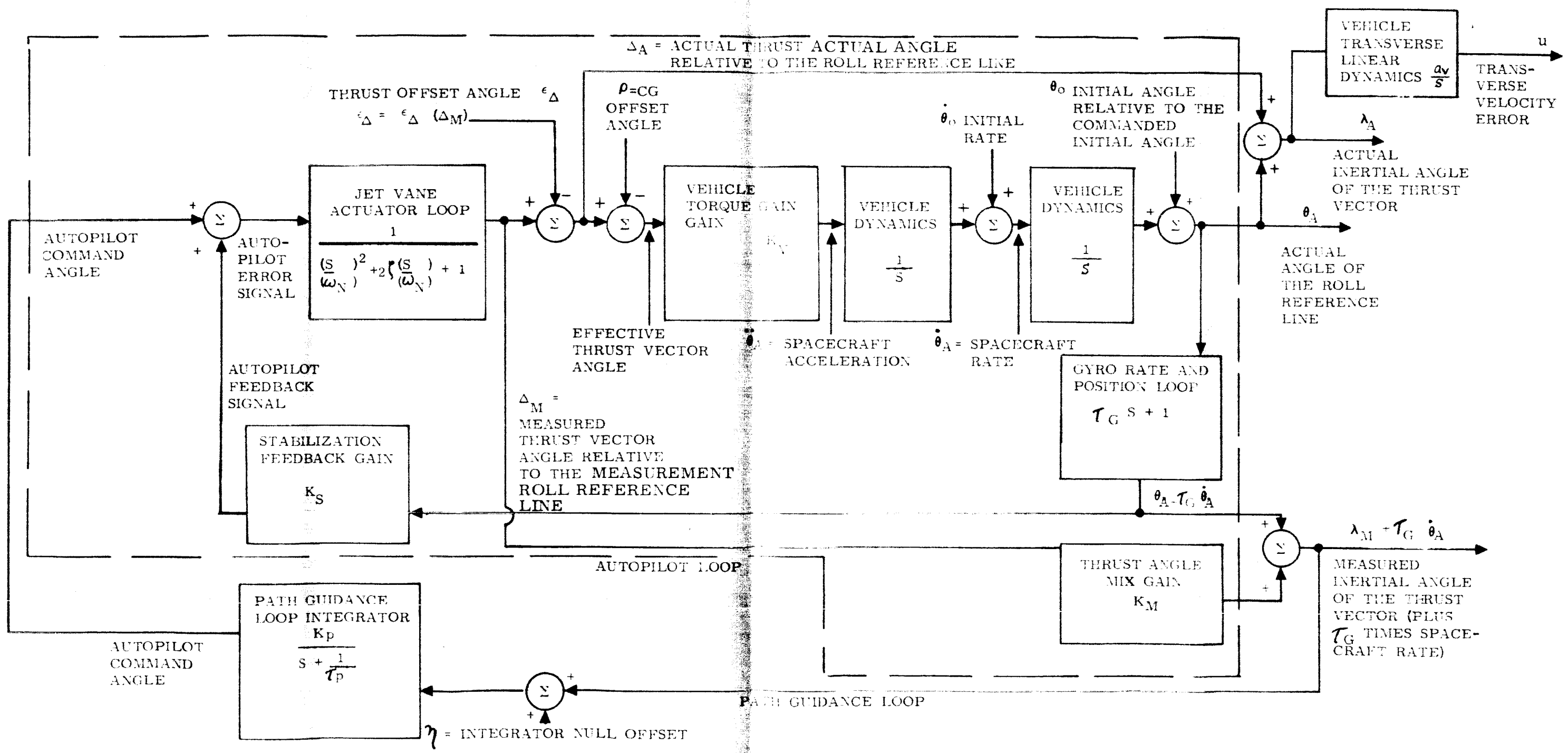

Figure 3.1-1. Autopilot Block Diagram (Pitch & Yaw)

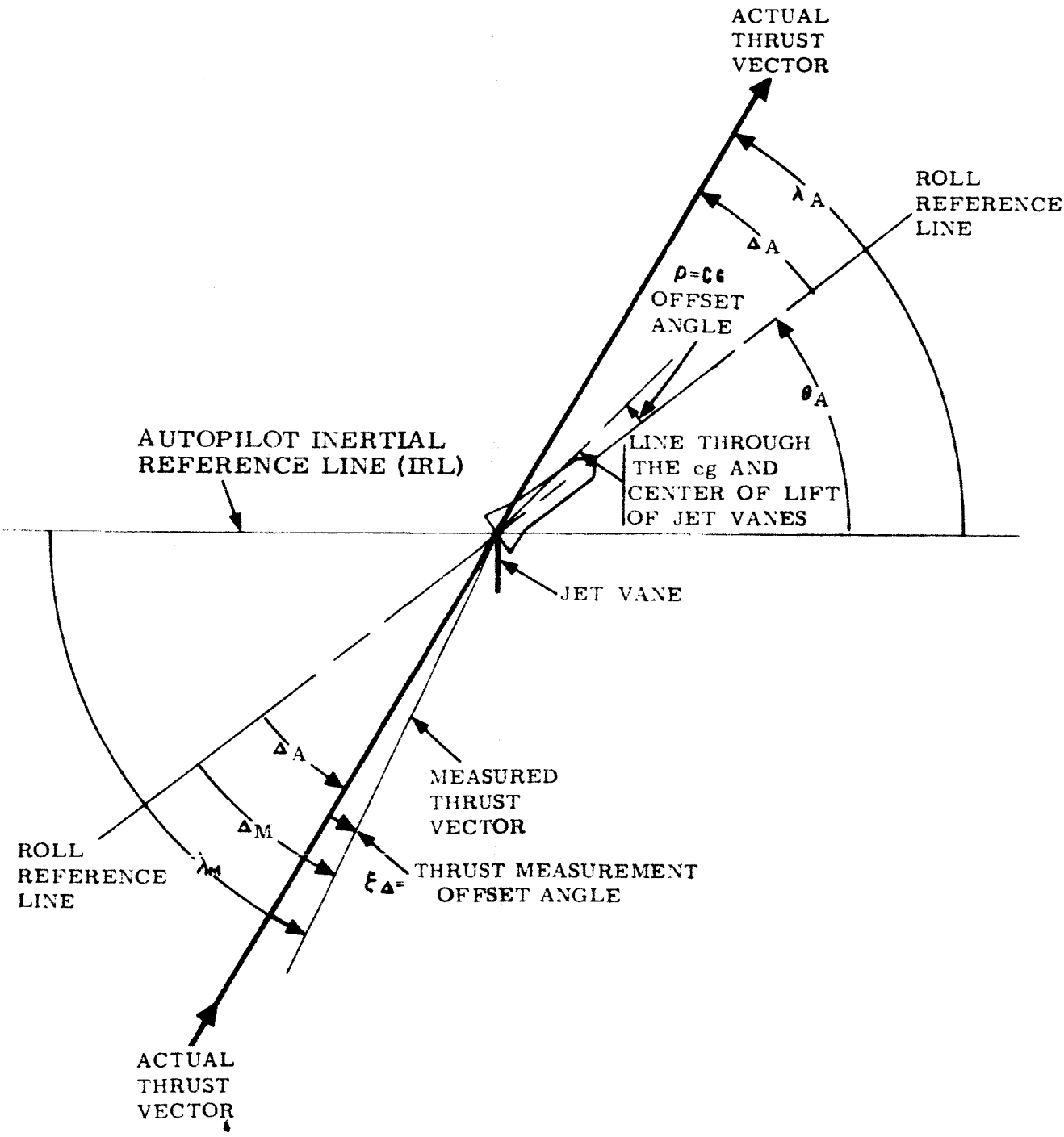

Figure 3.2-1. Angular Relationships

virtually zero, leaving λ_A with a residual error equal to the negative of the thrust vector offset ϵ_Δ.

It can be seen by inspection of the autopilot loop and the path guidance loop that, in the steady state, if $K_M = 0$ and $\eta = 0$, then $\lambda_A = +\rho$, whereas if $K_M = 1$ and $\eta = 0$, then $\lambda_A = -\epsilon_\Delta$. It has been shown that there is a value for $K_M = 1$ which minimizes the mean square error $\overline{\lambda_A^2}$, provided ϵ_Δ and ρ are normally distributed. This value is $K_M = \frac{\overline{\rho^2}}{\overline{\rho^2} + \overline{\epsilon_\Delta^2}}$ and the error is $\overline{\lambda^2}_A = K_M \overline{\epsilon_\Delta^2}$.

However, with $\epsilon_\Delta = 3.5$ milliradians 3σ and $\rho = 17.9$ milliradians 3σ, the result is $K_M = 0.963$ and $\lambda_A = 3.43$ milliradians 3σ. Since the improvement is so small (3.43 in place of 3.5 milliradians), K_M is shown here as unity for simplicity. Figure 3.3-1 shows the response for these parameters.

Stability is not difficult to achieve. The block diagram shows that the transfer function from the autopilot command signal to the thrust vector angle (λ_M) is approximately a constant at frequencies below the cut-off frequency of the autopilot loop. Thus, the path guidance loop, because it is slow compared with the autopilot loop, has a forward gain which is essentially a constant and a feedback gain which is essentially a single integration.

The torque necessary to control the vehicle is derived from the midcourse motor exhaust by jet vanes. Because the actual deflection of the thrust vector relative to the roll reference line is difficult to measure, the relationship between the jet vane angular position and the thrust vector angular deflection is calibrated before flight and the jet vane position signal is used as a measure of the thrust vector deflection.

The jet vane actuators are position servos with second order transfer functions. (See figure 3.1-1).

$$\frac{\text{measured jet vane angle}}{\text{commanded jet vane angle}} = \frac{A_M}{\Delta c} = \frac{1}{\left(\frac{S}{\omega_N}\right)^2 + 2\zeta\left(\frac{S}{\omega_N}\right) + 1}$$

The vehicle gain K_v is the vehicle angular acceleration, $\ddot{\theta}_A$, per unit of thrust deflection.

$$K_v = \frac{F\ L_c}{J_v}$$

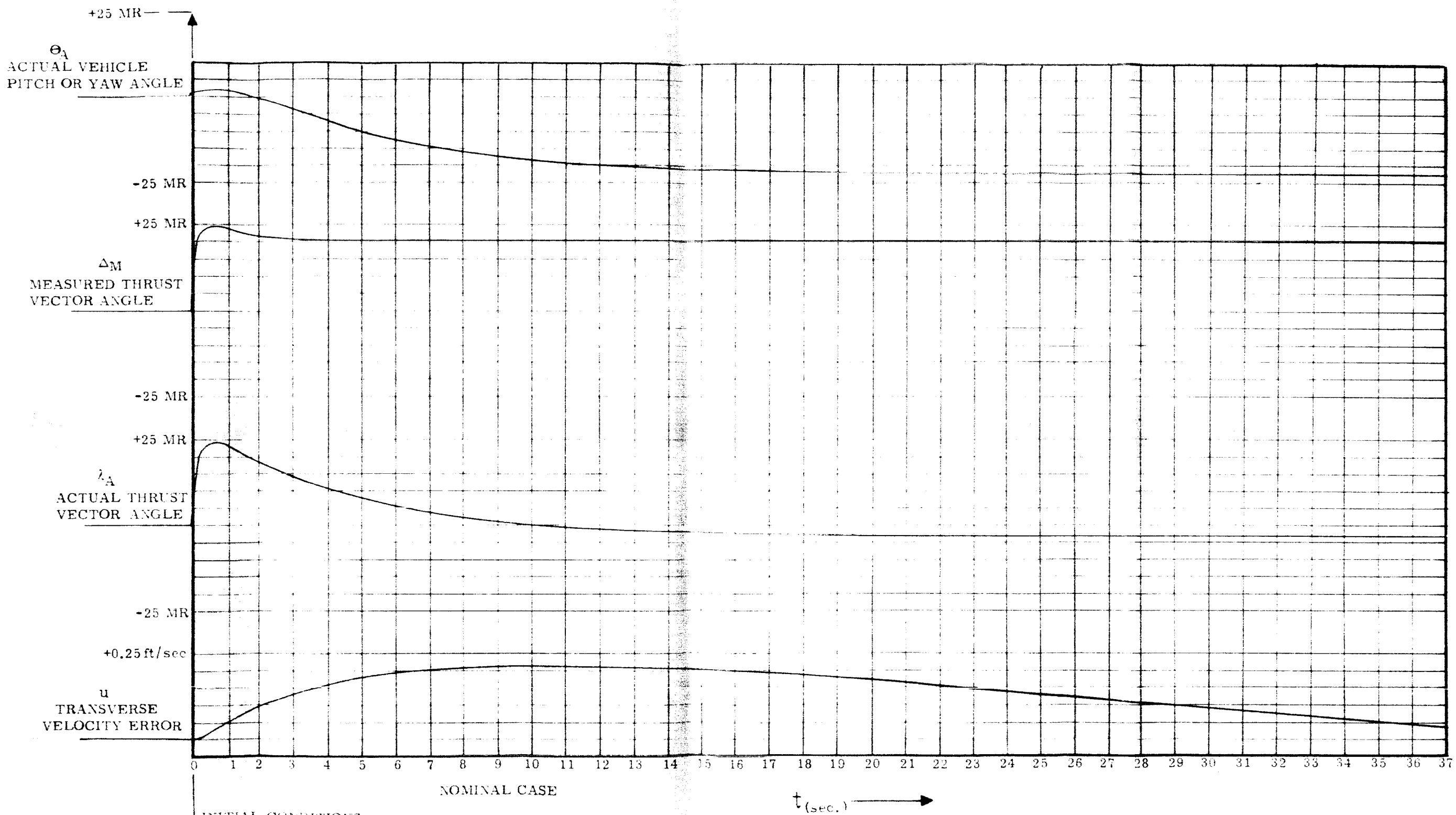

INITIAL CONDITIONS:

$\Theta_A(0) = \Theta_0$

$\dot{\Theta}_A(0) = 0$

$\Delta_p(0) = 0$

$\Delta_M(0) = K_s\Theta_A(0)$

$\dot{\Delta}_M(0) = 0$

NOMINAL PARAMETERS:

$\Theta_0 = 1\times10^{-3}$ RADIANS

$\epsilon_\Delta = 3.5\times10^{-3}$ RADIANS

$\rho = 17.9\times10^{-3}$ RADIANS

$\eta = 3.89\times10^{-4}$ RADIANS

$\tau_g = 2$ SEC.

$K_s = 3.952$ RAD/RAD

$K_p = 0.9436 \frac{\text{RAD/SEC}}{\text{RAD}}$

$K_M = 1$ RAD/RAD

$\tau_p = 500$ SEC

$\omega_A = 62.8$ RAD/SEC

$\zeta_A = 0.3$

$K_V = 0.767$ RAD^2/SEC^2

$a_V = 2.141$ FT/SEC^2

Figure 3.3-1. Pitch and Yaw Attitude Responses

Combining all these gains and transfer functions the stabilization loop control equation is:

$$\frac{\theta_A}{\theta_A} = \frac{K_v K_s \quad (\tau_G S + 1)}{\left(\frac{S}{\omega_N}\right)^2 + 2\zeta\left(\frac{S}{\omega_N}\right) + 1}$$

The approximation of the gyro transfer function is used for simplicity. In the study of system stability, the other terms are taken into account.

The value of K_v is a function of the vehicle and motor parameters. The values of τ_G and K_S are chosen to give good damping and gain margin with the path-guidance loop, open and closed. The closed loop response is of major importance, but the vehicle must not become unstable if the path guidance loop opens.

The path-guidance loop has an unstabilizing effect on the autopilot. The autopilot loop gain and time constant must be set in conjunction with the path guidance loop gains to produce the optimum set of parameters. The definition of optimum is determined by several factors: the system stability or damping, gain margins, sensor saturation limits, and of course, the transverse velocity error introduced by nominal system errors. The stability or damping criteria is that the low-frequency (path guidance) roots have at least 0.5 damping ratio. The gain margins are such that an increase of 6 db or a decrease of 12 db from the nominal gains will not cuase instability. Transients resulting from ignition of the motor with the worst combination of system errors do not cause saturation in the gyro. The transverse velocity error does not exceed 0.3 feet/second and is therefore compatible with the axial velocity resolution requirement.

Typical response of the complete autopilot pitch or yaw channel is shown in figure 3.3-1. It should be noted that the steady state value of the actual thrust vector deflection λ_A is equal to $-\epsilon_\Delta$ and not to ρ, which would be the case without a path-guidance loop, (and with K_s large).

3.4 Roll Autopilot Channel

The functional form of the roll autopilot channel shown in block diagram form (figure 3.4-1) is identical with the inner loop of the pitch and yaw channels. The roll channel has no path-guidance loop because a roll angle does not affect the thrust vector direction. The criteria for choosing the nominal loop gain and time constant are the same as for pitch or yaw.

The only steady roll disturbance is a roll torque produced by the mid-course motor. This torque shall not produce more than 20mr of steady state roll angle.

The roll channel drives all four jet vanes to provide roll control torques.

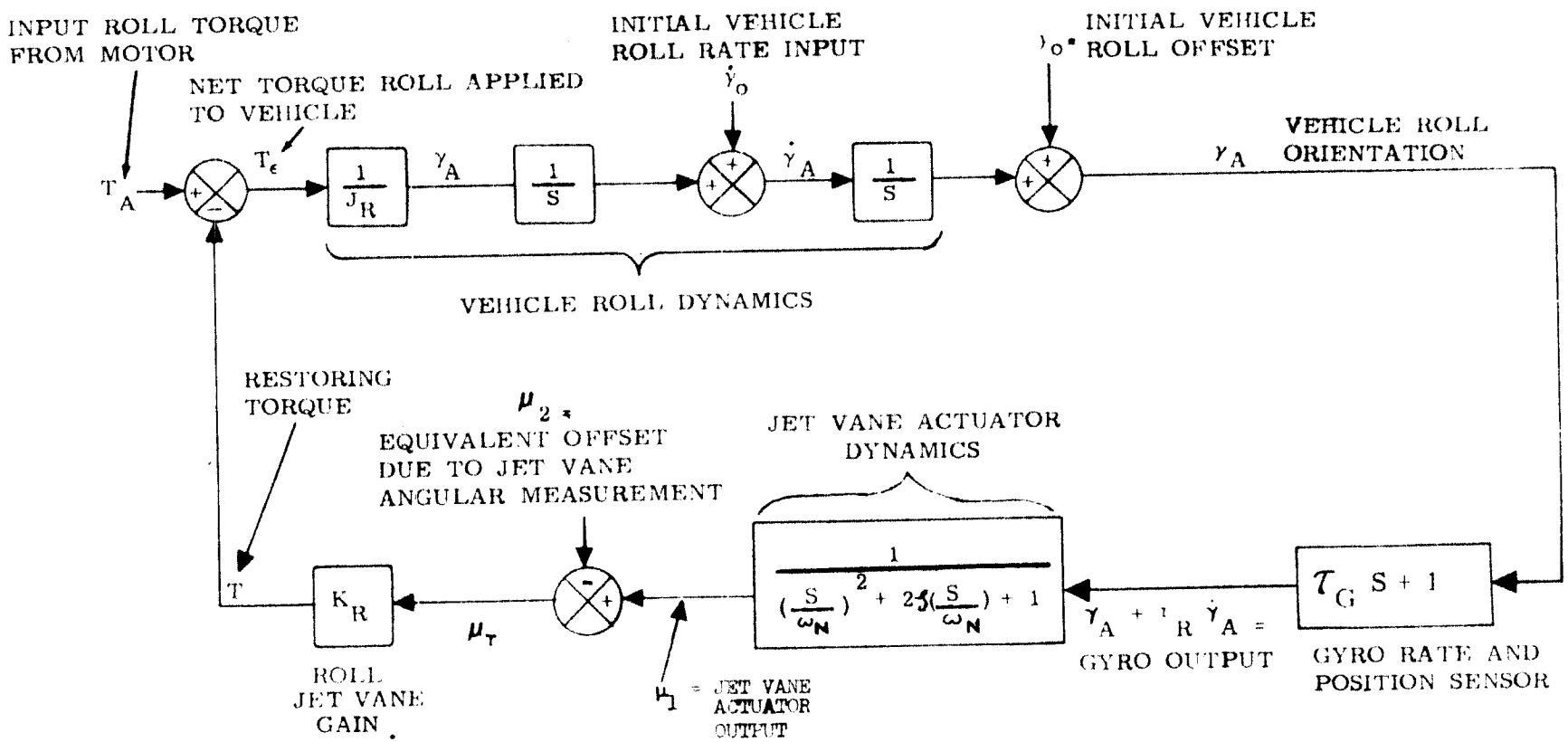

Figure 3.4-1. Autopilot Roll Channel Block Diagram

4.0 REQUIREMENTS ON PARAMETERS AND COMPONENTS

Before stating the requirements for parameters and components, the jet vane identification and deflection definitions will be discussed and the Glossary of Symbols included for reference.

Each jet vane is identified according to the axis on which it is located. Thus, there is a positive X jet vane, a negative X jet vane, a positive Y jet vane, and a negative Y jet vane. Positive deflection of the jet vanes is defined as follows and illustrated in figure 4.0-1

Negative spacecraft pitch acceleration is produced by positive deflection of the X jet vanes. Negative spacecraft yaw acceleration is produced by positive deflection of the Y jet vanes. As a consequence of the above definitions, positive spacecraft roll acceleration is produced by positive deflection of the positive X and positive Y jet vanes and by negative deflection of the negative X and negative Y jet vanes.

All component alignment tolerances, etc., are relative to the spacecraft reference lines as defined in the Structural Functional Specification, RA345-4-510 and in sections 5.0 and 6.0 of the Attitude Control System Functional Specification, RA345-4-430.

All specifications must be met under all environmental conditions.

Specifications followed by the symbol " * " are not critical. If deviations from non-critical specifications are desired, requests for changes must be made known. Deviations from specifications must not be made without notice. Tolerances not otherwise marked are maximum values.

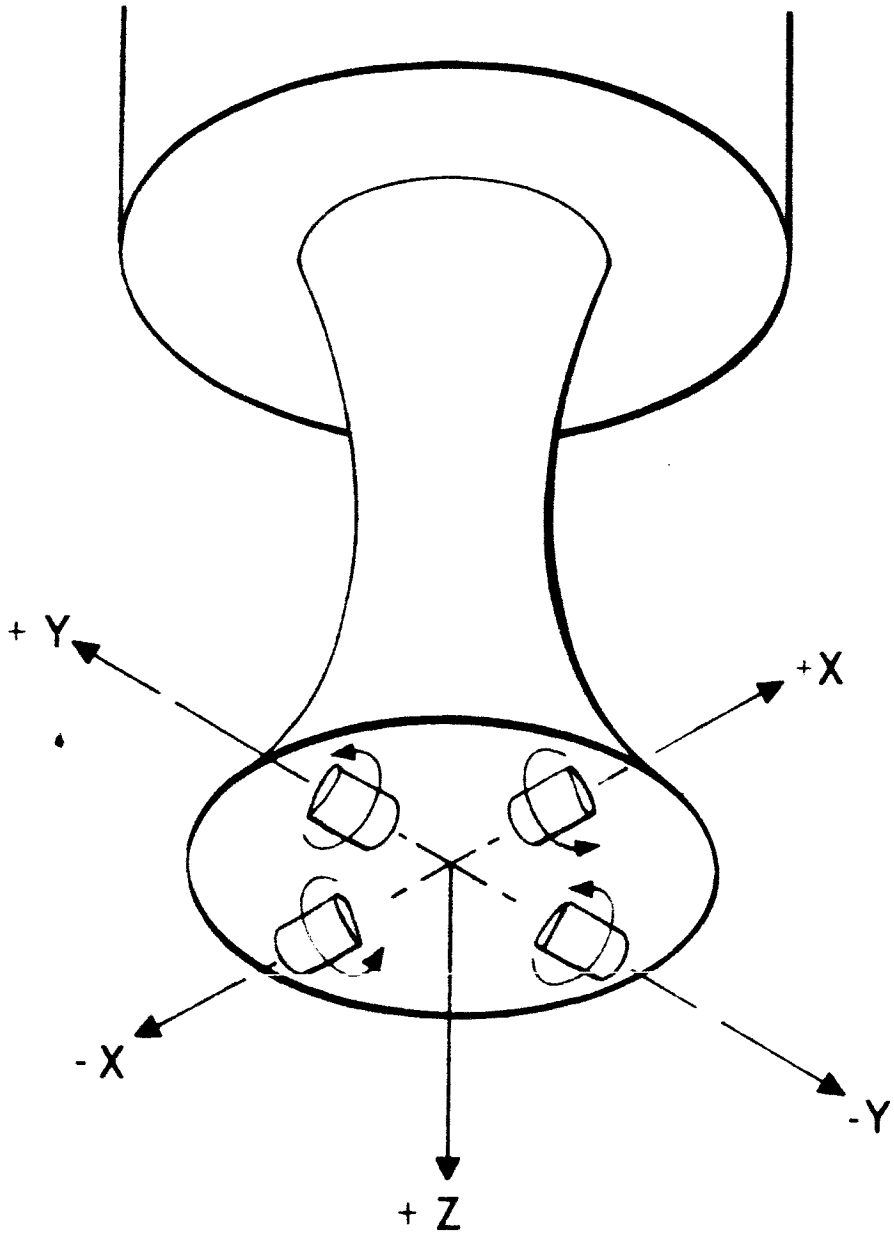

Figure 4.0-1. Jet Vane Deflections, Positive Definitions

Table I. Glossary of Symbols

dot above symbol	=	differentiation with respect to time	(sec^{-1})
IRL	=	inertial reference line	-
J_v	=	vehicle moment of inertia	$slug\text{-}ft^2$ = $ft\text{-}lb\text{-}sec^2$
u	=	side velocity	ft/sec
F	=	motor thrust	lb f
m	=	vehicle mass	slug
Lc	=	distance from CG to center-of-thrust	feet
T	=	roll restoring torque from jet vanes	ft.lbs
T_A	=	roll torque from motor and other misalignments	ft.lbs
T_ϵ	=	net roll torque applied to vehicle	ft.lbs
λ_A	=	actual angle from IRL to thrust vector	radian
λ_M	=	measured angle from IRL to thrust vector	radian
ω_N	=	second order "break" frequency of jet vane actuator loop	radian/sec
ρ	=	c.g. offset angle	rad
η	=	guidance integrator null offset	rad
θ_A	=	angle from IRL to roll reference line	radian
θ_o	=	initial angle from IRL to roll reference line	rad
Δ_A	=	actual angle from thrust vector to roll reference line	rad
Δ_M	=	measured angle from thrust vector to roll reference line	rad
ϵ_Δ	=	thrust offset angle	rad
a_v	=	vehicle linear deceleration	ft/sec^2
K_v	=	vehicle torque gain	$\frac{rad/sec^2}{rad}$
K_s	=	stabilization loop gain	$\frac{rad}{rad}$
K_P	=	path-guidance-loop gain	$\frac{rad/sec}{rad}$
K_R	=	roll channel jet vane torque gain	ft.lbs/rad
K_M	=	thrust angle mix gain	rad/rad
τ_G	=	gyro-loop time constant	sec

Table I. Glossary of Symbols (Cont'd)

τ_P	=	integrator leakage time constant	sec
ζ	=	jet vane actuator loop damping ratio	$\frac{\text{rad/sec}}{\text{rad/sec}}$
γ_o	=	initial roll angle offset	rad
γ_A	=	roll angle offset	rad
u_t	=	actual jet vane angle	rad
u_1	=	jet vane actuator output	rad
u_2	=	equivalent jet vane offset from measurement error	rad

4.1 Spacecraft and Midcourse Motor Parameters

Quantity	Nominal Value	Tolerance
Thrust	50 lbs	±5 percent *
Distance from c.g. to center-of-lift of jet vanes	23 inches	+5 inches -1 inch
Moments of Inertia		
Pitch I_{xx}	126 slug Ft^2	±20 percent *
Yaw I_{yy}	140 slug Ft^2	±20 percent *
Roll I_{zz}	85 slug Ft^2	+20 percent * -25 percent *

4.2 Midcourse Motor Calibration and Mounting Requirements

4.2.1 The pitch angle of the resultant thrust vector relative to the spacecraft roll reference line must be determined as a function of the pitch angle of the jet vanes to an accuracy of ±3.5mr maximum error in the angle of thrust vector. This must be done for yaw angles of the thrust vector of -15mr, 0mr, and +15mr.

* Not critical.

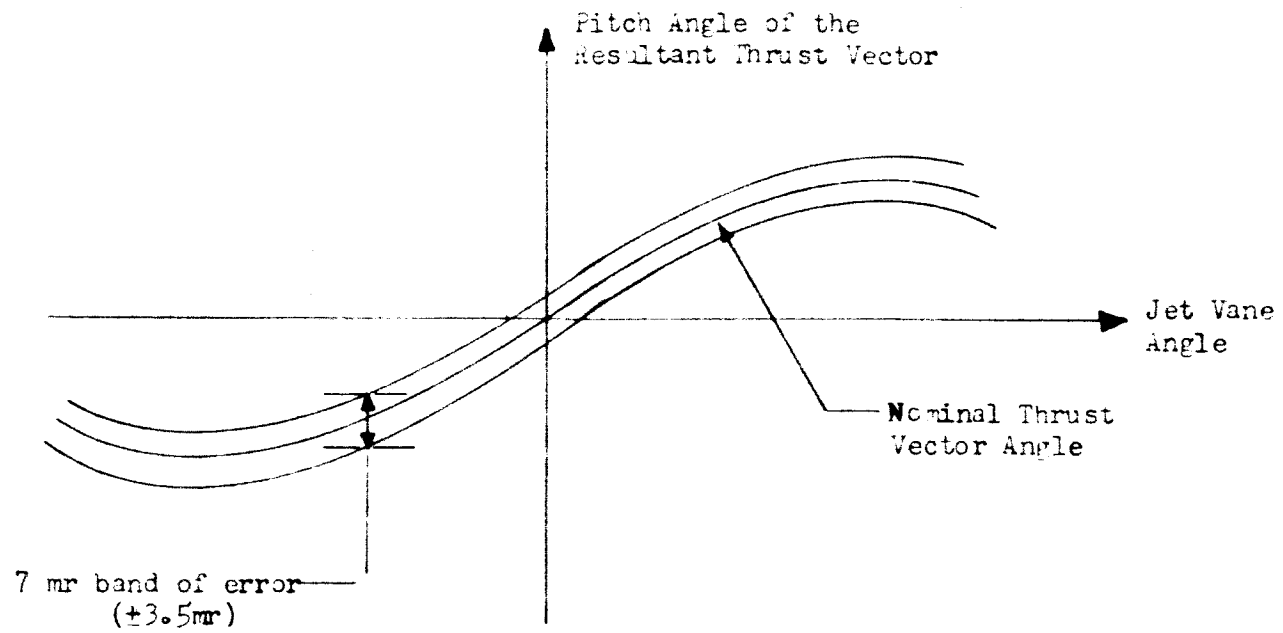

4.2.2 The yaw angle of the resultant thrust vector must be calibrated in an identical manner.

4.2.3 The roll torque must be calibrated versus the roll angle of the jet vanes to a resolution of 0.02 ft-lbs.* This must be done for pitch and yaw thrust vector angles = 0.

4.2.4 The Z coordinate of the line about which the resultant thrust vector turns as the jet vanes are deflected must be determined with an accuracy of ±1 inch maximum.

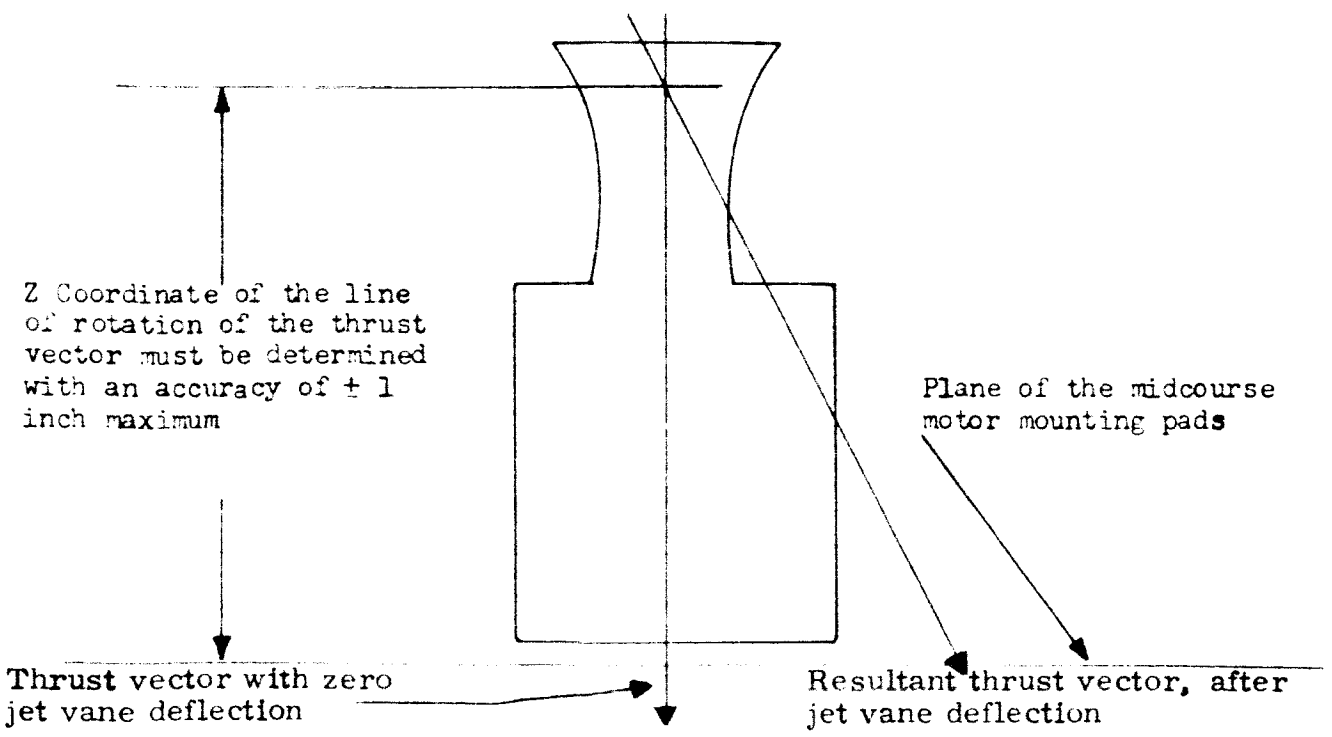

4.2.5 The location of the CG in the midcourse configuration must be determined to an accuracy of ±0.25 inch in X and Y coordinates and ±1 inch in Z coordinate. The location of the CG in the midcourse configuration must take into account the location of on-board equipment such as arms, booms, and the high gain antenna. For example, the high gain antenna is 180° from the nested position. The mass at midcourse of on-board equipment must also be taken into account. For example, the storage battery does not have the same mass at midcourse as it has at launch.

4.2.6 The midcourse motor must be calibrated and mounted such that the X and Y coordinates of the thrust vector, when it is parallel to the roll reference line, is within a 3/16-inch square centered about the nominal X and Y coordinates of the nominal CG of the midcourse configuration.

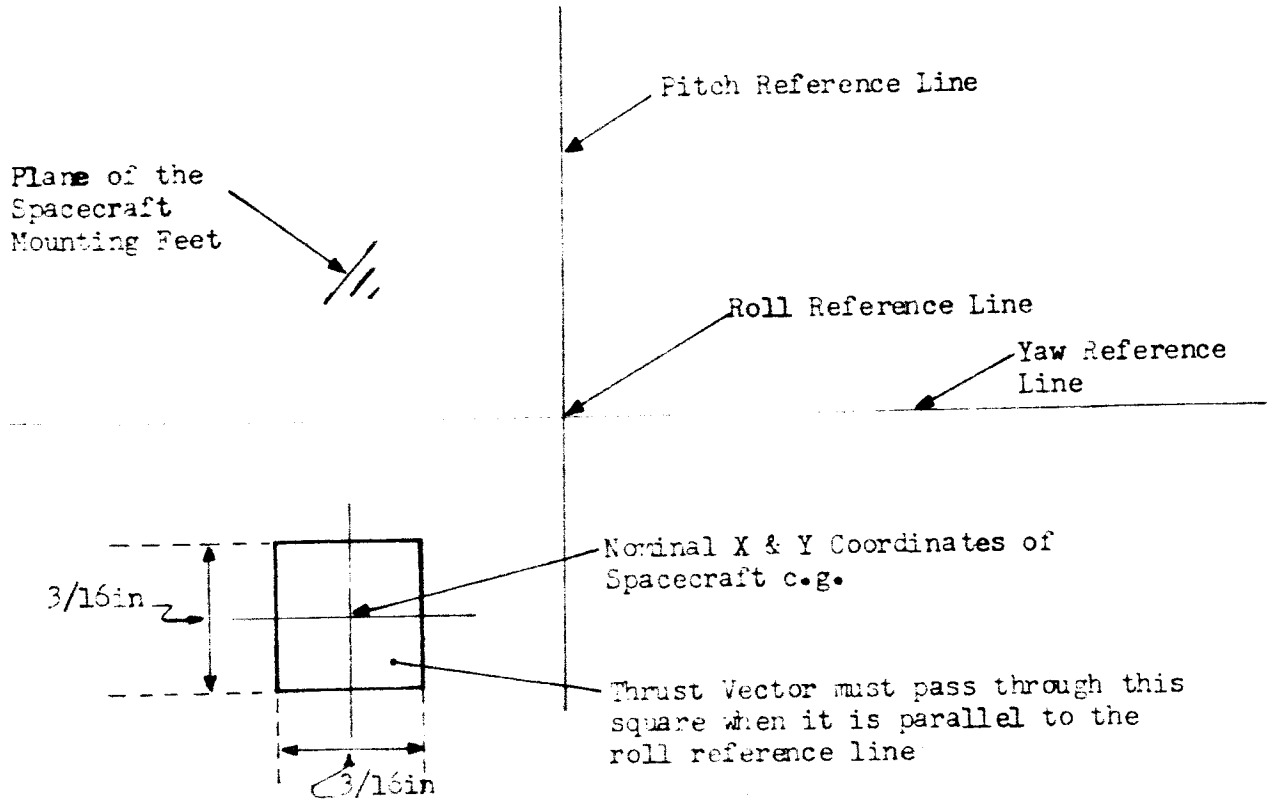

4.2.7 Asymmetrical impingement of the exhaust gases on the spacecraft shall not alter the direction of the net thrust vector by more than 0.5mr due to the combined effects of forces on the impinged surfaces and warping due to uneven heating.

4.2.8 The jet vanes axes must be aligned parallel to the pitch and yaw reference lines within 20mr.

4.3 Jet Vanes and Jet Vane Actuator Loop Specifications

Refer to figures 4-2 and 4-4.

Quantity	Nominal Value
1. Second order closed loop cut-off frequency ω_N.	62.8 $\frac{\text{Rad}}{\text{Sec}}$ minimum
2. Damping ratio ζ	0.3 minimum

4.3.1 Pitch, Yaw and Roll Moment Capabilities

The pitch and yaw restoring moment capability about the vehicle center of gravity must be 3.2 ft-lbs minimum. Any combination of pitch and yaw moments within the above capability must not reduce the net available roll moment capability below 0.1 ft-lbs.

4.3.2 Pitch, Yaw and Roll Torque Gain Linearity

The incremental restoring moment versus vane deflection in pitch, yaw and roll shall not vary by more than 30 percent of the zero torque value of incremental restoring moment versus vane deflection for any combination of pitch, yaw or roll torques within the capabilities listed in section 5.3.1 above. The incremental restoring moment versus vane deflection in pitch, yaw and roll shall not vary by more than 10 percent of the zero torque value of the incremental restoring moment versus vane deflection for any combination up to 1.6 ft-lb pitch and yaw and 0.05 ft-lb roll.

4.3.3 Jet Vane Cross Coupling

The cross coupling due to jet vane configuration or geometry shall be such that there shall be no combination of restoring torques within the maximum value on any two axes that will change the restoring torque about the third axis by more than 10 percent of its maximum value.

4.4 Autopilot Overall Specifications

Quantity	Nominal Value	Tolerance
1. Autopilot loop gain product $K_s K_v$		
Pitch and yaw axes	3.03 $\frac{1}{\text{Sec}^2}$	±20 percent
2. Autopilot loop gain product $\frac{K_R}{J_R}$		
Roll axis	0.632 $\frac{1}{\text{Sec}^2}$	±20 percent

	Quantity	Nominal Value	Tolerance
3.	Path guidance loop gain product $K_p K_v$		
	Pitch and yaw axes	$0.721 \frac{1}{Sec^3}$	±20 percent
4.	Thrust angle mix gain K_M		
	Pitch and yaw axes	1.0	±20 percent

4.5 Gyro and Gyro Loop Specifications

These specifications are in addition to those listed in the attitude control specification RA345-4-430, section 5.3. Refer to figures 3.1-1 & 3.4-1.

	Quantity	Nominal Value	Tolerance
1.	Time constant τ_G/K_G		
	Pitch axis	2 seconds	±15 percent
	Yaw axis	2 seconds	±15 percent
	Roll axis	2 seconds	±15 percent
2.	Torquing amplifier voltage saturation	53mr minimum	

4.6 Path Guidance Loop Integrator Specifications

Refer to figure 4-2.

	Quantity	Nominal Value	Tolerance
1.	Time constant τ_p	500 secs minimum	
2.	Null offset η	0	±1mr

(Insert in Spacecraft Design Specification Book) APPROVED:

System: M. R. Mesnard

Subsystem: Elliot Freeman

JET PROPULSION LABORATORY

Spec. No. RA 345-4-510 A
20 March 1962

SUPERSEDES:
RA 345-4-510
14 November 1960

FUNCTIONAL SPECIFICATION
RANGER RA-3 THROUGH RA-5 SPACECRAFT
STRUCTURES

REVISED & REWRITTEN

---

1. SCOPE

This specification covers the functional requirements for the Ranger A3, A4 and A5 spacecraft structure.

2. APPLICABLE DOCUMENTS

2.1 The following documents apply to this specification:

SPECIFICATIONS

Jet Propulsion Laboratory

	Spacecraft Design Specification Book, RA 345
20054	Process Specification, Keensert Inserts, Installation and Removal of

DRAWINGS

Jet Propulsion Laboratory

J 315 0103	RA-3, RA-4, and RA-5 Spacecraft Assembly Drawing

J 315 1740	RA-3, RA-4, and RA-5 JPL Interface and ADF Lunar Capsule
D 395 1044	Spacecraft, Quadrant, Attitude Control Jets, and Solar Sensor Locations

PUBLICATIONS

Military

MIL-HDBK-5	Strength of Metals, Aircraft Elements, March 1959

3. REQUIREMENTS

3.1 General

The Ranger spacecraft structure shall be such that it will serve as a base for communication, telemetry, attitude control, power supply and scientific experiment, and will also meet constraints set upon it by the external dimensions of the Atlas/Agena configurations.

3.2 Assemblies

The following major assemblies are considered in the spacecraft structure:

a. Spaceframe

b. Solar panels

c. Antenna - high gain

d. Midcourse propulsion assembly

e. Omniantenna and support

f. Gamma ray spectrometer boom

g. Lunar capsule system (supplied by Aeronutronics)

h. Lunar capsule radio altimeter (supplied by Aeronutronics)

3.3 Design Constraints

3.3.1 Structural Design Criteria

The criteria to be used on the assemblies specified in paragraph 3.2 and on the spacecraft as a whole are defined in JPL Specification RA 345-4-511, Functional Specification, Spacecraft Ranger RA-3 through RA-5, Structural Design Criteria.

3.3.2 Materials

3.3.2.1 Thermal control of external surfaces is based on the following considerations:

a. The thermal control technique shall be compatible with the basic material.

b. Corrosion protection is not required for assembly or storage. Corrosion protection should be omitted completely if it is in variance with the method of thermal control.

c. Temperature control surfaces must be stable in a vacuum.

3.3.2.2 Materials shall be chosen for electronic chassis so that transfer by evaporation and redeposition is minimized.

3.3.2.3 Lubrication of moving parts shall be with vacuum compatible materials and it shall be backed up, if possible, with pressurized containers and seals.

3.4 Spaceframe Criteria

The spacecraft shall serve as a communicating attitude controlled vehicle in space and shall serve as a platform for conducting scientific experiments. The spaceframe shall support all equipment necessary for this function. The complete lunar capsule system including the radio altimeter shall be attached to the forward plane of the spaceframe.

The complexity of the functions of the spacecraft, combined with the desirability of having a basic vehicle capable of performing a variety of missions, led to the philosophy of separating the electronic packaging from the prime structure. The basic shape of a hexagonal donut results from the following criteria:

a. Most of the spacecraft weight should be placed as closely as possible to the support points of the previous stage to reduce the amount of bridging trusswork.

b. A maximum volume should be available for the packages.

c. A sufficient number of "bolt on type" cases must be provided to allow further subdivision as to spacecraft function. (i.e., communications, power, attitude control, etc.).

d. The size and shape of the cases shall be designed such that all component resonant frequencies are in excess of 200 cycles per second. Present state of the art packaging techniques shall be used. Approximately one cubic foot per case is desirable. The hexagonal framework thus will allow for the attachment of six cases to its periphery, each mating surface being normal to the X-Y plane.

3.5 Spaceframe Description

The spaceframe is to consist of six vertical support members spaced radially 60 degrees apart. They shall be structurally joined together in a fixture which shall maintain the tightest possible tolerances. The structural joining of members shall be through bolting. Reference and mating surface design tolerances shall be reduced by machining after

assembly. The vertical support members are to be cast AZ63 magnesium and the interconnecting structure ZK60. Aluminum sheets 2024-T3, are to be bolted to the top, bottom, and inside surfaces of the spaceframe to act both as shear panels and covers for electronic gear protruding from the cases. Of the many techniques available for assembling the spaceframe, bolting was chosen as that technique most favorable to the tight tolerances required. Tight tolerances stem from the desirability of having ready reference and mating surfaces for separation, and the alignment of experiments, attitude control sensors, and the gyros. A pair of K-braces are to be installed which shall span the distance between the feet of the spaceframe and the mating surface for the cases. The K-brace design serves to eliminate the excessive gains of the first torsional mode of the loaded spacecraft. At tie-in points on the magnesium support castings, where high loads may be expected and a tapped hole is required, Keenserts are to be installed as per JPL Specification 20054.

Aside from the six cases of electronic components, several items are to be mounted on the framework members. The attitude control gas jets and primary solar sensors must be located as shown in Drawing D 395 1044. Standard assembly tolerances are sufficient for mounting these jets. The solar sensors require an accuracy of 0.005 inches in 10 inches perpendicular to the reference plane.

Foot C of the spacecraft will be considerably different from the other five as it is approximately at this point that the high gain antenna must hinge. Motion of the antenna is to be provided through a gear train, the housing for which, shall be a pressurized container integral with the spaceframe. Also located at this foot shall be a housing for the antennas rotary co-ax joint.

3.6 Component Structures

3.6.1 Solar Panels

Power requirements for Ranger A3, A4, and A5 dictate that 20 square feet of area be made available for solar cells. This area shall be divided equally between two panels placed diametrically opposite to each other on the spacecraft with hinges at the feet of the spaceframe. They will be supported in a near-vertical position during powered flight to withstand the flight loads. After spacecraft separation, the panels are to be folded outward into a horizontal position, which will locate the cells approximately perpendicular to the sun's rays. In the open position, the panels shall lie along an axis normal to the plane of motion of the high gain antenna. Since panel erection will occur prior to attitude stabilization, opening rates are not critical from the standpoint of the spacecraft, however, to prevent damage to the panel, accelerations at the tips shall not exceed one "G".

The panels must, of necessity, be trapezoidal as they must roughly follow the contour of the shroud envelope. They are to be hinged through self aligning bearings at the feet of the spacecraft, and they are to be designed such that for different missions, additional panels

may be added (not to exceed a total number of six) to provide sixty square feet of area. They are to be reversible on the hinges so that the cells may be faced either forward or aft. It must be noted, however, that increasing the number of panels to the full complement of six reduces the allowable antenna motion to approximately 90 degrees. The interface between structure and power is the surface to which the cells are bonded. One of the factors affecting the efficiency of the cells is their temperature. This can be related to the gradient across the mounting plate, and therefore a material with a high coefficient of thermal conductivity is required.

Resonant frequency and weight are of prime importance in the design. An optimization with respect to these two criteria demonstrates the fact that a stiffening framework is required to be attached to the basic panel. This has other advantages as future panel stiffening or change of support technique may be accomplished through frame modifications only. Aluminum is to be used for both parts because of its light weight and high coefficient of thermal conductivity. The panel itself is to be constructed of 5052-H39 honeycomb core with 6061-T6 facings. The frame members shall be 2024-T4. Attachment of the frame to the panel is to be accomplished by means of inserts imbedded in the panel and retained by potting compound. These inserts are to extend through only one face of the panel as there must be no holes or projections on the solar cell side. Furthermore, for temperature control of the panel, the facing on the insert side shall be hard-anodized.

3.6.2 Antenna - High Gain

The high gain antenna shall consist of a four foot diameter parabolic dish with an f/d ratio of 0.35. The antenna shall be hinged on one axis to provide it with a rotational movement of 180 degrees in the Y-Z plane after spacecraft separation. The geometric design of the parabolic reflector, feed, and connector shall be established from telecommunications requirements. Local deviations from a parabolic shape of 1/8 inch are allowable. The antenna shall be nested aft of the spacecraft and inside the Agena adapter with the feed projecting into the Agena guidance compartment. Its axis shall coincide with the spacecraft's longitudinal axis.

During powered flight, the antenna is to be constrained by snubbers. Six shall be attached to the spaceframe and six to the Agena adapter. After spacecraft separation, the adapter with its snubbers will no longer be present, so that the antenna can be rotated without the use of disconnect devices.

The antenna shall be designed primarily on a minimum weight basis since this parameter is readily converted into an increase in the size of the driving gear train. With a minimum area coverage requirement for the reflector of 20 percent, an aluminum wire mesh consisting of 0.025 inch diameter wire with a spacing of 1/4 inch is preferred. To support this, an aluminum sheet metal structure is necessary. This structure is to be formed from six radial 2024-T3 sections connected

through two 6061-0 heat treated concentric rings. At the center a 6061-T6 aluminum hub will mate with the feed. This latter assembly bolts to the hub for possible replacement due to damage to either part. The feed itself is to be a set of brazed 321 stainless steel subassemblies. A brazed aluminum feed is desirable, but it would require excessive development time.

3.6.3 Midcourse Propulsion Assembly

The midcourse propulsion system function is to remove or reduce injection dispersion errors. The assembly is located in the center of the spaceframe such that the thrust axis of the propulsion assembly is parallel with the roll axis of the spacecraft. The assembly shall have the capability of moving in a transverse plane within a one inch radius circle for alignment with the spacecraft center of gravity.

3.6.4 Omniantenna and Support

The omniantenna shall be structurally attached to the lunar capsule during the majority of flight. Following the terminal maneuver it is to be deployed to a 45 degree angle with the spacecraft roll axis.

To accomplish this, the omniantenna shall be rigidly mounted to an adapter which in turn shall seat on a flange ring on top of the lunar capsule. The adapter shall be held to the capsule by means of a Marmon-type clamp which is secured with a pin puller mounted on the adapter. To support the omniantenna in the deployed position a boom is required. This shall attach at its forward end to the adapter and to a rotary actuator at its aft end. The actuator is mounted to the forward plane of the spaceframe. To prevent any severe motions to the spacecraft attitude control system the actuating time for the boom shall be 60 ±5 seconds at 75 degrees F. The cables for both the omniantenna and the pin puller squibs shall be routed up the boom. The clamp, upon release, need not stay with the spacecraft and in turn must not collide with any spacecraft components.

3.6.5 Gamma Ray Spectrometer Boom

The boom is a pneumatic device consisting of three sliding tubes and one stationary tube mounted concentrically and sealed to retain internal pressure. The gamma ray spectrometer is mounted on the end of the innermost tube, and the outermost stationary tube is mounted on the spacecraft. Upon receipt of the actuation signal the innermost tube shall be released and the spectrometer shall be carried out and held in the extended position by the internal pressure. Extension of the spectrometer will reduce the background count in the instrument caused by proximity to the center of mass of the spacecraft, and will allow detection and measurement of the gamma rays sought by the experiment. The gamma ray spectrometer attached to the end of the boom shall be extended 72 ±3 inches along the axis of the boom upon actuation. The orientation of the experiment shall be maintained within 15 degrees of its nominal position. The boom upon extension

shall not induce vibration loads in excess of one "G" and shock loads in excess of 25 "G's" for two milliseconds upon the gamma ray detector. The boom must lock in position when extended and maintain a leak rate of less than 1 percent of the capability of the attitude control system.

4. DEFINITION OF SPACECRAFT COORDINATE SYSTEM

This section defines precisely the existing spacecraft coordinate system to be used in all mounting and machining, all dimensions, alignments, and tolerances referred to spacecraft coordinates.

The bases of this coordinate system are two planes. The primary reference plane is defined by three of the six spacecraft mounting feet, A, C, and E, as shown in figure 4-1. The secondary reference plane is the mounting plane of the attitude control assembly machined perpendicular to the primary reference plane within 0.005 "in 20".

The coordinate system consists of three mutually perpendicular reference lines ----- the pitch (X), yaw (Y), and roll (Z) reference lines ----- which form a conventional cartesian coordinate system. The roll reference line is defined normal to the primary reference plane with +Z aft, and it passes through the center of the basic bolt circle. The yaw reference line is defined parallel to the secondary reference plane with +Y opposite the directional antenna. The pitch reference line is then defined such as to form a right hand system. The reference lines intersect at the origin. The origin is located such that the primary reference plane becomes station Z = 500. These definitions are shown in figure 4-1.

Positive pitch, yaw, and roll angles and moments are defined as clockwise when looking from the origin along the positive reference lines. These are shown in figure 4-2.

This is a conventional right hand coordinate system in all respects.

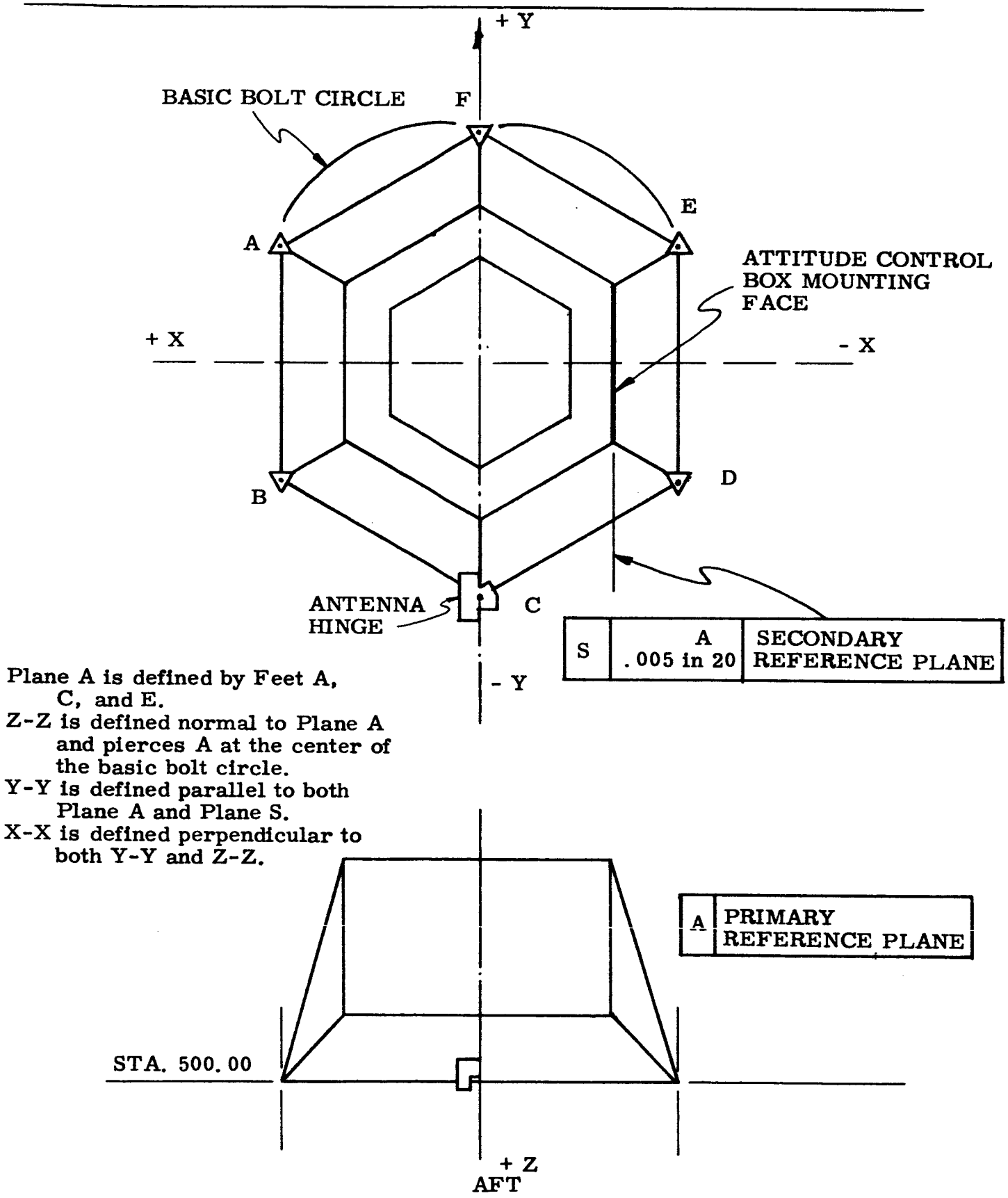

Figure 4-1. Spacecraft Reference Planes and Coordinates

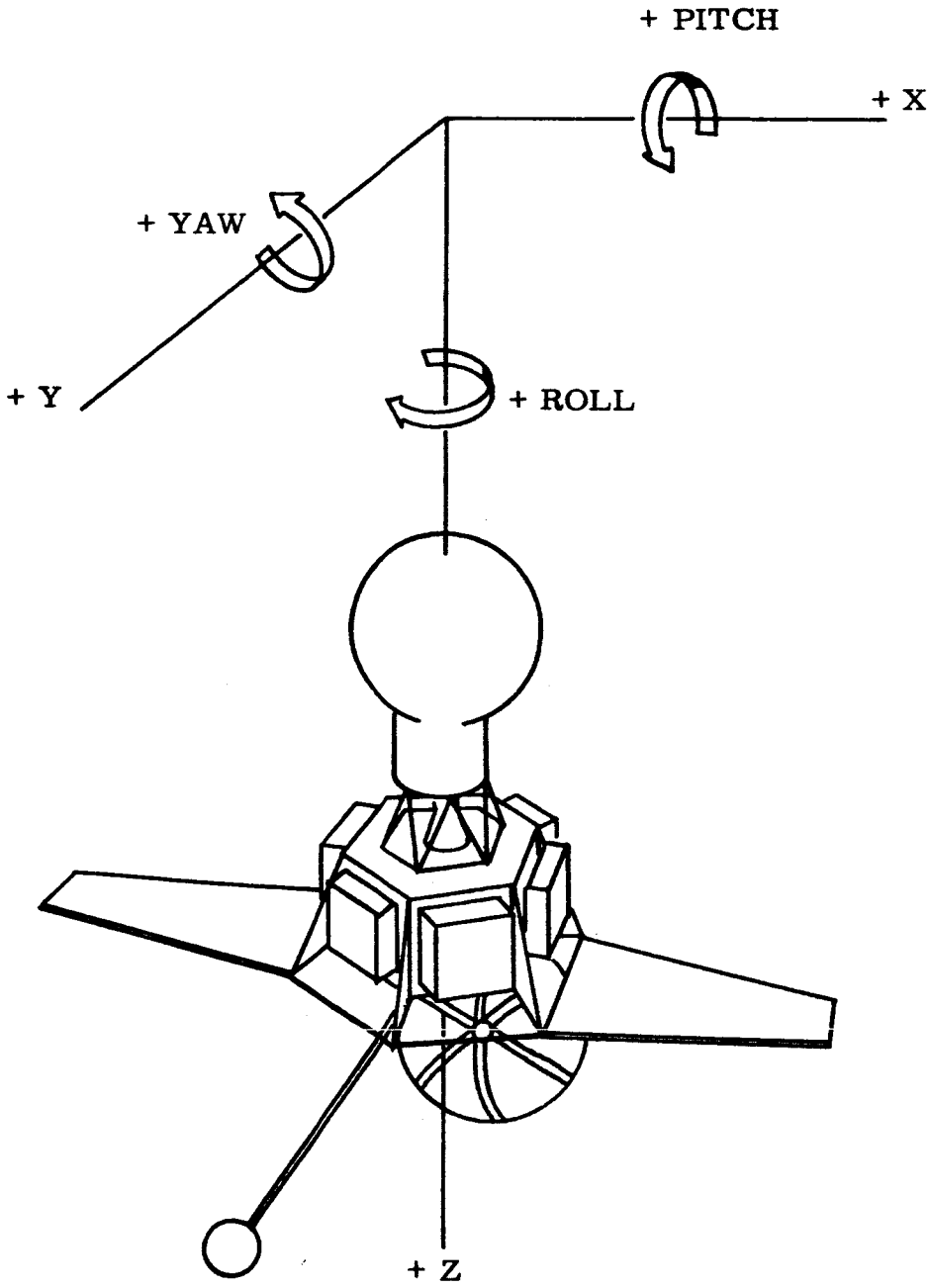

Figure 4-2. Angle and Moment Definition

(Insert in Spacecraft Design Specification Book)

APPROVED:

SYSTEM: M. R. Mesnard

SUBSYSTEM: J. M. Pherson

JET PROPULSION LABORATORY

Spec. No. RA 345-4-511 B
25 January 1962

SUPERSEDES:
RA 345-4-511 A
12 January 1962

FUNCTIONAL SPECIFICATION
SPACECRAFT RANGER RA-3 THROUGH RA-5
STRUCTURAL DESIGN CRITERIA

✱ DENOTES CHANGE

---

1. SCOPE

1.1 Scope

This specification establishes the basic structural design factors for the Ranger RA-3 through RA-5 spacecraft.

2. APPLICABLE DOCUMENTS

2.1 The following documents form a part of this specification:

SPECIFICATIONS

Jet Propulsion Laboratory

	Spacecraft Design Specification Book, Ranger RA-3, RA-4, and RA-5
30201	Environmental Specification, Ranger RA-3 through RA-5 Flight Equipment, Assembly Level Type Approval and Unit Acceptance Test Requirements.
30209	Vega Process Specification, Flight Equipment, Titanium Alloy 6 AL 4 V Compressed Gas Vessels, (Pressurized in the Vicinity of Personnel)

30232	Environmental Specification, Structural Qualification Test Requirements, Flight Equipment

Lockheed Missile Systems Division (LMSD)

446553	Agena B Booster, NASA Program

DRAWINGS

Jet Propulsion Laboratory

J-315 1740	RA-3, RA-4, and RA-5, JPL Interface and ADF Lunar Capsule
J-315 0103	RA-3, RA-4, and RA-5, Spacecraft Assembly Drawing
J-315 1703	RA-3, RA-4, and RA-5, Support, Spacecraft Assembly
J-315 8112	RA-3, RA-4, and RA-5, Panel, Solar Assembly Minus X-Axis
J-315 1050	RA-3, RA-4, and RA-5, Antenna, 4-foot Parabolic, Assembly
J-315 0703	RA-3, RA-4, and RA-5, Midcourse Propulsion Unit Assembly

Lockheed Missile Systems Division (LMSD)

361198	8096 Agena Engine Ignition and Cutoff Thrust Characteristics (Classified)

PUBLICATIONS

Military

MIL-HDBK-5	Strength of Metals, Aircraft Elements, March 1959

Lockheed Missile Systems Division (LMSD)

Report No. 361196	Mass Properties vs Flight Time for Atlas-Agena-Ranger Vehicle (Classified)
Report No. 361199	Mass Properties vs Flight Time for Atlas-Agena-Ranger Vehicle (Classified)
Report No. 361195	Mass Properties vs Flight Time for Atlas-Agena-Ranger Vehicle (Classified)
Report No. 361197	EI and AG Curves - Room Temperature (Classified)

Report No. 364774-TXA 440	Shroud/Spacecraft Thermal Relationship TAD 11
Report No. 447172/62-91	Final Report of NASA TAD 002 Study Agena/Spacecraft/Shroud Separation

3. REQUIREMENTS

3.1 General

The specifications, drawings, and publications listed under paragraph 2.1 are essential to the requirements of this specification since they define, in themselves, certain factors to be considered in the design of the spacecraft.

3.2 Design Load Determination

Design loads for the Ranger Spacecraft shall be based on the requirements set forth in this specification.

3.2.1 Limit Loads

Limit loads shall represent the maximum loads the structure is expected to experience under specified conditions of operation or use. All loads and load factors used in this document shall be limit loads unless otherwise noted.

3.2.2 Design Loads

A design load shall be a limit load multiplied by the appropriate hazard factor.

3.2.2.1 Hazard Factors

The hazard factors to be used in the design of the spacecraft, or any component, thereof, are presented in table 3.2.2.1 - I.

Table 3.2.2.1 - I

Item	Hazard Factor
All components except Pressure Vessels	1.0
Pressure vessels hazardous to personnel in the event of failure	1.76
Pressure vessels non-hazardous to personnel in the event of failure	1.0

3.2.2.2 Hazard Criteria (Gas vessels pressurized near personnel)

a. Vessels shall be fabricated from an approved tough, ductile material such as 6 AL 4 V titanium, annealed.

b. Limit load (pressure) must include the effects of temperature increases which may occur near personnel.

c. The minimum burst pressure shall be verified by at least three (3) hydrostatic burst tests in which pressure-volume data is obtained.

d. Material properties shall be verified and fabrication quality control shall be maintained by procedures designated in JPL Specification 30209.

3.2.2.3 Yield Design Loads

The yield design load shall be identical to the design load for the Ranger Spacecraft.

3.2.2.4 Ultimate Design Load

The ultimate design load shall be in the design load multiplied by 1.25.

3.2.3 Transient Loads

All loads of transient nature shall be considered. They shall include suddenly applied forces, acoustics, elastic deflections, and thrust variations during starting, steady operations, and cutoff during both Atlas and Agena phases of flight.

3.2.3.1 Dynamic Loads

Analysis of the dynamic loads of the spacecraft shall consider the loads induced by the elastic response of the spacecraft to the given excitation in addition to the rigid body response.

3.2.3.2 Vibration Loads

The spacecraft in its entirety and in its basic assemblies shall be designed and tested as required by the applicable vibration requirements of JPL Specification 30332.

3.3 Design Strength Criteria

The following criteria of yield and ultimate stress shall be used in the design and analysis of the Ranger Spacecraft.

3.3.1 Yield Strength

The stress in any element of the structure, subjected to a yield design load, shall not exceed the allowable yield stress. The entire structure and components shall be capable of withstanding the yield design load without permanent deformation.

3.3.2 Ultimate Strength

The stress in any element of the structure subjected to an ultimate design load, shall not exceed the ultimate allowable stress. The entire structure and components shall be capable of withstanding the ultimate design load without failure.

3.3.3 Stress Values

The allowable stress values used to substantiate the structural integrity of the spacecraft shall be those from an approved publication such as:

a. MIL-HDBK-5 Strength of Metal, Aircraft Elements

b. Specifications of the JPL Materials and Process Group, Section 353

3.3.4 Margins of Safety

Positive margins of safety shall be defined as the amount by which the ratio of the allowable load and the design load of the member exceeds the actual design load on the member. Margin of safety investigations shall be considered at both yield and ultimate load levels. Positive margins of safety shall be calculated in general as follows:

$$\text{M.S.} = \frac{\text{Allowable load (or allowable stress)}}{\text{Design load (or design stress)}} - 1 \geq 0$$

Where stresses along more than one axis are involved, the stress ratio and margin of safety calculations as presented in applicable document MIL-HDBK-5 shall be used. A margin of safety may be demonstrated by test instead of by analysis.

3.4 Fatigue Consideration

Special attention shall be given to the design of components in which fatigue failure is a major consideration, such as vessels subjected to repeated pressure cycles, and hardware adjacent to severe vibration sources. Caution shall be executed to avoid residual stresses, stress concentrations and poor surface finishes and under all circumstances the materials shall exhibit satisfactory fatigue characteristics.

3.5 Temperature Consideration

Consideration shall be given to deterioration of material properties due to prolonged temperature effects and to stresses and deformation caused by transient temperature effects.

3.6 Rigidity

Rigidity shall be provided to permit accomplishment of all flight conditions without structural deflections of a magnitude sufficient to jeopardize proper functioning of the spacecraft or any component, thereof. The fulfillment of the strength requirements under 3.3 shall not be deemed sufficient in themselves to satisfy this requirement.

3.6.1 Excessive Deflections

Deflections of a magnitude sufficient to jeopardize proper functioning shall be considered excessive if they:

a. Allow collisions between various spacecraft components

b. Allow collisions between the spacecraft envelope and any portion of the spacecraft

3.7 Design Conditions

The following environments shall be considered in the structural design of the Ranger Spacecraft. Those conditions considered to be critical in the structural design of the spacecraft are presented in detail in paragraph 3.8. Any conflict between requirements presented in this paragraph and those in paragraph 3.8 shall be decided in favor of those in paragraph 3.8.

3.7.1 Pre-launch

The following load conditions are presumed to exist prior to launch and shall be considered in the design of Ranger Spacecraft.

3.7.1.1 Ground Handling and Transportation

Loads resulting from ground handling or transportation shall be such that they do not exceed flight limit load.

3.7.1.2 Ground Tests

Loads resulting from ground testing or system testing are to be considered in the design of the Ranger Spacecraft. These considerations include:

a. In the System Test Fixture, the spacecraft is to be cantilevered at Station 500, and it may be oriented to any position.

b. The support structure is to be designed such that the spacecraft functioning equipment may operate in any possible orientation on the system test fixture. The functioning equipment on the Ranger Spacecraft is to consist of the booms, parabolic dish antenna and solar panels.

3.7.2 Launch to Spacecraft Separation

The following load conditions existing from launch to spacecraft separation shall be considered in the design of Ranger Spacecraft.

3.7.2.1 Maximum Longitudinal Acceleration

The maximum longitudinal acceleration is 7.0 g.

3.7.2.2 Vehicle Flight Maneuver Loads

Vehicle flight maneuver loads shall include loads resulting from programmed roll, programmed pitch, and vehicle correction resulting from wind disturbance, booster jettisoning, fuel sloshing, etc.

3.7.2.2.1 Maximum Pitch Acceleration

The maximum pitch acceleration to which the spacecraft is to be exposed is 3.7 rad/sec^2 and occurs at the termination of the second Agena stage of flight when the Agena engine is gimballed hard-over. This condition is concurrent with paragraph 3.7.2.2.3.

3.7.2.2.2 Maximum Roll Acceleration

The maximum roll acceleration to which the spacecraft is to be exposed is 0.2 rad/sec^2. This will occur during the Agena phase of flight when the roll control jets are operating.

3.7.2.2.3 Maximum Lateral Acceleration

The maximum steady-state lateral acceleration of the spacecraft center-of-gravity is evaluated at 0.5 g. This condition is concurrent with paragraph 3.7.2.2.1.

3.7.2.3 Vibration Environments

The following are the expected flight structural vibration environments existing at the spacecraft booster separation plane.

Longitudinal	0 - 1.5 g peak	2 - 250 cps
Lateral	0 - 0.5 g peak	2 - 250 cps

3.7.2.4 Separation Loads

Separation loads (both static and elastic dynamic) include loads induced in the spacecraft during the separations of the Atlas booster, Atlas sustainer stage, spacecraft shroud, and the Agena stage.

3.7.2.5 Temperature

Aerodynamic heating and solar radiation during the coasting orbit may cause the external structure to reach a maximum temperature of 250° F. The maximum time duration at this temperature is 1/2 hour. (See JPL Specification RA 345-4-540, Temperature Control Subsystem Functional Specification).

3.7.2.6 Pressure Changes

Consideration shall be given to the satisfactory venting of each structural component during the preinjection phase of flight in order to prevent failure caused by ambient pressure changes due to increase in altitude. A structure without satisfactory venting must be designed for an internal pressure.

3.7.3 Post Spacecraft Separation

The following load conditions existing after spacecraft separation are considered in the design of Ranger Spacecraft.

3.7.3.1 Attitude Control Loads

Loads imposed by the attitude control system are acceleration rates about the three control axis of a nominal 2×10^{-4} rad/sec^2. (See JPL Specification RA 345-4-430).

3.7.3.2 Midcourse Maneuver

The midcourse maneuver will remove or reduce injection dispersion errors. This is to be accomplished by using a liquid propellant engine.

3.7.3.2.1 Thrust Vector Control

Thrust vector control will be provided by four jet vanes capable of maximum pitch and yaw restoring moments about the vehicle center of gravity of 3.2 foot-pounds and a minimum roll moment of 0.1 foot-pounds. (See JPL Specifications RA 345-4-430 and RA 345-4-610).

3.7.3.3 Terminal Maneuver

The terminal maneuver is made so that the spacecraft roll axis will be parallel to the velocity vector of the spacecraft at capsule ejection and before impact with the moon. Loads imparted to the spacecraft are the same as those given in paragraph 3.7.3.1. (See JPL Specification RA 345-4-450).

3.7.3.4 Temperature

After injection, the expected temperature environment is in the range -50° F to +200° F. Some form of temperature control will be used for those components unable to tolerate this range of temperature. See JPL Specification RA 345-4-540 for a detailed list of components and their respective temperature ranges.

3.7.3.5 Actuating Equipment Loads

After the spacecraft is stabilized, care must be taken to see that equipment that is extended or moved does not induce loads or load rates that are in excess of the capabilities of attitude control system.

3.8 Design Factors

The following factors shall be used to design the Ranger Spacecraft. Weights (masses) used in design or analysis calculations for any structure shall be based on the weight (mass) of the structure plus any additional weight (mass) whose load may be transmitted through the structure.

3.8.1 Static Load Factors

The following load factors shall be used in the static design of the Ranger Spacecraft. Each load factor includes the maximum steady state acceleration and an appropriate allowance for dynamics, based on the design conditions given in paragraph 3.7.

3.8.1.1 Accelerations at Center of Gravity

The load factors indicated in table 3.8.1.1-I are the accelerations at the spacecraft center of gravity which are to be considered in the various phases of flight from prelaunch to post spacecraft separation.

3.8.1.2 Combination of Load Factors

The load factors in table 3.8.1.1-I shall be applied both alone and in planar combination in order to determine the most severe design condition.

3.8.1.3 Combined Loads

The load factor established in paragraph 3.8.1.1 is for maximum steady operation with appropriate allowance for dynamics. The loads due to following design constraints shall be superimposed upon the above load factors.

a. Paragraphs 3.7.2.5 and 3.7.3.4 - thermal requirements

b. Paragraph 3.7.2.6 - pressure changes due to altitude change

3.8.2 Dynamic Design Factors

The dynamic design of the Ranger Spacecraft structure shall be based on the following factors:

3.8.2.1 Rigidity Design of the Spacecraft

The rigidity of the spacecraft shall be such that excessive deflections do not result when the structure is subjected to structural vibration test given in JPL Specification 30232.

3.8.2.2 Local Resonances

Structures supporting individual scientific instruments and electronic components have their own local resonances. Care should be taken to see that the local resonances of the individual supporting structures do not coincide with the vehicle resonances and that individual instruments within close proximity of each other are different in resonance frequencies. Loads resulting from local structural resonances are in general included in table 3.8.1.1-I, but the loads in supporting structure should be verified by vibration test given in JPL Specification 30232, or JPL Specification 30201, whichever is applicable.

Table 3.8.1.1-I. Load Factors - Accelerations at Spacecraft Center of Gravity

Phase	Translational			Rotational		
	Longitudinal		Lateral			
	+Z(aft) g's	-Z(fwd) g's	g's	Pitch rad/sec^2	Yaw rad/sec^2	Roll rad/sec^2
Prelaunch	(Not to exceed flight limit loads)					
Launch to S/C Separation	10.0	3.0	2.0	2.5	2.5	0.3
Post S/C Separation						
Cruise Mode	0.1	0.1	0.1	0.15	0.15	0.15
Midcourse Maneuver	0.5	0.5	0.5	0.15	0.15	0.15

3.8.2.3 Deflection Criteria

The dynamic envelope is given by the spacecraft envelope and interface drawings in paragraph 2.1. Maximum allowable dynamic motion under the structural vibration test given in JPL Specification 30232 is 3.5 inches peak-to-peak of the tip of the solar panels and 7 inches peak-to-peak at omniantenna tip.

3.8.3 Midcourse Maneuver Frequencies

For the midcourse maneuver, all items different in configuration from the boost phase, such as booms, solar panels, etc., shall have a natural frequency above 1.5 cps.

3.8.4 Fatigue Design

Attention shall be given to the fatigue considerations outlined in paragraph 3.4. The satisfactory performance of a structure through all of the vibration tests prescribed in either JPL Specification 30232 or JPL Specification 30201 shall be deemed sufficient evidence of acceptable fatigue strength of the spacecraft configuration.

3.9 Weight

The weight which is adopted for Ranger 3, 4, and 5 spacecraft design is maintained in JPL Specification RA 345-4-120.

3.10 Coordinate Axes

The coordinate axis system shown in figure 3.10-1 is to be used for the orientation of the structural components.

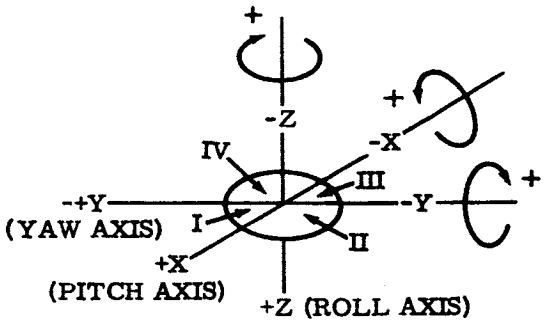

S/C - JPL
COORDINATE AXES SYSTEM

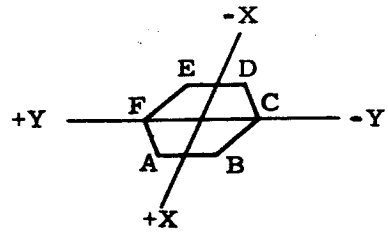

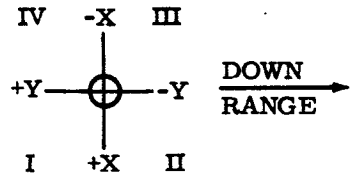

SECTION A-A
S/C - JPL

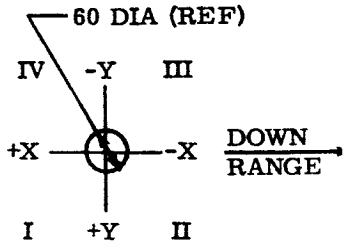

SECTION B-B
AGENA - LMSD

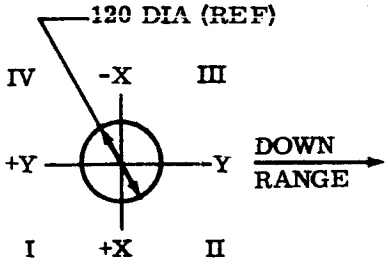

SECTION C-C
ATLAS - CONVAIR

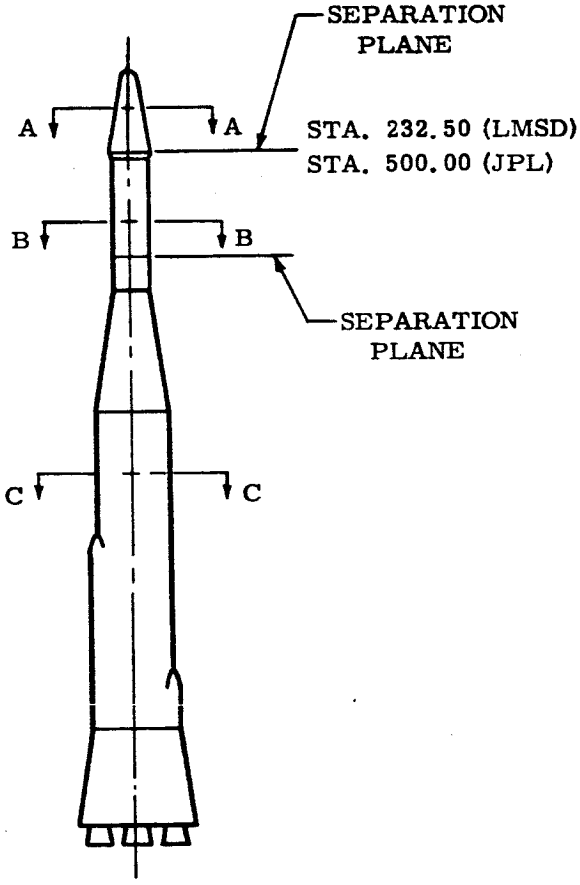

Figure 3.10-1 Coordinate Axes System

APPENDIX A

10. SOURCES OF INFORMATION

10.1 The sources of information used in this specification are as follows:

Jet Propulsion Laboratory

30331	Detail Specification, Vehicle System Integration Requirements and Restraints for Ranger Spacecraft RA-3 through RA-5
	Agena Study Report (Classified)

Lockheed Missile Systems Division

6117 A	General Environment Specification for Discoverer, Midas, and Sentry Programs
355991	Design Criteria, Qualification and Acceptance Test for Payload Packages
356765	SS 181 Flexible Flight Loads of Midas Follow-on Vehicle and Booster Combination
362201	SS 169 Vibration Data for Midas Follow-on
445823	Design Criteria, Qualification and Acceptance Test for Payload Packages
446128	Vehicle 1051 Flight Test Analysis
447004	Vehicle 1007 Flight Test Analysis
447041	Vehicle 1007 Flight Test Analysis
447223	SS 190 Vibration Data Analysis, Discoverer
447746	Preliminary Design Criteria, Qualification and Acceptance Tests for NASA Payload Packages, NASA Ranger

Convair Astronautics

AZS-55-007	Structural Design Criteria - Model 55
57-02400	Control Systems - Attitude, Missile Borne, Specification

(Insert in Spacecraft Design Specification Book)

APPROVED:

System: M. R. Mesnard

Subsystem: J. D. Quinn

JET PROPULSION LABORATORY

Spec. No. RA345-4-530 D
2 February 1962

✱ DENOTES CHANGE

SUPERSEDES:
RA345-4-530 C
20 October 1961

FUNCTIONAL SPECIFICATION
SPACECRAFT RA 3, 4, AND 5 FLIGHT EQUIPMENT
PYROTECHNIC SUBSYSTEM

1.0 SCOPE

This functional specification covers the Squib Firing Assembly of the extension system for Ranger Spacecraft RA 3, 4, and 5.

✱ 2.0 APPLICABLE DOCUMENTS

The latest issues of the following documents form a part of this specification:

SPECIFICATIONS

Jet Propulsion Laboratory

Spacecraft Design Specification Book, Ranger A3, A4, and A5

DRAWINGS

Jet Propulsion Laboratory

J 317 2298	Squib Firing Assembly Schematic Diagram

3.0 REQUIREMENTS

3.1 General

The initiation of the spacecraft and capsule pyrotechnic devices (squibs) is divided into seven time-separated events. At each event, one or more groups of squibs are to be initiated. The squib firing assembly shall be capable of receiving six similar control signals (one at each of six events) and of switching sufficient electrical energy to reliably initiate the squibs which are to be fired at that event. In addition, the squib firing assembly will furnish a voltage for the occurrence of the seventh event which is switched elsewhere. The squib firing assembly shall also prevent the occurrence of excessive power demands on the main spacecraft battery due to a post-fire short condition in a squib, and provide a safe-arm function for safety.

3.2 Power

Control power and squib initiation power shall be obtained from the main spacecraft battery. The squib firing assembly shall require a voltage between 23.5 and 20.0 volts (battery terminal voltage) and shall require a maximum of 25 amperes.

3.2.1 Control Power

Total control current required of the main battery shall be less than 0.25 ampere for less than 1.5 seconds for events 1 through 4. For event 5, the time shall be less than 2.8 minutes. For event 6, the time shall be less than 1.7 minutes.

3.2.2 Squib Initiation Power

The maximum power required for squib initiation shall be 25 amperes at event 1, and 16 amperes at subsequent events (see table I).

3.3 Triggering

The control trigger required at each of the first six events shall be supplied by the central computer and sequencer (CC&S) (or by the command system for event 6). The triggering at each event shall be accomplished by the closure of one set of normally open contacts. DC voltage shall be obtained from the main battery, routed from the squib firing assembly to the contacts and upon contact closure, back to the squib firing assembly. Current drawn through the contacts shall be less than

0.100 ampere per contact, with a rise rate of less than 50 ma/microsecond, or less than 150 ma with a rise rate of less than 0.25 ma/microsecond. The normally closed (reset) contacts in the CC&S shall be tied to the dc return supplied from the squib firing assembly (except for event 6). Event 6 may be initiated by the command system. The SFA shall be capable of delivering sufficient current to actuate the thermal relays associated with this event, with a minimum trigger-on time of 100 milliseconds.

3.3.1 Event 5 Delay

The CC&S command (SC-6) for event 5 will be delivered at C + 21.5 minutes to C + 29 minutes. After receiving this command, the squib firing assembly shall insert a 2.0 ± 0.2 minute delay before delivering initiation current to one squib on the vidicon cover latch and to both squib actuated bolt cutters on the altimeter antenna deployment device. The SFA shall insert a 2.5 ± 0.2 minute delay on the redundant timing channel before delivering initiation current to the redundant squib on the vidicon cover latch and to both squibs on the low-gain antenna deployment latch.

3.3.2 Event 3 Actuating Time

For event 3 (midcourse motor shutoff), the time period between the receipt of the CC&S command and the delivery of current to the squibs shall be less than 10 milliseconds and repeatable within ± 5 milliseconds.

3.4 Cabling

Total loop resistance between the main spacecraft battery terminals and the squib firing assembly shall be less than 0.06 ohm. Total loop resistance between the squib firing assembly and any given squib location shall be less than 0.25 ohm. Readily accessible connections to each squib harness shall be provided for safety and continuity checking.

3.5 Redundancy

All actuation devices except the altimeter antenna bolt cutters and the low-gain antenna latch shall be supplied with two independent electrical squib initiation circuits. Redundancy shall start at the input of, and be within the pyrotechnic subsystem. For events 2 and 3 on RA 3 and RA 4, where redundant squibs are not used, the redundancy within the squib firing assembly shall terminate at the input to the current-limiting resistor.

3.6 Output

At a given event, each squib to be initiated shall be supplied with not less than 125 percent of the rated all-fire current value for a period of 0.85 ± 0.15 seconds, assuming the worst combination of conditions as defined in this specification. This current shall be supplied to the remaining squibs, even though one-third of the squibs have shorted. The current delivered to each squib under nominal conditions shall be in the order of

145 percent of the rated all-fire current value, and shall be supplied for 0.85 ± 0.15 seconds. The loads seen by the squib firing assembly are shown in table I.

3.7 Safe-Arm Function

The control voltage supplied to the CC&S and the squib firing voltage shall be routed through a safe-arm circuit within the squib firing assembly. This circuit shall be armed by actuation of either of a pair of inertia switches. The arming of the circuit shall occur when an acceleration of 4.5 g occurs for 3.4 seconds or longer; the circuit shall not arm with less than 2.5 g applied indefinitely.

The "safed" voltage shall be routed to the fusing switch in the altimeter capsule system for the occurrence of event 7 and shall not be switched by the squib firing assembly.

3.8 Weight

The weight of the squib firing assembly shall be a minimum, not to exceed the allocation in the current issue of the Design Parameter Functional Specification RA345-5-120.

3.9 Telemetry

The squib initiation current, including that supplied to the fusing switch, shall be routed through the primary of a toroidal transformer. The secondary of this transformer shall be routed to the data encoder to give indication of current delivery at events 1, 2, 3, 4, 5A, 5B, 6, and 7 (see table I) on binary channel B2(2) - code 1100.

The output of the SFA current-transformer secondary at each event shall be a positive voltage spike of 12 to 20 volt peak amplitude with rise time of less than 1 microsecond to 12 volts.

Table I

SFA Event	Time: Command Given	Time: SFA Output Pulse Delivered	Function	Device Actuated: Type	Device Actuated: Quan.	Device Actuated: No. of Squibs Actuated per Device	Squib Characteristics: No. of Bridge-wires per Squib or Relay	Squib Characteristics: Total No. of Bridge-wires	Squib Characteristics: Bridgewire Resistance (ohm)	Squib Characteristics: No-Fire Current (amp)	Squib Characteristics: All-Fire Current (amp)	Squib Characteristics: Min Current Per Bridgewire (amp)	Maximum Total Current Required (Battery Terminal Voltage: 20.0 VDC): Midcourse Motor Burn Greater Than 1 Sec.: Peak (25 ms) (amp)	Midcourse Motor Burn Greater Than 1 Sec.: Ave. (1 sec.) (amp)	Midcourse Motor Burn Equal 50 Millisec.: Peak (25 ms) (amp)	Midcourse Motor Burn Equal 50 Millisec.: Ave. (1 sec.) (amp)	SPACECRAFT APPLICABILITY RA -
1	A+30 M) (CC&S A-2)		Solar Panel Deployment	Pin Puller	4	2	1	8	1.5±0.3	0.5	2.0	2.5	23	11	NA	NA	3.4.5.6.7.8.9
2	B+26.5 M) (CC&S B-3)		Midcourse Motor Ignition	Valve	3	1	1 2	3 6	0.67±0.13	0.5	2.0	3.0 2.5	10 16	4 6	NA	NA	3.4 5.6.7.8.9
3	B+26.5M +0.05S to B+27.5M	(+.005±.005)S	Midcourse Motor Shutoff	Valve	2	1	1 2	2 4	0.67±0.13	0.5	2.0	3.0 2.5	6 11	3 4	10 16	8 11	3.4 5.6.7.8.9
4	B+2.5 H) (CC&S B-7)		γ-Ray Boom Deployment Spare	Pin-Puller	1	2	1	2 2	1.5±0.3	0.5	2.0	2.5	8	3	NA	NA	3.4 (5) LC (5)TV 6.7.8.9
5A to 5B	(C+21.5M (C+29M (CC&S C-2)	(+2.0±0.2)M (+2.5±0.2)M	Altimeter Antenna Deploy Vidicon Lens Cover Lo-Gain Antenna Deploy Vidicon Lens Cover	Bolt Cutter Pin Puller Pin Puller Pin Puller	2 1 1 1	1 1 2 1	1 1 1 1	2 1 2 1	1.0±0.3 1.5±0.3 1.5±0.3 1.5±0.3	0.5 0.5 0.5 0.5	2.0 2.0 2.0 2.0	2.5 2.5 2.5 2.5	10 10	4 4	NA NA	NA NA	3.4.(5) LC
6	(I-60±39.4S) (CC&S C-3 or RWV or C/D: RTC-7)		Altimeter Turn On Sci. Commutation Init.	Thermal Relay Thermal Relay	1 1	- -	1 1	1 1	1.35±0.15 1.35±0.15	0.8 0.8	1.2 1.2	3.7 3.7	10 amp for 100 ms		NA	NA	3.4.(5) LC
7	(I-8.1S)		Capsule Separation Capsule P & SA Timer Start	Bolt Cutter Squib Switch	4 2	1 1	1 1	4 2	1.0±0.3 7±2	0.5 0.07	2.0 0.7	2.1 0.9	12 amp for 100 ms		NA	NA	3.4.(5) LC

(Insert in Spacecraft Design Specification Book)

APPROVED:

System: M. R. Mesnard
M.R. Mesnard

Subsystem: L. B. Katter
B. Katter

JET PROPULSION LABORATORY

Spec. No. RA345-4-540
11 January 1961

FUNCTIONAL SPECIFICATION

TEMPERATURE CONTROL SYSTEM

RANGER SPACECRAFT

1.0 SCOPE

This specification covers the general and special functional requirements for the Ranger Spacecraft temperature control system. Definition of the system and system boundaries is also presented.

2.0 DESCRIPTION

The temperature control system is comprised of all surface finishes and radiation shields employed to maintain the temperature within an acceptable range for subassemblies, assemblies, and components of the Ranger Spacecraft.

3.0 REQUIREMENTS

3.1 General

Temperature control of the spacecraft requires a cognizance of thermal design philosophy at all levels of system design, i.e., component, subassembly, assembly, and system. Therefore, certain of the requirements covered in this specification are pertinent to the packaging and grouping of components and subassemblies and should be used as guidelines wherever possible. Responsibility

for the temperature control system as defined in this specification shall begin at the assembly level with the specification of the exterior surface finish and include all temperature control provisions external to the assembly sufficient to maintain assembly surface temperature within specified limits.

3.2 Temperature Control

The temperature control system shall maintain the surface temperature of all temperature sensitive components within a specified temperature range over the intended life of the component and all anticipated conditions of use.

3.3 Fluids

The execution of temperature control shall not require the use of circulating or statically contained fluids.

3.4 Electrical Power Dissipation

The electrical power dissipated in electronics (or other) equipment attached to either the primary or secondary "hex" structure shall be distributed among the various boxes as uniformly as practical. Furthermore, the electrical power dissipated within each individual assembly shall be distributed within that assembly as uniformly as practical.

3.5 Conduction Paths

Good thermal conduction paths shall be provided between subassemblies and the assembly chassis (box).

3.6 Shade

Components requiring temperature control shall not be entirely shaded when the spacecraft is in the sun-oriented attitude. Exception to this requirement can be made (if necessary) when the ratio of electrical power dissipated to emitting surface area has values exceeding 4 watts per square foot continuously, or if the component's environment is such that additional temperature control is not required.

3.7 Transient

The temperature control system shall be capable of maintaining component temperatures within specified limits during periods in which the spacecraft is not sun-oriented, provided such periods do not exceed 1.0 hour.

3.8 Component Surfaces

A specified surface finish or treatment may be required on all components or assemblies which require temperature control.

3.9 Structure

Temperature control of the spacecraft structure shall be provided as needed to keep thermal distortion within specified limits.

(Insert in Spacecraft Design Specification Book)

APPROVED:
System: M. R. Mesnard
Subsystem: Bruce W. Schmitz

JET PROPULSION LABORATORY

Spec. No. RA345-4-610A
15 March 1962
SUPERSEDES:
RA345-4-610
25 August 1960

FUNCTIONAL SPECIFICATION
RANGER RA3, RA4, & RA5 SPACECRAFT
MIDCOURSE PROPULSION SYSTEM

REVISED & REWRITTEN

1.0 SCOPE

This functional specification covers the midcourse propulsion system for the RA3, RA4, and RA5 spacecraft. This specification relates to other spacecraft systems only to the extent of detailing the functions which the midcourse propulsion system must perform in conjunction with other spacecraft systems.

2.0 APPLICABLE DOCUMENTS

2.1 The following documents form a part of this specification.

SPECIFICATIONS

Jet Propulsion Laboratory

Spacecraft Design Specification Book
Ranger A3, A4, & A5.

DRAWINGS

Jet Propulsion Laboratory

J 315 1744	Structure, Midcourse Propulsion Unit, Installation
D 315 7300	Midcourse Propulsion System, Monopropellant-Hydrazine, Schematic (50-pound thrust)

3.0 REQUIREMENTS

3.1 General

The midcourse propulsion system function is to remove or reduce injection dispersion errors. At the time of the midcourse maneuver (16 or 40 hours after launch for the RA3 Lunar impact trajectory) the spacecraft is directed to turn to a prescribed position in space whereupon the midcourse propulsion system imparts a corrective impulse.

3.2 Design requirements

The following design requirements for the midcourse propulsion system are a result of spacecraft physical and operational restraints, Agena injection guidance accuracies, and ground and inflight environment conditions.

a. The unit will have the capability (by virtue of the propellant tank size) of imparting to the spacecraft a velocity increment of at least 120 feet per second.

b. The unit must be capable of vacuum environment storage in excess of 50 hours.

c. The unit must ignite and operate in a hard vacuum environment.

d. The unit must undergo ignition and operate in a gravitationless environment.

e. The propulsion system must be capable of one ignition and one termination.

f. The rocket engine nominal thrust shall be 50 pounds (vacuum) and shall be predictable to within ±5 percent.

g. The propulsion system shall be capable of operating between +35°F and 125°F. However, it is desired that the temperature environment after the vehicle is fully assembled and during the launch countdown be maintained such that the minimum propellant temperature shall not go below 65°F. This requirement is necessitated by the present uncertainty in the in-flight spacecraft temperature environment. This uncertainty might result in a propulsion system temperature below +35°F at the time of firing if the propellant were not at least 65°F at launch.

h. The spacecraft shall be essentially stationary in attitude (not spinning).

i. The volume within the spacecraft available to the propulsion system consists of the volume bounded on the sides by the internal hexagonal structure supporting the electronic chassis; on the top by the upper surface of the hexagonal compartment (capsule mounting plane); and on the bottom by an imaginary plane several inches below the lower surface of the hexagonal compartment consistant with the closed position of the antenna.

j. The thrust axis of the rocket motor must nominally coincide with the spacecraft roll reference line and be laterally adjustable upon assembly within a two-inch diameter circle about this reference line.

k. The effective thrust vector shall be predictable to within a 0.1 degree angular displacement and 1/16 inch lateral offset of the geometrical motor centerline.

l. Thrust vector control shall be provided by four (4) jet vanes capable of a maximum pitch and yaw restoring moment about the vehicle center of gravity of 3.2 foot-pounds and a minimum roll moment of 0.1 foot-pounds.

4.0 SYSTEM DESCRIPTION

A schematic of the midcourse propulsion system is shown in figure 1. The system utilizes a liquid monopropellant, anhydrous hydrazine, as the propellant. It is functionally a regulated-gas-pressure-fed-constant-thrust rocket. Principle system components consist of a high-pressure gas reservoir, a gas pressure regulator, a propellant tank, and a rocket engine. The rocket engine contains a quantity of catalyst to accelerate the decomposition of hydrazine. Explosively actuated valves are used throughout the system. Normally closed explosively actuated valves are activated to initiate nitrogen pressurization of the propellant tank, to initiate propellant flow to the rocket engine, and to release nitrogen tetroxide from the engine ignition cartridge. Normally open explosively actuated valves are activated to terminate nitrogen pressurization of the propellant tank and propellant flow to the rocket engine. On RA5 only, dual bridge-wire pyrotechnics will be used in each explosively actuated valve for the purpose of attaining a higher degree of reliability.

The design and operational philosophy of the system represented in figure 1 is directed toward maximizing system reliability and reproducibility, minimizing preflight handling and spacecraft interactions, minimization of inflight electrical signals, and minimization of system components. In order to avoid electrical or mechanical sequencing, the propellant tank is prepressurized with nitrogen during the preflight operation so that engine ignition and regulated nitrogen pressurization of the propellant tank can occur simultaneously through one signal from the CC&S. Similarly, only one signal is necessary for thrust termination; therefore a total of two (2) signals are required by the midcourse propulsion system for impulse initiation and termination.

A nominal engine performance summary is given in table I, and nominal system pressures and temperatures are shown in tables II and III, respectively.

5.0 INFLIGHT OPERATION

The firing of the midcourse propulsion system is controlled by the CC&S which receives the time, direction, and magnitude of the midcourse firing through the ground communication link. After the spacecraft has assumed the correct firing attitude (maneuver being executed at either 16 or 40 hours after launch), the midcourse propulsion system is ignited (at the prescribed time) through an electrical signal from the CC&S. Inasmuch as the propellant tank is prepressurized, the rocket engine ignition can occur concomitantly with the release of the high pressure nitrogen to the regulator without allowing time for the propellant tank pressures to build up to the normal operating level. Thrust termination is controlled by the CC&S via an electrical signal once the specified velocity increment has been realized as computed by the spacecraft integrating accelerometer. During the rocket engine firing, spacecraft attitude is maintained by the autopilot-controlled jet vane actuators.

The specific sequence of events for the propulsion system subsequent to spacecraft orientation and up to thrust termination are as follows:

a. At the command signal from the CC&S to ignite the rocket, normally closed explosive valves ⟨15⟩, *⟨8⟩ and ⟨4⟩ are activated allowing regulated nitrogen pressurization of the propellant tank, propellant flow to the rocket engine, and injection of a small quantity of nitrogen tetroxide to the rocket engine. (*Refer to Figure 1)

b. Hypergolic ignition ensues, followed by continuous catalytic monopropellant decomposition of the anhydrous hydrazine.

c. At the command signal from the CC&S to terminate rocket thrust, normally open explosively actuated valves ⟨7⟩ and ⟨21⟩ are activated, terminating propellant flow to the rocket engine and positively isolating the remaining pressure in the nitrogen sphere from the propellant tank.

Table I

Nominal Engine Performance
Summary
(Without Jet Vanes)

Vacuum Specific Impulse, $I_{s_{vac}}$	230 $\frac{\text{pounds-second}}{\text{pound}}$
Vacuum Thrust, F_{vac}	50.0 pounds
Propellant Flow Rate, $\dot{w}$	0.217 pounds per second
Characteristic Velocity, c^*	4250 feet per second
Vacuum Thrust Coefficient, $C_{F_{vac}}$	1.741
Chamber Stagnation Pressure, p_c	191.5 psia
Throat Area, A_t	0.15 square inch
Expansion Ratio, ϵ	44
Specific Heat Ratio, $\bar{\gamma}$	1.27

Table II

Nominal System Pressures

Item	Nominal Pressure Psia
Nitrogen Reservoir, at Ignition	3,000
Nitrogen Reservoir, at Termination (maximum duration run)	940
Propellant Tank, Prepressurization	275
Propellant Tank, Operating	320
N_2O_4 Ignition Cartridge, at Ignition	350
N_2O_4 Ignition Cartridge, at Termination	210
Chamber Pressure, Average*	200

*Represents stagnation pressure at midpoint of thrust chamber and catalyst bed.

Table III

Nominal System Temperatures

Item	Nominal Temperature °F
Nitrogen Reservoir, at Ignition	70
Nitrogen Reservoir, at Termination (maximum duration run)	-20
Propellant Tank	70
Thrust Chamber Wall	1800-1900

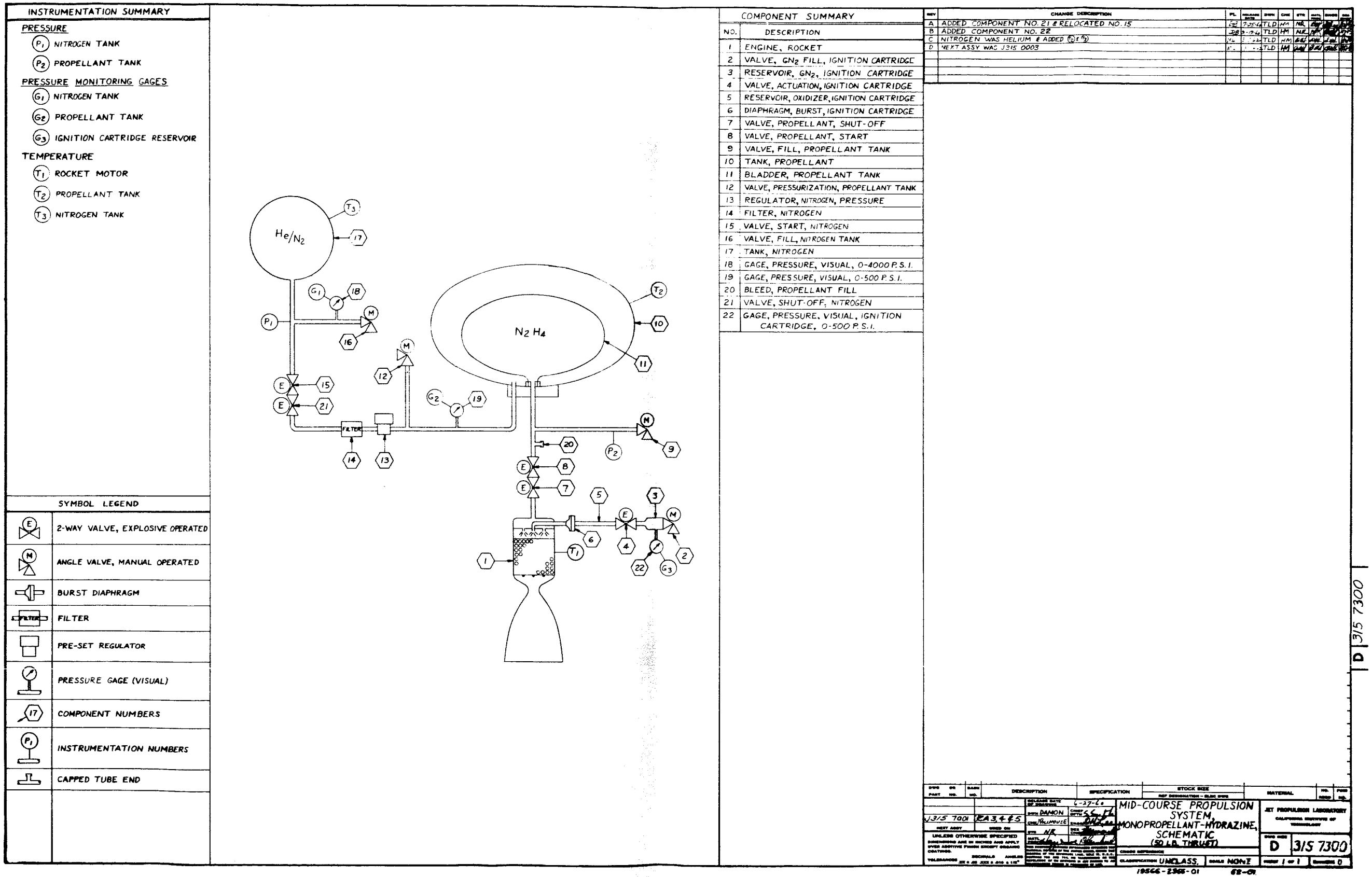
INSTRUMENTATION SUMMARY
PRESSURE
P1 NITROGEN TANK
P2 PROPELLANT TANK
PRESSURE MONITORING GAGES
G1 NITROGEN TANK
G2 PROPELLANT TANK
G3 IGNITION CARTRIDGE RESERVOIR
TEMPERATURE
T1 ROCKET MOTOR
T2 PROPELLANT TANK
T3 NITROGEN TANK
SYMBOL LEGEND
2-WAY VALVE, EXPLOSIVE OPERATED
ANGLE VALVE, MANUAL OPERATED
BURST DIAPHRAGM
FILTER
PRE-SET REGULATOR
PRESSURE GAGE (VISUAL)
COMPONENT NUMBERS
INSTRUMENTATION NUMBERS
CAPPED TUBE END
He/N2
N2 H4
FILTER
COMPONENT SUMMARY
NO. DESCRIPTION
1 ENGINE, ROCKET
2 VALVE, GN2 FILL, IGNITION CARTRIDGE
3 RESERVOIR, GN2, IGNITION CARTRIDGE
4 VALVE, ACTUATION, IGNITION CARTRIDGE
5 RESERVOIR, OXIDIZER, IGNITION CARTRIDGE
6 DIAPHRAGM, BURST, IGNITION CARTRIDGE
7 VALVE, PROPELLANT, SHUT-OFF
8 VALVE, PROPELLANT, START
9 VALVE, FILL, PROPELLANT TANK
10 TANK, PROPELLANT
11 BLADDER, PROPELLANT TANK
12 VALVE, PRESSURIZATION, PROPELLANT TANK
13 REGULATOR, NITROGEN, PRESSURE
14 FILTER, NITROGEN
15 VALVE, START, NITROGEN
16 VALVE, FILL, NITROGEN TANK
17 TANK, NITROGEN
18 GAGE, PRESSURE, VISUAL, 0-4000 P.S.I.
19 GAGE, PRESSURE, VISUAL, 0-500 P.S.I.
20 BLEED, PROPELLANT FILL
21 VALVE, SHUT-OFF, NITROGEN
22 GAGE, PRESSURE, VISUAL, IGNITION CARTRIDGE, 0-500 P.S.I.
REV CHANGE DESCRIPTION
A ADDED COMPONENT NO. 21 & RELOCATED NO. 15
B ADDED COMPONENT NO. 22
C NITROGEN WAS HELIUM & ADDED
D NEXT ASSY WAS J315 0003
MID-COURSE PROPULSION SYSTEM, MONOPROPELLANT-HYDRAZINE, SCHEMATIC (50 LB. THRUST)
JET PROPULSION LABORATORY
D 315 7300
J315 7001
RA3,4 & 5
UNLESS OTHERWISE SPECIFIED
CLASSIFICATION UNCLASS.
SCALE NONE
19566-2365-01
D 315 7300

Figure 1

(Insert in Spacecraft Design Specification Book)

APPROVED:

System: M. R. Mesnard

JET PROPULSION LABORATORY

Spec. No.
RA 345 Appendix I
Revision A
25 August 1961
SUPERSEDES:
Appendix I
(J 315 9220 B)

RA-3, 4, & 5 SPACECRAFT

INBOARD PROFILES

1.0 DESCRIPTION OF ATTACHED DRAWINGS

The JPL-Lockheed dynamic envelope for Ranger 3, 4, and 5 is shown on page 2. This includes information concerning the capsule under dynamic conditions.

The JPL-Aeronutronics dynamic envelope will be shown in a later revision to this appendix.

The overall interface assembly of the spacecraft is shown on page 3.

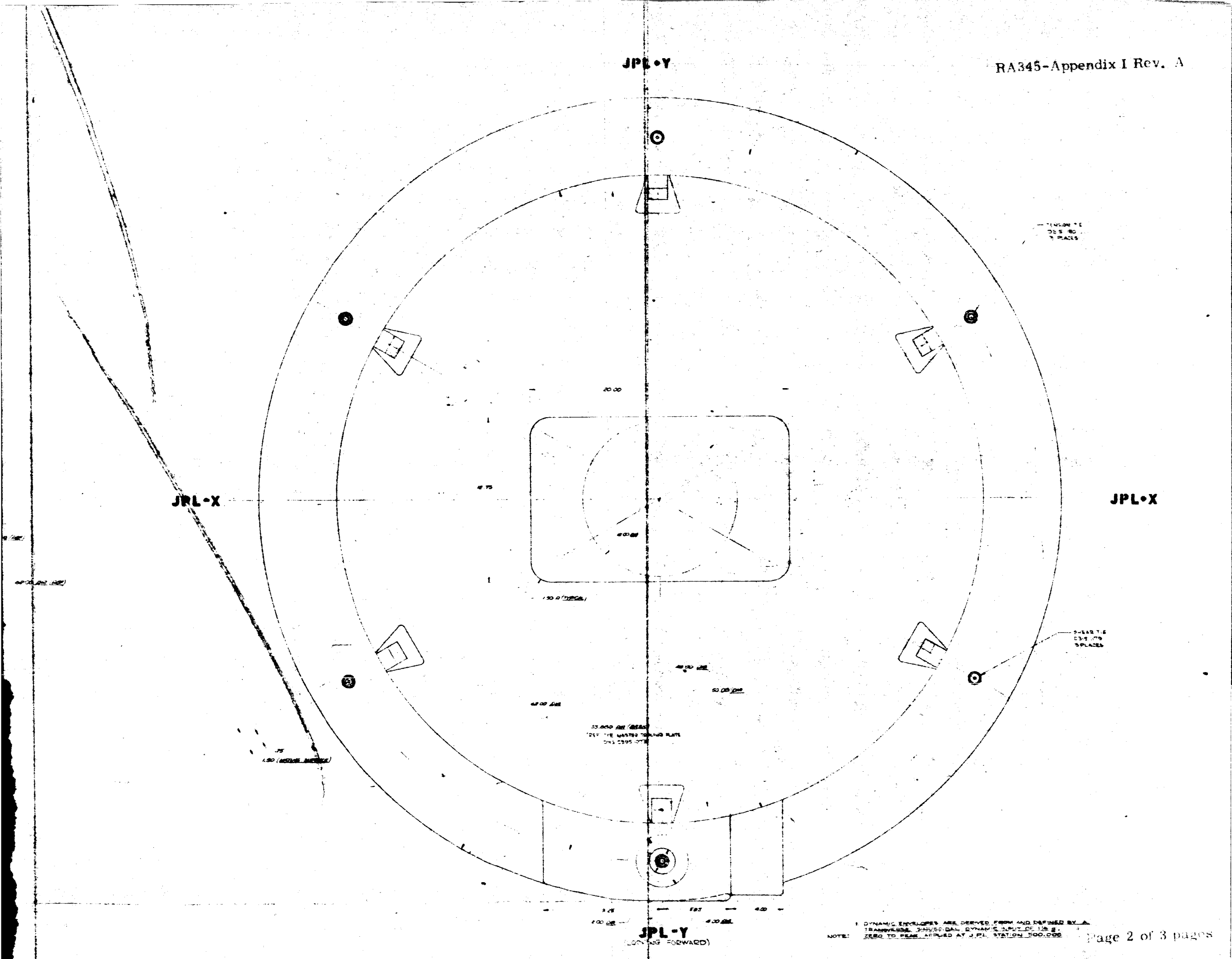
JPL•Y
JPL•X
JPL•X
JPL-Y
(LOOKING FORWARD)
NOTE:
1. DYNAMIC ENVELOPES ARE DERIVED FROM AND DEFINED BY A TRANSVERSE SINUSOIDAL DYNAMIC INPUT OF 1/2 g, ZERO TO PEAK APPLIED AT J.P.L. STATION 500.000

40.00 DIA
7.00 DIA
16.375 DIA
7.97
16.00 MINIMUM

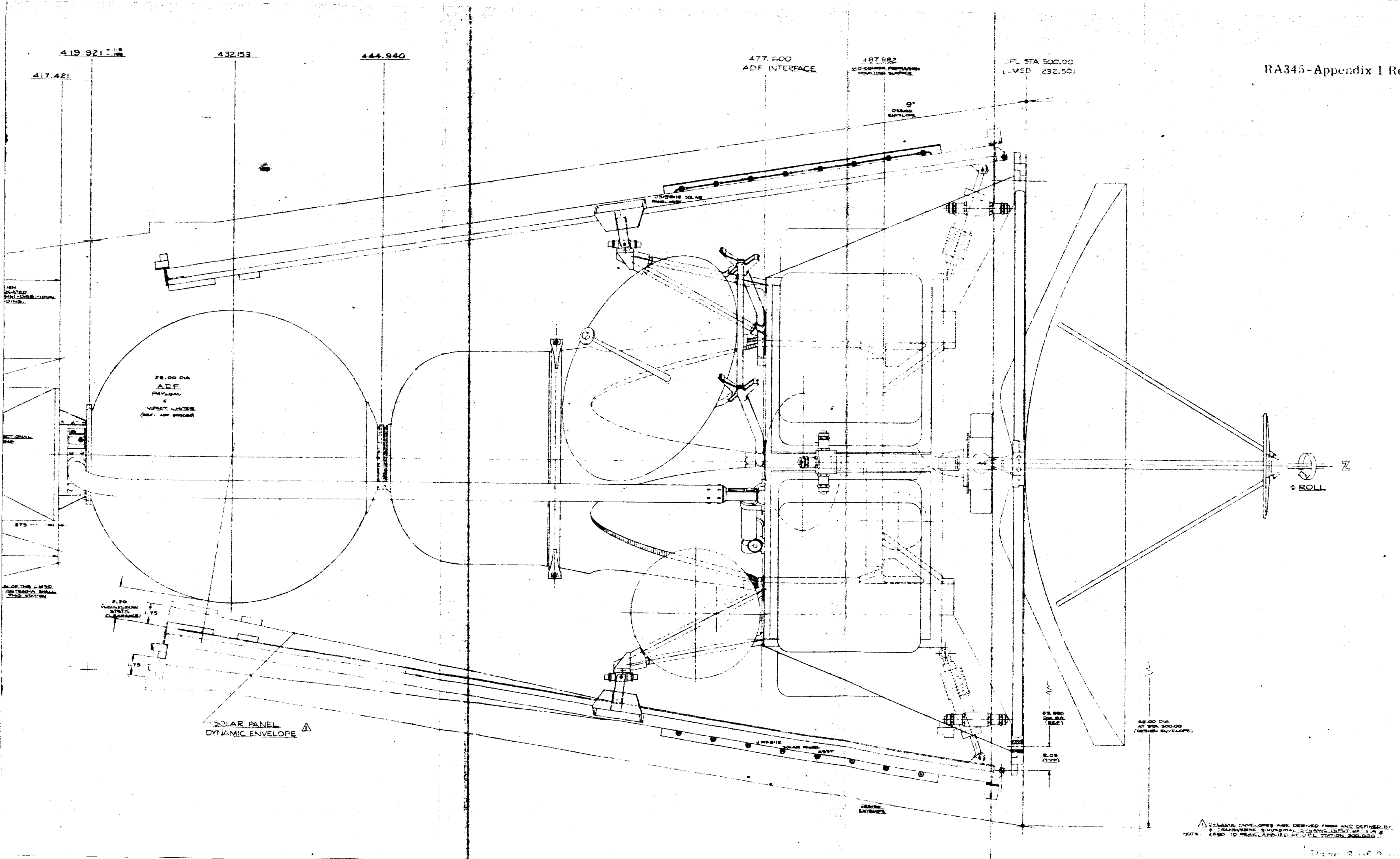

NOTE: DYNAMIC ENVELOPES ARE DERIVED FROM AND DEFINED BY A TRANSVERSE, SINUSOIDAL DYNAMIC INPUT OF 1.25 g ZERO TO PEAK, APPLIED AT JPL STATION 500.000.

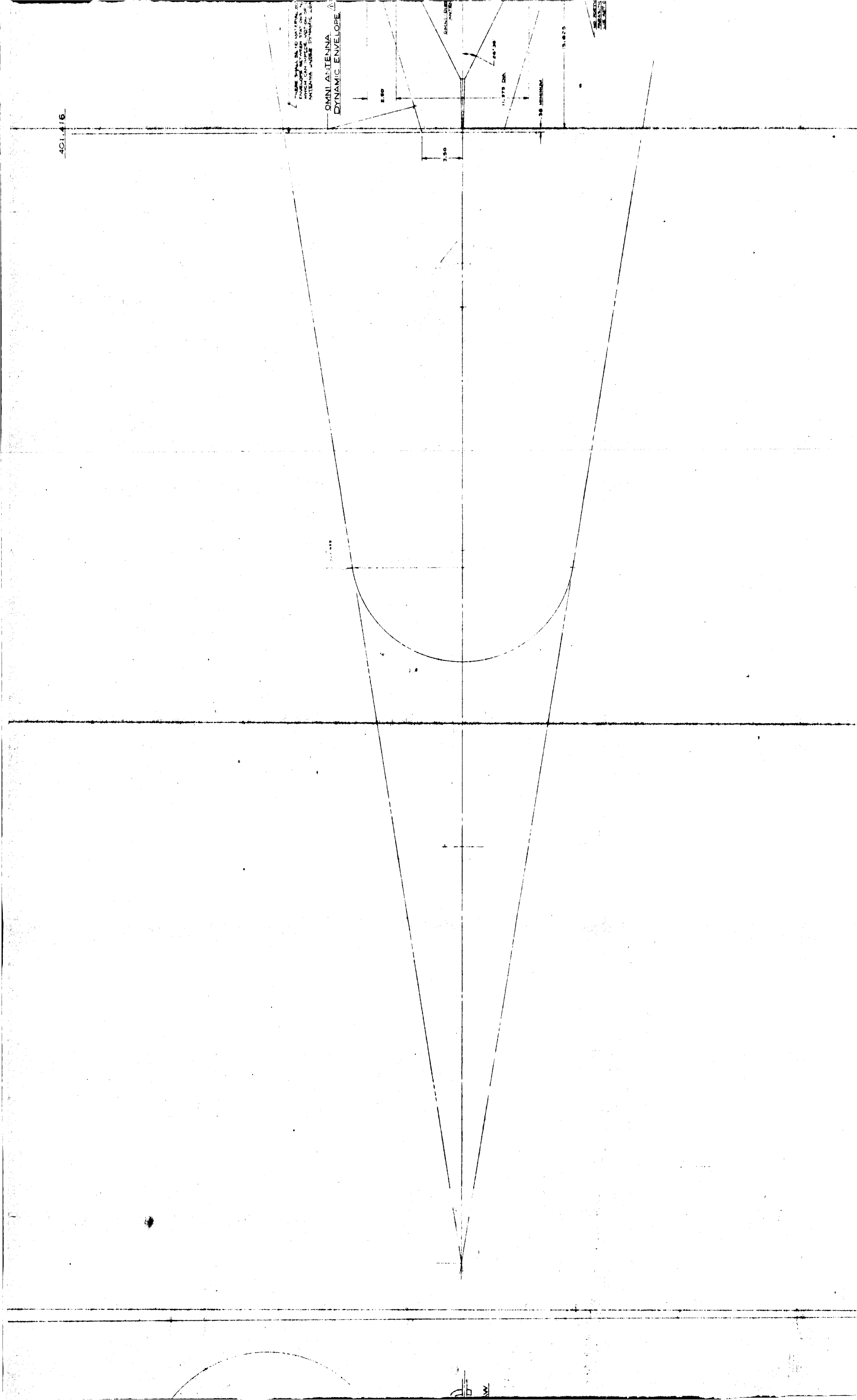

401.416
OMNI ANTENNA
DYNAMIC ENVELOPE
2.80
3.50
11.375 DIA
.38 MINIMUM
15.625

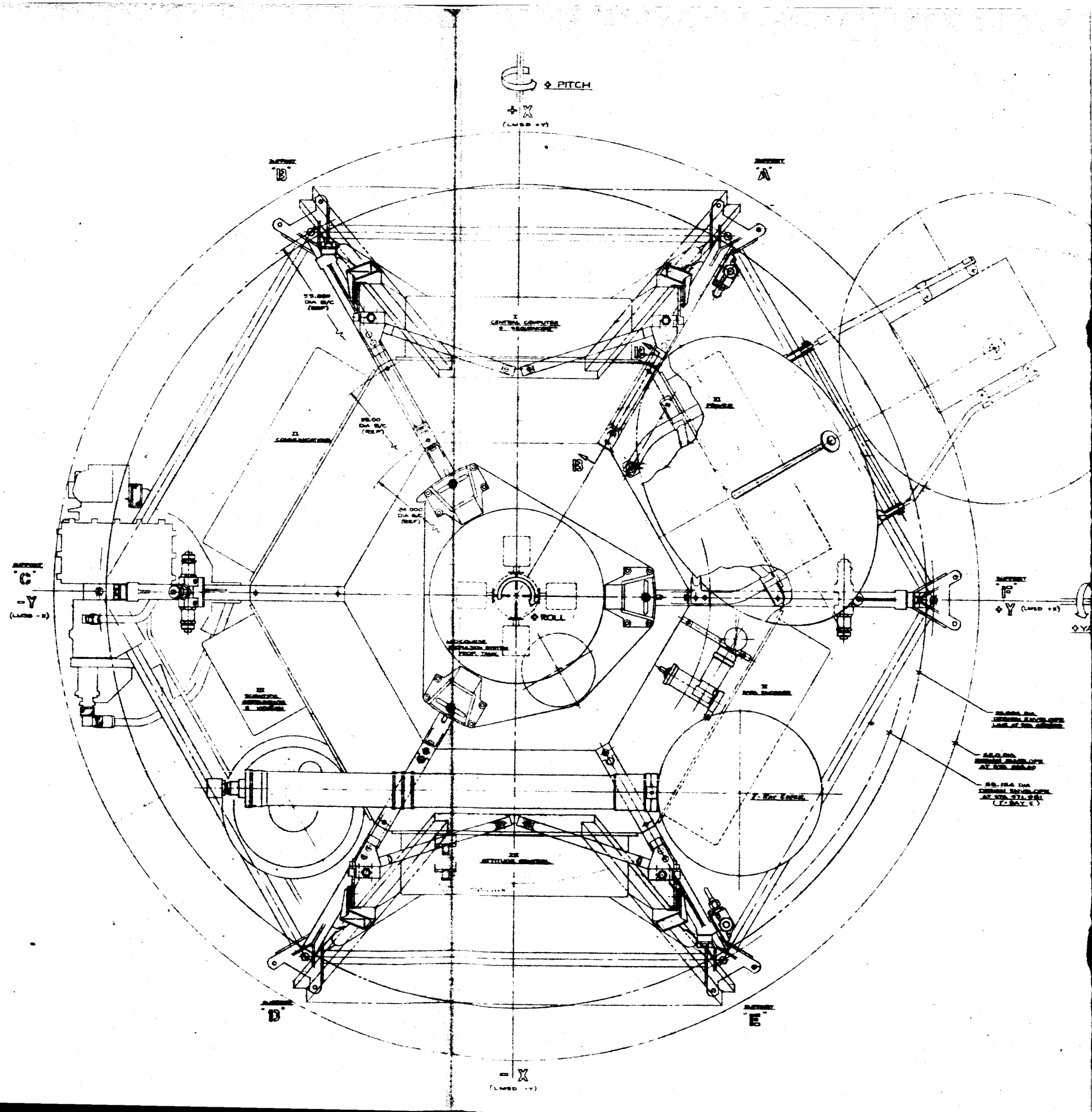

PITCH
+X
(LMSD +Y)
SUPPORT "B"
SUPPORT "A"
I CENTRAL COMPUTER & SEQUENCER
II COMMUNICATIONS
III PROPER
24.000 DIA B/C (REF)
SUPPORT "C"
-Y
(LMSD -X)
ROLL
SUPPORT "F"
+Y (LMSD +X)
III ATTITUDE CONTROL
SUPPORT "D"
SUPPORT "E"
-X
(LMSD -Y)

(Insert in Spacecraft Design Specification Book)

APPROVED:

M. R. Maynard

JET PROPULSION LABORATORY

Spec. No. RA345-APPENDIX III
30 January 1961

FUNCTIONAL SPECIFICATION

PACKAGING OF ELECTRONIC EQUIPMENT

1.0 SCOPE

The attached specification (No. 30220, January 1961) is fully applicable to RANGER 3, 4, and 5 Spacecraft insofar as the packaging design of electronic components, including packaging criteria, and applicable design constraints is concerned.

2.0 APPLICABLE DOCUMENTS

Applicable documents are listed in the attached specification.

3.0 DESIGN REQUIREMENTS

The packaging design shall be such that the electronic equipment is capable of meeting the requirements of the applicable general specification No. 30220, without exception.

JPL Spec. No. 30220 Change ___

Date: 11 January 1961

Engineer: G. F. Ervin
G. F. Ervin

Release: T. Stewart
T. Stewart

GENERAL SPECIFICATION

RANGER A-3, 4, 5, FLIGHT EQUIPMENT

ELECTRONIC PACKAGING OF COMPONENTS AND EQUIPMENT

JET PROPULSION LABORATORY
California Institute of Technology
4800 Oak Grove Drive
Pasadena 3, California

1. SCOPE

1.1 This specification covers the packaging requirements for electronic equipment contained in the hexagonal-shaped compartment of Ranger A-3, 4, 5 spacecraft. It also serves as a general guide for packaging scientific instruments and other electronic equipment which are located outside the hexagonal-shaped compartment.

2. APPLICABLE DOCUMENTS

2.1 The following documents, of the issue in effect form a part of this specification:

SPECIFICATIONS

Federal

QQ-M-56	Magnesium Alloy, Sand Castings
QQ-S-571C	Solder: Lead Alloy, Tin Lead Alloy, and Tin Alloy; Flux Cored Ribbon and Wire, Solid Form

Military

MIL-T-713	Twine and Tape, Lacing and Tying (For Use in Electrical and Electronic Equipment)
MIL-W-3861	Wire Electrical (Bare Copper)
MIL-W-16878	Wire, Electrical Insulated, High Temperature
MIL-P-18177	Plastic Sheet, Laminated, Thermosetting, Glass Cloth, Epoxy-Resin
MIL-P-21466	Plastic Sheet, Laminated, Copper-Clad, Glass-Base Epoxy

Jet Propulsion Laboratory

20014	Process Specification, Soldering Process
20054	Process Specification, Installation of Keensert Inserts

STANDARDS

Military

MS 15795	Washers, Flat, Metal, Round, General Purpose
MS 35233	Screw, Machine, Pan Head, Slotted Corrosion Resisting Steel, Passivated, NC-2A and UNC-2A
MS 35249	Screw, Machine, Flat Countersunk Head, Slotted, Corrosion Resisting, Steel, Passivated, NC-2A and UNC-2A
MS 35338	Washer, Lock, Split, Helical, Medium Series
MS 35461	Screw, Cap, Socket Head, Hexagon, Steel, Corrosion-Resisting Passivated, NC-3A and UNC-3A
MS 35649	Nut, Plain, Hexagon, Machine Screw, NC-2B
MS 35690	Nut, Plain, Hexagon, UNC-2B and UNF-2B

DRAWINGS

Jet Propulsion Laboratory

C-90088	Connector, Manufacturer - Bendix Pygmy
A-90091	Adhesive, Electronic Component
B-90092	Terminal Installation

A-90125	Coating, Electrical
B-90153	Splice, Wire
C-90190	Cup, Potting, D, Subminiature Connector
C-90245	Connector Installation, DEM-9 Through DDM-50
B-90251	Terminal Installation, Printed Circuit
J-3158542	Chassis, Basic
A-3910380	Subchassis, Outline

3. DESIGN REQUIREMENTS

3.1 General. - The Ranger A-3, 4, 5 packaging design considerations shall include, but not be restricted to the requirements specified herein. The packaging design shall be such that the electronic equipment is capable of meeting the requirements of the applicable general and detail specifications.

3.2 Geometry. - The standard assembly chassis shall conform to JPL Drawing J-3158542. The standard subassembly chassis shall conform to JPL Drawing A-3910380. A representation of a typical spacecraft assembly, including subassemblies is given in figure 1.

3.3 Structural. -

3.3.1 The assembly chassis shall serve as a stiffener and static load carrying member for the spacecraft structure.

3.3.2 Subassemblies shall serve as stiffeners for the assembly chassis such that minimum structural amplification of vibration occurs in frequencies below 500 cycles per second.

3.3.3 Terminal boards, where used, shall be bonded to the subchassis to provide structural stiffening and result in the highest possible natural frequency of vibration.

3.3.4 Heavy equipment shall be designed or located so as to minimize amplification of vibration and if possible to provide added rigidity to the assembly.

3.4 Thermal environment. -

3.4.1 Packaging design shall be such that all equipment shall operate within its most desirable temperature limits and be adaptable to passive temperature control procedures.

3.4.2 Equipment dissipating large amounts of heat shall be distributed among the assembly chassis to provide heat sources in as many of the assemblies as possible.

3.5 Center of gravity. - Equipment shall be distributed among the assembly chassis in such a manner to maintain the center of gravity of the spacecraft at the required location.

3.6 Simplicity of cabling. - Equipment locations shall provide maximum simplicity in electrical cable routing, harnessing, and clamping. Installed cabling shall be accessible for inspection and test and shall be suitable for prefabrication prior to installation in the equipment.

3.7 Functional integrity of assemblies. - Consistent with other restraints, each subsystem shall be fully contained within a single assembly chassis.

3.8 Weight and volume. - Electronic equipment within the hexagonal compartment shall be of a minimum weight and volume consistent with rigidity, reliability, and fabrication requirements.

3.9 Sterilization. - Materials used shall be compatible with Ethelyne Oxide sterilization procedures and shall not suffer any degradation from heat soaking (125°C for 24 hours) sterilization procedures.

4. STANDARD HARDWARE

4.1 All hardware used shall be corrosion resistant and non-magnetic.

4.2 Electrical connectors. -

4.2.1 Assembly connectors. -

a. The standard electrical connectors for connection of assembly cables to cables external to the assemblies shall be the Pygmy (PT series) connector available from Scintilla Division of Bendix Aviation Corporation.

b. The shell style shall be selected from the following:

Type 07 Jam Nut Receptacle

Type 06 Straight Plug

Type 00 Wall Mount Receptacle

c. The service class shall be Type P. for nylon potting boot.

d. The standard connectors within the series are as follows:

Shell Size and Arrangement	Number and Size of Contracts	Orientations
22-55	55#20	Normal W, X
22-21	21#16	Normal
20-41	41#20	Normal X
20-39	2#16, 37#20	Normal W
20-16	16#16	Normal
18-32	32#20	Normal X
16-26	26#20	Normal W

Shell Size and Arrangement	Number and Size of Contacts	Orientations
16-8	8#16	Normal
14-19	19#20	Normal W
12-10	10#20	Normal W, X
10-6	6#20	Normal W
8-4	4#20	Normal W

e. Typical Connector Designation:

PT - 07 P 22-55 S X

- X — X Orientation
- S — Socket Contacts
- 22-55 — Shell Size and Arrangement
- P — Service Class
- 07 — Shell Style
- PT — Series

f. The potting boots for the Bendix Pygmy PT connector are the T-PB Series potting cups available from Pli-O-Seal Co., in shell sizes 8, 10, 12, 14, 16, 18, 20, 22.

g. Assembly connector installation shall be in accordance with JPL Drawing C-90088.

4.2.2 Subassembly connectors. -

a. The standard electrical connector for subassembly usage is the subminiature "Golden D" Series available from Cannon Electric Co. or Cinch Mfg. Co.

b. Five sizes are available as follows:

DAM - 15 Contacts
DBM - 25 Contacts
DCM - 37 Contacts
DDM - 50 Contacts
DEM - 9 Contacts

c. Non-magnetic shells, attachment and locking hardware shall be specified.

d. Typical connector designation (Cannon).

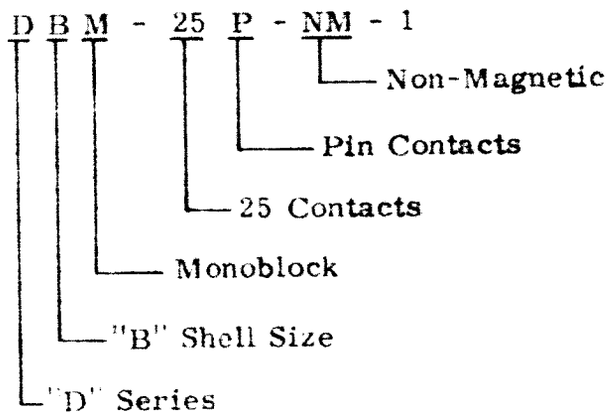

e. Potting cups shall be in accordance with JPL Drawing C-90190.

f. Connector installation shall be in accordance with JPL Drawing C-90245.

g. Non-magnetic attachment hardware shall be used and is typified as follows:

Item	Part Number
Male lock (stud attachment)	20418-11
Female lock (clip for all but 50-pin connector)	20419-11
Female lock (clip for 50-pin connector)	20420-10

4.3 Mechanical fasteners. -

4.3.1 All screw fasteners shall provide a locking feature to resist vibration.

4.3.2 Locking features shall be as follows, in order of preference:

a. For application of a screw in a blind hole:

1. Use the thread insert specified in 4.3.4 (h) below.

2. Use a resilient insert in the screw body (Long-Lok Corp.).

3. Use a helical split ring lock washer in conjunction with a plain washer (with the lock washer adjacent to the screw-head) specified in 4.3.4 (d) and (e) below.

b. For application of a screw in a through (clearance) hole:

1. Use the self-locking nut specified in 4.3.4 (f) below.

2. Use a helical split ring lock washer with a plain washer (with the lockwasher next to the nut) specified in 4.3.4 (d) and (e) below.

4.3.3 Preferred fasteners sizes and thread types are:

2-56 NC
4-40 NC
6-32 NC
8-32 NC
10-24 NC
1/4-20 UNC

4.3.4 The following fastening devices are standard:

a. Socket Head Cap Screw (MS-35461). -

Available in sizes 8, 10, and 1/4". For sizes 2, 4, 6 use commercial part.

b. Slotted Pan Head Screw (MS-35233). -

Available in sizes 2, 4, 6, 8, 10, 1/4", 5/16, and 3/8".

c. Slotted Flat Countersunk Head - 82° Screw (MS-35249). -

Available in sizes 1 through 3/4".

d. Lock Washers - Helical Split Ring (MS-35338). -

Available in sizes 2 through 1-1/2".

e. Washers - Plain Flat (MS-15795). -

Available in sizes from 0 through 3.

f. Nuts, Self Locking Hexagon, with Integral Washer. -

Use nuts of HW42 Series for numbers 2, 4, 5, 8, and HW42 (except NC thread series) for sizes 10 and 1/4" - manufactured by the Kaynar Mfg. Co.

g. Nuts, Plain, Hexagon (MS-35650). -

Available in sizes 2, 4, 6, 10.

For 1/4" and larger sizes use MS-35690.

h. Thread Inserts. - (JPL Specification 20054)

Use "Keenserts" Inserts, KNHL Series - with solid film lubrication - manufactured by the Newton Insert Co.

i. Nylon Nuts and Screws (for electrical use). -

For electrically insulated screws and nuts, where electrically insulated fasteners are required, use nylon nuts and screws of Type 101 nylon as supplied by Nylogrip Products.

4.4 Electrical wiring standards. -

4.4.1 Wire, hook-up for:

a. Assembly and inter-assembly cable harness usage:

Use Raythene "N" hook-up wire manufactured by Raytherm Corp.

b. For general hook-up usage within subassemblies and up to the subassembly connectors:

Use wire conforming to MIL-W-16878B, Type E (Teflon insulation).

4.4.2 Wire, Bus:

Use wire conforming to MIL-W-3861, Type S, soft or drawn and annealed, coated.

4.4.3 Sleeving. -

a. For connector pins, component part terminals, etc:

Use "Thermofit", black, manufactured by Raycelad Tube Inc.

b. For bus wire and component part lead insulation:

Use white teflon tubing, commercial.

4.4.4 Lacing tape. - (For wiring harness)

Use tape conforming to MIL-T-713A, Type P, Waxed, Class 2, White.

4.4.5 Solder. -

Use solder conforming to Federal Specification QQ-S-571C SN-60.

4.4.6 Solder Process. -

Use soldering processes in accordance with JPL Specification 20014.

4.4.7 Terminals and terminal installation. - Terminals and terminal installation shall be in accordance with JPL Drawing B-90092 and B-90251.

4.4.8 Wire splice, in-line. - Wire splice, in-line shall be in accordance with JPL Drawing B-90153.

4.4.9 Terminal installation, printed circuit. - Terminal installation, printed circuit shall be in accordance with JPL Drawing B-90251.

5. MATERIALS

5.1 Structural metals. -

a. For general casting usage, magnesium alloy AZ63 or AZ91 conforming to Federal Specification QQ-M-56, condition T5 shall be used.

b. For general wrought material, magnesium tooling plate (commercial) shall be used. Corrosion protection of magnesium shall be as specified in 5.6.

5.2 Terminal boards. -

a. Etched circuit terminal boards shall be of 0.031 inch thick epoxy-glass laminate conforming to MIL-P-21466.

b. Terminal boards shall be 0.031 inch thick epoxy-glass laminate conforming to MIL-P-18177, Type GEE.

c. Insulation boards (used between terminal boards and subchassis) shall be of 0.008 inch thick epoxy-glass laminate type EG-752 available from Mica Corp.

5.3 Adhesive. - For general purpose bonding, including bonding of insulation board to terminal board and circuit board assembly to subchassis, the adhesive conforming to JPL Drawing A-90091 shall be used.

5.4 Conformal coating for circuit boards. - The coating of electrical components and circuit boards shall conform to JPL Drawing A-90125.

5.5 Encapsulation material. - The encapsulation material for general application shall be Stycast 1095 manufactured by Emerson & Cumming Inc.

5.6 Surface protection. - Magnesium parts shall be treated as specified on the detail drawing of the part; in general this treatment shall be in accordance with MIL-M-3171, Type I or Type III.

6. NOTES

6.1 Suggested procurement. - The following listed manufacturers have been found satisfactory and are recommended:

Cannon Electric Company, 3208 Humbolt St., Los Angeles, California

Cinch Mfg. Company, 1709 West 8th St., Los Angeles, California

Emerson & Cumming Inc., 869 Washington St., Canton, Massachusetts

Kaynar Mfg. Company, Inc- Kaylock Division, Box 2001 Terminal Annex, Los Angeles, California

Long-Lok Corp., 2601 Colorado, Santa Monica, California

Mica Corp., 4031 Eienda St., Culver City, California

Newton Company, Missile Ground Support and Guidance Equipment, 55 Elm St., Manchester, Connecticut

Nylogrip Products, 447 Watertown St., Newton, Massachusetts

Pli-O-Seal Company, 1010 Chesnut St., Burbank, California

Rayclad Tubes Inc., 11313 West Washington Blvd., Los Angeles, California

Raytherm Company, 2511 West 7th St., Los Angeles, California

Scintilla Division, Bendix Aviation Corp., 117 East Providencia, Burbank, California

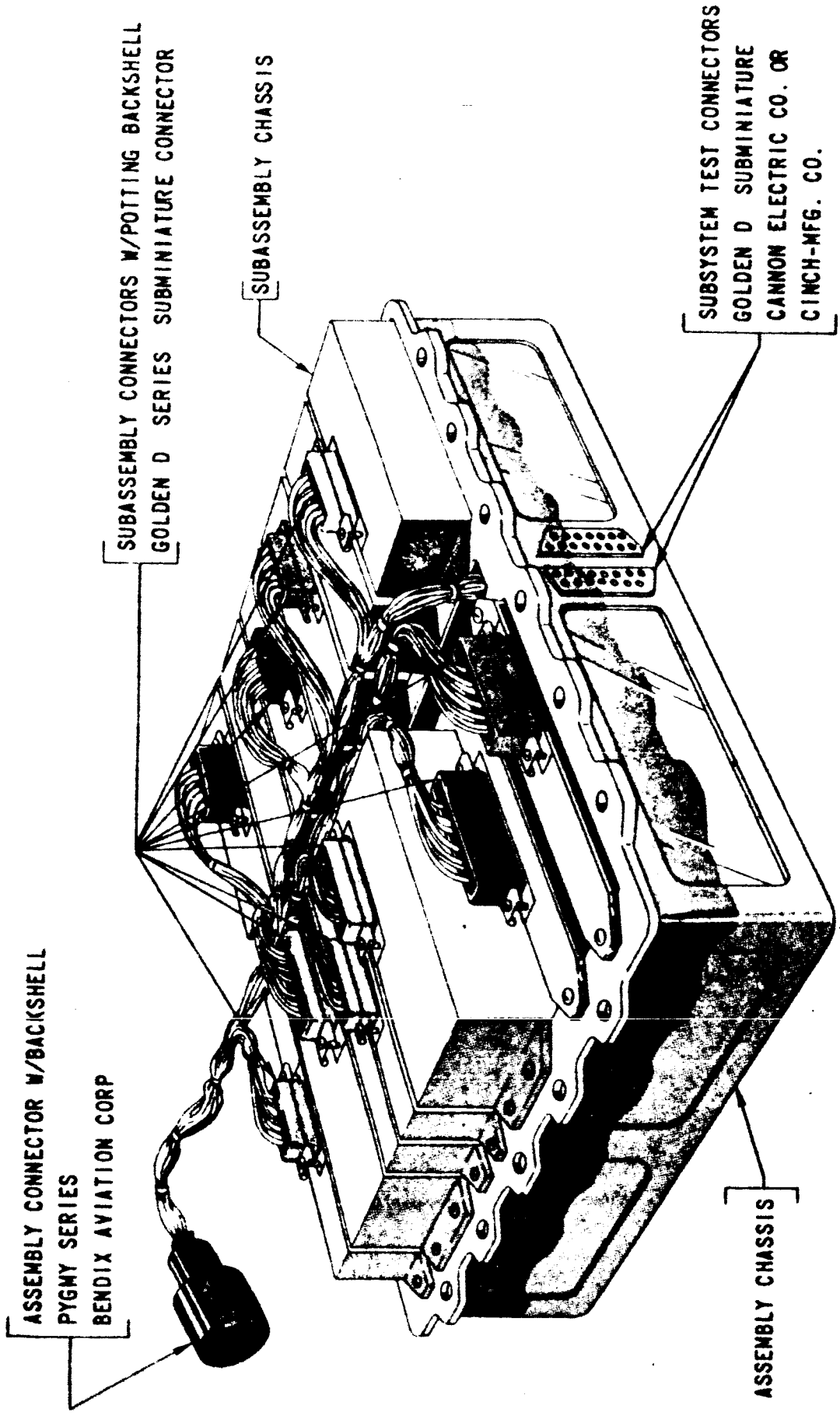

TYPICAL SPACECRAFT ASSEMBLY

FIGURE 1

(Insert in Spacecraft Design Specification Book)

APPROVED:

System: M. R. Mesnard

Subsystem: W G Leilang

Subsystem: J Koukal

JET PROPULSION LABORATORY

Spec. No. RA 345 Appendix IV
Revision A
5 March 1962

SUPERSEDES:
RA 345 Appendix IV
1 September 1961

RA-3, RA-4, AND RA-5 SPACECRAFT TELEMETERING CHANNEL ASSIGNMENTS

REVISED & REWRITTEN

1.0 SCOPE

This appendix contains the JPL Telemetering Channel Assignments for the Ranger 3, 4, and 5 Spacecraft.

1.1 CHANGES FROM LAST ISSUE

The major changes from the previous issue of this specification are listed below. In addition to this list, numerous revisions to the cognizant engineer list have been made.

TITLE CHANGES

Channel	From	To	Reference
2-D-1	+Y Yaw Jet Vane Actuator Temp.	-Y Yaw Jet Vane Actuator Temp.	ECO 2112
4-H-2	-Y Yaw Jet Vane Actuator Temp.	+Y Yaw Jet Vane Actuator Temp.	ECO 2112
3-F-8	Nitrogen Tank Pressure	A/C Nitrogen Tank Pressure	ECO 3106
5-A-0	Helium Tank Pressure	M/C Nitrogen Tank Pressure	ECO 3106

Channel	From	To	Reference
2-G-5	Nitrogen Tank Temperature	A/C Nitrogen Tank Temp.	ECO 3106
4-J-5	Helium Tank Temperature	M/C Nitrogen Tank Temp.	ECO 3106
4-H-8	Helium Tank Pressure	M/C Nitrogen Tank Pressure	ECO 3106
2-G-7	Calibration - Mid	Calibration - Mid, Temp. Br.	*
4-J-8	Calibration - High	Calibration - High, Temp. Br.	*

MEASUREMENT RANGE CHANGES

Channel	Title	From	To	Reference
V	Altimeter Echo Strength	±2.5 V	-60 to -100 dbm	ECO 2050
3-F-6	Tele Mode Indication	Modes I-IV	Modes I-III	*

* Change made for technical clarity only.

JPL TELEMETERING CHANNEL ASSIGNMENT

PROJECT RANGER 3, 4, & 5 RA 345 Appendix IV Rev. A

SYSTEM ATTITUDE CONTROL

CHANNEL	MEASUREMENTS	MEASUREMENT RANGE	DATA ENCODER INPUT RANGE	COMBINED ACCURACY OF DATA ENCODER & DATA REDUCTION	SAMPLE RATE Sec/Sample
5-A-2	Yaw Gyro Torque	±0.4°/sec	±5.8 vdc	15%*	0.2
5-A-3	Roll Gyro Torque	±0.4°/sec	±5.8 vdc	15%*	0.2
5-A-4	Pitch Gyro Torque	±0.4°/sec	±5.8 vdc	15%*	0.2
2-C-0	Roll Position (Earth Sensor)	±2.5°	±20 vdc	5%	10
2-C-1	Hinge Earth Sensor Out	±2.5°	±20 vdc	5%	10
2-C-2	Pitch Switching Amplifier Output	POLARITY	0 vdc +12.5 vdc -12.5 vdc	5%	10
2-C-3	Yaw Switching Amplifier Output	POLARITY	0 vdc +12.5 vdc -12.5 vdc	5%	10
2-C-4	Yaw Rate Gyro (Coarse)	±1500°/hr	±20 vdc	5%	10
2-C-5	Pitch Rate Gyro (Fine)	±62°/hr	±0.83 vdc	5%	10
2-C-6	Yaw Rate Gyro (Fine)	±62°/hr	±0.83 vdc	5%	10
2-C-7	Roll Rate Gyro (Fine)	±62°/hr	±0.83 vdc	5%	10
2-C-8	Earth Sensor Light Intensity	0.01 to 17 ft-candles	0 to -0.5 vdc	5%	10
2-D-1	-Y Yaw Jet Vane Actuator Temp.	0 to +500°F	±0.25 vdc	5%	10
6-B-0	+Y Yaw Jet Vane Angle	±25°	±13.3 vdc	15%*	0.2
6-B-1	-Y Yaw Jet Vane Angle	±25°	±13.3 vdc	15%*	0.2

* Due to noise error at threshold

CHANNEL	MODE 1		MODE 2		MODE 3		MODE 4		MODE 5		COGNIZANT ENGINEER
		Transponder		Transponder		Transponder		Transponder		Transponder	
5-A-2		x		x		x		-			Hill
5-A-3		x		x		x		-			Hill
5-A-4		x		x		x		-			Hill
2-C-0		x		-		x		-			Hill
2-C-1		x		-		x		-			Hill
2-C-2		x		-		x		-			Hill
2-C-3		x		-		x		-			Hill
2-C-4		x		-		x		-			Hill
2-C-5		x		-		x		-			Hill
2-C-6		x		-		x		-			Hill
2-C-7		x		-		x		-			Hill
2-C-8		x		-		x		-			Hill
2-D-1		-		x		-		-			Hill
6-B-0		x		x		x		-			Hill
6-B-1		x		x		x		-			Hill

NOTE: An X indicates the measurement is being made.

JPL TELEMETERING CHANNEL ASSIGNMENT

PROJECT RANGER 3, 4, & 5 RA 345 Appendix IV Rev. A

SYSTEM ATTITUDE CONTROL

CHANNEL	MEASUREMENTS	MEASUREMENT RANGE	DATA ENCODER INPUT RANGE	COMBINED ACCURACY OF DATA ENCODER & DATA REDUCTION	SAMPLE RATE Sec/Sample
6-B-2	+X Pitch Jet Vane Angle	±25°	±13.3 vdc	15%*	0.2
6-B-3	-X Pitch Jet Vane Angle	±25°	±13.3 vdc	15%*	0.2
3-D-1	Pitch Rate Gyro (Coarse)	±1500°/hr	±20 vdc	5%	10
3-D-3	Pitch Sun Sensor Out	±0.9°	±18 vdc	5%	10
3-D-4	Yaw Sun Sensor Out	±0.9°	±18 vdc	5%	10
3-D-6	Antenna Hinge Angle	0 to 180°	+0.33 to +5.33 vdc	5%	10
3-D-7	Roll Rate Gyro (Coarse)	±1500°/hr	±20 vdc	5%	10
3-F-8	A/C Nitrogen Tank Pressure	0 to 3500 psia	±6 vdc	5%	100
2-G-5	A/C Nitrogen Tank Temp.	-25°F to +165°F	±0.125 vdc	5%	100
4-H-2	+Y Yaw Jet Vane Actuator Temp.	0°F to +500°F	0 to +0.5 vdc	5%	1000
4-J-0	Earth Sensor Temperature	±100°F	0 to -0.2 vdc	5%	1000
4-J-1	+Y Pitch (7A13) Sun Sensor Temp.	+14 to +140°F	0 to -0.2 vdc	5%	1000
4-J-2	-Y Pitch (7A11) Sun Sensor Temp.	+14 to +140°F	0 to -0.2 vdc	5%	1000
4-J-9	Differential (7A10 minus 7A12) Sun Sensor Temp.	±36°F in -31 to +95°F	0 to -0.2 vdc	5%	1000

* Due to noise error at threshold

CHANNEL	MODE 1		MODE 2		MODE 3		MODE 4		MODE 5		COGNIZANT ENGINEER
		Transponder		Transponder		Transponder		Transponder		Transponder	
6-B-2		x		x		x		-			Hill
6-B-3		x		x		x		-			Hill
3-D-1		x		x		x		-			Hill
3-D-3		x		x		x		-			Hill
3-D-4		x		x		x		-			Hill
3-D-6		x		x		x		-			Hill
3-D-7		x		x		x		-			Hill
3-F-8		x		x		x		-			Dahlgren
2-G-5		x		-		x		-			Dahlgren
4-H-2		x		x		x		-			Hill
4-J-0		x		x		x		-			Hill
4-J-1		x		x		x		-			Hill
4-J-2		x		x		x		-			Hill
4-J-9		x		x		x		-			Hill

NOTE: An x indicates the measurement is being made

JPL TELEMETERING CHANNEL ASSIGNMENT

PROJECT RANGER 3, 4, & 5 RA 345 Appendix IV Rev. A

SYSTEM CC&S

CHANNEL	MEASUREMENTS	MEASUREMENT RANGE	DATA ENCODER INPUT RANGE	COMBINED ACCURACY OF DATA ENCODER & DATA REDUCTION	SAMPLE RATE Sec/Sample
1	400 C.P.S.	400 ±1 CPS	6 V Pulses 400 ±1 PPS		Cont.
B-2-1	CC&S Program	Event	+6 V Pulse	3 sec.	Cont.
B-20	Mid-course Velocity Increment	0 to 204.7 ft/sec 12 bits	-6 V Pulse		1 word Every 8 sec
8	Mid-course Acceleration	0 to 2.4 ft/sec^2	0 to 25 PPS 5 V Pulse		Cont.

CHANNEL	MODE 1		MODE 2		MODE 3		MODE 4		MODE 5		COGNIZANT ENGINEER
		Transponder		Transponder		Transponder		Transponder		Transponder	
1		x		x		x		x			Nichols
B-2-1		x		x		x		x			Nichols
B-20		-		x		-		-			Nichols
8		-		x		-		-			Hand

NOTE: An x indicates the measurement is being made

JPL TELEMETERING CHANNEL ASSIGNMENT

PROJECT RANGER 3, 4, & 5 RA 345 Appendix IV Rev. A
SYSTEM CENTRAL POWER

CHANNEL	MEASUREMENTS	MEASUREMENT RANGE	DATA ENCODER INPUT RANGE	COMBINED ACCURACY OF DATA ENCODER & DATA REDUCTION	SAMPLE RATE Sec/Sample
3-D-8	Power System Voltage	+18 to +31 vdc	0 to 5 vdc	5%	10
4-E-6	+X Panel (4A9) Amperes	0 to 5 amps	0 to 5 vdc	5%	100
4-E-7	-X Panel (4A10) Amperes	0 to 5 amps	0 to 5 vdc	5%	100
3-F-0	-X Panel (4A10) Volts	20 to 35 vdc	20 to 35 vdc	5%	100
3-F-1	+X Panel (4A9) Volts	20 to 35 vdc	20 to 35 vdc	5%	100
3-F-2	Power Converter A/C (4A3) Volts	0 to 4.5 vdc	0 to 5 vdc	5%	100
3-F-3	Power Inverter Data Encoder (4A7) Volts	0 to 4.5 vdc	0 to 5 vdc	5%	100
3-F-4	Power Converter Command (4A5) Volts	0 to 4.5 vdc	0 to 5 vdc	5%	100
3-F-5	Power Inverter Scientific (4A8) Volts	0 to 4.5 vdc	0 to 5 vdc	5%	100
3-F-7	Power System Current	0 to 10 amps	0 to 5 vdc	5%	100
2-G-0	+X Panel (4A9) Front Temp.	+45°F to +145°F	±0.125 vdc	5%	100
2-G-1	+X Panel (4A9) Back Temp.	+45°F to +145°F	±0.125 vdc	5%	100
2-G-2	-X Panel (4A10) Front Temp.	+45°F to +145°F	±0.125 vdc	5%	100
2-G-3	-X Panel (4A10) Back Temp.	+45°F to +145°F	±0.125 vdc	5%	100
2-G-8	Solar Panel Extension	Event	6 V Step	5%	100
4-H-0	Power Boost Reg. (4A2) Temp.	0 to 200°F	0 to +0.5 vdc	5%	1000
4-H-1	Power Converter A/C (4A3) Temp.	0 to 200°F	0 to +0.5 vdc	5%	1000
4-H-4	Power 400 CPS 1 Phase Inverter (4A13) Volts	0 to 4.5 vdc	0 to +5 vdc	5%	1000

CHANNEL	MODE 1		MODE 2		MODE 3		MODE 4		MODE 5		COGNIZANT ENGINEER
		Transponder		Transponder		Transponder		Transponder		Transponder	
3-D-8		x		x		x		-			Almaguer
4-E-6		x		x		x		-			Ritchie
4-E-7		x		x		x		-			Ritchie
3-F-0		x		x		x		-			Ritchie
3-F-1		x		x		x		-			Ritchie
3-F-2		x		x		x		-			Almaguer
3-F-3		x		x		x		-			Almaguer
3-F-4		x		x		x		-			Almaguer
3-F-5		x		x		x		-			Almaguer
3-F-7		x		x		x		-			Almaguer
2-G-0		x		-		x		-			Ritchie
2-G-1		x		-		x		-			Ritchie
2-G-2		x		-		x		-			Ritchie
2-G-3		x		-		x		-			Ritchie
2-G-8		x		-		x		-			McPherson
4-H-0		x		x		x		-			Almaguer
4-H-1		x		x		x		-			Almaguer
4-H-4		x		x		x		-			Almaguer

NOTE: An x indicates the measurement is being made

JPL TELEMETERING CHANNEL ASSIGNMENT

PROJECT RANGER 3, 4, & 5 RA 345 Appendix IV Rev. A
SYSTEM CENTRAL POWER

CHANNEL	MEASUREMENTS	MEASUREMENT RANGE	DATA ENCODER INPUT RANGE	COMBINED ACCURACY OF DATA ENCODER & DATA REDUCTION	SAMPLE RATE Sec/Sample
4-H-5	Power 400 CPS 3 Phase Inverter (4A14) Volts	0 to 4.5 vdc	0 to 5 vdc	5%	1000
4-H-6	Solar Cell Short Circuit Amperes	0 to 0.2 amps	0 to +0.5 vdc	5%	1000
4-H-7	Solar Cell Open Circuit Voltage	0 to 0.25 vdc	0 to +0.5 vdc	5%	1000
4-J-4	Battery Temperature	+32 to +158°F	0 to -0.2 vdc	5%	1000
4-J-6	Power Switching & Logic Temp.	0 to 200°F	0 to -0.2 vdc	5%	1000

CHANNEL	MODE 1		MODE 2		MODE 3		MODE 4		MODE 5		COGNIZANT ENGINEER
		Transponder		Transponder		Transponder		Transponder		Transponder	
4-H-5		x		x		x		-			Almaguer
4-H-6		x		x		x		-			Ritchie
4-H-7		x		x		x		-			Ritchie
4-J-4		x		x		x		-			Banes
4-J-6		x		x		x		-			Almaguer

NOTE: An x indicates the measurement is being made

JPL TELEMETERING CHANNEL ASSIGNMENT

PROJECT RANGER 3, 4, & 5 RA 345 Appendix IV Rev. A
SYSTEM COMMUNICATIONS

CHANNEL	MEASUREMENTS	MEASUREMENT RANGE	DATA ENCODER INPUT RANGE	COMBINED ACCURACY OF DATA ENCODER & DATA REDUCTION	SAMPLE RATE Sec/Sample
3-D-0	Receiver AGC (Coarse)	-50 to -140 dbm	-2 to +5.5 vdc	5%	10
3-D-5	Receiver AGC (Coarse)	-50 to -140 dbm	-2 to +5.5 vdc	5%	10
3-D-2	Receiver Phase Error (Coarse)	±3.75 vdc	±1.5 vdc	5%	10
4-E-0	Lo Gain Antenna Drive	+10 to +35 dbm	0 to +0.5 vdc	5%	100
4-E-1	High Gain Antenna Drive	+10 to +35 dbm	0 to +0.5 vdc	5%	100
4-E-2	Transponder R.F. Drive Level	0 to +10 dbm	0 to +0.5 vdc	5%	100
4-E-3	Receiver AGC (Fine)	-100 to -140 dbm	+2 to +4.5 vdc	5%	100
4-E-4	Transponder High Voltage Supply	0 to +250 vdc	0 to +0.5 vdc	5%	100
4-E-5	Receiver Phase Error (Fine)	0 to -2 vdc	0 to -0.5 vdc	5%	100
4-H-3	Receiver Mixer Current	-3 to +3 dbm	0 to -0.1 vdc	5%	1000
4-J-3	Transponder Temperature	+14 to +158°F	0 to -0.2 vdc	5%	1000
B-20	Command System Output	17 Bits	0 or -6 vdc		Cont.
B-19	Commutator Sync.	- - -	- - -		Cont.

CHANNEL	MODE 1		MODE 2		MODE 3		MODE 4		MODE 5		COGNIZANT ENGINEER
		Transponder		Transponder		Transponder		Transponder		Transponder	
3-D-0		x		x		x		-			Mathison
3-D-5		x		x		x		-			Mathison
3-D-2		x		x		x		-			Mathison
4-E-0		x		x		x		-			Mathison
4-E-1		x		x		x		-			Mathison
4-E-2		x		x		x		-			Mathison
4-E-3		x		x		x		-			Mathison
4-E-4		x		x		x		-			Mathison
4-E-5		x		x		x		-			Mathison
4-H-3		x		x		x		-			Mathison
4-J-3		x		x		x		-			Mathison
B-20		x		-		x		-			Stolarik
B-19		x		x		x		-			Leflang

NOTE: An x indicates the measurement is being made

JPL TELEMETERING CHANNEL ASSIGNMENT

PROJECT RANGER 3, 4 & 5 RA 345 Appendix IV Rev. A
SYSTEM MIDCOURSE PROPULSION

CHANNEL	MEASUREMENTS	MEASUREMENT RANGE	DATA ENCODER INPUT RANGE	COMBINED ACCURACY OF DATA ENCODER & DATA REDUCTION	SAMPLE RATE Sec/Sample
2-D-5	Fuel Tank Temperature	-25° F to +165° F	±0.25 vdc	5%	10
5-A-0	M/C Nitrogen Tank Pressure	0 to 3,600 psia	±6 vdc	15%*	0.2
5-A-1	Fuel Tank Pressure	0 to 460 psia	±6 vdc	15%*	0.2
4-H-8	M/C Nitrogen Tank Press.	0 to 3,600 psia	±6 vdc	5%	1,000
4-H-9	Fuel Tank Pressure	0 to 460 psia	±6 vdc	5%	1,000
4-J-5	M/C Nitrogen Tank Temp.	-25° F to +165° F	0 to -0.2 vdc	5%	1,000
2-D-0	M/C Motor Chamber Temp.	0 to 2,000° F	±0.25 vdc	5%	10
2-D-2	M/C Motor Chamber Temp.	0 to 2,000° F	±0.25 vdc	5%	10
2-D-3	M/C Motor Chamber Temp.	0 to 2,000° F	±0.25 vdc	5%	10
2-D-4	M/C Motor Chamber Temp.	0 to 2,000° F	±0.25 vdc	5%	10
2-D-6	M/C Motor Chamber Temp.	0 to 2,000° F	±0.25 vdc	5%	10
2-D-7	M/C Motor Chamber Temp.	0 to 2,000° F	±0.25 vdc	5%	10
2-D-8	M/C Motor Chamber Temp.	0 to 2,000° F	±0.25 vdc	5%	10
2-D-9	M/C Motor Chamber Temp.	0 to 2,000° F	±0.25 vdc	5%	10

*Due to noise error at threshold.

CHANNEL	MODE 1		MODE 2		MODE 3		MODE 4		MODE 5		COGNIZANT ENGINEER
		Transponder		Transponder		Transponder		Transponder		Transponder	
2-D-5		-		x		-		-			Schmitz
5-A-0		x		x		x		-			Schmitz
5-A-1		x		x		x		-			Schmitz
4-H-8		x		x		x		-			Schmitz
4-H-9		x		x		x		-			Schmitz
4-J-5		x		x		x		-			Schmitz
2-D-0		-		x		-		-			Schmitz
2-D-2		-		x		-		-			Schmitz
2-D-3		-		x		-		-			Schmitz
2-D-4		-		x		-		-			Schmitz
2-D-6		-		x		-		-			Schmitz
2-D-7		-		x		-		-			Schmitz
2-D-8		-		x		-		-			Schmitz
2-D-9		-		x		-		-			Schmitz

NOTE: An x indicates the measurement is being made

JPL TELEMETERING CHANNEL ASSIGNMENT

PROJECT RANGER 3, 4, & 5 RA 345 Appendix IV Rev. A
SYSTEM SCIENTIFIC

CHANNEL	MEASUREMENTS	MEASUREMENT RANGE	DATA ENCODER INPUT RANGE	COMBINED ACCURACY OF DATA ENCODER & DATA REDUCTION	SAMPLE RATE Sec/Sample
2-G-9	Gamma Ray Boom Extension	Event	6V Step	5%	100
4-J-7	Gamma Ray Experiment Temperature	+32 to +104°F	0 to -0.2VDC	5%	1000
8	Gamma Ray Intensity	25 bits/sec 512 bits/word	±2.5 V		1 word every 8 min.
V	Gamma Ray Intensity	200 bits/sec 512 bits/word	±2.5 V		1 word every 52 sec.
V	Vidicon Output	0 to 2 kc	0 to -2 V		1 frame every 13 sec.
V	Altimeter Echo Strength	dbm -60 to -100	±2.5 V	10%	13 sec.

CHANNEL	MODE 1		MODE 2		MODE 3		MODE 4		MODE 5		COGNIZANT ENGINEER
		Transponder		Transponder		Transponder		Transponder		Transponder	
2-G-9		x		-		x		-			Forsythe
4-J-7		x		x		x		-			Metzger
8		x		-		x		-			Metzger
V		-		-		-		x			Metzger
V		-		-		-		x			Heyser
V		-		-		-		x			W. E. Brown Jr

NOTE: An x indicates the measurement is being made

JPL TELEMETERING CHANNEL ASSIGNMENT

PROJECT RANGER 3, 4, & 5 RA 345 Appendix IV Rev. A
SYSTEM MISCELLANEOUS

CHANNEL	MEASUREMENTS	MEASUREMENT RANGE	DATA ENCODER INPUT RANGE	COMBINED ACCURACY OF DATA ENCODER & DATA REDUCTION	SAMPLE RATE Sec/Sample
B-2-2	Squib Fire Tele.	Event	+6 V Pulse	3 sec	Cont.
B-2-3	Omni Antenna Extension	Event	+6 V Pulse	3 sec	Cont
B-2-4	Radio Altimeter Extension	Event	+4.5 V Pulse	3 sec	Cont.
B-2-4	Capsule Separation	Event	+4.5 V Pulse	3 sec	Cont.
3-F-6	Tele. Mode Indication	Modes I-III	±0.5 vdc	5%	100
2-G-4	Gyro Pkg. Temp.	0 to 70°C	±0.125 vdc	5%	100
2-G-6	Temp. Control Temp.	-25°F to +165°F	±0.125 vdc	5%	100
6-B-4	Calibration - High	-	+1.0 vdc	15%*	0.2
2-G-7	Calibration-mid, Temp. Br.	-	562 ohms	5%	100
3-F-9	Calibration-mid	-	0 vdc	5%	1000
4-J-8	Calibration-High, Temp. Br.	-	562 ohms	5%	1000

* Due to noise error at threshold

CHANNEL	MODE 1		MODE 2		MODE 3		MODE 4		MODE 5		COGNIZANT ENGINEER
		Transponder		Transponder		Transponder		Transponder		Transponder	
B-2-2		x		x		x		x			Quinn
B-2-3		x		x		x		x			McPherson
B-2-4		x		x		x		x			Cushing
B-2-4		x		x		x		x			Cushing
3-F-6		x		x		x		-			Leflang
2-G-4		x		-		x		-			Hill
2-G-6		x		-		x		-			Porter
6-B-4		x		x		x		-			Leflang
2-G-7		x		-		x		-			Leflang
3-F-9		x		x		x		-			Leflang
4-J-8		x		x		x		-			Leflang

NOTE: An x indicates the measurement is being made.

(Insert in Spacecraft Design Specification Book)

APPROVED:
System: M. A. Mesnard / SR
Subsystem: J. F. Kuckal
Subsystem: Fred E. Stolarik

JET PROPULSION LABORATORY

Spec. No. RA 345-4-322A
2 April 1962

SUPERSEDES:
RA 345-4-322
30 January 1962

FUNCTIONAL SPECIFICATION
RA-3, RA-4, AND RA-5 SPACECRAFT
SPACECRAFT COMMAND SUBSYSTEM

✻ DENOTES CHANGE

1.0 SCOPE

1.1 This specification covers the functional requirements for the Ranger RA-3, 4, and 5 Spacecraft Command Subsystem including the functions of detection and decoding required to determine the presence of commands at the output of the spacecraft radio receiver and route the commands to the appropriate spacecraft subsystems.

1.2 This specification does not include the associated ground encoding, radio transmission, and radio reception functions.

2.0 APPLICABLE DOCUMENTS

2.1 The following documents apply to this specification:

SPECIFICATIONS

Jet Propulsion Laboratory

30358	Design Specification, Digital Command Decoder Subsystem and Associated Checkout Instruments, Ranger Agena PTM-3

30359	Design Specification, Ranger/Agena PTM-3 Flight Equipment, Command Decoding System, Asynchronous Digital Command Detector Subsystem
RA 345-3-110	Design Characteristics
RA 345-3-120	Design Restraints

3.0 DESCRIPTION

3.1 General

The spacecraft command subsystem shall detect and decode ground commands in the form of binary frequency shift keying of an audio frequency subcarrier as shown in figure 3.1-1.

The subcarrier signal is recovered within the spacecraft transponder and is applied to the spacecraft command subsystem which shall be comprised of two elements, the command detector and the command decoder.

The command detector establishes bit sync and detects each digit of each command word. The binary digital output of the command detector is applied to the input of the command decoder. This element then decodes the command address, and proceeds to process the command in the appropriate manner. Stored commands are applied to the CC&S in serial binary form, and real-time commands are executed by momentarily actuating the designated relay within the command decoder.

3.1.1 Command Complement

The commands required for RA-3, RA-4, and RA-5 are listed in table I. The commands shall be divided into the following two categories:

a. Real-time commands

b. Stored commands

3.1.1.1 Real-time Commands

Real-time commands shall cause momentary actuation of the relay in the command decoder which is designated by the command address.

3.1.1.2 Stored Commands

Stored commands shall transfer both the address and data portion of the command word to the CC&S in serial binary form.

3.1.2 Word Format

A standard command word shall be comprised of 18 serial binary digits. The first digit, a binary one, acts as a framing bit. The next five digits are the command address block, and the final twelve digits, the data

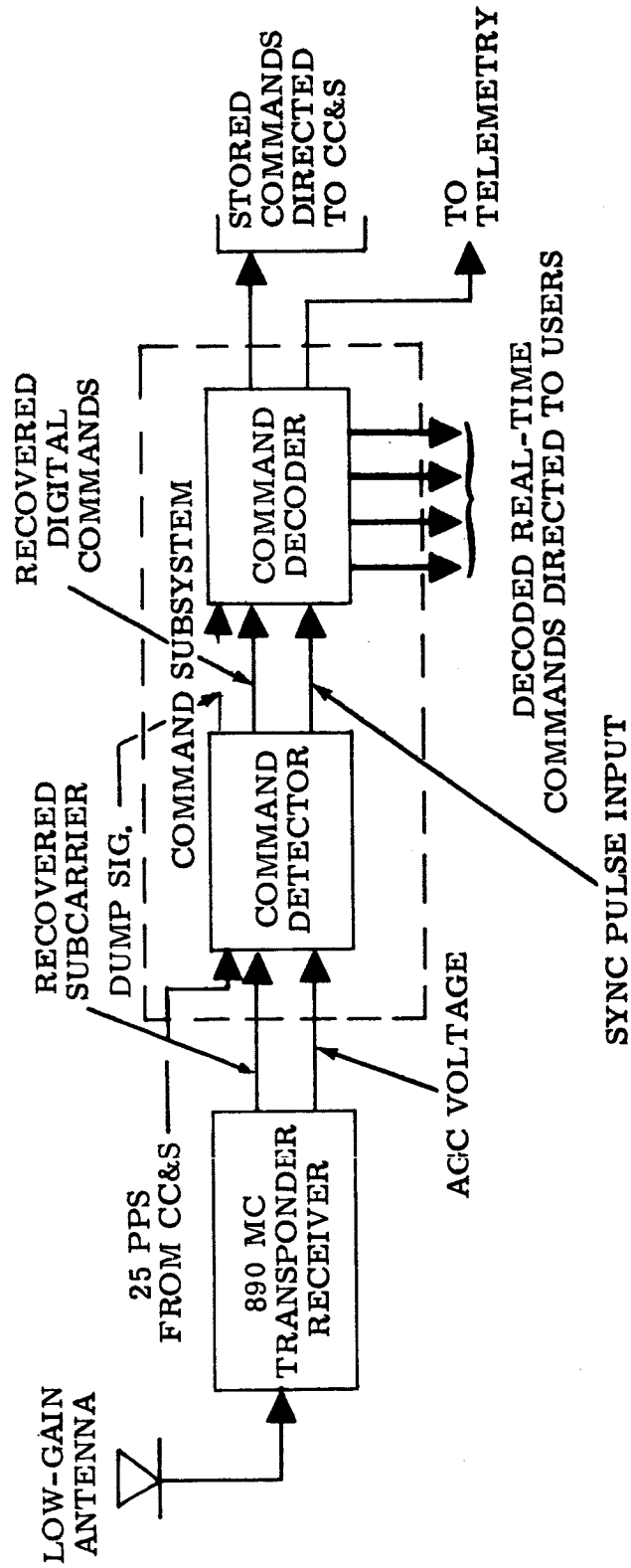

Figure 3.1-1 Spacecraft Command Subsystem

✱ Table I

LIST OF RA-3 COMMANDS		
Command Designation	Command Description	Resultant Action
RTC-1	Roll Override	150±50 ms relay closure
RTC-2	Antenna Hinge Angle Override	150±50 ms relay closure
RTC-3	Antenna Switchover	150±50 ms relay closure
RTC-4	Begin Midcourse Maneuver	150±50 ms relay closure
RTC-5	Telemetry Mode Change (Backup)	150±50 ms relay closure
RTC-6	Begin Terminal Maneuver & Turn on Vidicon Experiment	150±50 ms relay closure
RTC-7	Turn On Altimeter Power (Backup)	150±50 ms relay closure
(1) SC-1	Midcourse Roll Maneuver Duration	17 Digit word to CC&S
(1) SC-2	Midcourse Pitch Maneuver Duration	17 Digit word to CC&S
(2) SC-3	Midcourse Velocity Increment	17 Digit word to CC&S
(1) SC-4	Terminal First Pitch Maneuver Duration	17 Digit word to CC&S
(1) SC-5	Terminal Yaw Maneuver Duration	17 Digit word to CC&S
(1) SC-6	Terminal Second Pitch Maneuver Duration	17 Digit word to CC&S

Note: A 'clear' command, designated RTC-0, is used to clear the shift registers prior to issuing real-time or stored commands both during ground testing and in flight and has the format 1-00000-000000000000. The probability of successful clearing is greatly enhanced by transmitting two (2) consecutive clear commands at each occasion.

(1) For maneuver commands, the last bit transmitted (termed the 'polarity' bit) will have the convention of binary "1" for a positive turn and binary "0" for a negative turn.

(2) The midcourse motor can be prevented from igniting (in the event a velocity change is not required) by transmitting all binary "1's" for the magnitude. The motor will ignite but will not extinguish until the fuel is completely used by transmitting all binary "0's" for the magnitude.

block, represents the magnitude and polarity of the stored commands. The command address completely identifies which command has been sent. Although the data block contains no information in the case of real-time commands, those digits shall be transmitted as binary zeros to maintain the standard command word format.

3.1.3 Modulation Type

The command system shall employ a subcarrier which in frequency-shift-key (FSK) modulated by the command word. Each command word shall be expressed in non-return-to-zero serial binary form, and received at a one bit-per-second rate. The spacecraft bit sync information shall be generated by the detector. Bit sync is a pulse occurring once each second. The bit sync signal shall be started by the first bit of the command word and shall be generated for 56 seconds after the start of the word.

3.1.4 Subsystem Elements

The command subsystem shall be comprised of the following two elements:

a. The command detector

b. The command decoder

3.2 Command Detector

3.2.1 Block Diagram

Figure 3.2-1 is a logic diagram of the command detector.

3.2.2 Sequence of Operation

The command subcarrier is frequency-shift-keyed in the following manner. When a binary "one" is being transmitted, the frequency is that of the ONE tone. At all other times, the frequency is that of the ZERO tone.

3.2.2.1 Detection

The FSK-modulated subcarrier is first passed through the input amplifier and then into the bandpass filter which has a bandpass of 100 cycles centered between the ONE frequency and the ZERO frequency. From the bandpass filter, the signal passes through the limiter amplifier into the tuning fork bandpass filter. The narrow-band tuning fork filter receives the amplitude limited signal and further discriminates against any signals which are not precisely at the frequency of the ONE tone of the modulated subcarrier. The ZERO tone which is 30 cycles below the ONE tone produces zero output (-25db) from the tuning fork filter. When the modulated subcarrier is at the ONE frequency, the output of the output amplifier is converted to a dc voltage by the envelope detector. Conversely, when the

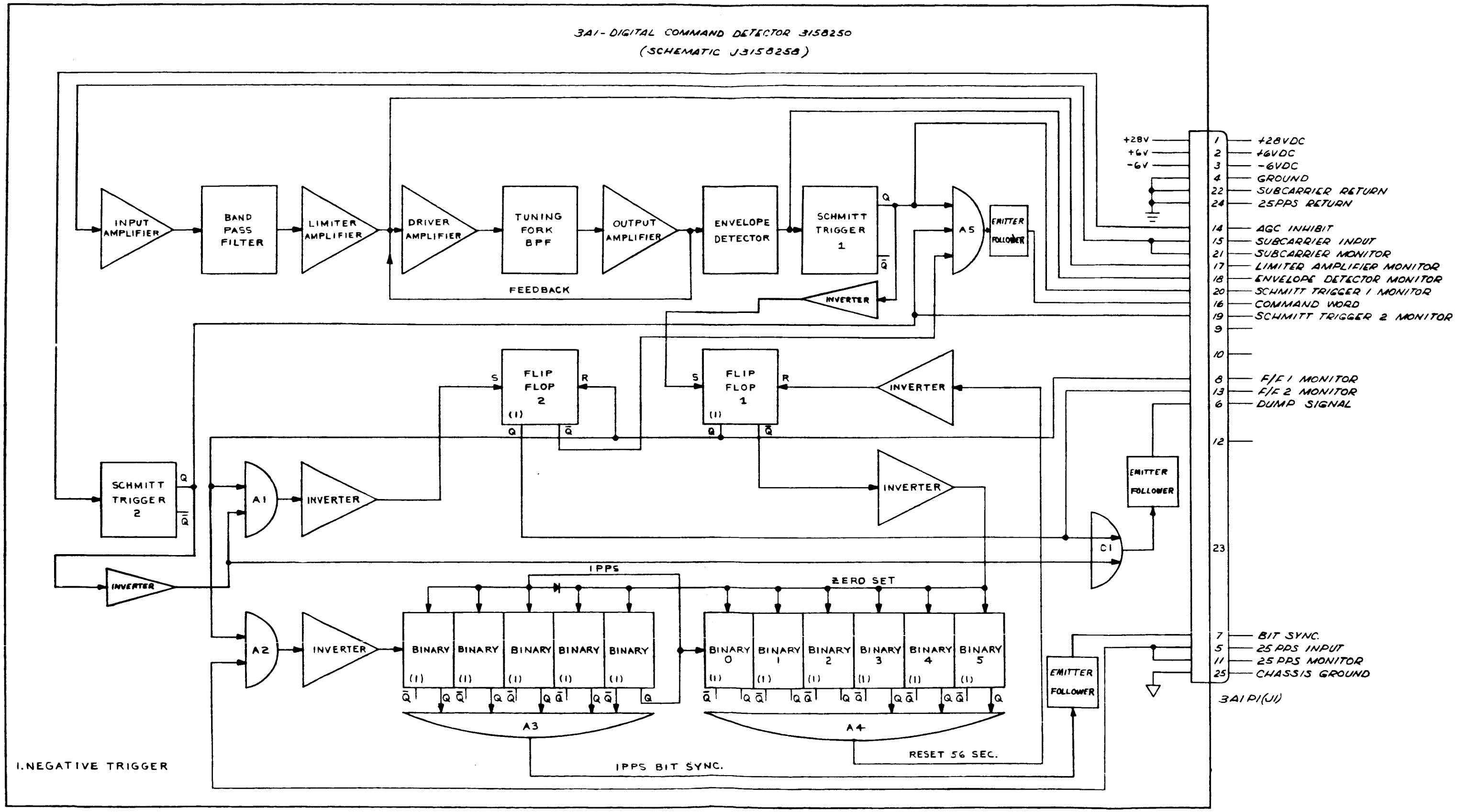

Figure 3. 2-1. Command Detector

subcarrier is at the ZERO frequency, the filter output is negligible, and the output of the envelope detector is zero.

The dc signal from the envelope detector actuates a Schmitt trigger (STI) which generates binary "ones" and "zeros" going to gate A5. If gate A5 is open, the binary "ones" and "zeros" are passed through the emitter follower and out of the command detector.

The output of STI is only one of three inputs to gate A5. A second input is received from another Schmitt trigger (ST2), which produces a "one" when the transponder AGC is at a sufficient level to insure acceptable signal-to-noise ratios. The output of flip-flop 2 (FF2) also goes to A5 and during a normal cycle of operation it produces a "one" output. ST2 and FF2 then must gate A5 to allow a command word to appear at the output of the command detector.

3.2.2.2 Sync

The digital logic of the command detector consists of two flip-flops which control gating functions, and a series of 11 binary dividers which count down from the 25 pps clock input to produce a 1 pps bit sync pulse and a reset pulse at the end of a 56-second counting period. The normal sequence of events in the operation of the sync circuits of the command detector shall be as follows:

a. An AGC signal of sufficient amplitude is applied to ST2 which produces a binary "one" which is applied to A5 and a binary "zero" which is applied to gates A1 and 01.

b. The framing bit is received by the command detector which produces a binary "one" at the output of ST1. This bit is sent to gate A5 and inverted to FF1.

c. The negative voltage step at the input of FF1 sets the flip-flop and produces a binary "one" which opens gates A1 and A2.

d. 25 pps clock pulses pass through gate A2 and into the binary divider chain where they are counted down to a 1 pps rate for the bit sync pulses and the reset pulse on the 56th bit sync pulse. The bit sync pulse is delayed 320 ms from the leading edge of the framing bit. Next, the bit sync pulse is passed through an emitter follower and appears at the output of the command detector.

e. The reset pulse is used to reset FF1 which closes gates A1 and A2 and which produces a reset pulse for FF2 and the binary divider chain thereby completing a cycle of operation.

f. If the AGC should drop below threshold while gate A1 is closed, a binary "zero" will be produced by ST2, inverted, and applied to gates A1 and 01 which produces an inhibit-dump signal at the output of the command detector. The binary "zero" is applied directly to gate A5. When the AGC rises, the inhibit-dump signal is removed immediately.

g. If the AGC should drop below threshold while the command detector is in a cycle of operation and gate A1 is open, a binary "zero" will be produced by ST2, inverted, and applied to gates A1 and 01 which produces an inhibit-dump signal at the output of the command detector. However, since gate A1 is open, the signal passes through and sets FF2 which applies a binary "one" to gate 01 to maintain the inhibit-dump signal and a binary "zero" to gate A5 to block any command information which may appear. The binary "zero" from ST2 is also applied to gate A5. When the AGC rises, the inhibit-dump signal is not removed until FF2 is reset at the end of the cycle.

3.3 Command Decoder

3.3.1 Block Diagram

Figure 3.3-1 is a logic diagram of the command decoder.

3.3.2 Sequence of Operation

The bit sync pulses from the command detector trigger a single shot chain which produces three sync pulses staggered in time. P1 is the timing pulse, P2 is the stored command sync pulse, and P3 is the read-in (shift) pulse.

The binary command received from the command detector is applied to a Schmitt trigger for shaping and for producing the complementary outputs required by the shift registers. The normal sequence of events in the operation of the command decoder is as follows:

a. The framing bit sets flip-flop 1 (FF1) which opens gates A1 and A3. Opening Gate A1 allows the timing pulse P1 to reach the binary counting chain and opening Gate A3 allows pulse P3 to shift the first bit into the shift registers. Each succeeding bit sync pulse generates P1 and P3 to continue the count and to continue shifting the command into the shift registers.

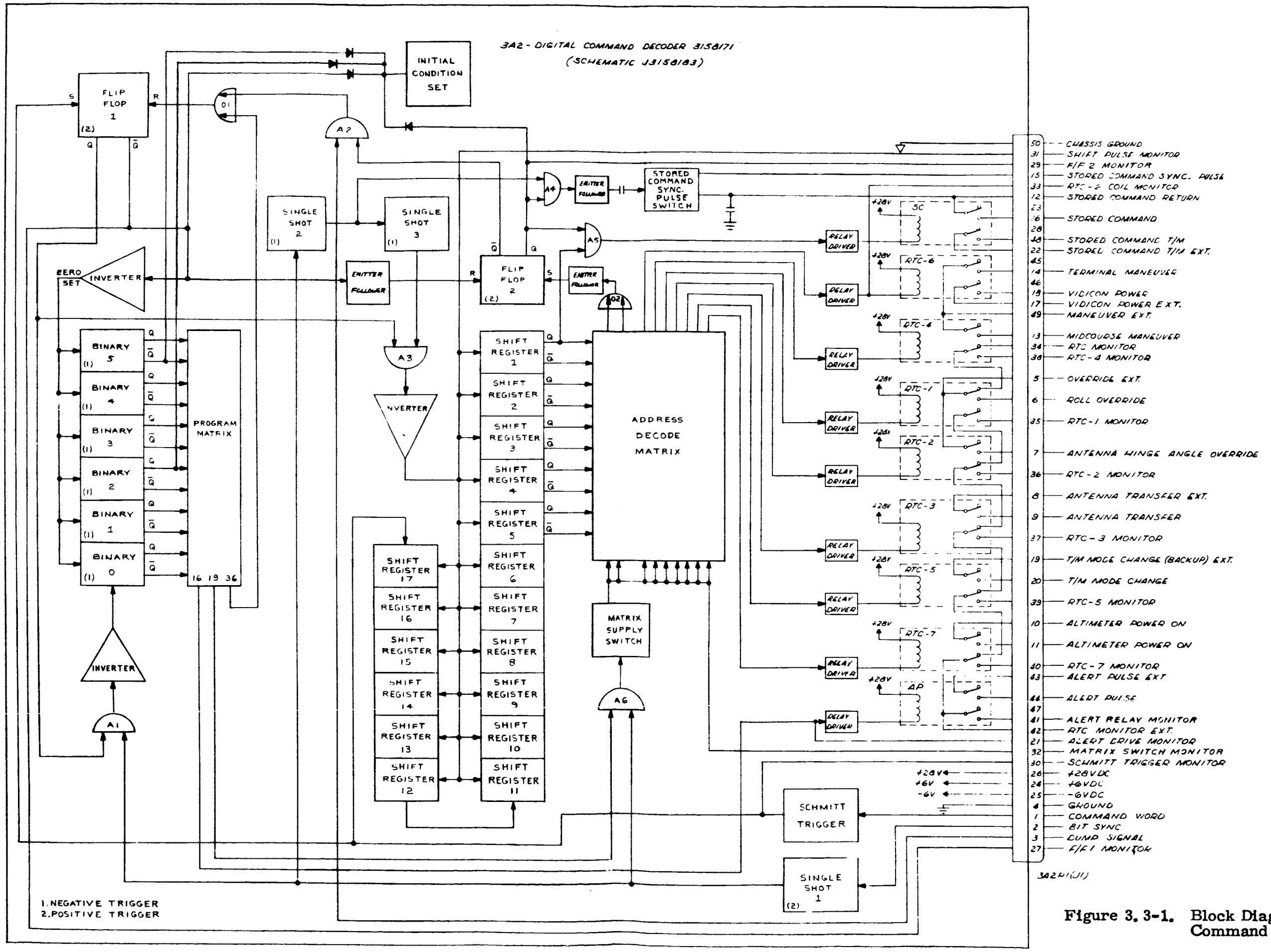

Figure 3. 3-1. Block Diagram Command Decoder

b. On the 16th count, the program matrix produces a pulse which operates a relay driver. The relay closure is used by CC&S as an "alert" pulse.

c. After the 18th read-in pulse, the shift registers have the five address bits in shift registers 1 through 5 and the magnitude and polarity bits in shift registers 6 through 17. The framing bit has been shifted out and lost.

d. On the 19th count, a pulse is produced by the program matrix and applied to gate A6 allowing the 19th P1 to trigger the matrix supply switch. The pulse from the matrix supply switch is applied to the address decode matrix where it is routed to the appropriate output line by the command address contained in shift registers 1 through 5.

e. If the address is that of a real-time command, the matrix supply pulse is routed to the appropriate relay driver and produces a relay closure for the duration of the pulse.

f. If the address is that of a stored command, the matrix supply pulse is routed through gate 02 to set flip-flop 2 (FF2).

g. When FF2 is set it opens gates A4 and A5 and closes gate A2. Gate A4 allows P2 to trigger the stored command sync pulse switch to supply sync pulses to CC&S to store the command. Gate A5 allows the command bits to operate the stored command relay and transfer the command bits to the CC&S and to the data encoder for monitoring. Gate A2 prevents the inhibit-dump signal from resetting FF1.

h. On the 36th count, the program matrix produces a pulse which passes through gate 01 and resets FF1. When FF1 is reset it closes gates A1 and A3, resets FF2, and resets the binary counting chain to "zero".

i. If an inhibit-dump signal is applied while a stored command is being read into the CC&S, it is blocked by gate A2. This is done because the entire command is stored in the command decoder at this time and there is no reason to inhibit the read-out. If an inhibit-dump signal is applied while a command is being read into the command decoder, it passes through gates A2 and 01, resetting FF1 and terminating the cycle thereby preventing an incomplete command from being acted on. If FF1 is reset, the inhibit-dump signal has no effect.

j. The initial condition set circuit prevents any command from being generated upon initial power application.

4.0 Boundaries (Interfaces) and Parameters

The command system input shall be a modulated subcarrier signal from the spacecraft 890/960 mc transponder. The signal ground shall be common between these two systems. DC isolation shall be maintained between the command system and all other spacecraft systems. The real-time command relays shall be contained and controlled by the command system. Each real-time command user shall have an isolated set of contacts on the assigned relay. The stored (quantitative) commands shall be supplied to the CC&S in the form of serial binary coded words of fixed length. One command system monitor signal shall be applied to the data encoder and telemetered.

4.1 Boundary Definitions

4.1.1 Command Detector

The signal inputs and outputs of the command detector shall be as follows:

a. Subcarrier input from transponder.

b. AGC input from transponder.

c. 25 pps clock input from CC&S.

d. Command word output to decoder.

e. Bit sync output to decoder.

f. Inhibit-dump signal output to decoder.

4.1.2 Command Decoder

The signal inputs and outputs of the command decoder are as follows:

a. Command word input from detector.

b. Bit sync input from detector.

c. Inhibit-dump signal input from detector.

d. Alert pulse relay closure output to CC&S.

e. Real-time relay closure (7 each) outputs to appropriate users.

f. Stored command sync pulse output to CC&S.

g. Stored command relay closure output to appropriate users.

4.1.3 Command Subsystem and GSE

The following signals shall be made available to be monitored by the command ground support equipment (GSE) through a direct access connector:

a. Subcarrier input.

b. 25 pps clock input.

c. Command word output.

d. Bit sync output.

e. Inhibit-dump signal output.

f. Alert pulse relay closure output.

g. Real-time relay closure outputs.

h. Stored command sync pulse output.

i. Stored command relay closure output.

The following additional signals shall be made available to be monitored by the GSE in a bench test configuration:

j. +28 vdc.

k. + 6 vdc.

l. - 6 vdc.

m. Limiter amplifier output.

n. Envelope detector output.

o. Schmitt trigger 1 (detector) output.

p. Schmitt trigger 2 (detector) output.

q. Flip-flop 1 (detector) output.

r. Flip-flop 2 (detector) output.

s. Shift pulse output.

t. Alert pulse drive output.

u. Matrix supply pulse output.

v. Schmitt trigger (decoder) output.

w. Flip-flop 1 (decoder) output.

x. Flip-flop 2 (decoder) output.

y. Relay driver 6 output.

4.2 Parameters

The threshold signal-to-noise ratio for the command subcarrier shall be no greater than +20 db in a 5 cycle bandwidth. At this signal-to-noise ratio, the bit error probability shall be no greater than 1×10^{-5}. The amplitude threshold of a noise free signal is 100 mv rms or better. The command rate is one bit per second with a minimum time of 57 seconds between separate command transmissions. A command consists of 18 non-return-to-zero bits. The first bit is a framing bit, the next five are the address, and the next twelve are data.

5.0 Constraints

5.1 Number of Commands

The decoder is mechanized to decode 7 real-time commands and 6 stored commands. It has 7 real-time command lines and two stored command lines. The decoder may be programmed to recognize as many as 24 stored commands and 7 real-time commands.

5.2 Total Power Consumption

The total allowable power consumption of the command subsystem shall not exceed 3.69 watts. The nominal power consumption is 2.37 watts steady-state with peaks of 3.61 watts. This power shall be divided as follows:

a. Command Detector

1. +28 vdc - 1540 mw
2. + 6 vdc - 270 mw
3. - 6 vdc - 75 mw

b. Command Decoder

1. +28 vdc - 15 mw s-s, 1260 mw peak
2. + 6 vdc -390 mw
3. - 6 vdc - 75 mw

5.3 Maximum Volume

The maximum allowable volume of the command subsystem shall not exceed 1980 cm^3 which is divided as follows:

a. Command Detector - 1260 cm^3

b. Command Decoder - 720 cm^3

5.4 Maximum Weight

The maximum allowable weight of the command subsystem shall be that allotted in the Design Parameter Functional Specification, RA 345-4-120.

5.5 Operational Constraints

It is necessary to transmit two framing bits after power turn-on, and before each group of commands or independent commands to insure that the logic is correctly set for command reception and not in some random state due to power transients. The maximum command rate is one command every 57 seconds.

5.6 Environment

The command subsystem shall be designed to be capable of operating in the following environments.

a. Maximum temperature +75°C

b. Minimum temperature -15°C

c. Free space vacuum

d. Static acceleration 14g maximum

e. Vibration:

1. 15g rms noise maximum
2. 4.5g rms noise and 4.5g sinusoid (1500 cps maximum) maximum

6.0 Interface Characteristics

6.1 The signal characteristics of each boundary in paragraph 4.1 is described in table 6.1-1.

6.2 Power Requirements

The power requirements for the command subsystem are given in table 6.2-1.

Table 6.1-1

SIGNAL	CONDITION	AMPLITUDE	DURATION	IMPEDANCE	FREQUENCY
DETECTOR SIGNALS					
Subcarrier into detector	On	$1.0^{+0.2}_{-0.8}$ V rms	Continuous	2.8±0.2K(Det. Input)	f_{One} or f_{Zero}
AGC	On	3±0.5V	Continuous	30±10K(Det. Input)	NA
25 pps (from CC&S)	On	5.5±0.8V	1 ±0.3 ms	1±0.05K(Det. Input)	25 pps
Limiter Amplifier	Saturated	1.8 ±0.3V_{p-p}	NA	NA	f_{Zero}
Envelope Detector	One Zero	+2.9±0.2V -0.9±0.2V	Rise & fall times ≤ 200 m sec	NA	NA
Schmitt Trigger 1	One Zero	>4.0V <0.4V	NA	NA	NA
Schmitt Trigger 2	One Zero	>4.0V <0.4V	NA	NA	NA
Flip-flop 1	One Zero	>4.0V <0.4V	NA	NA	NA
Flip-flop 2	One Zero	>4.0V <0.4V	NA	NA	NA

(Continued)

Table 6.1-1 (Continued)

SIGNAL	CONDITION	AMPLITUDE	DURATION	IMPEDANCE	FREQUENCY
DETECTOR-DECODER SIGNALS					
Command Word Input	One Zero	>2.0V <0.4V	NA	>8.2K(Dec. Input)	1 Bit/Sec
Bit Sync (Decoder Input)	On Off	>2.0V <0.4V	40±4 ms with rise time <10μ sec.	≈1K (Dec. Input) 47K	1 pps
Inhibit-dump	On Off	>2.0V <0.4V	NA	12K (Dec. Input) 12K	NA

(Continued)

Table 6.1-1 (Contined)

SIGNALS DECODER SIGNALS	CONDITION	AMPLITUDE	DURATION	IMPEDANCE	FREQUENCY
Alert Pulse	On Off	NA NA	1±0.1 sec NA	0 ∞	NA NA
Real-time Command Relay	On Off	NA NA	150±50 ms NA	0 ∞	NA NA
Stored Command Sync Pulse	On Off	<0.2V ≥12 V	10±5 ms Fall time ≤1μ sec Rise time ≤375μ sec.	<200 Ω >1 MΩ	1 pps
Stored Command	One Zero	NA NA	NA NA	0 ∞	NA NA
Shift Pulse	On Off	<0.4V >5.0V	30±10ms NA	<200 NA	1 pps
Alert Pulse Drive	On Off	>4.0V <0.4V	1±0.1 sec NA	NA NA	NA NA
Matrix Supply Pulse	On Off	>5.0V < 0.2V	150±50 ms NA	NA NA	NA NA
Schmitt Trigger (Decoder)	One Zero	>4.0V <0.4V	NA NA	NA NA	NA NA
Flip-flop 1 (Decoder)	One Zero	>3.2V <0.4V	NA NA	NA NA	NA NA
Flip-flop 2 (Decoder)	One Zero	>4.0V <0.4V	NA NA	NA NA	NA NA
Relay Drivers	On Off	<1.0V >27.7V	150±50 ms NA	NA NA	NA NA

(Continued)

Table 6.1-1 (Continued)

SIGNAL	CONDITION	AMPLITUDE	DURATION	IMPEDANCE	FREQUENCY
SIGNALS TO GSE					
Alert Pulse	On Off	6V 0V	1±0.1 Sec NA	NA NA	NA NA
Real-Time Command	On Off	6V 0V	150±50 ms NA	NA NA	NA NA
Stored Command	On Off	>4V 0V	NA NA	NA NA	NA NA

Table 6.2-1

SUPPLY	TOLERANCE	NORMAL CURRENT	MAX RIPPLE	MAX NOISE	REMARKS
+28 Vdc (Detector)	±10%	55 ma	800 mv p-p	800 mv p-p	The power supply for the command system is designed to cut out if any load current or combination of load currents is excessive enough to cause the input current to the converter to exceed approximately 50 percent of its normal value.
+28 Vdc (Decoder)	±10%	Avg. Load < 1 ma Peak ≈45 ma			
+6Vdc	±5%	110 ma	300 mv p-p	300 mv p-p	
-6Vdc	±5%	25 ma	300 mv p-p	300 mv p-p	

(Insert in Spacecraft Design Specification Book)

APPROVED:
System: M. R. Mesnard
Subsystem: C. A. Bullock

JET PROPULSION LABORATORY

Spec. No. RA345-4-330
Dated: 9 Feb. 1962

FUNCTIONAL SPECIFICATION
SPACECRAFT RANGER 345 GROUND EQUIPMENT
TELEMETRY SUBSYSTEM

1.0 SCOPE

1.1 This specification covers the functional requirements for the Ranger RA-3, 4, &5 Ground Telemetry Subsystem that are necessary to perform the functions of filtering, demodulating, decommutating, decoding, and data processing for telemetering spacecraft engineering and scientific parameters.

1.2 This specification includes the functional requirements for ground check-out of the spacecraft telemetry subsystem.

1.3 This specification does not cover the requirements for the transmission and/or transportation of telemetry data from the DSIF to JPL.

1.4 This specification does not cover the requirements for receiver demodulation functions.

2.0 APPLICABLE DOCUMENTS

2.1 The following documents form a part of this specification: (See section 4).

SPECIFICATIONS

Jet Propulsion Laboratory

30539-B	Digital Decommutator and Decoding System
	Ranger Spacecraft Design Specification Book

3.0 REQUIREMENTS

3.1 Ground Telemetry Subsystem Design

The ground telemetry equipment shall be designed to test, recover, and process the spacecraft signals which are contained in the spacecraft telemetry composite signal. The subsystem shall reproduce a signal equivalent to any specified telemetry input.

3.1.1 Telemetry Record Production

Field stations participating in the launching, tracking, and data recovery shall generate locally only those end records which will assist real time operations. Telemetry and ground instrumentation data shall be stored on magnetic tapes and sent to the JPL Telemetry Data Reduction Laboratory (DRL) for processing and distribution.

3.1.2 Telemetry Measurements

The spacecraft measurement program shall include the data listed on the JPL Telemetering Channel Assignment, JPL Specification RA345 Appendix IV, and additional receiving station instrumentation measurements. These measurements will be grouped into three categories.

a. Spacecraft Engineering Measurements

b. Scientific Experiment Measurements

c. Ground Station Instrumentation Measurements

3.1.3 Forms of Data Presentation

Data Reduction Laboratory records shall be produced in several forms depending upon whether the data is developed for immediate human observation or for further machine processing. Spacecraft ground telemetry readouts and storage at each location shall consist of one or more of the following:

a. Visual display of subcarrier frequency

b. Oscillographic charts of analog measurements

c. Tabular printout of spacecraft data

d. Magnetic tape recordings

e. Demodulated spacecraft signals for the further use of the Scientific Measurements Group

3.2 Location Requirements

Ground telemetry subsystems will be required at the following locations in order to perform necessary operations. The equipment requirements for each site are itemized in table 3.2-1.

3.2.1 JPL Site

The ground telemetry program at the JPL site shall require:

a. Development support during environmental testing of spacecraft systems

b. Development support during spacecraft assembly and testing operations

c. Data reduction and processing of both systems testing and actual flight results

3.2.1.2 Installation at JPL

The ground telemetry subsystem will require equipment installations in the following locations at JPL in order to comply with functional requirements:

a. Spacecraft Assembly Facility

b. Environmental Laboratory

c. Data Reduction Laboratory (DRL)

d. Dummy Run Telemetry Station

3.2.2 Launch Site

Launch site program requirements for ground telemetry shall include:

a. Development support during spacecraft assembly and testing operations

b. Spacecraft data demodulation and storage for systems testing and launch operations

3.2.2.1 Installations at the Launch Site

The ground telemetry subsystem shall require equipment installation at the following locations within the launch site:

a. Missile Assembly Building

b. Blockhouse

c. Launch Checkout Telemetry Trailer

Table 3.2-1. Summary of Ground Telemetry Equipment for Spacecraft RA-345

Area	Station Requirement	System Capacity				Input Signal Requirements	Power	Equipment Source
		Visual Display	Magnetic Recording	Digital Recording	Oscillographic Recording			
JPL 1. Data Reduction Laboratory	1. Space Craft Tests and Checkout 2. Data Processing 3. Record Production		7 Channels	Magnetic Tape & (High Speed Digital Photo Printer)	36 Channels	Tape or Composite Audio	110V AC 60 cps	Existing + Upgrading
2. Missile Assembly Building	Spacecraft Assembly Tests and Checkout	24 Measurements Selectable	None	High Speed Digital Photo Printer	None	Composite Audio	110V AC 60 cps	New
3. Environmental Test Laboratory	Spacecraft Tests	None	None	Printer	None	Composite Audio	110V AC 60 cps	New
JPL 4. Dummy Run Telemetry Station	Same as AMR #3	None	None	Printer	None	Composite Audio	110V AC 60 cps	New
AMR 1. Launch Checkout Telemetering Trailer	1. Space-Craft Assembly Tests and Checkout 2. Data Recording 3. Record Production	None	7 Channels	Printer	36 Channels	Tape or Composite Audio	208V 3Ø 60 cps	New
2. Hangar Assembly Area	1. Space Craft Assembly Tests and Checkout 2. Flight Data Display	12 Measurements Selectable	None	High Speed Digital Photo Printer	None	Composite Audio	110V AC 60 cps	New
3. Block-House	Spacecraft Compatibility Tests & Prelaunch Checkout	None	None	Printer	None	Composite Audio	110V AC 60 cps	New

3.3 Station Requirements

3.3.1 Telemetry Ground System

The typical telemetry ground system (station) shall test, recover, and process spacecraft telemetry composite signals and shall reproduce a signal equivalent to any spacecraft telemetry input (see figure 3.3.1-1). The typical ground system will not include the function of demodulating the scientific instrument signals.

3.3.2 Data Reduction Laboratory

The telemetering data reduction laboratory shall contain systems that store, demodulate, decode, and display spacecraft telemetering data (see figure 3.3.1-1).

3.3.2.1 Magnetic Tape Storage

Scientific and Engineering measurement data which is to be delivered to the computer and scientific data which is to be processed by the scientific measurements groups shall be stored on digital magnetic tape which will be prepared simultaneously with "quick look" records. A digital tape recorder shall be used to store the engineering measurement data for further reduction in the Digital Record Production Station.

3.3.2.2 Digital/Analog Charts

The digital/analog charts for individual engineering measurements shall be printed on a modified oscillographic recorder. Format shall be as illustrated in figure 3.3.2.2-1. Analog representations of each digital sample are sequentially registered on a calibrated chart. Selected measurement samples are printed in a tabular digital display down the length of the chart. Other digits provide Greenwich Mean Time (G.M.T.) time labels and indicate ground equipment conditions (hence, data validity) for the reported samples. Chart speed shall be determined by the limit of visual resolution, the density of digitalized sampling desired, and the real-time repetition rate (period) of the commutator. Table 3.3.2.2.-5 indicates the chart lengths for various measurements. This table assumes a minimum analog sample chart length of 0.01" as the limit of reproducible visual resolution. Digital character height is 0.1", spacing of 8 lines per inch.

3.3.2.3 Normal Telemetering Data Laboratory Record

The normal "quick look" record for a 10-hour tracking period will depend upon the sampling rate of the commutator. There shall be four commutator rates:

a. For the Yaw Rate Gyro measurement No. 5A2 (40 ms sample, 200 ms period) the chart would be about 90 inches long (30 minute period); the total number of digital lines printed: 563; the ratio of measurements reported digitally: 1 in 16. See figure 3.3.2.2-1.

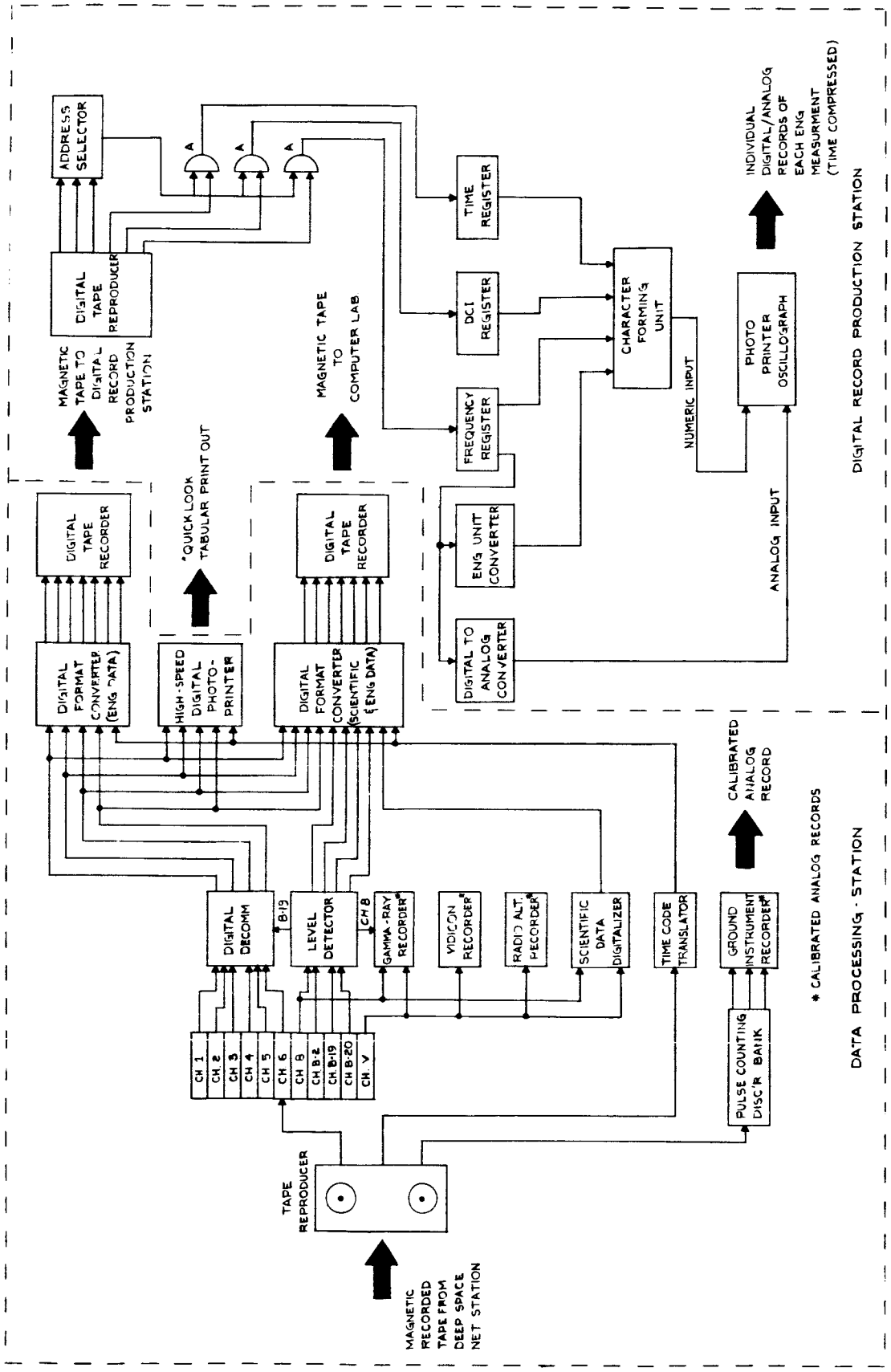

Figure 3.3.1-1. Ranger Telemetering Data Reduction Station

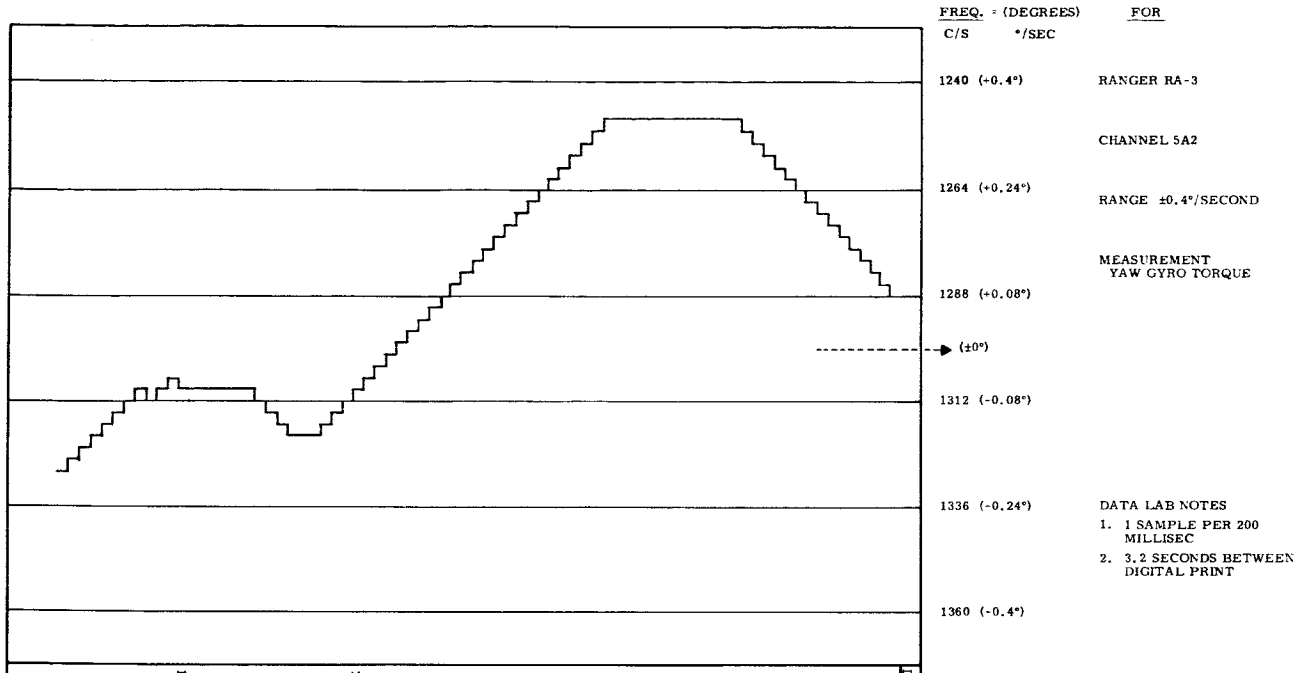

DAYS	HOURS	MINUTES	SECONDS	STATION ID	DATA CONT	FREQ.	ENG. UNITS
110	10	11	33	2	1	1310	-0.06
110	10	11	30	2	1	1310	-0.06
110	10	11	26	2	1	1287	+0.22
110	10	11	23	2	1	1248	+0.35
110	10	11	20	2	1	1283	+0.12

Figure 3.3.2.2-1. Typical Digital/Analog Chart for Rate 1 Measurement

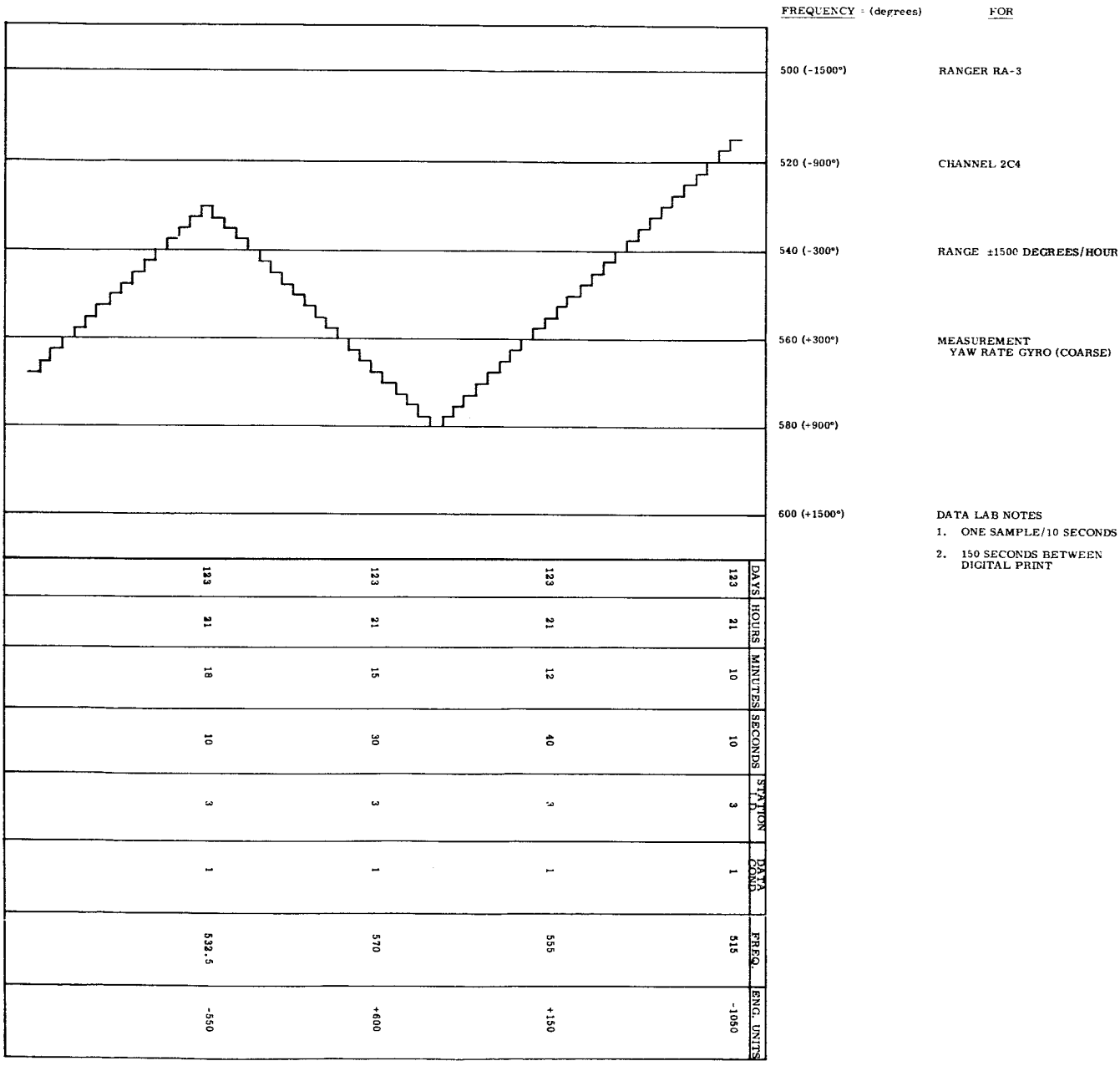

Figure 3.3.2.2-2. Typical Digital/Analog Chart for Rate 2 Measurement

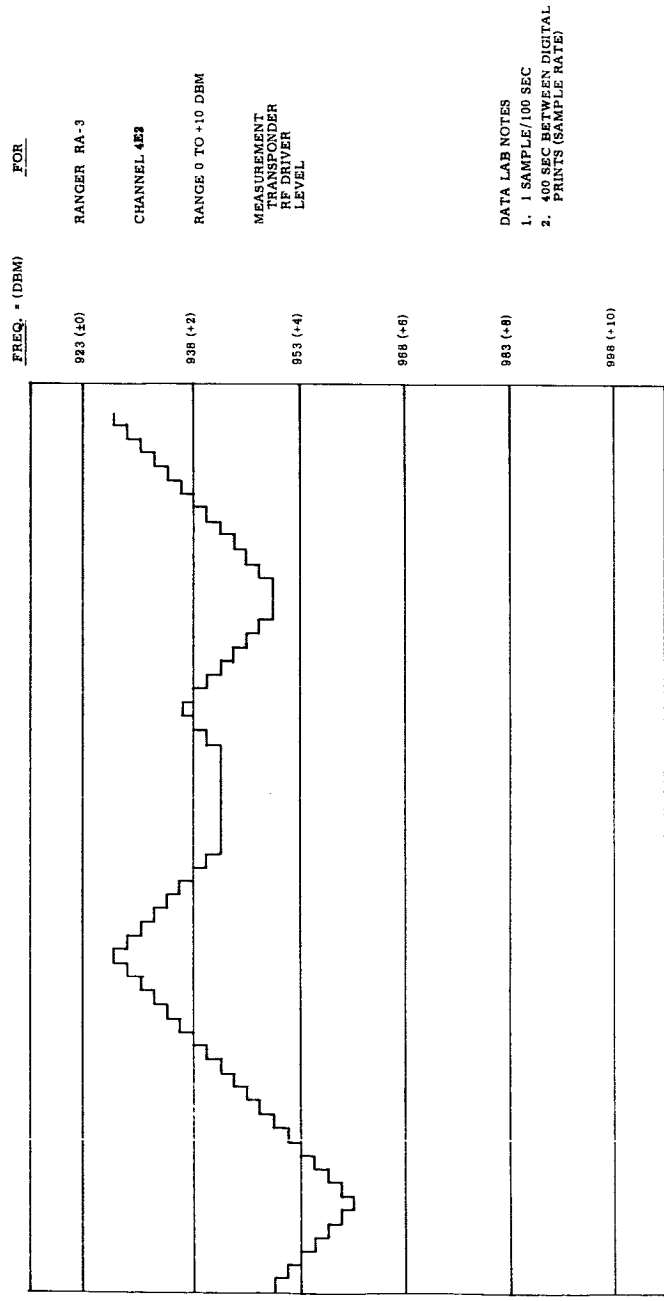

DAYS	HOURS	MINUTES	SECONDS	STATION I. D.	DATA COND.	FREQ.	ENG. UNITS
110	1	1	10	2	1	920	+ .50
110	1	7	50	2	1	935	+1.50
110	1	14	30	2	1	943	+2.75
110	1	21	10	2	1	950	+3.50
110	1	27	50	2	1	948	+3.00
110	1	34	30	2	1	938	+2.00
110	1	41	10	2	1	941	+2.50
110	1	47	50	2	1	941	+2.50
110	1	54	30	2	1	939	+2.25
110	2	1	40	2	1	933	+1.25
110	2	8	20	2	1	929	+1.00
110	2	15	0	2	1	93[illegible]	+2.00
110	2	21	40	2	1	948	+3.00
110	2	28	20	2	1	953	+4.00
110	2	35	0	2	1	959	+5.00
110	2	41	40	2	1	940	+4.00

Figure 3.3.2.2-3. Typical Digital/Analog Record for Rate 3 Measurements

FOR

RANGER RA-3

CHANNEL 4H4

RANGE 0 to +4.5 VDC

MEASUREMENT
POWER 400 CPS 1 PHASE
INVERTER VOLTS

DATA LAB NOTES
1. 1 SAMPLE PER 1000 SEC (PER STEP)
2. 1000 SECONDS BETWEEN DIGITAL PRINT

FREQ. (VDC)

923 (0)

938 (+0.9)

953 (+1.8)

968 (+2.7)

983 (+3.6)

998 (+4.5)

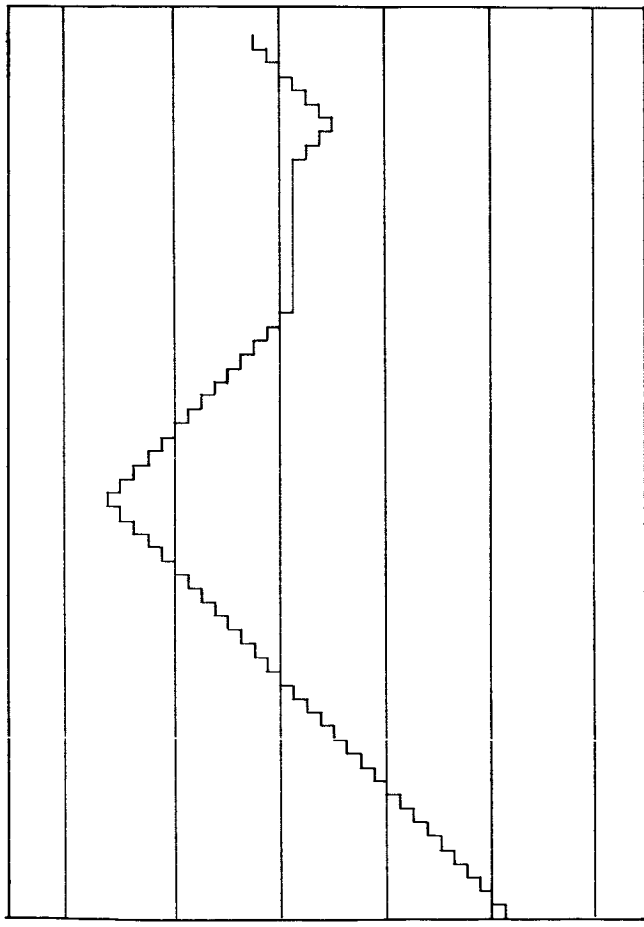

DAYS	HOURS	MINUTES	SECONDS	STAT ID	DATA COND	FREQ.	ENG. UNITS
15	4	3	4	5	1		
15	4	19	44	5	1	949	1.57
15	4	36	24	5	1	951	1.69
15	4	53	4	5	1	953	+1.80
15-	5	9	48	5	1	955	1.91
15	5	26	28	5	1	957	2.03
15	5	43	8	5	1	959	2.14
15	5	59	48	5	1	961	2.25
15	6	16	28	5	1	959	2.14
15-	6	33	8	5	1	957	2.03
15	6	49	48	5	1	955	1.91
15	7	6	28	5	1	955	1.91
15	7	23	8	5	1	955	1.91
15	7	29	48	5	1	955	1.91
15-	7	56	28	5	1	955	1.91
15	8	13	8	5	1	955	1.91
15	8	29	48	5	1	955	1.91
15	8	46	28	5	1	955	1.91
15	9	3	8	5	1	955	1.91
15+	9	19	48	5	1	955	1.91
15	9	36	28	5	1	955	1.91
15	9	53	8	5	1	955	1.91
15	10	9	48	5	1	953	1.80
15	10	26	28	5	1	951	1.69
15-	10	43	8	5	1	949	1.58
15	10	59	48	5	1	947	1.46
15	11	16	28	5	1	945	1.35
15	11	33	8	5	1	943	1.23
15	11	49	48	5	1	941	1.12
15+	12	6	28	5	1	939	1.01
15	12	23	8	5	1	938	+0.90
15	12	39	48	5	1	936	+0.78
15	12	56	28	5	1	934	+0.67
15	13	13	8	5	1	932	+0.56
15	13	29	48	5	1	930	+0.45
15	13	46	28	5	1	928	+0.33
15	14	3	8	5	1	930	+0.45
15	14	19	48	5	1	932	+0.56
15	14	36	28	5	1	934	+0.67
15+	14	53	8	5	1	936	+0.78
15	15	9	48	5	1	938	+0.90
15	15	26	28	5	1	940	+1.01
15	15	43	8	5	1	942	+1.12
15	15	59	48	5	1	944	+1.23
15	16	16	28	5	1	946	+1.35
15	16	33	8	5	1	948	+1.46
15	16	49	48	5	1	950	+1.57
15	17	6	28	5	1	952	+1.69
15	17	23		5	1	953	+1.80
15+	17	39	48	5	1	955	+1.92
15	17	56	28	5	1	957	+2.03
15	18	13	8	5	1	959	+2.14
15	18	29	48	5	1	961	+2.25
15	18	46	28	5	1	963	+2.37
15	19	3	8	5	1	965	+2.48
15	19	19	48	5	1	967	+2.59
15	19	36	28	5	1	968	+2.70
15	19	53	8	5	1	970	+2.82
15	20	9	48	5	1	972	+2.93
15+	20	26	28	5	1	974	+3.04
15	20	43	8	5	1	976	+3.15
15	20	59	48	5	1	978	+3.26
15	21	16	28	5	1	980	+3.37
15	21	33	8	5	1	982	+3.49

Figure 3.3.2.2-4. Typical Digital Analog Record for Rate 4 Measurement

Production of "Quick Look" Records for Ranger RA-3, 4, & 5

Channel	Decom. Address	Measurement	Range	Commutator Sample Length	Commutator Sample Period	Measurements per Hour	Digital Printout Period	Ratio of Printouts	Record Length per Hour
5A0	10	Helium Tank Pressure	0 to 3600 psia	40 ms	200 ms	18×10^3	3.2 sec.	1 in 16	180"
5A1	11	Fuel Tank Pressure	0 to 460 psia	40 ms	200 ms	18×10^3	3.2 sec.	1 in 16	180"
5A2	12	Yaw Gyro Torque	±0.4° per sec.	40 ms	200 ms	18×10^3	3.2 sec.	1 in 16	180"
5A3	13	Roll Gyro Torque	±0.4° per sec.	40 ms	200 ms	18×10^3	3.2 sec.	1 in 16	180"
5A4	14	Pitch Gyro Torque	±0.4° per sec.	40 ms	200 ms	18×10^3	3.2 sec.	1 in 16	180"
6B0	20	+Y Yaw Jet Vane Angle	±25°	40 ms	200 ms	18×10^3	3.2 sec.	1 in 16	180"
6B1	21	-Y Yaw Jet Vane Angle	±25°	40 ms	200 ms	18×10^3	3.2 sec.	1 in 16	180"
6B2	22	+X Pitch Jet Vane Angle	±25°	40 ms	200 ms	18×10^3	3.2 sec.	1 in 16	180"
6B3	23	-X Pitch Jet Vane Angle	±25°	40 ms	200 ms	18×10^3	3.2 sec.	1 in 16	180"
6B4	24	Channel 6 Hi-Calibration	1760 cps	40 ms	200 ms	18×10^3	3.2 sec.	1 in 16	180"
2C0	30	Roll Position (Earth Sensor)	±2.5°	1 sec.	10 sec.	360	160 sec.	1 in 16	3.6"
* 2D0	30	M/C Motor Chamber Temp.	0 to 2000° F.	1 sec.	10 sec.	360	160 sec.	1 in 16	3.6"
2C1	31	Hinge Earth Sensor Out	±2.5°	1 sec.	10 sec.	360	160 sec.	1 in 16	3.6"
* 2D1	31	-Y Yaw Jet Vane Actuator Temperature	0 to 500° F.	1 sec.	10 sec.	360	160 sec.	1 in 16	3.6"
2C2	32	Pitch Switching Amplifier Output	Polarity	1 sec.	10 sec.	360	160 sec.	1 in 16	3.6"
* 2D2	32	M/C Motor Chamber Temp.	0°F to 2000°F	1 sec.	10 sec.	360	160 sec.	1 in 16	3.6"
2C3	33	Yaw Switching Amplifier Output	Polarity	1 sec.	10 sec.	360	160 sec.	1 in 16	3.6"
* 2D3	33	M/C Motor Chamber Temp.	0°F to 2000°F	1 sec.	10 sec.	360	160 sec.	1 in 16	3.6"

* Mode II Measurement only.

Table 3.3.2.2-5
(See pages 12 thru 16)

Channel	Decom. Address	Measurement	Range	Commutator Sample Length	Commutator Sample Period	Measurements per Hour	Digital Printout Period	Ratio of Printouts	Record Length per Hour
2C4	34	Yaw Rate Gyro (Coarse)	±1500° per hour	1 sec.	10 sec.	360	160 sec.	1 in 16	3.6"
* 2D4	34	M/C Motor Chamber Temp.	0°F to 2000°F	1 sec.	10 sec.	360	160 sec.	1 in 16	3.6"
2C5	35	Pitch Rate Gyro (Fine)	±62° per hour	1 sec.	10 sec.	360	160 sec.	1 in 16	3.6"
* 2D5	35	Fuel Tank Temperature	-25°F to +165°F	1 sec.	10 sec.	360	160 sec.	1 in 16	3.6"
2C6	36	Yaw Rate Gyro (Fine)	±62° per hour	1 sec.	10 sec.	360	160 sec.	1 in 16	3.6"
* 2D6	36	M/C Motor Chamber Temp.	0°F to 2000°F	1 sec.	10 sec.	360	160 sec.	1 in 16	3.6"
2C7	37	Roll Rate Gyro (Fine)	±62° per hour	1 sec.	10 sec.	360	160 sec.	1 in 16	3.6"
* 2D7	37	M/C Motor Chamber Temp.	0°F to 2000°F	1 sec.	10 sec.	360	160 sec.	1 in 16	3.6"
2C8	38	Earth Sensor Light Intensity	0.01 to 17 foot-candles	1 sec.	10 sec.	360	160 sec.	1 in 16	3.6"
* 2D8	38	M/C Motor Chamber Temp.	0°F to 2000°F	1 sec.	10 sec.	360	160 sec.	1 in 16	3.6"
* 2D9	39	M/C Motor Chamber Temp.	0°F to 2000°F	1 sec.	10 sec.	360	160 sec.	1 in 16	3.6"
3D0	40	Receiver AGC (Coarse)	-50 to -140 dbm	1 sec.	10 sec.	360	160 sec.	1 in 16	3.6"
3D1	41	Pitch Rate Gyro (Coarse)	±1500° per hour	1 sec.	10 sec.	360	160 sec.	1 in 16	3.6"
3D2	42	Receiver Phase Error (Coarse)	±3.75 VDC	1 sec.	10 sec.	360	160 sec.	1 in 16	3.6"
3D3	43	Pitch Sun Sensor Out	±0.9°	1 sec.	10 sec.	360	160 sec.	1 in 16	3.6"
3D4	44	Yaw Sun Sensor Out	±0.9°	1 sec.	10 sec.	360	160 sec.	1 in 16	3.6"
3D5	45	Receiver AGC (Coarse)	-50 to -140 dbm	1 sec.	10 sec.	360	160 sec.	1 in 16	3.6"
3D6	46	Antenna Hinge Angle	0 to 180°	1 sec.	10 sec.	360	160 sec.	1 in 16	3.6"
3D7	47	Roll Rate Gyro (Coarse)	±1500° per hour	1 sec.	10 sec.	360	160 sec.	1 in 16	3.6"
3D8	48	Power System Voltage	+18 to +31 VDC	1 sec.	10 sec.	360	160 sec.	1 in 16	3.6"

* Mode II Measurement only.

Table 3.3.2.2-5 (Cont'd)
(See pages 12 thru 16)

Channel	Decom. Address	Measurement	Range	Commutator Sample Length	Commutator Sample Period	Measurements per Hour	Digital Printout Period	Ratio of Printouts	Record Length per Hour
4E0	50	Lo Gain Antenna Drive	+10 to +35 dbm	10 sec.	100 sec.	36	400 sec.	1 in 4	1.125"
4E1	51	Hi Gain Antenna Drive	+10 to +35 dbm	10 sec.	100 sec.	36	400 sec.	1 in 4	1.125"
4E2	52	Transponder R. F. Drive Level	0 to +10 dbm	10 sec.	100 sec.	36	400 sec.	1 in 4	1.125"
4E3	53	Receiver AGC (Fine)	-100 to -140 dbm	10 sec.	100 sec.	36	400 sec.	1 in 4	1.125"
4E4	54	Transponder High Voltage Supply	0 to +250 VDC	10 sec.	100 sec.	36	400 sec.	1 in 4	1.125"
4E5	55	Receiver Phase Error (Fine)	0 to -2 VDC	10 sec.	100 sec.	36	400 sec.	1 in 4	1.125"
4E6	56	+X Panel (4A9) Amperes	0 to 5 amperes	10 sec.	100 sec.	36	400 sec.	1 in 4	1.125"
4E7	57	-X Panel (4A10) Amperes	0 to 5 amperes	10 sec.	100 sec.	36	400 sec.	1 in 4	1.125"
3F0	60	-X Panel (4A10) Volts	20 to 35 VDC	1 sec.	100 sec.	36	400 sec.	1 in 4	1.125"
3F1	61	+X Panel (4A9) Volts	20 to 35 VDC	1 sec.	100 sec.	36	400 sec.	1 in 4	1.125"
3F2	62	Power Converter A/C (4A3) Volts	0 to 4.5 VDC	1 sec.	100 sec.	36	400 sec.	1 in 4	1.125"
3F3	63	Power Inverter Data Encoder (4A7) Volts	0 to 4.5 VDC	1 sec.	100 sec.	36	400 sec.	1 in 4	1.125"
3F4	64	Power Converter Command (4A5) Volts	0 to 4.5 VDC	1 sec.	100 sec.	36	400 sec.	1 in 4	1.125"
3F5	65	Power Inverter Scientific (4A8) Volts	0 to 4.5 VDC	1 sec.	100 sec.	36	400 sec.	1 in 4	1.125"
3F6	66	Telemetering Mode Indication	Modes 1, 2, & 3	1 sec.	100 sec.	36	400 sec.	1 in 4	1.125"
3F7	67	Power System Current	0 to 10 amperes	1 sec.	100 sec.	36	400 sec.	1 in 4	1.125"
3F8	68	Nitrogen Tank Pressure	0 to 3500 psia	1 sec.	100 sec.	36	400 sec.	1 in 4	1.125"
3F9	69	Calibration Mid	730 cps	1 sec.	100 sec.	36	400 sec.	1 in 4	1.125"
2G0	70	+X Panel (4A9) Front Temperature	+45°F to +145°F	1 sec.	100 sec.	36	400 sec.	1 in 4	1.125"

Table 3.3.2.2-5 (Cont'd)
(See pages 12 thru 16)

Channel	Decom. Address	Measurement	Range	Commutator Sample Length	Commutator Sample Period	Measurements per Hour	Digital Printout Period	Ratio of Printouts	Record Length per Hour
2G1	71	+X Panel (4A9) Back Temp.	+45°F to +145°F	1 sec.	100 sec.	36	400 sec.	1 in 4	1.125"
2G2	72	-X Panel (4A10) Front Temperature	+45°F to +145°F	1 sec.	100 sec.	36	400 sec.	1 in 4	1.125"
2G3	73	-X Panel (4A10) Back Temp.	+45°F to +145°F	1 sec.	100 sec.	36	400 sec.	1 in 4	1.125"
2G4	74	Gyro Package Temp.	0°C to 70°C	1 sec.	100 sec.	36	400 sec.	1 in 4	1.125"
2G5	75	Nitrogen Tank Temp.	-25°F to +165°F	1 sec.	100 sec.	36	400 sec.	1 in 4	1.125"
2G6	76	Temp. Control Temp.	-25°F to +165°F	1 sec.	100 sec.	36	400 sec.	1 in 4	1.125"
2G7	77	Calibration Mid	560 cps	1 sec.	100 sec.	36	400 sec.	1 in 4	1.125"
2G8	78	Solar Panel Extension	Event	1 sec.	100 sec.	36	400 sec.	1 in 4	1.125"
2G9	79	Gamma Ray Boom Extension	Event	1 sec.	100 sec.	36	400 sec.	1 in 4	1.125"
4J0	80	Earth Sensor Temp.	±100°F	10 sec.	1000 sec.	3.6	1000 sec.	1	0.5"
4J1	81	+Y Pitch (7A13) Sun Sensor Temperature	+14°F to +140°F	10 sec.	1000 sec.	3.6	1000 sec.	1	0.5"
4J2	82	-Y Pitch (7A11) Sun Sensor Temperature	+14°F to +140°F	10 sec.	1000 sec.	3.6	1000 sec.	1	0.5"
4J3	83	Transponder Temp.	+14°F to +158°F	10 sec.	1000 sec.	3.6	1000 sec.	1	0.5"
4J4	84	Battery Temperature	+32°F to +158°F	10 sec.	1000 sec.	3.6	1000 sec.	1	0.5"
4J5	85	Helium Tank Temp.	-25°F to +165°F	10 sec.	1000 sec.	3.6	1000 sec.	1	0.5"
4J6	86	Power Switching & Logic Temperature	0°F to 200°F	10 sec.	1000 sec.	3.6	1000 sec.	1	0.5"
4J7	87	Gamma Ray Experiment Temperature	+32°F to +104°F	10 sec.	1000 sec.	3.6	1000 sec.	1	0.5"
4J8	88	Calibration High	997.5 cps	10 sec.	1000 sec.	3.6	1000 sec.	1	0.5"
4J9	89	Differential (7A10 minus 7A12) Sun Sensor Temp.	±36°F In -31°F to +95°F	10 sec.	1000 sec.	3.6	1000 sec.	1	0.5"

Table 3.3.2.2-5 (Cont'd)
(See pages 12 thru 16)

Channel	Decom. Address	Measurement	Range	Commutator Sample Length	Commutator Sample Period	Measurements per Hour	Digital Printout Period	Ratio of Printouts	Record Length per Hour
4H0	90	Power Boost Reg. (4A2) Temperature	0°F to 200°F	10 sec.	1000 sec.	3.6	1000 sec.	1	0.5"
4H1	91	Power Converter A/C (4A3) Temp.	0°F to 200°F	10 sec.	1000 sec.	3.6	1000 sec.	1	0.5"
4H2	92	+Y Yaw Jet Vane Temp.	0°F to +500°F	10 sec.	1000 sec.	3.6	1000 sec.	1	0.5"
4H3	93	Receiver Mixer Current	-3 to +3 dbm	10 sec.	1000 sec.	3.6	1000 sec.	1	0.5"
4H4	94	Power 400 cps 1 Phase Inverter (4A13) Volts	0 to +4.5 VDC	10 sec.	1000 sec.	3.6	1000 sec.	1	0.5"
4H5	95	Power 400 cps 3 Phase Inverter (4A14) Volts	0 to 4.5 VDC	10 sec.	1000 sec.	3.6	1000 sec.	1	0.5"
4H6	96	Solar Cell Short Circuit Amperes	0 to 0.2 Amps.	10 sec.	1000 sec.	3.6	1000 sec.	1	0.5"
4H7	97	Solar Cell Open Circuit Voltage	0 to 0.25 VDC	10 sec.	1000 sec.	3.6	1000 sec.	1	0.5"
4H8	98	Helium Tank Pressure	0 to 3600 psia	10 sec.	1000 sec.	3.6	1000 sec.	1	0.5"
4H9	99	Fuel Tank Pressure	0 to 460 psia	10 sec.	1000 sec.	3.6	1000 sec.	1	0.5"
1	--	400 cps	400 ±1 cps	--	--	Cont.	--	--	--
B-2-1	--	CC&S Program	Event	--	--	Cont.	--	--	--
B-2-2	--	Squib Fire Tele.	Event	--	--	Cont.	--	--	--
B-2-3	--	Omniantenna Extension	Event	--	--	Cont.	--	--	--
B-2-4	--	Radio Altimeter Extension	Event	--	--	Cont.	--	--	--
B-2-4	--	Capsule Separation	Event	--	--	Cont.	--	--	--
B-19	--	Commutator Sync.	Level	--	--	Cont.	--	--	--
* B-20	--	Midcourse Velocity Increment	0 to 204.7°/sec (12 bits)	--	--	330 words	--	--	--

* Mode II Measurement only.

Table 3.3.2.2-5 (Cont'd)
(See pages 12 thru 16)

Channel	Decom. Address	Measurement	Range	Commutator Sample Length	Commutator Sample Period	Measurements per Hour	Digital Printout Period	Ratio of Printouts	Record Length per Hour
B-20	--	Command System Output	17 Bits	--	--	Cont.	--	--	--
8	--	Gamma Ray Intensity	25 Bits/sec. 512 Bits/word	--	--	5.5 words	--	--	--
* 8	--	Midcourse Acceleration	0 to 2.4'/sec.^{2}	--	--	Cont.	--	--	--
** V		Gamma Ray Intensity	200 Bits/sec. 512 Bits/word	--	--	1 Word per 52 sec.	--	--	--
** V		Vidicon Output	0 to 2 kc	--	--	1 Frame per 13 sec.	--	--	--
** V		Altimeter Echo Strength	±2.5V	--	--	1 Meas. per 13 sec.			

* Mode II Measurement only.

** Mode IV Measurement only.

Table 3.3.2.2-5 (Cont'd)
(See pages 12 thru 16)

b. For the Yaw Rate Gyro measurement No. 2C4 (1 second sample, 10 second period) the chart would be 36" long; the total number of digital lines printed: 255; the ratio of measurement samples reported digitally: 1 in 16. See figure 3.3.2.2-2.

c. For the Receiver AGC measurement No. 4E3 (10 second sample, 100 second period) the chart would be 11 1/4" long; the total number of digital lines printed: 90; the ratio of measurement samples reported digitally: 1 in 4. See figure 3.3.2.2-3.

d. For the Transponder Temperature measurement No. 4J3 (10 second sample, 1000 second period) the chart would be 5" long; the total number of digital lines printed: 36, which is the total number of measurement samples supplied by the commutator. See figure 3.3.2.2-4.

3.3.2.4 Gamma Ray Measurement

Special DRL records shall be made for the Gamma Ray measurement (Channels 8 & V). The subcarrier frequency count shall be digitally recorded on magnetic tape, and used for computer entry. A calibrated analog chart of the measurement shall be provided for "quick look" and granular analysis.

3.3.2.5 Radio Altimeter Measurement

Special DRL records shall be made for the Radio Altimeter (Channel V). This record shall be a calibrated analog oscillographic chart prepared for Scientific Measurement Group analysis.

3.3.2.6 Video Data

The video data shall be digitized and fed to the 7090 computer format converter.

3.3.2.7 Composite Analog Oscillograph Recordings

Two types of analog oscillograph recordings shall be made. The first type shall be the raw composite analog out of the discriminators. This recording shall be useful for granular analysis and event detection. Event detection shall be accomplished by monitoring the recording of the analog output of Channel B-2 discriminator. In addition to the analog recordings, the standard NASA time code shall be recorded. The second type of composite recording shall be a digital-to-analog recording of each measurement. This recording will be useful to obtain a "quick look" evaluation of various measurement correlations.

3.3.2.8 Lunar Capsule Seismometer Measurement

Special DRL records shall be made for the lunar capsule measurements. The subcarrier frequency shall be recorded on two magnetic

recorders. One tape shall go to CIT and the other shall go to LGO. In addition, the analog output of the discriminator shall be expanded by the ADF expander, converted to digital information, recorded on a digital tape recorder for computer entry.

3.3.2.9 Record Handling

Data Reduction Lab record production will be regulated by the receipt of field recordings. Due to the differences in required transportation time from the DSIF sites, the "quick look" records will not be distributed in chronological order. The daily DRL output shall be labeled and distributed with minimum on-Lab delay. This output will consist of:

a. "Quick look" records circulated as ozalid reproductions.

b. Digital magnetic tapes for computer entry and/or scientific group processing.

c. Individual special processing requested by users.

As the data is accumulated, a complete chronological record of each engineering measurement channel shall be photographed on microfilm for a permanent historical file. This record shall be edited from the "quick look" records.

3.3.3 Launch Checkout Telemetry Trailer (See figure 3.3.3-1)

The telemetry trailer shall contain a typical telemetry ground system. The trailer shall be portable, road and air transportable, and its housing shall provide a suitable operating environment for operating personnel.

3.4 Equipment Requirements

3.4.1 Data Display Console

The telemetering data laboratory system shall have a permanently mounted Data Display Console for real time evaluation of various system tests. The console shall conform to JPL Specification 30512.

The data display consoles shall be capable of presenting the following outputs from a composite telemetering signal input during ground and flight tests:

a. A limited visual display of subcarrier frequency counts.
b. Analog DC signals for oscillographic recording of all spacecraft signals from the discriminators.
c. Digital printout of all commutated data (subcarrier frequency.

See figure 3.4.1-1 for a flow diagram of the complete data display console.

3.4.1.1 Completeness of Data Display Consoles

The desired degree of presentation shall determine the completeness of equipment for any particular display console.

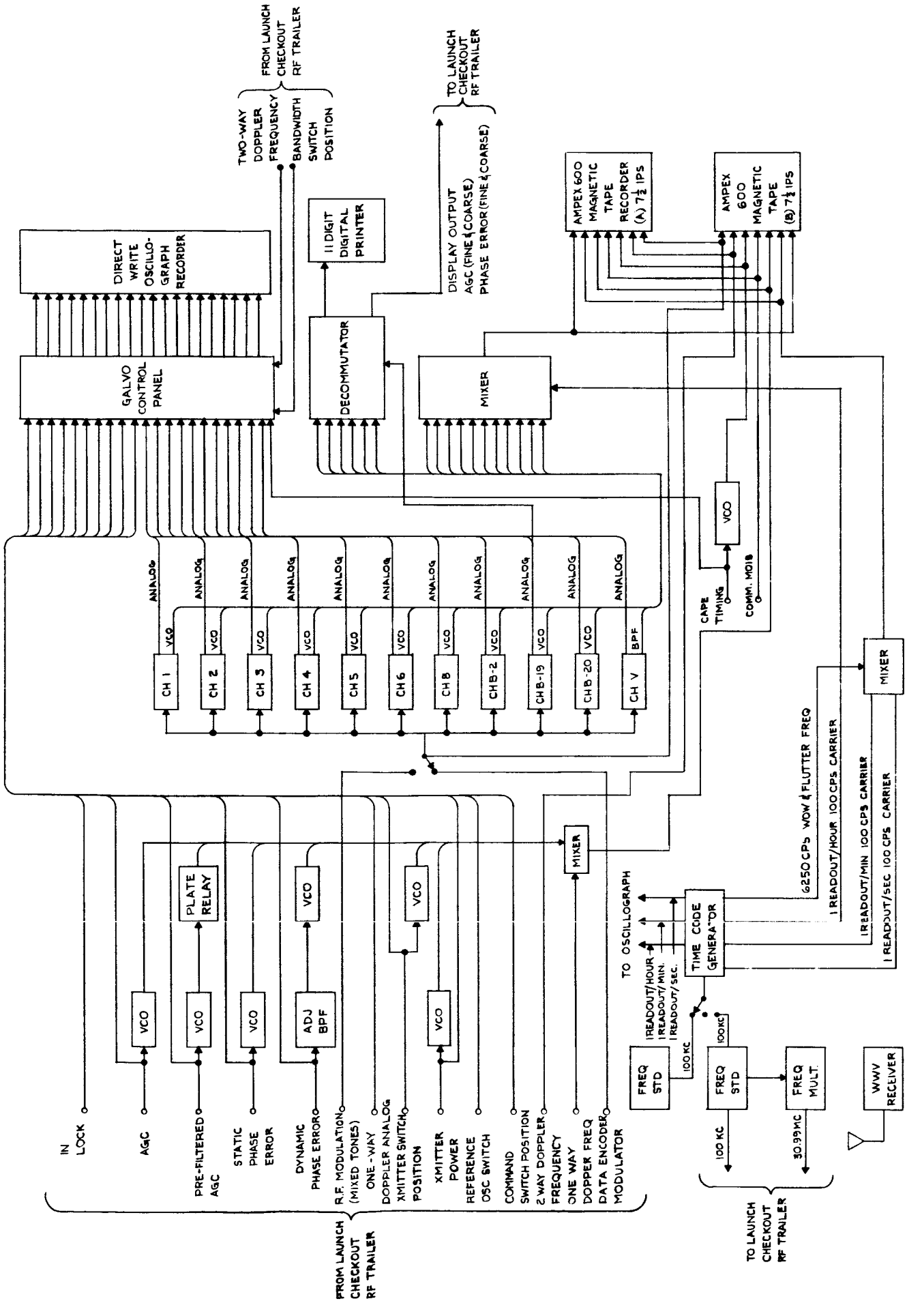

LAUNCH CHECKOUT TELEMETRY TRAILER SIGNAL FLOW DIAGRAM

FIGURE 3.3.3-1

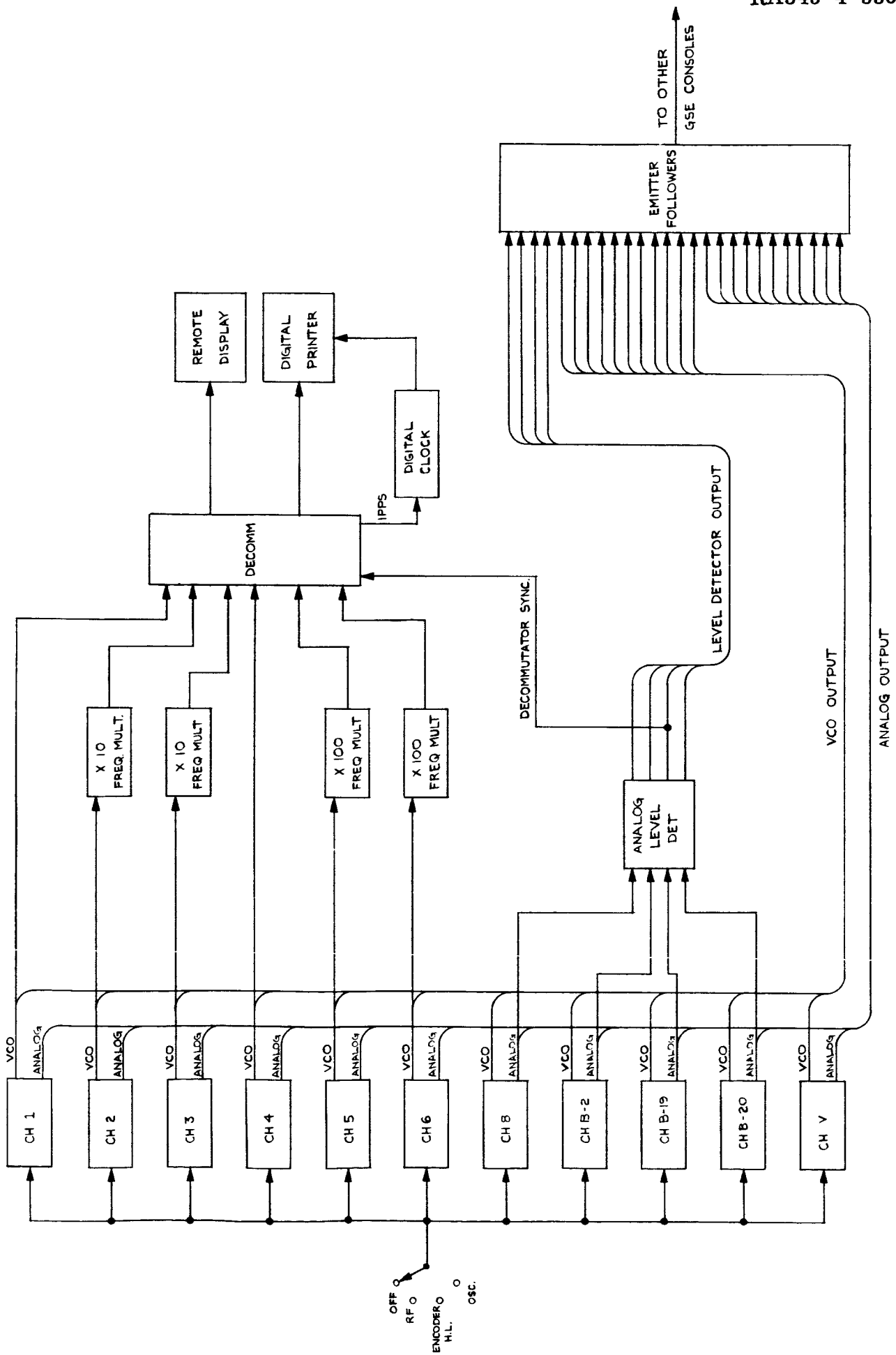

DATA DISPLAY CONSOLE FLOW DIAGRAM

FIGURE 3.4.1-1

The data display consoles at each of the following locations shall have the degree of completeness indicated below and in table 3.2-I.

a.	SAF (Spacecraft Assembly Facilities) . .	Complete System
b.	ETL (Environmental Test Laboratory) .	No Remote Display
c.	DRL (Data Reduction Laboratory). . . .	No Emitter Followers
d.	AMR Hangar	Complete System
e.	AMR Blockhouse	No Remote Display 1 B-19 Analog Level Detector
f.	Launch Checkout Telemetry Trailer . .	No Remote Display 1 B-19 Analog Level Detector No Emitter Followers

3.4.2 Oscillograph Charts

Oscillograph charts of all analog measurements shall be produced, and they shall have the following characteristics:

a. Chart speeds shall span a range of from 0.05"/sec to 140"/sec.

b. Reading error shall not exceed 2% of input signal when calibrated by signal substitution method.

c. Timing accuracy shall be ±1 ms, or limit of chart reading visual resolution.

3.4.3 Tabular Record Production

3.4.3.1 Mechanical Printer

Tabular records shall be produced to permit evaluation of time shared data where the sample rate is low; i.e., 10 seconds or more between samples. Also, the system shall be capable of subcarrier frequency printout for real time test evaluation or direct printout of function units for data reduction purposes. Characteristics shall be as follows:

a. Error shall not exceed ±1 count of the least significant digit.

b. Lines shall contain 11 characters.

c. Maximum print shall be 4 lines per second.

3.4.3.2 High Speed Digital Photo Printer

Tabular records shall be produced to permit evaluation of time shared data where the sample rate is high; i.e., 1 second or less between samples. Also, the system shall be capable of subcarrier frequency printout for real time test evaluation or direct printout of function units for data reduction purposes. Characteristics shall be as follows:

a. Error shall not exceed ±1 count of the least significant digit.

b. Word blocks shall contain 8 characters left to right as follows:

   1. Mode; one (1) character
   2. Address; two (2) characters
   3. Subcarrier data; four (4) characters
   4. DCI; one (1) character

c. Time shall be printed out once per second in an eight character word block left to right as follows:

   1. Blank; three (3) characters
   2. Hours; one (1) character
   3. Minutes; two (2) characters
   4. Seconds; two (2) characters

d. Maximum print shall not exceed fifty-five (55) word blocks per second.

3.4.4 Magnetic Recordings

The recording system shall produce magnetic tape recordings of all systems and pertinent subsystems tests. Tape recordings shall have the following characteristics:

a. Wow and flutter modulation shall not exceed 0.2% peak-to-peak, cumulative, from dc to 10 kc.

b. Total system distortion shall not exceed 1%.

c. The frequency response shall be ±3 db from 100 cps to 15 kc at 7.5 inches per second recording speed.

d. The dynamic recording range shall exceed 25 db.

3.4.5 Decommutator

The decommutator shall be designed to accept input data in the form of frequencies and associated synchronizing signals and to translate this data into a digital format suitable for visual display and/or printout. The decommutator shall be used only for engineering measurements. A simplified flow diagram is shown in figure 3.4.5-1. The decommutator shall have the following front panel indications:

a. Measurement address (2 digits).

b. Loss of synchronization for each commutator frame.

c. Remote lighted display of three digits of subcarrier frequencies for up to 12 selected measurements (see table 3.4.1.1-I for locations with this requirement).

d. Data condition indication indicating the lock condition of the discriminators used for engineering measurements and synchronization information.

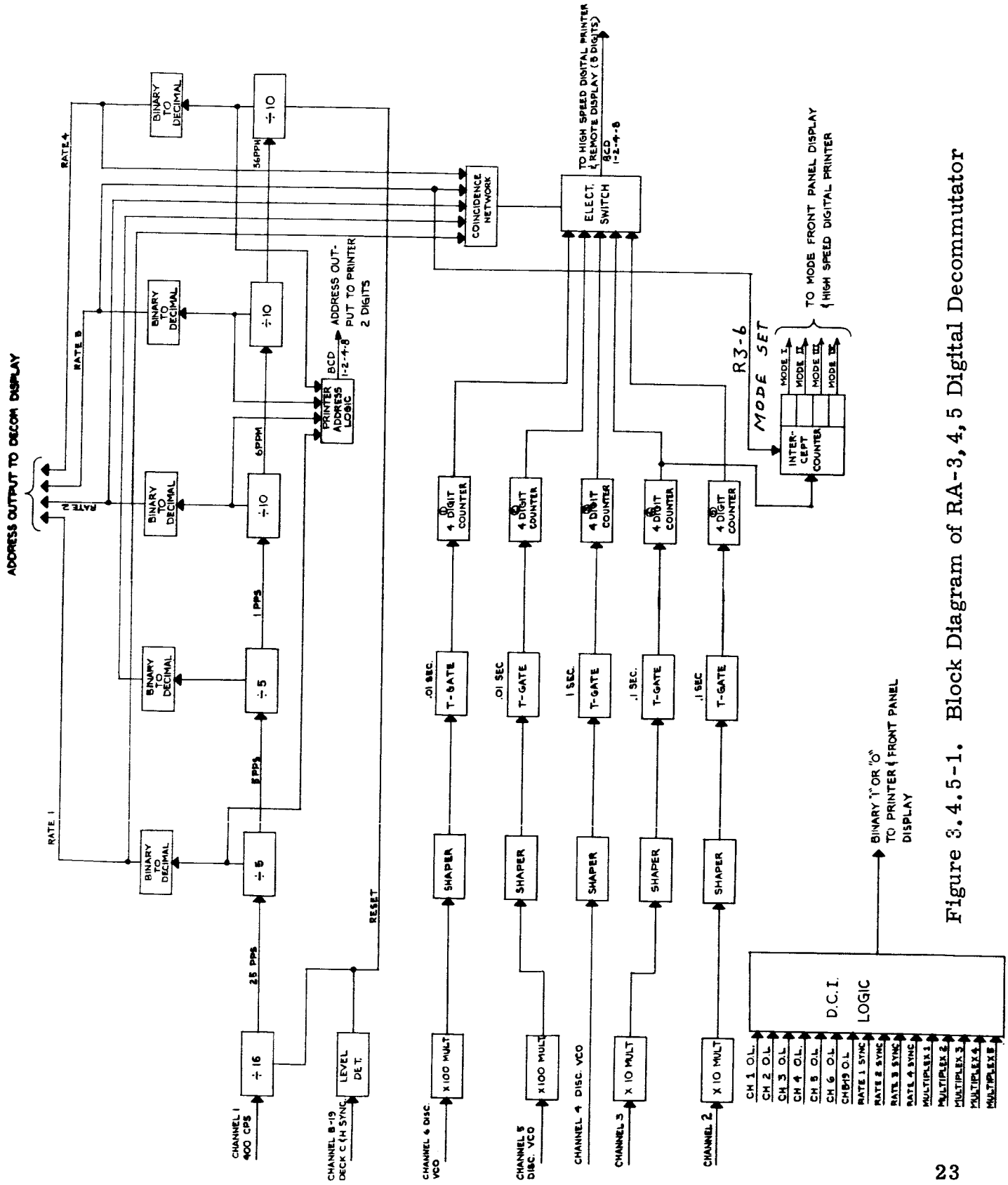

Figure 3.4.5-1. Block Diagram of RA-3, 4, 5 Digital Decommutator

e. Mode change indication.

3.5 Subsystem Operating Requirements

3.5.1 Subcarrier Frequency Count Conversion

Numerical readout for tabular data, visual display or conversion to computer input shall be made directly from subcarrier frequency count. A "Frequency to Engineering Unit Converter" shall produce direct measurement functions. The design for this converter shall conform to the requirements of JPL Specification 30542.

3.5.2 Computer Data

Telemetering data shall be processed and prepared into a suitable format for entry into the 7090 computer format converter.

3.5.3 Data Handling Rate

The data handling rate shall meet all requirements in JPL Specification 30539 B.

3.5.4 Accuracy

3.5.4.1 Subcarrier Accuracy

The subcarrier frequencies shall be displayed to an accuracy of plus or minus one count of the least significant digit.

3.5.4.2 Discriminator Accuracy

The analog output of the discriminators used in this unit shall be held within these accuracies:

a. Drift shall be no greater than ±0.5% of full IRIG bandwidth.

b. Linearity shall be held within ±0.3% (average deviation from the best straight line in percent of full bandwidth). See figure 3.5.4.2-1.

3.5.5 Timing

The timing system shall conform to JPL Specification 6048.

a. Accuracy shall be within ±11 ms.

b. Resolution shall be within ±1 ms.

Channel Data	fc cps	BW cps	Type of Data	Data Rate	fo cps	2 BLO cps	S/N 2 BLO(db)	Out	Tol.
1	400	30	E	Cont.	0.3	2.0	+9.0		
2	560	84	E	1 SPS	7.5	50	+5.6		
3	730	110	E	1 SPS	7.5	50	+5.6		
4	960	144	E	1 SPS	2.25	15	+5.6		
5	1300	196	E	25 SPS	100	196	+5.6		
6	1700	196	E	25SPS	100	196	+5.6		
8	3000	450	E&S	25 BPS	15	100	+5.6		
B-2	350	20	E&S	1 BPS	1.0	6.7	+5.6		
B-19	2100	100	Sync	1 BPS	4.0	26.3	+9.0		
B-20	2300	100	E	2.5 BPS	2.5	16.7	+5.6		
V	3600	2800	S	Cont.	- -	4.6	+18.7	27.0	+0.0 -0.5 db
Capsule Data CH 2	560	84	S	Cont.	10	66.7	+5.6		

Figure 3.5.4.2-1. Discriminator Parameters

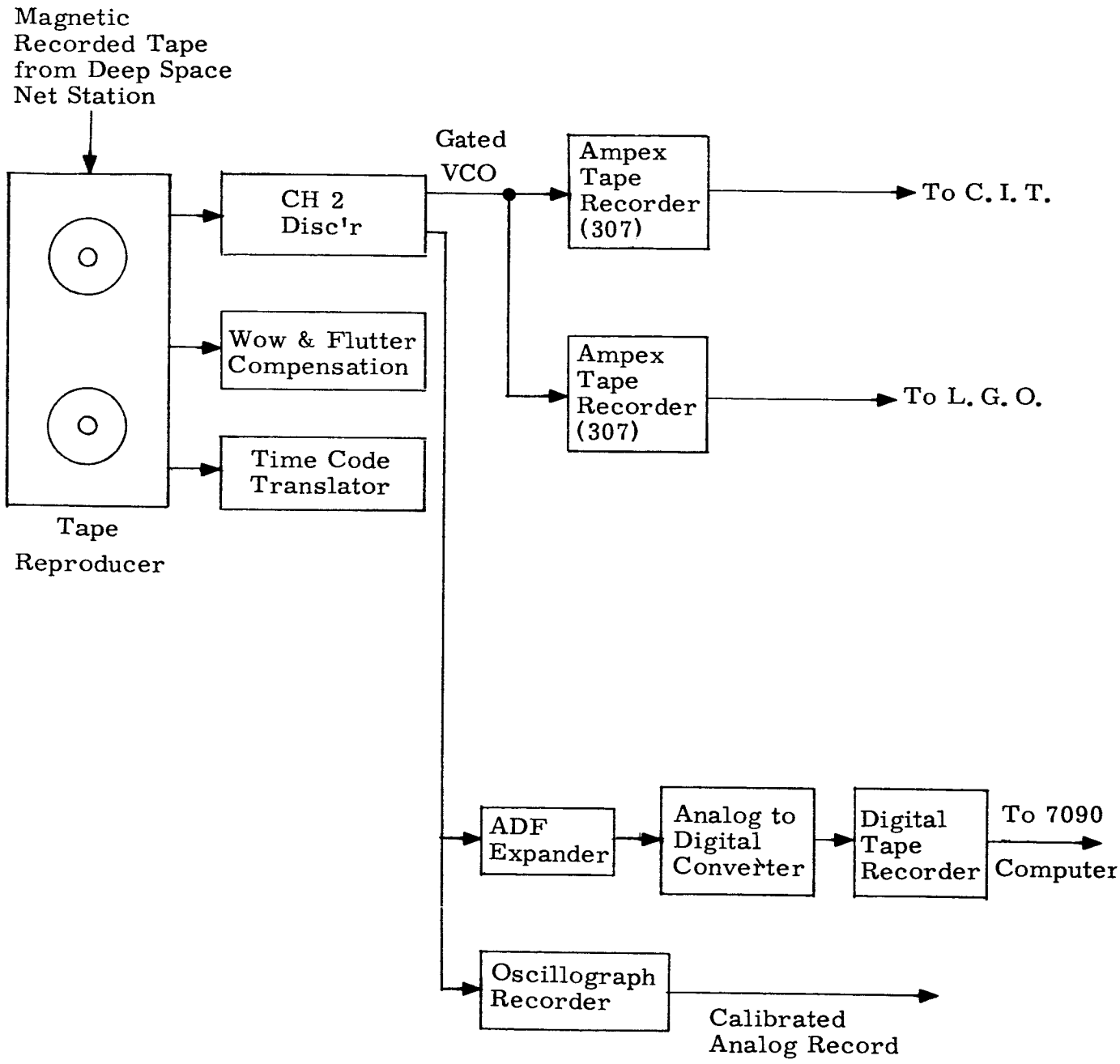

Figure 3. 3. 2. 8-1 Lunar Capsule Data Processing Station

4.0 NOTES

4.1 The following publications shall be used for reference as part of this specification:

SPECIFICATIONS

Jet Propulsion Laboratory

6048	Time Code Generator and Digital Clock, DSIF Ground Equipment
30512	Data Display System, Ground Equipment
30532	Photo Printing Oscillograph, Telemetry
30540	Digital Converter System
30542	Frequency Count to Engineering Unit Converter

(Insert in Spacecraft Design Specification Book)

APPROVED:

System: M. R. Mesnard

Subsystem: A. R. Lowe

Subsystem: [illegible]

JET PROPULSION LABORATORY

Spec. No. RA345-4-331

29 January 1962

FUNCTIONAL SPECIFICATION
RANGER RA3 THRU RA5 SPACECRAFT
GROUND COMMAND SUBSYSTEM (RWV)

1.0 SCOPE

1.1 This specification covers the functional requirements for the Ranger RA3, RA4 and RA5, Ground Command Subsystem (Read-Write-Verify), including the functions required at designated deep space stations of the DSIF to accept commands from the ground communications subsystem of the DSIF and encode them for radio transmission to the spacecraft.

1.2 This specification does not cover any associated radio transmitter, modulating amplifier, or on-board spacecraft radio receivers, demodulators or decoders.

1.3 The subsystem reads the incoming information, verifies through redundancy that the information is correct, transforms the data into a form suitable for transmission, reads the transmitted signal and verifies its correctness or incorrectness, and writes by means of punched paper tape, the transmitted command.

2.0 APPLICABLE DOCUMENTS

2.1 The following documents form a part of this specification:

SPECIFICATIONS

Jet Propulsion Laboratory

30235	Design Specification, RA345, Command Functional Unit, Pseudo - Noise Code and Subcarrier Frequencies (Classified)
	Ranger 345 Spacecraft Design Specification Book

DRAWINGS

Jet Propulsion Laboratory

B-105651	Overall Block and Signal Flow Diagrams, RWV, RA345 (27 sheets)
A-105670	Data Scanner, Model 1155, Modification
B-3158178	Diagram, Schematic, Wiring, Binary Scaler, Ranger 345
B-3158181	Diagram, Schematic, Wiring, Set-Reset Flip-Flop Ranger 345
J-3158258	Diagram, Schematic, Wiring, Digital Command Detector, (3A1) Ranger 345.

Applied Development Corporation

3-207-000	FSK Command Modulator, Logic Diagram
3-207-008	Power Supply, FSK Command Modulator
1-401-099	One Shot
1-606A-199	Amplifier and Driver
1-1011-000	Ripple Counter
1-3038-61	Schematic, Dual Amplifier
1-5011-009	BCD Counter, Model 5
1-6010-619	FSK Command Modulator and Amplifier Card
1-7021-61	FSK Command Modulator, Special No. 1

INSTRUCTION MANUALS

a. Read-Write-Verify System - Model 1132 - Ransom Research, Inc.

b. Data Scanner - Model 1155 - Ransom Research, Inc.

c. Tape Reader - Model 424 - Tally Register Corp.

d. Tape Punch - Model 420 - Tally Register Corp.

e. Telemetry Check-out Receiver - Leach Corp.

f. Oscilloscope - Model 321 - Tektronix, Inc.

g. Audio Oscillator - Model 9092 - Burr-Brown

h. Power Supply - Model 721A - Hewlett-Packard

i Time Code Generator - Model 6190 - Epsco-West Co.

3.0 DESCRIPTION

3.1 General

3.1.1 Block Diagram

A block diagram of the subsystem is shown in figure 3.1.1-1.

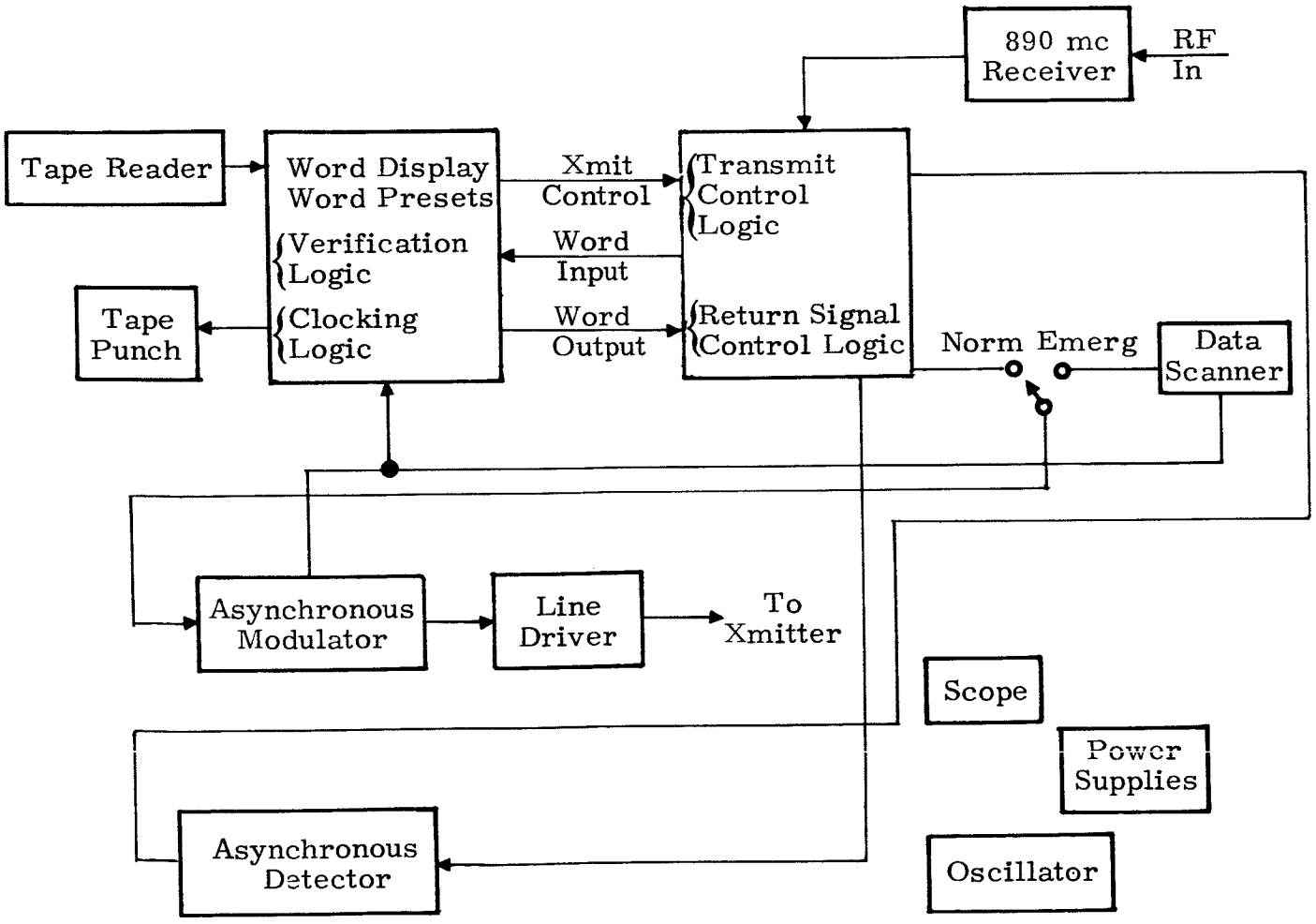

Figure 3.1.1-1

3.1.2 Required Functions

a. Verification of Incoming Command Data

Verification of an incoming command shall be accomplished by accepting a paper tape which has three identical command words punched on it, making an electronic comparison and a digital display, and indicating the existence or non-existence of an error. In the event of an error, a request can be made by the operator for a retransmission.

b. Verification of Ground Encoding Electronics

A sample or test word is inserted in the system, and information bits are clocked out to the asynchronous modulator. This signal is directly demodulated, and electronically compared with the inserted word. In the event of a disagreement, an error indication shall be made.

c. Transmission to Transmitter Modulator

When it is desired to actually transmit command data, a gate shall be closed to the transmitter modulator, and information bits clocked to it. The process described in b. above shall be repeated automatically for each command word. In case an error occurs, the transmission shall be automatically inhibited.

d. Verification of Transmitted Signal

A probe shall sample energy from the transmitting antenna, and a receiver detects the signal. The receiver output shall be demodulated and compared with the word as stored. Should there have been an error, transmission shall be inhibited.

e. Record of Transmitted Command

The signal as received from the antenna probe is punched (written) on paper tape in the same form as the original command word (for record purposes).

3.2 Operational

3.2.1 Modes of Operation

a. Test Mode - Built-in test words of all ones and all zeros are provided.

b. Mode 1 - In this mode, the RWV subsystem compares three identical words as received from the teletype line termination. The capability is also present to prepare a punched tape for future use.

c. Mode 2 - In this mode, verification of the asynchronous modulator operation is made. A submode (transmit) allows transferral of the command data to the transmitter modulator.

d. Emergency Operation - A self contained (including power supply) unit (the Data Scanner) receives manually set-in data by means of rotary switches, and will do no more than clock out in serial form, the command bits to the asynchronous electronics.

3.2.2 Other Features

a. Indications and Controls - Indications of all modes and conditions of operation shall be made both locally and remotely, except that digital word displays and set-in information shall be only made locally. Remote controls include "Manual Initiate" and "Transmit Inhibit Override".

b. Automatic Initiate - When the system is fed time of day code from the time code generator, it shall be possible to start the transmission of a word or a series of words at any given time of day.

c. Between-word Delay - When a series of words are being sent, it shall be possible to vary the delay between words from 20 to 119 seconds, for a total of seven words.

d. Independent Check - An independent check of antenna radiated power shall be provided on the receiver signal strength meter.

e. Parity Check - Parity check bits shall be provided in the tape format.

3.2.2.1 Local Indications: Drawer 1

a. Power on - Indicator and Control

b. Manual Perforate - Indicator and Control

c. Transmit Inhibit Override - Indicator and Control

d. Error - Indicator and Control

e. Transmit Inhibit - Indicator and Control

f. Ground Synchronization Manual - Indicator

g. Ground Synchronization Override - Indicator and Control

h. Vehicle Synchronization On - Indicator

i. Ground Synchronization On - Indicator

j. Verify - Indicator

k. Transmit - Indicator and Control

l. Initiate - Control

m. System In Process - Indicator

n. Manual Initiate - Indicator and Control

o. Auto Initiate - Indicator and Control

p. Test 1. - Indicator and Control

q. Test 0. -Indicator and Control

r. Mode 1. - Indicator and Control

s. Mode 2. - Indicator and Control

3. 2. 2. 2 Remote Indication

a. Transmit Inhibit Over-ride - Indicator and Control

b. Error - Indicator

c. Transmit Inhibit - Indicator

d. Vehicle Synchronization On - Indicator

e. Ground Synchronization - Indicator

f. Verify - Indicator

g. Transmit - Indicator

h. Initiate - Control

i. System In Process - Indicator

j. Manual Initiate - Indicator

k. Auto Initiate - Indicator

3. 2. 2. 3 Local Inputs - Drawer 2

a. Manual Perforate - Address, date and polarity

b. Auto Initiate - Hour, minutes and seconds

c. Word Stop - Number of words in a string up to 7

d. Interword Time Delay - 1 to 99 seconds

3.2.2.4 Miscellaneous Inputs and Indications

Associated equipment controls (scope, oscillator receiver, punch
* "buzz switch", data scanner controls for emergency operation.)
Key lock (prevents any transmission unless turned "on").

3.3 Operating Sequence

3.3.1 In practice, three identical words are received via teletype line paper tape termination. This tape is hand carried to the RWV system (which has been previously turned on and self-checked and loaded on the tape reader. The system is in Mode 1, and the initiate button depressed. The three words are read, displayed, and compared electronically. In the event of an error, a request is made for retransmission from the originating station and the process repeated. This word is now read for transmission, and may be transmitted by reloading the tape, setting the word stop to 1, switching over to mode 2, turning "on" the key lock, and depressing the initiate button.

Had it been desired to send a series of words, the punch would have been operated once for each unique word, so that a tape would have been generated containing only serial unique words instead of three of a kind. The locally generated tape would have been loaded on the reader, a decision made as to the time delay desired, the "word stop" set for the total number of words, and the system initiated either manually or automatically. At the end of each transmission, a punched tape is automatically made of the word or words sent, as picked up by the antenna probe.

3.4 Digital Display

3.4.1 Three display lines are used in double purpose fashion. Lines A, B, and C as used in mode 1 display each of the three identical redundant words as read from the teletype tape. In mode 2, line A shows the word as read, line B, the word as checked through the asynchronous electronics, and line C as received from the transmitting antenna probe. To avoid having to display each bit of the command word, octal code is used. The table 3.4-1 shows the english language address designation, the address in binary, and the octal presentation. Examples of the decimal equivalent for the CC&S magnitude and octal presentation are also given.

4.0 BOUNDARIES AND PARAMETERS

4.1 Inputs to System

4.1.1 Auto-Initiate

Both the "true" and false outputs from the time code generator are required for the system to start automatically at a given time.

* Buzz switch provides extra leader length on the output tape.

4.1.2 Receiver Input

In order to write a tape corresponding to the word as actually transmitted a probe is mounted on the antenna, and rf energy fed back to the system.

4.1.3 Tape Input

Command word information is read in by means of punched paper tape.

4.1.4 Power

Power required is 105 to 125V ac, 55 to 65 cps.

4.2 Outputs from System

4.2.1 Command Word

The command word or words are fed to the transmitter modulator in binary form.

4.2.2 Tape Output

All transmitted words are automatically punched on paper tape for record keeping. Prepunched tapes may be made for future use.

4.3 Parameters

4.3.1 Command Rate

The command rate is one bit per second.

4.3.2 Word Format

See figure 4.3-1.

1 Bit Word Start	5 Bit Address	11 Bit Magnitude Information	1 Bit Polarity 1 = + 0 = -	Total 18 bits/word

Figure 4.3-1

5.0 CONSTRAINTS

5.1 Number of Commands

The maximum number of words which can be sent in a single operation with automatic word stop is 7. Any number of words may be sent if a manual stop is used.

5.2 Lead Time

When a single word is to be transmitted a lead time of 20 seconds is required in mode 2 for tape reading, display and automatic verification. Actual lead time is 19-2/3 seconds plus some random amount up to 59/60 second, an ambiguity introduced by the difference in phase between the clock rate of transmission and the line frequency used to operate the tape reader.

5.3 Interword Time Delay

When more than one word is to be sent in sequence, a time delay which is variable from one to 99 seconds is inserted, resulting in a total interword time delay of from 21 to 119 seconds.

5.4 Check-out Time

When the system is first turned on, a period of two minutes is required for self clearing of the interword time delay circuitry. An additional delay of approximately 3 minutes will be required for operational checks.

5.5 Auto-Initiate

The time of starting the RWV system is controlled to no closer than ± 1 millisecond of the time set in by the time code generator.

6.0 INTERFACE CHARACTERISTICS

6.1 Inputs to Systems

6.1.1 Auto Initiate

Voltage levels and impedances are compatible with the Epsco-West Model 6190, Time Code Generator.

6.1.2 Receiver Input

Antenna input impedance is 50 ohms. A signal level as low as -50 dbm is satisfactory.

6.1.3 Tape Input

See figure 6.1-1.

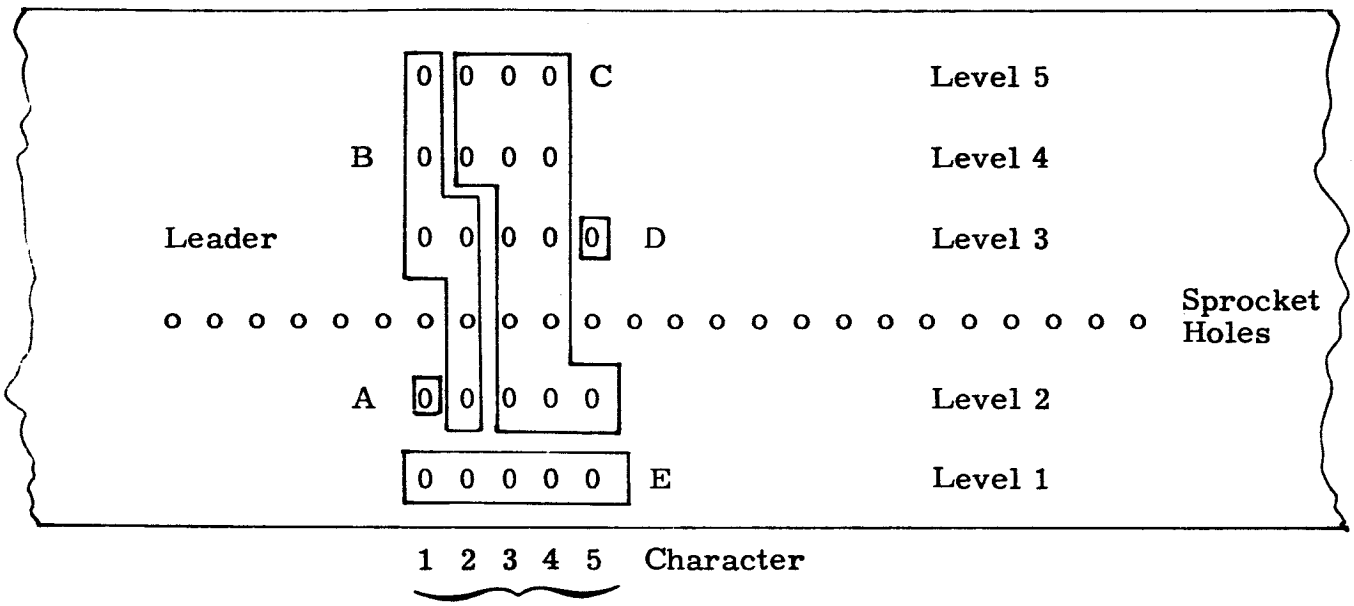

Figure 6.1-1

A	-	Start Bit	1 bit	
B	-	Address	5 bits	
C	-	Information	11 bits	
D	-	Polarity	1 bit	(binary 1 is plus; binary 0 is minus)
E	-	Parity	5 bits	

6.1.4 Power

Power required is no more than 400 watts at 117 volts 60 cycles per second. The voltage may vary from 105 to 125 volts and frequency from 55 to 65 cps.

Command Conversions - RA345

Table 3.4-1

RWV PRESENTATION ADDRESS	BINARY ADDRESS	ADDRESS
35	11101	SC-2 Midc. Man. Pitch Duration
33	11011	SC-6 Term. Man. 2nd Pitch Duration
32	11010	RTC-3 Ant. Switchover
26	10110	RTC-4 Midc. Man. Start
25	10101	SC-1, Midc. Man. Roll Duration
24	10100	RTC-2, Ant. Hinge Angle Override
23	10011	SC-4 Ter. Man. 1st Pitch Duration
22	10010	RTC-5, Telem. Mode Change
16	01110	RTC-7, Altimeter Power On
13	01011	SC-5, Term. Man. Yaw Duration
12	01010	RTC-1, Roll Override
5	00101	RTC-6, Term. Man. Start
3	00011	SC-3, Midc. Man. Velocity Increment
0	00000	RTC-0, Clear Command

MAGNITUDE	MAGNITUDE	DECIMAL MAGNITUDE
3777	11111111111	2047
3776	11111111110	2046
3774	11111111100	2045
3770	11111111000	2044
3760	11111110000	2043
3740	11111100000	2042
3700	11111000000	2041
3600	11110000000	2040
3400	11100000000	2039
3000	11000000000	2038
2001	10000000001	2037
0003	00000000011	2036
	Etc.	Etc.

6.2 Outputs from System

6.2.1 Command Word

The output voltage is variable from 0 to 2.5 volts peak. The output impedance is 20 ohms. Frequencies are classified. (See JPL Specification 30235).

6.2.2 Tape Output

The tape output is identical in format to the tape format required at the input. Parity bits are internally generated and punched. Successive words are automatically spaced by five character places.

(Insert in Spacecraft Design Specification Book) APPROVED:

System: M. R. Musnard

Subsystem: J F Koukol

Subsystem: R. P. Mathison

JET PROPULSION LABORATORY

Spec. No. RA 345-4-311
16 January 1962

SUPERSEDES:
RA 345-4-310 A
8 December 1961

FUNCTIONAL SPECIFICATION
RANGER RA-3, 4, AND 5 SPACECRAFT
TELECOMMUNICATION SYSTEM

---

1. SCOPE

1.1 This specification covers the functional requirements for the Ranger RA-3, 4, and 5 telecommunication system. It describes the functions of the ground and spacecraft subsystems which are required to perform commanding, telemetering, and tracking operations.

1.2 The detailed descriptions of the functional requirements, parameters, interface characteristics, and constraints of the specific telecommunication subsystems are covered in separate documents referenced herein.

2. APPLICABLE DOCUMENT

2.1 The following document forms a part of this specification:

SPECIFICATION

Jet Propulsion Laboratory

Spacecraft Design Specification Book,
Ranger RA-3, 4, and 5

3. DESCRIPTION

3.1 General

3.1.1 Functions

The Ranger RA-3, 4, and 5 telecommunication system shall be designed to perform the following functions:

a. Track the relative motion of the spacecraft with respect to designated coordinate systems to enable the Central Computing Facility to compute the parameters of the spacecraft trajectory as a function of time.

b. Telemeter certain engineering parameters and scientific phenomena from the spacecraft to herein designated ground locations.

c. Communicate commands from the designated command decision location to the recipient spacecraft subsystems.

d. Receive telemetry signals from the lunar capsule.

3.1.2 Subsystems

The telecommunication system shall be comprised of the following subsystems:

a. Spacecraft radio

b. Spacecraft telemetry

c. Spacecraft command

d. Ground telemetry

e. Ground command

f. Ground radio of the DSIF

g. Ground instrumentation of the DSIF

h. Ground communications of the DSIF

The functional relationship of these subsystems shall be as shown in figures 3.1.2-1 and 3.1.2-2.

3.2 Spacecraft Radio Subsystem

The spacecraft radio subsystem shall:

a. Coherently receive and demodulate a phase modulated, continuous wave, radio frequency signal from the ground using a single automatic phase control type of receiver.

b. Provide demodulated command signals to the spacecraft command subsystem.

c. Transmit a phase modulated, continuous wave, radio frequency signal to the ground the carrier of which is phase coherent with the unmodulated phase of the ground to spacecraft carrier.

d. Transmit a phase modulated, continuous wave, radio frequency signal to the ground the carrier frequency and phase of which is controlled by a quartz crystal when a ground to spacecraft signal is not being received by the spacecraft.

e. Phase modulate the transmitted signals with composite telemetry subcarriers that are generated by the spacecraft telemetry subsystem.

f. This subsystem shall consist of the following elements which shall function in accordance with the requirements of Functional Specification RA 345-4-320 Ranger RA-3, 4, and 5 Spacecraft Radio Subsystem.

1) Low-gain, quasi omnidirectional antenna
2) High-gain directional antenna
3) Transponder receiver
4) Transponder transmitter, 3.0 watts
5) Diplexing network
6) Antenna transfer network

3.3 Spacecraft Telemetry Subsystem

The spacecraft telemetry subsystem shall:

a. Transduce certain spacecraft engineering parameters into appropriate electrical signals.

b. Condition certain telemetry signals so as to match their characteristics to the telemetry encoding circuits.

c. Commutate the various engineering measurement signals.

d. Modulate the frequency of an appropriate number of audio frequency subcarriers with the commutator outputs.

e. Modulate the frequency of an appropriate number of audio frequency subcarriers with analog and binary signals from assigned scientific instruments.

f. Combine the frequency modulated subcarriers into an appropriate composite telemetry signal which shall phase modulate the RF carriers of the spacecraft to ground channels and the frequency of an Agena-booster telemetry channel.

The functions shall be performed in accordance with the requirements of Functional Specification RA 345-4-321, Ranger RA-3, 4, and 5 Spacecraft Telemetry Subsystem.

3.4 Spacecraft Command Subsystem

The spacecraft command subsystem shall:

a. Detect commands in the form of binary FSK modulation on an audio frequency subcarrier which is the output of the spacecraft radio subsystem demodulator.

b. Decode the digital commands, routing "real time" commands to recipient spacecraft subsystems, and "stored" (magnitude) commands to the CC&S for the midcourse and terminal maneuver.

3.4.1 Command Subsystem Elements

The spacecraft command subsystem shall consist of the following elements which shall function in accordance with the requirements of Functional Specification RA 345-4-322:

a. Command detector

b. Command decoder

3.4.2 Modes of Operation

There shall be two modes of operation, one for "real time" commands, and one for "stored" commands. Control of the modes shall be internal to the command decoder and wholly dependent on the command word received.

3.5 Ground Telemetry Subsystem

The ground telemetry subsystem shall perform the following:

a. Receive composite telemetry signals directly from the ground radio subsystem of the DSIF, from magnetic tapes recorded at the DSIF stations, or from magnetic tape recordings of spacecraft system tests.

b. Filter and separate the frequency modulated telemetry subcarriers.

c. Demodulate the subcarriers.

d. Decommutate the spacecraft engineering telemetry signals.

e. Reduce the telemetered data to appropriate digital and analog records as required by the data users.

These functions shall be performed in accordance with the requirements of Functional Specification RA 345-4-330 Ranger RA-3, 4, and 5 Ground Telemetry Subsystem. They shall also be performed in "quasi real time" at designated stations of the DSIF on specified telemetry channels for evaluation of the operational status of the spacecraft at the Central Computing Facility.

3.6 Ground Command Subsystem

The ground command subsystem shall perform the following functions in accordance with the requirements of Functional Specification RA 345-4-331:

a. Accept either "real time" or "stored" commands in the form of a punched paper tape or manual switch inputs.

b. Verify the accuracy of the taped commands.

c. Encode the commands into binary words.

d. Frequency shift modulate (FSK) an appropriate audio frequency subcarrier with the binary command words. This subcarrier will phase modulate the RF carrier of the earth to spacecraft channel.

e. Verify the radio transmission of correct commands.

3.7 Ground Radio Subsystem - DSIF

The ground radio subsystem of the DSIF shall perform the following functions:

a. Generate a stable radio frequency phase reference against which Doppler frequency shifts may be compared.

b. Transmit a phase modulated, continuous wave radio frequency signal to the spacecraft.

c. Coherently receive and demodulate a phase modulated, continuous wave, radio frequency signal from the spacecraft and lunar capsule using automatic phase control type receivers.

d. Compare the frequency and phase of the spacecraft-to-ground carrier with the frequency and phase of the local radio frequency reference to determine "one way" and "two way" Doppler frequency shifts.

e. Coherently demodulate radio frequency angle-of-arrival error signals in order to control the automatic positioning of high-gain, directional ground antennas.

f. Provide the demodulated composite telemetry signal to the ground telemetry subsystem.

g. Provide an appropriate Doppler signal to the ground instrumentation subsystem.

These functions shall be performed in accordance with the requirements of Functional Specification RA 345-4-322 Ranger RA-3, 4, and 5 Ground Radio Subsystem - DSIF.

3.8 Ground Instrumentation Subsystem - DSIF

The ground instrumentation subsystem of the DSIF shall perform the following functions:

a. Generate a central timing reference of known accuracy and stability at each station of the DSIF for the purpose of correlating all recorded data.

b. Encode the Doppler tracking data into a form suitable for real time display at each station and for transmission by the ground communication system to designated data collection centers.

c. Encode the measured angle-of-arrival data into a form suitable for real time display at each station and for transmission by the ground communication system to designated data collection centers.

d. Record specified DSIF station parameters on magnetic tape.

e. Record the composite telemetry signals on magnetic tape.

These functions shall be performed in accordance with Functional Specification RA 345-4-333 Ranger RA-3, 4, and 5 Ground Instrumentation Subsystem.

3.9 Ground Communication Subsystem - DSIF

The ground communication subsystem of the DSIF shall perform all intercommunication between stations of the DSIF and other designated operational facilities including:

a. Real time data transmission

b. Non-real time data transmission (i.e., tape records)

c. Voice communication

d. Command transmission

e. Acquisition data transmission

f. Administrative communication

These functions shall be performed in accordance with the requirements of Functional Specification RA 345-4-334 Ranger RA-3, 4, and 5 Ground Communication Subsystem - DSIF.

3.10 DSIF Operations

Operational considerations of the DSIF which effect the design and operation of the spacecraft are specified in Functional Specification RA 345-4-335 Ranger RA-3, 4, and 5 DSIF Operations.

4. PARAMETERS AND PERFORMANCE SUMMARY

4.1 Parameters

The values of the principle parameters that determine the over-all system performance shall be as stated in the following tables:

4.1-1 Spacecraft Radio Transmission

4.1-2	DSIF Radio Reception
4.1-3	DSIF Radio Transmission
4.1-4	Spacecraft Radio Reception
4.1-5	Telemetry
4.1-6	Command

4.2 Performance Summary

The over-all system performance shall be as indicated in the following figures:

a.	4.2-1 (a. through l.)	Spacecraft to Earth Channel MTS (Station 1)
b.	4.2-2	Earth to Spacecraft Channel MTS (Station 1)
c.	4.2-3 (a. through m.)	Spacecraft to Earth Channel Goldstone AZ-EL, Johannesburg (Station 3, 5)
d.	4.2-4 (a. through c.)	Earth to Spacecraft Channel Goldstone AZ-EL, Johannesburg (Station 3, 5)
e.	4.2-5 (a. through k.)	Spacecraft to Earth Channel Woomera (Station 4)
f.	4.2-6 (a. through m.)	Spacecraft to Earth Channel Goldstone Ha-Dec (Station 2)

4.2.1 Performance Definitions

The following definitions shall apply to the over-all performance curves.

4.2.1.1 Performance Margin

The performance margin is defined as the ratio of the nominal received signal level (carrier or modulation sidebands) to the nominal threshold signal level expressed in db. It shall be considered acceptable when it is equal to or greater than the linear sum of the adverse system tolerances.

4.2.1.2 Nominal Received Signal Level

The nominal received signal level is defined as the received signal level as calculated from the nominal system parameters (gains, loss, and power levels). The calculation excludes as far as possible all arbitrary margins, pads, or unknown factors.

4.2.1.3 Nominal Threshold Signal Level

The nominal threshold signal level shall be the received signal level required to achieve a specified threshold signal-to-noise ratio in the effective noise bandwidth of the detector or demodulator, given the system noise spectral density.

4.2.1.4 Threshold Signal-to-Noise Ratio

The threshold signal-to-noise power ratio shall be the signal-to-noise ratio required at the detector that will result in the minimum acceptable system performance.

5. NOTES

5.1 Notes pertaining to figures 4.2-1 through 4.2-6:

a. The spacecraft antenna gain quoted for the non-oriented mode is a value such that the actual antenna gain exceeds this value over 90 percent of the required spherical coverage.

b. The spacecraft gains used for these performance estimates were computed from patterns made from quarter-scale models. This document will be revised if the full scale patterns indicate appreciable errors. Preliminary estimates indicate that this is not the case.

c. The spacecraft antennas are linearly polarized.

d. A circularly polarized, simultaneous lobing, tracking feed is employed on the DSIF antennas at stations 1, 3, 4, and 5. A circularly polarized listening feed is employed at station 2.

e. A diplexer is employed at those stations where a transmitter is available. These calculations assumed that a transmitter would be available at Johannesburg for RA-3. As a result of re-scheduling, a transmitter will not be available at Johannesburg for RA-3 and, as a result, the performance margins will be slightly greater than is predicted by these calculations.

f. The plots of the sum of the negative tolerances have been rounded off to the nearest db.

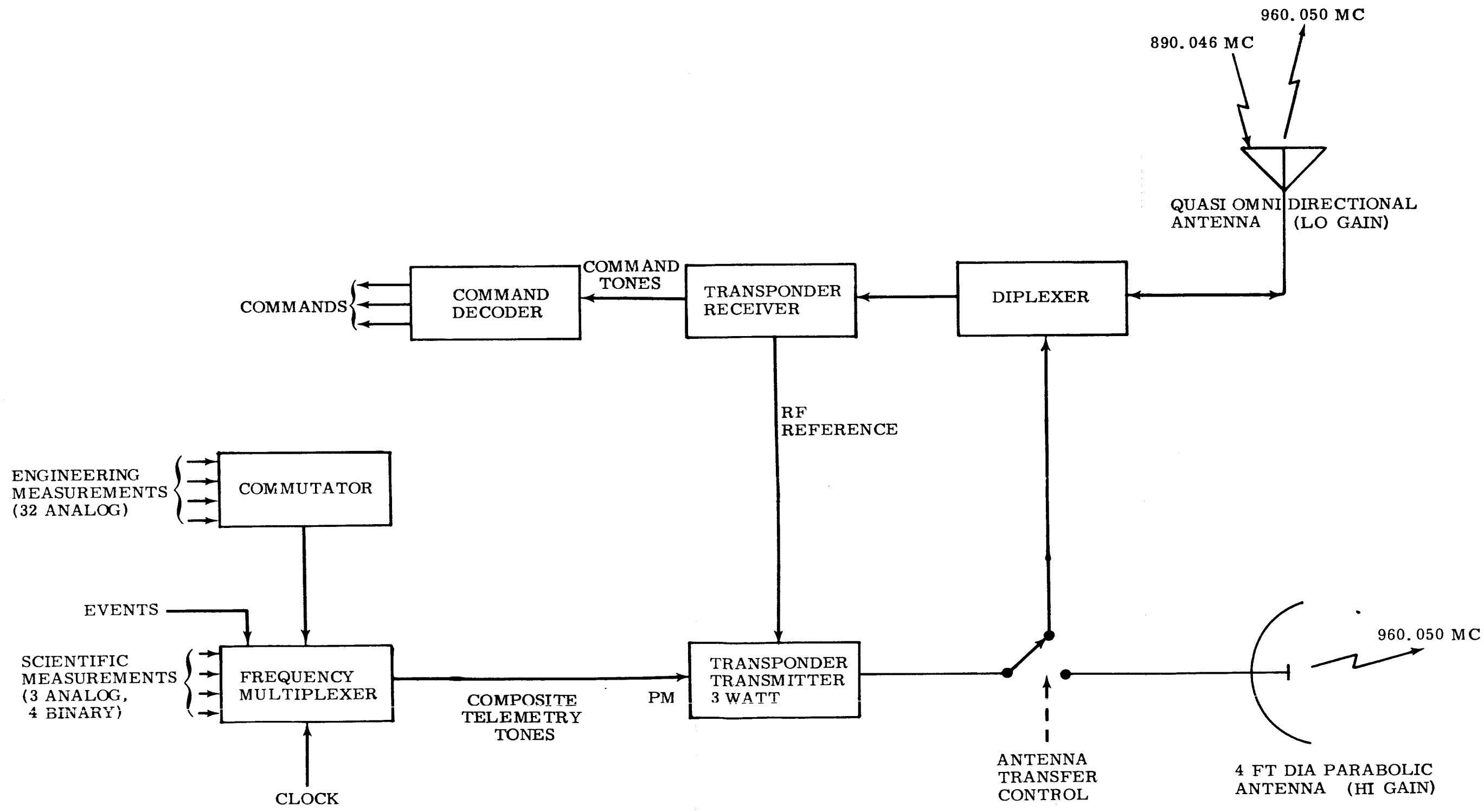

Figure 3-1. Ranger RA-3, 4, & 5 Telecommunication System (Part 1)

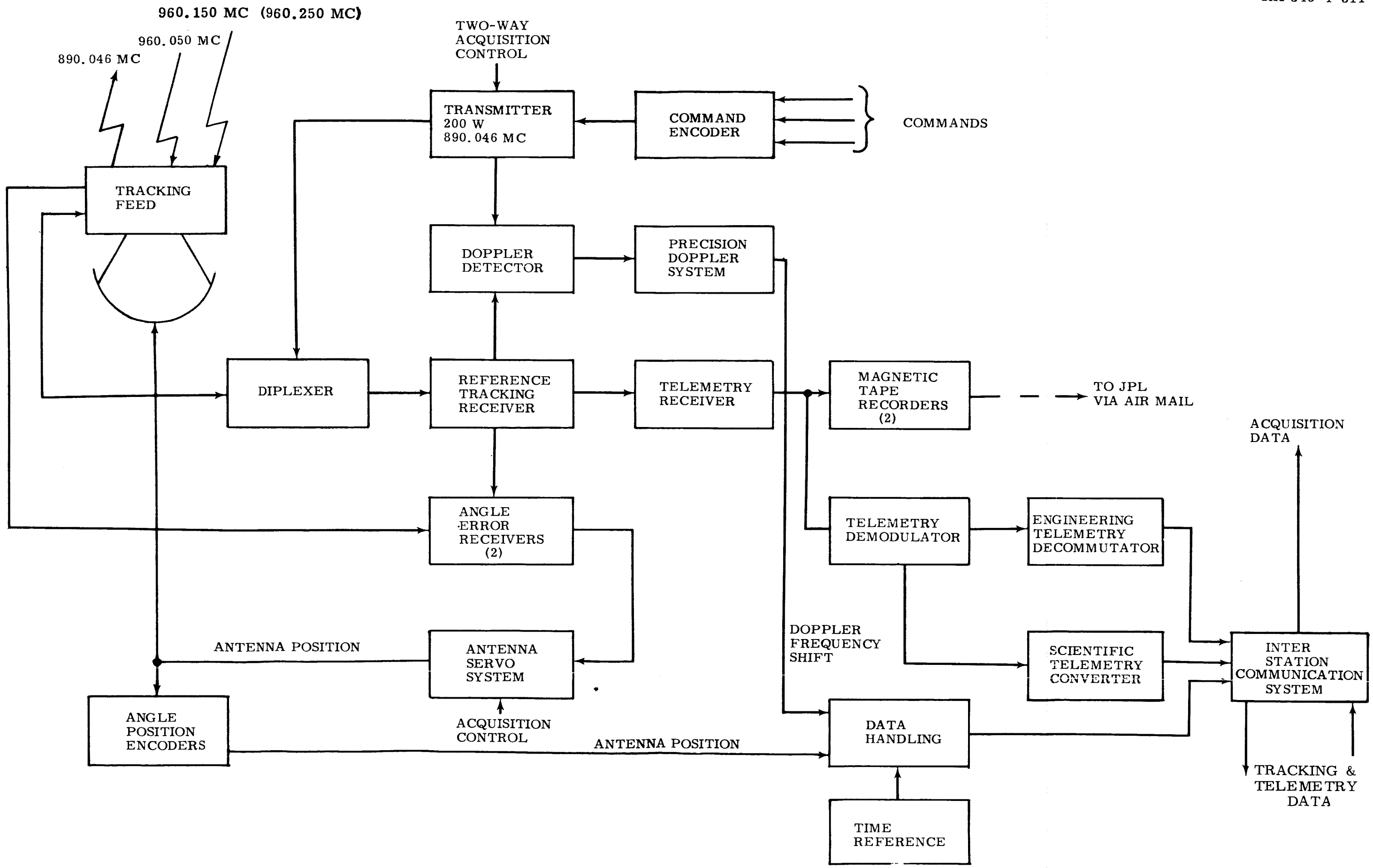

Figure 3-1. Ranger RA-3, 4, and 5 Typical Deep Space Station

Table 4.1-1

Spacecraft Radio Transmission Parameters
(960.050 MC)

Parameter	Low Gain Channel		High Gain Channel		Notes
	Value	Tolerance	Value	Tolerance	
1. Total transmitter power	+34.7 dbm[a]	±1.0 db	+34.7 dbm[a]	±1.0 db	a. +31.2 dbm ±1.0 db during preinjection low power mode
2. Carrier modulation loss	+3.7 db	+1.6, -2.8 db	+3.7 db	+1.6, -2.8 db	
3. Transmission circuit loss	+1.7 db	±0.2 db	+0.8 db	±0.3 db	
4. Spacecraft antenna gain (nominal)	-8.0 db[b]	±3.0 db	+19.0 db	±0.5 db	b. Non-oriented (90% coverage)
	-4.0 db[c]	±3.0 db	- -	- -	c. Injection +30 minutes to injection +110 minutes
	0.0 db[d]	±2.0 db	- -	- -	d. Injection +110 minutes to terminal maneuver

Table 4.1-2

DSIF Radio Reception Parameters
(960.050, 960.150, 960.250 MC)

Parameter	Goldstone (Az-El) Johannesburg Woomera		Goldstone (HA-Dec)		MTS	
	Value	Tolerance	Value	Tolerance	Value	Tolerance
1. Polarization loss	+3.0 db	+0.8, -0.7 db	+3.0 db	+0.8, -0.7 db	+3.0 db	+0.5, -0.4 db
2. Antenna gain (matched polarization)	+44.5 db[e]	±0.6 db	+46.0 db[f]	+0.0, -1.0 db	+25.8 db[e]	±0.4 db
3. Transmission circuit loss	+1.0 db[a]	±0.4 db	+0.1 db	+0.1, -0.0 db	+0.3 db	±0.2 db
4. Effective system noise temperature	244°K[b]	+24, -48°K	112°K[d]	+26, -44°K	1106°K	+131, -137°K
5. Carrier APC noise bandwidth ($2B_1$)	20.0 cps	±4.0 cps	20.0 cps	±4.0 cps	20.0 cps	±4.0 cps
6. Carrier threshold SNR in ($2B_1$)						
a. One-way doppler tracking	0.0 db	- -	0.0 db	- -	0.0 db	- -
b. Two-way doppler tracking	+1.0 db[c]	- -	+1.0 db[c]	- -	+1.0 db[c]	- -
c. Telemetering	+5.6 db	- -	+5.6 db	- -	+5.6 db	- -

Notes:
a. Loss 0.3 db ±0.2 db at Woomera (no diplexer)
b. System temperature 210 +19, -41°K at Woomera (no diplexer)
c. With +7.0 db SNR in transponder APC noise bandwidth
d. Includes contribution of the moon at terminal maneuver
e. Circularly polarized tracking feed, diplexed
f. Circularly polarized listening feed

Table 4.1-3

DSIF Radio Transmission Parameters
(890.046 MC)

Parameter	Goldstone Az-El Johannesburg a		MTS	
	Value	Tolerance	Value	Tolerance
1. Total transmitter power	+53.0 dbm (200 watts)	±0.2 db	+44.0 dbm (25 watts)	+0.3, -0.4 db
2. Carrier modulation loss	+3.0 db	+0.6,-0.7db	0.0 db [b]	
3. Transmission circuit loss	+0.8 db	±0.2 db	+0.8 db	±0.2 db
4. Antenna gain	+41.7 db [e]	±0.8 db	+26.3 db [e]	±0.4 db
5. Polarization loss	+3.0 db [c]	+1.3,-1.8db	+3.0 db [d]	+1.3, -1.8 db

Notes:

a. Johannesburg will not have transmitter in time for RA-3.

b. No command capability at MTS.

c. Transmitting antenna circularly polarized; receiving antenna linearly polarized; axial ratio is 1.4 db.

d. See note c. except axial ratio is 2.7 db.

e. To matched polarization.

Table 4.1-4

Spacecraft Radio Reception Parameters
(890.046 MC)

Parameter	Value	Tolerance
1. Antenna gain a.	-9.0 db	±3.0 db
b.	-4.0 db	±3.0 db
c.	0.0 db	±2.0 db
2. Transmission circuit loss	+1.9 db	±0.3 db
3. Effective system noise temperature	5900°K	+1510, -1210°K
4. Carrier APC noise bandwidth ($2B_L$)	100 cps	d.
5. Carrier threshold SNR in ($2B_L$)		
a. Two-way doppler tracking	+7.0 db	- -
b. Command reception	+5.6 db	- -

Notes:
a. Non oriented, 90 percent spherical coverage.
b. Injection +30 minutes to injection +6 hours.
c. Injection +6 hours to terminal maneuver.
d. Tolerance included in effective noise temperature.

Table 4.1-5a.

Telemetry Parameters
Modes I, II, III

Subcarrier Channel	Subcarrier Frequency (cps)	Type of Data	Information Rate	Channel Error at Threshold (1)	RF Modulation Index (radians)	RF Modulation Loss (db)	Discriminator APC Noise Bandwidth ($2B_L$, cps)	Threshold SNR in 2 B_L (db)
IRIG - 1	400	Sync	0.3 cps HP BW	0.32 rad rms	0.16	$22.6^{+2.4}_{-3.8}$	2.0 ±20%	+9.0
IRIG - 2	560	Engineering	1 SPS	5% FS rms	0.29	$17.4^{+2.5}_{-2.7}$	50 ±20%	+5.6
IRIG - 3	730	Engineering	1 SPS	5% FS rms	0.52	$12.1^{+2.4}_{-2.6}$	50 ±20%	+5.6
IRIG - 4	960	Eng., Sci.	0.1 SPS	5% FS rms	0.30	$17.1^{+2.5}_{-2.7}$	15 ±20%	+5.6
IRIG - 5	1300	Engineering	25 SPS	15% FS 2 σ	0.55	$11.6^{+2.4}_{-2.6}$	196 ±20% (2)	+5.6
IRIG - 6	1700	Engineering	25 SPS	15% FS 2 σ	0.55	$11.6^{+2.4}_{-2.6}$	196 ±20% (2)	+5.6
IRIG - 8	3000	Sci., Eng.	25 bps max.	- -	0.40	$14.5^{+1.7}_{-1.8}$	100 ±20%	+5.6
B - 2	350	Events	1 SPS	- -	0.19	$21.1^{+1.8}_{-1.9}$	6.67 ±20%	+5.6
B - 19	2100	Sync	1 pps	- -	0.56	$11.4^{+1.6}_{-1.8}$	26.5 ±20%	+9.0
B - 20	2300	Engineering	2.5 bps max.	- -	0.32	$16.5^{+1.7}_{-1.9}$	16.7 ±20%	+5.6

Notes: (1) Error due to radio noise and drift at threshold, excludes distortion and transducer errors.

(2) Effective noise bandwidth controlled by predetection bandwidth.

Table 4.1-5b

Telemetry Parameters
Mode IV

Channel	IRIG - 1	B-2	V
Subcarrier Frequency	400 cps	350 cps	3600 cps
Type of Data	Sync	Events	Video
Information Rate	0.3 cps HP BW	1 SPS	2 kc HP BW
Channel Error at Threshold	0.32 rad rms	-	27 db SNR (1)
RF Modulation Index	0.16	0.19	1.4
RF Modulation Loss	$24.0\ ^{+2.4}_{-3.8}$ db	$22.5\ ^{+1.8}_{-1.9}$ db	$2.4\ ^{+0.6}_{-1.8}$ db
Discriminator APC Noise Bandwidth ($2B_L$)	2.0 ±20% cps	6.67 ±20% cps	4.6 KC $^{+0}_{-12\%}$ (2)
Threshold SNR in $2B_L$	+9.0 db	+5.6 db	+18.7 db (3)

Notes: (1) Peak to peak signal to rms noise.

(2) Effective noise bandwidth determined by predetection bandwidth.

(3) Pulse counting discriminator, SNR in predetection bandwidth.

Table 4.1-6

Command Parameters

1.	Number of commands	
	a. Real time (action on receipt)	7
	b. Stored (magnitude, delayed action)	6
2.	Modulation type	FSK
3.	Word length	18 bits
4.	Transmission rate	1 bps
5.	Bit error rate at system threshold	1 part in 10^5 max.
6.	Command channel effective noise bandwidth	4.0 ±33% cps
7.	Threshold SNR in 4.0 cps for error rate of 1 part in 10^5	18.0 db
8.	Command channel modulation loss	$3.4^{+0.5}_{-0.6}$ db

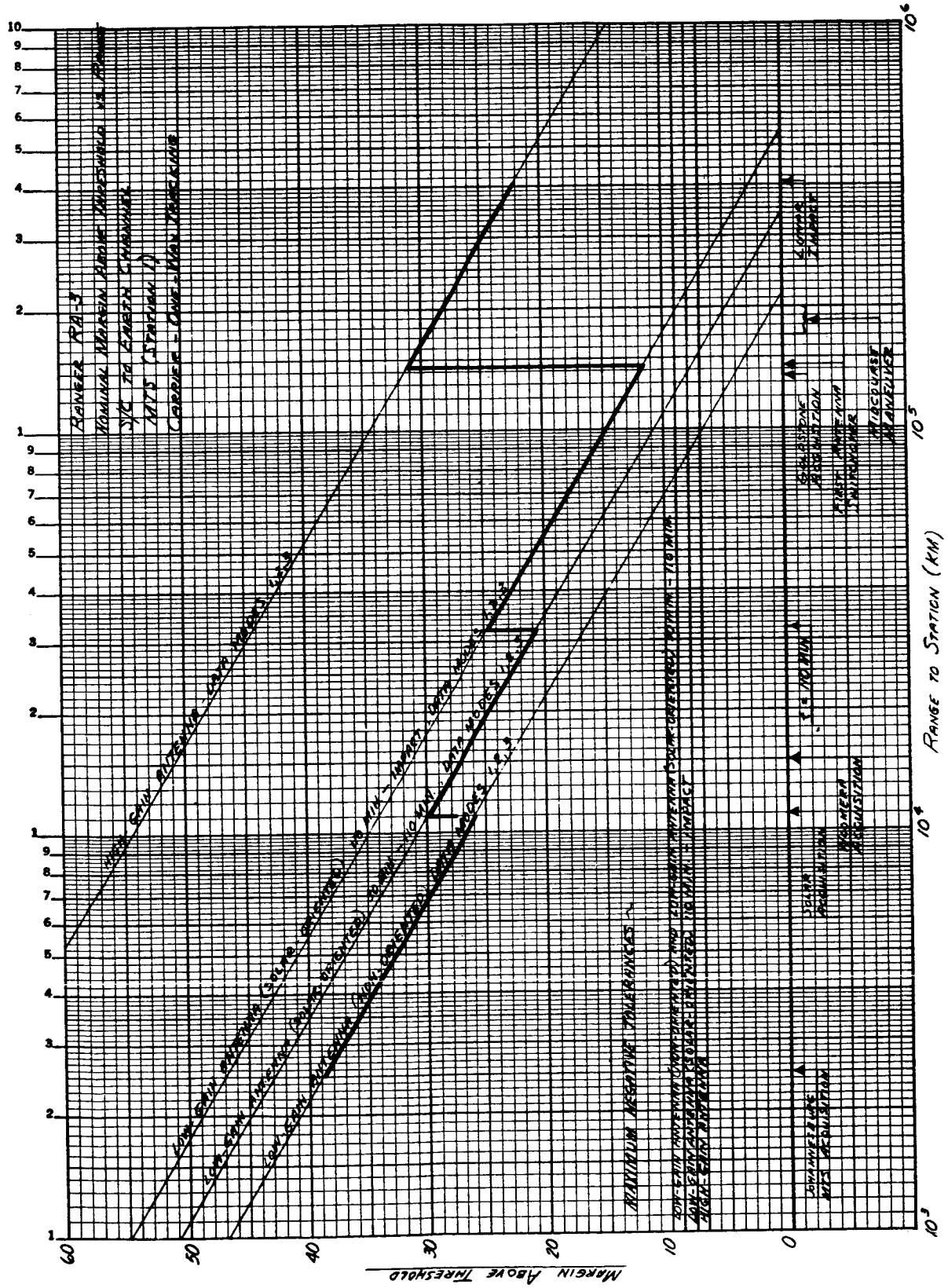
RANGER RA-3
NOMINAL MARGIN ABOVE THRESHOLD VS. RANGE
S/C TO EARTH CHANNEL
MTS (STATION 1)
CARRIER - ONE-WAY TRACKING
HIGH GAIN ANTENNA - DATA MODES 1,2,3
LOW-GAIN ANTENNA (SOLAR-ORIENTED) 10 MIN - IMPACT - DATA MODES 1,2,3
LOW-GAIN ANTENNA (SOLAR-ORIENTED) 10 MIN - 10 MIN - DATA MODES 1,2,3
LOW-GAIN ANTENNA (NON-ORIENTED) DATA MODES 1,2,3
MAXIMUM NEGATIVE TOLERANCES
LOW-GAIN ANTENNA (NON-ORIENTED) AND LOW-GAIN ANTENNA (SOLAR-ORIENTED) 10 MIN - 10 MIN
LOW-GAIN ANTENNA (SOLAR-ORIENTED) 10 MIN - IMPACT
HIGH-GAIN ANTENNA
JOHANNESBURG MTS ACQUISITION
SOLAR ACQUISITION
MOOMERA ACQUISITION
GOLDSTONE ACQUISITION
FIRST ANTENNA SWITCHOVER
MIDCOURSE MANEUVER
LUNAR IMPACT
RANGE TO STATION (KM)
MARGIN ABOVE THRESHOLD

Figure 4.2-1a.

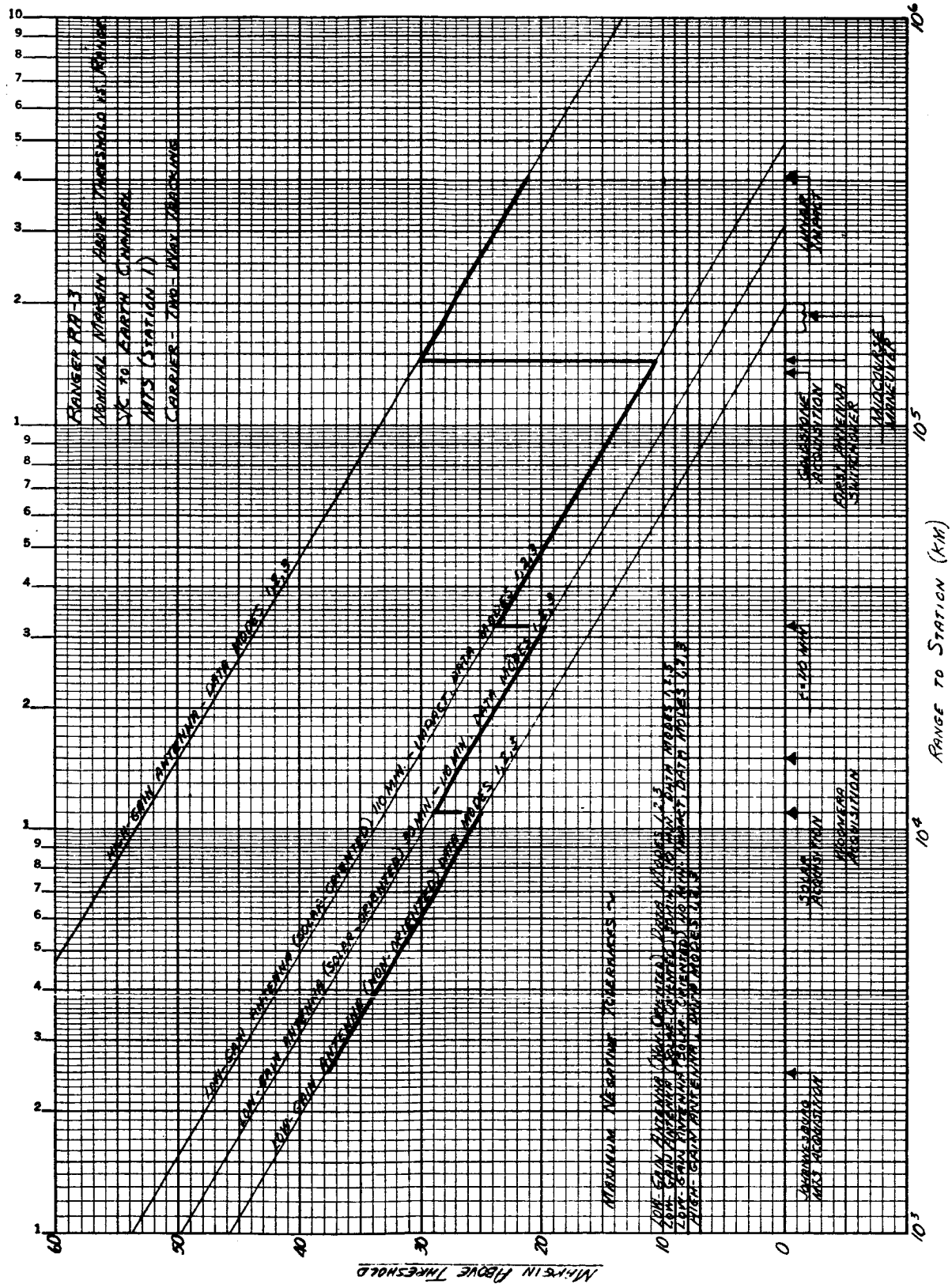
RANGER RA-3
NOMINAL MARGIN ABOVE THRESHOLD VS RANGE
S/C TO EARTH CHANNEL
MTS (STATION 1)
CARRIER - TWO-WAY TRACKING
HIGH-GAIN ANTENNA - DATA MODES 1,2,3
LOW-GAIN ANTENNA (SOLAR-ORIENTED) 110 MIN. - IMPACT, DATA MODES 1,2,3
LOW-GAIN ANTENNA (SOLAR-ORIENTED) 30 MIN. - 110 MIN. DATA MODES 1,2,3
LOW-GAIN ANTENNA (NON-ORIENTED) DATA MODES 1,2,3
MAXIMUM NEGATIVE TOLERANCES
JOHANNESBURG MTS ACQUISITION
SOLAR ACQUISITION
MOONERA ACQUISITION
GOLDSTONE ACQUISITION
FIRST ANTENNA SWITCHOVER
MIDCOURSE MANEUVER
LUNAR IMPACT
RANGE TO STATION (KM)
MARGIN ABOVE THRESHOLD

Figure 4.2-1b.

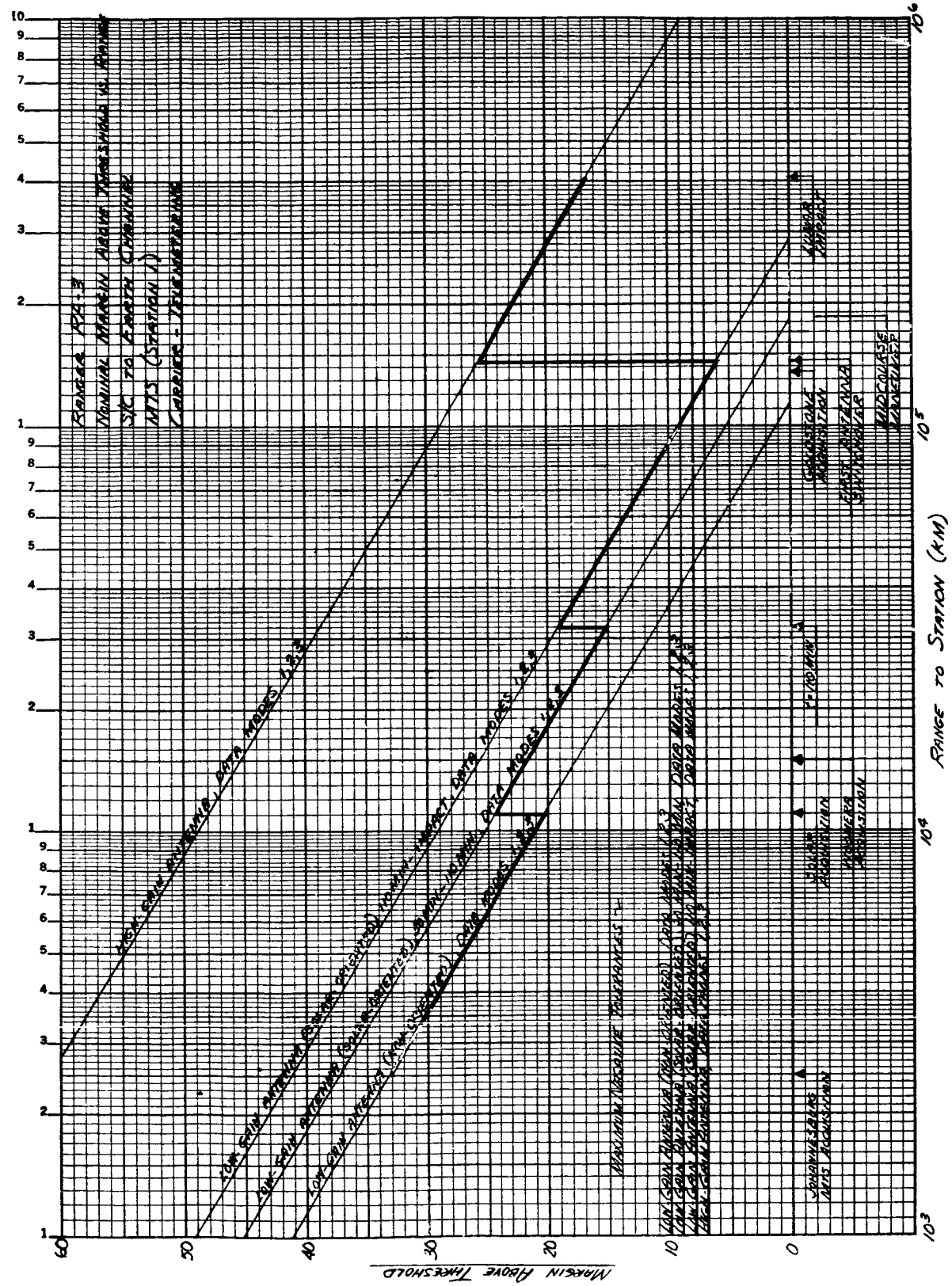
RANGER RA-3
NOMINAL MARGIN ABOVE THRESHOLD VS. RANGE
S/C TO EARTH CHANNEL
MTS (STATION 1)
CARRIER - TELEMETERING
HIGH-GAIN ANTENNA, DATA MODES 1,2,3
LOW-GAIN ANTENNA (SOLAR-ORIENTED) 10 MIN-IMPACT, DATA MODES 1,2,3
LOW-GAIN ANTENNA (SOLAR-ORIENTED) 30 MIN-10 MIN, DATA MODES 1,2,3
LOW-GAIN ANTENNA (KNW-ORIENTED) DATA MODES 1,2,3
MAXIMUM NEGATIVE TOLERANCES
LOW GAIN ANTENNA (NON-ORIENTED) DATA MODES 1,2,3
LOW GAIN ANTENNA (SOLAR-ORIENTED) 10 MIN-10 MIN, DATA MODES 1,2,3
LOW GAIN ANTENNA (SOLAR-ORIENTED) 10 MIN-IMPACT, DATA MODES 1,2,3
HIGH-GAIN ANTENNA, DATA MODES 1,2,3
LUNAR IMPACT
GOLDSTONE ACQUISITION
FIRST ANTENNA SWITCHOVER
MIDCOURSE MANEUVER
t=110 MIN
SOLAR ACQUISITION
MOONERA ACQUISITION
JOHANNESBURG MTS ACQUISITION
RANGE TO STATION (KM)
MARGIN ABOVE THRESHOLD
60
50
40
30
20
10
0
10^3
10^4
10^5
10^6

Figure 4.2-1c.

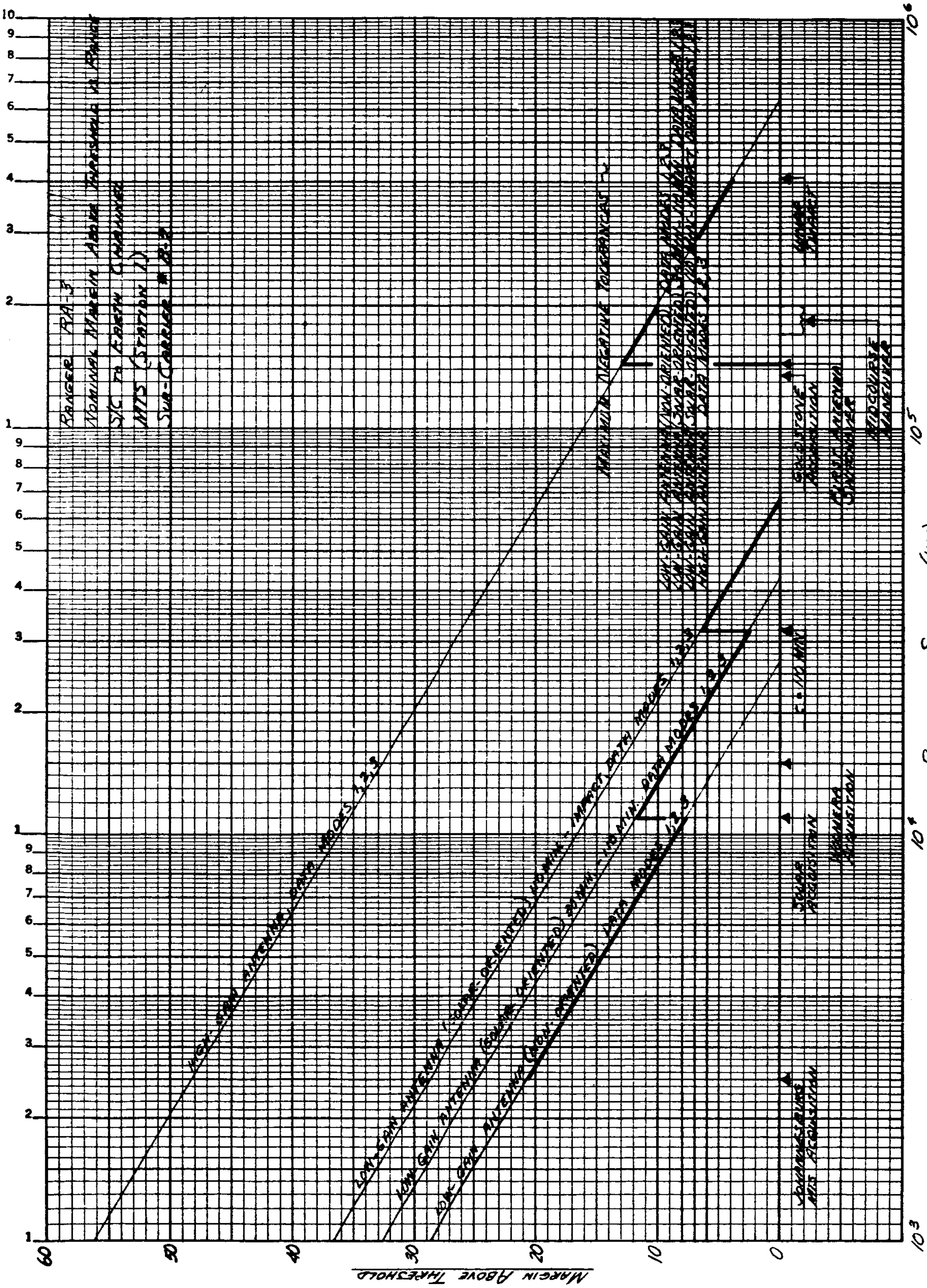
Ranger RA-3
Nominal Margin Above Threshold vs Range
S/C to Earth Channel
MTS (Station 1)
Sub-Carrier # B-2
Range to Station (KM)
Margin Above Threshold

Figure 4.2-1d.

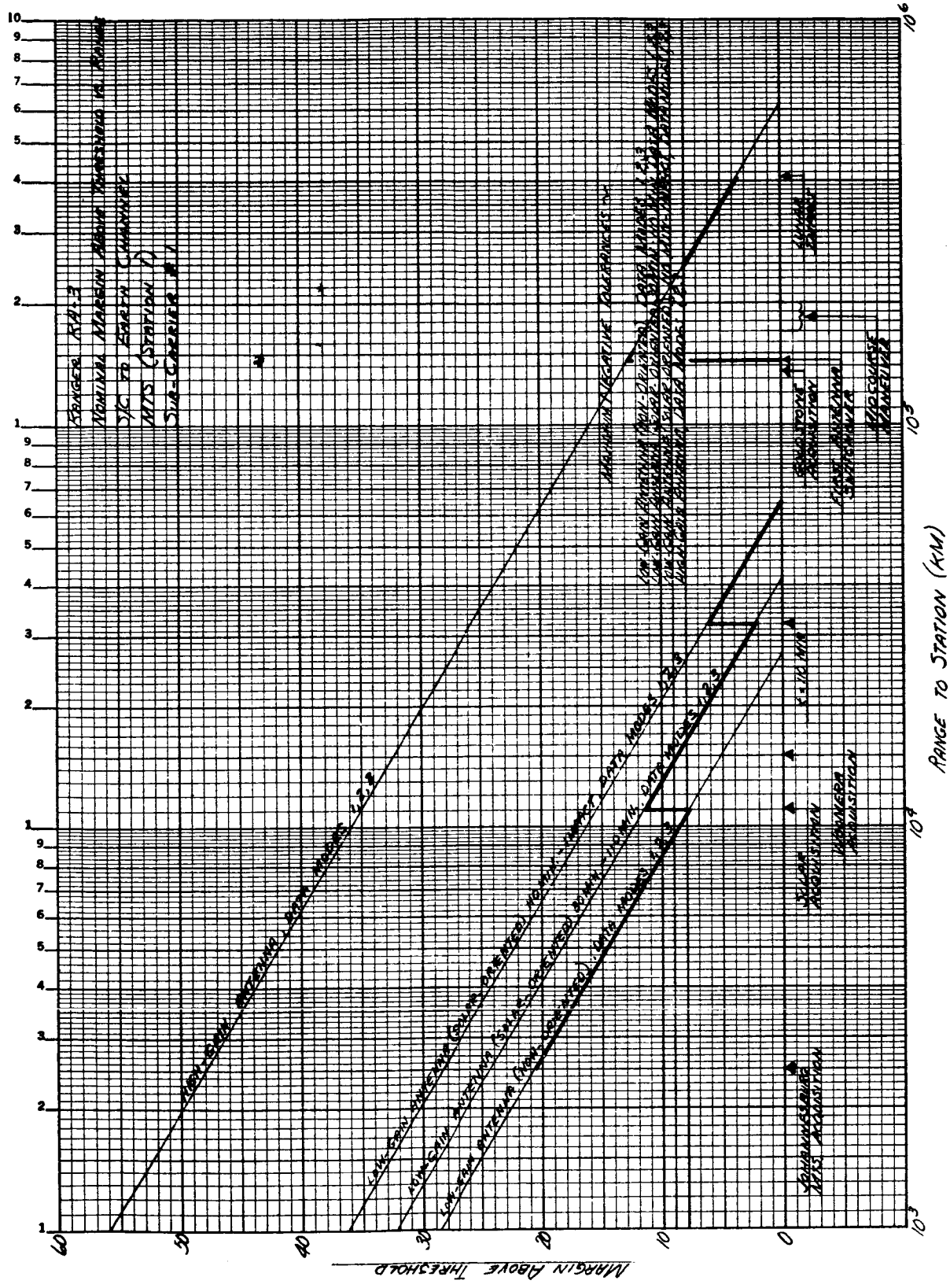
Ranger RA-3
Nominal Margin Above Threshold vs Range
S/C to Earth Channel
MTS (Station 7)
Sub-Carrier #1
Range to Station (km)
Margin Above Threshold

Figure 4.2-1e.

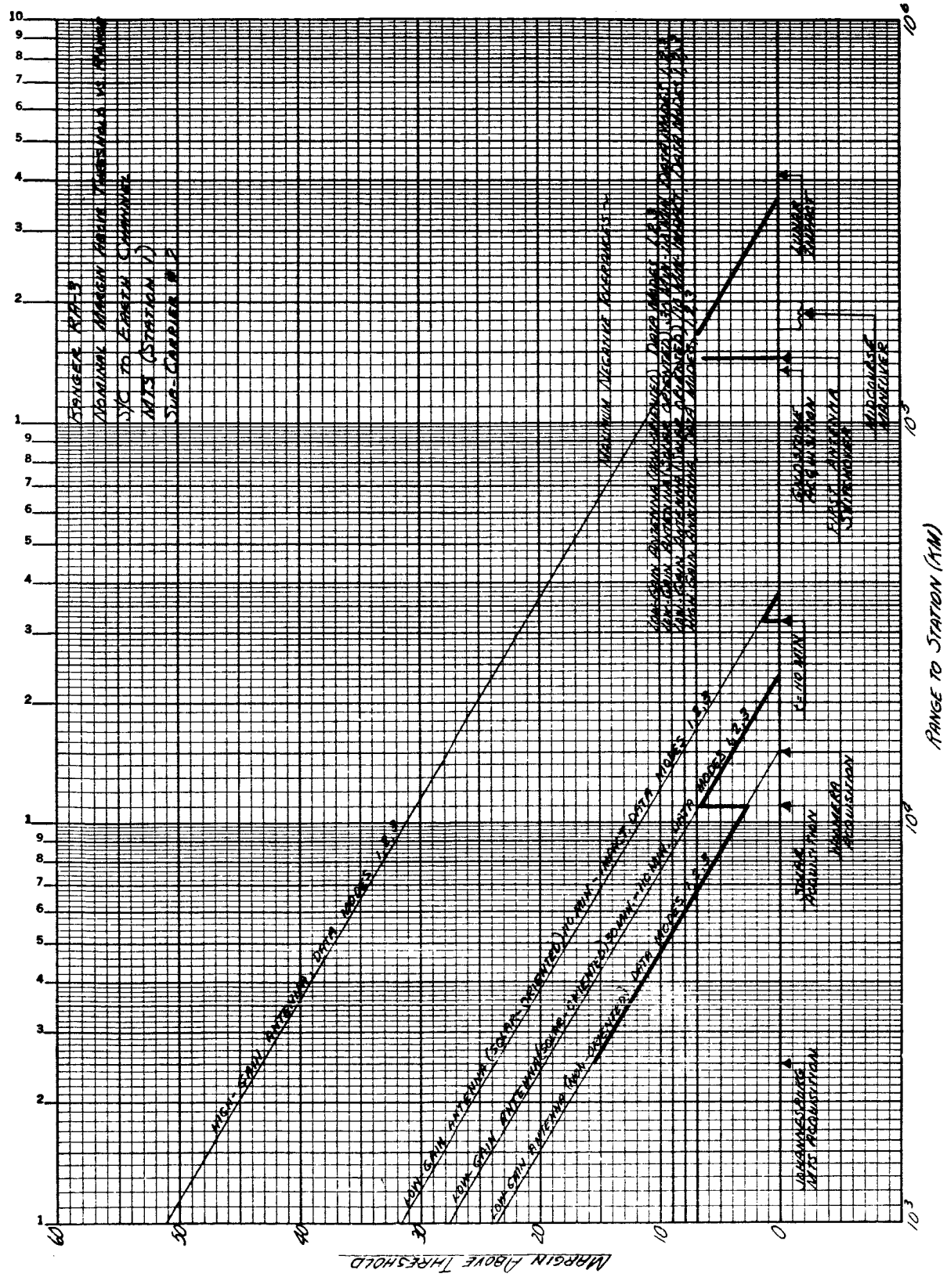
RANGER RA-3
NOMINAL MARGIN ABOVE THRESHOLD VS RANGE
S/C TO EARTH CHANNEL
MTS (STATION 1)
SUB-CARRIER #2
MAXIMUM NEGATIVE TOLERANCES
HIGH-GAIN ANTENNA DATA MODES 1,2,3
LOW-GAIN ANTENNA (SOLAR-ORIENTED) 10 MIN - IMPACT DATA MODES 1,2,3
LOW-GAIN ANTENNA (SOLAR-ORIENTED) 30 MIN - 110 MIN DATA MODES 1,2,3
LOW-GAIN ANTENNA (NON-ORIENTED) DATA MODES 1,2,3
JOHANNESBURG MTS ACQUISITION
SOLAR ACQUISITION
HOOMERA ACQUISITION
t = 110 MIN
GOLDSTONE ACQUISITION
FIRST ANTENNA SWITCHOVER
MIDCOURSE MANEUVER
LUNAR IMPACT
RANGE TO STATION (KM)
MARGIN ABOVE THRESHOLD

Figure 4.2-1f.

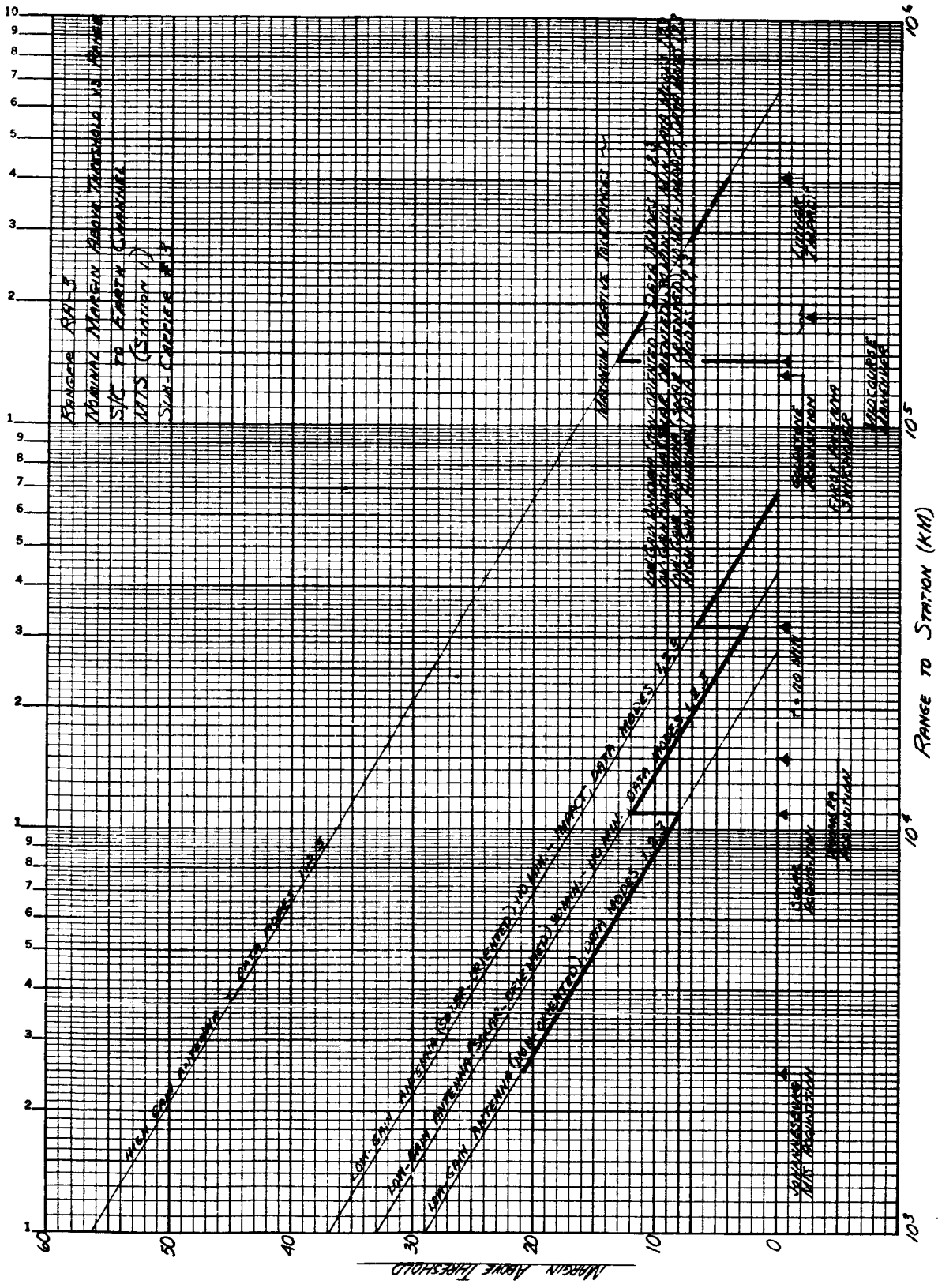

Figure 4.2-1g.

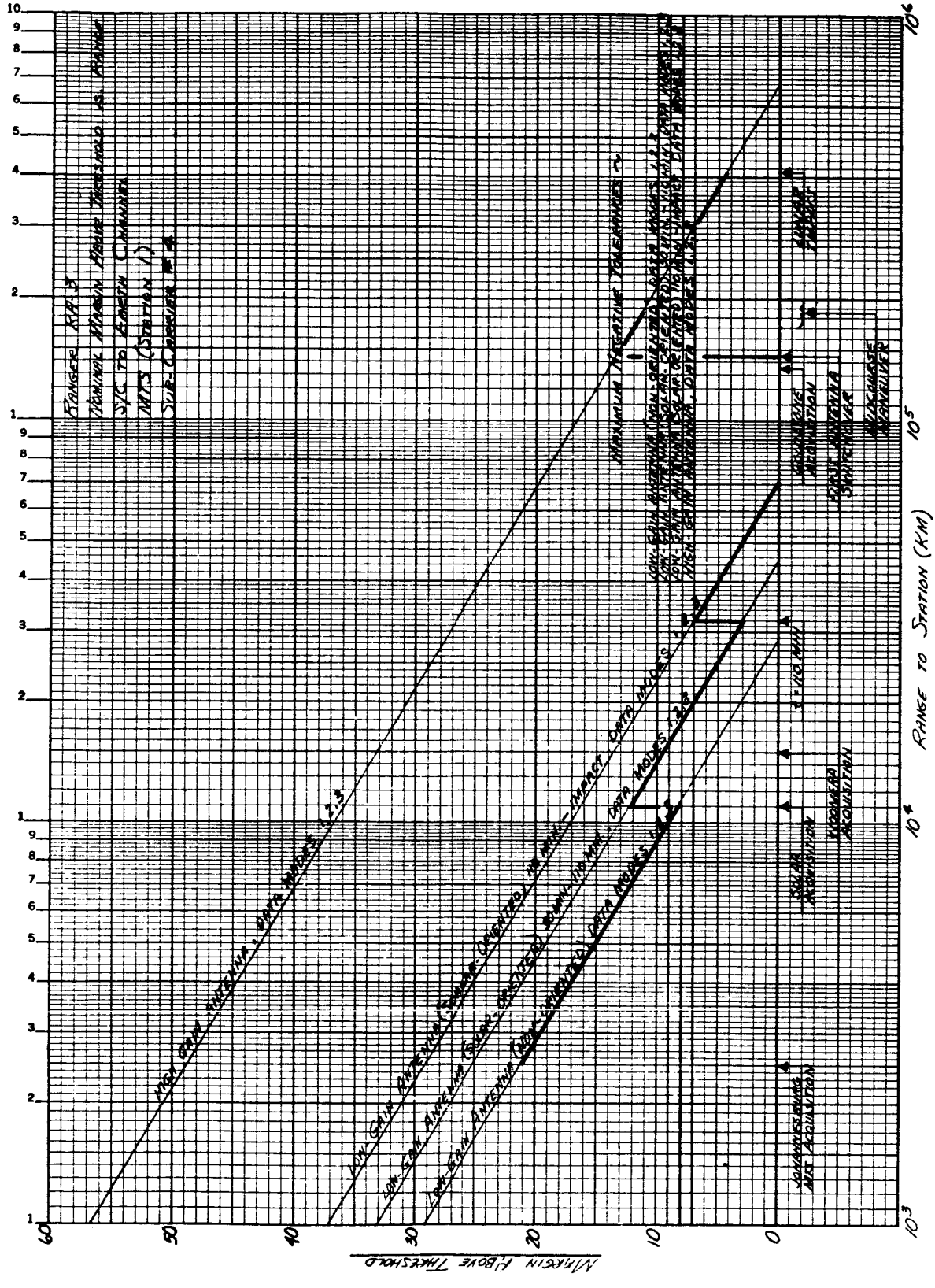
RANGER RA-3
NOMINAL MARGIN ABOVE THRESHOLD VS. RANGE
S/C TO EARTH CHANNEL
MTS (STATION 1)
SUB-CARRIER #4
MAXIMUM NEGATIVE TOLERANCES ~
HIGH GAIN ANTENNA, DATA MODES 1,2,3
LOW-GAIN ANTENNA (SOLAR-ORIENTED) 10 MIN.-IMPACT DATA MODES 1,2,3
LOW-GAIN ANTENNA (SOLAR-ORIENTED) 30 MIN.-110 MIN. DATA MODES 1,2,3
LOW-GAIN ANTENNA (NON-ORIENTED) DATA MODES 1,2,3
JOHANNESBURG MTS ACQUISITION
SOLAR ACQUISITION
WOOMERA ACQUISITION
t = 110 MIN
GOLDSTONE ACQUISITION
FIRST ANTENNA SWITCHOVER
MIDCOURSE MANEUVER
LUNAR IMPACT
RANGE TO STATION (KM)
MARGIN ABOVE THRESHOLD
60
50
40
30
20
10
0
10^3
10^4
10^5
10^6

Figure 4.2-1h.

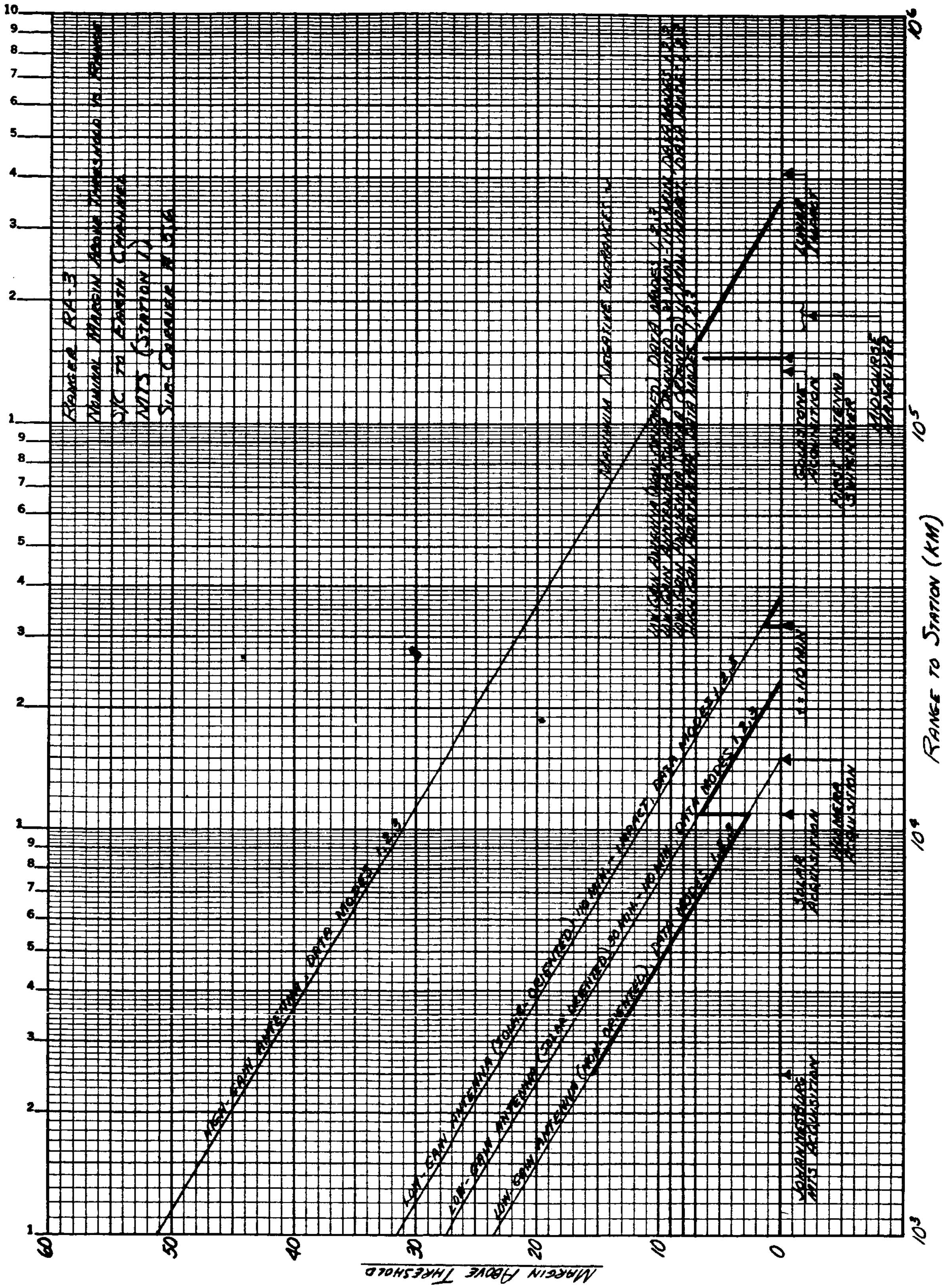

Figure 4.2-11.

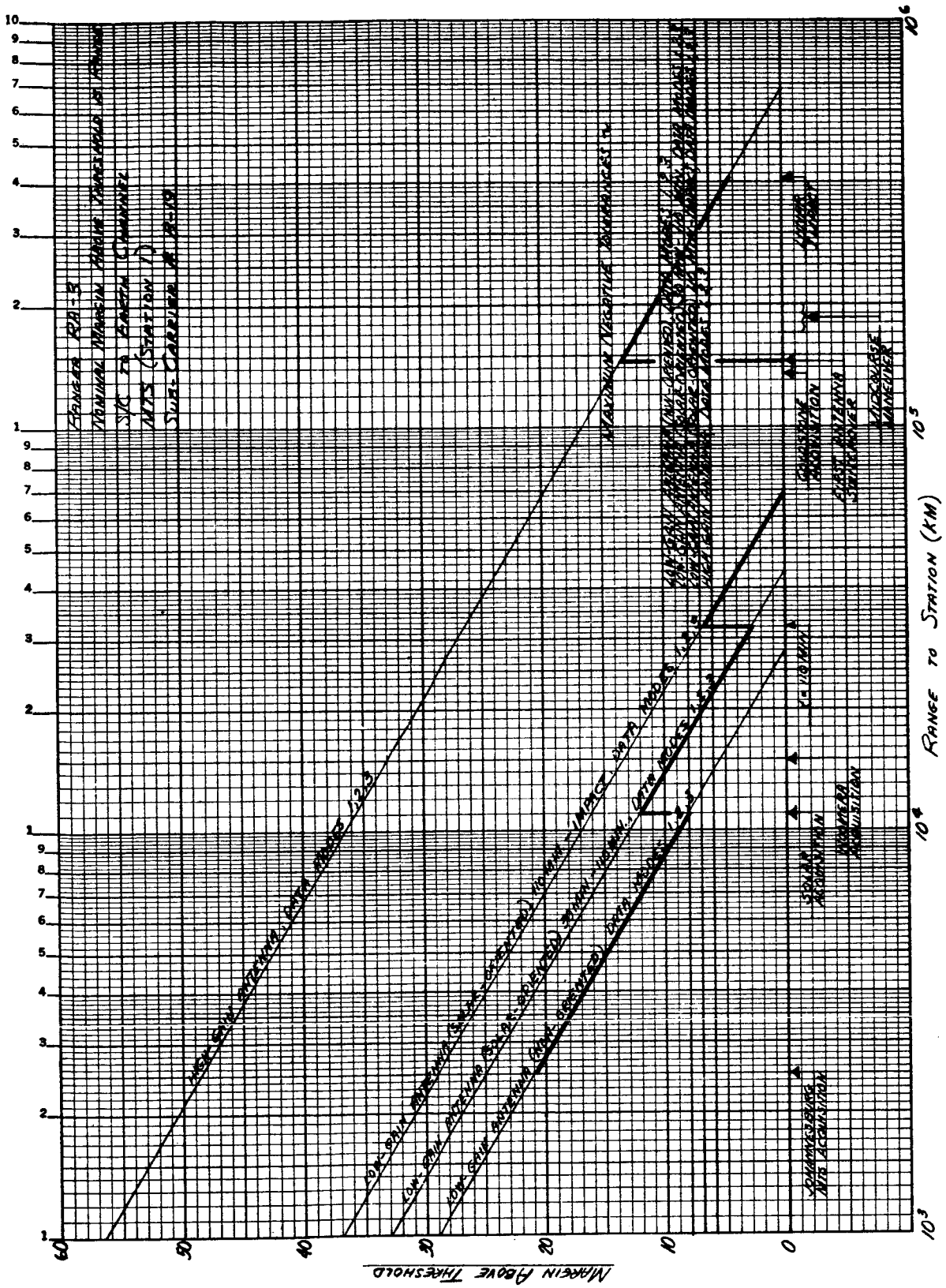
RANGE RA-3
NOMINAL MARGIN ABOVE THRESHOLD IS RANGE
S/C TO EARTH CHANNEL
MTS (STATION 1)
SUB-CARRIER # A-19
MAXIMUM NEGATIVE TOLERANCES
HIGH-GAIN ANTENNA, DATA MODES 1,2,3
LOW-GAIN ANTENNA (SOLAR-ORIENTED) 10 MIN - IMPACT DATA MODES 1,2,3
LOW-GAIN ANTENNA (SOLAR-ORIENTED) 30 MIN - 10 MIN. DATA MODES 1,2,3
LOW-GAIN ANTENNA (NON-ORIENTED) DATA MODES 1,2,3
COVERSTONE ACQUISITION
FIRST ANTENNA STRUCTURE
MIDCOURSE MANEUVER
SOLAR ACQUISITION
MOONERA ACQUISITION
JOHANNESBURG MTS ACQUISITION
RANGE TO STATION (KM)
MARGIN ABOVE THRESHOLD

Figure 4.2-1j.

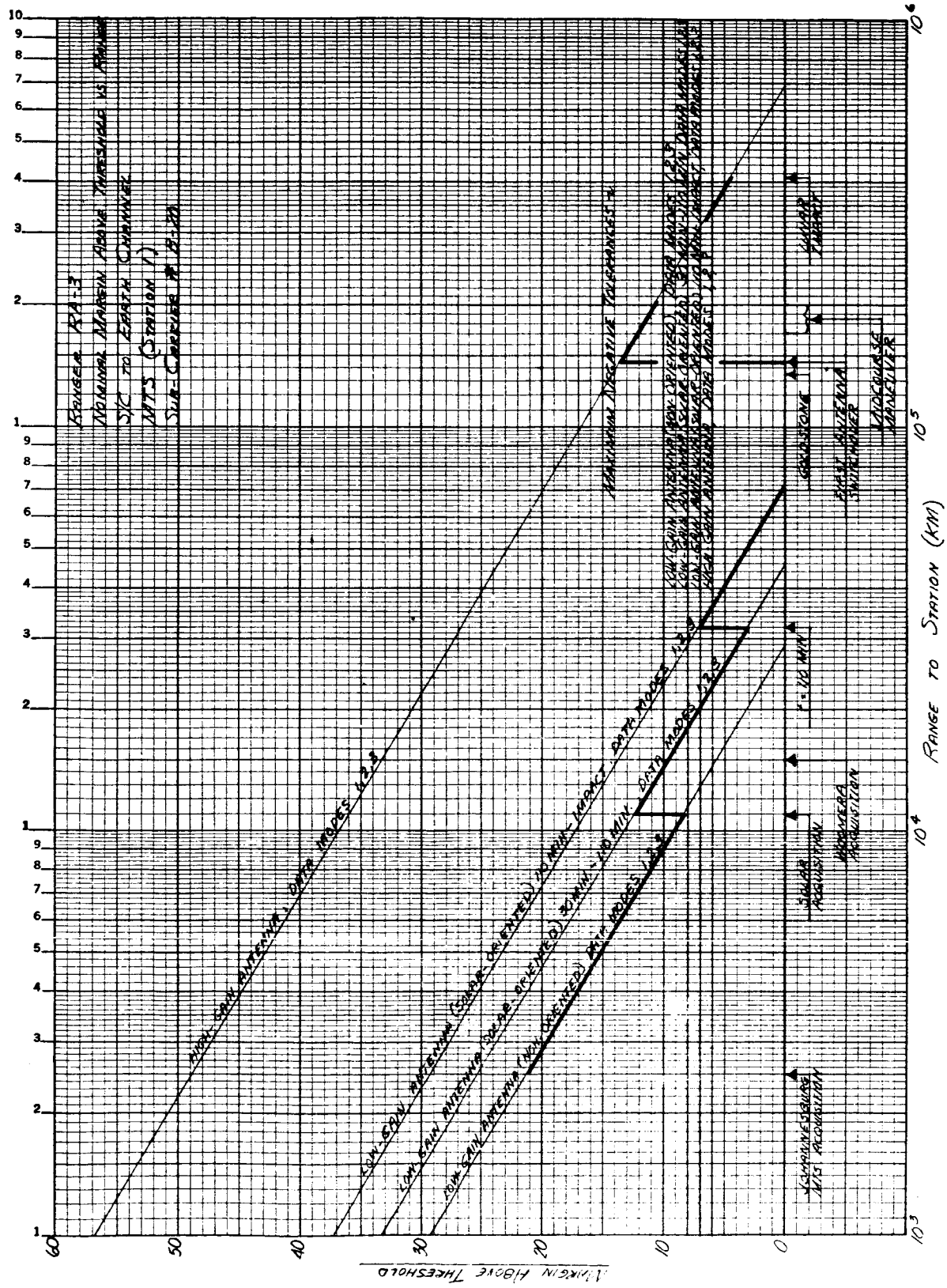
RANGER RA-3
NOMINAL MARGIN ABOVE THRESHOLD VS RANGE
S/C TO EARTH CHANNEL
MTS (STATION 1)
SUB-CARRIER # B-20
MAXIMUM NEGATIVE TOLERANCES
HIGH-GAIN ANTENNA, DATA MODES 1,2,3
LOW-GAIN ANTENNA (SOLAR-ORIENTED) 10 MIN-IMPACT, DATA MODES 1,2,3
LOW-GAIN ANTENNA (SOLAR-ORIENTED) 30 MIN-110 MIN, DATA MODES 1,2,3
LOW-GAIN ANTENNA (NON-ORIENTED) DATA MODES 1,2,3
JOHANNESBURG MTS ACQUISITION
SOLAR ACQUISITION
WOOMERA ACQUISITION
GOLDSTONE
FIRST ANTENNA SWITCHOVER
MIDCOURSE MANEUVER
LUNAR IMPACT
RANGE TO STATION (KM)
MARGIN ABOVE THRESHOLD

Figure 4.2-1k.

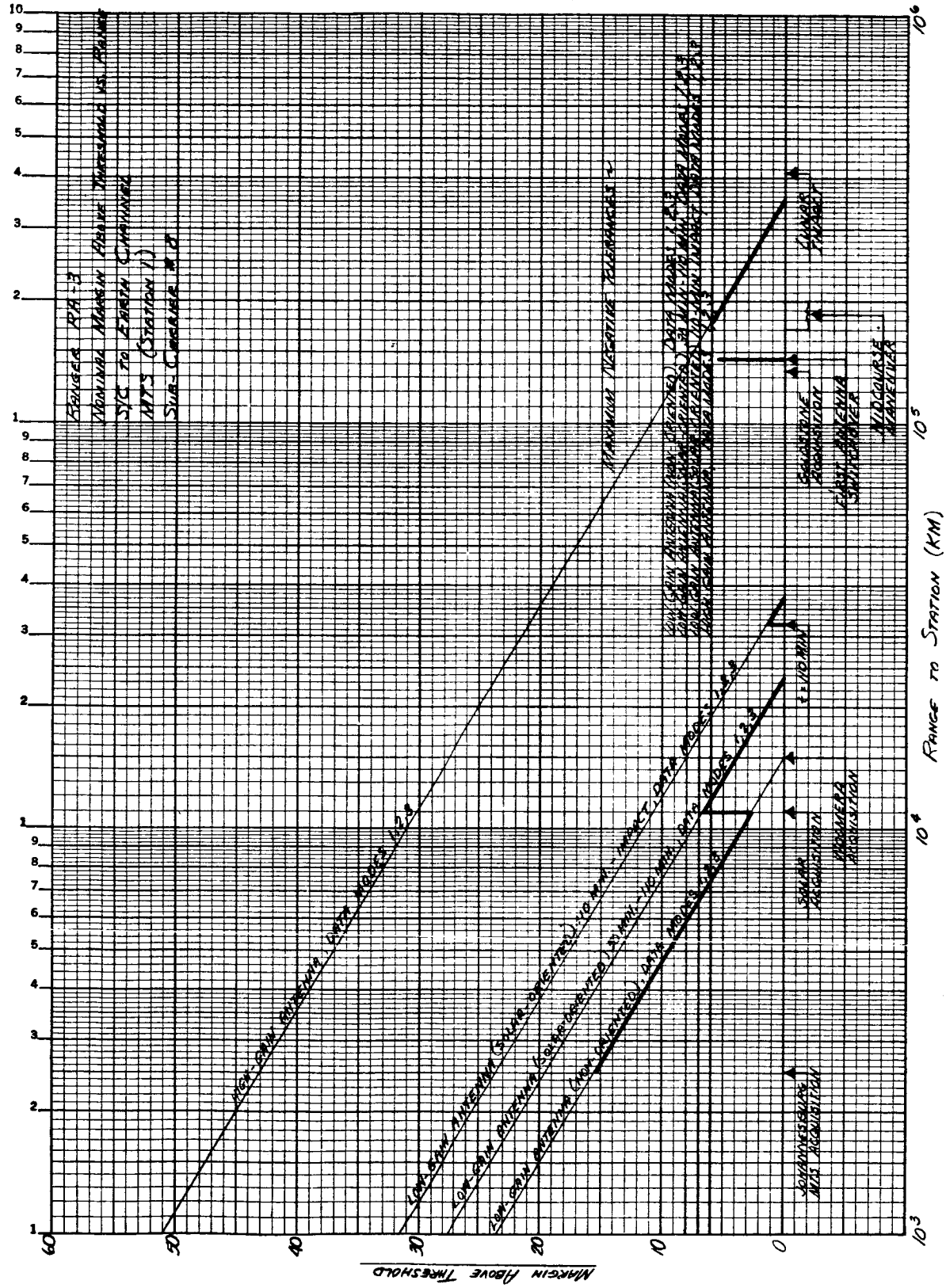
RANGER RA-3
NOMINAL MARGIN ABOVE THRESHOLD VS. RANGE
S/C TO EARTH CHANNEL
MTS (STATION 1)
SUB-CARRIER #8
MAXIMUM NEGATIVE TOLERANCES
HIGH-GAIN ANTENNA, DATA MODES 1,2,3
LOW-GAIN ANTENNA (SOLAR-ORIENTED) 110 MIN. - IMPACT, DATA MODES 1,2,3
LOW-GAIN ANTENNA (SOLAR-ORIENTED) 30 MIN.-110 MIN., DATA MODES 1,2,3
LOW-GAIN ANTENNA (NON-ORIENTED), DATA MODES 1,2,3
LUNAR IMPACT
GOLDSTONE ACQUISITION
FIRST ANTENNA SWITCHOVER
MIDCOURSE MANEUVER
t = 110 MIN
SOLAR ACQUISITION
MOOMERA ACQUISITION
JOHANNESBURG MTS ACQUISITION
RANGE TO STATION (KM)
MARGIN ABOVE THRESHOLD
60
50
40
30
20
10
0
10^3
10^4
10^5
10^6

Figure 4.2-11.

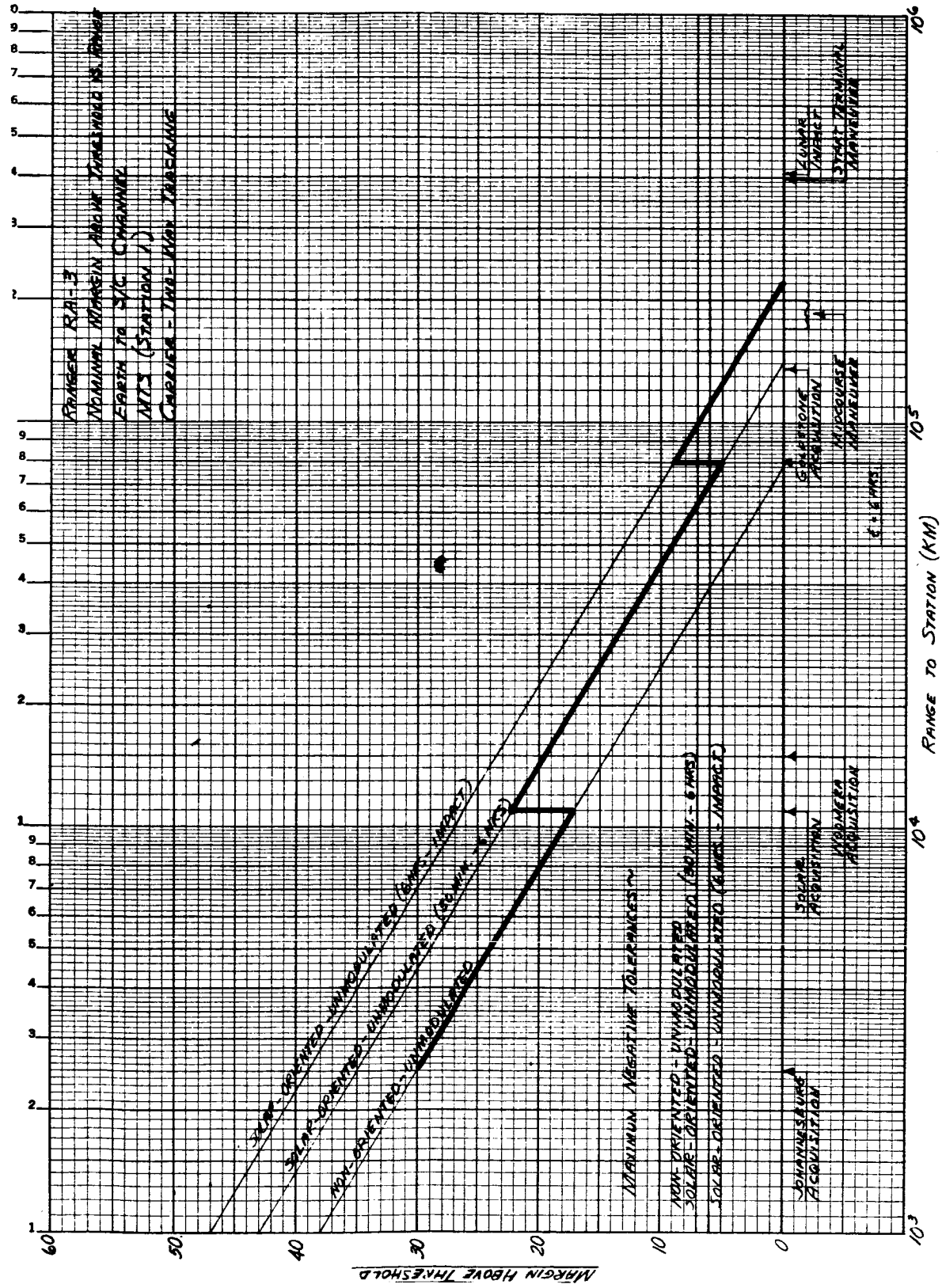
RANGER RA-3
NOMINAL MARGIN ABOVE THRESHOLD VS. RANGE
EARTH TO S/C CHANNEL
MTS (STATION 1)
CARRIER - TWO-WAY TRACKING
SOLAR-ORIENTED-UNMODULATED (6 HRS - IMPACT)
SOLAR-ORIENTED-UNMODULATED (30 MIN. - 6 HRS)
NON-ORIENTED-UNMODULATED
MAXIMUM NEGATIVE TOLERANCES ~
NON-ORIENTED - UNMODULATED
SOLAR-ORIENTED-UNMODULATED (30 MIN. - 6 HRS)
SOLAR-ORIENTED-UNMODULATED (6 HRS - IMPACT)
JOHANNESBURG ACQUISITION
SOLAR ACQUISITION
WOOMERA ACQUISITION
GOLDSTONE ACQUISITION
MIDCOURSE MANEUVER
LUNAR IMPACT
START TERMINAL MANEUVER
RANGE TO STATION (KM)
MARGIN ABOVE THRESHOLD

Figure 4.2-2.

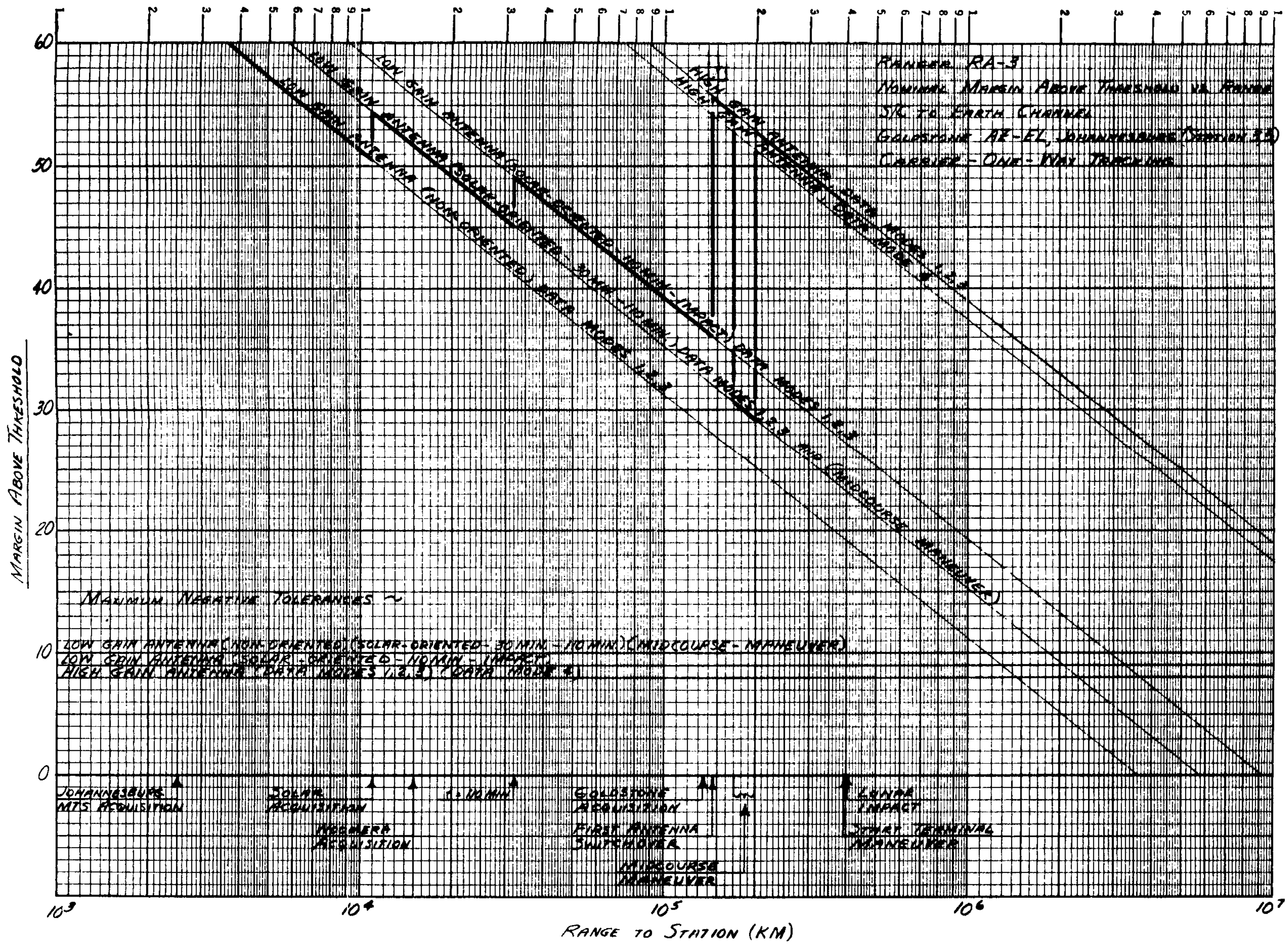
Ranger RA-3
Nominal Margin Above Threshold vs. Range
S/C to Earth Channel
Goldstone AZ-EL, Johannesburg (Station 3.5)
Carrier - One-Way Tracking
Low Gain Antenna (Non-Oriented) Data Modes 1, 2, 3
Maximum Negative Tolerances ~
Johannesburg MTS Acquisition
Solar Acquisition
Woomera Acquisition
Goldstone Acquisition
First Antenna Switchover
Midcourse Maneuver
Lunar Impact
Start Terminal Maneuver
Margin Above Threshold
Range to Station (KM)

Figure 4.2-3a.

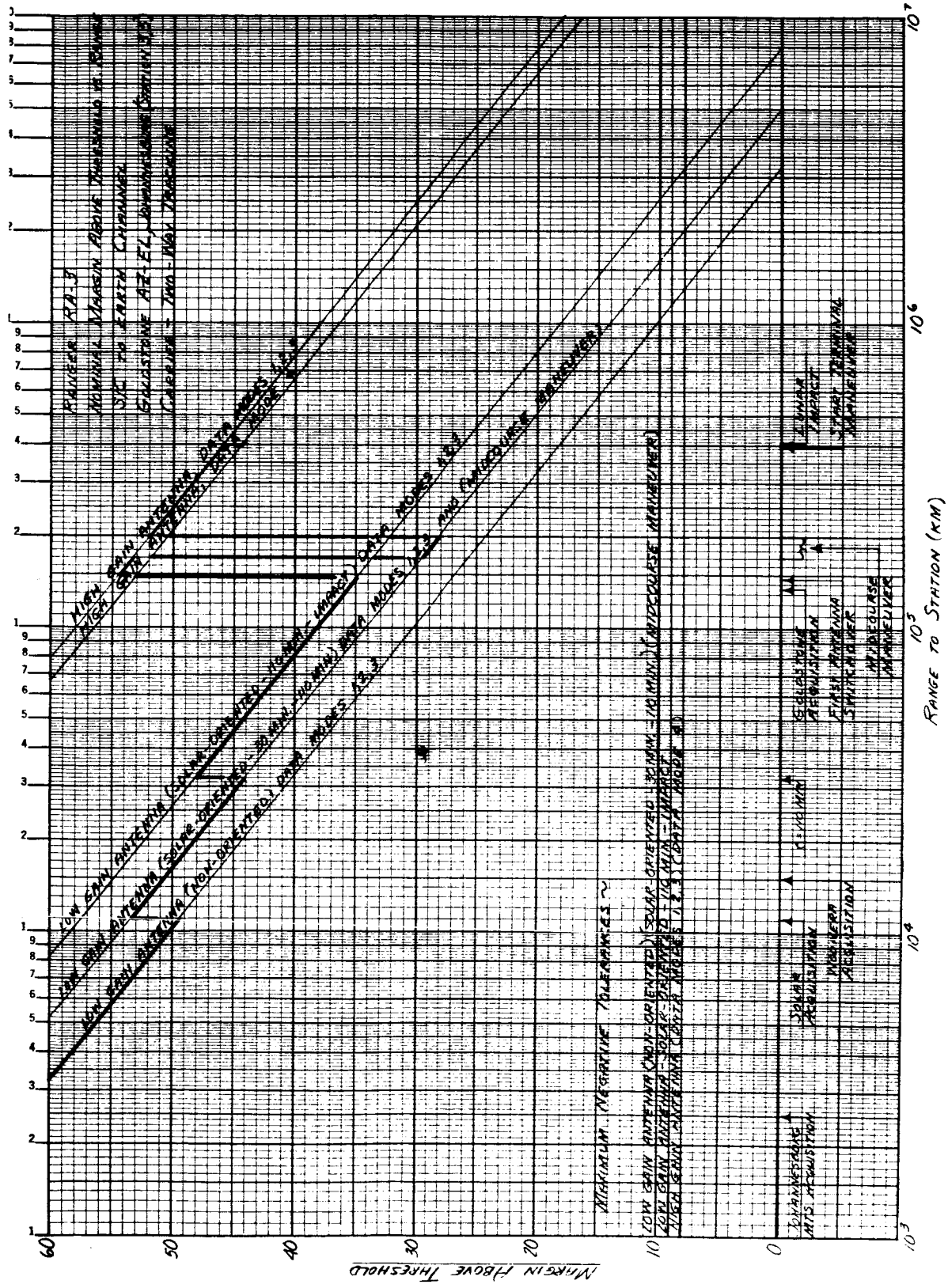
RANGER RA-3
NOMINAL MARGIN ABOVE THRESHOLD VS. RANGE
S/C TO EARTH CHANNEL
GOLDSTONE AZ-EL, JOHANNESBURG (STATION 3.5)
CARRIER - TWO-WAY TRACKING
HIGH GAIN ANTENNA, DATA MODES 1,2,3
HIGH GAIN ANTENNA, DATA MODE 4
LOW GAIN ANTENNA (SOLAR-ORIENTED - 10 MIN - IMPACT) DATA MODES 1,2,3
LOW GAIN ANTENNA (SOLAR-ORIENTED - 30 MIN - 110 MIN) DATA MODES 1,2,3 AND (MIDCOURSE MANEUVER)
LOW GAIN ANTENNA (NON-ORIENTED) DATA MODES 1,2,3
MAXIMUM NEGATIVE TOLERANCES ~
LOW GAIN ANTENNA (NON-ORIENTED) (SOLAR-ORIENTED - 30 MIN - 110 MIN) (MIDCOURSE MANEUVER)
LOW GAIN ANTENNA - SOLAR-ORIENTED - 110 MIN - IMPACT
HIGH GAIN ANTENNA (DATA MODES 1,2,3) (DATA MODE 4)
JOHANNESBURG MTS ACQUISITION
SOLAR ACQUISITION
WOOMERA ACQUISITION
GOLDSTONE ACQUISITION
FIRST ANTENNA SWITCHOVER
MIDCOURSE MANEUVER
LUNAR IMPACT
START TERMINAL MANEUVER
RANGE TO STATION (KM)
MARGIN ABOVE THRESHOLD

Figure 4.2-3b.

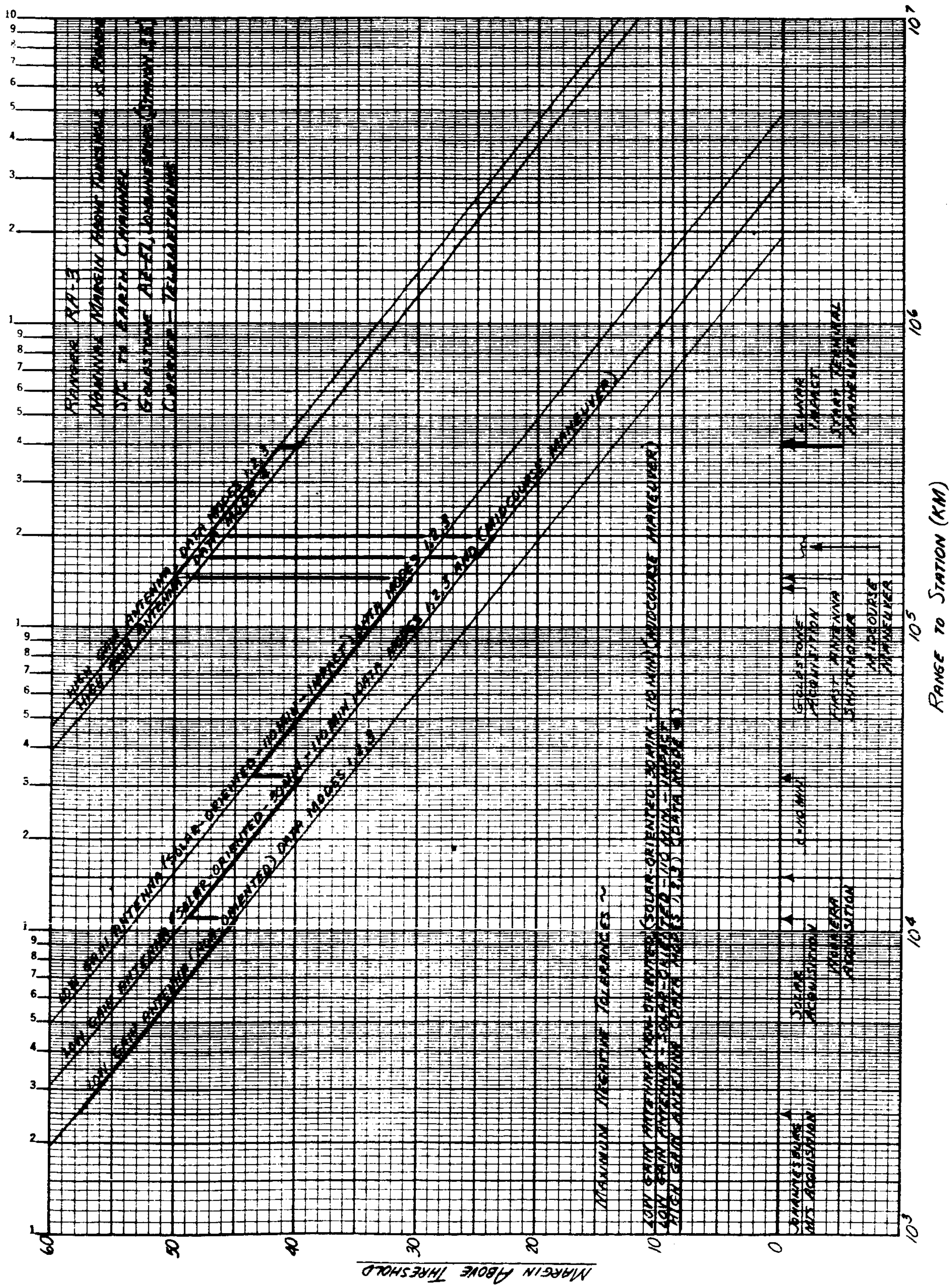

Figure 4.2-3c.

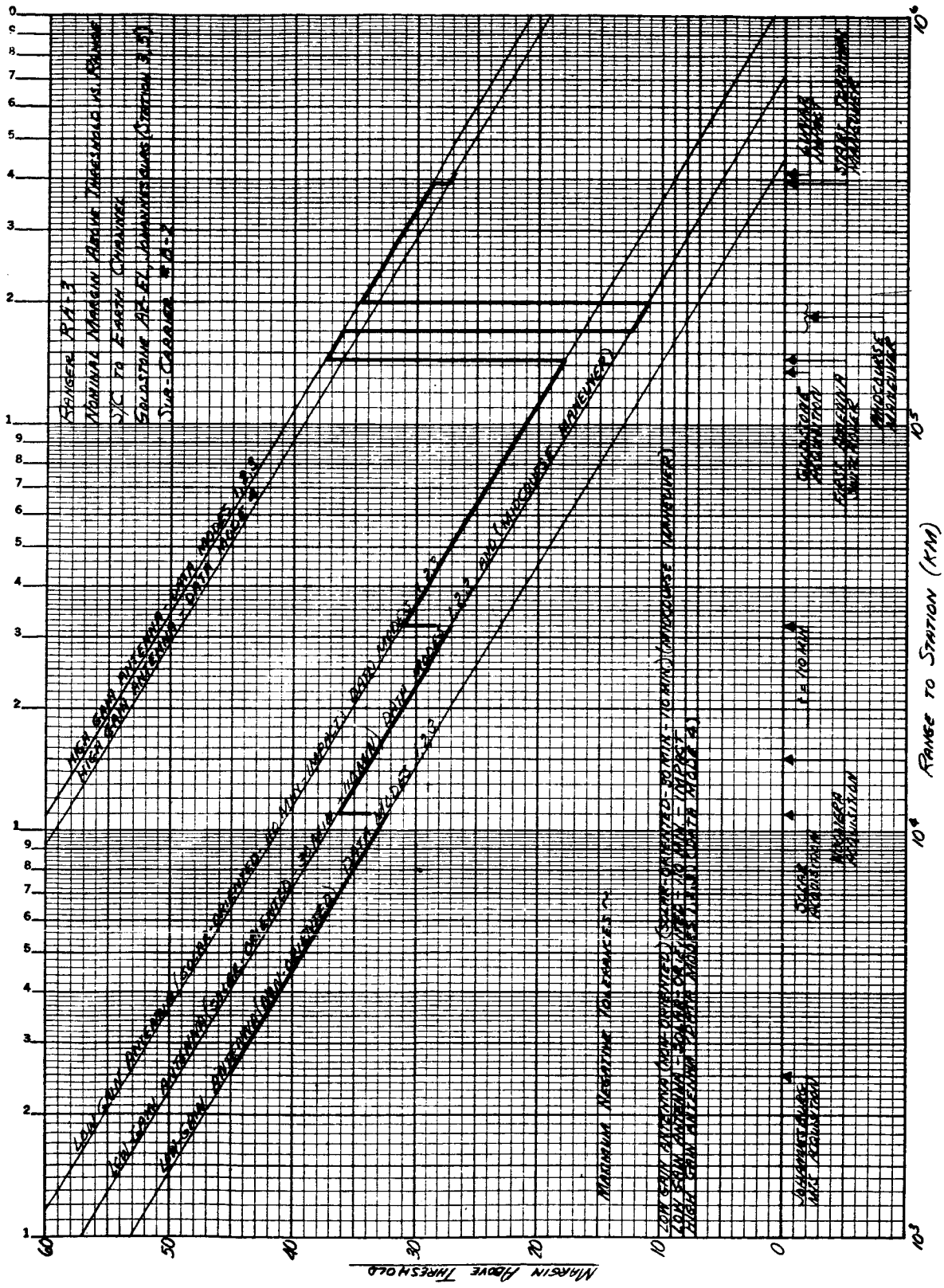
Range to Station (KM)
Margin Above Threshold
Maximum Negative Tolerances

Figure 4.2-3d.

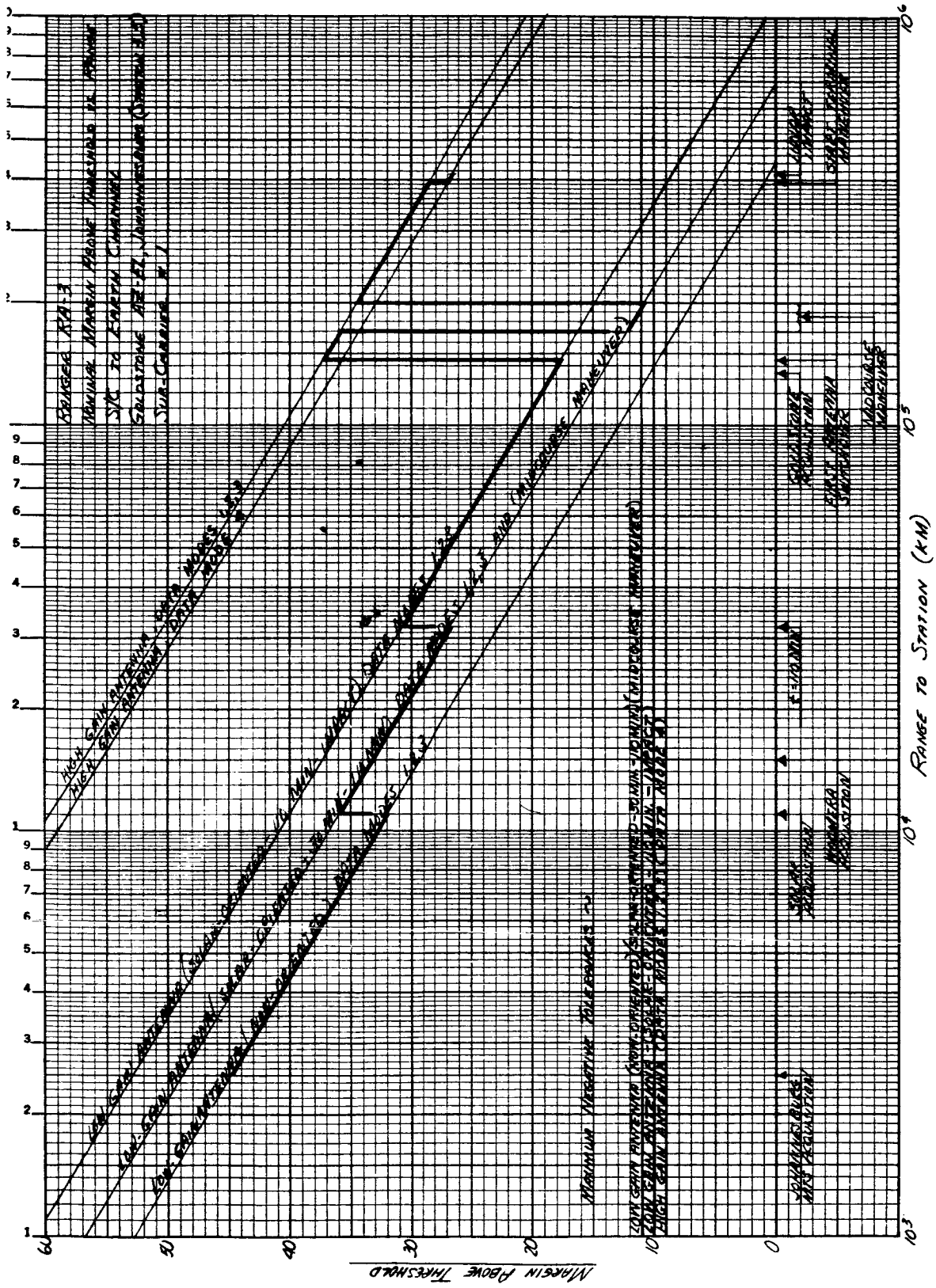
RANGER RA-3
NOMINAL MARGIN ABOVE THRESHOLD VS. RANGE
S/C TO EARTH CHANNEL
GOLDSTONE AZ-EL, JOHANNESBURG
SUB-CARRIER #1
MAXIMUM NEGATIVE TOLERANCES ~
RANGE TO STATION (KM)
MARGIN ABOVE THRESHOLD

Figure 4.2-3e.

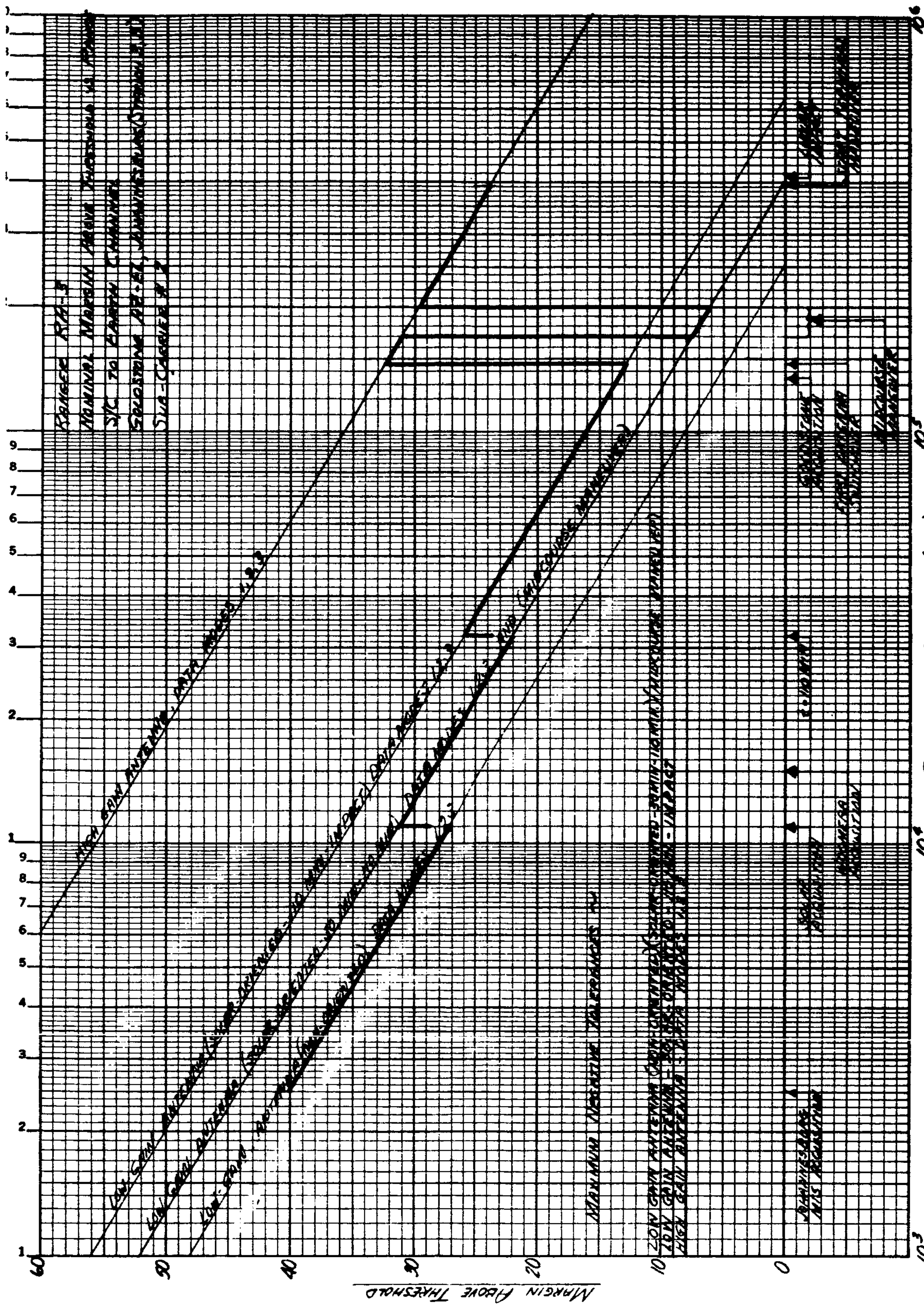

Figure 4.2-3f.

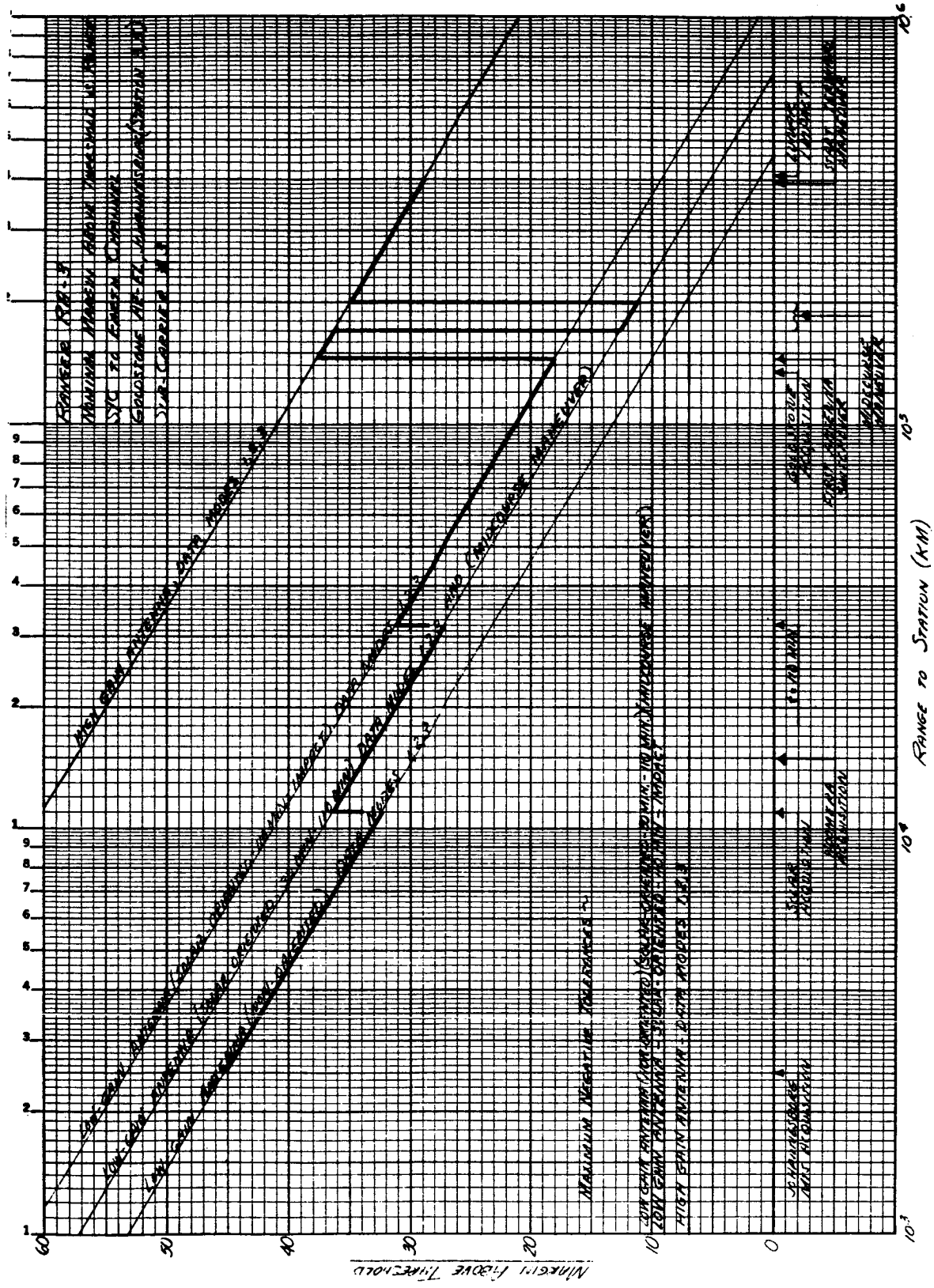
Range to Station (KM)
Margin Above Threshold
Maximum Negative Tolerances
High Gain Antenna, Data Modes 1,2,3
Low-Gain Antenna (Solar-Oriented) Data Modes 1,2,3 and (Midcourse Maneuver)
Low-Gain Antenna (Non-Oriented) Data Modes 1,2,3
High Gain Antenna - Data Modes 1,2,3
Johannesburg MSFN Acquisition
Goldstone Acquisition
Goldstone Acquisition
First Antenna Switchover
Midcourse Maneuver
Start Transmitter Warmup
Launch
Solar Acquisition
Moonrise Acquisition
Midcourse Maneuver
60
50
40
30
20
10
0
10^3
10^4
10^5
10^6

Figure 4.2-3g.

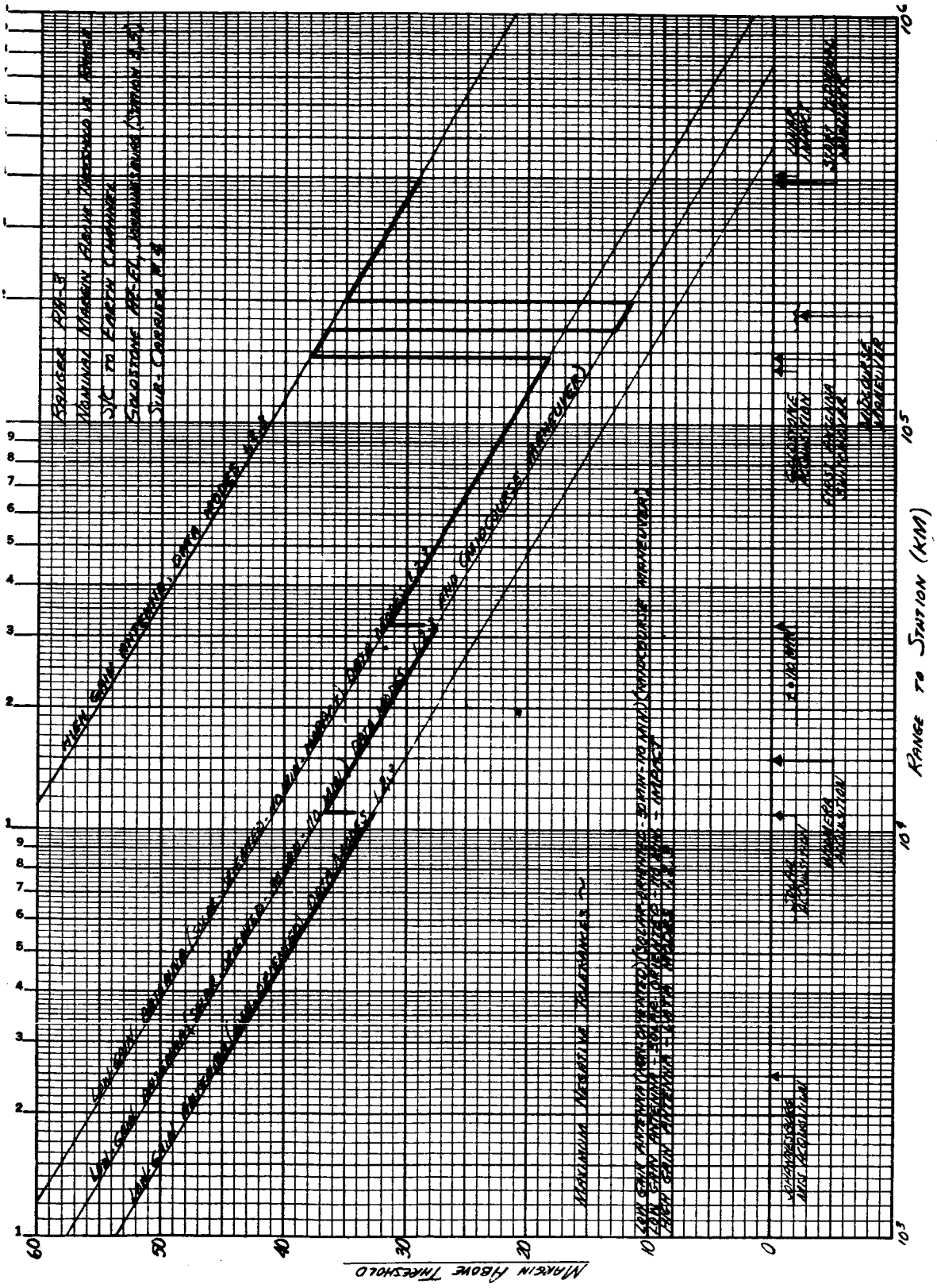

Figure 4.2-3h.

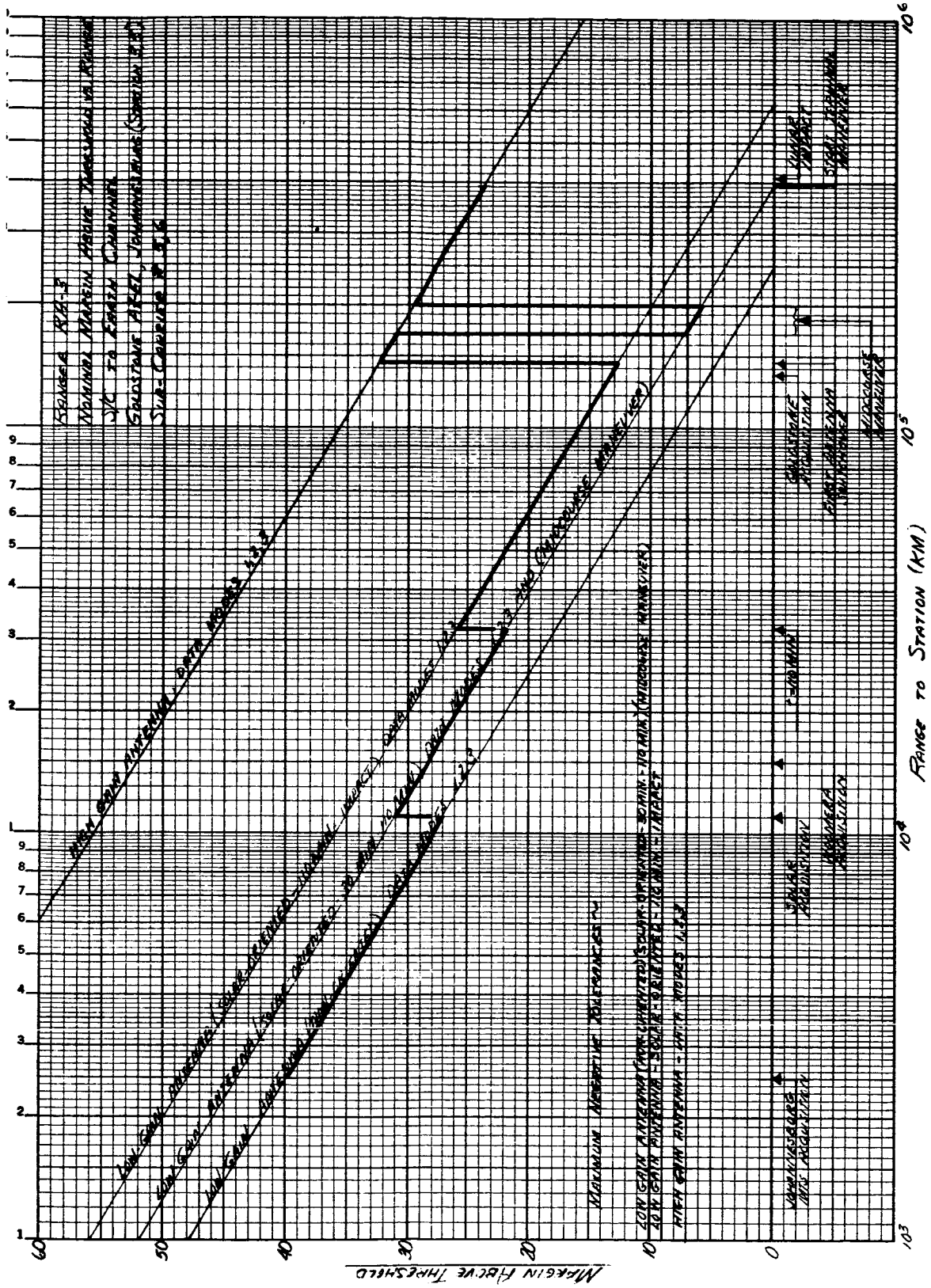
Range to Station (KM)
Margin Above Threshold
60
50
40
30
20
10
0
10^3
10^4
10^5
10^6

Figure 4.2-31.

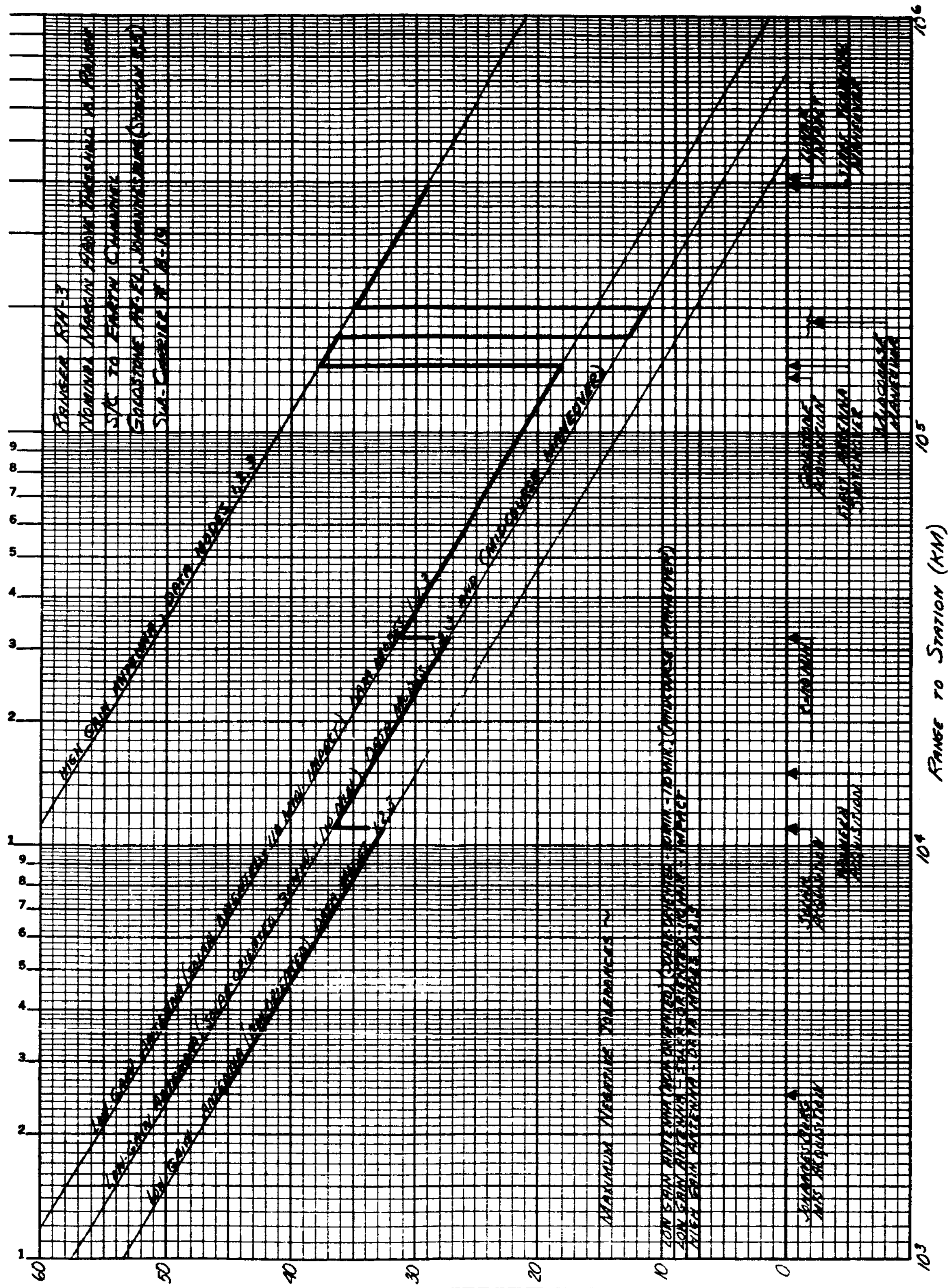

Figure 4.2-3j.

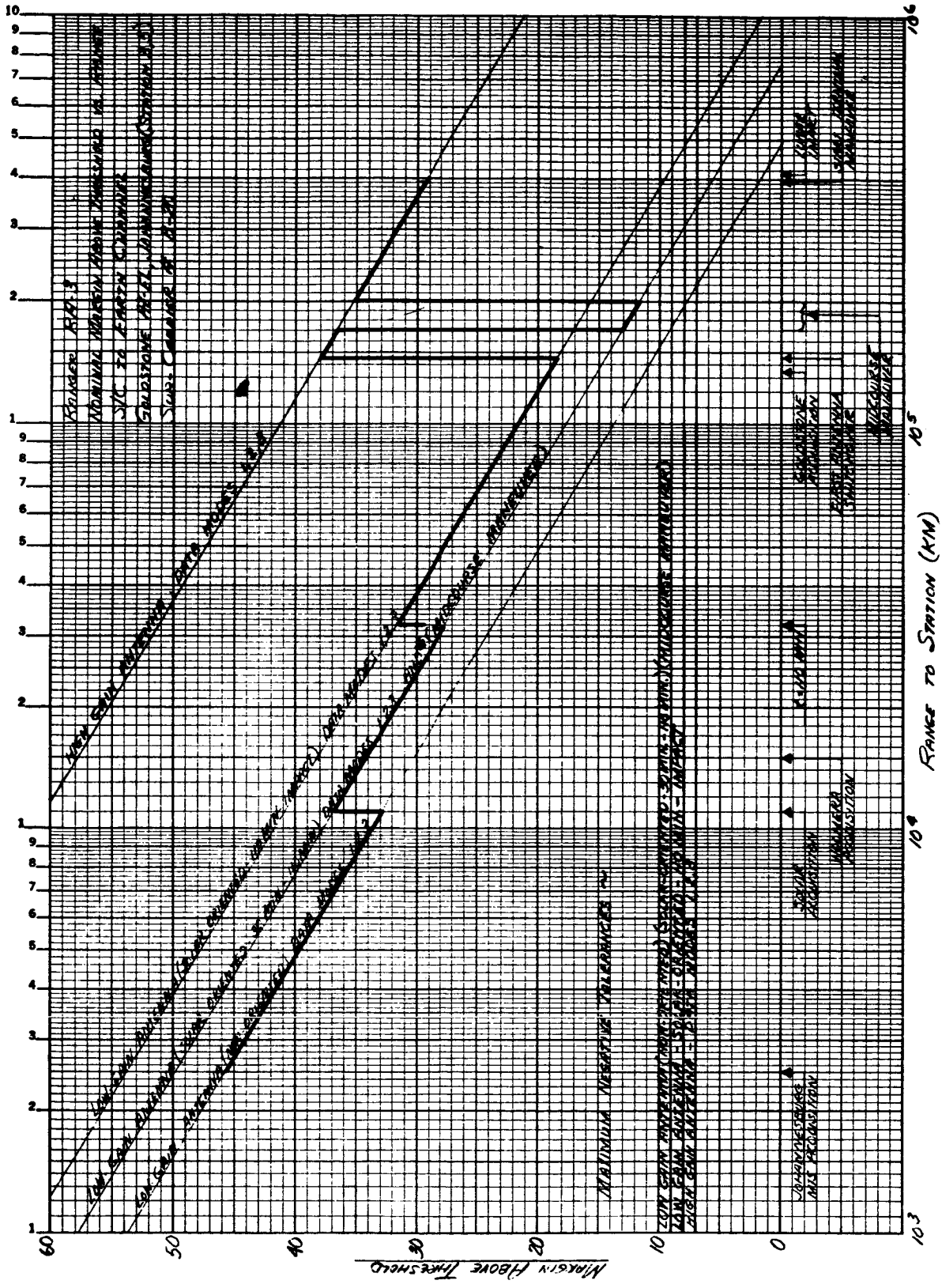
Range to Station (KM)
Margin Above Threshold
Maximum Negative Tolerances

Figure 4.2-3k.

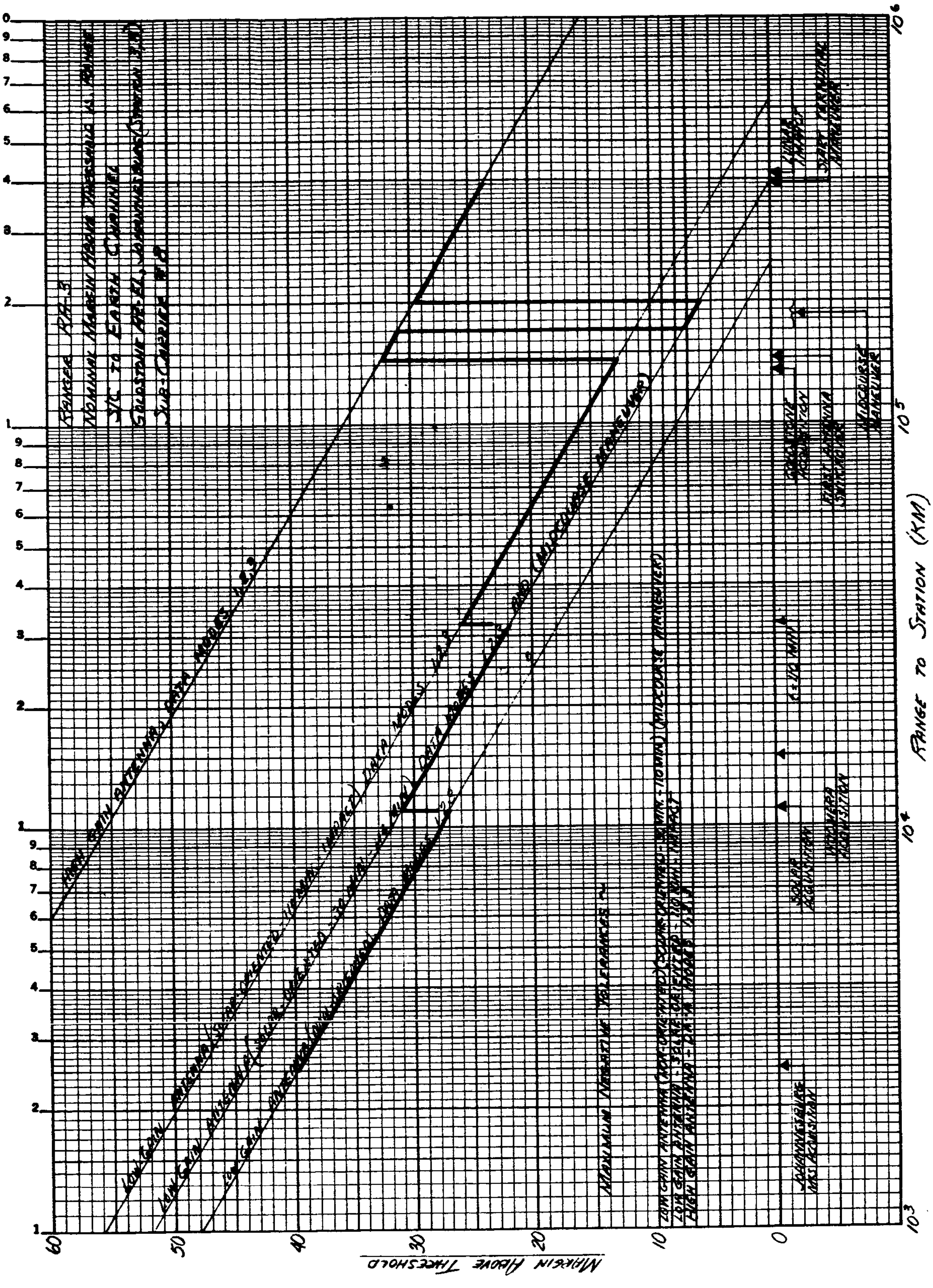

Figure 4.2-31.

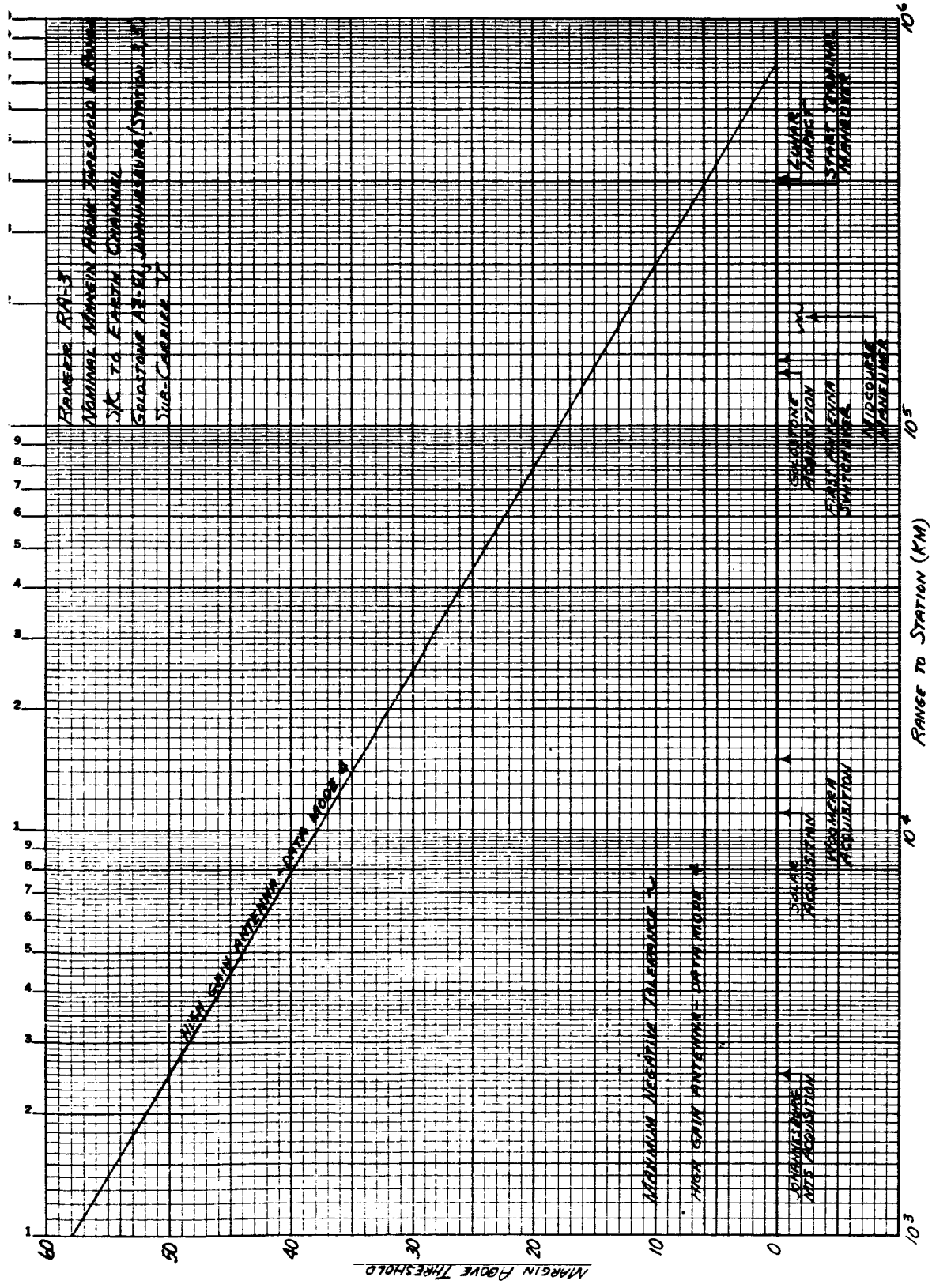
RANGER RA-3
NOMINAL MARGIN ABOVE THRESHOLD
S/C TO EARTH CHANNEL
GOLDSTONE AZ-EL, JOHANNESBURG (STATION 3,5)
SUB-CARRIER V
HIGH GAIN ANTENNA - DATA MODE 4
MAXIMUM NEGATIVE TOLERANCE
HIGH GAIN ANTENNA - DATA MODE 4
JOHANNESBURG MTS ACQUISITION
SOLAR ACQUISITION
WOOMERA ACQUISITION
GOLDSTONE ACQUISITION
FIRST ANTENNA SWITCHOVER
MIDCOURSE MANEUVER
LUNAR IMPACT
START TERMINAL MANEUVER
RANGE TO STATION (KM)
MARGIN ABOVE THRESHOLD
60
50
40
30
20
10
0
10^3
10^4
10^5
10^6

Figure 4.2-3m.

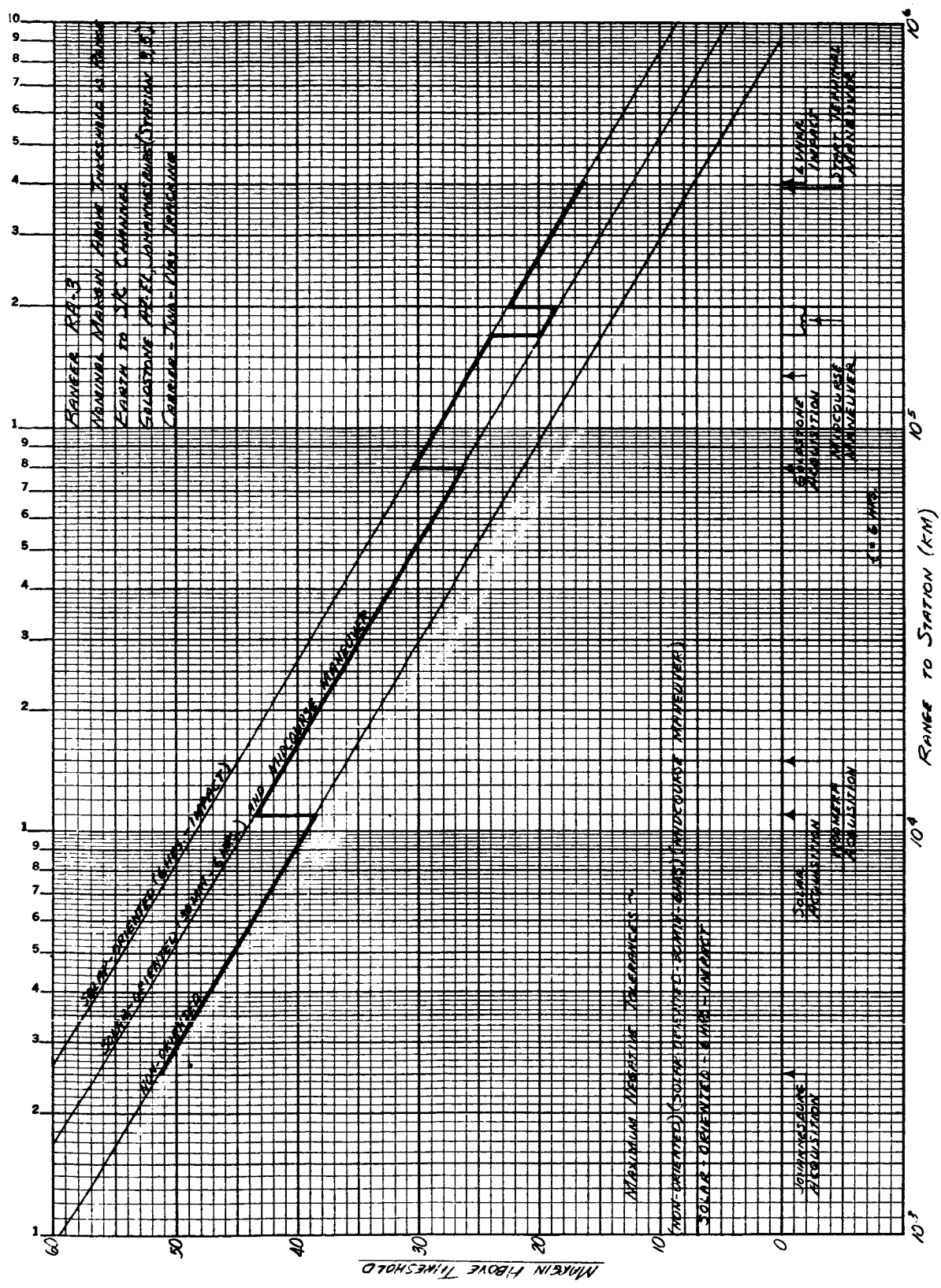
RANGER RA-3
NOMINAL MARGIN ABOVE THRESHOLD VS RANGE
EARTH TO S/C CHANNEL
GOLDSTONE AZ-EL, JOHANNESBURG (STATION 3,5)
CARRIER - TWO-WAY TRACKING
SOLAR-ORIENTED (6 HRS - IMPACT)
SOLAR-ORIENTED (30 MIN - 6 HRS) AND MIDCOURSE MANEUVER
NON-ORIENTED
MAXIMUM NEGATIVE TOLERANCES ~
(NON-ORIENTED) (SOLAR-ORIENTED - 30 MIN - 6 HRS) (MIDCOURSE MANEUVER)
SOLAR-ORIENTED - 6 HRS - IMPACT
JOHANNESBURG ACQUISITION
SOLAR ACQUISITION
MIDCOURSE ACQUISITION
GOLDSTONE ACQUISITION
MIDCOURSE MANEUVER
LUNAR IMPACT
START TERMINAL MANEUVER
(= 6 HRS.)
RANGE TO STATION (KM)
MARGIN ABOVE THRESHOLD
60
50
40
30
20
10
0
10^3
10^4
10^5
10^6

Figure 4.2-4a.

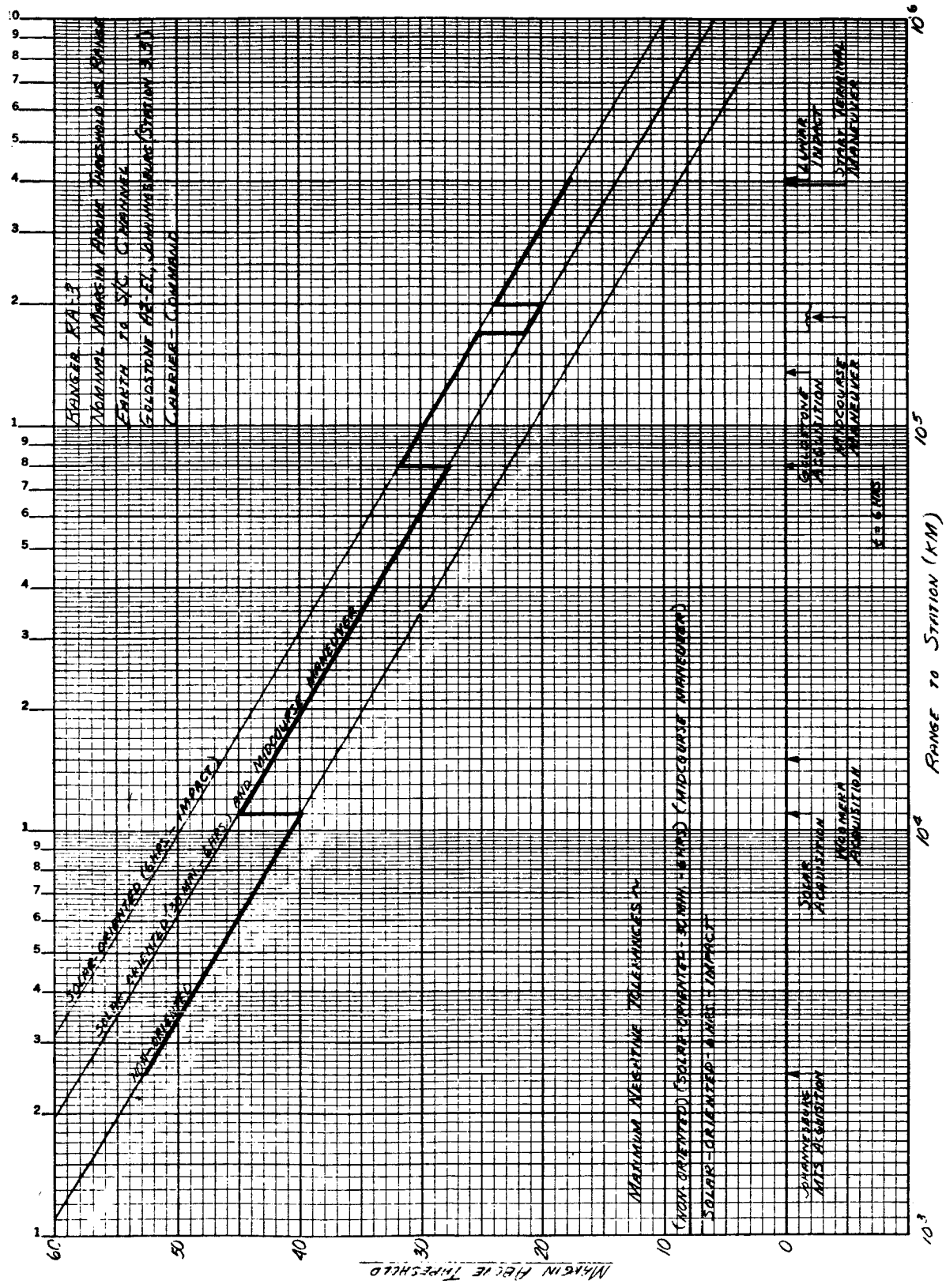
RANGER RA-3
NOMINAL MARGIN ABOVE THRESHOLD VS RANGE
EARTH TO S/C CHANNEL
GOLDSTONE AZ-EL, JOHANNESBURG (STATION 3.5)
CARRIER-COMMAND
SOLAR-ORIENTED (6 HRS - IMPACT)
SOLAR-ORIENTED (30 MIN - 6 HRS) AND MIDCOURSE MANEUVER
NON-ORIENTED
MAXIMUM NEGATIVE TOLERANCES ~
(NON-ORIENTED) (SOLAR-ORIENTED - 30 MIN - 6 HRS) (MIDCOURSE MANEUVER)
SOLAR-ORIENTED - 6 HRS - IMPACT
JOHANNESBURG MTS ACQUISITION
SOLAR ACQUISITION
WOOMERA ACQUISITION
GOLDSTONE ACQUISITION
MIDCOURSE MANEUVER
LUNAR IMPACT
START TERMINAL MANEUVER
RANGE TO STATION (KM)
MARGIN ABOVE THRESHOLD

Figure 4.2-4b.

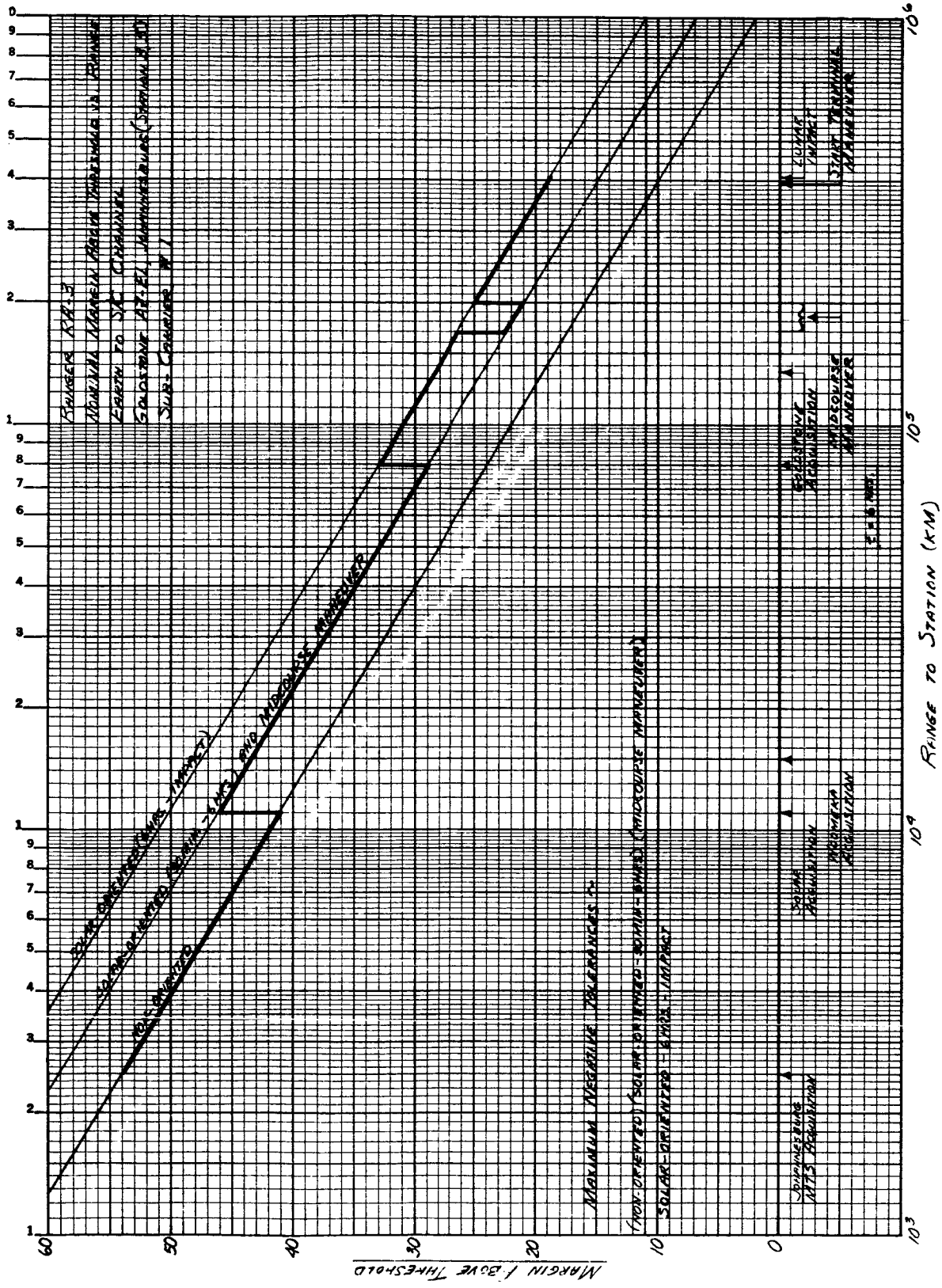
RANGER RA-3
NOMINAL MARGIN ABOVE THRESHOLD VS RANGE
EARTH TO SC CHANNEL
GOLDSTONE AZ-EL, JOHANNESBURG (STATION B.30)
SUB-CARRIER #1
SOLAR-ORIENTED (6 HRS - IMPACT)
SOLAR-ORIENTED (30 MIN - 6 HRS) AND MIDCOURSE MANEUVER
NON-ORIENTED
MAXIMUM NEGATIVE TOLERANCES ~
(NON-ORIENTED) (SOLAR-ORIENTED - 30 MIN - 6 HRS) (MIDCOURSE MANEUVER)
SOLAR-ORIENTED - 6 HRS - IMPACT
JOHANNESBURG MTS ACQUISITION
SOLAR ACQUISITION
MOOMERA ACQUISITION
GOLDSTONE ACQUISITION
MIDCOURSE MANEUVER
LUNAR IMPACT
START TERMINAL MANEUVER
RANGE TO STATION (KM)
MARGIN ABOVE THRESHOLD

Figure 4.2-4c.

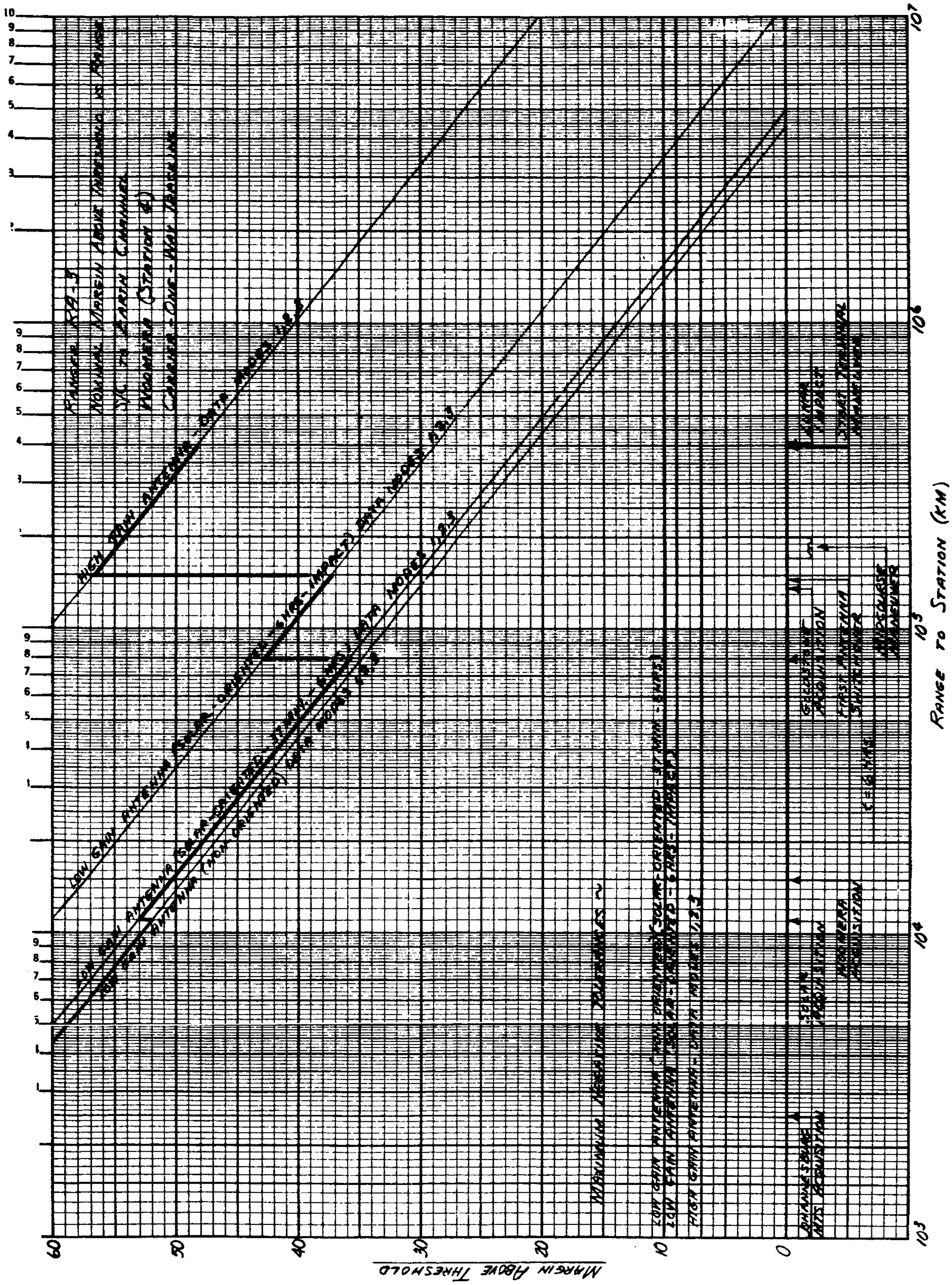

Figure 4.2-5a.

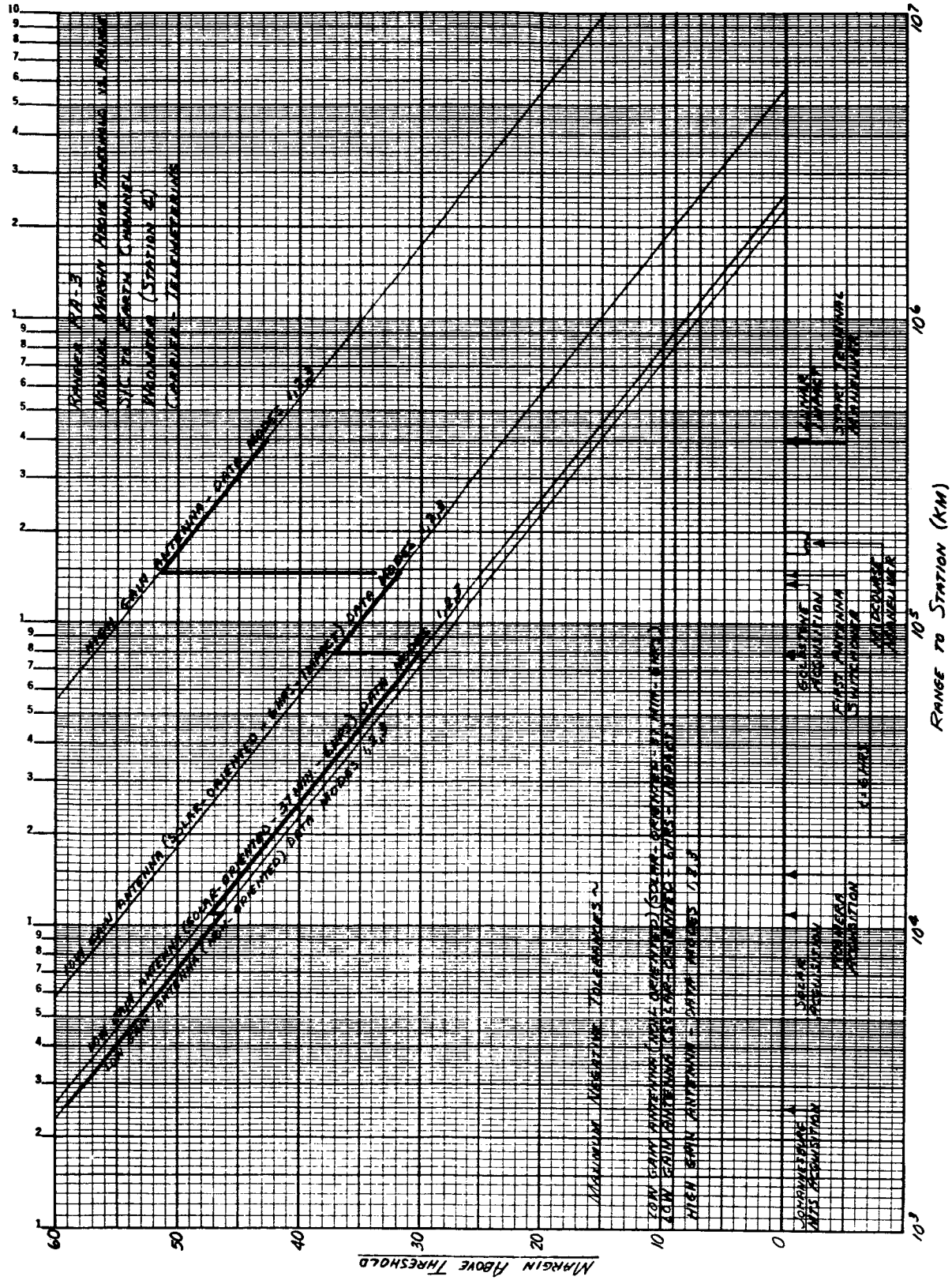
Range to Station (KM)
Margin Above Threshold
Maximum Negative Tolerances ~
Johannesburg MTS Acquisition
Solar Acquisition
Mojave Acquisition
Goldstone Acquisition
First Antenna Switchover
Midcourse Maneuver
Solar Impact
Start Terminal Maneuver
Range RA-3
Nominal Margin Above Threshold vs Range
S/C to Earth Channel
Woomera (Station 4)
Carrier - Telemetering
High Gain Antenna - Data Modes 1,2,3
Low Gain Antenna (Solar-Oriented - 6 hrs - Impact) Data Modes 1,2,3
Low Gain Antenna (Solar-Oriented - 37 min - 6 hrs) Data Modes 1,2,3
Low Gain Antenna (Non-Oriented) Data Modes 1,2,3
Low Gain Antenna (Non-Oriented) Data Modes 1,2,3
Low Gain Antenna (Solar-Oriented - 37 min - 6 hrs) Data Modes 1,2,3
Low Gain Antenna (Solar-Oriented - 6 hrs - Impact) Data Modes 1,2,3
High Gain Antenna - Data Modes 1,2,3

Figure 4.2-5b.

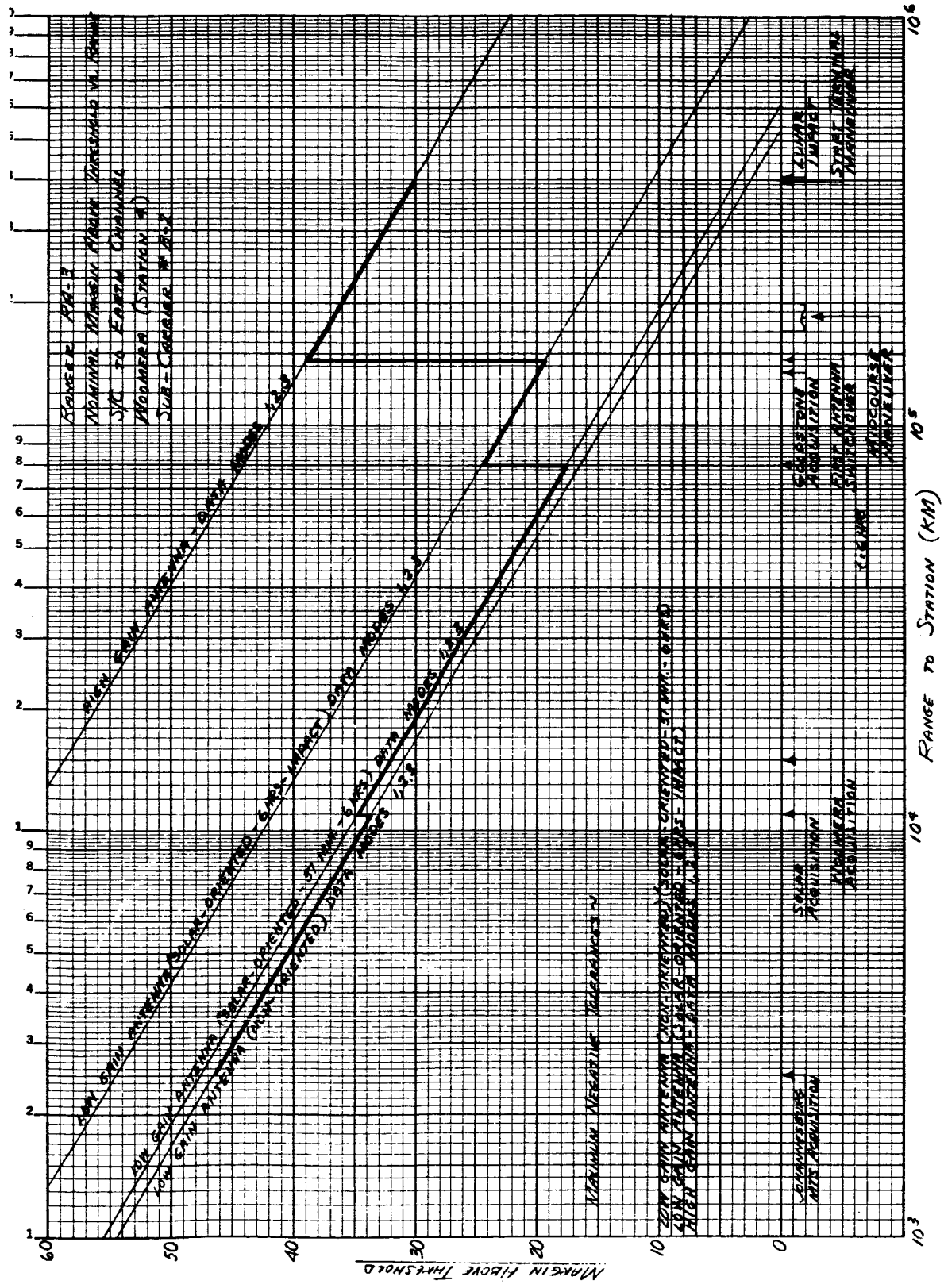
RANGER RA-3
NOMINAL MARGIN ABOVE THRESHOLD VS. RANGE
S/C TO EARTH CHANNEL
WOOMERA (STATION 4)
SUB-CARRIER # B-2
HIGH GAIN ANTENNA - DATA MODES 1,2,3
LOW GAIN ANTENNA (SOLAR-ORIENTED - 6 HRS - IMPACT) DATA MODES 1,2,3
LOW GAIN ANTENNA (SOLAR-ORIENTED - 57 MIN - 6 HRS) DATA MODES 1,2,3
LOW GAIN ANTENNA (NON-ORIENTED) DATA MODES 1,2,3
MAXIMUM NEGATIVE TOLERANCES ~
LOW GAIN ANTENNA (NON-ORIENTED) (SOLAR-ORIENTED - 57 MIN - 6 HRS)
LOW GAIN ANTENNA (SOLAR-ORIENTED - 6 HRS - IMPACT)
HIGH GAIN ANTENNA - DATA MODES 1,2,3
JOHANNESBURG MTS ACQUISITION
SOLAR ACQUISITION
WOOMERA ACQUISITION
GOLDSTONE ACQUISITION
FIRST ANTENNA SWITCHOVER
MIDCOURSE MANEUVER
LUNAR IMPACT
START TERMINAL MANEUVER
RANGE TO STATION (KM)
MARGIN ABOVE THRESHOLD
60
50
40
30
20
10
0
10^3
10^4
10^5
10^6

Figure 4.2-5c.

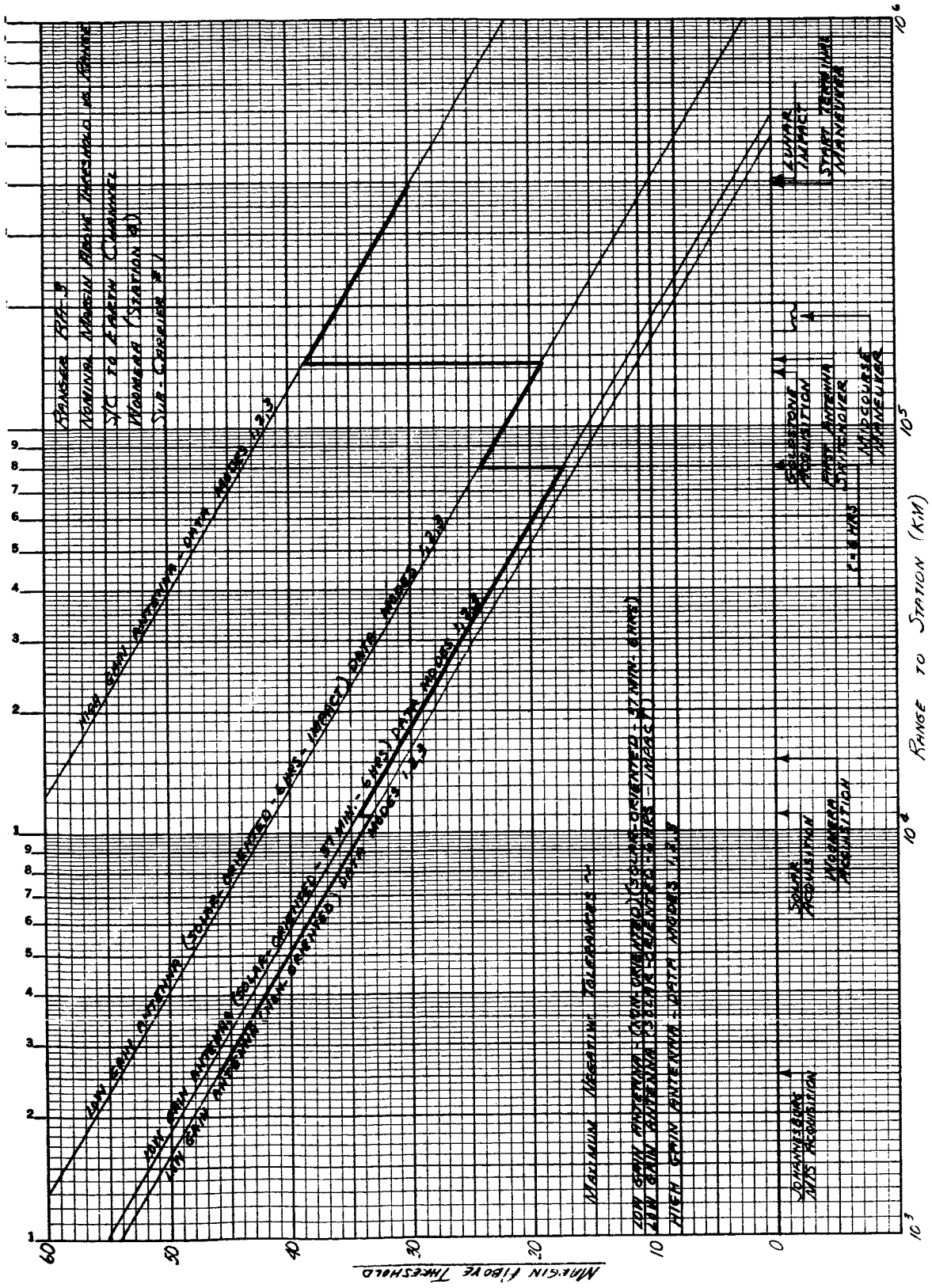
RANGE RA-3
NOMINAL MARGIN ABOVE THRESHOLD VS RANGE
S/C TO EARTH CHANNEL
WOOMERA (STATION 4)
SUB-CARRIER #1
HIGH GAIN ANTENNA - DATA MODES 1,2,3
LOW GAIN ANTENNA (SOLAR-ORIENTED - 6 HRS - IMPACT) DATA MODES 1,2,3
LOW GAIN ANTENNA (SOLAR-ORIENTED - 37 MIN - 6 HRS) DATA MODES 1,2,3
LOW GAIN ANTENNA (NON-ORIENTED) DATA MODES 1,2,3
MAXIMUM NEGATIVE TOLERANCES ~
LOW GAIN ANTENNA (NON-ORIENTED) (SOLAR-ORIENTED - 37 MIN - 6 HRS)
LOW GAIN ANTENNA (SOLAR-ORIENTED - 6 HRS - IMPACT)
HIGH GAIN ANTENNA - DATA MODES 1,2,3
JOHANNESBURG MTS ACQUISITION
SOLAR ACQUISITION
WOOMERA ACQUISITION
GOLDSTONE ACQUISITION
FIRST ANTENNA SWITCHOVER
MIDCOURSE MANEUVER
LUNAR IMPACT
START TERMINAL MANEUVER
RANGE TO STATION (KM)
MARGIN ABOVE THRESHOLD

Figure 4.2-5d.

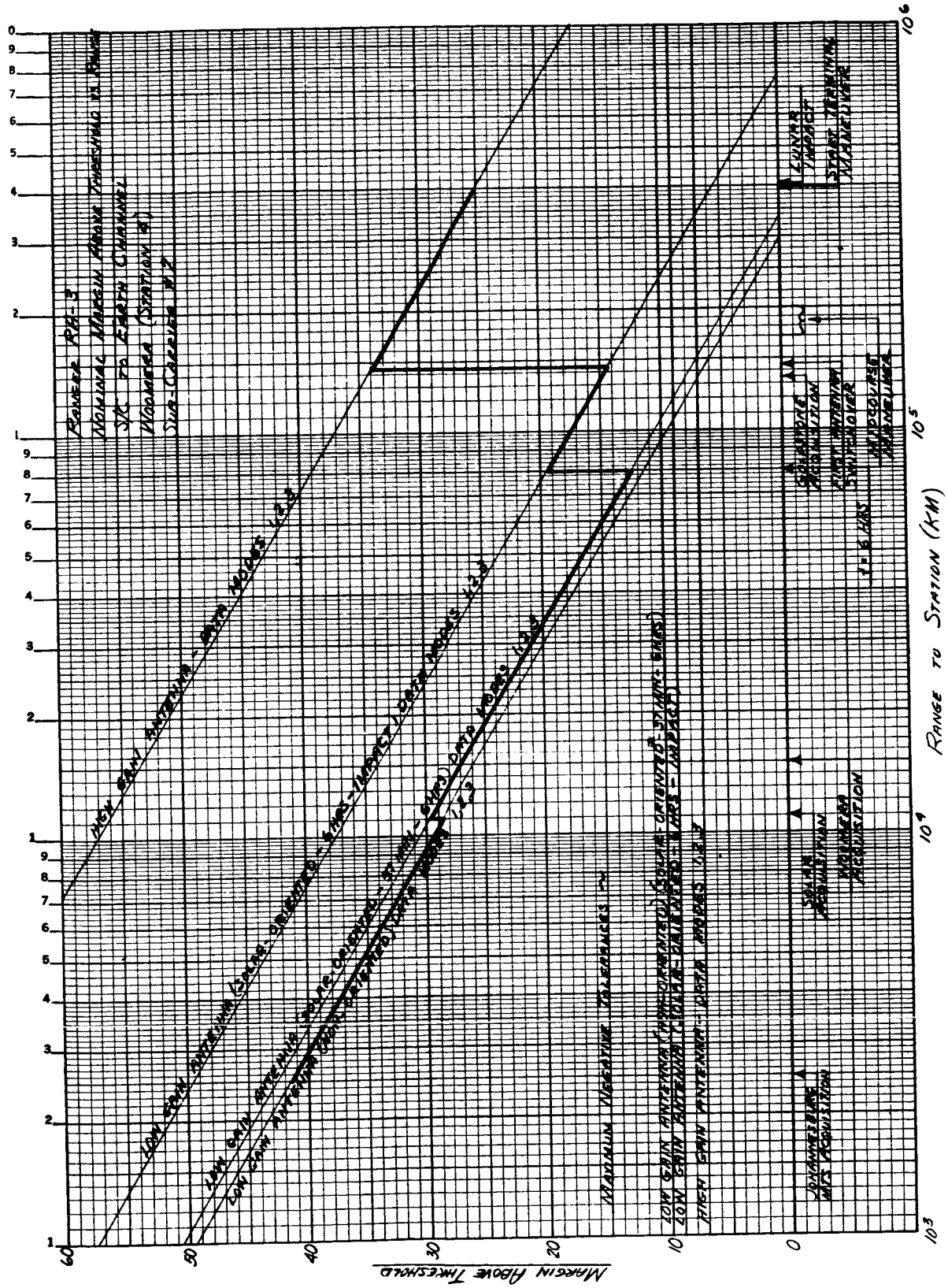
Range to Station (KM)
Margin Above Threshold
Maximum Negative Tolerances
Lunar Impact
Start Terminal Maneuver
Goldstone Acquisition
First Antenna Switchover
Mid-Course Maneuver
Solar Acquisition
Woomera Acquisition
Johannesburg MTS Acquisition
High Gain Antenna - Data Modes 1,2,3
Low Gain Antenna (Solar-Oriented - 6 Hrs - Impact) Data Modes 1,2,3
Low Gain Antenna (Solar-Oriented - 57 Min - 6 Hrs) Data Modes 1,2,3
Low Gain Antenna (Non-Oriented) Data Modes 1,2,3
Low Gain Antenna (Solar-Oriented - 57 Min - 6 Hrs) Data Modes 1,2,3
High Gain Antenna - Data Modes 1,2,3

Figure 4.2-5e.

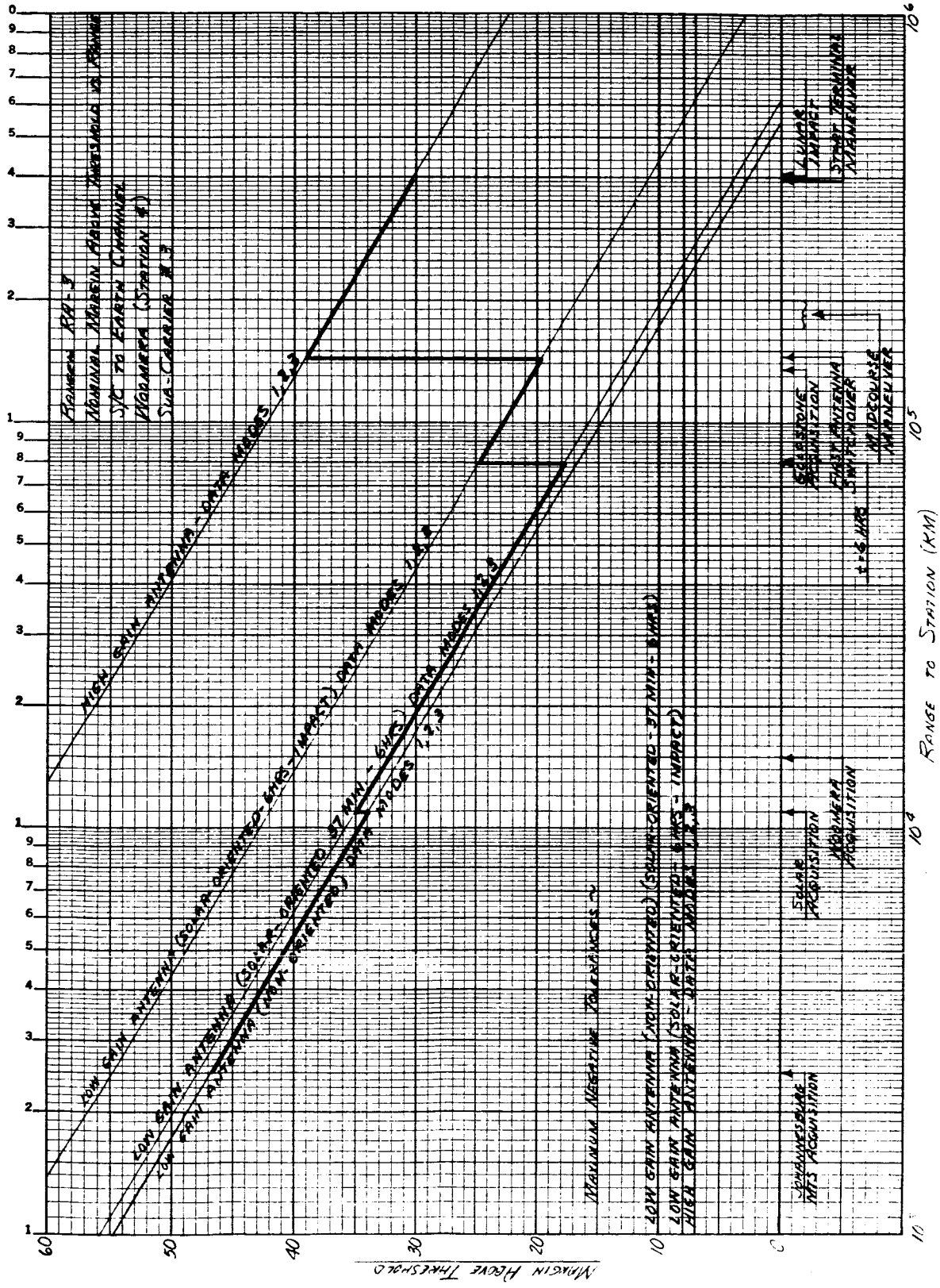
RANGER RA-3
NOMINAL MARGIN ABOVE THRESHOLD VS RANGE
S/C TO EARTH CHANNEL
WOOMERA (STATION 4)
SUB-CARRIER #3
HIGH GAIN ANTENNA - DATA MODES 1,2,3
LOW GAIN ANTENNA (SOLAR-ORIENTED-6HRS-IMPACT) DATA MODES 1,2,3
LOW GAIN ANTENNA (SOLAR-ORIENTED 37 MIN. - 6HRS) DATA MODES 1,2,3
LOW GAIN ANTENNA (NON-ORIENTED) DATA MODES 1,2,3
MAXIMUM NEGATIVE TOLERANCES ~
LOW GAIN ANTENNA (NON-ORIENTED) (SOLAR-ORIENTED - 37 MIN - 6HRS)
LOW GAIN ANTENNA (SOLAR-ORIENTED - 6HRS - IMPACT)
HIGH GAIN ANTENNA - DATA MODES 1,2,3
JOHANNESBURG MTS ACQUISITION
SOLAR ACQUISITION
WOOMERA ACQUISITION
GOLDSTONE ACQUISITION
FIRST ANTENNA SWITCHOVER
MIDCOURSE MANEUVER
LUNAR IMPACT
START TERMINAL MANEUVER
t=6 HRS
RANGE TO STATION (KM)
MARGIN ABOVE THRESHOLD

Figure 4.2-5f.

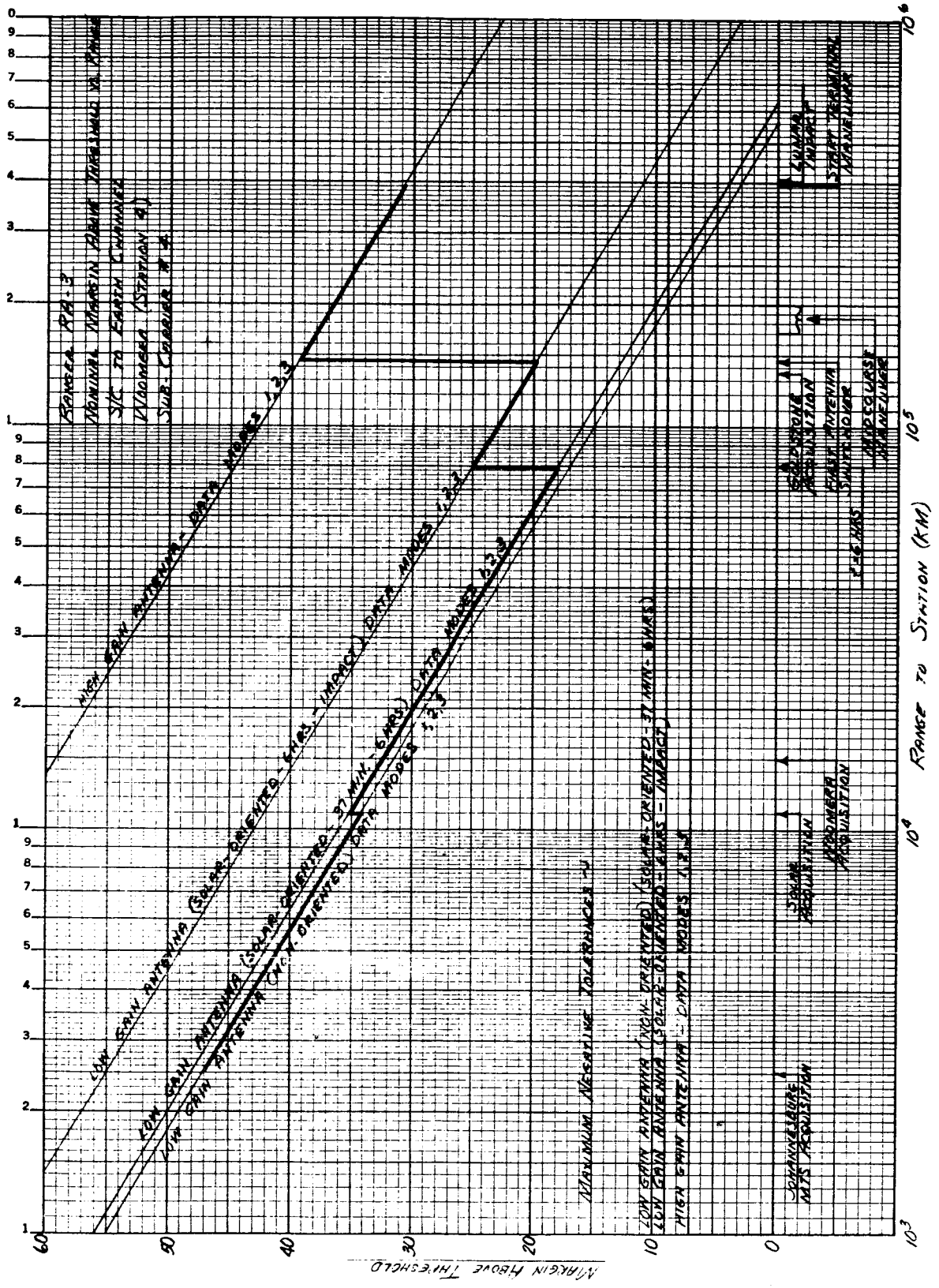
RANGER RA-3
NOMINAL MARGIN ABOVE THRESHOLD VS. RANGE
S/C TO EARTH CHANNEL
WOOMERA (STATION 4)
SUB-CARRIER # 4
HIGH GAIN ANTENNA - DATA MODES 1,2,3
LOW GAIN ANTENNA (SOLAR-ORIENTED - 6 HRS. - IMPACT) DATA MODES 1,2,3
LOW GAIN ANTENNA (SOLAR-ORIENTED - 37 MIN. - 6 HRS.) DATA MODES 1,2,3
LOW GAIN ANTENNA (NON-ORIENTED) DATA MODES 1,2,3
MAXIMUM NEGATIVE TOLERANCES
LOW GAIN ANTENNA (NON-ORIENTED) (SOLAR-ORIENTED - 37 MIN. - 6 HRS.)
LOW GAIN ANTENNA (SOLAR-ORIENTED - 6 HRS. - IMPACT)
HIGH GAIN ANTENNA - DATA MODES 1,2,3
JOHANNESBURG MTS ACQUISITION
SOLAR ACQUISITION
WOOMERA ACQUISITION
GOLDSTONE ACQUISITION
FIRST ANTENNA SWITCHOVER
MIDCOURSE MANEUVER
LUNAR IMPACT
START TERMINAL MANEUVER
RANGE TO STATION (KM)
MARGIN ABOVE THRESHOLD

Figure 4.2-5g.

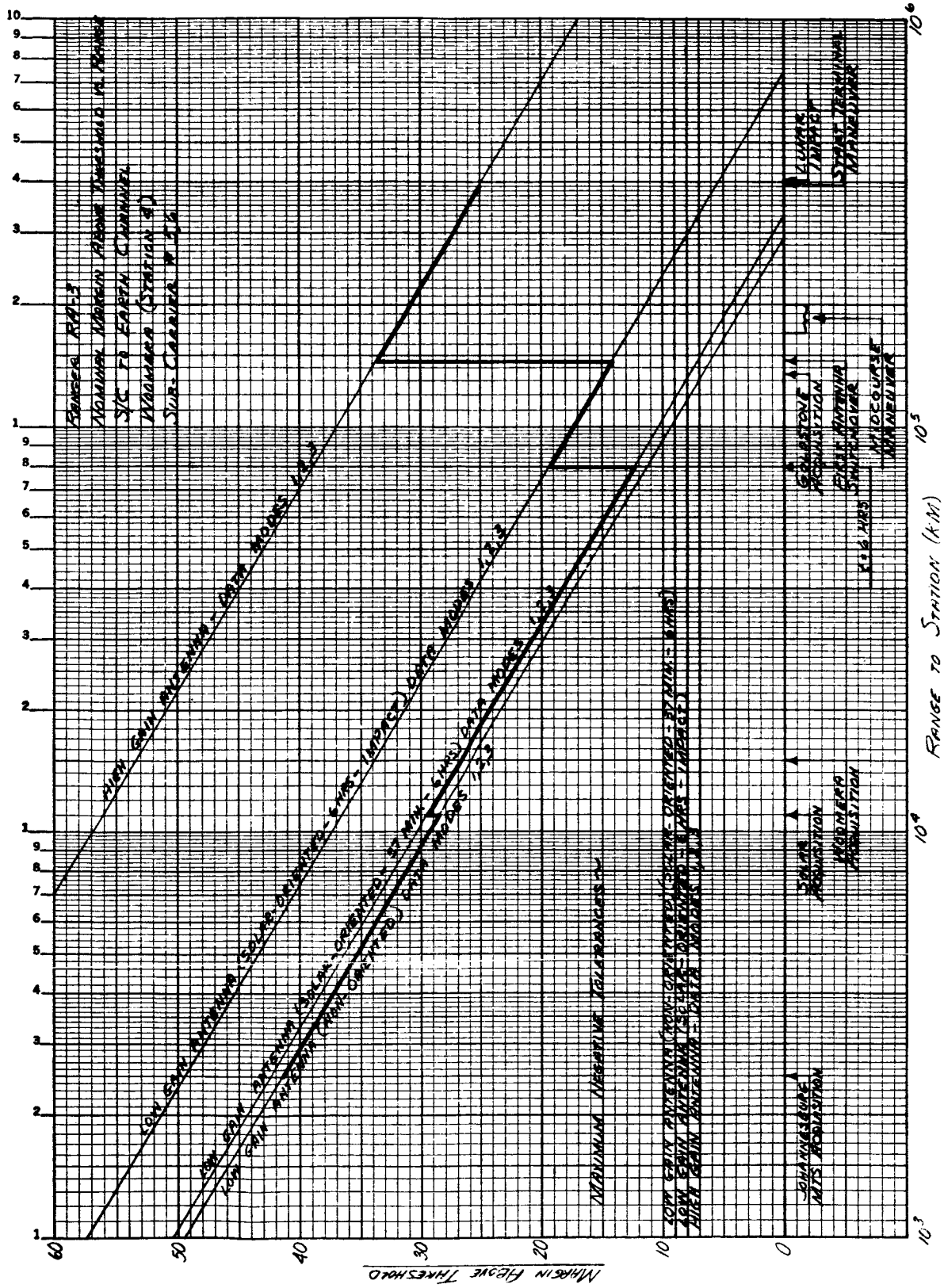
RANGER RA-3
NOMINAL MARGIN ABOVE THRESHOLD VS. RANGE
S/C TO EARTH CHANNEL
WOOMERA (STATION 4)
SUB-CARRIER # 5,6
HIGH GAIN ANTENNA - DATA MODES 1,2,3
LOW GAIN ANTENNA (SOLAR-ORIENTED - 6 HRS - IMPACT) DATA MODES 1,2,3
LOW GAIN ANTENNA (SOLAR-ORIENTED - 37 MIN - 6 HRS) DATA MODES 1,2,3
LOW GAIN ANTENNA (NON-ORIENTED) DATA MODES 1,2,3
MAXIMUM NEGATIVE TOLERANCES
LOW GAIN ANTENNA (NON-ORIENTED) (SOLAR-ORIENTED - 37 MIN - 6 HRS)
LOW GAIN ANTENNA (SOLAR-ORIENTED - 6 HRS - IMPACT)
HIGH GAIN ANTENNA - DATA MODES 1,2,3
LUNAR IMPACT
START TERMINAL MANEUVER
GOLDSTONE ACQUISITION
FIRST ANTENNA SWITCHOVER
MIDCOURSE MANEUVER
6 HRS
SOLAR ACQUISITION
WOOMERA ACQUISITION
JOHANNESBURG MTS ACQUISITION
RANGE TO STATION (KM)
MARGIN ABOVE THRESHOLD

Figure 4.2-5h.

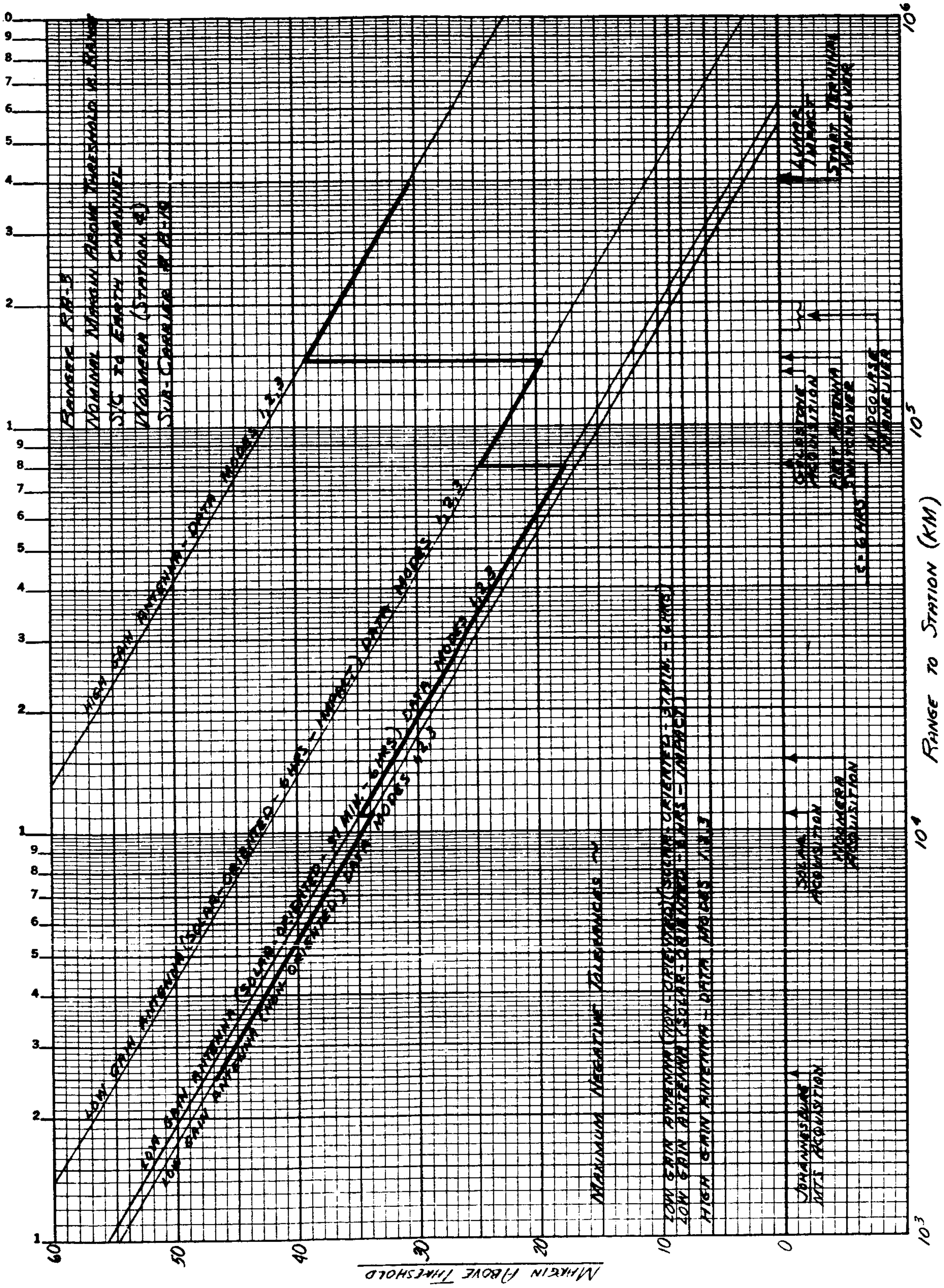
RANGE TO STATION (KM)
MARGIN ABOVE THRESHOLD
HIGH GAIN ANTENNA - DATA MODES 1,2,3
MAXIMUM NEGATIVE TOLERANCES
JOHANNESBURG MTI ACQUISITION
WOOMERA ACQUISITION
SOLAR ACQUISITION

Figure 4.2-51.

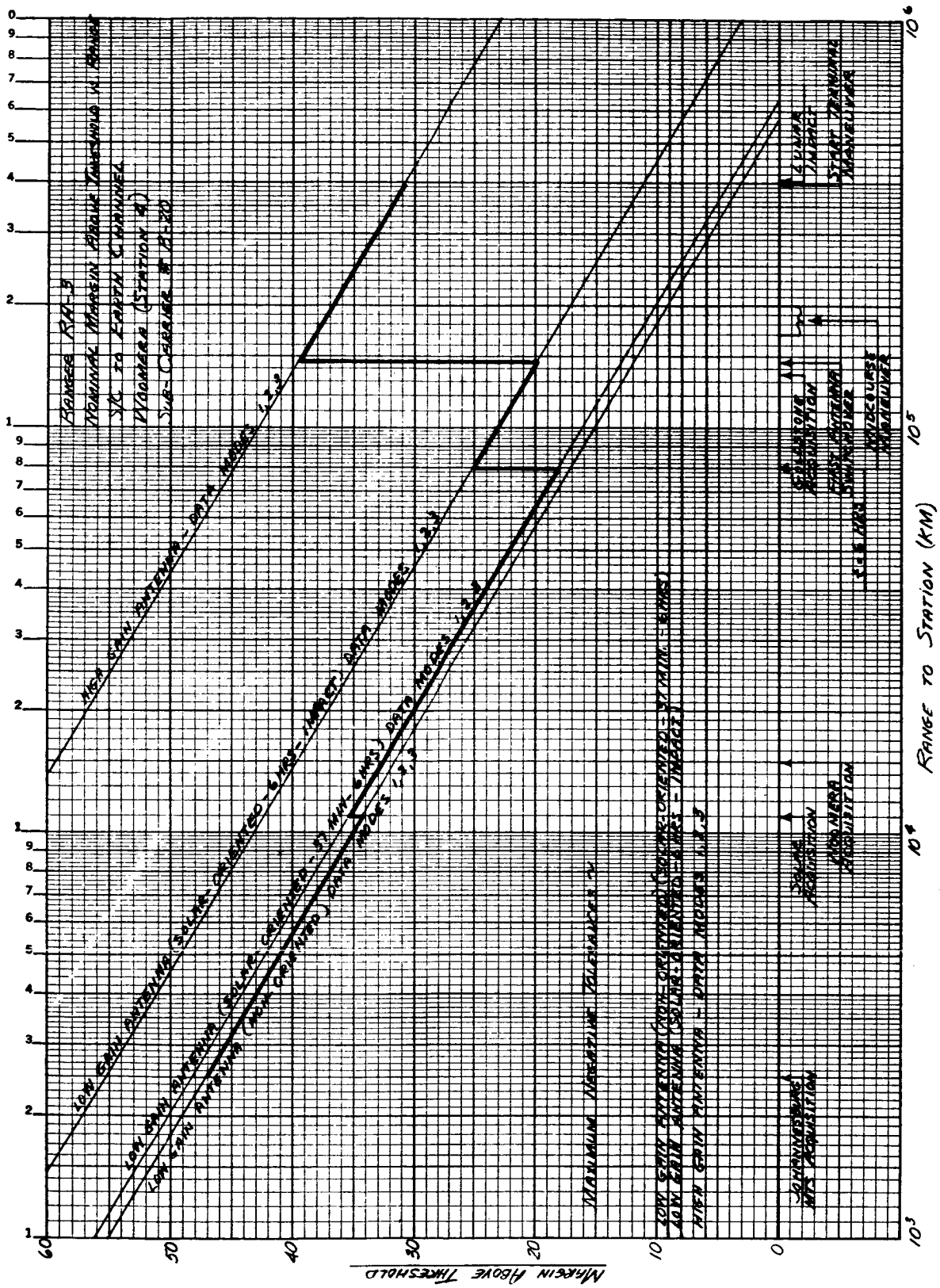
RANGER RA-3
NOMINAL MARGIN ABOVE THRESHOLD VS RANGE
S/C TO EARTH CHANNEL
WOOMERA (STATION 4)
SUB-CARRIER # B-20
HIGH GAIN ANTENNA - DATA MODES 1,2,3
LOW GAIN ANTENNA (SOLAR-ORIENTED-6 HRS-IMPACT) DATA MODES 1,2,3
LOW GAIN ANTENNA (SOLAR-ORIENTED-57 MIN-6 HRS) DATA MODES 1,2,3
LOW GAIN ANTENNA (NON-ORIENTED) DATA MODES 1,2,3
MAXIMUM NEGATIVE TOLERANCES ~
LOW GAIN ANTENNA (NON-ORIENTED) (SOLAR-ORIENTED-57 MIN.-6 HRS)
LOW GAIN ANTENNA (SOLAR-ORIENTED-6 HRS-IMPACT)
HIGH GAIN ANTENNA - DATA MODES 1,2,3
JOHANNESBURG MTS ACQUISITION
SOLAR ACQUISITION
WOOMERA ACQUISITION
GOLDSTONE ACQUISITION
FAST ANTENNA SWITCHOVER
MIDCOURSE MANEUVER
LUNAR IMPACT
START TERMINAL MANEUVER
RANGE TO STATION (KM)
MARGIN ABOVE THRESHOLD

Figure 4.2-5j.

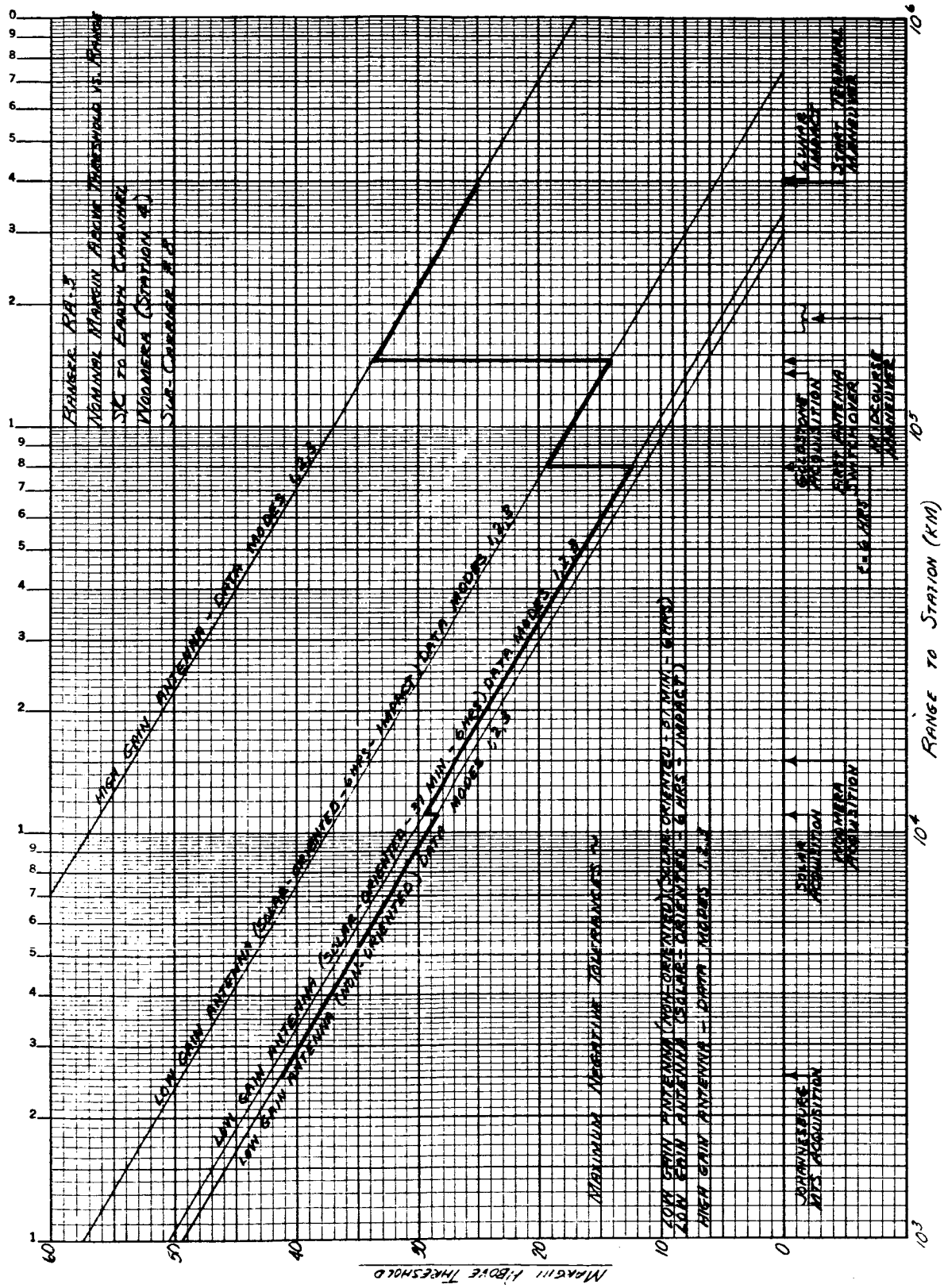
RANGER RA-3
NOMINAL MARGIN ABOVE THRESHOLD VS. RANGE
SK TO EARTH CHANNEL
WOOMERA (STATION 4)
SUB-CARRIER #8
HIGH GAIN ANTENNA - DATA MODES 1,2,3
LOW GAIN ANTENNA (SOLAR-ORIENTED - 6 HRS - IMPACT) DATA MODES 1,2,3
LOW GAIN ANTENNA (SOLAR-ORIENTED - 31 MIN - 6 HRS) DATA MODES 1,2,3
LOW GAIN ANTENNA (NON-ORIENTED) DATA MODES 1,2,3
MAXIMUM NEGATIVE TOLERANCES
LOW GAIN ANTENNA (NON-ORIENTED) (SOLAR-ORIENTED - 31 MIN - 6 HRS)
LOW GAIN ANTENNA (SOLAR-ORIENTED - 6 HRS - IMPACT)
HIGH GAIN ANTENNA - DATA MODES 1,2,3
JOHANNESBURG MTS ACQUISITION
SOLAR ACQUISITION
WOOMERA ACQUISITION
GOLDSTONE ACQUISITION
FIRST ANTENNA SWITCHOVER
MIDCOURSE MANEUVER
LUNAR IMPACT
START TERMINAL MANEUVER
RANGE TO STATION (KM)
MARGIN ABOVE THRESHOLD

Figure 4.2-5k.

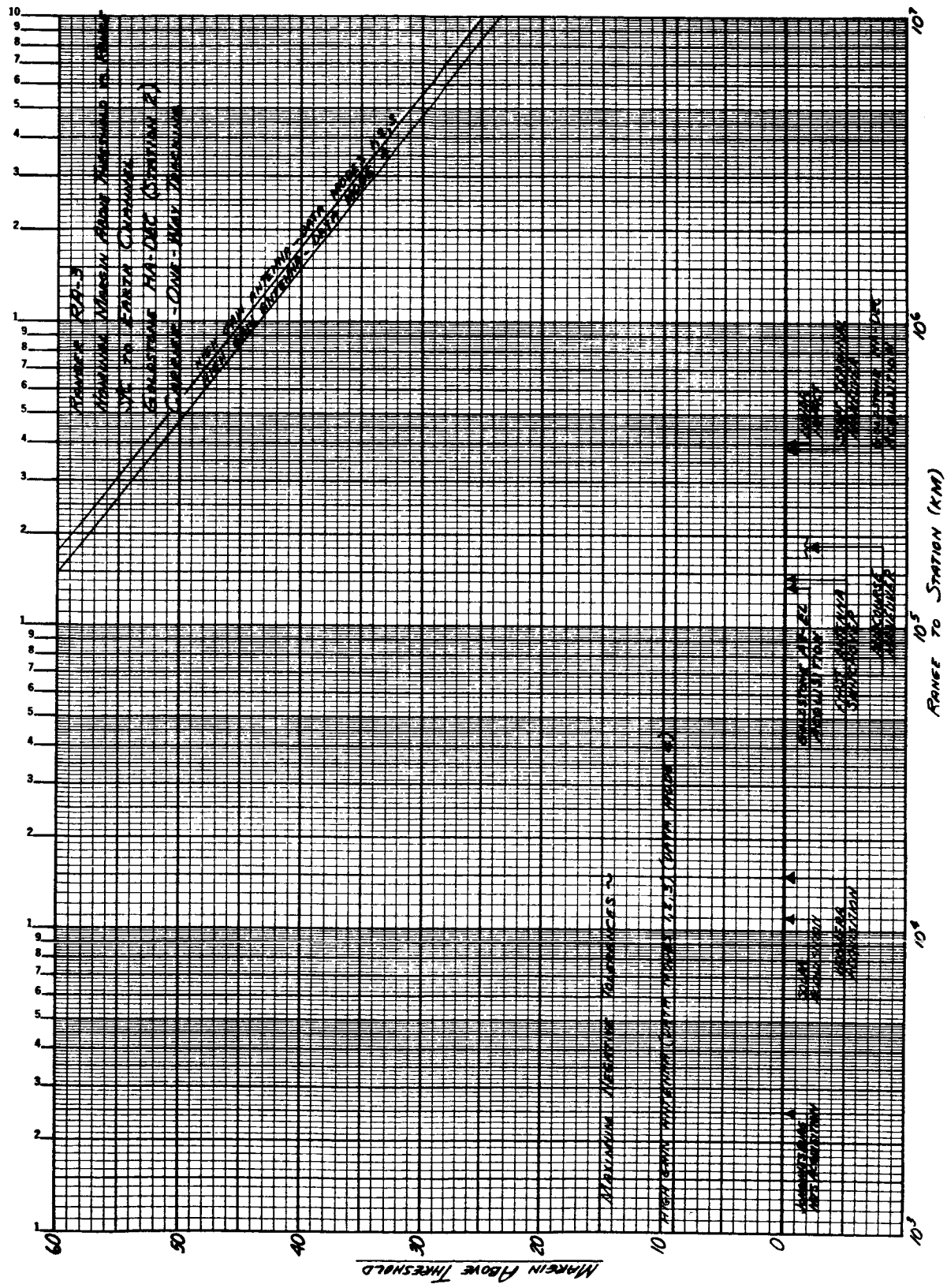

Figure 4.2-6a.

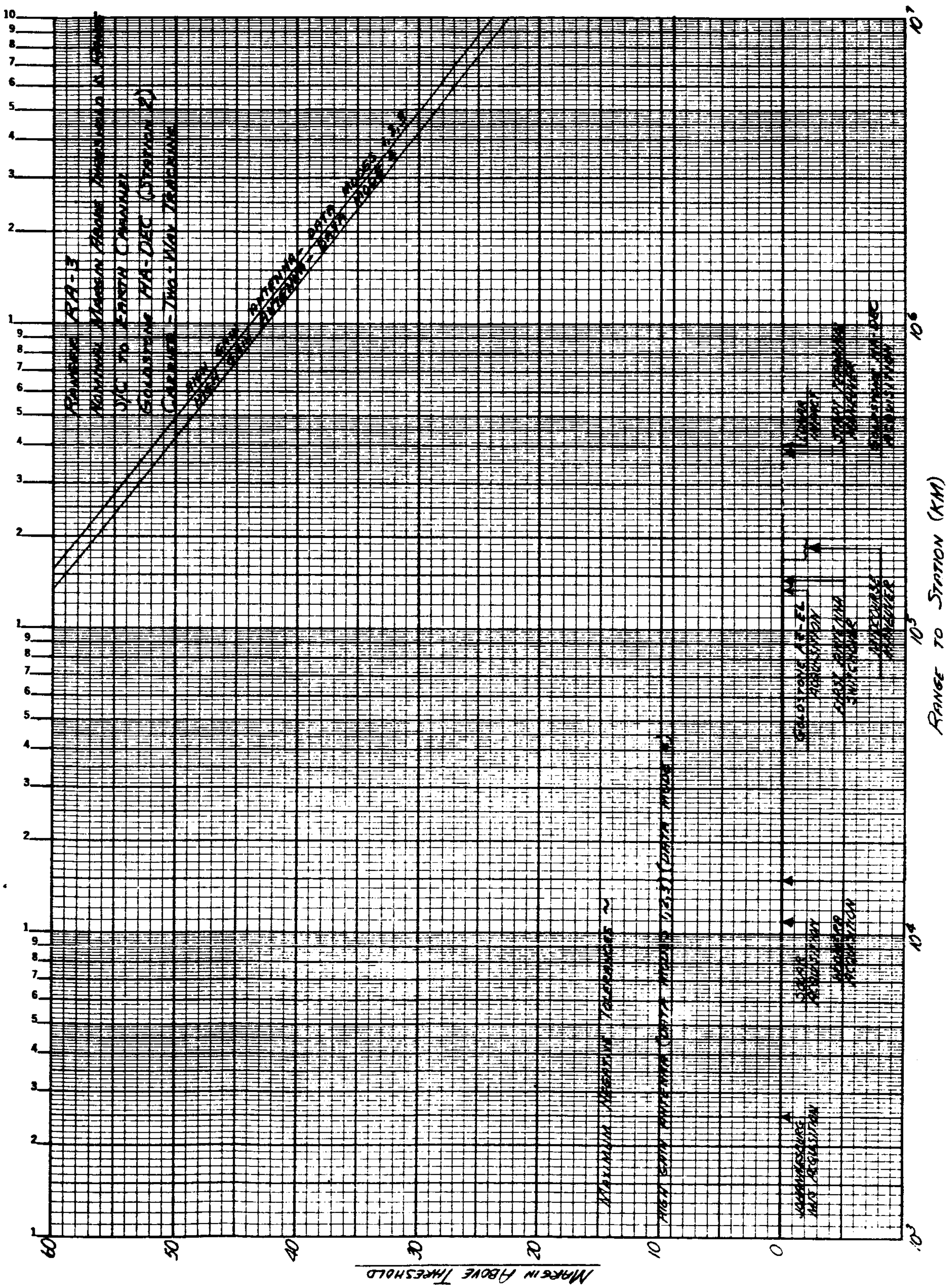
Ranger RA-3
S/C to Earth Channel
Goldstone HA-DEC (Station 2)
Range to Station (KM)
Margin Above Threshold

Figure 4.2-6b.

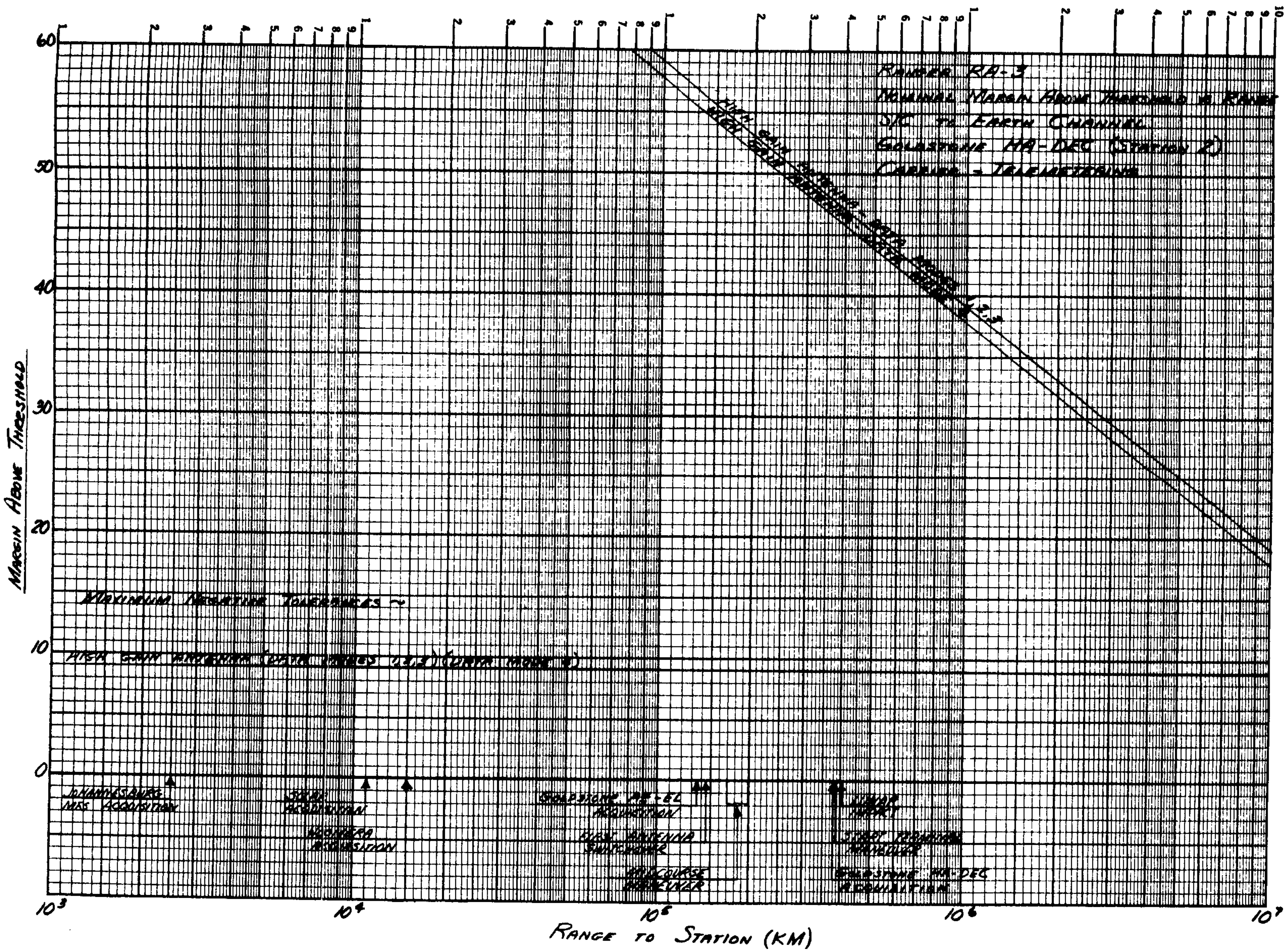
Ranger RA-3
Nominal Margin Above Threshold vs Range
S/C to Earth Channel
Goldstone HA-DEC (Station 2)
Carrier - Telemetering
Margin Above Threshold
Range to Station (KM)
Maximum Negative Tolerances ~
Johannesburg
MSS Acquisition
Goldstone HA-DEC
Acquisition
60
50
40
30
20
10
0
10^3
10^4
10^5
10^6
10^7

Figure 4.2-6c.

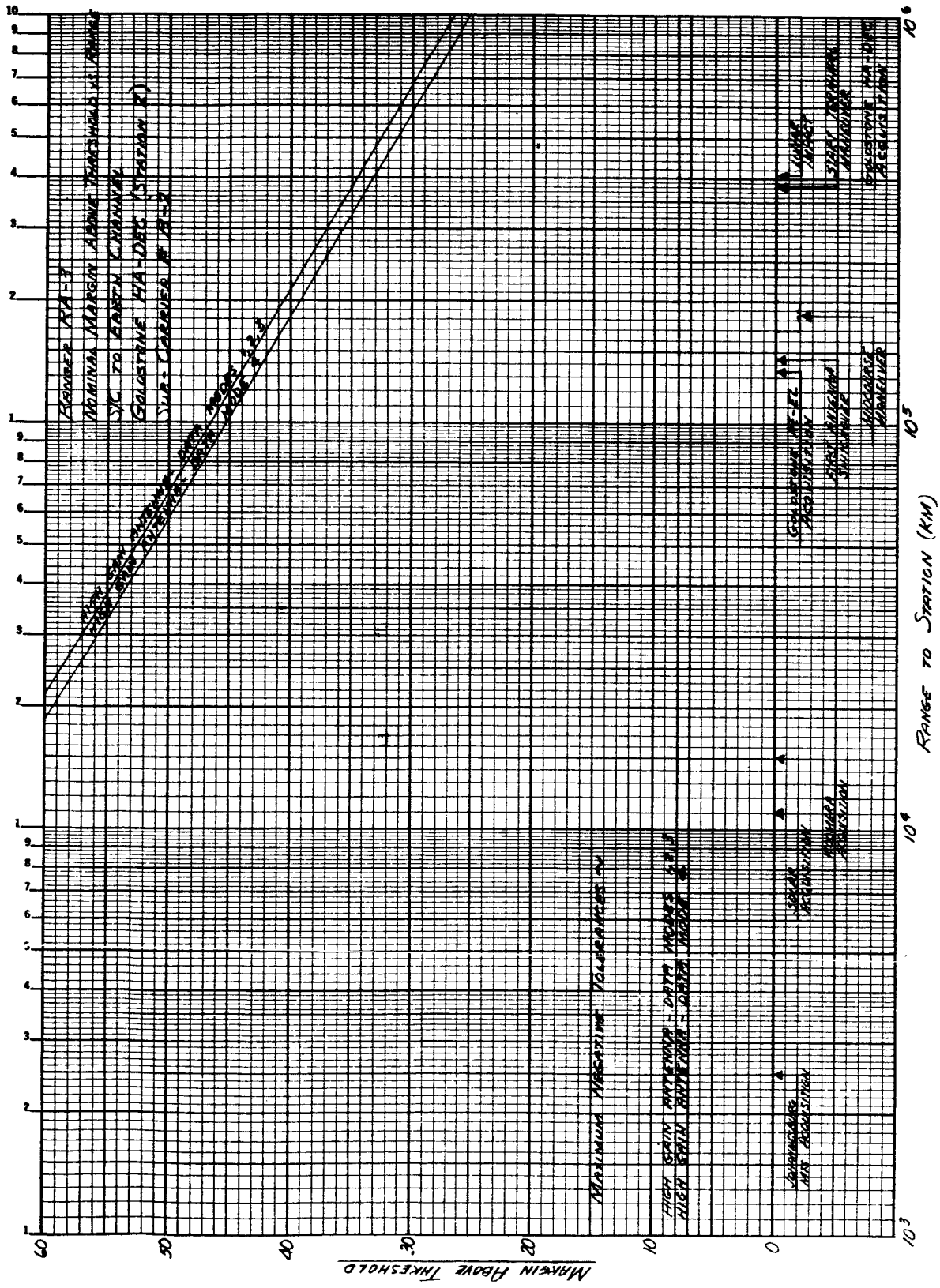

Figure 4.2-6d.

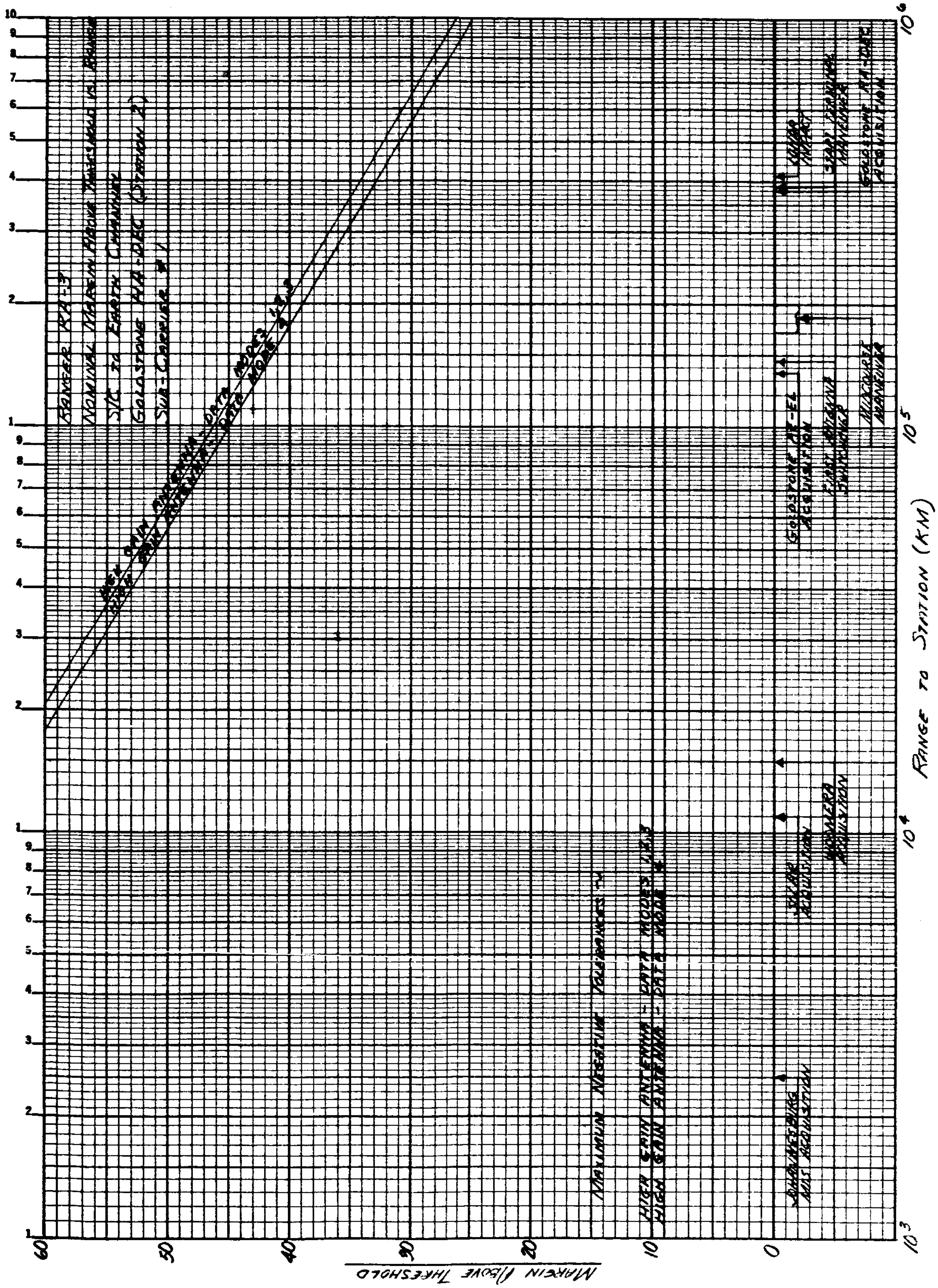
RANGER RA-3
NOMINAL MARGIN ABOVE THRESHOLD VS RANGE
S/C TO EARTH CHANNEL
GOLDSTONE HA-DEC (STATION 2)
SUB-CARRIER #1
RANGE TO STATION (KM)
MARGIN ABOVE THRESHOLD

Figure 4.2-6e.

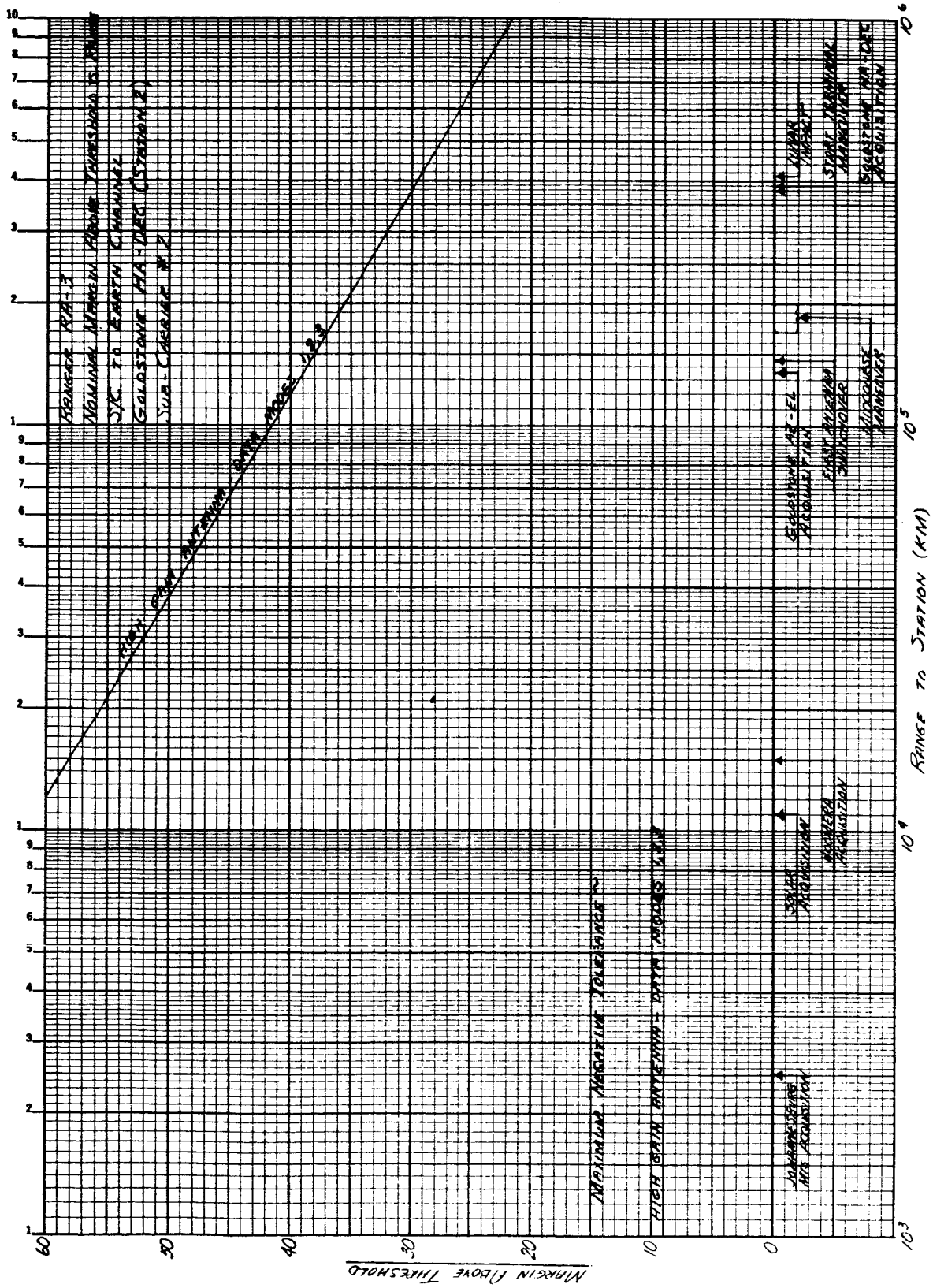
Range RA-3
Nominal Margin Above Threshold vs. Range
S/C to Earth Channel
Goldstone HA-DEC (Station 2)
Sub-Carrier #2
High Gain Antenna Data Modes 1,2,3
Maximum Negative Tolerance ~
High Gain Antenna - Data Modes 1,2,3
Johannesburg MIS Acquisition
Solar Acquisition
Mercury Acquisition
Goldstone AZ-EL Acquisition
First Antenna Switchover
Midcourse Maneuver
Lunar Impact
Start Terminal Maneuver
Goldstone HA-DEC Acquisition
Range to Station (KM)
Margin Above Threshold
60
50
40
30
20
10
0
10^3
10^4
10^5
10^6

Figure 4.2-6f.

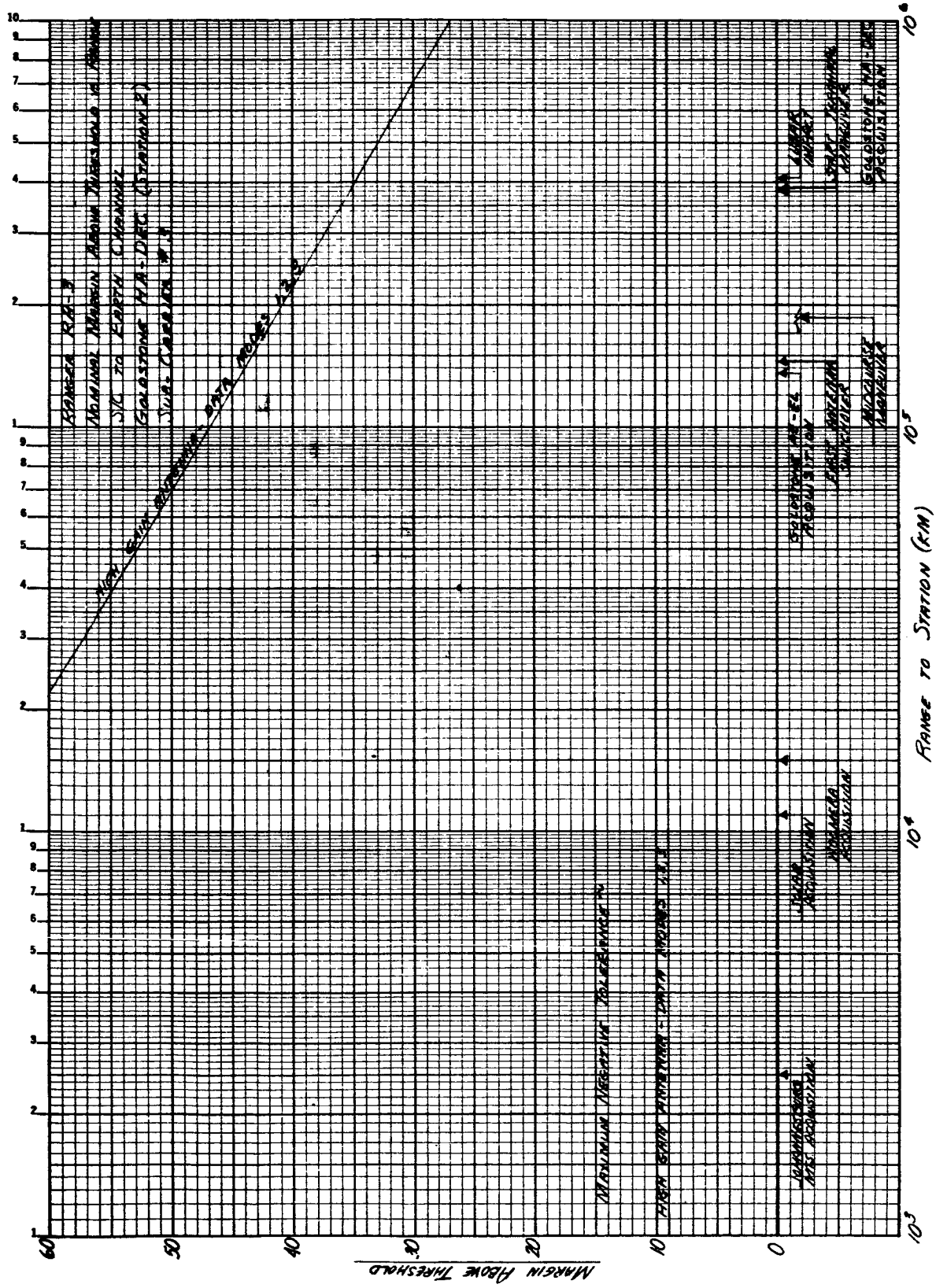
RANGE TO STATION (KM)
MARGIN ABOVE THRESHOLD
MAXIMUM NEGATIVE TOLERANCE
HIGH GAIN ANTENNA - DATA MODES 1,2,3
GOLDSTONE HA-DEC ACQUISITION
LUBAR IMPACT
START THERMAL MANEUVER
MIDCOURSE MANEUVER
JOHANNESBURG MTS ACQUISITION
SOLAR ACQUISITION
HOLMERA ACQUISITION

Figure 4.2-6g.

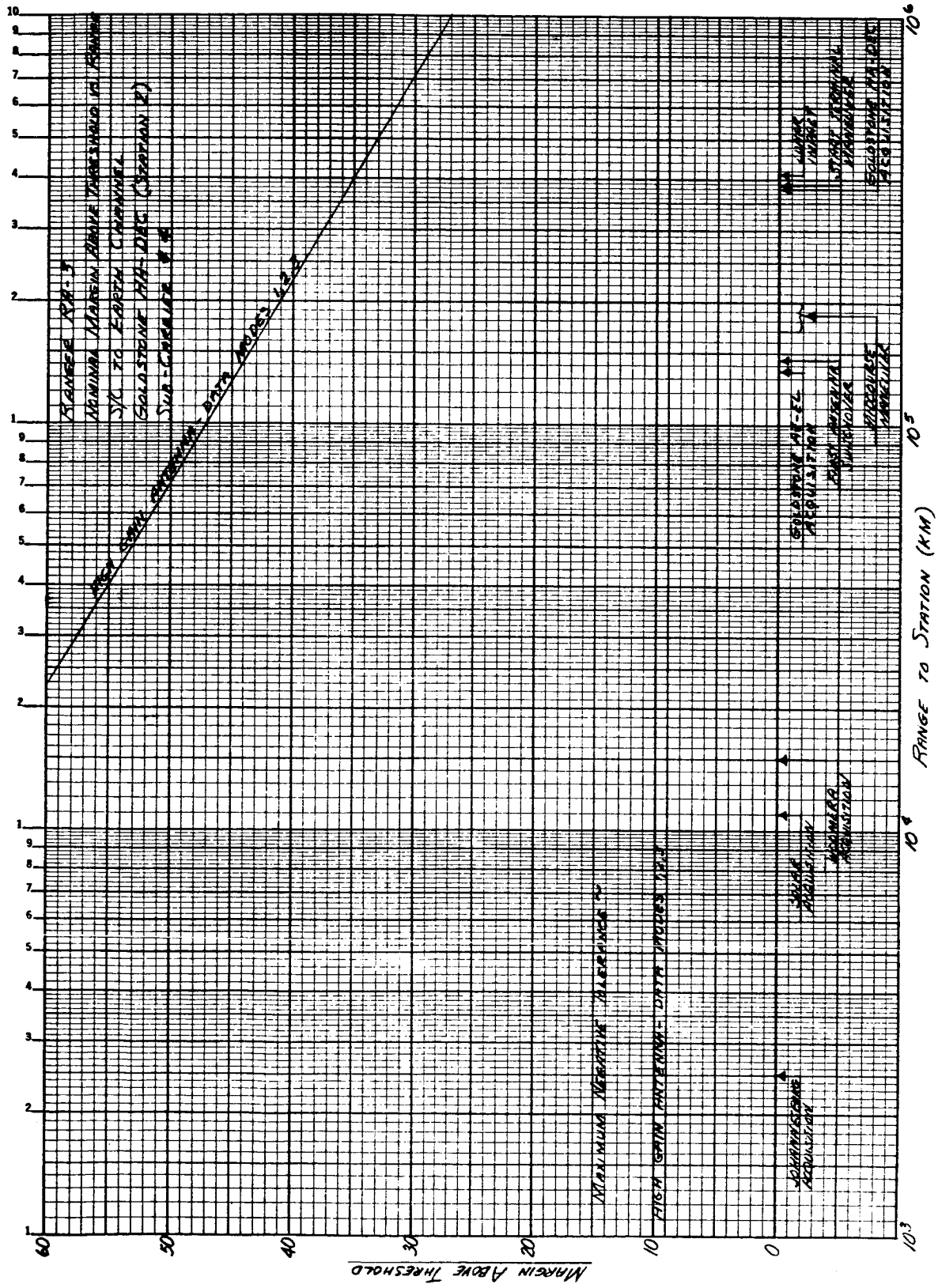
RANGER RA-3
NOMINAL MARGIN ABOVE THRESHOLD VS RANGE
S/C TO EARTH CHANNEL
GOLDSTONE HA-DEC (STATION 2)
SUB-CARRIER #4
HIGH GAIN ANTENNA - DATA MODES 1,2,3
MAXIMUM NEGATIVE TOLERANCE
HIGH GAIN ANTENNA - DATA MODES 1,2,3
JOHANNESBURG ACQUISITION
SOLAR ACQUISITION
WOOMERA ACQUISITION
GOLDSTONE AZ-EL ACQUISITION
FIRST ANTENNA SWITCHOVER
MIDCOURSE MANEUVER
LUNAR IMPACT
START TERMINAL MANEUVER
GOLDSTONE HA-DEC ACQUISITION
RANGE TO STATION (KM)
MARGIN ABOVE THRESHOLD
60
50
40
30
20
10
0
10^3
10^4
10^5
10^6

Figure 4.2-6h.

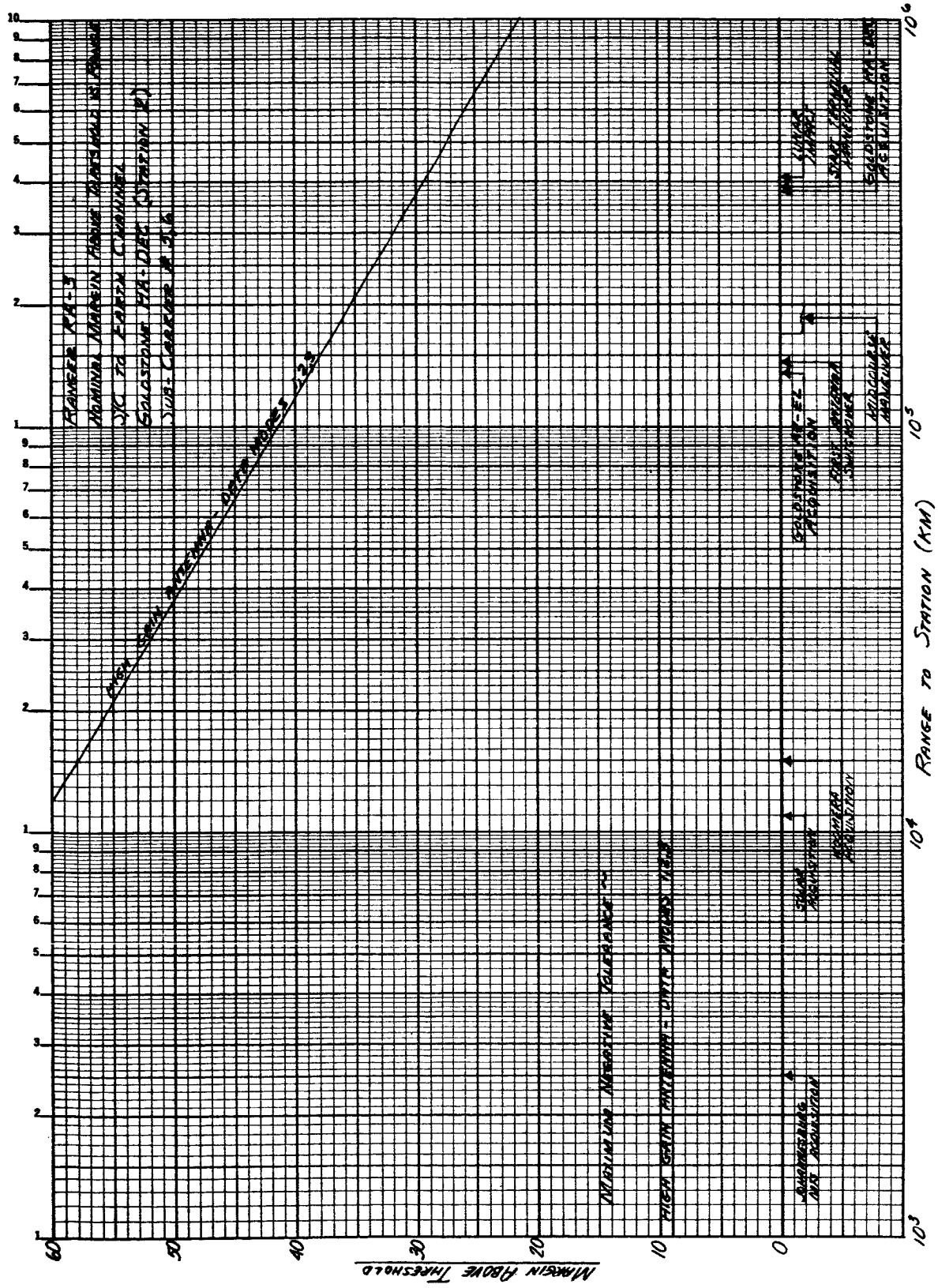
RANGER RA-3
NOMINAL MARGIN ABOVE THRESHOLD IS RANGE
S/C TO EARTH CHANNEL
GOLDSTONE HA-DEC (STATION 2)
SUB-CARRIER # 5,6
HIGH GAIN ANTENNA - DATA MODES 1,2,3
MAXIMUM NEGATIVE TOLERANCE ~
HIGH GAIN ANTENNA - DATA MODES 1,2,3
SHAMMERSBURG MFS ACQUISITION
SOLAR ACQUISITION
MOSAICA ACQUISITION
GOLDSTONE HA-EL ACQUISITION
FIRST ANTENNA SWITCHOVER
MIDCOURSE MANEUVER
LUNAR IMPACT
START TERMINAL MANEUVER
GOLDSTONE HA-DEC ACQUISITION
RANGE TO STATION (KM)
MARGIN ABOVE THRESHOLD
60
50
40
30
20
10
0
10^3
10^4
10^5
10^6

Figure 4.2-61.

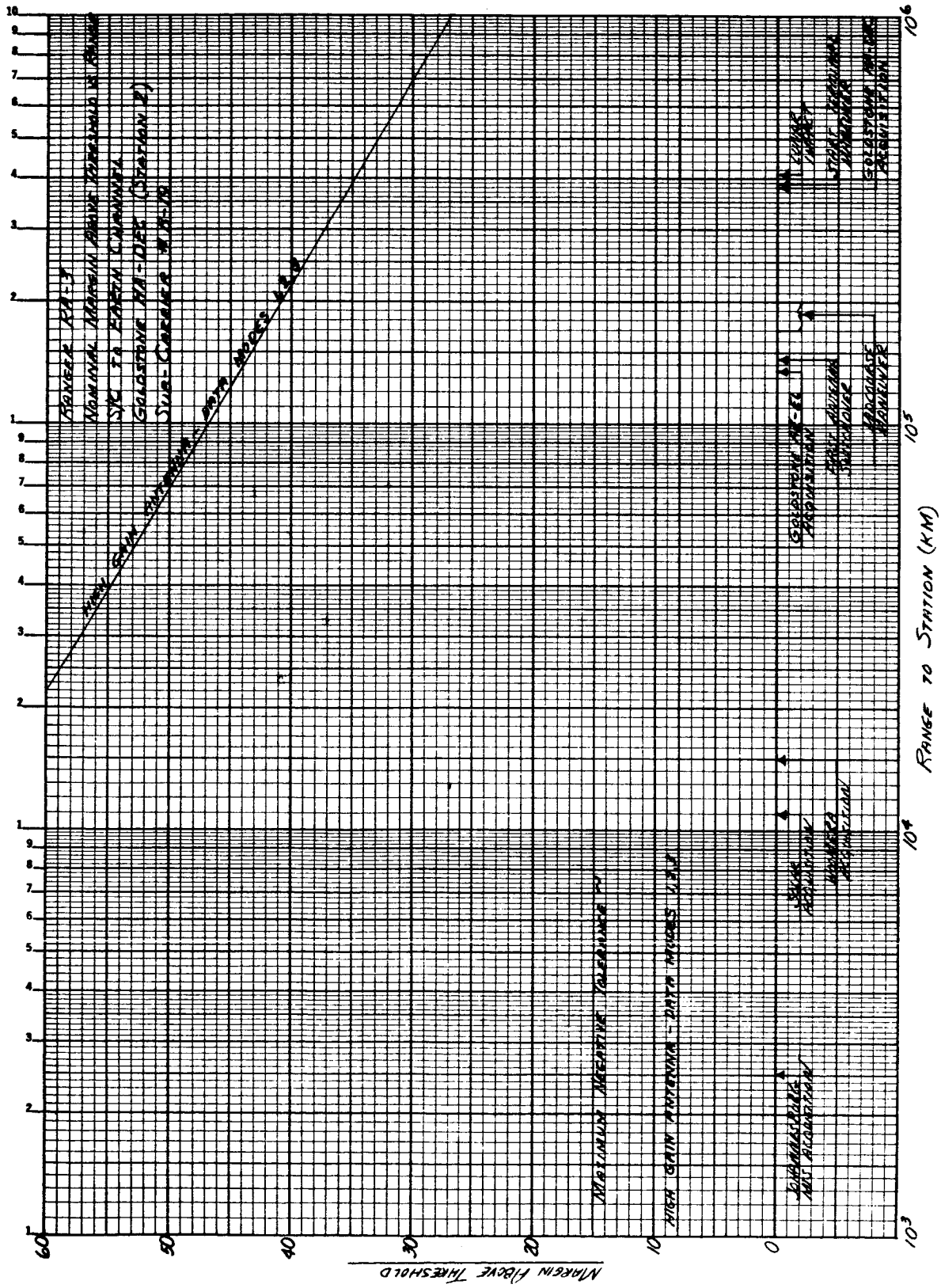
RANGER RA-3
NOMINAL MARGIN ABOVE THRESHOLD VS RANGE
S/C TO EARTH CHANNEL
GOLDSTONE HA-DEC (STATION 2)
SUB-CARRIER #B-19
HIGH GAIN ANTENNA - DATA MODES 1,2,3
MAXIMUM NEGATIVE TOLERANCE
HIGH GAIN ANTENNA - DATA MODES 1,2,3
JOHANNESBURG MIS ACQUISITION
SALAR ACQUISITION
WOOMERA ACQUISITION
GOLDSTONE AZ-EL ACQUISITION
FIRST ANTENNA SWITCHOVER
MADCOMBSE MANEUVER
LUNAR IMPACT
START TERMINAL MANEUVER
GOLDSTONE HA-DEC ACQUISITION
RANGE TO STATION (KM)
MARGIN ABOVE THRESHOLD
60
50
40
30
20
10
0
10^3
10^4
10^5
10^6

Figure 4.2-6j.

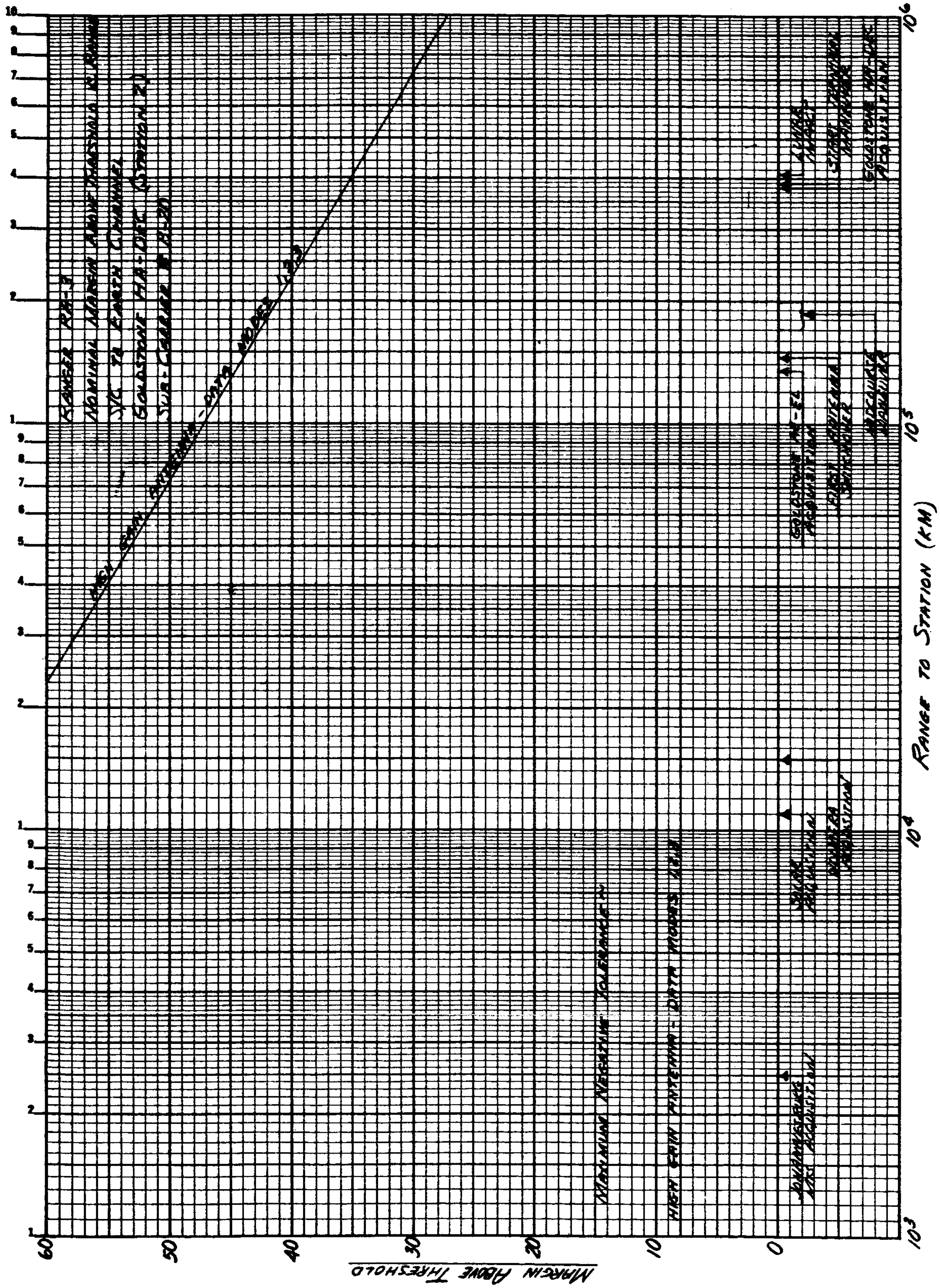
RANGER RA-3
S/C TO EARTH CHANNEL
MAXIMUM NEGATIVE TOLERANCE
RANGE TO STATION (KM)
MARGIN ABOVE THRESHOLD
60
50
40
30
20
10
0
10^3
10^4
10^5
10^6

Figure 4.2-6k.

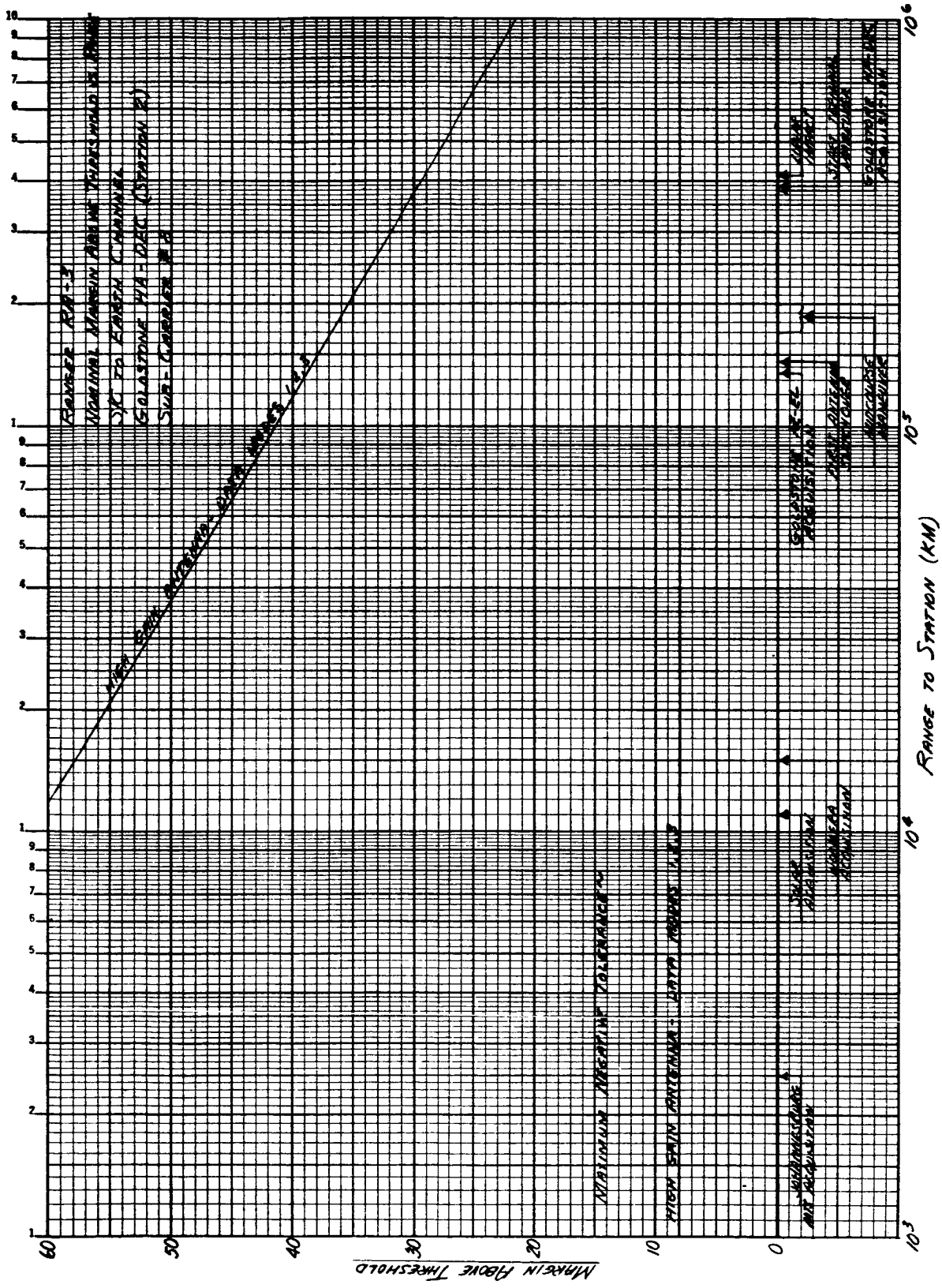
RANGE TO STATION (KM)
MARGIN ABOVE THRESHOLD
60
50
40
30
20
10
0
10^3
10^4
10^5
10^6

Figure 4.2-61.

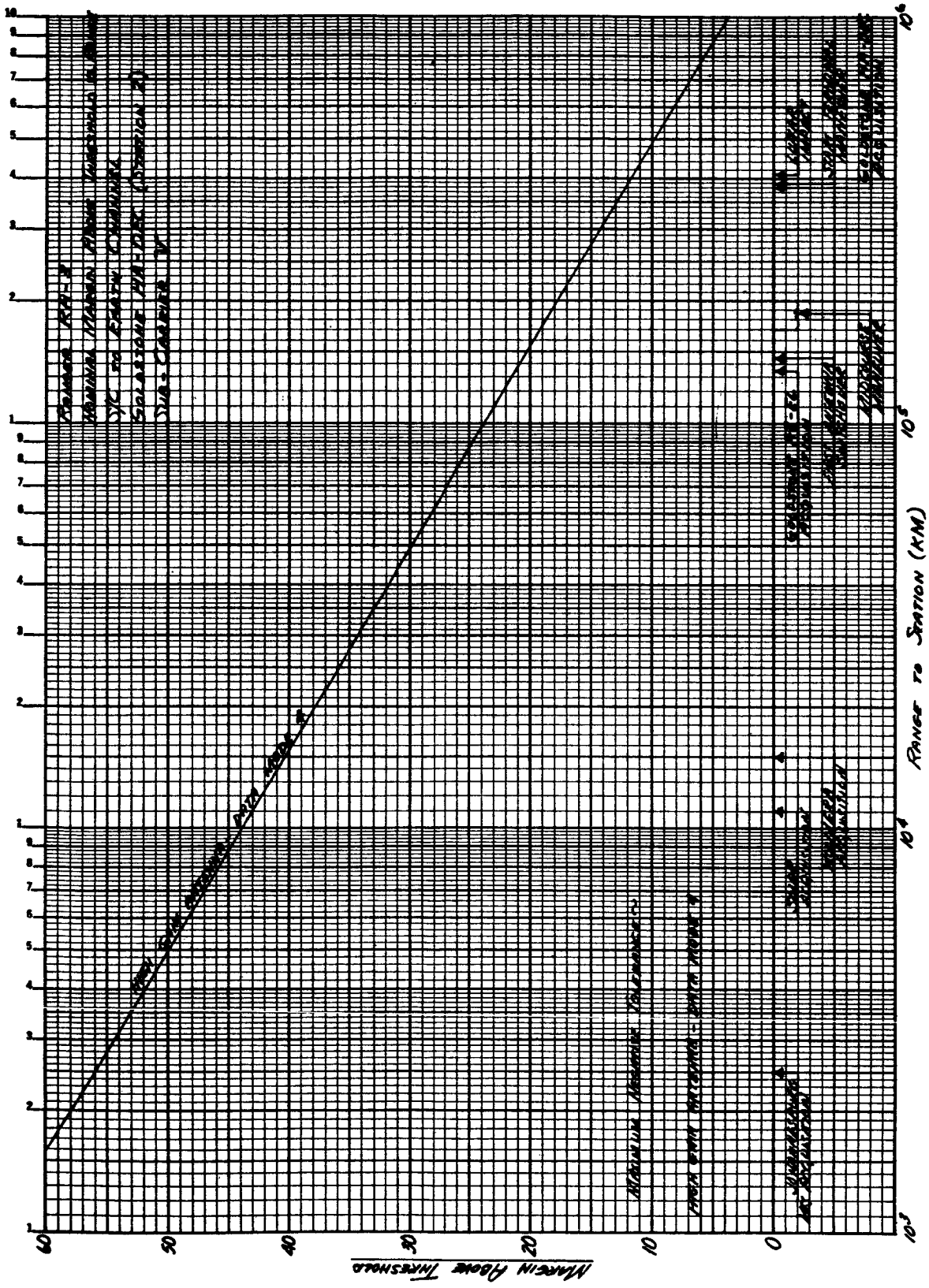

Figure 4.2-6m.

(Insert in Spacecraft Design Specification Book) APPROVED:

System: M. R. Mesnard

Subsystem: J. F. Kenkel [illegible]

Subsystem: H. F. Verse

JET PROPULSION LABORATORY

Spec. No. RA345-4-320B

15 March 1962

SUPERSEDES:
RA12345-4-320A
RA345-4-340
RA12345-4-360
RA12345-4-370

FUNCTIONAL SPECIFICATION
RANGER RA3, RA4, AND RA5 SPACECRAFT
SPACECRAFT RADIO SUBSYSTEM

REVISED & REWRITTEN

1.0 SCOPE

1.1 This specification covers the functional requirements for the Ranger 3, 4, 5 spacecraft radio subsystem including the functions of radio receiving, demodulating, modulating, and transmitting required to be performed by the spacecraft to implement the over-all functions of tracking, telemetering, and commanding.

2.0 APPLICABLE DOCUMENTS

2.1 The following documents apply to this specification.

SPECIFICATIONS

Jet Propulsion Laboratory

	Spacecraft Design Specification Book, Ranger 3, 4, 5
30201	Environmental Specification, Ranger Flight Equipment Assembly Level Type Approval and Flight acceptance, Test Requirements

3.0 DESCRIPTION

3.1 General

3.1.1 Required Functions

The Ranger 3, 4, 5 spacecraft radio subsystem shall perform the following general functions:

a. Receive the RF signal transmitted to the spacecraft from the DSIF.

b. Coherently translate the frequency and phase of the received RF signal by a fixed ratio.

c. Transmit a modulated RF signal to the stations of the DSIF.

d. Modulate the transmitted signal with a composite telemetry signal.

e. Demodulate the received RF signal to send a composite command signal to the spacecraft command subsystem.

3.1.2 Subsystem Elements

The spacecraft radio subsystem shall consist of the following elements:

a. Transponder

b. Diplexer

c. RF cavity amplifiers

d. High-gain power monitor

e. Low-gain power monitor

f. Antenna transfer switch and junction box

g. Low-gain transmitting and receiving antenna

h. High-gain transmitting antenna

i. Rotary joint

3.1.3 Subsystem Modes

The spacecraft radio subsystem shall be capable of operating in the following modes:

a. Low or normal power output

b. Low-gain or high-gain transmitting antenna

c. Coherent or non-coherent

3.1.4 Block Diagram

The inter-relationship of the subsystem elements shall be as shown in figure 3.1-1.

3.2 Transponder

3.2.1 Description

The transponder shall consist of an extremely narrow-band, double superheterodyne, automatic phase tracking receiver operating at 890 mc and an integrally related transmitter operating at 960 mc. Except for the vacuum tube cavity amplifiers in the transmitter, the transponding elements of the telecommunications subsystem shall be solid state devices. The 5 mw output signal of the solid state portion shall be amplified to 3 watts in two vacuum tube cavity amplifiers operating in cascade.

The transmitter shall be arranged to feed either the Low-gain or High-gain antenna. This shall be accomplished by driving the first cavity amplifier (250 mw) from the solid state output and then driving either of two 3-watt cavity amplifiers from the output of the 250 mw cavity amplifier. Each of these amplifiers shall drive one of the antennas. Only one of the 3-watt cavity amplifiers shall be operated during a period of time as selected by ground and/or CC&S command.
The transponder shall have two modes of operation:

a. Non-coherent: The non-coherent mode shall be used when the transponder is not receiving a signal from Earth. Under this condition, the transmitter shall be driven from a crystal oscillator and provide a stable signal source for the spacecraft-to-earth link.

b. Coherent: The coherent mode shall be selected automatically wheneven the transponder receiver locks to an incoming signal. A transfer switch, which is controlled by the coherent AGC system, shall bias-off the crystal oscillator and at the same time switch the VCO output signal to the transmitter multiplier chain. The coherent mode shall prove a completely coherent system whereby the phase and frequency of the transmitted signal is integrally related to that of the received signal by the ratio 96/89.

3.2.1.1 Location of Circuitry

The acquisition circuitry for the transponder shall be located in the ground DSIF station.

3.2.1.2 Acquisition Procedure

The ground receiver frequency shall be slowly varied until it acquires the transponder transmitted signal (operating in the non-coherent mode). Once the receiver is locked, the operator shall transmit an earth-to-space signal which shall be varied slowly in frequency about the expected transponder receiver lock-on frequency. Upon acquisition, an AGC voltage is generated which in turn switches the transponder transmission mode from fixed oscillator to coherent VCO operation. This transition may result in a transmitter frequency shift and may require reacquisition by the ground receiver.

3.2.2 Diplexer

The diplexer permits the use of the Low-gain antenna for both the transponder transmitter and the transponder receiver. The diplexer shall effectively isolate the receiver from the high-level RF power that is produced by the transmitter. At least 100 db of isolation shall be provided at the transmitter frequency to prevent any interference to the receiver.

3.2.3 RF Cavity Amplifiers

The RF cavity amplifiers shall amplify the transponder output signal to a power level of 3 watts.

The block diagram (figure 3.2-1) shows the interconnection of the amplifiers. Amplifier 2A2 is used as a driver for either (but not both) of the remaining cavities 2A3 and 2A5. By means of a filament switch, either of the output cavities can be made to operate, thereby changing the transmitter signal from the Low-gain antenna to the High-gain antenna. The switching is controlled by either the spacecraft internal command system, through ground commands received by the transponder, or by ground support equipment commands to the antenna transfer switch. As the RF signal is directed from one antenna system to the other by means of the amplifier filament switch, the inoperative cavity is transformed to a high impedance by means of tuned lines thereby minimizing the RF loading effects of the off unit and reducing the leakage through the inoperative antenna.

3.2.4 High-gain Power Monitor

The High-gain Power Monitor shall sample and detect the RF power from High-gain cavity amplifier.

3.2.5 Low-gain Power Monitor

The Low-gain Power Monitor shall sample and detect the power from the Low-gain cavity amplifier.

3.2.6 Antenna Transfer Switch and Junction Box

The Antenna Transfer Switch shall provide the circuitry to switch the 3-watt transmitter between the High-gain directional antenna and Low-gain antenna. This function shall be achieved by switching the filament voltage of the respective cavity amplifiers.

3.2.6.1 Spacecraft Signal and Power Grounding

The spacecraft signal grounding shall terminate in the antenna transfer switch and junction box.

3.2.7 Low-gain Transmitting and Receiving Antenna

The low-gain antenna shall consist of a 1/4 wave stub above a tapered ground plane mounted on the roll axis of the spacecraft. The radiation pattern shall be approximately circularly symmetrical about the roll axis and shall provide a reasonably constant radiation level over the most probable range of look angles.

3.2.8 High-gain Transmitting Antenna

The High-gain transmitting antenna shall be a four-foot parabolic, linearly polarized unit. It is to be used for transmission of the 960 mc/sec. signal from the spacecraft during the times when the attitude control subsystem has stabilized the spacecraft with relation to the Earth. The antenna shall be movable about an axis which is perpendicular to the spacecraft roll axis. The hinge angle shall be controlled to point the antenna toward the Earth.

3.2.9 Rotary Joint

A rotary RF joint is required to allow for movement of the High-gain antenna during flight.

4.0 PARAMETERS

4.1 Transponder

The functional parameters of the transponder shall conform to the requirements of the following subparagraphs:

4.1.1 Frequency

The nominal input frequencies shall be 890.046 mc ±0.005 percent. The receiver shall be capable of tracking signals ±1.5 parts in 10^6 about these nominal frequencies.

4.1.2 Noise Figure

The noise figure shall be not greater than 15 db with an image rejection pre-selector having a loss no greater than 1 db.

4.1.3 Threshold

The threshold signal level shall be -139 dbm at the diplexer input terminal or -140 dbm at the mixer input terminal. The diplexer shall have an insertion loss no greater than 1 db. The threshold signal level is defined as the signal level at which the rf phase error at the receiver output, due to receiver noise, is 1 radian rms.

4.1.4 Range of Input Signal Level

The range of input signal level shall be -50 dbm to threshold.

4.1.5 RF Carrier APC Loop Characteristics

4.1.5.1 Transfer Function

$$H(s) = \frac{1 + \frac{3}{4B_L} s}{1 + \frac{3}{4B_L} s + \left(\frac{9}{32B_L^2}\right) s^2}$$

$$\text{where } 2B_L = \frac{-1}{2\pi} \int_{-\infty}^{+\infty} \left| H(jw) \right|^2 dw$$

$$2B_L = \frac{2}{3} B_{Lo} \left(1 + 2 \frac{\mathcal{L}}{\mathcal{L}_o}\right)$$

$$B_{Lo} = \left(\frac{9}{32} \frac{G'_o}{\tau_1}\right)^{1/2}$$

$$\tau_1 = R_1 C$$

G'_o = Open loop gain at threshold

= $360 \times 44.5 \times k_m k_v \mathcal{L}_o$

k_m = Sensitivity of RF phase detector

= 0.175 volt/degree (strong signal)

k_v = Sensitivity of the RF vco in cps/volt

= 600 cps/volt nominal

$\mathcal{L}_o$ = Signal suppression factor at threshold

= 0.2 volt/degree (threshold)

$$\mathcal{L} = \left[\frac{1}{1 + \log_{10}^{-1}\left(\frac{1 + P_n - P_s}{10}\right)} \right]^{1/2}$$

where P_n = Available noise power in 2nd IF passband (dbm)

P_s = Available signal carrier power in 2nd IF passband (dbm)

4.1.5.2 Effective Noise Bandwidth

4.1.5.2.1 Bandwidth at Threshold and Signal Frequency

Design value of noise bandwidth at design threshold and at nominal signal frequency shall be 100 cps.

4.1.5.2.2 Variation With Signal Level

The RF loop noise bandwidth shall vary from 100 cps at threshold to 620 cps at strong levels.

4.1.5.3 Phase Error

4.1.5.3.1 Variation With Signal Frequency

The static phase error at threshold shall not exceed 5.5° at signal frequencies displaced ±1.7 parts in 10^6 from the design signal frequency. The static phase error at strong signal levels shall not exceed 30° at signal frequencies displaced ±7.4 parts in 10^6 from the design frequency.

4.1.6 AGC Loop Characteristics (Coherent AGC)

4.1.6.1 Transfer Function

$$H(s) = \frac{1}{1 + \frac{\tau s}{G}}$$

where τ = loop filter time constant

= 7.5 seconds, nominal

G = loop gain

= $K_D K_A G'$ = 45 (at threshold)

= 157.5 (at strong signal)

K_D = AGC detector gain, 0.15v/db nominal

K_A = Receiver gain, 7.5 db/v nominal (at threshold)

G' = Amplifier gain, 15.0 v/v nominal

4.1.6.2 Noise Bandwidth

4.1.6.2.1 Noise Bandwidth at Threshold

The design value of the noise bandwidth at design threshold shall be B_L = 1.5 cps.

4.1.6.2.2 Variation With Signal Level

The AGC loop noise bandwidth shall vary from 1.5 cps at threshold to not more than 5.25 cps at an input signal level of -50 dbm.

4.1.6.3 Gain Error

4.1.6.3.1 Static Gain Error

The variation in coherent receiver output shall vary not more than 2 db for input signal level variations of -50 dbm to threshold.

4.1.7 Modulation Characteristics

4.1.7.1 Amplitude and Phase Modulation Response

The amplitude and phase modulation response of the receiver measured at the output of the amplitude and phase detectors shall be flat within ± 1.5 db from 320 cps to 1000 cps for the input signal level range of -50 dbm to threshold.

4.1.8 Receiver, General

The general electrical characteristics of the receiver shall conform to the specifications of the following subparagraphs.

4.1.8.1 Nominal Impedances

The nominal receiver and first mixer input impedances shall be 50 ohms with a VSWR of 1.5 to 1 or less.

4.1.8.2 Spurious Responses

All spurious responses shall be attenuated by 40 db minimum from the desired response.

4.1.8.3 Residual Phase Modulation

The residual phase modulation (noise) at an input signal level of -50 dbm due to all sources other than environment and the effective system noise temperature shall be less than 3 degrees peak in a 20 cps bandwidth.

4.1.8.4 Internal Interference in the RF Loop

The internal interference in the RF loop due to coherent leakage signals of the receiver shall be 40 db below the signal level at threshold when the interference enters ahead of the limiter and at least 60 db below the signal level at threshold when the interference enters following the limiter.

4.1.8.5 Internal Interference in the AGC Loop

The interference in the AGC loop due to coherent leakage signals of the receiver shall be 40 db below the signal level at threshold.

4.1.8.6 Receiver Intermediate Frequencies

4.1.8.6.1 The first IF shall be 50.0026 mc (nominal).

4.1.8.6.2 The second IF shall be 10.0005 mc (nominal).

4.1.8.7 Coherent Local Reference Frequencies

4.1.8.7.1 The first local oscillator frequency shall be 840.044 mc (nominal).

4.1.8.7.2 The second local oscillator frequency shall be 40.0021 mc (nominal).

4.1.8.7.3 The phase detector reference frequency shall be 10.0005 mc (nominal).

4.1.8.7.4 The voltage controlled oscillator frequency shall be 20.0010 mc (nominal).

4.1.8.8 Unsynchronized VCO Stability

When no signal is in the predetection passband, the short term frequency stability shall be 1 part in 10^7 and the long term frequency stability shall be 1 part in 10^6.

4.1.9 Transmitter - Electrical

The electrical characteristics of the transmitter shall be specified in the following subparagraphs.

4.1.9.1 Nominal Frequency

The nominal frequency shall be 960.050 mc

4.1.9.2 Power Output

The power output shall be +7 dbm minimum. The variation from nominal shall be no greater than ±1.5 db.

4.1.9.3 Bandwidth

The 3 db bandwidth shall be 6.0 mc.

4.1.9.4 Phase Characteristics

4.1.9.4.1 Phase Control

The unmodulated phase of the carrier shall be determined by the phase of the receiver voltage-controlled oscillator or an auxiliary crystal controlled oscillator as selected by a suitable command.

4.1.9.4.2 Phase Stability

The phase stability of the unmodulated carrier shall be such as to cause not more than 3 degrees peak phase error in a noise-free, phase-coherent receiver. The receiver is to have a phase transfer function defined by:

$$H(s) = \frac{1 + \frac{3}{4B_L} s}{1 + \frac{3}{4B_L} s + \left(\frac{9}{32B_L^2}\right) s^2}$$

where B_L is defined by:

$$2 B_L = \frac{1}{2\pi} \int_{-\infty}^{+\infty} \left| H(jw) \right|^2 dw = 20 \text{ cps}$$

During vibration tests, the additional phase error above residual shall not exceed 2° peak per g rms.

4.1.9.5 Modulation Characteristics

4.1.9.5.1 Type

The transmitter shall be phase modulated.

4.1.9.5.2 Phase Deviation

The phase modulator shall be capable of modulating the carrier ±4 radians at the output frequency.

4.1.9.5.3 Linearity

The phase modulation characteristics shall not deviate from a linear characteristic by more than ±5.0 percent for a peak deviation of ±4 radians.

4.1.9.5.4 Modulation Sensitivity

The modulation sensitivity shall be 2 radians per volt ±2.0 percent.

4.1.9.5.5 Modulation Stability

The modulation sensitivity shall be stable to within ±6.0 percent of the nominal value.

4.1.9.5.6 Frequency Response

The modulation sensitivity shall be constant within ±3 db from dc to 3 mc.

4.1.10 Spurious Radiation

The spurious radiations shall be at least 60 db below the desired power output.

4.1.11 Output Impedance

The output impedance shall be 50 ohms with a VSWR of 1.5 to 1 or less.

4.2 RF Cavity Amplifiers

The parameters that define the operation of the RF cavity amplifiers shall meet the requirements listed in table 4.2-1.

4.3 High-Gain Power Monitor

a. Insertion loss - less than 0.1 db

b. Coupling - 350 mv max. with 3 watts input

c. Input VSWR - 1.2 max.

d. Output VSWR - 1.2 max.

4.4 Low-Gain Power Monitor

a. Insertion loss - less than 0.1 db.

b. Coupling - 350 mv max. with 3 watts input

c. Input VSWR - 1.2 max.

d. Output VSWR - 1.2 max.

4.5 Antenna Transfer Switch

a. Current rating - the filament switch shall be rated at 2.0 amp. min.

b. Central circuit - the filament switch shall be operated by the following sources during flight:

1) CC&S subsystem

2) Command subsystem

c. Control circuit - the filament switch shall be operated by the following sources during system and subsystem checks:

1) CC&S subsystem

2) Command subsystem

3) GSE or blockhouse

4.5.1 Antenna Switch Indicator

The Antenna Transfer switch shall have a monitoring circuit to enable the blockhouse or GSE to indicate the filament relay position.

Table 4. 2-1

	Driver Cavity, 2A2	Low-Gain or High-Gain Cavities, 2A5 or 2A3
Frequency	960 mc/s ±0. 5 mc/s	960 mc/s ±0. 5 mc/s
Gain	17. 8 db - minimum	10. 8 db - minimum
Bandwidth	4. 0 mc/s - minimum	12. 0 mc/s - minimum
Input RF Power	5. 0 milliwatt - minimum	250 milliwatt - minimum
Output RF Power	250 milliwatt - minimum	3. 0 watts - minimum
Plate Efficiency	5. 8 percent - minimum	31. 8 percent - minimum
Anode Voltage	150 volts dc ±3. 0 percent	250 volts dc ±3. 0 percent
* Anode current	12. 0 milliamperes max.	23. 0 milliamperes max.
Filament Voltage	5. 7 volts dc ±2. 5 percent	5. 75 volts dc ±2. 5 percent
Filament Current	550 milliamperes ±2. 5%	550 milliamperes ±2. 5 percent
Input impedance	50. 0 ohms res. ±10. 0%	50. 0 ohms res. ±10. 0 percent
Output Impedance	50. 0 ohms res. ±5. 0%	50. 0 ohms res. ±5. 0%
* Adjust for proper cavity operation.		

4. 6 Antennas

4. 6. 1 Low-Gain, Quasi Omni-Directional Transmitting and Receiving Antenna

The gain shall be no less than 2. 0 db below isotropic within ±30 degrees of the spacecraft equatorial plane.

4. 6. 2 High-Gain Antenna

The High-Gain antenna shall have a peak gain of 18. 5 db minimum above isotropic. The polarization of the feed shall be linear.

4. 7 Power Input Requirements

a. +20 Volts 370 Milliamperes

b. -20 Volts 90 Milliamperes

c. +5. 75 Volts 550 Milliamperes

d.	+5.75 Volts	550 Milliamperes
e.	+150 Volts	12 Milliamperes
f.	+250 Volts	23 Milliamperes
g.	+28 Volts	100 Milliamperes (intermittent)

4.8 Weights

The weights of the radio subsystem elements shall not exceed the weights specified in RA-345-4-120.

4.9 Volume

The volume required by the radio subsystem elements shall be limited to the following values:

a.	Transponder	434 cu. in.
b.	Diplexer	37 cu. in.
c.	RF Driver Cavity (2A2)	20.2 cu. in.
d.	Low-Gain Cavity (2A5)	20.2 cu. in.
e.	High-Gain Cavity (2A3)	20.2 cu. in.
f.	Antenna transfer switch	17.5 cu. in.
g.	High-Gain power monitor	6.0 cu. in.
h.	Low-Gain power monitor	6.0 cu. in.

4.10 Total rf system power consumptions and dissipations shall be as follows:

a. The total power consumption shall be less than 20.0 watts.

b. The power dissipations shall be less than:

1)	Transponder	7.4 watts
2)	Driver Cavity Amplifier (2A2)	4.7 watts
3)	Low-Gain or High-Gain Cavity Amplifier (2A5 or 2A3)	6.2 watts
4)	Antenna transfer Switch	2.8 watts (intermittent)

5.0 CONSTRAINTS

5.1 DSIF Compatibility

The spacecraft transmitter design shall be compatible with the launch-to-injection ground receivers used at Cape Canaveral, and with the Deep Space Instrumentation Facilities at Goldstone, Australia, South Africa, and the mobile tracking station. The spacecraft receiver design shall be compatible with the Goldstone 10 kw transmitter, and with the transmitter in the launch-to-injection station.

6.0 Interface Characteristics

6.1 Interface Definitions

The interfaces between the radio subsystem and the adjoining subsystem listed below, shall be as indicated in figure 3.1-1.

6.1.1 Telemetry System Interface

The telemetry system is supplied with certain signals that are required to ascertain the proper operation of the transponder system. These are:

6.1.1.1 AGC Fine and Coarse

This function is to be provided by a single wire that shall contain the AGC voltage produced by the transponder.

6.1.1.1.1 Voltage Range

The voltage range of this signal shall be -1.5 volts dc to +5.0 volts dc which corresponds to a received signal strength that varies from -50 dbm to threshold, -140 dbm.

6.1.1.2 Static Phase Error (SPE) Fine and Coarse

This function is to be provided by a single wire that shall contain the SPE voltage seen at the output of the receiver phase detector.

6.1.1.2.1 Voltage Range

The voltage range of this signal shall be ±1.5 volts. The fine SPE measurements shall be made, using 0 volts to -0.250 volts of this signal.

6.1.1.3 High-Gain Antenna Power Monitor

The diode probe shall be used to provide a dc signal that is calibrated to provide a measurement of the output cavity amplifier that drives the high-gain parabolic antenna.

6.1.1.3.1 Voltage Range

The voltage range shall be adjusted to provide +0.350 volts when the transmitter output is 34.8 dbm.

6.1.1.4 Low-Gain Antenna Power Monitor

A directional coupler and diode shall be used to provide a dc signal that is calibrated to provide a measurement of the incident power output of the cavity amplifier in the low-gain antenna system.

6.1.1.4.1 Voltage Range

The voltage range shall be adjusted to provide an output voltage of 0.350 volts when the transmitter output is 34.8 dbm.

6.1.1.5 Transponder RF Drive Monitor

This function is to be provided by a single wire that shall contain part of the voltage developed across the cathode resistor in the Driver Cavity.

6.1.1.5.1 Voltage Range

The voltage range of this signal shall be 0 volts dc to +0.500 volts dc which corresponds to a transponder RF output power of 0 dbm to +10.0 dbm.

6.1.1.6 Cavity Amplifier Plate Voltages

This function is to be provided by a single wire that shall contain a voltage from a voltage driver network in the antenna transfer switch and junction box assembly.

6.1.1.6.1 Voltage Range

The voltage range of this signal shall be 0 volts dc to +0.500 volts dc which corresponds to cavity amplifier plate voltages of 0 volts dc/0 volts dc to +150 volts dc/+250 volts dc.

6.1.1.7 Transponder Local Oscillator Drive

This function is to be provided by a single wire that shall contain a voltage from the first receiver mixer stage.

6.1.1.7.1 Voltage Range

The voltage range of this signal shall be 0 volts dc to -0.100 volts dc which shall correspond to a local oscillator drive power of -3 dbm to +3 dbm.

6.1.1.8 Transponder Temperature

This function is to be provided by two wires leading to a temperature transducer located in the transponder.

6.1.1.8.1 Voltage Range

The voltage and voltage range of this function are to be provided by Data Encoder and the temperature range to be measured is -10°C to +70°C.

6.1.2 Modulator Interface

The data encoder shall provide the necessary modulation signal to the transponder for telemetry purposes.

6.1.3 Command System Interface

6.1.3.1 The demodulator RF signal received from the DSIF stations shall be provided to the command system for the purpose of commanding the various spacecraft functions.

6.1.3.2 Bandwidth

The bandwidth of the transponder receiver shall be controlled with a crystal filter whose 3 db points shall be 6 kc wide ±5.0 percent

6.1.3.3 Antenna Transfer Commands

The antenna transfer commands shall consist of a +28 volts, dc pulse whose duration shall be 100 milliseconds ±10.0 percent.

6.1.4 CC&S Interface

The antenna transfer switch shall contain the required circuitry to switch the transmitter to the High-Gain directional antenna after mid-course maneuver.

6.1.4.1 The signal for this function shall be the closing of +28 volts, dc battery voltage to the circuit in the antenna transfer switch.

6.1.5 Ground Support Equipment Interface

A direct access connector shall be provided to allow measurement of transponder system fuctions with the necessary test equipment that is contained in the Radio Test Set.

6.1.6 Antenna and Shroud Interface

The necessary rf couplers shall be provided to check out the functioning of the antennas and to communicate with the spacecraft during the pad tests and the launch period.

6.1.7 Power Subsystem Interface

The necessary dc voltages for the communication system shall be provided by the appropriate subsystem.

6.1.8 Special Power Consideration

The appropriate subsystems shall provide the necessary circuits to allow the cavity amplifiers to operate at +150 volts during the decompression experienced during the launch phase of the mission. At launch + 23 minutes the voltage shall be raised to +250 volts for the power output required.

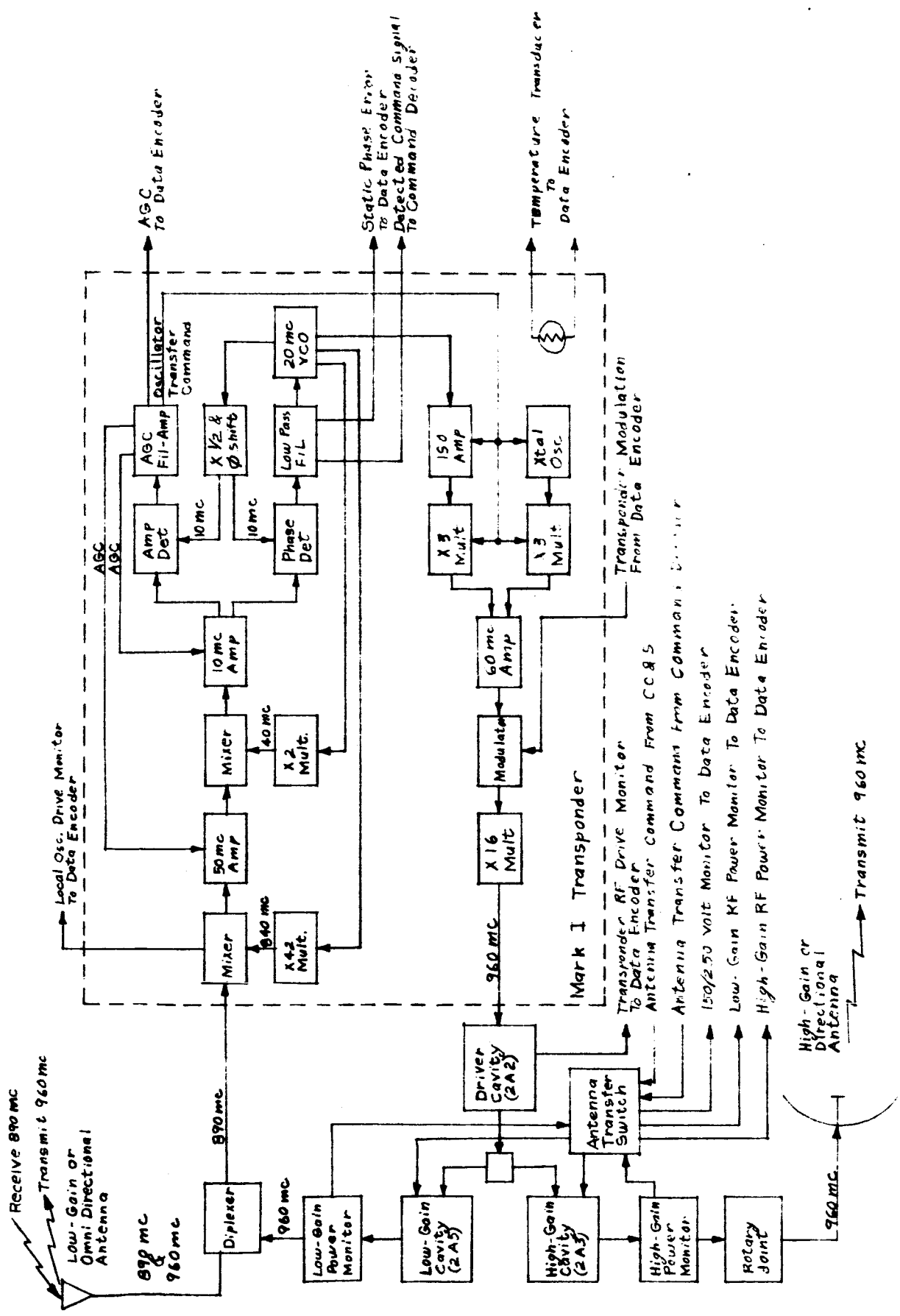

Figure 3.1-1. RA3, 4, 5, RF Communications Block Diagram

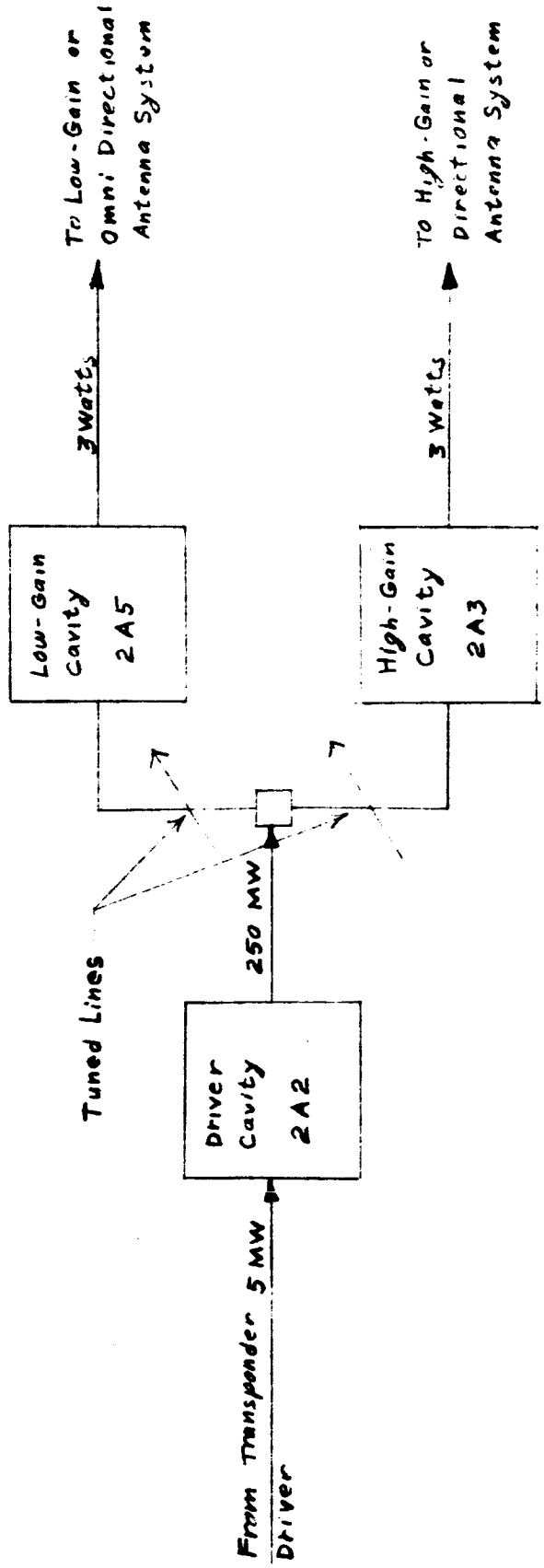

Figure 3.2-1. Interconnection of the Ranger 3, 4, 5, Cavity Amplifiers

APPROVED

(Insert in Spacecraft Design Specification Book) System: M. R. Mesnard

Subsystem: W G Leflang

Subsystem: J. F. Kocchal

JET PROPULSION LABORATORY

Spec. No. RA 345-4-321
19 January 1962

FUNCTIONAL SPECIFICATION
RANGER RA 3, RA 4, RA 5 SPACECRAFT FLIGHT EQUIPMENT
DATA ENCODER SUBSYSTEM

---

1. SCOPE

1.1 Scope

1.1.1 This specification covers the functional requirements for Ranger RA 345 Spacecraft Data Encoder Subsystem. This subsystem is required to perform the functions of transducing, conditioning, commutating, and encoding that are necessary to telemeter spacecraft engineering and scientific parameters.

1.1.2 This specification does not include the generation of timing, control functions or regulated power. These are to be supplied by other spacecraft subsystems as required.

1.1.3 This specification does not cover associated radio modulation and transmission functions.

1.1.4 This specification does not cover the transducing of parameters that require extraordinary equipment complication.

1.2 Introduction

The telemetry data requirements for RA 345 are indicated in Appendix IV of this Design Specification Book. The telemetry system shall provide approximately 90 engineering measurements divided among the attitude control system, the central power system, the central computer and sequencer (CC&S), the communication system, the midcourse propulsion system, and the spacecraft environment. This system shall also provide data encoding for the scientific experiments.

Two types of frequency multiplexed channels are used to provide encoding for the two types of data characteristics. One type of subcarrier (channels 1, 2, 3, 4, 5, 6 and V) carry analog type data, whereas the remaining channels (B-2, B-19, B-20, and 8) carry binary or two-state information. The spectral relationship for these channels is shown in figure 1.2-1.

2. APPLICABLE DOCUMENTS

2.1 The latest issues of the following documents form a part of this specification:

SPECIFICATIONS

Jet Propulsion Laboratory

	Spacecraft Design Specification Book Ranger 345
30201	Spacecraft Environmental Specification

DRAWING

Jet Propulsion Laboratory

J-102954	Block Diagram, Data Encoder, RA 345

3. DESCRIPTION

3.1 General

3.1.1 Block Diagram

A block diagram of the RA 345 Data Encoder is shown in figure 3.1.1-1 (J-102954).

3.1.2 Required Functions

The Data Encoder is required to encode all signals that are to be telemetered from the spacecraft. To perform this function it must:

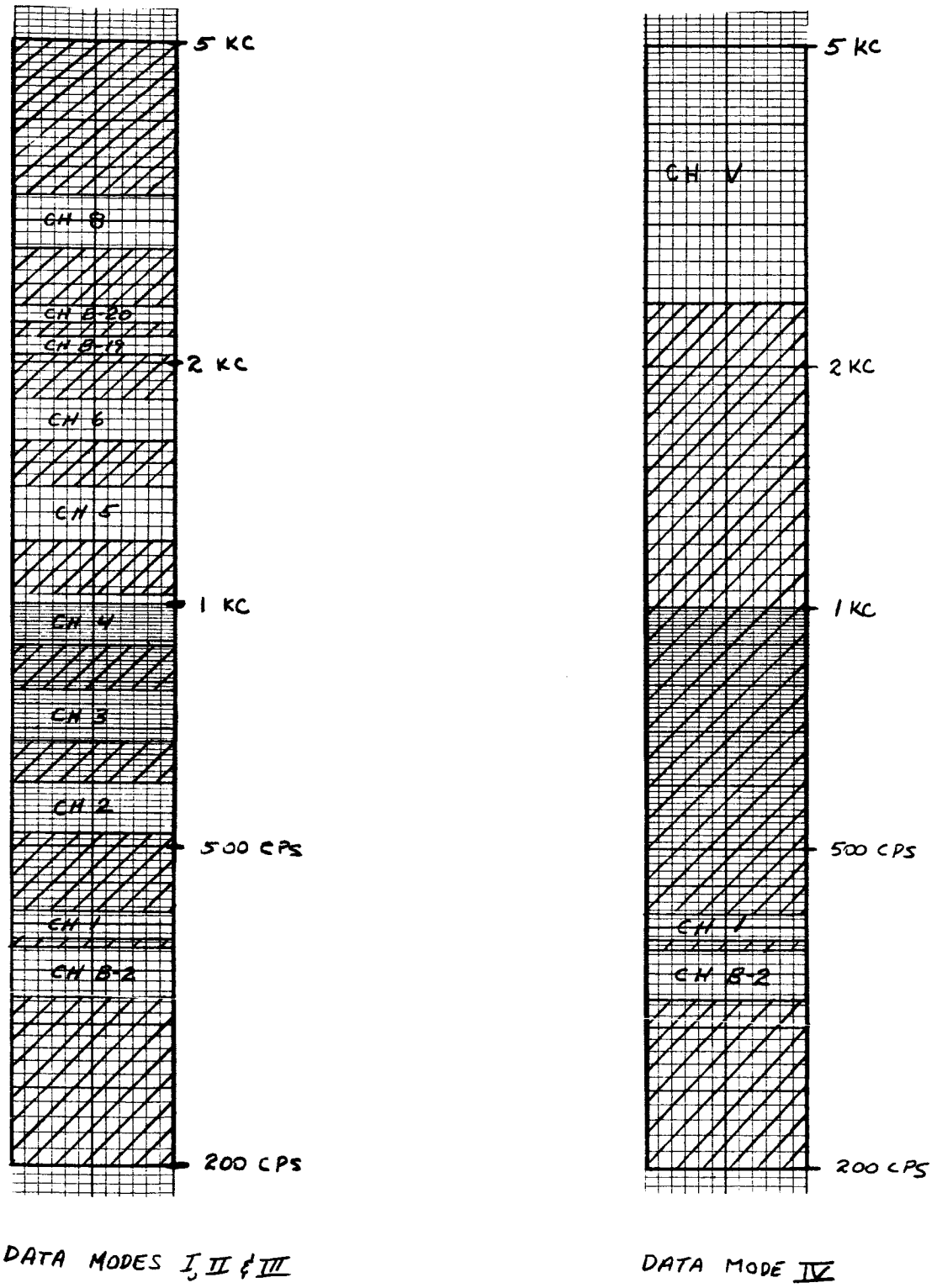

Figure 1.2-1. Spectral Relationship RA 345 Data Encoder

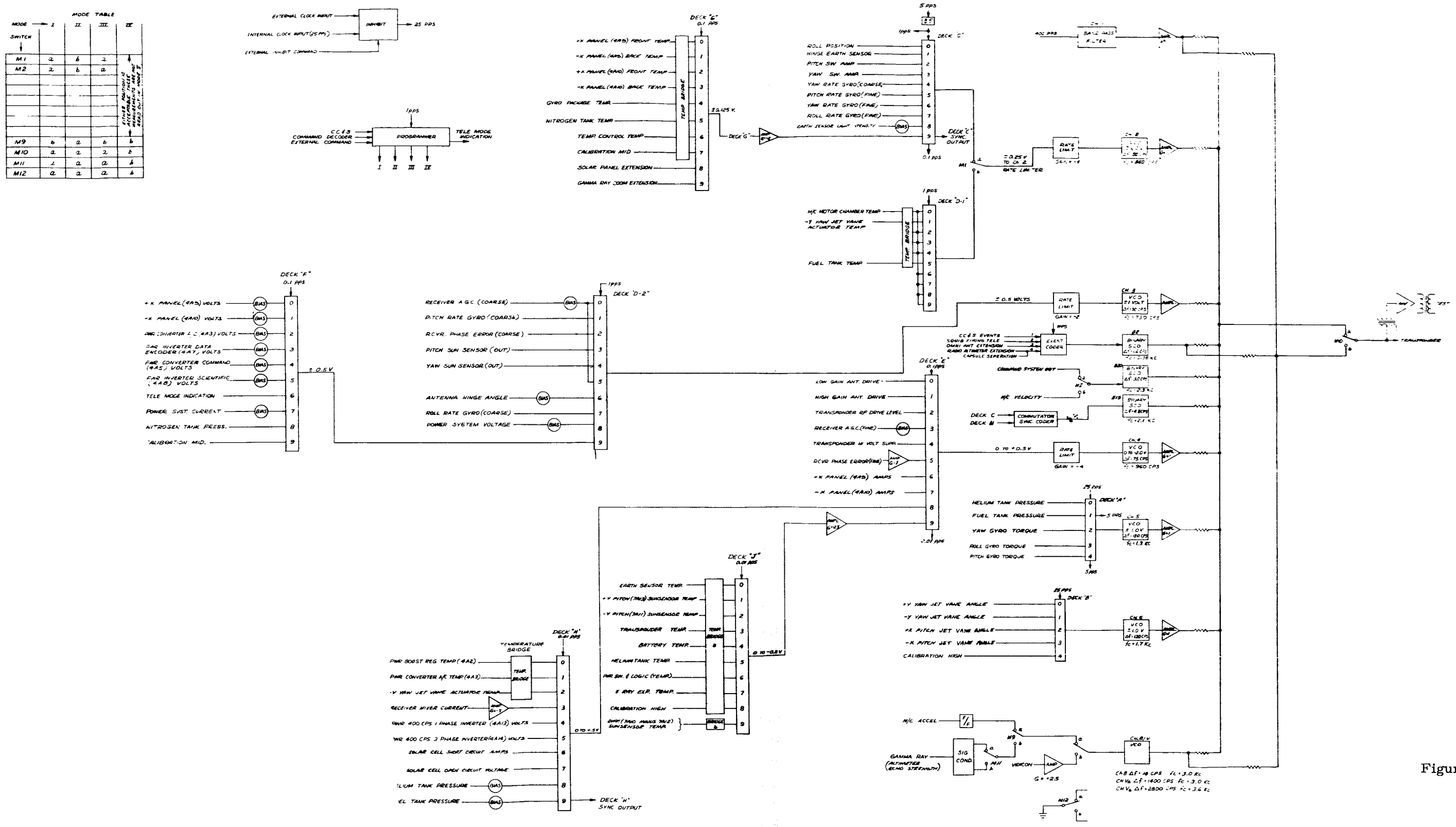
MODE TABLE
MODE
SWITCH
I
II
III
IV
M1
M2
M9
M10
M11
M12
EXTERNAL CLOCK INPUT
INTERNAL CLOCK INPUT (25 PPS)
EXTERNAL INHIBIT COMMAND
INHIBIT
25 PPS
PROGRAMMER
TELE MODE INDICATION
COMMAND DECODER
EXTERNAL COMMAND
DECK "G"
0.1 PPS
TEMP BRIDGE
+X PANEL (4A9) FRONT TEMP
-X PANEL (4A9) BACK TEMP
+X PANEL (4A10) FRONT TEMP
-X PANEL (4A10) BACK TEMP
GYRO PACKAGE TEMP
NITROGEN TANK TEMP
TEMP CONTROL TEMP
CALIBRATION MID
SOLAR PANEL EXTENSION
GAMMA RAY ZOOM EXTENSION
DECK "C"
ROLL POSITION
HINGE EARTH SENSOR
PITCH SW. AMP
YAW SW. AMP
YAW RATE GYRO (COARSE)
PITCH RATE GYRO (FINE)
YAW RATE GYRO (FINE)
ROLL RATE GYRO (FINE)
EARTH SENSOR LIGHT INTENSITY
DECK "C" SYNC. OUTPUT
DECK "D-1"
M/C MOTOR CHAMBER TEMP
-Y YAW JET VANE ACTUATOR TEMP
FUEL TANK TEMP
DECK "F"
+X PANEL (4A9) VOLTS
-X PANEL (4A10) VOLTS
FAR INVERTER DATA ENCODER (4A7) VOLTS
FAR CONVERTER COMMAND (4A5) VOLTS
FAR INVERTER SCIENTIFIC (4A8) VOLTS
TELE MODE INDICATION
POWER SYST. CURRENT
NITROGEN TANK PRESS.
CALIBRATION MID.
± 0.5 V
DECK "D-2"
RECEIVER A.G.C. (COARSE)
PITCH RATE GYRO (COARSE)
RCVR. PHASE ERROR (COARSE)
PITCH SUN SENSOR (OUT)
YAW SUN SENSOR (OUT)
ANTENNA HINGE ANGLE
ROLL RATE GYRO (COARSE)
POWER SYSTEM VOLTAGE
DECK "E"
LOW GAIN ANT. DRIVE
HIGH GAIN ANT. DRIVE
TRANSPONDER RF DRIVE LEVEL
RECEIVER A.G.C. (FINE)
TRANSPONDER 14 VOLT SUPP.
RCVR PHASE ERROR (FINE)
+X PANEL (4A9) AMPS
-X PANEL (4A10) AMPS
DECK "A"
HELIUM TANK PRESSURE
FUEL TANK PRESSURE
YAW GYRO TORQUE
ROLL GYRO TORQUE
PITCH GYRO TORQUE
DECK "B"
+Y YAW JET VANE ANGLE
-Y YAW JET VANE ANGLE
+X PITCH JET VANE ANGLE
-X PITCH JET VANE ANGLE
CALIBRATION HIGH
DECK "J"
EARTH SENSOR TEMP.
+Y PITCH (7A13) SUNSENSOR TEMP
-Y PITCH (7A11) SUNSENSOR TEMP
TRANSPONDER TEMP.
BATTERY TEMP.
HELIUM TANK TEMP.
PWR SW. & LOGIC (TEMP.)
X RAY EXP. TEMP.
CALIBRATION HIGH
DECK "H"
TEMPERATURE BRIDGE
PWR BOOST REG. TEMP (4A2)
PWR CONVERTER A/C TEMP (4A3)
-Y YAW JET VANE ACTUATOR TEMP
RECEIVER MIXER CURRENT
PWR 400 CPS 1 PHASE INVERTER (4A13) VOLTS
PWR 400 CPS 3 PHASE INVERTER (4A14) VOLTS
SOLAR CELL SHORT CIRCUIT AMPS
SOLAR CELL OPEN CIRCUIT VOLTAGE
HELIUM TANK PRESSURE
FUEL TANK PRESSURE
DECK "H" SYNC OUTPUT
M/C ACCEL
GAMMA RAY (ALTIMETER ECHO STRENGTH)
SIG COND.
VIDICON
TRANSPONDER

Figure 3.1.1-1

a. Condition all measurements to the required levels.

b. Time multiplex at the proper rate those signals which are to be sampled.

c. Provide voltage rate limiting of the sampled data to a value consistent with the communication system design.

d. Provide synchronization signals to enable proper de-commutation on the ground.

e. Provide encoding for event and binary type information.

f. Provide proper modulation signals to the transponder.

g. Provide a modulation signal to the Agena telemetry system.

h. According to a pre-programmed plan, select data, which is to be telemetered only during some portions of the mission.

3.1.3 Subsystem Elements

To perform the functions listed in section 3.1.2, the Data Encoder subsystem must contain the following elements:

a. A signal conditioning system, including amplifiers and resistance bridges.

b. Data commutators.

c. Voltage rate limiters.

d. Voltage controlled and binary controlled oscillators and event encoders.

e. Modulation mixing and isolation circuitry.

f. A programmer to provide data selection during flight.

3.1.4 Operational Modes

The Data Encoder subsystem is required to have four data modes. These modes are selected by the CC&S according to a pre-programmed plan. The modes are programmed as follows:

a. Mode I - Launch to start of midcourse maneuver.

b. Mode II - Midcourse maneuver.

c. Mode III - Post midcourse maneuver to end of terminal maneuver.

d. Mode IV - Post terminal maneuver to lunar impact.

The measurements to be telemetered in the various modes are listed in Appendix IV of this Design Specification Book. The channel designation for commutated measurements is given by the following code:

Example 6 - A - 1

Channel Number

Commutator Deck

Commutator Segment

3.2 Detail Description

3.2.1 Channel Mechanization

The Data Encoder shall provide ten subcarrier channels in Modes I through III and three subcarrier channels in Mode IV.

3.2.1.1 Channel B-2, Modes I Through IV

This is a binary channel used to transmit serially encoded event information at a one bit per second rate. The nominal center frequency is 350 cps and the deviation is -1.2 cps. An event coder is used to add a distinctive address to events on each of four inputs.

3.2.1.2 Channel 1, Modes I Through IV

This is a measurement of the 400 cps clock frequency in the spacecraft. The frequency is transmitted as a subcarrier at 400 cps with a measurement range of ±15 cps. Since the commutator drive pulses are derived from this 400 cps clock, the channel 1 frequency is required by the ground decommutator to reconstruct the commutation rate.

3.2.1.3 Channel 2, Modes I Through III

Twenty-nine engineering measurements, nineteen time multiplexed at a one per second rate and ten multiplexed at a once per ten second rate shall be allocated to IRIG channel 2. The center frequency shall be 560 cps and the total deviation shall be ±25 cps. The multiplexed signal shall be acted upon by a rate limited amplifier to limit the maximum rate of change of the voltage controlled oscillator output to 185 cps/second and the maximum frequency excursion to a value no greater than ±50 cps from center frequency. The error of the reduced data at channel threshold shall be no more than ±5 percent of full scale.

3.2.1.4 Channel 3, Modes I Through III

Nineteen engineering measurements, nine time multiplexed at a one per second rate and ten multiplexed at a once per ten second rate shall be allocated to IRIG channel 3. The center frequency shall be 730 cps and the total deviation shall be ±25 cps. The multiplexed signal shall be acted upon by a rate limited amplifier to limit the maximum rate of change of the voltage controlled oscillator output to 185 cps/second and the maximum frequency excursion to a value no greater than ±50 cps from center frequency. The error of the reduced data at channel threshold shall be no more than ±5 percent of full scale.

3.2.1.5 Channel 4, Modes I Through III

Twenty-eight engineering measurements, eight time multiplexed at a once per ten second rate and twenty multiplexed at a once per hundred second rate shall be allocated to IRIG channel 4. The center frequency shall be 960 cps and the total deviation shall be ±37 1/2 cps. The multiplexed signal shall be acted upon by a rate limited amplifier to limit the maximum rate of change of the VCO output to 11.2 cps/second and the maximum frequency excursion to a value no greater than +130, and -56 cps from center frequency. The error of the reduced data at channel threshold shall be no more than ±5 percent of full scale.

3.2.1.6 Channels 5 and 6, Modes I Through III

Five engineering measurements each are assigned to IRIG channels 5 and 6. These measurements are multiplexed at a 25 per second rate. The center frequencies of channels 5 and 6 are 1.3 kc and 1.7 kc respectively. The deviations are ±60 cps for each channel. The error (2 sigma) of the reduced data at channel threshold shall be no more than ±15 percent of full scale.

3.2.1.7 Channel B-19, Modes I Through III

This is a binary channel used to transmit a distinctive waveform for synchronization of decommutated data. The distinctive waveform is derived from two decks of the data multiplexing switch. The nominal center frequency is 2.1 kc and the total deviation is 4.8 cps. The channel is capable of transmitting a binary waveform at a rate of four bits per second.

3.2.1.8 Channel B-20, Modes I Through III

This is a binary channel used to transmit two engineering measurements which are already coded in a binary form. The channel is capable of transmitting data at a rate of 2.5 bits per second. The nominal center frequency is 2.3 kc and the total deviation is -3.0 cps.

3.2.1.9 Channel 8, Modes I Through III

This is a binary channel used to transmit one engineering and one scientific measurement which are already in binary form. The channel is capable of transmitting data at a rate of 25 bits per second. The nominal center frequency is 3.0 kc and the total deviation is 18 cps.

3.2.1.10 Channel V, Mode IV

This is a channel used for both analog and binary scientific data. During data Mode IV the video, gamma ray and radio altimeter echo strength data are time multiplexed on this channel. The analog video data is transmitted for a 10 second period every 13 seconds. During every fourth 3 second gap, the gamma ray data is transmitted in binary form. During the last several 3 second gaps prior to capsule ignition, an analog measurement of radio altimeter echo strength is to be made. The spectral occupancy of this data is shown:

a. Video - 3.6 kc center frequency, ±1.4 kc deviation

b. Gamma Ray - 3.0 kc center frequency, ±0.7 kc deviation

c. Altimeter Echo Strength - 3.0 kc center frequency, ±0.7 kc deviation

4. POWER, CONTROL AND SIGNAL REQUIREMENTS

Regulated power and control signals are furnished by other spacecraft subsystems. The requirements for these items are given below:

4.1 Power

The regulated power requirements are given in table 4.1-1.

Table 4.1-1. Regulated Power Requirements

Voltage Volts DC	Absolute Voltage Limits	Stability Percent	Allowable Ripple MV(pk-pk)	Average Power Watts	Peak Power Watts
+28	±4 V	-	280	5.9	5.9
+20	±1 %	±1/2 %	200	3.0	4.0
-20	±1 %	±1/2 %	200	1.5	1.5
+6	±1 %	±1/2 %	60	0.6	1.0
-6	±1 %	±1/2 %	60	0.5	0.5
				Total	12.9 Watts

4.2 Control Signals

4.2.1 400 pps Frequency Reference

4.2.1.1 Characteristics of CC&S Pulse

a. Stability = 0.1 percent

b. Voltage = +6 VDC supplied by Data Encoder

c. CC&S Gate Resistance = open $\geq$ 100 k ohms
closed $\leq$ 60 ohms

d. Rise Time = $\leq$ 1.0 μ sec

e. Fall Time = $\leq$ 350 μ sec

f. Duration = 1.0 m sec

g. Waveform = see figure 4.2-1a.

4.2.2 25 pps Commutator Advance

4.2.2.1 Characteristics of CC&S Pulse

a. Stability = 0.1 percent to be derived directly from the 400 pps frequency reference

b. Voltage = +6 VDC supplied by Data Encoder

c. CC&S Gate Resistance = open $\geq$ 100 k ohms
closed $\leq$ 60 ohms

d. Rise Time = $\leq$ 1.0 μ sec

e. Fall Time = $\leq$ 350 μ sec

f. Duration = 1.0 m sec

g. Waveform = see figure 4.2-1b.

4.2.3 Mode Advance

4.2.3.1 Characteristics of CC&S Pulse

a. Voltage = +6 VDC supplied by Data Encoder

b. CC&S Gate Resistance = open $\leq$ 100 k ohms
closed $\leq$ 60 ohms

c. Noise Duration = $\leq$ 0.5 m sec

d. Fall Time = $\leq$ 350 μ sec

e. Duration = 1.0 m sec

f. Waveform = see figure 4.2-1c.

4.2.3.2 Characteristics of Command Subsystem Pulse

a. Voltage = +6 VDC supplied by Data Encoder
b. Contact Bounce = $\leq$ 250 μ sec
c. Duration = 150 ±50 m sec
d. Source Resistance = relay contacts, < 1 ohm
e. Waveform = see figure 4.2-1d.

4.2.4 Gamma Ray/Vidicon Data Commutator Pulses

4.2.4.1 Characteristics of CC&S Pulse

a. Voltage = +20 VDC supplied by Data Encoder
b. Noise Duration = $\leq$ 1.0 m sec
c. Duration = 10 sec/3 sec period
d. Source Resistance = relay contacts, < 1.0 ohm
e. Waveform = see figure 4.2-1e.

4.3 Signal Inputs

All measurement voltages are to be as defined in Appendix IV of this Design Specification Book in the column Data Encoder Input Range. The Data Encoder is to provide conditioning for all signals to encode them in a form suitable for modulation of the rf subsystem.

4.4 Signal Outputs

The Data Encoder shall provide signal outputs for rf modulation and ground test.

4.4.1 RF Modulation

The Data Encoder shall furnish an isolated composite mixed subcarrier signal to the rf subsystem. Each subcarrier amplitude shall be capable of being adjusted to provide the proper rf modulation indices.

4.4.2 Mixed Signal Test Output

An isolated composite mixed subcarrier signal shall be provided for ground test. This output shall be short-circuit proof in that a short on this output shall not affect the modulation to the rf subsystem. This output shall also be connected to the Agena telemetering system for modulation of their transmitter during the preinjection phase of the mission. The signal to the Agena transmitter shall be 1.50 volt rms into a load of 10 k ohms.

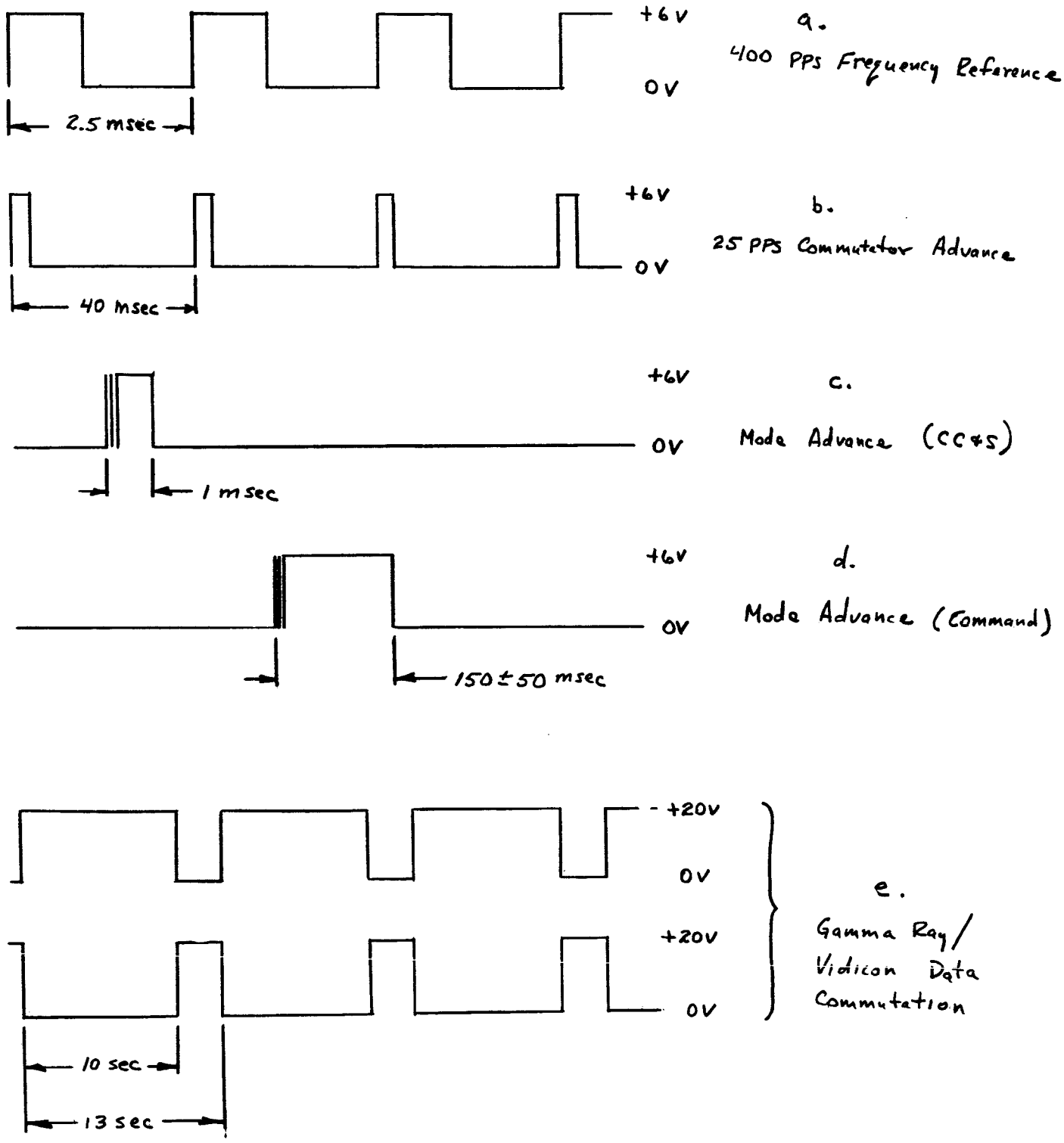

Figure 4.2-1. Control Signal Waveforms

4.4.3 Ground Test Outputs

Outputs shall be provided to enable ground control equipment to identify the position of and control the data commutator and to identify the data mode.

4.4.4 Mode Indicator

A measurement called tele mode indication, channel 3-F-6, is to be made and used as an indication of data modes during the mission. This system uses three discrete subcarrier frequencies as mode indicators. The nominal frequency and tolerance for each mode is given below:

	Subcarrier Frequency - cps	
Mode	Nominal Value	Tolerance
I	705	+8 -30
II	722	+8 -8
III	739	+8 -8
IV	None	-

5. CONSTRAINTS

5.1 Total Power Consumption

The total regulated power consumption shall be less than 12.9 watts.

5.2 Maximum Volume

The Data Encoder shall occupy no more than one standard spacecraft case.

5.3 Maximum Weight

The Data Encoder shall weigh no more than 31 pounds including case harness, case and all transducers but excluding a power converter. (Ref. Design Parameter Functional Specification, RA 345-4-120)

5.4 Environment

The Data Encoder shall operate within tolerances while subjected to the applicable portions of JPL Specification 30201.

2 July 1962

RANGER A3, A4, & A5 SPACECRAFT DESIGN SPECIFICATION BOOK

TABLE OF CONTENTS

Section	Title	Specification No.
I	INTRODUCTION (Purpose & Scope of Book)	RA345-1-110 A
II	MISSION OBJECTIVES & DESIGN CRITERIA	RA345-2-110 C
III	DESIGN CHARACTERISTICS & RESTRAINTS	
	Design Characteristics	RA345-3-110 H
	Design Restraints	RA345-3-120 F
IV	FUNCTIONAL SPECIFICATIONS	
	Systems (100 Series)	
	Postinjection Standard Trajectories (Supersedes RA345-4-111)	RA345-4-110 E
	Design Parameters & Reference Designations	RA345-4-120 F
	Cabling	RA345-4-130 A
	Lunar Capsule (Seismometer) & Radar Altimeter Subsystem	RA345-4-140
	Vehicle Integration	RA345-4-150
	Standards for Ranger TGSE (Superseded by RA-OSE-4-170)	RA12345-4-170
	Space Science (200 Series)	
	Television Subsystem	RA345-4-210 A
	Gamma Ray Spectrometer System	RA345-4-220 A
	Telecommunications (300 Series)	
	Telecommunication System	RA345-4-311
	Spacecraft Radio Subsystem (Supersedes RA12345-4-320 A, RA345-4-340, RA12345-4-360, and RA12345-4-370).	RA345-4-320 B
	Data Encoder Subsystem	RA345-4-321

RANGER A3, A4, & A5 SPACECRAFT

TABLE OF CONTENTS

(Continued)

Section	Title	Specification No.
IV	FUNCTIONAL SPECIFICATIONS (Continued)	
	Telecommunications (300 Series continued)	
	Spacecraft Command Subsystem	RA345-4-322 A
	Ground Telemetry Subsystem (Superseded by RA-OSE-4-330)	RA345-4-330
	Ground Command Subsystem (RWV) (Superseded by RA-OSE-4-331	RA345-4-331
	Radio and Ground Tracking Subsystem-DSIF (Superseded by RA-OSE-4-332)	RA345-4-332
	Ground Instrumentation Subsystem-DSIF (Superseded by RA-OSE-4-333)	RA345-4-333 A*
	Ground Communication Subsystem-DSIF (Superseded by RA-OSE-4-334)	RA345-4-334 *
	DSIF Operations (Superseded by RA-OSE-4-335)	RA345-4-335
	Command System	RA345-4-380
	Guidance and Control (400 Series)	
	Central Computer and Sequencer	RA345-4-410 C
	Attitude Control System	RA345-4-430 B
	Midcourse Guidance System	RA345-4-440
	Terminal Maneuver	RA345-4-450 A
	Power Subsystem	RA345-4-460 B
	Midcourse Autopilot	RA345-4-470 A

* Not Released

RANGER A3, A4, & A5 SPACECRAFT

TABLE OF CONTENTS

(Continued)

Section	Title	Specification No.
IV	FUNCTIONAL SPECIFICATIONS (Continued)	
	Engineering Mechanics (500 Series)	
	Structures	RA345-4-510 A
	Structural Design Criteria	RA345-4-511 B
	Pyrotechnic Subsystem	RA345-4-530 D
	Temperature Control System	RA345-4-540
	Propulsion (600 Series)	
	Midcourse Propulsion System	RA345-4-610 A
V	APPENDIX	
	Spacecraft Inboard Profile	RA345-Appendix I (Revision A)
	RA 3 Reference Designations (Superseded by RA345-4-120 E)	RA345-Appendix II (Revision D)
	Packaging of Electronic Equipment	RA345-Appendix III
	Telemetering Channel Assignments	RA345-Appendix IV (Revision A)

Additional copies of RA Specifications may be obtained from IDC.

For information regarding RA Specifications, call John Ryciak - Ext. 1179.

(Insert in Spacecraft Design Specification Book)

JET PROPULSION LABORATORY

Spec. No. RA345-1-110A

10 June 1960

INTRODUCTION

1.0 Purpose and Scope

The Spacecraft Design Specification Book will provide a single-volume source of information about the Ranger spacecraft program and will serve as a design tool and a control document defining the system in general terms. It will be used in the establishment of systems, subsystems, and over-all spacecraft design, and in the dissemination of design changes to all persons concerned with the program. Each segment of information in the book will be firm, to the extent possible at the time of publication. The book will not include information other than that covering spacecraft flight systems; such associated areas as ground support operations and scheduling will be specifically excluded. The value of the publication will depend upon its accuracy and timeliness. The coverage will be at the engineering level, condensed for ease of reference and to reduce the size of the book. A separate book will be issued for each spacecraft or group of spacecraft, as required. Following initial publication, the book will be kept up-to-date by the immediate issue of revised complete specifications containing corrections, deletions, or additions.

Each book will consist of three principal sections: 1) Mission Objectives and Design Criteria; 2) Design Characteristics and Restraints; and 3) Functional Specifications.

1.1 Mission Objectives and Design Criteria.

This section provides ground rules, guide lines, and a definition of the general design philosophy; it also establishes an order of priority among competing criteria. The material will include only design criteria that have been established at least on a preliminary basis, rather than a discussion of alternate methods. This section will not contain information on results of detail design planning or scheduling. This section will be the responsibility of the Project Office.

1.2 Design Characteristics and Restraints.

In general, this section explains how the design objectives will be met. All design restraints will be covered in this section, such as those resulting from the vehicle, packaging, environment, and scientific experiments. It is essentially a picture of the current spacecraft design, in sufficient detail so that functions of the systems and subsystems can be identified. Sections 1 and 2 of the book will provide an orderly progression for the preparation of the functional specifications of Section 3. Section 2 will also include general operational and configuration descriptions, sequences, and performance characteristics. Section 2 will be the responsibility of the Systems Division and will not include information on scheduling, detailed test procedures, or design mechanization.

1.3 Functional Specifications.

The functional specifications describe what the systems and subsystems are intended to do, in general terms, including all functions and interactions. They contain system and subsystem block diagrams, provide applicable transfer functions, describe the intended sequence of functions in operation of the spacecraft, allocate units of variance for error sources, and delineate system and subsystem boundaries in sufficient detail so that identification with cognizant design groups can be made and interface control maintained. Functional specifications should be written in engineering language for each system and subsystem and each must perform the following:

a. Define the boundaries of the system or subsystem.

b. Describe the functions that the system or subsystem performs.

c. Set the limits or tolerances within which the system or subsystem must perform.

d. Identify the input and output interaction elements so that the associated systems and subsystems can be designed.

The functional specifications will contain no information on schedules, test plans, detail component design, environmental suitability or qualification, or quality control. These functional specifications will be prepared by the cognizant groups in each area and reviewed by the Systems Division for compatibility before incorporation in the book.

1.4 Spacecraft Specification Numbering System.

1.4.1 Ranger spacecraft specifications will use a four-group coding as follows:

code group:	1	2	3	4
spec. No.:	RA	345 -	4 -	110

Code Group 1. Code group 1 identifies the spacecraft program. Thus, RA is for Ranger-Agena.

Code Group 2. For the Ranger-Agena program, this group indicates the individual spacecraft or combination of spacecraft covered in the subject publication. (RA)345 in the example specifies that book covering spacecraft RA3, RA4, and RA5.

Code Group 3. This group identifies the several sections of the book in which the specification would be inserted. In the example, the 4 indicates the functional specifications section.

Code Group 4. This three-digit group serves two purposes, identifying the specification by JPL divisions and by specification number. The first digit of the group represents the JPL organizational division, where 1 = Systems Division, 2 = Space Science, 3 = Telecommunications, 4 = Guidance and Control, 5 = Engineering Mechanics, and 6 = Propulsion. The last two digits indicate the specification number, starting at 10 and increasing in increments of 10 for each system, and in units for each subsystem. Thus, the number 110 indicates the specification is the responsibility of the Systems Division and is the first such specification in that division's series. The next specification that is a subsystem of 110 would be numbered 111, etc. The next system specification would be 120, then 130, etc.

1.5 Additional Copies.

For additional copies of any individual specification contained in this book, order by specification number from the Internal Distribution Center.

(Insert in Spacecraft Design Specification Book)

APPROVED:

Project Manager: J. B. Burke

JET PROPULSION LABORATORY

Spec. No. RA345-2-110 D

8 August 1962

SUPERSEDES:

RA345-2-110 C
19 December 1960

FUNCTIONAL SPECIFICATION
RANGER RA-3, RA-4 AND RA-5 SPACECRAFT
MISSION OBJECTIVES AND DESIGN CRITERIA

✱ DENOTES CHANGE

1.0 INTRODUCTION

✱ 1.1 The primary purpose of the first five Ranger flights is to develop certain basic elements of spacecraft technology required for lunar and interplanetary missions. These elements are as follows:

a. Spacecraft environment control.

b. Power.

c. Attitude control.

d. Communications.

e. Trajectory error correction.

f. Instrumentation techniques.

g. Data handling.

h. Understanding and solutions of problems caused by system interactions of all elements listed.

With present techniques, experiments on these elements of spacecraft technology demand a weight of several hundred pounds accelerated to excape energy and guided fairly precisely to the injection point. The Atlas-Agena B has been selected as the first U.S. vehicle expected to meet these requirements with reasonable reliability.

1.2 As a logical development step the Ranger flight series started with two firings of a simplified spacecraft having only the basic elements of structure, attitude control, power, and communications plus certain scientific instruments. The current series consists of three firings of a more elaborate spacecraft having the above elements with different instrumentation and with the addition of a trajectory error correction and a lunar capsule. The following paragraphs list the mission objectives and design criteria for the latter three flights.

1.3 Scientific experiments are an integral part of the planned program. The setting up of scientific objectives for each round forces the consideration of system interactions that would not otherwise be apparent, thereby aiding the development of kinds of equipment needed in the future. Scientific experiments on RA1 and RA2 were carried on a not-to-interfere basis; on RA345 they are the primary mission objective.

2.0 MISSION OBJECTIVES

2.1 Three flights are planned as repeated attempts at one set of objectives. Success in any flight will not necessarily be a reason for changing the objectives of later flights. The general objectives of Ranger flights 3, 4, and 5 are as follows:

a. To collect gamma-ray data both in flight and at the vicinity of the moon.

b. To obtain photographs of the surface of the moon.

c. To transmit, after landing, lunar seismic and temperature data to the extent practical.

d. To experiment with a trajectory error correction.

e. To experiment with a terminal attitude maneuver.

f. To continue development of basic spacecraft technology.

3.0 DESIGN CRITERIA

3.1 Design criteria applicable to the spacecraft for Ranger flights 3, 4, and 5 are described in the following subparagraphs.

3.1.1 Design of the basic spacecraft, or bus, was changed as little as possible relative to flights 1 and 2. It is imperative that flights 1 through 5 be used to build confidence in a basic spacecraft design that can be adapted to the interplanetary mission. Therefore, changes must be minimized.

3.1.2 Competing characteristics shall be treated in the following order:

a. Reliability of subsystems in order of importance as shown:

1) Tracking and trajectory determination.

2) Injection-phase power system and spacecraft separation devices.

3) Sun acquisition, pitch-yaw stabilization and associated failure detection telemetry.

4) Solar power system.

5) Temperature control.

6) Antenna erection, earth acquisition, roll stabilization.

7) Main telemetry system.

8) A class of subsystems of more or less equal importance, namely:

(a) Midcourse and terminal orientation system.

(b) Midcourse rocket and associated controls.

(c) Capsule subsystem.

9) Scientific instruments and data handling equipment.

b. Compatibility of subsystems with each other.

c. Schedule.

d. Contribution to technique for follow-on programs.

e. Biological sterility.

f. Preflight operational simplicity after leaving the spacecraft hangar.

g. Cost.

3.1.3 Defined Characteristics

a. Weight. The gross weight of the spacecraft is not listed above as a competing characteristic because its value will be fixed by available vehicle performance and the trajectory chosen. The desired approach to the weight problem is to try to minimize the weight of each component and then abandon plans to fly some components if necessary to reduce the total weight. If the spacecraft, with all desired components, is underweight, the performance excess will normally be taken in terms of an altered trajectory or increased propellant residuals to obtain higher reliability and/or greater accuracy of injection. Ballast will normally not be used unless required for balancing the spacecraft.

b. Effect on Agena B Stage. It is a general spacecraft design criterion that changes required on the Agena B relative to a standard, contemporary Air Force vehicle shall be held to the absolute

minimum necessary to achieve the mission. Reliability, cost, and schedule assurance are all involved in this decision; therefore, it is a most important constraint.

3.1.4 Experimental Philosophy Affecting Design

a. Environmental control prior to final mating with vehicle on launcher. The spacecraft and its components shall not be subjected to environments beyond flight-acceptance levels and the burden of protection shall be on operators and facilities rather than on the spacecraft itself. Clean, air-conditioned working areas, special handling fixtures, air transport, electrical overload protection, and other such measures external to the spacecraft shall be used to the extent practical, and the spacecraft design shall be based primarily on environments expected from the time of final mating onward through launching and flight. Biological sterility shall be achieved by external measures where possible, so that the adverse effect of the sterility requirement on equipment design, reliability and schedule is minimized.

b. Operating condition at launch. A list of contingencies will be prepared, under which decisions can be reached, in advance of the event, as to policy on holding, scrubbing, or launching with known inoperative components. In general, the design criterion should be that successful flight depends mainly on functional reliability of the subsystems from the end of hangar checkout onward, rather than on instrumentation, control, and correction of deficiencies in the spacecraft after mating with the launch vehicle. Atlas-Agena B operations require that the spacecraft function unattended for many hours before a shoot, and also for an hour or more after a late hold or scrub. During this period, instrumentation beyond normal telemetry and essential power-system controls is undesirable.

c. In-flight failure detection. In keeping with the main objectives of these firings, failure detection is desired on the basic functional systems. However, since the number of modes of failure exceeds the number of measurements available, an artful programming of the failure-detection system will be required to obtain unambiguous, reliable data, preferably from redundant sources, on vital elements without losing entirely the chance of detecting failures in less important (and possibly less reliable) elements. As a general criterion, the quality of failure detection available should more or less parallel the importance of the subsystems as given in paragraph 3.1.2 above.

Failure detection in the capsule subsystem shall not be provided beyond the capability afforded through functioning of the basic capsule instrumentation.

d. Function after in-flight failure. The general design criterion is that no subsystem is required to function after failures of subsystems on which it depends, except insofar as can be achieved without complicating the design or diverting effort from the main objectives of the flight.

In the event that the spacecraft is injected and functioning, but not on a trajectory that will take it to the moon, the experiment becomes another long-life, long-range test of the system; therefore, the attitude-control, power, and communications subsystems should be designed for this condition as far as is practical without compromising the primary lunar objective.

4.0 PRIORITY OF SCIENTIFIC EXPERIMENTS

Where a preference must be given in design, operations, or data handling, priority among the scientific experiments is as follows:

a. Gamma Ray Spectrometer

b. Television

c. Seismometer

5.0 TEST PHILOSOPHY AFFECTING DESIGN

In all areas where the design is influenced by the type of test program planned, the design criterion shall be that first preference is given to designs that can be analyzed, and that testing is resorted to primarily for the purpose of confirming analysis or resolving system interactions. When subsystem qualification tests are the only way of determining readiness for assembly and flight, the design must of course incorporate the necessary test provisions. In general, however, the objective is to obtain reliability by design rather than by testing. In system tests, the purpose is primarily to simulate flight operations. The burden of simulation shall, as far as possible, fall on equipment external to the spacecraft.

(Insert in Spacecraft Design Specification Book) APPROVED: M. R. Mesnard/SR.

JET PROPULSION LABORATORY

Spec. No. RA 345-3-110 H
10 April 1962

SUPERSEDES:
RA 345-3-110 G
5 January 1962

FUNCTIONAL SPECIFICATION
P34 (RA 3), P35 (RA 4) AND P36 (RA 5) SPACECRAFT
DESIGN CHARACTERISTICS

✱ DENOTES CHANGE

✱ 1.0 DESCRIPTION

✱ 1.1 Operational

The primary functional operations of the Ranger spacecraft include attitude control, power, communications, event sequencing and environmental control. Immediately after injection, the spacecraft is separated from the Agena propulsion stage. The Agena B will be retarded by a retro thrust to prevent its interference with normal operation of the spacecraft functions as well as eliminating the possibility of impacting on the Moon. The solar panels are erected and the communication antenna is rotated to a preset hinge angle. The attitude-control system is activated and solar sensors point the roll axis of the vehicle toward the Sun, thus placing the solar power system in operation. The vehicle then turns about the roll axis until the antenna beam points toward the earth. Upon earth acquisition by an optical sensor, which is mounted on and moves with the antenna, the high-gain communication link is established. The spacecraft then continues to coast with its roll axis pointed toward the Sun and its communication axis pointed toward the earth.

The midcourse maneuver accomplished by the spacecraft will correct for initial injection dispersions. After ground tracking and computation, the midcourse maneuver will be commanded from the Goldstone Tracking Site. The vehicle will turn to the prescribed angle in space, perform the correction of thrust, and then return to its Sun and earth orientation as before.

Sometime shortly prior to release of the lunar capsule, the spacecraft will be required to perform a terminal maneuver. This maneuver will aline a vidicon camera for high-resolution pictures of the moon, and will also orient the lunar landing capsule for its subsequent separation and retro-braking.

✱ 1.2 Configuration

The Ranger system utilizes an Atlas booster, or first stage, an Agena B second stage and the JPL Ranger spacecraft. The basic configuration of the Ranger 345 spacecraft consists of a hexagonal frame containing the electronics packages, the erectable solar-power panels, a separable lunar landing capsule containing equipment for experiments, and a movable parabolic communications antenna. Figures 2-1, 2-2, 2-3, 2-4, and 2-5, illustrate the basic configuration and major assemblies.

The Atlas/Agena vehicle configuration is described in the JPL Agena Study Report (Secret) to NASA Headquarters, Re-order No. 60-29.

✱ 2.0 APPLICABLE DOCUMENTS

✱ 2.1 The following documents form a part of this specification.

REPORTS

Jet Propulsion Laboratory

Re-order No. 60-29 JPL Agena Study Report (Secret)

3.0 SEQUENCES

3.1 General Description, Operational Sequence

3.1.1 RA 345 Operational Sequence (Figures 3.1-1 and 3.1-4)

a. In the launch mode the spacecraft is initially confined within the shroud. During the boost phases it must tolerate the environment of vibration, shock, and high temperature due to aerodynamic heating. After the Atlas sustainer burns out the shroud is ejected. After a brief Agena ignition and burn there is a coast period. There is a re-ignition and burn after which the spacecraft is separated from the Agena.

b. After separation the spacecraft goes into an acquisition operation. Solar panels and antenna are erected to a preset angle. The sun is then acquired. Until the sun is acquired, power is derived from a battery. The spacecraft then turns about the roll axis until the earth is acquired.

c. Maintaining the sun and earth attitude the machine goes into the cruising mode. If due to some unforeseen event such as meteoritic impact the solar lock is lost, the machine will go into an acquisition mode. Power is again sustained during this mode by a battery.

d. After a suitable tracking period, from the Goldstone Tracking Site, the required midcourse maneuver commands are computed at JPL and then sent to Goldstone. After checking, the midcourse maneuver commands are transmitted to the spacecraft.

e. Upon receipt of the start midcourse maneuver command (RTC-4) the central computer and sequencer assumes control of the vehicle. The vehicle assumes the commanded spacial attitude. The antenna for the high powered transmitter is rotated to the limit of its "out" position so as not to interfere with or be damaged by the midcourse motor flame. The motor is ignited and the proper incremental velocity vector correction made. During the motor thrust phase, attitude control is maintained by autopilot controlled jet-vane actuators.

f. Upon termination of the maneuver the acquisition sequence is commanded by the Central Computer and Sequencer. After acquisition of sun and earth the cruise mode is again sustained.

g. Approximately 65 minutes before lunar impact, the terminal maneuver is initiated. The three stored commands and the real time command required are computed at JPL and transmitted to Goldstone in the same fashion as the midcourse maneuver commands. The real time command, which starts the terminal maneuver, also initiates warm-up of the vidicon system.

h. Upon a signal from the radio altimeter the capsule will separate and determine its own ultimate destiny. The spacecraft bus will plunge into the lunar surface, its mission completed.

i. During all modes other than the cruise mode the power is supplied by the main battery.

3.1.2 These events occur within the various subsystems, but are generally initiated by the Central Computer and Sequencer. The details of the flight sequence necessary to the mission are tabulated in tables I and II.

3.1.3 The terminal maneuver will point the +Z axis of the spacecraft in the Terminal Pointing Direction (TPD), computed from tracking data. The TPD is defined as that direction in which the capsule retro-thrust must be pointed to obtain zero vector velocity of the capsule at retro-rocket burnout, if the altimeter fuzing signal occurs at the nominal altitude and the performance of the entire retro system is nominal. The TPD is very nearly parallel to the direction of the velocity vector of the bus at the nominal retro-rocket burnout altitude.

This maneuver will provide the required attitude for the spacecraft to perform the gamma-ray and vidicon experiments, and for capsule separation. The maneuver will be performed with a pitch, yaw, pitch sequence which will keep the high gain antenna continuously pointed toward Earth. Of the 65 minutes allowed for the terminal phase of the mission, the first 30 minutes will be required for a maximum terminal maneuver duration, the last 8.1 seconds will be required for the capsule separation and retro-maneuver. The remaining time will be available for the gamma-ray and vidicon experiments.

✱ 3.1.3.1 Sequence of Events for RA 345 Terminal Maneuver

a. The terminal maneuver will be initiated by ground command 65 minutes before impact.

b. The relay closure that stops pitch in the terminal maneuver (SC-6) will actuate the altimeter antenna and deploy the omni-antenna structure. A 2-minute delay will be used to allow pitch stabilization prior to deployment of the radio altimeter antenna and a 2 1/2-minute delay prior to omniantenna deployment.

c. The CC&S will supply a timed signal to the squib firing assembly which will turn on the altimeter. A back-up real-time command (RTC-7) will be used for emergency or reliability.

d. The command that initiates terminal maneuver (RTC-6) will also execute vidicon turn-on.

NOTE: Two 'clear' commands shall be transmitted prior to the transmission of any group of real or stored commands throughout the mission. A 'clear' command is termed RTC-0 and has the format 1-00000-000000000000.

e. A receiver at the Goldstone site will be used to track the capsule transmitter after deployment of the omniantenna. Refer to figures 3.1.3.1-1 through 3.1.3.1-6. It is a design request that the capsule transmitter be tracked through retro-braking and free-fall to capsule lunar impact.

3.1.4 At approximately 21.4 km (70,200 ft) above the surface of the Moon, the lunar capsule experiment is launched. No useful bus data (such as vidicon and gamma-ray data) can be depended upon after capsule separation.

3.2 Measurements and Command Link

3.2.1 Midcourse and Terminal Guidance Instrumentation

a. There are certain absolutely necessary data from RA 345 which must be obtained to evaluate spacecraft performance during midcourse and terminal maneuvers. Specific details will be covered in the appropriate functional specifications.

b. As noted in the flight sequence, the midcourse and terminal maneuver commands are based upon tracking and trajectory computations. The computations are made at JPL and sent to Goldstone, where, after suitable checking, the maneuver commands are transmitted as a group of three words to the spacecraft which are stored in the CC&S. The time between words is to be as short as practicable. The stored commands will be issued approximately 1/2 hour before the execute command. The real-time execute command must start within ±5 minutes of the required time for the midcourse maneuver; ±39.4 seconds for the terminal maneuver.

c. No retransmission of the maneuver commands for the purpose of checking the reception of the command is required. However, telemetry required to evaluate the command system will be incorporated.

d. A second mode of data handling is required to adequately record the action of spacecraft guidance and control during midcourse and terminal maneuvers. Information of this nature includes gyro signals, midcourse jet vane angles, antenna hinge angle, critical motor temperatures and tank pressures and times that events occur, such as motor shutoff time. Additional information of accelerometer integration as a function of time is highly desirable, but not absolutely mandatory. Antenna hinge angle and gyro signals are needed throughout the flight at normal data rates.

3.2.2 The measurements are in essentially three categories: (excluding the scientific measurements).

a. Measurements which provide data required in near real time to perform the operation.

b. Measurements which will help evaluate the design by providing a quantitative measure of the accuracy of the systems performance in the flight environment.

c. Failure isolation (diagnostic) measurements.

3.2.3 Priorities for measurements on RA 345 (excluding scientific measurements) are as follows:

a. Measurements required for the operation (e.g., Central Computer and Sequencer clock speed, command receiver phase error).

b. Measurements in category b. above which apply to the new engineering experiments (e.g., antenna hinge angle, rate gyros, midcourse jet vane angles, tank pressures).

c. Measurements in category c. above which apply to the new engineering experiments (e.g., received command, rate gyros, accelerometers, integrator, antenna hinge angle, jet vane angles, tank pressures).

3.2.4 Measurement Objectives

The specific objectives of the measurements requested are:

a. Maneuver

1) Ability of the AC system to properly orient the spacecraft for the maneuvers and to control its attitude during the midcourse maneuver by means of the jet vane actuators.

2) Ability of the AC system to reacquire after the midcourse maneuver.

3) Accuracy of applying the maneuvers (mainly determined from the change in trajectory).

4) Cause of errors in the maneuvers, i.e., isolate between AC, motor, and rf command.

5) Ability of maintaining tank pressure in the space environment.

b. Performance of temperature control system.

c. Evaluation of the performance of the solar panels and the power system.

d. Evaluation of the range and reliability of the communication system.

e. Investigation of the environment.

4.0 PERFORMANCE CHARACTERISTICS

4.1 Constraints

The lunar impact trajectories for RA 3, 4, and 5, should satisfy certain constraints. The constraints and their source of origin are:

a. Attitude Control. Earth-probe-Sun angle of 90° ±50° after injection.

b. Scientific Mission. Lighting angle of about >20° to <70°. (The lighting angle indicates the amount of shadows seen on the lunar surface by the spacecraft observer. It is defined as the angle between the moon-sun line and the moon-probe line, or the sun-moon-probe angle).

c. Tracking.

1) Deep Space. The spacecraft will cross near the Goldstone Meridian at lunar encounter.

2) Injection Tracking and Telemetry. The launch azimuth shall be such that injection trajectory is visible from AMR tracking and telemetry sites, most of the time.

3) Omniantenna. The pattern of the RA 345 design omniantenna is such that the earth-probe-sun angle must be kept to 90° ±35° after sun acquisition and before transfer to the high-gain antenna and also at the time of transfer to omni prior to midcourse maneuver.

d. Power and Thermal Control. The spacecraft will not be in the earth's shadow after injection any longer than is necessary to meet the other constraints listed.

4.2 Guidance System

4.2.1 The guidance system will have three distinct modes of operation; they are:

a. Acquisition of sun and earth

b. Cruise

c. Maneuver

Each one of these modes will occur twice during flight.

4.2.2 The initial acquisition of sun and earth occurs soon after injection. The sun acquisition consists of establishing the roll axis of the spacecraft along the sun-probe line, such that the -Z axis points toward the sun. The plane of the solar panels is perpendicular to the roll axis; consequently the panels face the sun. The initial acquisition of the sun should be in accordance with tables I and II. The roll axis should be established along the sun-probe line within ±1°. Earth acquisition consists of directing the parabolic antenna along the earth-probe line. This should be accomplished within four hours of launch. The pointing of the antenna should be within ±2° of the earth-probe line.

4.2.3 The cruise mode is established after four hours and the pointing accuracies in 4.2.2 should be maintained throughout this mode.

4.2.4 The first maneuver mode, the midcourse maneuver, will be performed if tracking of the spacecraft indicates that the trajectory it is following will not comply with the constraints outlined in paragraph 4.1. In the likely event that trajectory correction is required, the necessary velocity magnitude and direction will be computed and commanded from the ground. Ground command capability exists only at the Goldstone Tracking Site for RA 3. This establishes that the maneuver must occur while the spacecraft is in view of Goldstone.

4.2.5 The tracking, command, and execution of command will be sufficiently accurate to establish the location of the impact point to within 40 km (RMS). The time of flight variation shall be minimized, subject to the constraint that the included angle between spacecraft roll axis and Earth-probe line shall be greater than 55°. This constraint arises from the directional properties of the low gain antenna and prevents loss of engineering telemetry during the maneuver.

4.2.6 The midcourse maneuver will occur at least five hours after Goldstone acquisition of the spacecraft to allow sufficient time for tracking, error computation, ground command, and execution of maneuver; and will be completed at least one hour prior to loss of Goldstone acquisition to allow time for post maneuver tracking.

4.2.7 Upon completion of the firing of the midcourse rocket, the spacecraft will then automatically reacquire the sun and earth, thus regaining the cruise mode.

4.2.8 The required commands for the terminal maneuver will be computed at the JPL central computing facility and transmitted from the Goldstone Tracking Site.

4.2.9 The terminal maneuver will begin 65 minutes before spacecraft lunar impact as determined from tracking data, so that the spacecraft has had sufficient time to complete the terminal maneuver, deploy the vidicon lens cover, omni and altimeter antennas and establish a stabilized attitude before the first mandatory vidicon picture at 4,000 km, approximately 32 minutes before lunar impact. The roll axis will be aligned along the Terminal Pointing Direction (TPD) (defined in section 3.1.3). The RMS error between the capsule thrust vector and the TPD must be less than 1°. Contributing errors are as follows:

a. Tracking errors in determination of TPD.

b. Pointing error of attitude control system in aligning spacecraft roll axis with the Terminal Pointing Direction, as determined from tracking data.

c. Computational errors.

4.3 Antennas

4.3.1 The omniantenna system will approximate an omnicoverage for reception and transmission.

4.3.2 A high-gain antenna will be used for attitude dependent communications. A servo system operating at a hinged point on the basic structure in conjunction with the roll attitude control will provide the beam pointing function.

4.4 Communications

4.4.1 Transponder

4.4.1.1 The transponder shall consist of an extremely narrow band, double superheterodyne, automatic, phase tracking receiver operating at approximately 890 mc, and an integrally related transmitter operating at approximately 960 mc. It shall be transistorized with the exception of the transmitter cavity power amplifier stages. The unit shall correlate maximum long term reliability, minimum power consumption, and minimum weight with the required electrical performance. The transponder shall be used for space vehicle communications. Its functions include telemetering engineering and scientific information, doppler range and velocity measurements, and earth to spacecraft command reception.

4.4.1.2 Doppler data reception must be available from lift-off.

4.4.1.3 Power will be supplied from the spacecraft basic power system.

4.5 Scientific Experiments

4.5.1 Gamma-ray Spectrometer

4.5.1.1 The gamma-ray spectrometer and attendant electronics shall be capable of measuring gamma-ray radiation in cis-lunar and near lunar space.

4.5.1.2 The spectrometer must be capable of being mounted on an extendable boom and withstand the resultant environment. Power will be applied prior to the time the boom is extended to allow for background radiation measurements.

4.5.2 Vidicon Camera

The vidicon camera shall be capable of taking and scanning (for purposes of telemetry) pictures of the visible lunar surface from a lunar altitude of not less than 3,500 km to lunar impact. The vidicon system shall have a resolution compatible with a 200 line scan, adequate telescope, shutter time, etc., such as to exceed that resolution available from the best earth range astronomical lunar photographs when the vidicon is operated below 3,500 km lunar altitude.

4.6 Lunar Survival Capsule System

4.6.1 Lunar Survival Sphere and Impact Limiter

4.6.1.1 The impact limiter shall be capable of protecting the lunar survival (instrumented) sphere from damage after a lunar gravity free-fall of 2,000 feet (maximum) with no initial velocity. The impact limiter must provide attachments for the spacecraft's omniantenna and the capsule's retro-motor.

4.6.1.2 The instrumented survival sphere shall contain an L-band transmitter operating at approximately 960 mc with a power output of not less than 25 mw and an information bandwidth of not less than 5 cps. It shall also contain an antenna system, adequate thermal control, a power source sufficient to sustain operations for no less than 30 days on the lunar surface and a seismometer experiment. The system must be capable of orienting its antenna pattern toward earth and must be capable of detecting and transmitting lunar seismic disturbances.

4.6.2 Capsule Retro-motor

4.6.2.1 The retro-motor shall be capable of removing (braking) the total capsule weight from the velocity imparted to it by the spacecraft at the time of capsule separation. This velocity must be completely removed when the entire capsule is no greater than 2,000 feet above the lunar surface.

4.6.2.2 The retro-motor shall contain a spin mechanism capable of spinning the entire capsule up to a rotational speed sufficient to gyro stabilize the capsule prior to the application of retro-braking.

4.6.2.3 The retro-motor shall contain a sequencing device for adequately timing the spin-up and retro-braking operations. It shall also provide sufficient power for the operation of this device.

4.6.2.4 The retro-motor shall provide an attachment device for the impact limiter and for attachment to the support structure. The retro-motor may separate from lunar survival sphere-impact limiter combination at the completion of the retro-braking maneuver.

4.6.2.5 The retro-motor shall provide adequate launching pad-range safety in its design by JPL definition.

4.6.2.6 The retro-motor shall provide means for mounting lunar seismic grenades if the mission so warrants. Seismic calibration grenades may be attached to the retro-motor (for subsequent detachment and detonation on the lunar surface) on RA 5 only.

4.6.3 Capsule Support Structure

A support structure capable of supporting the weight of the entire capsule assembly under all expected environmental conditions must be provided. The structure will also contain all necessary wiring, a mechanism for attachment to and release of the retro-motor and must be compatible with the spacecraft mechanical interface.

4.6.4 Radio Altimeter

The radio altimeter must be designed to radiate energy to and receive its own radiation from the lunar surface for the purpose of determining the correct altitude for separation of the lunar capsule. The altimeter will be the only means for separating the capsule from the bus. The altimeter may operate in X-band, have a pulse repetition rate not to exceed

600 pps and a peak power sufficient to accomplish the above requirements. A means of generating a dc signal that is directly proportional to received energy shall be provided for the purpose of telemetering this information to earth. The altimeter will be initiated by a command from the spacecraft. It shall be capable of being deployed from a stowed position such as to be pointed at the lunar surface. An adequate support structure shall be provided capable of withstanding all expected environments. A junction box capable of exchanging all signals necessary to meet the altimeter-capsule-spacecraft electrical interface shall be provided.

Table I

A = Time of Launch
B = Time of Mid-Course Maneuver Start
C = Time of Terminal Maneuver Start
D = Time of Capsule Timer Start
I = Time of Injection

RA-3 FLIGHT SEQUENCE

1st Quarter 1962

96° Launch Azimuth

*Varies with launch azimuth and/or time of launch; see EPD No. 55

STEP	FUNCTION	1st Day	2nd Day	3rd Day	4th Day	Time	Source
	A. INJECTION AND CRUISE						
1	Admit timing pulses to T/M (Mode I)	A-45	A-45	A-45	A-45	Min.	Command-Blockhouse
2	Transfer to internal power	A-5	A-5	A-5	A-5	Min.	Command-Blockhouse
3	Start CCS counter	A-2	A-2	A-2	A-2	Min.	Command-Blockhouse
4	Lift-off from AMR	A-0	A-0	A-0	A-0	A	Event-Blockhouse
5	Transmitter power up	A+23	A+23	A+23	A+23	Min.	CCS Command
6	Spacecraft injection *(MAX) Retro Agena stage	A+24	A+22	A+20	A+18	I Min.	Timer-Agena
7	Unfold solar panels	A+31	A+31	A+31	A+31	Min.	CCS Command
8	Apply attitude control D.C. for sun acquisition a. Extends high-gain antenna to pre-set angle b. Activates gas jet system c. Activates sun sensor system d. Commence solar acquisition	A+34	A+34	A+34	A+34	Min.	CCS Command
9	Spacecraft leaves earth shadow *(MAX)	I+0	I+6	I+15	I+17	Min.	Event
10	Sun acquisition complete	A+64	A+64	A+64	A+64	Min.	Event - Attitude Control
11	Apply attitude control 1ϕ, 400 cps for earth acquisition a. Activate earth sensor system b. Starts roll search command	A+3.5	A+3.5	A+3.5	A+3.5	Hr.	CCS Command
12	Earth sensor attains light signal a. Stops roll search b. Starts hinge servo	≥A+3.5	≥A+3.5	≥A+3.5	≥A+3.5	Hr.	Event - Attitude Control
13	Earth acquisition complete	A+4	A+4	A+4	A+4	Hrs.	Event - Attitude Control
14	Turn on gamma-ray system, initiate timing pulses	A+4	A+4	A+4	A+4	Hrs.	CCS Command
15	Spacecraft rises on Goldstone horizon *	A+12.5	A+12.3	A+12.0	A+11.8	Hrs.	Event-Tracking

Table I (Continued)

STEP	FUNCTION	1st Day	2nd Day	3rd Day	4th Day	Time	Source
16	Roll and hinge override (as necessary) Resume search	>A+12.5	>A+12.3	>A+12.0	>A+11.8	Hrs.	Ground Command RTC-1, 2
17	Switch 3-watt system from omni to Directional Antenna	>A+ 12.5	>A+12.3	>A+12.0	>A+11.8	Hrs.	Ground Command RTC-3
	B. MID-COURSE MANEUVER						
18	Complete mid-course tracking and correction computation. Transmit mid-course maneuver roll and pitch duration and impulse magnitude. If tracking or error computation is inadequate at this time, add 24 hours to B.	A+15.5 (Nominal)	A+15.5 (Nominal)	A+15.5 (Nominal)	A+15.5 (Nominal)	Hrs.	Ground Command SC-1, 2, 3
19	Initiate mid-course maneuver sequence, T/M Mode II	A+ 16	A+16	A+16	A+16	Hrs.(B)	Ground Command RTC-4
20	Switch 3-watt transmitter to omni antenna	B+0	B+0	B+0	B+0	Min.	Ground Command RTC-3
21	Turn on mid-course autopilot, jet vane actuators, and accelerometer. Turn off earth sensor system (1ϕ, 400 cps). Connect roll channel capacitor, initiate command polarity, command roll, angle turn (provide antenna exit).	B+ 5 sec.	B+5 sec.	B+5 sec.	B+5 sec.	Sec.	CCS Command
22	Telemetry mode change backup (if needed)	>B+0	>B+0	>B+0	>B+0	Min.	Ground Command RTC-5
23	Stop roll angle turn, switch to pitch channel	B+5 to B+455	B+5 B+455	B+5 B+455	B+5 B+455	Sec.	CCS Command
24	Switch out sun sensors signals, connect pitch and yaw channel capacitors, initiate command polarity, command pitch angle turn.	B+9.5	B+9.5	B+9.5	B+9.5	Min.	CCS Command
25	Stop pitch angle turn.	B+9.5 to B+24.5	B+9.5 to B+24.5	B+9.5 to B+24.5	B+9.5 to B+24.5	Min.	CCS Command
26	Command mid-course motor ignition.	B+26.5	B+26.5	B+26.5	B+26.5	Min.	CCS Command
27	Command mid-course motor shut-off.	B+26.5 to B+27.6	B+26.5 to B+27.6	B+26.5 to B+27.6	B+26.5 to B+27.6	Min.	CCS Command
28	Turn off mid-course autopilot, motor actuators, and accelerometer; provide antenna reposition, commence solar acquisition. Initiate T/M Mode III	B+28	B+28	B+28	B+28	Min.	CCS Command
29	Telemetry mode change backup (if needed)	>B+28	>B+28	>B+28	>B+28	Min.	Ground Command RTC-5

Table I (Continued)

STEP	FUNCTION	1st Day	2nd Day	3rd Day	4th Day	Time	Source
30	Sun re-acquisition complete	B+58	B+58	B+58	B+58	Min.	Event - Attitude Control
31	Apply attitude control 1Ø, 400 cps a. Activate earth sensor system b. Starts roll search command	B+58	B+58	B+58	B+58	Min.	CCS Command
32	Earth sensor attains light signal a. Stops roll search b. Starts hinge servo	≥B+58	≥B+58	≥B+58	≥B+58	Min.	Event - Attitude Control
33	Roll and hinge override (as necessary) Resume search	>B+58	>B+58	>B+58	>B+58	Min.	Ground Command RTC-1, 2
34	Earth re-acquisition complete	B+88	B+88	B+88	B+88	Min.	Event - Attitude Control
35	Switch 3-watt transmitter to directional antenna	B+88	B+88	B+88	B+88	Min.	Ground Command RTC-3
36	3-watt system switched to directional antenna (backup); extend gamma-ray boom	B+2.5	B+2.5	B+2.5	B+2.5	Hrs.	CCS Command
37	Spacecraft sets on Goldstone horizon	A+23.7	A+23.1	A+22.5	A+21.8	Hrs.	Event - Tracking
38	Spacecraft rises on Goldstone optical horizon	A+36.8	A+36.1	A+35.4	A+35.0	Hrs.	Event - Tracking
	C. TERMINAL MANEUVER (See Figures 1, 2, & 3)						
39	Complete terminal tracking and computation, transmit turn duration (pitch-yaw-pitch) information	A+64.6 (Nominal)	A+64.1 (Nominal)	A+63.5 (Nominal)	A+62.6 (Nominal)	Hrs.	Ground Command SC-4, 5, 6
40	Initiate terminal maneuver sequence * *	A+65.1	A+64.6	A+64.0	A+63.1	Hrs.(C)	Ground Command RTC-6
41	Turn on vidicon system (warmup)	C+0	C+0	C+0	C+0		Ground Command RTC-6
42	Select terminal mode, switch out sun sensor signals, connect pitch and yaw channel capacitors, initiate command polarity, command pitch angle turn	C+5	C+5	C+5	C+5	Sec.	CCS Command
43	Stop pitch angle turn, switch to yaw channel	C+5 to C+455	C+5 to C+455	C+5 to C+455	C+5 to C+455	Sec.	CCS Command
44	Initiate command polarity, command yaw angle turn	C+9.5	C+9.5	C+9.5	C+9.5	Min.	CCS Command
45	Stop yaw angle turn, switch to pitch channel	C+9.5 to C+19.5	C+9.5 to C+19.5	C+9.5 to C+19.5	C+9.5 to C+19.5	Min.	CCS Command
46	Initiate command polarity, command pitch angle turn	C+21.5	C+21.5	C+21.5	C+21.5	Min.	CCS Command

Table I (Continued)

STEP	FUNCTION	1st Day	2nd Day	3rd Day	4th Day	Time	Source
47	Stop pitch angle turn, initiate vidicon pulse train. Initiate T/M Mode IV. Initiate altimeter antenna and vidicon lens cover deploy timer (2 min.) and omni-antenna deploy timer (2-1/2 min.)	C+21.5 to C+29	C+21.5 to C+29	C+21.5 to C+29	C+21.5 to C+29	Min.	CCS Command
48	Telemetry Mode change backup (if needed)	C+25 to C+35	C+25 to C+35	C+25 to C+35	C+25 to C+35	Min.	Ground Command RTC-5
49	Turn on radio altimeter (approximately 158 km)	Bus Impact-60	Bus Impact-60	Bus Impact-60	Bus Impact-60	Sec.	CCS Command
50	Transmit radio altimeter backup	Bus Impact-50	Bus Impact-50	Bus Impact-50	Bus Impact-50	Sec.	Ground Command (backup) RTC-7
51	Capsule timer starts		70,000 Feet Lunar Altitude			D	Altimeter Fusing Event (Altitude)
52	Retro motor fires	D+2	D+2	D+2	D+2	Sec.	Event
53	Retro motor burnout	D+12	D+12	D+12	D+12	Sec.	Event
54	Capsule impact	D+32	D+32	D+32	D+32	Sec.	Event

** Bus impact minus 65 minutes.

Table II

A = Time of Launch
B = Time of Midcourse Maneuver Start
C = Time of Terminal Maneuver Start
D = Time of Start of Capsule Timer
I = Time of Injection

RA-4 FLIGHT SEQUENCE

2nd Quarter 1962

96° Launch Azimuth

* Varies with launch azimuth and/or time of launch; see EPD No. 56

STEP	FUNCTION	1st Day	2nd Day	3rd Day	4th Day	Time	Source
	A. INJECTION AND CRUISE						
1	Admit timing pulses to T/M (Mode I)	A-45	A-45	A-45	A-45	Min.	Command-Blockhouse
2	Transfer to internal power	A-5	A-5	A-5	A-5	Min.	Command-Blockhouse
3	Start CCS Counter	A-2	A-2	A-2	A-2	Min.	Command-Blockhouse
4	Lift-off from AMR	A-0	A-0	A-0	A-0	A	Event-Blockhouse
5	Transmitter power up	A+23	A+23	A+23	A+23	Min.	CCS Command
6	Spacecraft injection * Retro Agena stage	A+15.2	A+16.4	A+18.1	A+20.2	I Min.	Timer-Agena
7	Unfold solar panels	A+31	A+31	A+31	A+31	Min	CCS Command
8	Apply attitude control D.C. for sun acquisition a. Extends high-gain antenna to pre-set angle b. Activates gas jet system c. Activates sun sensor system d. Commence solar acquisition	A+34	A+34	A+34	A+34	Min.	CCS Command
9	Spacecraft enters earth shadow *	A+18.3	A+16.0	A+14.6	A+13.5	Min.	Event
10	Spacecraft leaves earth shadow *	A+57.7	A+54.4	A+45.6	A+42.3	Min.	Event
11	Sun acquisition complete	A+87.7	A+84.4	A+75.6	A+72.3	Min.	Event-Attitude Control
12	Apply attitude control 1Ø, 400 cps for earth acquisition a. Activates earth sensor system b. Starts roll search command	A+3.5	A+3.5	A+3.5	A+3.5	Hr.	CCS Command
13	Earth sensor attains light signal a. Stops roll search b. Starts hinge servo	≥A+3.5	≥A+3.5	≥A+3.5	≥A+3.5	Hr.	Event-Attitude Control
14	Earth acquisition complete	A+4	A+4	A+4	A+4	Hrs.	Event-Attitude Control
15	Turn on gamma-ray system, initiate timing pulses	A+4	A+4	A+4	A+4	Hrs.	CCS Command
16	Spacecraft rises on Goldstone horizon	A+11.8	A+11.6	A+11.3	A+11.1	Hrs.	Event-Tracking

Table II (Cont'd)

STEP	FUNCTION	1st Day	2nd Day	3rd Day	4th Day	Time	Source
17	Roll and hinge override (as necessary) Resume search	>A+11.8	>A+11.6	>A+11.3	>A+11.1	Hrs.	Ground Command RTC-1, 2
18	Switch 3-watt system from omni to Directional Antenna	>A+11.8	>A+11.6	>A+11.3	>A+11.1	Hrs.	Ground Command RTC-3
	B. MID-COURSE MANEUVER						
19	Complete mid-course tracking and correction computation. Transmit mid-course maneuver roll and pitch duration and impulse magnitude. If tracking or error computation is inadequate at this time, add 24 hours to B.	A+15.5 (Nominal)	A+15.5 (Nominal)	A+15.5 (Nominal)	A+15.5 (Nominal)	Hrs.	Ground Command SC-1, 2, 3
20	Initiate mid-course maneuver sequence, T/M Mode II	A+16	A+16	A+16	A+16	Hrs. (B)	Ground Command RTC-4
21	Switch 3-watt transmitter to omni-antenna	B+0	B+0	B+0	B+0		Ground Command RTC-3
22	Turn on mid-course autopilot, jet vane actuators, and accelerometer. Turn off earth sensor system (1Ø, 400 cps). Connect roll channel capacitor, initiate command polarity, command roll, angle turn (provides antenna exit).	B+5	B+5	B+5	B+5	Sec.	CCS Command
23	Telemetry mode change backup (if needed)	>B+0	>B+0	>B+0	>B+0		Ground Command RTC-5
24	Stop roll angle turn, switch to pitch channel	B+5 to B+455	B+5 to B+455	B+5 to B+455	B+5 to B+455	Sec.	CCS Command
25	Switch out sun sensors signals, connect pitch and yaw channel capacitors, initiate command polarity, command pitch angle turn.	B+9.5	B+9.5	B+9.5	B+9.5	Min.	CCS Command
26	Stop pitch angle turn.	B+9.5 to B+24.5	B+9.5 to B+24.5	B+9.5 to B+24.5	B+9.5 to B+24.5	Min.	CCS Command
27	Command mid-course motor ignition.	B+26.5	B+26.5	B+26.5	B+26.5	Min.	CCS Command
28	Command mid-course motor shut-off.	B+26.5 to B+27.6	B+26.5 to B+27.6	B+26.5 to B+27.6	B+26.5 to B+27.6	Min.	CCS Command
29	Turn off mid-course autopilot, motor actuators, and accelerometer; provide antenna reposition, commence solar acquisition. Initiate T/M Mode III.	B+28	B+28	B+28	B+28	Min.	CCS Command

Table II (Cont'd)

STEP	FUNCTION	1st Day	2nd Day	3rd Day	4th Day	Time	Source
30	Telemetry mode change backup (if needed).	>B+28	>B+28	>B+28	>B+28	Min.	Ground Command RTC-5
31	Sun re-acquisiton complete.	B+58	B+58	B+58	B+58	Min.	Event-Attitude Control
32	Turn on attitude control 10,400 cps. a. Activated earth sensor system. b. Starts roll search command.	B+58	B+58	B+58	B+58	Min.	CCS Command
33	Earth sensor attains light signal. a. Stops roll search. b. Starts hinge servo.	>B+58	>B+58	>B+58	>B+58	Min.	Event-Attitude Control
34	Roll and hinge override (as necessary). Resume search	>B+58	>B+58	>B+58	>B+58	Min.	Ground Command RTC-1, 2
35	Earth re-acquisition complete.	B+88	B+88	B+88	B+88	Min.	Event-Attitude Control
36	Switch 3-watt transmitter to directional antenna.	B+88	B+88	B+88	B+88	Min.	Ground Command RTC-3
37	3-watt system switched to directional antenna (backup); extend gamma-ray boom.	B+2.5	B+2.5	B+2.5	B+2.5	Hrs.	CCS Command
38	Spacecraft sets on Goldstone horizon.	A+23.7	A+23.1	A+22.5	A+21.8	Hrs.	Event-Tracking
39	Spacecraft rises on Goldstone optical horizon.	A+36.8	A+36.1	A+35.4	A+35.0	Hrs.	Event-Tracking
	C. TERMINAL MANEUVER (SEE FIGURES 4 & 5)						
40	Complete terminal tracking and computation, transmit turn duration (pitch-yaw-pitch) information.	A+63.4 (Nominal)	A+62.7 (Nominal)	A+61.9 (Nominal)	A+61.1 (Nominal)	Hrs.	Ground Command SC-4, 5, 6
41	Initiate terminal maneuver sequence. **	63.9	63.2	62.4	61.6	Hrs. (C)	Ground Command RTC-6
42	Turn on vidicon system (warmup).	C+0	C+0	C+0	C+0		Ground Command RTC-6
43	Select terminal mode, switch out sun sensor signals, connect pitch and yaw channel capacitors, initiate command polarity, command pitch angle turn.	C+5	C+5	C+5	C+5	Sec.	CCS Command
44	Stop pitch angle turn, switch to yaw channel	C+5 C+455	C+5 C+455	C+5 to C+455	C+5 to C+455	Sec.	CCS Command
45	Initiate command polarity, command yaw angle turn	C+9.5	C+9.5	C+9.5	C+9.5	Min.	CCS Command
46	Stop yaw angle turn, switch to pitch channel	C+9.5 to C+19.5	C+9.5 to C+19.5	C+9.5 to C+19.5	C+9.5 to C+19.5	Min.	CCS Command

Table II (Cont'd)

STEP	FUNCTION	1st Day	2nd Day	3rd Day	4th Day	Time	Source
47	Initiate command polarity, command pitch angle turn.	C+21.5	C+21.5	C+21.5	C+21.5	Min.	CCS Command
48	Stop pitch angle turn, initiate vidicon pulse train, initiate T/M Mode IV. Initiate altimeter antenna and vidicon lens cover deploy timer (2 minutes) and omniantenna deploy timer (2 1/2 min.).	C+21.5 to C+29	C+21.5 to C+29	C+21.5 to C+29	C+21.5 to C+29	Min.	CCS Command
49	Telemetry Mode change backup (if needed).	C+25 to C+35	C+25 to C+35	C+25 to C+35	C+25 to C+35	Min.	Ground Command RTC-5
50	Turn on radio altimeter (approximately 158 km).	Bus Impact-60	Bus Impact-60	Bus Impact-60	Bus Impact-60	Sec.	CCS Command
51	Transmit radio altimeter backup.	Bus Impact-50	Bus Impact-50	Bus Impact-50	Bus Impact-50	Sec.	Ground Command (backup) RTC-7
52	Capsule timer starts.		70,000 Feet	Lunar Altitude (Nom.)		D	Altimeter Fusing Event (Altitude)
53	Retro motor fires.	D+2	D+2	D+2	D+2	Sec.	Event
54	Retro motor burnout.	D+12	D+12	D+12	D+12	Sec.	Event
55	Capsule impact.	D+32	D+32	D+32	D+32	Sec.	Event

** Bus impact minus 65 minutes.

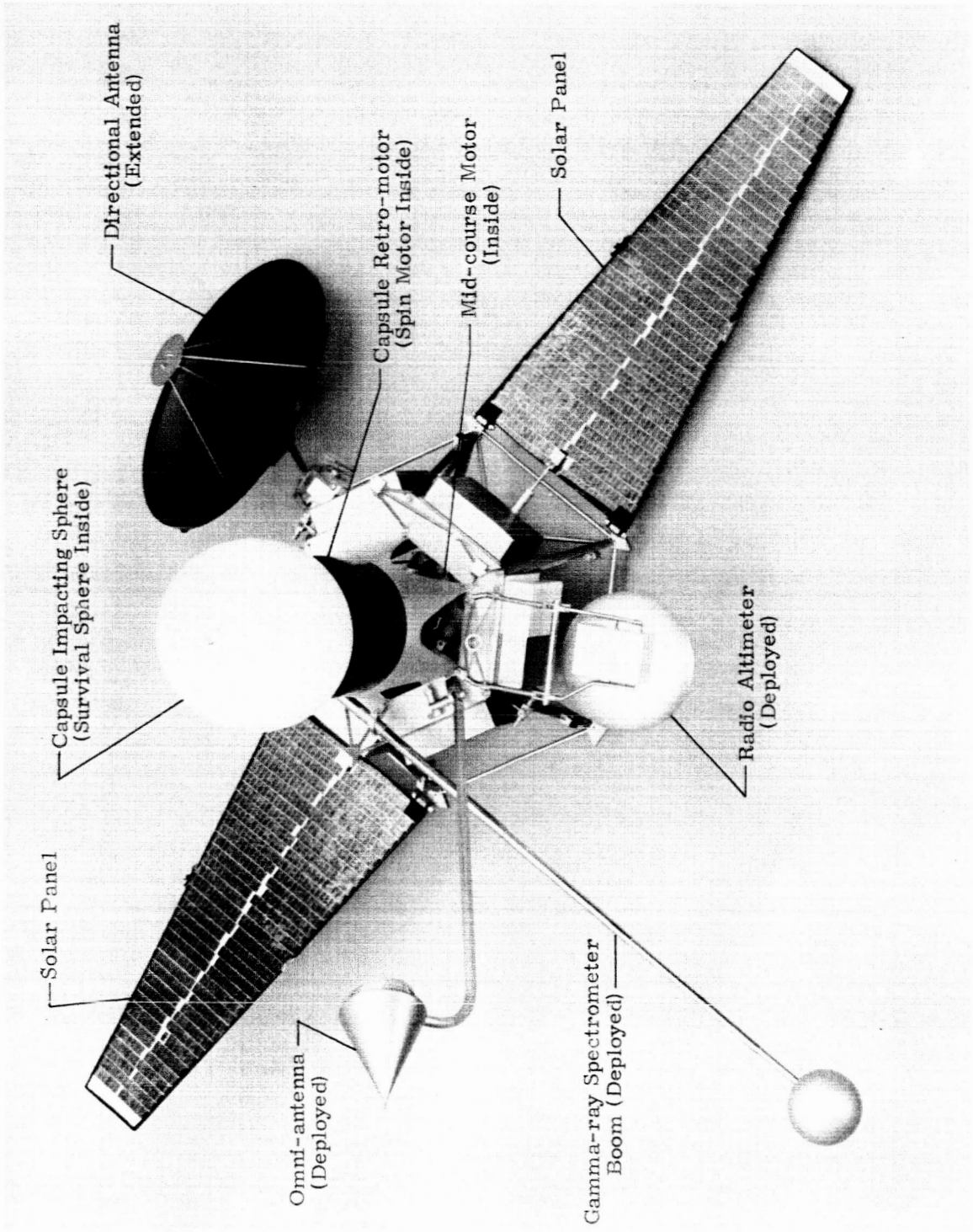

Figure 2-1 Spacecraft in Terminal Maneuver Mode, Just Prior to Capsule Separation

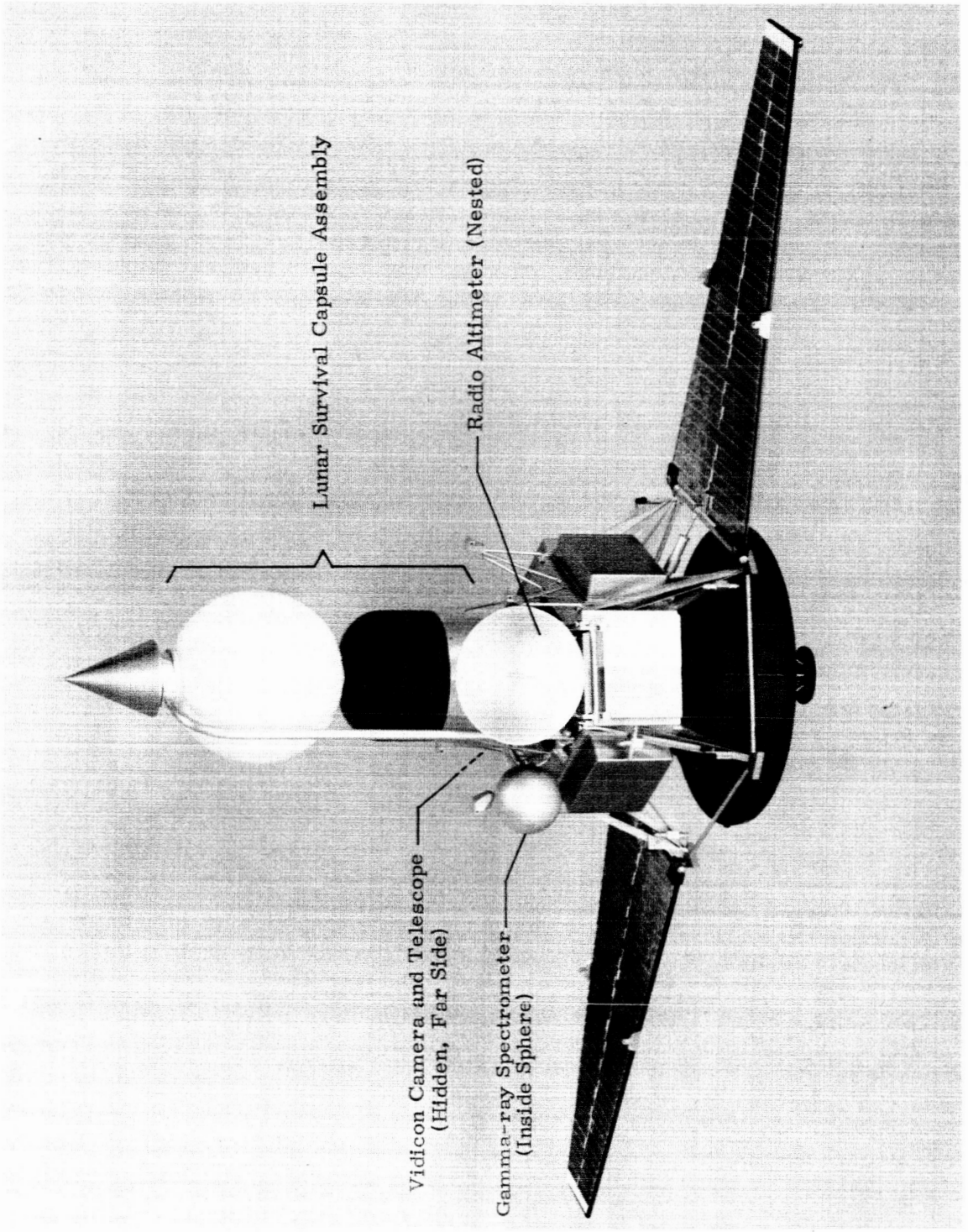

Figure 2-2 Spacecraft in Post-launch Mode, Shown After Injection, but Before Sun Acquisition

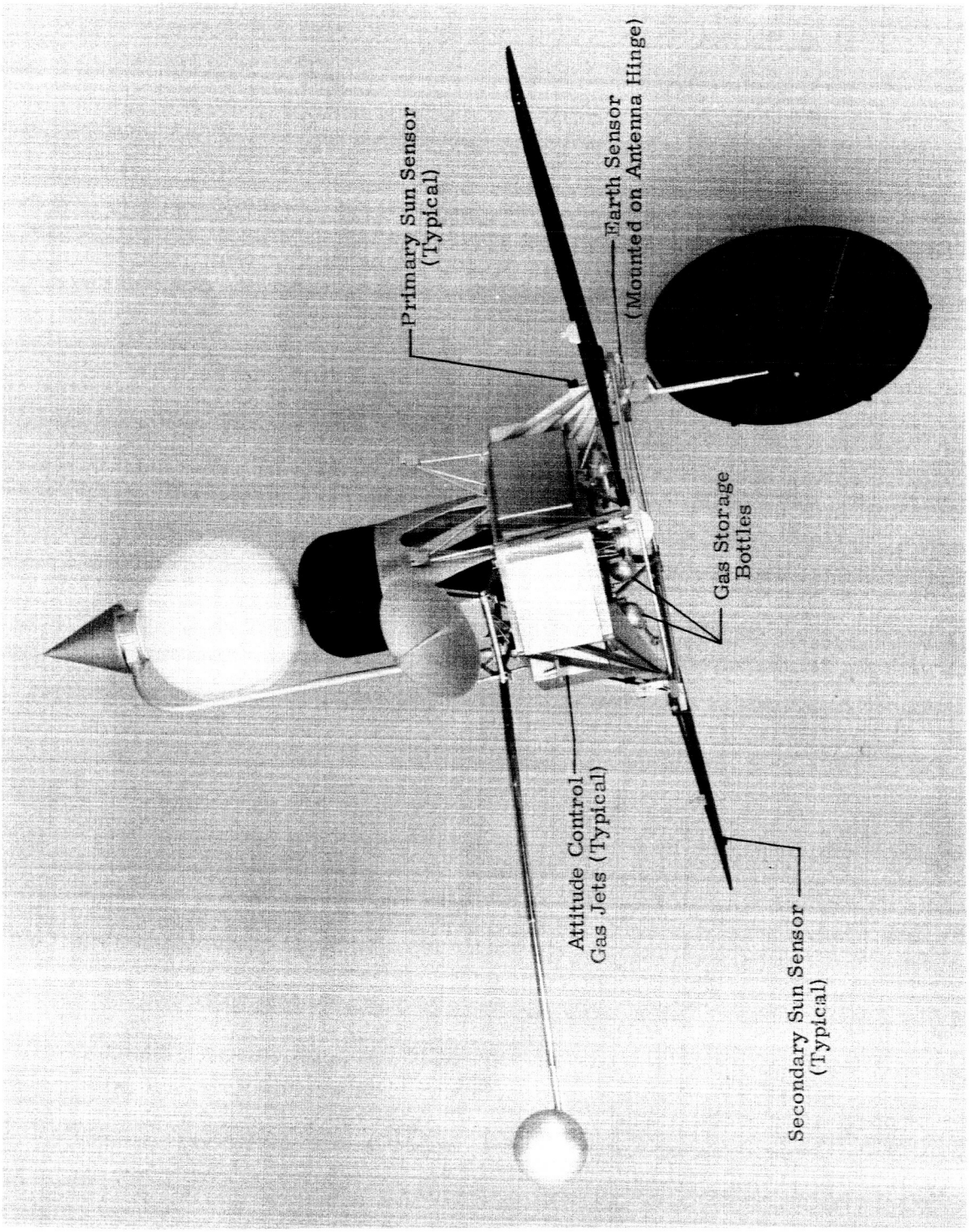

Figure 2-3 Spacecraft in Post Mid-Course Maneuver Position

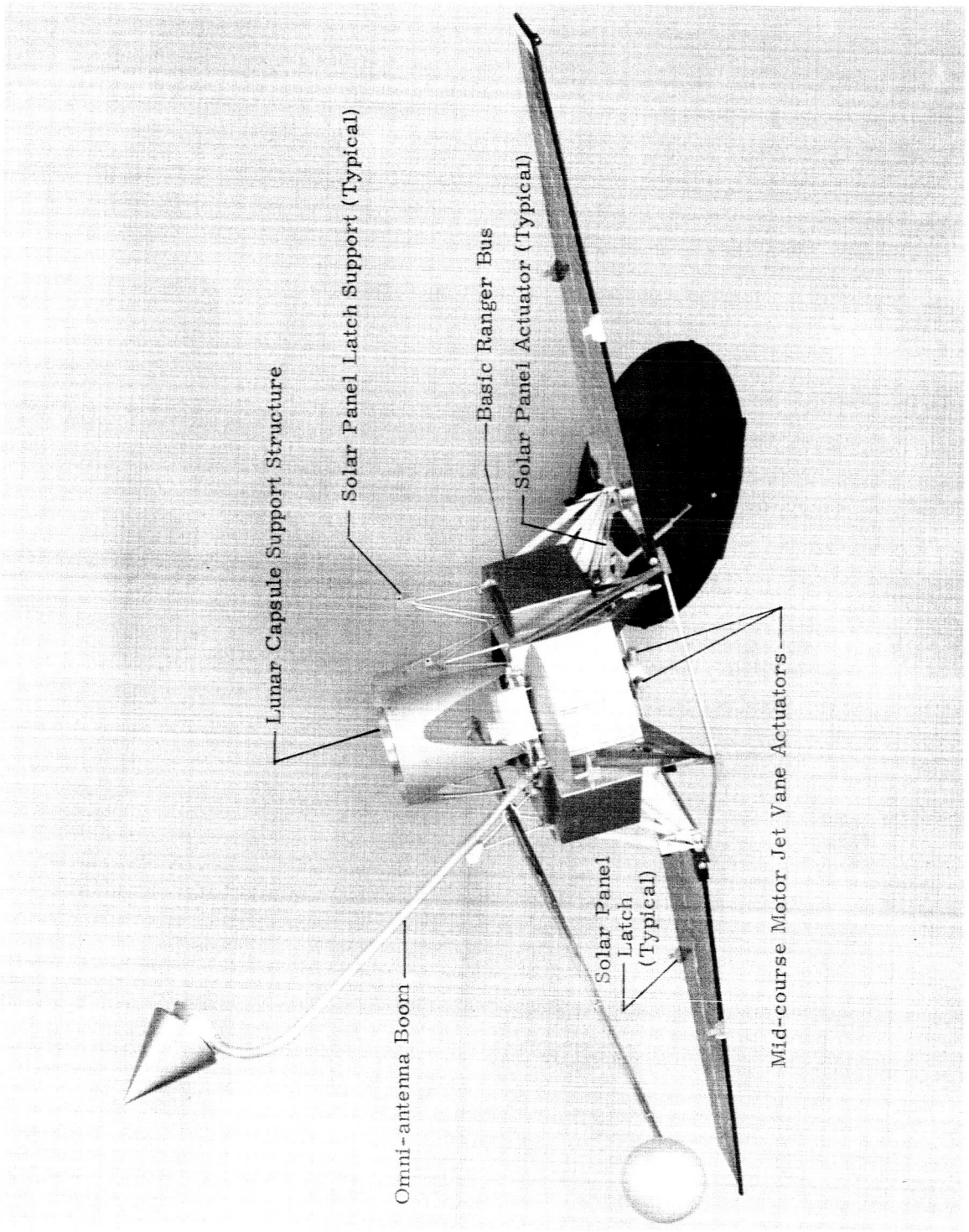

Figure 2-4 Spacecraft in Terminal Mode, Just After Capsule Separation and Just Before Lunar Impact

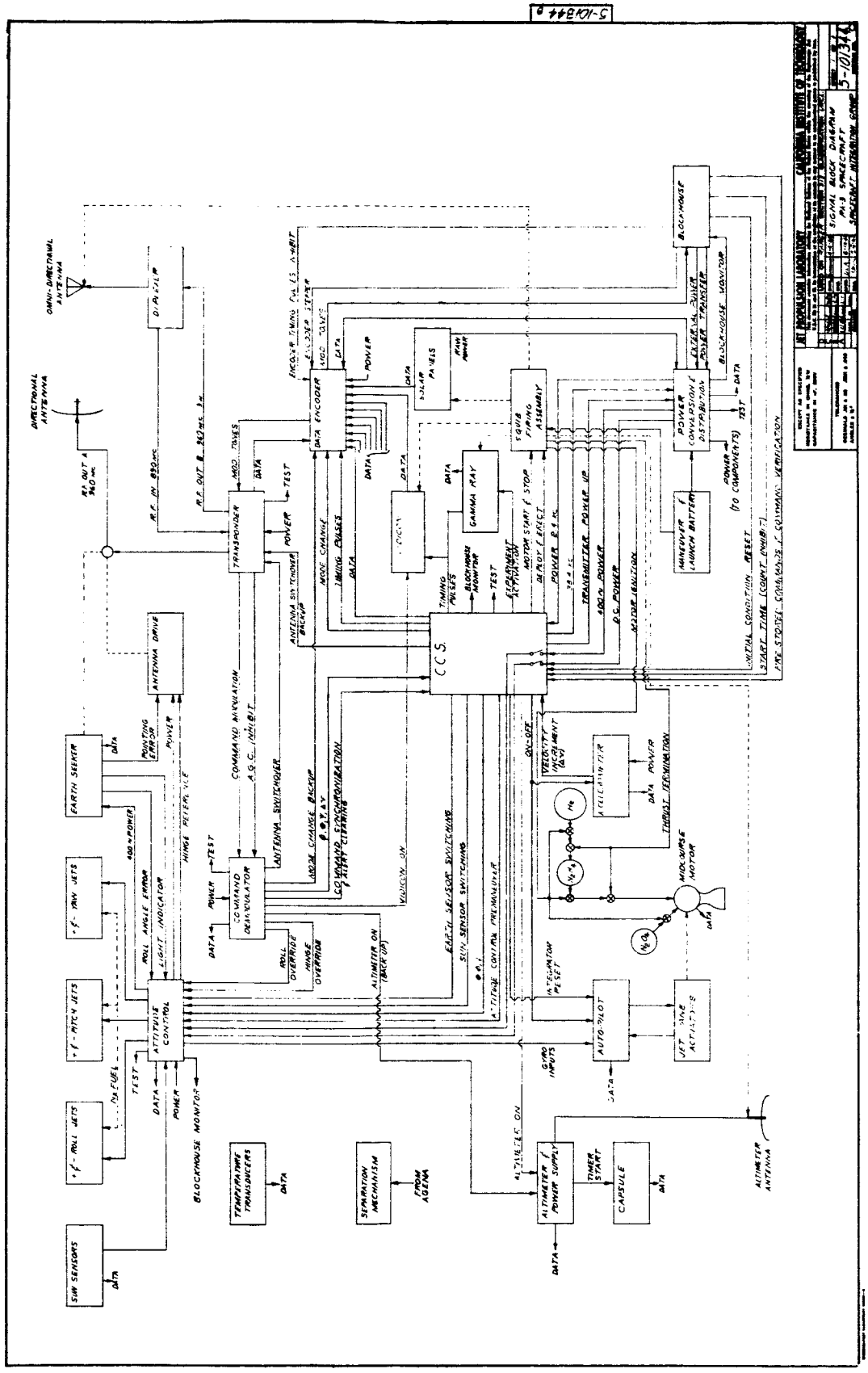

Figure 2-5. Signal Block Diagram, Ranger 345 Spacecraft

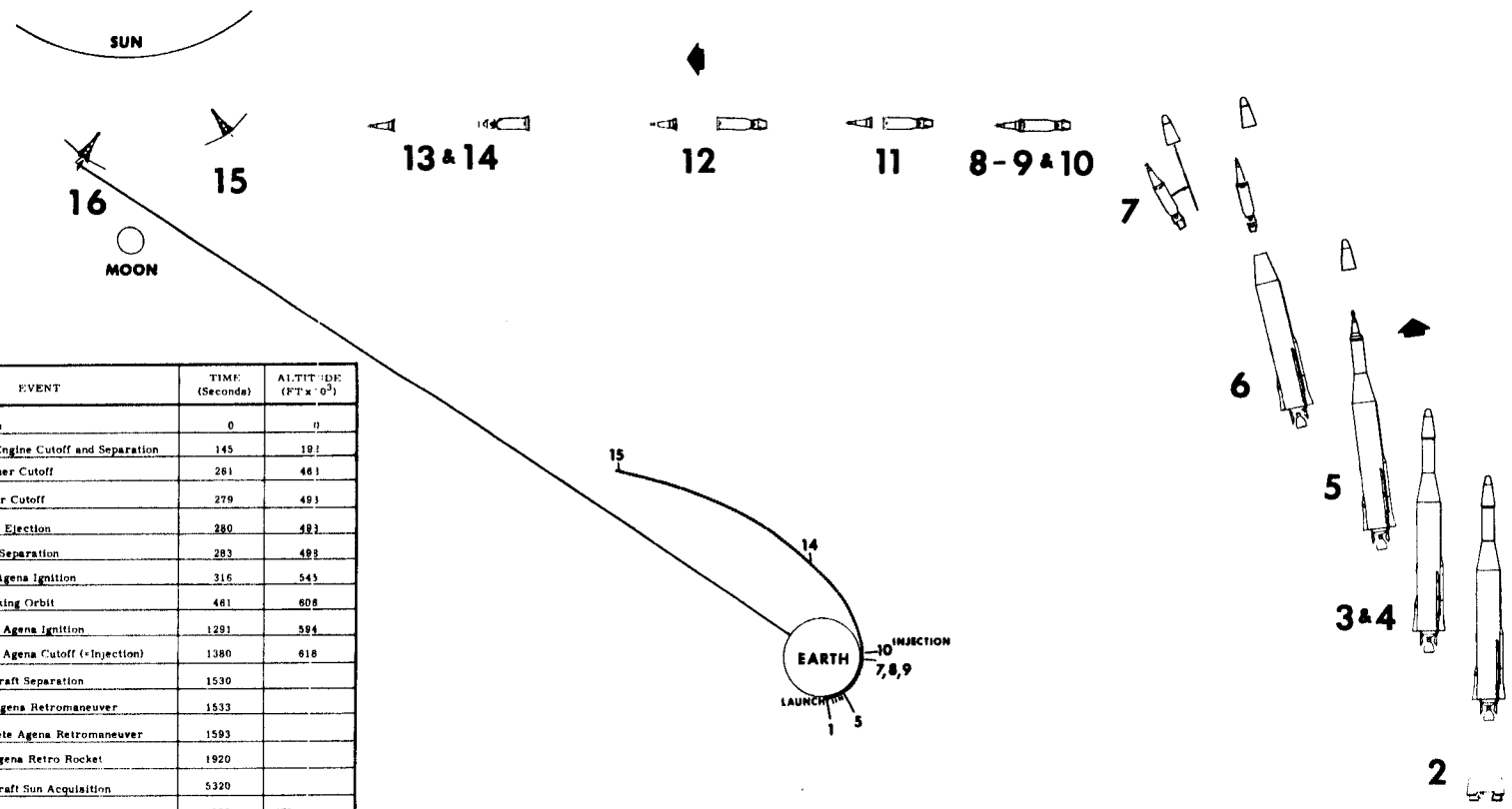

EVENT	TIME (Seconds)	ALTITUDE (FT x 10^3)
1. Launch	0	0
2. Main Engine Cutoff and Separation	145	19.1
3. Sustainer Cutoff	261	46.1
4. Vernier Cutoff	279	49.1
5. Shroud Ejection	280	49.3
6. Agena Separation	283	49.8
7. First Agena Ignition	316	54.5
8. In Parking Orbit	461	60.6
9. Second Agena Ignition	1291	59.4
10. Second Agena Cutoff (=Injection)	1380	61.8
11. Spacecraft Separation	1530	
12. Start Agena Retromaneuver	1533	
13. Complete Agena Retromaneuver	1593	
14. Fire Agena Retro Rocket	1920	
15. Spacecraft Sun Acquisition	5320	
16. Spacecraft Earth Acquisition	5620	170.000

Figure 3.1-1

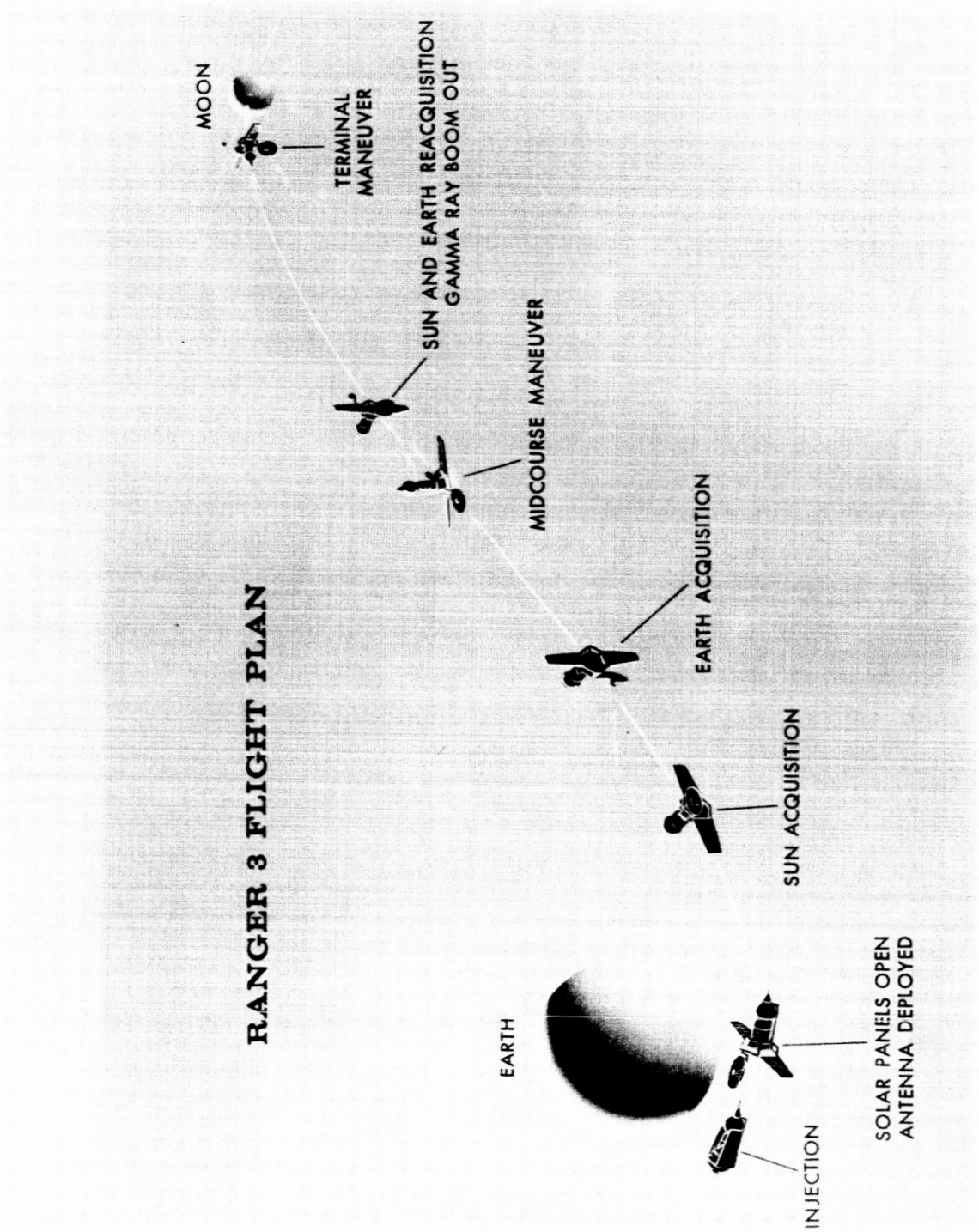
RANGER 3 FLIGHT PLAN
MOON
TERMINAL MANEUVER
SUN AND EARTH REACQUISITION
GAMMA RAY BOOM OUT
MIDCOURSE MANEUVER
EARTH ACQUISITION
SUN ACQUISITION
EARTH
SOLAR PANELS OPEN
ANTENNA DEPLOYED
INJECTION

Figure 3.1-2

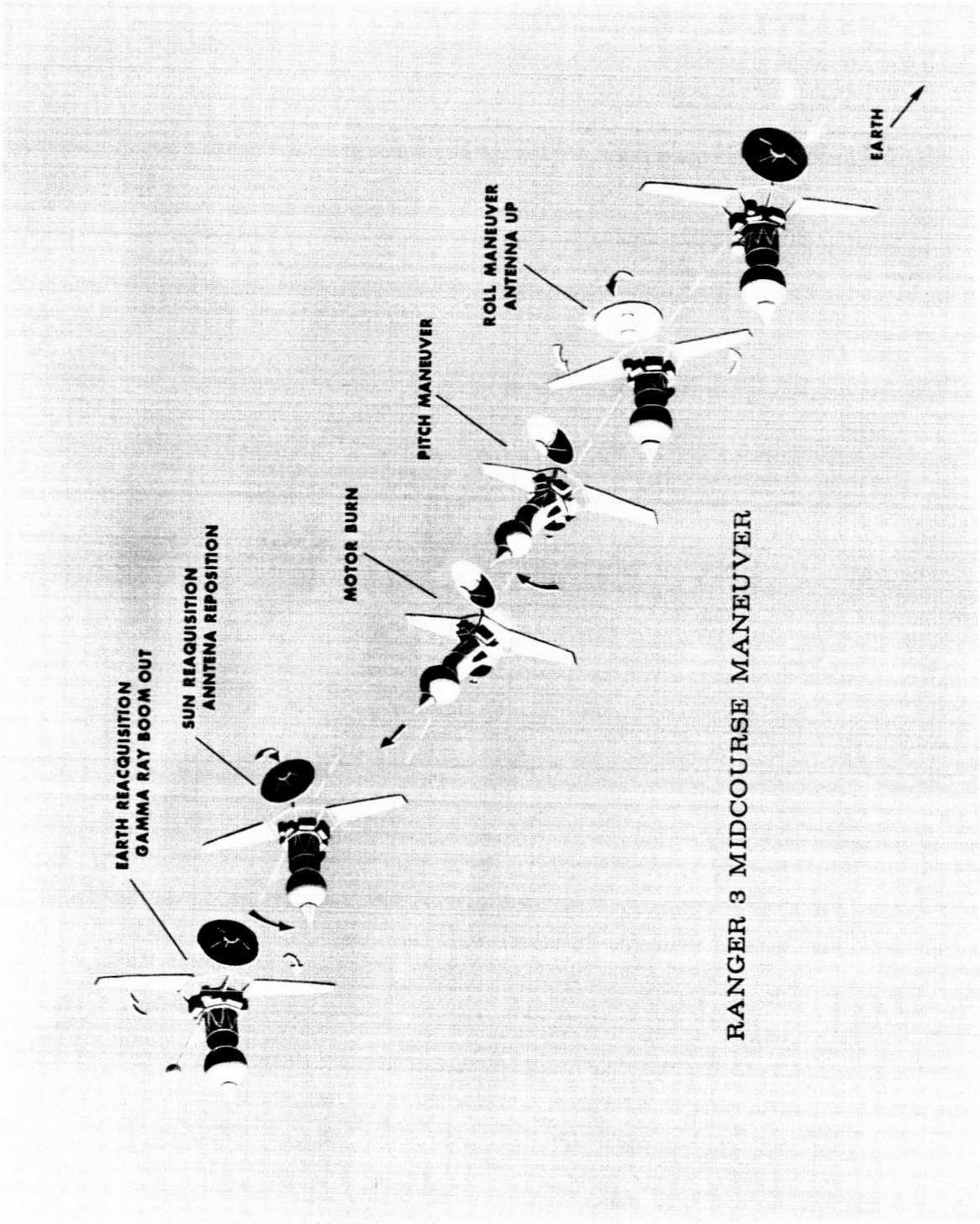

RANGER 3 MIDCOURSE MANEUVER

Figure 3.1-3

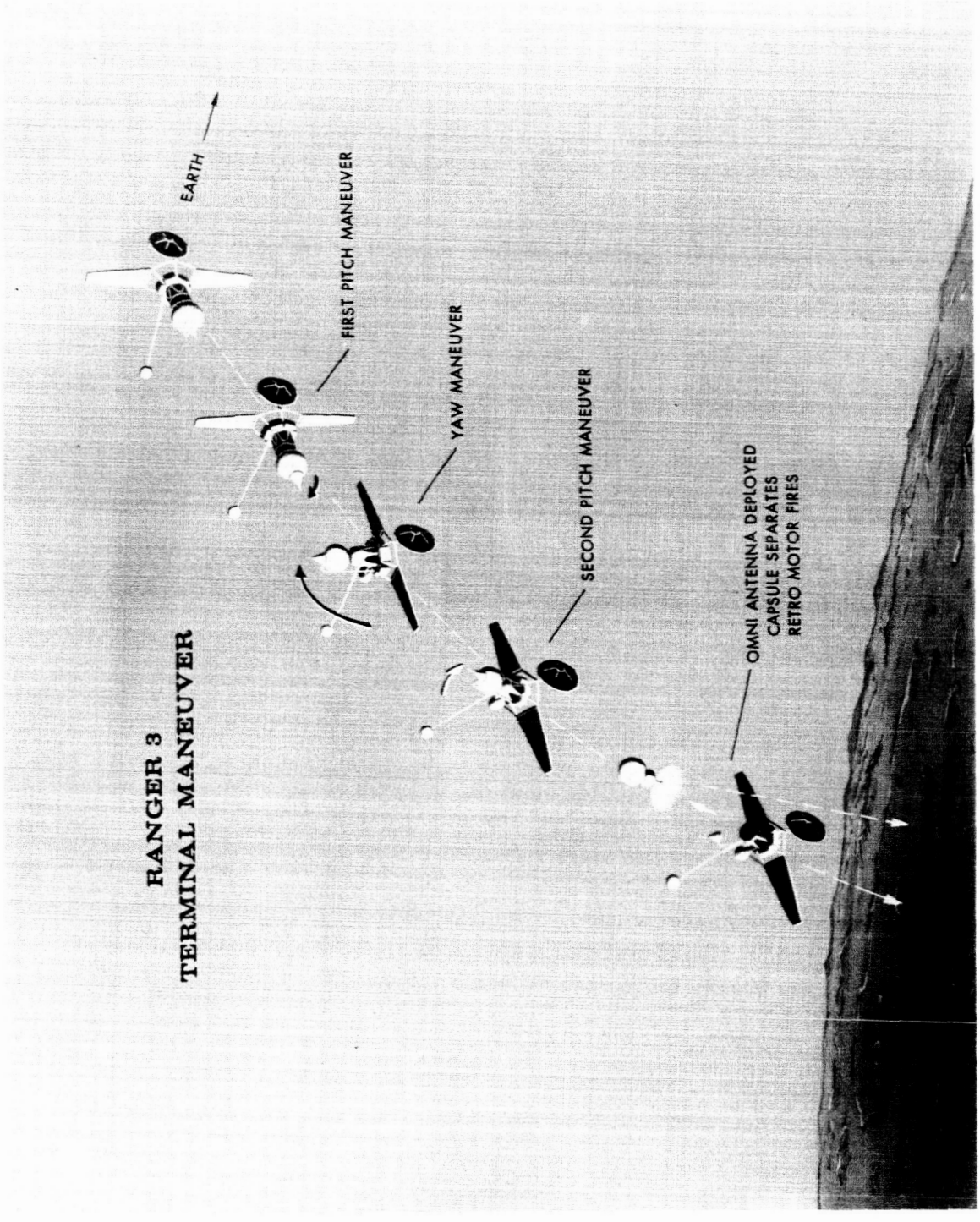
RANGER 3
TERMINAL MANEUVER
EARTH
FIRST PITCH MANEUVER
YAW MANEUVER
SECOND PITCH MANEUVER
OMNI ANTENNA DEPLOYED
CAPSULE SEPARATES
RETRO MOTOR FIRES

Figure 3.1-4

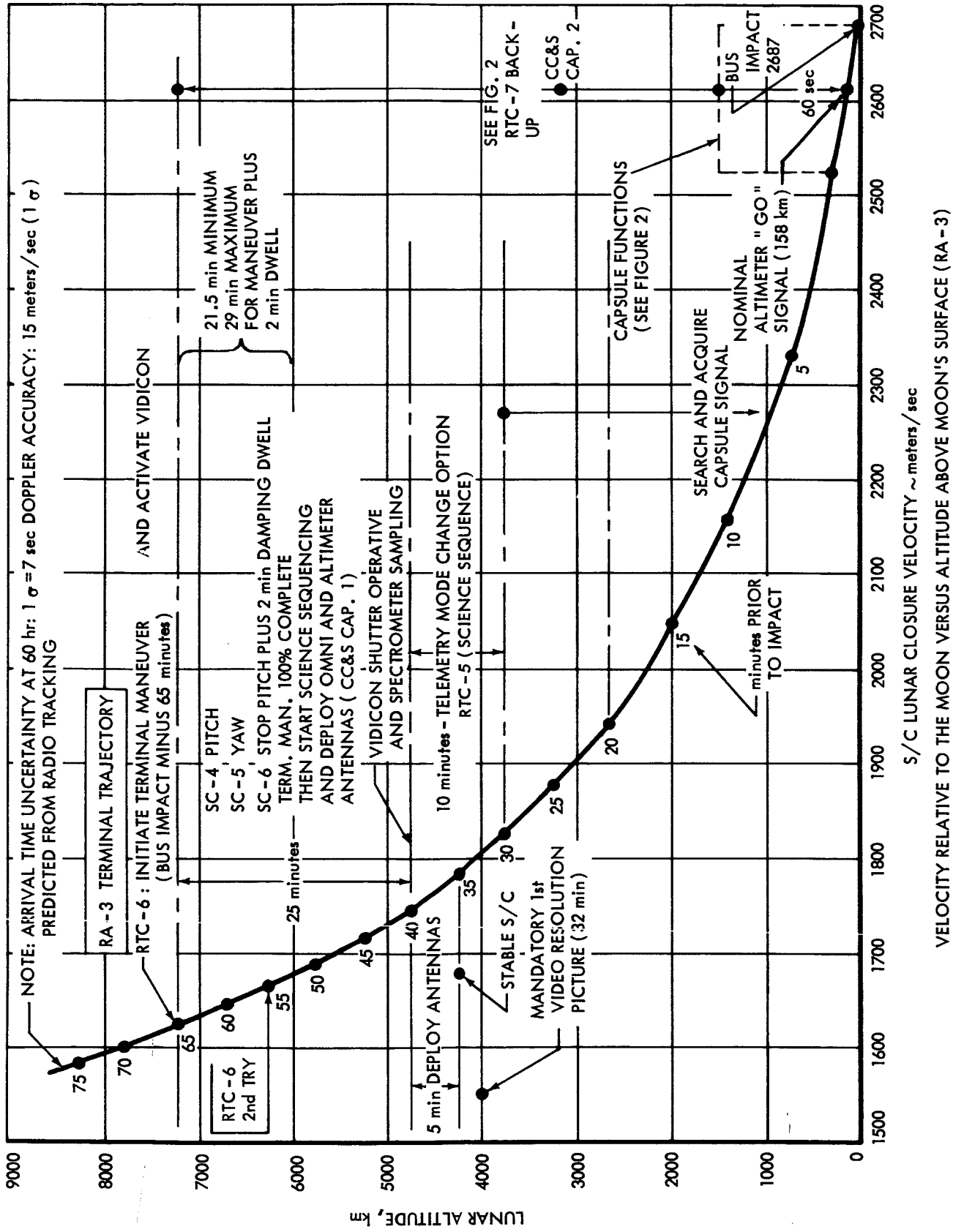

Figure 3.1.3.1-1

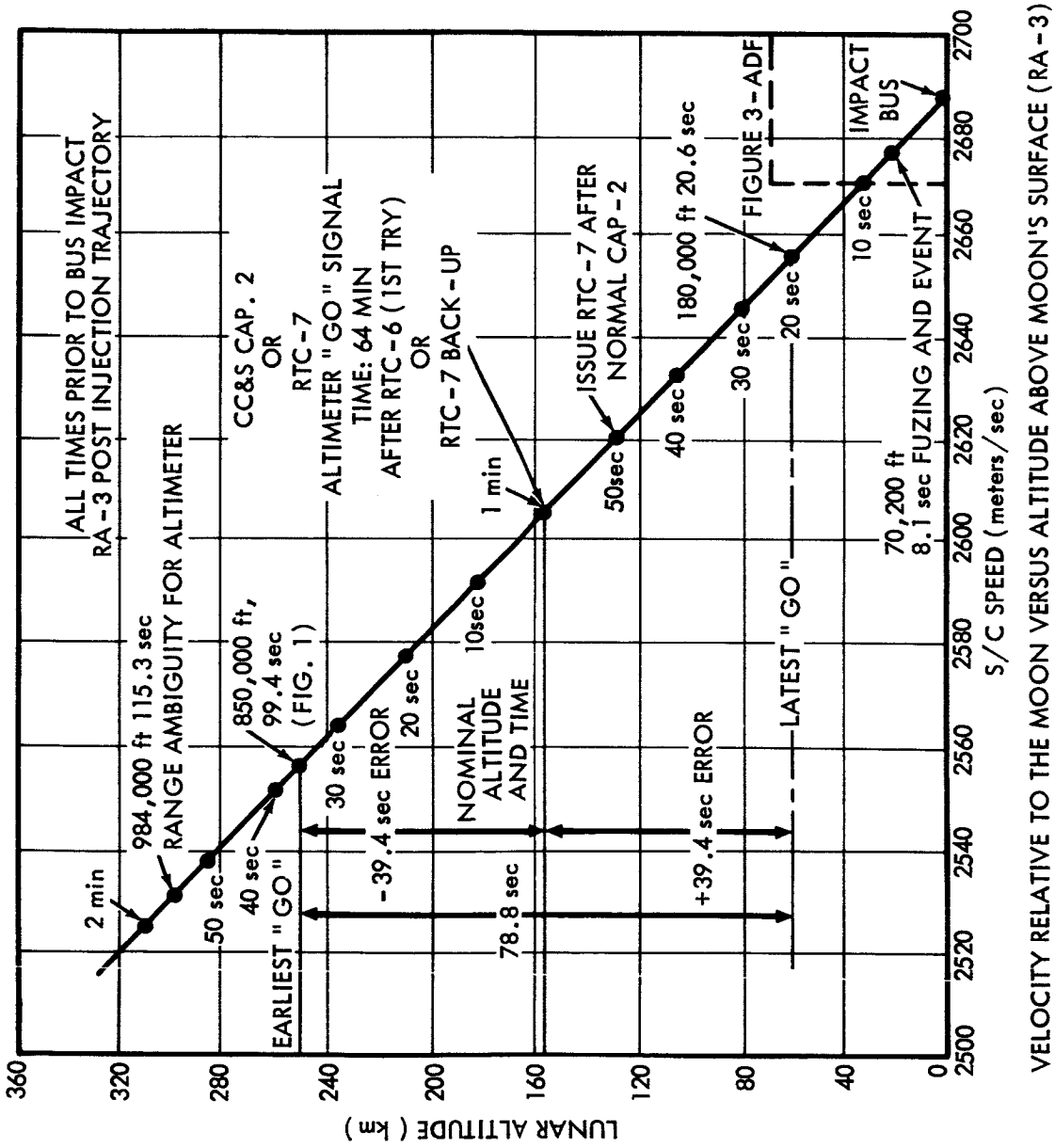

VELOCITY RELATIVE TO THE MOON VERSUS ALTITUDE ABOVE MOON'S SURFACE (RA-3)

Figure 3. 1. 3. 1-2

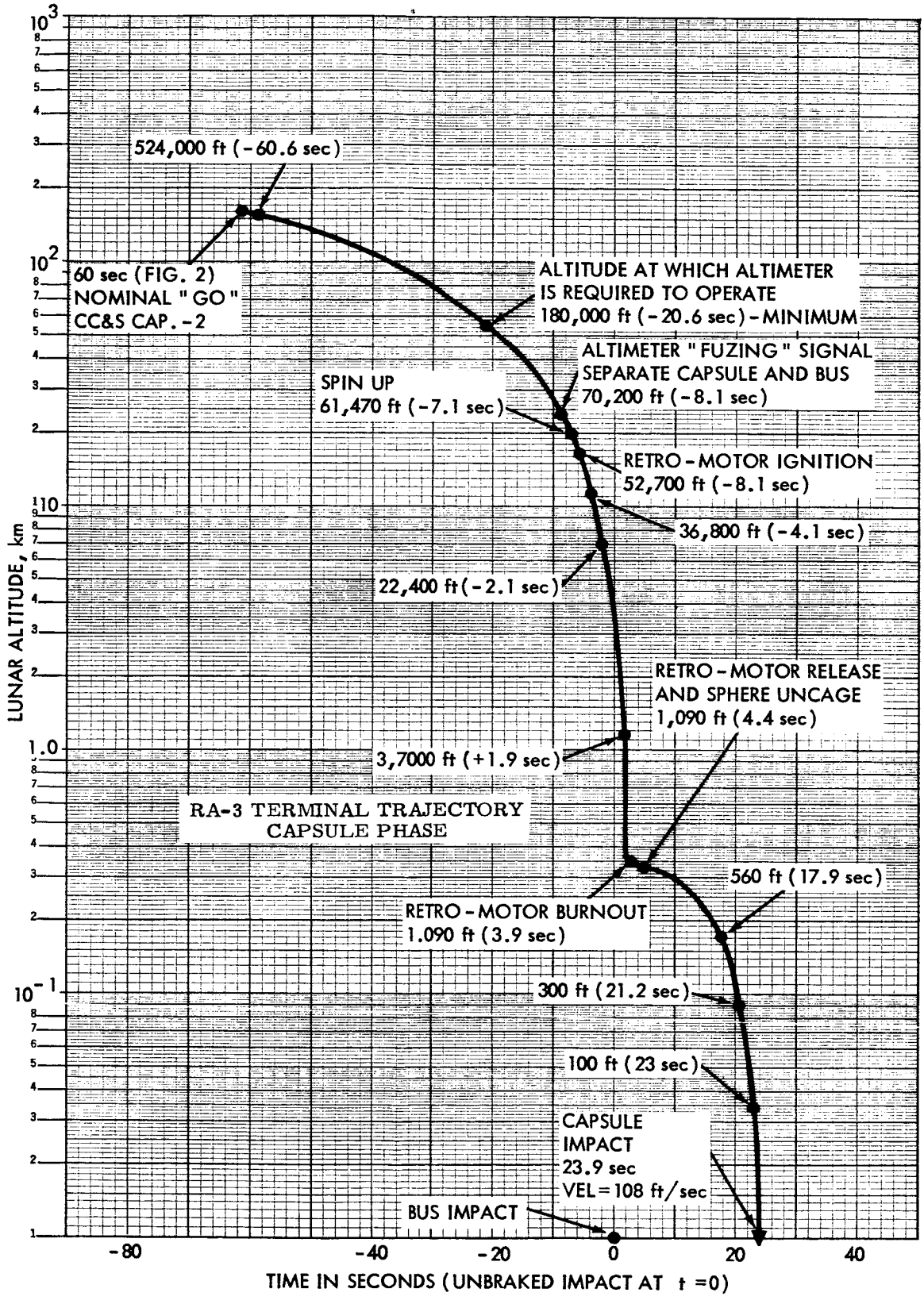

Figure 3.1.3.1-3

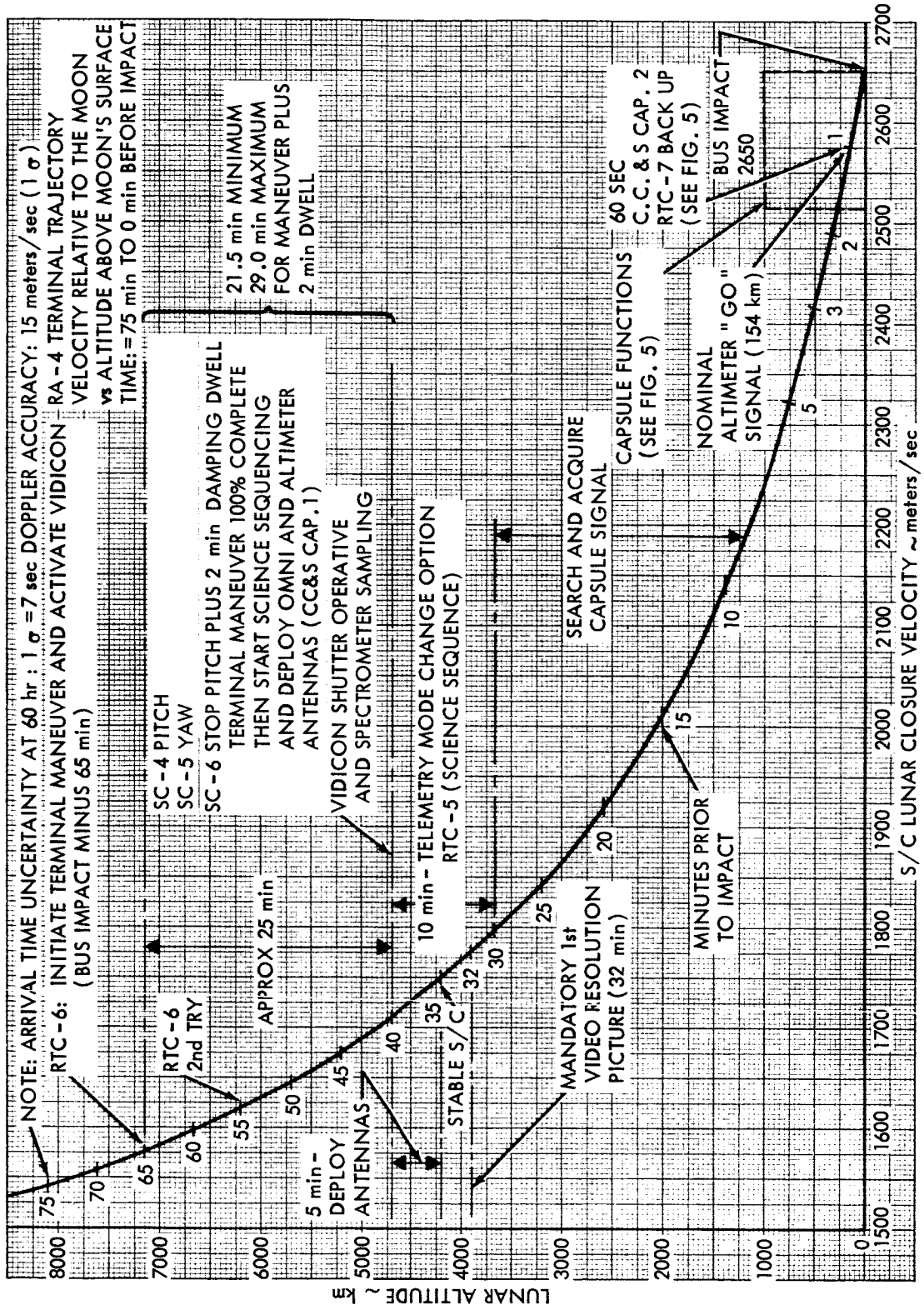

Figure 3.1.3.1-4

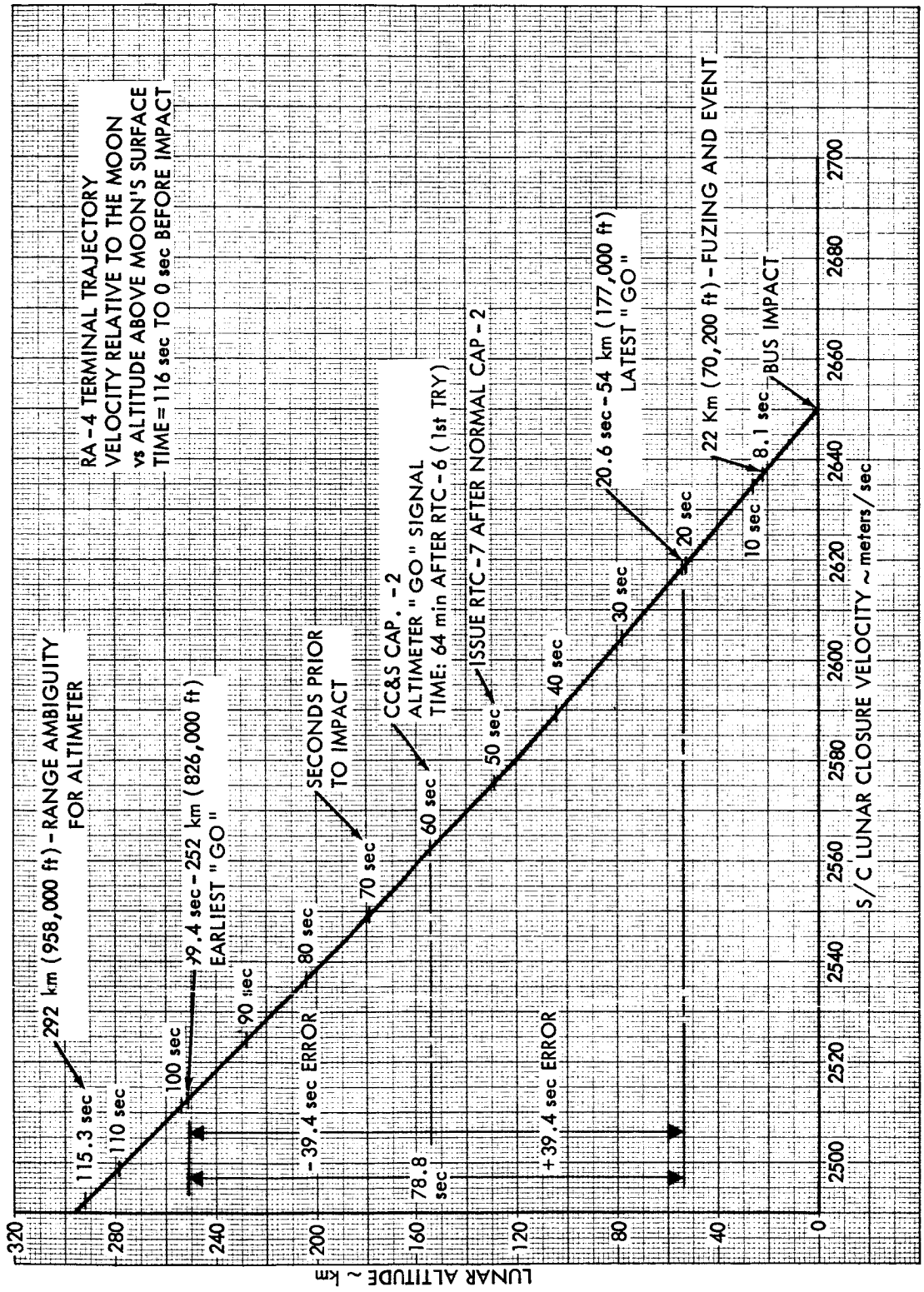

Figure 3.1.3.1-5

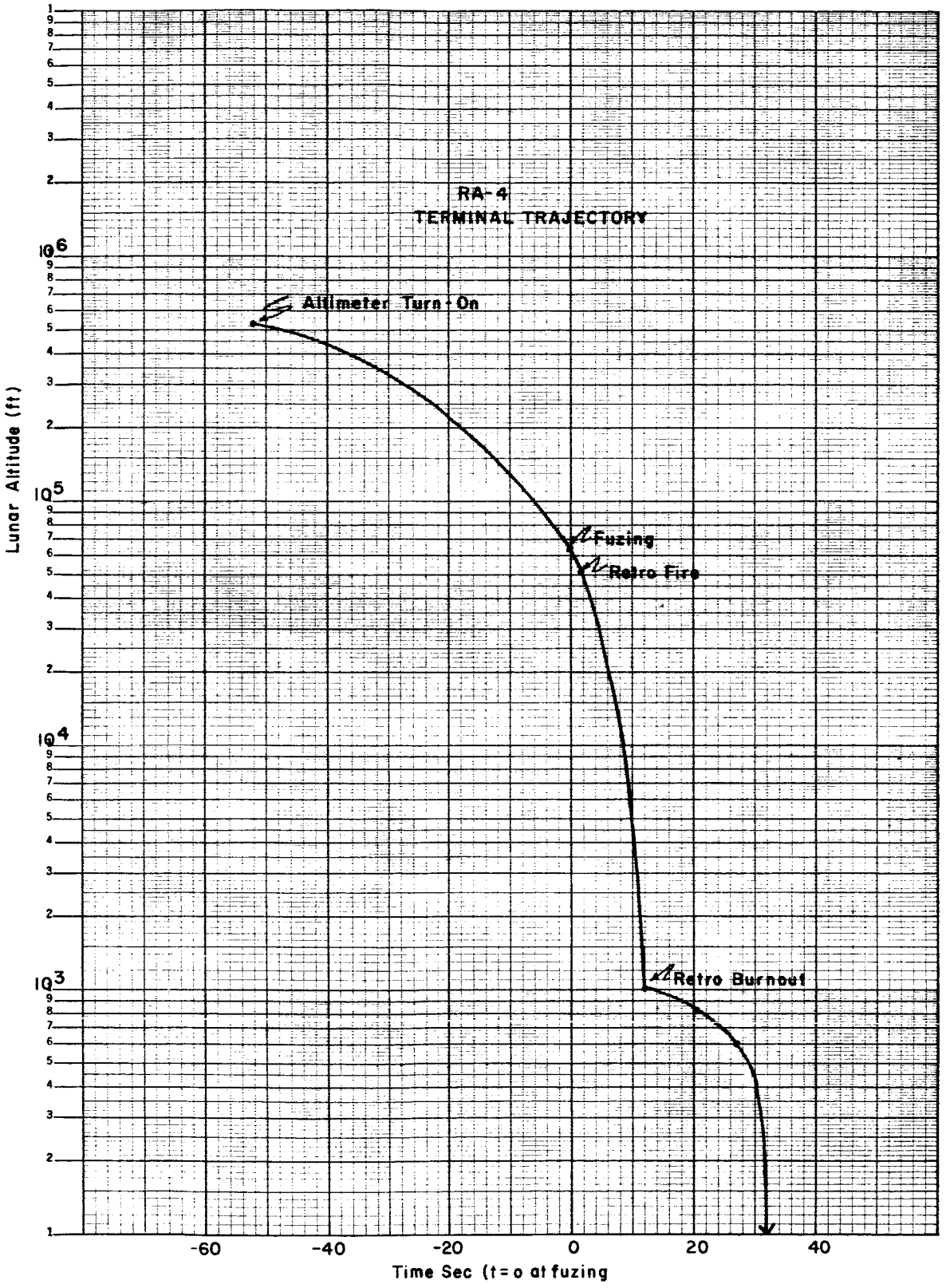

Figure 3.1.3.1-6

JPL Spec. No. RA345-3-120 F

DESIGN CHARACTERISTICS AND RESTRAINTS

DESIGN RESTRAINTS

APPROVED BY:

W. R. Hayward

JET PROPULSION LABORATORY

Spec. No. RA345-3-120 F

7 November 1961

DESIGN CHARACTERISTICS AND RESTRAINTS

DESIGN RESTRAINTS

Revised and Rewritten

1.0 Environment

1.1 The spacecraft must withstand the acceleration and vibration levels associated with the launching of the Atlas and Agena and thereafter remain in a zero acceleration state until midcourse maneuvers and lunar approach maneuvers impose additional vibration and acceleration stress upon it. The spacecraft and its components must be able to operate in a hard vacuum and in the best thermal environment that can be provided by a passive thermal control system, during both sun orientation and in maneuver positions.

1.2 The components of the spacecraft must withstand the radiation environment encountered in space.

1.3 The spacecraft must be able to withstand the strains imposed by normal transportation and handling methods.

1.4 Spacecraft propulsion system (Midcourse motor)

(1) This unit must undergo ignition and operate in a gravitationless environment.

(2) The unit must ignite and operate in a hard vacuum environment.

(3) The midcourse motor should be designed so that when filled and pressurized it will be safe according to current safety standards.

(4) The installation of the midcourse motor shall be such that it can be installed with its thrust axis located to within one inch of the spacecraft's roll axis (Z axis) in all directions in the pitch-yaw (X-Y) plane.

2.0 Vehicles

2.1 The Ranger A-3 spacecraft is being designed for the specific capability of a lunar impact mission aboard an Atlas/Agena vehicle. Total weight or weight of any listed component shall be no more than that stated in RA345-4-120, "Functional Specification Design Parameters; Weight, Power, Temperature, etc."

2.2 Separation

The method of separating the spacecraft from the Agena adapter shall not impart an angular rate greater than 3 degrees per second about each of the 3 principal spacecraft axes. The noncritical magnitude of the incremental velocity imparted to the spacecraft upon separation must be predictable to within ±2 feet per second. Electrical separation shall be effected upon a signal from the Agena stage. Since electrical separation is performed prior to mechanical separation, the reactive force component vectors are confined within the system.

Mechanical separation of the spacecraft from the Agena adapter shall take place in the plane between the feet of the spaceframe and the Agena adapter.

Shroud separation shall occur after the Atlas sustainer stage has been dropped off and the Agena has stabilized the flight vehicle of any residual oscillatory rates. The shroud shall be ejected; a subsequent pitch down program of the Agena vehicle prevents a collision with the free shroud.

Separation of the lunar survival capsule is accomplished solely by the ranging of the radio altimeter against the lunar surface. No part of the spacecraft or the capsule installation shall provide any "tip-off" forces to upset the capsule after mechanical separation and before spin-up and retro thrust. The spacecraft must place the thrust axis of the capsule's retro motor to within ± 1° of the spacecraft's velocity vector at the end of the terminal maneuver, but no later than 10 seconds before lunar impact.

2.3 Center of Gravity (Composite; Spacecraft and Payload)

The acceptable tolerance on the location of the composite center of gravity at initiation of midcourse maneuver is one inch from the roll axis in any direction in the pitch-yaw plane that exists through the Z-axis C.G. The Z-axis C.G. must meet the constraints of the attitude control and autopilot subsystems.

2.4 Tanks for the propellant shall be sized to accommodate a minimum possible velocity increment of 120 ft/sec in the direction of thrust.

2.5 Motor, tankage, cabling, and jet vane actuators should be constructed as an integral unit and be removable.

2.6 Internal timing and event sequencing is controlled by the Central Computer and Sequencer. It is desirable that all internally generated and stored events be routed through the CC&S. All real time ground commands will be initiated by the command decoder. All maneuver stored commands transmitted from the ground shall be routed to and stored by the CC&S until used.

2.7 In order to ease input restraints of capsule design and thermal control problems, it is desirable that the initiation of the terminal maneuver be as late as possible, compatible with vidicon needs, in order to minimize cross velocity vector. Cross velocity is due to misalignment of the retro thrust of the capsule with the velocity vector. Also, reduced time in terminal maneuver reduces thermal control problems.

2.8 The initiation of the radio altimeter is provided by a contact closure in the CC&S, which causes the Squib Firing Assembly to excite a thermal relay in the altimeter for power turn-on. A real-time backup command has been provided for emergency use. The capsule sequence will be initiated solely by the altimeter ranging against the lunar surface.

2.9 After mechanical separation and initiation by spacecraft power, the lunar survival capsule will be responsible for its own operation and lunar landing.

2.10 Power System

The basic power system shall be solar orientation dependent, backed up by the main battery for those phases of flight during which solar attitude cannot be maintained.

Configuration of panels should not be modified from those on RA-1, 2. Increased power demands should be met through improved performance.

The power distribution network shall be designed for optimum performance in accordance with the following relative priority list:

a. Reliability.

b. Efficiency.

c. Conducted and radiated interference in relation to the interference susceptibility of the most critical subsystem in the craft.

d. Power load regulation cross-coupling.

e. Balancing of heat dissipation.

f. Weight.

g. Size.

h. Economy.

Spacecraft wiring outside the hexagonal plenum will be as follows:

a. No feed-through terminal boards (headers) will be mounted in the top or bottom of the hexagonal plenum (doughnut). R. f. coax connections will be considered an exception.

b. For small, highly reliable items attached to the outer hex structure or to the capsule support structure, solder terminals at the item are preferred. A connector may be used instead.

c. For large, complex, or frequently removed items, a connector (or connectors, if necessary) is preferred. Solder terminals may be used, however.

d. Use of pigtails is generally incompatible.

The numerical designations for spacecraft components are listed in Appendix II.

Grounding - Complete grounding methods are iterated in the Cabling Functional Specification RA345-4-130. It is essential to adhere to these rules in order to eliminate ground loops and minimize system interference. In cases where these points are not compatible or consistent with existing designs it should be brought to the attention of the Spacecraft Project Engineer for review.

2.11 Central Computer and Sequencer

The central computer and sequencer (CC&S) constitutes the basic timer for the spacecraft and for the scientific experiments. The CC&S further coordinates the activities of the various spacecraft systems and causes the necessary and correct operations to be initiated during the flight of the craft. It also accepts, stores and acts upon maneuver commands. The CC&S will be designed such as to insure the receipt of correct maneuver stored commands. It shall also be designed for maximum safety against issuing commands inadvertently consistent with reasonable reliability of operation.

2.12 Data Encoder

The data encoder will accept and encode signals corresponding to voltage, temperatures, pressures, scientific data, and other telemetered variables for radio transmission.

2.13 Command Decoder

The command decoder shall recognize the presence of coded binary and 1 cps sync signals at the output of the transponder receiver and provide actuation for all but the maneuver commands. The maneuver commands will be sent to the central computer and sequencer for storage and action. The command decoder will be designed such as to insure correct commands.

2.14 Attitude Control

The Attitude Control subsystem shall contain the necessary optical and gyro sensors, along with associated switching and logic circuitry and cold gas jet impulse system, to acquire and maintain the sun to expose the solar panels and to acquire and maintain the earth for high-gain antenna aiming. It shall be capable of accepting maneuver commands and stabilizing the spacecraft in a prescribed manner. It shall also provide the necessary control for the jet-vane actuators during midcourse motor thrust.

2.15 Extension System

The extension system is composed of two parts, namely: (1) actuators capable of moving mechanically as necessary to accomplish mission requirements and (2) a pyrotechnic initiating system (Squib Firing Assembly). The first is composed of such items as pneumatic booms, extendible arms, solar panel actuators, etc. The second is used to initiate the pyrotechnic latching devices that constrain the extension devices until such time as they need be deployed. The pyrotechnic initiating system shall also be required to switch currents greater than can be manipulated by the Central Computer and Sequencer. The pyrotechnic initiation system shall provide adequate safing to prevent inadvertent initiation consistent with reasonable reliability of operation.

2.16 Lunar Survival Capsule

The lunar survival capsule shall be carried as one of the engineering and scientific passengers on the bus. It will be composed of: (1) an operating payload, containing a small transmitter, antenna, erection and orienting system, a seismic experiment, built-in thermal control for lunar surface environment and its own power, (2) an impact limiter and (3) a solid propellant retro motor with a built-in sequencer and power unit and a solid propellant spin motor. The purpose of the capsule is to deposit a working seismic experiment and telemetry system on the surface of the moon, capable of operating for at least 30 days.

2.17 Radio Altimeter

A radio altimeter will be provided, the sole purpose of which is to generate a capsule separation sequence signal at the proper moment by ranging against the surface of the moon. Radio reflectivity information will be telemetered from the altimeter by the spacecraft telemetry system during altimeter operation.

3.0 Ranger Operations and General Test Plan (effect on spacecraft design)

3.1 Test Operations

3.1.1 Serial numbers should be assigned to all modules in a logical manner and a complete log should be kept of the module's performance throughout its entire history. This log will accompany the module to the Spacecraft Assembly Facility (SAF) and at AMR, and will be maintained and be the responsibility of the user of the module.

3.1.2 The spacecraft system design will be verified by the proof test model in the JPL Spacecraft Assembly building and the necessary environmental facilities.

3.1.2.1 Flight spacecraft system operation will be verified in the JPL SAF and environmental facilities prior to shipment to AMR.

3.1.2.2 There will be a verification of the capsule and radio altimeter design in conjunction with the proof test model at JPL.

3.1.3 Tests will be performed with Lockheed Sunnyvale personnel in attendance, using proof test models of the spacecraft and capsule combination. Certain dynamic testing may be conducted at the LMSC facility.

3.1.4 Units assigned for flight and delivered to the SAF AMR will be logged and kept under control by a single agency.

3.1.5 AMR SAF Checkout

Fueling and pressurization of the spacecraft in the explosive safe area will have to be done after removal from the SAF and prior to removal to the launching area.

Except for gross system tests, checkout, fueling and pressurization, design constraints do not permit extensive testing, trouble shooting, or component replacement beyond the AMR SAF checkout.

3.1.6 AMR Launch Site Operations

a. Reasonable temperature in the spacecraft will be maintained by air-conditioning until launch.

b. Provision to pump ethylene oxide-freon gas mixture into the shroud should be provided, pending establishment of any alternate sterilization techniques.

c. Safety procedures must be generated for problems associated with the pyrotechnic devices, solid propellant, and liquid propellant systems.

d. Capsule handling techniques are yet to be determined completely; however, the following major problems are apparent:

1) Its solid propellant requires special handling and storage considerations normal to solid propellants.

2) Mating of the flight capsule to the flight spacecraft is planned before they meet at the launch complex.

e. Spaoecraft functions must be capable of shutoff (in case of an abort) prior to the 2-inch lift-off separation.

f. Tests.

1) Operations of the spacecraft at the launch complex will be confined to qualitative operation and loop checks.

2) There will be no manual access to the spacecraft at the launch complex. Failure requiring component replacement in a vital subsystem will normally result in a scrub since the spacecraft will have to be returned to the SAF or to the explosive-safe spacecraft area.

3) The principal monitoring of spacecraft performance will be done through telemetry.

4) Certain critical functions will be monitored by r.f. trailer, hangar and blockhouse equipment, the latter of which will also command selected spacecraft functions.

3.2 Midcourse Maneuver Constraints

The midcourse maneuver must be constrained to an Earth-probe-roll axis angle of 90° ±35°. Miss components will be corrected and time of flight will be corrected to the extent possible within the preceding constraint. The minimum velocity increment that will be imparted to the spacecraft is 120 fps.

Transmission of data is required during the midcourse maneuver. No data storage is to be provided, and during the maneuver the three-watt transmitter will be transmitting through the omni-antenna. As the omni-antenna has appreciable nulls along the roll axis of the spacecraft it is necessary to constrain the pointing of the spacecraft. In the event the midcourse maneuver must be performed on the second day, the above constraints are waived. Receipt of telemetry information is desirable, but cannot be held as a requirement.

4.0 Scientific Experiments

4.1 The scientific instruments mounted on the bus must be compatible with the power and telemetry subsystems.

4.2 The scientific experiments for RA-3, 4, & 5 are shown in the following table:

Instrument	Location	Spec. Reference
Photograph (Vidicon)	Bus	RA345-4-210
Gamma-ray Spectrometer	Bus (Extendable Boom)	RA345-4-220
Seismometer	Capsule	

4.3 Vidicon and Associated Electronics

The Photographic system is to be designed within the constraints of the communication system, impact trajectory and capsule ejection. The vidicon is to provide a 200-line TV picture with a 13-second repetition rate. Vidicon turn-on will be initiated by the same earth base command that initiates terminal maneuver. Initiation of the photographic experiment is by a stored command. The vidicon power supply will be self-contained. There are several important constraints on which the success of the experiment depends:

1) The vidicon telescope must have an unobstructed view of the moon during the last hour of the flight.

2) The last memory read-out must occur within a minute or less of the capsule separation maneuver, if, as presently planned, no data from this experiment will be obtained after separation of the impact capsule.

4.4 It is a design requirement that lunar reflectivity data be telemetered from the radio altimeter.

5.0 Packaging requirements

5.1 Packaging philosophy on RA-3, 4, 5 will be as follows:

5.1.1 A modular scheme of packaging of electronic equipment shall be used. The subassembly chassis shall be uniform in profile, and vary in width as necessary to accommodate the components. Uniform profile chassis will maintain interchangeability of subassemblies in order to accomplish mass and heat balance. The communications transponder is an exception.

5.1.2 Interchangeability of Spacecraft Components

A few of the spacecraft subassemblies are designed and fabricated to be nominally interchangeable as, for example, the solar panels.

From the standpoint of the vendor and cognizant engineer, it is unsatisfactory to mark an interchangeable subassembly with a type number signifying that it is to be mated to the spacecraft at only one position.

In considering the spacecraft as a functioning system, however, it is essential to be able to distinguish among a number of similar sub-

assemblies according to their position in the system.

The subassembly-spacecraft electrical interfaces will be marked on the spacecraft side by a system which indicates position and on the assembly side by a system which indicates choice of position.

5.1.3 Electronic assemblies shall have the capability of being sealed in order to control:

1) Temperature of assemblies.

2) Electrical problems.

3) Mechanical problems.

5.1.4 Pressurization requirements are the responsibility of individual package designs since no over-all spacecraft pressurization is provided.

5.1.5 Radiation protection other than spacecraft structure is the responsibility of individual package design.

5.2 Reference Designations for Spacecraft Components

5.2.1 In the interest of uniformity, reference designations for spacecraft components have been assigned according to the IRE Standards on Reference Designations (57 IRE 21.52), (see Appendix II).

5.2.2 The IRE Standards describe two methods for assigning reference designations, i.e., the Block Numbering method and the Unit Numbering method. The Unit Numbering method has been adopted.

5.2.3 The method of designating interchangeable subassemblies is as shown:

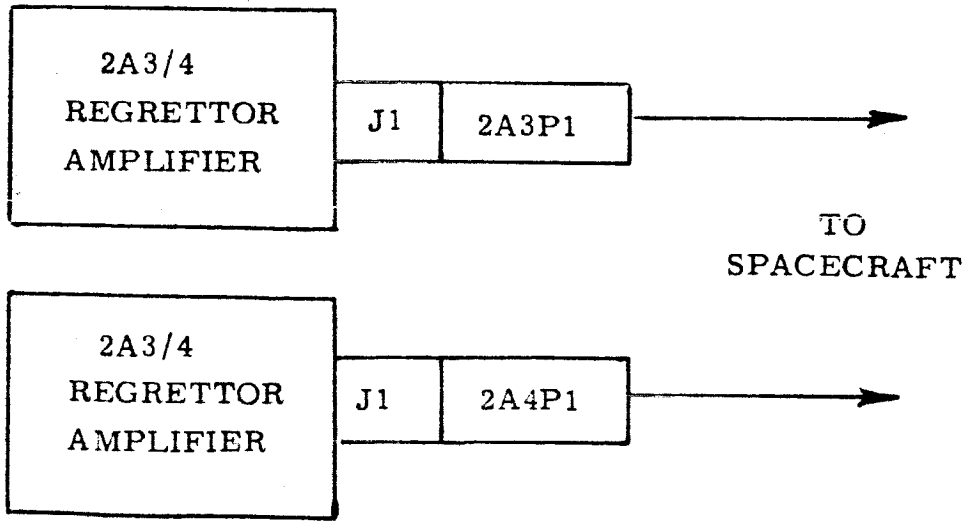

5.3 Equipment must be located so that the center of gravity requirement is maintained with minimum use of ballast.

6.0 Sterilization

Sterilization of RA-3, 4 & 5 and Lunar capsules is a requirement. Every effort shall be exercised to accomplish this requirement to the greatest degree practical. Design problems encountered by this requirement shall be referred to the Spacecraft Project Engineer.

6.1 Internal Sterilization

Internal sterilization is accomplished by heating at 125°C, stabilized for 24 hours or by gamma-ray irradiation at a level of 10^7 Roentgens. Internal sterilization must be achieved prior to assembly in spacecraft and in the case of spares, prior to shipment to AMR. Deviations must be requested from the Program office.

6.2 External Sterilization

External sterilization is accomplished by soaking the spacecraft for 10 hours in a 12% ethylene oxide, 88% freon gas mixture just prior to launch. Any gas passing into payload shroud must pass through a filter to remove any solid matter exceeding .45 microns.

A manual valve or access port on the shroud is required for introduction of the gas. The spacecraft-LMSC shroud and adapter assembly will be purged of the sterilizing gas with dry nitrogen prior to launch.

7.0 Interface Problems

7.1 Mechanical Interface

a. Attachment and in-flight separation of spacecraft.

Separation should impart negligible angular impulse to the spacecraft, but sufficient linear impulse to assure clearance before the Agena's retro-maneuver.

b. Shroud requirements.

The design of the spacecraft should be such as to be impervious to nominal shroud side-drift collisions at shroud ejection.

c. Aerodynamic problems resulting from spacecraft configurations.

The spacecraft design shall introduce no new aerodynamic problems.

d. Structural requirements placed on vehicle and spacecraft.

e. Umbilicals (liquids and gases).

No liquid or gas umbilicals are to be attached during normal launch procedure.

7.2 Electrical Interface

a. Umbilicals (wiring).

b. Electrical power.

All electrical power required for capsule operation will be supplied within the capsule during flight. The spacecraft will provide a single switch closure for initiation of the capsule operational sequence (radio altimeter turn-on). Telemetry information will be taken from the capsule-radio altimeter assembly as necessary.

c. Separate subsystems, including the capsule and radio altimeter, will not mix signal returns; these will be returned to the communications case for chassis ground.

7.3 Instrumentation Requirements. (Pre-launch to injection.)

7.3.1 Spacecraft-Agena separation information will be supplied by devices mounted within the Agena and will give indications of separation for all mechanical and electrical disconnects. These indications will be transmitted by the Agena telemetry link.

8.0 Communications

8.1 Doppler data from the spacecraft transponder must be available for at least 15 minutes after injection occurs.

8.2 A means shall be provided by which RF transmission to and from the JPL omnidirectional antenna can be accomplished while the mated vehicle and spacecraft are on the launch pad and during the vehicle ascent prior to shroud ejection.

8.3 It is necessary to provide power to the high-power transmitter during cruise and all maneuvers. The magnitude and direction of the mid-course velocity correction and the two axis, three mode terminal positioning will be transmitted from the Goldstone Facility.

8.4 The spacecraft transmitter design shall be compatible with the launch-to-injection ground receivers used at Cape Canaveral, the vehicle tracking station, and the Deep Space Instrumentation Facilities. The receiver is to be compatible with the Goldstone transmitter, and the transmitter in the launch-to-injection net.

8.5 A real-time command will be furnished to switch the spacecraft's telemetry output from the omni to the high-gain antenna and reverse with continuous selection option. The omni-antenna will be used for the transmission of telemetry prior to earth acquisition by the high-gain antenna,

after injection and during the midcourse maneuver. Communication with the high-gain antenna shall not be lost during terminal maneuver.

8.6 Chassis ground for all subsystems (excepting the capsule and radio altimeter) shall be established at the transponder.

8.7 The transmitter shall not be operated at more than half power while the spacecraft is mated and on the launching pad. High power shall not be initiated prior to shroud ejection.

(Insert in Spacecraft Design Specification Book)

APPROVED:

System: M. R. Mesnard

Subsystem: William E. Kirkhofer

JET PROPULSION LABORATORY

Spec. No. RA345-4-110 E
12 March 1962

SUPERSEDES:
RA345-4-110 D
RA345-4-111

FUNCTIONAL SPECIFICATION
RANGER RA-3, RA-4, AND RA-5
POSTINJECTION STANDARD TRAJECTORY

REVISED AND REWRITTEN

---

1. SCOPE

1.1 The Postinjection Standard Trajectory for Ranger RA-3 shall be in accordance with Engineering Planning Document No. 55.

1.2 The Postinjection Standard Trajectory for Ranger RA-4 shall be in accordance with Engineering Planning Document No. 56.

1.3 The documentation for Ranger RA-5 trajectory information will be established at a future change of the specification.

(Insert in Spacecraft Design Specification Book) APPROVED:

System: M. R. Menard

JET PROPULSION LABORATORY

Spec. No. RA 345-4-120 F
10 May 1962

SUPERSEDES:
RA 345-4-120 E
10 April 1962

FUNCTIONAL SPECIFICATION
RANGER RA-3, RA-4 & RA-5 SPACECRAFT
DESIGN PARAMETERS & REFERENCE DESIGNATIONS

* DENOTES CHANGE

---

* 1.0 This specification is a control document for the maximum weights, power and temperature range allotted to spacecraft components. The weight, power and temperature range allotted for a specific article is the maximum allowed. Any decrease of weight and power, and increase of temperature range from that allotted is desirable. This document is also the sole source of reference designation numbers and nomenclature for spacecraft components.

2.0 APPLICABLE DOCUMENTS

2.1 The following documents form a part of this specification.

SPECIFICATIONS

Jet Propulsion Laboratory

20002	Process Specification, Identification Missile Parts and Assemblies

PUBLICATIONS

The Institute of Radio Engineers

57 IRE 21.S2	Standards on Reference Designations

3.0 REFERENCE DESIGNATIONS

* 3.1 Philosophy Considerations

Consistent with the approach that RA 345 spacecraft remain as similar to RA 12 as possible, and within the same ground rules applicable to RA 1 through RA 5, the following specification covers the identification and marking of the RA 345 spacecraft components.

3.2 Requirements

The names of the subassemblies called out under 6.0 are to be used in all documentation.

* 3.3 Designation Method

The reference designations for RA 345 spacecraft components have been assigned based on the IRE "Standards on Reference Designations", i.e., 57 IRE 21.S2, modified for the particular requirements of the Ranger program.

4.0 REQUIREMENTS

4.1 Necessary Marking Information

All spacecraft components listed under 5.0 shall be permanently and legibly identified with the following information:

		(Typical)
a.	Reference designation	7A3
b.	Plug or terminal designations	7A3J1 7A3J2
c.	Model number	RA345
d.	Serial number	021
e.	Drawing number or standard part number	D 315 2238

Components not listed under 6.0 shall be marked in accordance with JPL Specification 20002.

All nonflight components listed under 6.0 shall be identified by a red dot in a manner which is visible after spacecraft installation.

Reference designation and serial numbers of internally mounted transducers shall appear on the unit in which they are mounted, adjacent to the units identification marking.

4.2 Optional Marking Information

In addition to the required marking information contained in 4.1, the following information may be included if desired:

a.	Manufacturer	JPL
b.	Purchase Order	
c.	Component Nomenclature	Antenna Drive Electronics
d.	(Etc.)	

4.3 Location of Marking

Information in 4.1 is to be located so that marking is visible when installed on spacecraft, unless its position is specified on the applicable drawings.

4.4 Components to be Marked

All components shall be marked as specified in 5.0 except as follows:

a. Components which do not have a suitable surface for identification or for which identification marking would interfere with temperature control characteristics, shall be individually tagged as specified in 5.3.

b. Components which are subjected to Quality Control Inspection may be ink-stamped or tagged, whichever is preferable and shall be identified with the inspection test procedure number, date of test, and inspector identification.

4.5 Drawings to be Marked

For components specified under 4.4 b, the markings shall appear also in the applicable installation drawing. It is desirable to insert replicas of all marked component surfaces in the installation drawings.

5.0 METHODS OF MARKING

5.1 Ink Stamping with Rubber Stamps

a. Use characters 3/16 of an inch high or higher whenever possible.

b. Clean parts with a suitable solvent so that the surface to be stamped is entirely free from grease and oil.

c. Stamp the part (using described materials) to produce a marking which is clean and legible with sharp, well-defined characters.

d. Use black ink for stamping unless insufficient contrast is secured with the background or unless other colors are specified. Where black is unsuitable and no other color is specified, use yellow.

e. Apply a transparent, protective coating to the marked area, only.

f. The materials described below, or materials with equivalent properties, shall be used for all ink stamping:

Ink, Opaque 73X (specify also, black or required color), Independent Ink Company, Gardena, California.

> NOTE: These inks were selected for their permanency, good application properties, combined with fair to good stamp pad behavior and medium-fast drying. They have good adhesion to clean bare metals without etching the metal and are non-corrosive to aluminum alloys, magnesium, etc. They have good resistance to water, gasoline, lubricating oils, aliphatic hydrocarbons, and many maintenance cleaning and vapor degreasing compounds. They are non-bleeding when coated with lacquers, enamels, etc. They will not resist alcohols, esters, and ketones.

Ink Thinner, 73X, Independent Ink Company, Gardena, California (Thinner is required to condition stamp pads and to clean stamps)

Protective Coating, Eccocoat EC 200, Emerson and Cuming, Pasadena, California.

This coating was selected for its permanency, transparency, degree of flexibility, ease of application, and low retention of volatile compounds. When applied and allowed to set at room temperature, the surface may be handled after six hours. At 150°F, this time is reduced to thirty minutes. Outgassing is hastened by such baking but should fall to an acceptable level within a few days without baking.

5.2 Impression Stamping with Metal Dies

a. Impression stamping is to be done only when specifically called out on the Engineering Drawing.

b. Location for stamping shall be as called out on the Engineering Drawing.

c. Use 1/8-inch characters unless otherwise specified.

d. Use metal backing blocks or other means of support centered under the area to be stamped unless the area is a thick section (1/2-inch or greater).

e. Letters and figures are to be rounded on the edges and free from sharp corners.

f. The impression should be uniform and of a minimum depth to give a legible number. Avoid over impression and marring of under surface in contact with back up block.

g. Molded cables shall be hot stamped when applicable.

5.3 Etching.

a. Etching is to be done only when called out on the Engineering Drawing.

b. Location for stamping shall be as called out on the Engineering Drawing.

c. Use 1/8-inch characters unless otherwise specified.

d. Letters and figures are to be rounded on edges and free from sharp corners.

e. The depression should be uniform and of a minimum depth to give a legible number. Avoid unnecessarily deep depression.

5.4 Identification Tags

a. Use non-abrasive non-conductive tags bearing the part or assembly number. Tags must be capable of withstanding sterilization temperature of 125°C for 24 hours and ethylene-oxide gassing for 11 hours.

b. Attach tags securely to the part or assembly with approved twine in such a manner as not to interfere with installation or operation of the part. Attach tags to parts without holes by tying the twine around the part in the most suitable manner. Do not attach more than one tag to a part, except in the case where a part requires a test tag in addition to the identification tag.

5.5 Nameplates

The use of nameplates or identification plates is not acceptable.

5.6 Sterilization

Identification marking should be applied before the unit is heat sterilized. However, modification or re-work of ink stamping does not require re-heating, in that terminal gas sterilization will penetrate the coating. Identification tags should be pre-sterilized before application to a sterilized unit. In no instance should a unit be re-heated to sterilize any marking identification.

6.0 MASTER EQUIPMENT LIST

6.1 Reference designations and all pertinent design parameters are contained in the attached master equipment list.

COMPONENT	REFERENCE DESIGNATION	COMPONENT LOCATION	WEIGHT LBS. RA-3	WEIGHT LBS. RA-4	WEIGHT LBS. RA-5	ELECTRICAL POWER, DISSIPATION & SOURCES					THERMAL OPER. CONDITIONS			THERMAL NON-OPER. CONDITIONS		MIN. REQ'D. OPERATING LIFE HOURS
						INPUT WATTS	DISSIPATED WATTS	PRIMARY BATTERY AMP. HOURS	SECONDARY BATTERY AMP. HOURS	SOLAR PANELS WATTS	MIN. TEMP. °F	MAX. TEMP. °F	MAX. TEMP. CHANGE °F/MIN.	MIN. TEMP. °F	MAX. TEMP. °F	
Structure ✸	Unit 1		92.67	92.67	93.20											
Basic Hexagonal Bus	1A1		43.98	43.98	43.98											
Solar Panel Support	1A2	1A2A	.64	.64	.64											
Solar Panel Support	1A3	1A3B	.64	.64	.64											
Solar Panel Support	1A4	1A4D	.64	.64	.64											
Solar Panel Support	1A5	1A5E	.64	.64	.64											
High Gain Antenna Yoke	1A6	on C	1.33	1.33	1.33											
Earth Sensor Sun Shield	1A7	on C	1.13	1.13	1.13											
Vidicon Telescope Cover	1A8		.68	.68	.67											
Solar Panel Actuator	1A9/10	1A9A-B	1.11	1.11	1.11											
Solar Panel Actuator	1A9/10	1A10D-E	1.11	1.11	1.11											
Case #1 Pan	1A11	A to B	3.63	3.63	3.63											
Case #2 Pan	1A12	B to C	5.00	5.00	5.00											
Case #3 Pan	1A13	C to D	2.00	2.00	2.00											
Case #4 Pan	1A14	D to E	3.63	3.63	3.63											
Case #5 Pan	1A15	E to F	4.06	4.06	4.06											
Case #6 Pan	1A16	F to A	3.63	3.63	3.63											
Vidicon Telescope Support	1A17	Case III	2.15	2.15	2.15											
Omniantenna Boom	1A18		1.81	1.81	1.81											
Omniantenna Boom Actuator	1A19		1.44	1.44	1.44											
Omniantenna Boom Clamp	1A20		.16	.16	.16											
γ-Ray Spectrometer Boom	1A21		5.26	5.26	5.26											
Midcourse Motor Thermal Shield	1A22	Upper	.50	.50	.50											
Midcourse Motor Thermal Shield	1A23	Lower	.40	.40	.40											
Midcourse Motor Jet Vane	1A24/27	1A24+Y	↑	↑	↑						0	1800				
Midcourse Motor Jet Vane	1A24/27	1A25-Y	(3)	(3)	(3)						0	1800				
Midcourse Motor Jet Vane	1A24/27	1A26+X									0	1800				
Midcourse Motor Jet Vane	1A24/27	1A27-X	↓	↓	↓						0	1800				
Omniantenna/Capsule Adapter	1A36		1.20	1.20	1.20											
Shroud Bumper	1A37		2.00	2.00	2.00											
Ring Harness Tray	1A30		.90	.90	.90											
Nitrogen Bottle Mounts	1A38		1.62	1.62	2.16											

COMPONENT	REFERENCE DESIGNATION	COMPONENT LOCATION	WEIGHT LBS. RA-3	WEIGHT LBS. RA-4	WEIGHT LBS. RA-5	ELECTRICAL POWER, DISSIPATION & SOL. CES					THERMAL OPER. CONDITIONS			THERMAL NON-OPER. CONDITIONS		MIN. REQ'D. OPERATING LIFE HOURS
						INPUT WATTS	DISSIPATED WATTS	PRIMARY BATTERY AMP. HOURS	SECONDARY BATTERY AMP. HOURS	SOLAR PANELS WATTS	MIN. TEMP. °F	MAX. TEMP. °F	MAX. TEMP. CHANGE °F/MIN.	MIN. TEMP. °F	MAX. TEMP. °F	
Structure (cont'd)																
Cabling Clamps			.19	.19	.19											
Ring Harness Supports			.45	.45	.45											
Rotary Joint Housing	1A35		.74	.74	.74											
γ-Ray Cable Dispenser	1A39	1A21	12	12	12											
Earth Sensor Light Hood	1A40	on 7A9	---	.12	.12											
Earth Sensor Light Hood Clamp	1A42	on 7A9	---	.13	---											
Earth Sensor Light Hood Ass'y	1A41	on 7A9	---	---	.25											

COMPONENT	REFERENCE DESIGNATION	COMPONENT LOCATION	WEIGHT LBS. RA-3	WEIGHT LBS. RA-4	WEIGHT LBS. RA-5	ELECTRICAL POWER, DISSIPATION & SOURCES					THERMAL OPER. CONDITIONS			THERMAL NON-OPER. CONDITIONS		MIN. REQ'D. OPERATING LIFE HOURS
						INPUT WATTS	DISSIPATED WATTS	PRIMARY BATTERY AMP. HOURS	SECONDARY BATTERY AMP. HOURS	SOLAR PANELS WATTS	MIN. TEMP. °F	MAX. TEMP. °F	MAX. TEMP. CHANGE °F/MIN.	MIN. TEMP. °F	MAX. TEMP. °F	
Transponder Communications	Unit 2		36.08	36.08	37.00	23.37	20.37									
Transponder	2A1	Case 2	17.61	17.61	17.61	8.40	8.40									
RF Driver	2A2	"	1.43	1.43	1.43	4.18	3.93				32	158				
RF Amplifier (Hi-Gain Antenna)	2A3	"	1.43	1.43	1.43	8.55	5.80				32	158				
Diplexer	2A4	"	.92	.92	.92	-	-				32	158				
RF Amplifier (Lo-Gain Antenna)	2A5	"	1.43	1.43	1.43	8.55	5.80				32	158				
Hi-Gain Antenna Monitor	2A6	"	.19	.19	.19	.0001	.0001				32	158				
Lo-Gain Antenna Monitor	2A7	"	1.18	1.18	1.18	-	-				32	158				
Hi-Gain Antenna (Incl. Feed)	2A8	on 1A1	8.84	8.84	9.76	-	-									
Lo-Gain Antenna	2A9	on 1A1	.75	.75	.75	-	-									
Antenna Transfer Switch	2A10	Case 2	1.06	1.06	1.06	2.24	2.24				32	158				
Rotary Joint	2A20	on 1A1	1.24	1.24	1.24	-	-									
Transponder Temp. Transducer	2TT1	on 2A1	1	1	1	4	4									
Command Decoding *	Unit 3		3.24	3.24	3.24	2.50	2.50									
Command Detector	3A1	Case 1	1.52	1.52	1.52	.63	.63				32	158				
Command Decoder	3A2	Case 1	1.72	1.72	1.72	.87	1.87				32	158				

COMPONENT	REFERENCE DESIGNATION	COMPONENT LOCATION	WEIGHT LBS. RA-3	WEIGHT LBS. RA-4	WEIGHT LBS. RA-5	ELECTRICAL POWER, DISSIPATION & SOURCES					THERMAL OPER. CONDITIONS			THERMAL NON-OPER. CONDITIONS		MIN. REQ'D. OPERATING LIFE HOURS
						INPUT WATTS	DISSIPATED WATTS	PRIMARY BATTERY AMP. HOURS	SECONDARY BATTERY AMP. HOURS	SOLAR PANELS WATTS	MIN. TEMP. °F	MAX. TEMP. °F	MAX. TEMP. CHANGE °F/MIN.	MIN. TEMP. °F	MAX. TEMP. °F	
Power ✱	Unit 4		93.63	93.63	93.63	9	9									
						Cruise / M/C										
Power Switching and Logic	4A1	Case 6	2.22	2.22	2.22	125/160	4.0				32	158				
Boost Regulator	4A2	" "	3.38	3.38	3.38	121/155	24/31				32	158				
Attitude Control Converter	4A3	Case 4	2.92	2.92	2.92	22.5/44.5	6.2				32	158				
Communications Converter	4A4	Case 1	2.28	2.28	2.28	23.70 6	4.0				32	158				
Command Converter	4A5	Case 1	1.62	1.62	1.62	4.0 7	2.0				32	158				
CC&S Inverter	4A6	Case 1	1.37	1.37	1.37	12.8	2.7				32	158				
Data Encoder Converter	4A7	Case 5	1.92	1.92	1.92	12.5	3.0				32	158				
Scientific Inverter	4A8	Case 3	1.64	1.64	1.64	11.7	4.0				32	158				
Solar Panel	4A9/10	4A9A-B	21.05	21.05	21.05	-	-				83	102				
Solar Panel	4A9/10	4A10D-E	21.05	21.05	21.05	-	-				83	102				
Power Sync Supply	4A12	Case 1	1.30	1.30	1.30	6.3	6.3				32	158				
400 ~ 1Ø Inverter	4A13	Case 4	2.24	2.24	2.24	2.5/5.7	1.0/1.1				32	158				
400 ~ 3Ø Inverter	4A14	Case 4	5.44	5.44	5.44	9.0	1.7				32	158				
Battery	4A15	Case 6	24.64	24.64	24.64	-					32	100				
Solar Panel Evaluation Assy.	4A16	on 4A10	.56	.56	.56	-	-				83	102				
Battery Temp. Transducer (T/M)	4TT1	on 4A15														
4A2 Temp. Transducer	4TT3	on 4A2														
4A3 Temp. Transducer	4TT4	on 4A3														
Battery Temp. Transducer (GSE)	4TT6	on 4A15														
4A10 Front Temp. Transducer	4TT7	on 4A10	1	1	1	4	4									
4A10 Back Temp. Transducer	4TT8	on 4A10														
4A9 Front Temp. Transducer	4TT9	on 4A9														
4A9 Back Temp. Transducer	4TT10	on 4A9														
4A1 Temp. Transducer	4TT11	on 4A1														
4A7 Temp. Transducer	4TT12	on 4A7														

COMPONENT	REFERENCE DESIGNATION	COMPONENT LOCATION	WEIGHT LBS. RA-3	WEIGHT LBS. RA-4	WEIGHT LBS. RA-5	ELECTRICAL POWER, DISSIPATION & SOURCES					THERMAL OPER. CONDITIONS			THERMAL NON-OPER. CONDITIONS		MIN. REQ'D. OPERATING LIFE HOURS
						INPUT WATTS	DISSIPATED WATTS	PRIMARY BATTERY AMP. HOURS	SECONDARY BATTERY AMP. HOURS	SOLAR PANELS WATTS	MIN. TEMP. °F	MAX. TEMP. °F	MAX. TEMP. CHANGE °F/MIN.	MIN. TEMP. °F	MAX. TEMP. °F	
CENTRAL COMPUTER & SEQUENCER *	Unit 5		11.76	11.76	11.76	11.0	11.0									
Central Clock	5A1	Case 1	1.20	1.20	1.20	.99	.99				14	179				
Launch Counter	5A2	"	1.56	1.56	1.56	.55	.55				14	179				
Maneuver Clock	5A3	"	1.22	1.22	1.22	.57	.57				14	179				
Maneuver Duration	5A4	"	1.35	1.35	1.35	.36	.36				14	179				
Maneuver Output	5A5	"	1.54	1.54	1.54	.07	.07				14	179				
Accelerometer Integrator	5A6	"	1.31	1.31	1.31	.43	.43				14	179				
Input Decoder	5A7	"	1.14	1.14	1.14	.45	.45				14	179				
Pulse Sequencer	5A8	"	1.36	1.36	1.36	.74	.74				14	179				
Transformer-Rectifier	5A9	"	1.08	1.08	1.08	6.84	6.84				14	179				
DATA ENCODER *	Unit 6		18.08	18.08	18.08	10.7	10.7									
VCO Module I	6A1	Case 5	1.06	1.06	1.06	1.36	1.36				14	180				
VCO Module II	6A2	"	1.41	1.41	1.41	1.36	1.36				14	180				
VCO Module III	6A3	"	.94	.94	.94	1.04	1.04				14	180				
Binary Oscillator	6A4	"	1.62	1.62	1.62	.47	.47				14	180				
Commutator I	6A5	"	1.25	1.25	1.25	.96	.96				14	180				
Commutator II	6A6	"	1.75	1.75	1.75	.10	.10				14	180				
Commutator III	6A7	"	1.69	1.69	1.69	.10	.10				14	180				
Commutator IV	6A8	"	1.69	1.69	1.69	.10	.10				14	180				
Signal Conditioner	6A9	"	1.25	1.25	1.25	.16	.16				14	180				
DC Amplifier	6A10	"	.88	.88	.88	.60	.60				14	180				
Event Coder	6A11	"	.94	.94	.94	.27	.27				14	180				
Temperature Bridge I	6A12	"	1.00	1.00	1.00	2.00	2.00				14	180				
Temperature Bridge II	6A13	"	1.19	1.19	1.19	1.88	1.88				14	180				
Data Selector	6A14	"	1.41	1.41	1.41	.30	.30				14	180				

COMPONENT	REFERENCE DESIGNATION	COMPONENT LOCATION	WEIGHT LBS. RA-3	WEIGHT LBS. RA-4	WEIGHT LBS. RA-5	ELECTRICAL POWER, DISSIPATION & SOURCES					THERMAL OPER. CONDITIONS			THERMAL NON-OPER. CONDITIONS		MIN. REQ'D. OPERATING LIFE HOURS
						INPUT WATTS	DISSIPATED WATTS	PRIMARY BATTERY AMP. HOURS	SECONDARY BATTERY AMP. HOURS	SOLAR PANELS WATTS	MIN. TEMP. °F	MAX. TEMP. °F	MAX. TEMP. CHANGE °F/MIN.	MIN. TEMP. °F	MAX. TEMP. °F	
Attitude Control *	Unit 7		39.05	39.05	40.83											
Gyro & Capacitors	7A1	Case IV	7.66	7.66	7.66	11.0	13.0 (5)				50	130				
Gyro Electronics	7A2	Case IV	1.25	1.25	1.25	8.5	6.5 (5)				32	158				
Antenna Drive Electronics	7A3	Case IV	1.09	1.09	1.09	3.5	3.5				32	158				
Switching Amplifier	7A4	Case IV	.71	.71	.71	14.0	4.0				32	158				
Autopilot Electronics	7A5	Case IV	1.30	1.30	1.30	4.0	4.0				32	158				
Attitude Jet & Valve (P & R)	7A6	C	1.08	1.08	1.08	Total	10.0				32	158				
Attitude Jet & Valve (P & R)	7A7	F	1.07	1.07	1.07	7A16, With	7A17				32	158				
Antenna Motor & Housing	7A8	C	6.86	6.86	6.86	4.0	4.0				32	158				
Earth Sensor	7A9	C	2.54	2.54	2.54	3.5	3.5				14	50				
Sun Sensor	7A10	B	.11	.11	.11	.083	.083				14	50				
Sun Sensor	7A11	C	.11	.11	.11	.083	.083				14	50				
Sun Sensor	7A12	E	.11	.11	.11	.083	.083				14	50				
Sun Sensor	7A13	F	.11	.11	.11	.083	.083				14	50				
Sun Sensor	7A14	4A9	.07	.07	.07	.334	.334				14	50				
Sun Sensor	7A15	4A10	.07	.07	.07	.334	.334				14	50				
Attitude Jet & Valve (Yaw)	7A16	E	.83	.83	.83	10.0 Total					32	158				
Attitude Jet & Valve (Yaw)	7A17	A	.83	.83	.83	with 7A6,	7A7				32	158				
N_2 Tank Pressure Transducer	7A18	on 1A1	.27	.27	.27	--	--									
Accelerometer	7A21	Case IV	2.22	2.22	2.22	1.5	1.5				68	158				
N_2 Pressure Bottle	7A22/24	7A22-B	1.66	1.66	1.66	--	--				32	140				
N_2 Pressure Bottle	7A22/24	7A23-C	1.66	1.66	1.66	--	--				32	140				
N_2 Pressure Bottle	7A22/24	7A24-E	1.66	1.66	1.66	--	--				32	140				
N_2 Pressure Regulator	7A25	on 1A1	1.96	1.96	1.96	--	--				32	158				
N_2 Pressure Bottle	7A26	7A26-F	--	--	1.66	--	--				32	140				
N_2 Tank Temp. Transducer (T/M)	7TT1		↑	↑	↑	↑	↑									
Earth Sensor Temp. Transducer	7TT2	on 7A9														
7A10 Diff. Temp. Transducer	7TT3															
7A11 Temp. Transducer	7TT4		(1)	(1)	(1)	(4)	(4)									
7A13 Temp. Transducer	7TT5															
7A12 Diff. Temp. Transducer	7TT6															
Gyro Temp. Transducer	7TT7															
N_2 Temp Transducer (GSE)	7TT8		↓	↓	↓	↓	↓									
N_2 Gas			2.64	2.64	2.64	--	--									
Tubing & Fittings			1.18	1.18	1.30	--	--									

COMPONENT	REFERENCE DESIGNATION	COMPONENT LOCATION	WEIGHT LBS. RA-3	WEIGHT LBS. RA-4	WEIGHT LBS. RA-5	ELECTRICAL POWER, DISSIPATION & SOURCES					THERMAL OPER. CONDITIONS			THERMAL NON-OPER. CONDITIONS		MIN. REQ'D. OPERATING LIFE HOURS
						INPUT WATTS	DISSIPATED WATTS	PRIMARY BATTERY AMP. HOURS	SECONDARY BATTERY AMP. HOURS	SOLAR PANELS WATTS	MIN. TEMP. °F	MAX. TEMP. °F	MAX. TEMP. CHANGE °F/MIN.	MIN. TEMP. °F	MAX. TEMP. °F	
Extension System ✱	Unit 8		6.86	6.86	6.86											
4A9 Unfold Sensor	8A69	4A9	.20	.20	.20											
4A9 Unfold Squib	8SQ1	above A	.03	.03	.03											
4A9 Unfold Squib	8SQ2	above B	.03	.03	.03											
4A10 Unfold Squib	8SQ3	above D	.03	.03	.03											
4A10 Unfold Squib	8SQ4	above E	.03	.03	.03											
4A9 Unfold Squib	8SQ21	above A	.03	.03	.03											
4A9 Unfold Squib	8SQ22	above B	.03	.03	.03											
4A10 Unfold Squib	8SQ23	above D	.03	.03	.03											
4A10 Unfold Squib	8SQ24	above E	.03	.03	.03											
4A9 Pin Puller	8PP1	above A	.16	.16	.16											
4A9 Pin Puller	8PP2	above B	.16	.16	.16											
4A10 Pin Puller	8PP3	above D	.16	.16	.16											
4A10 Pin Puller	8PP4	above E	.16	.16	.16											
4A10 Unfold Sensor	8A70	4A10	.20	.20	.20											
2A9 Deploy Squib	8SQ5	2A9	.03	.03	.03											
2A9 Deploy Squib	8SQ25	2A9	.03	.03	.03											
2A9 Pin Puller	8PP5	2A9	.16	.16	.16											
2A9 Deploy Sensor	8A72	2A9	.20	.20	.20											
1A21 Extension Squib	8SQ7	1A21	.03	.03	.03											
1A21 Extension Squib	8SQ27	1A21	.03	.03	.03											
1A21 Pin Puller	8PP6	1A21	.16	.16	.16											
1A21 Extension Sensor	8A71	1A21	.20	.20	.20											
Uncover Vidicon Lens Squib	8SQ14	21A1 Vidicon	.03	.03	.03											
Uncover Vidicon Lens Squib	8SQ34	21A1 Vidicon	.03	.03	.03											
Uncover Vidicon Lens Pin Puller	8PP7	21A1 Vidicon	.16	.16	.16											
Altimeter Deploy Sensor	8A74	Altim. Supt.	(2)	(2)	(2)											
Altimeter Deploy Squib	8SQ13	Fixed	(2)	(2)	(2)											
Altimeter Deploy Squib	8SQ33	Moving	(2)	(2)	(2)											
Capsule Separation Sensor	8A73	M/C Motor	.27	.27	.27											
Squib Firing Assembly	8A41	Case 6	4.25	4.25	-	(10)	(10)									
Squib Firing Assembly	8A42	Case 6	-	-	4.25	(10)	(10)									

COMPONENT	REFERENCE DESIGNATION	COMPONENT LOCATION	WEIGHT LBS. RA-3	WEIGHT LBS. RA-4	WEIGHT LBS. RA-5	ELECTRICAL POWER, DISSIPATION & SOURCES					THERMAL OPER. CONDITIONS			THERMAL NON-OPER. CONDITIONS		MIN. REQ'D. OPERATING LIFE HOURS
						INPUT WATTS	DISSIPATED WATTS	PRIMARY BATTERY AMP. HOURS	SECONDARY BATTERY AMP. HOURS	SOLAR PANELS WATTS	MIN. TEMP. °F	MAX. TEMP. °F	MAX. TEMP. CHANGE °F/MIN.	MIN. TEMP. °F	MAX. TEMP. °F	
Extension System (Continued)																
N_2 Valve Open Squib	8SQ8	M/C Motor	3	3	-											
N_2 Valve Open Squib	8SQ35		-	-	3											
N_2 Valve Shut Squib	8SQ9		3	3	-											
N_2 Valve Shut Squib	8SQ37		-	-	3											
Fuel Valve Open Squib	8SQ10		3	3	-											
Fuel Valve Open Squib	8SQ39		-	-	3											
Fuel Valve Shut Squib	8SQ11		3	3	-											
Fuel Valve Shut Squib	8SQ42		-	-	3											
Oxidizer Valve Open Squib	8SQ12		3	3	-											
Oxidizer Valve Open Squib	8SQ44	M/C Motor	-	-	3											

COMPONENT	REFERENCE DESIGNATION	COMPONENT LOCATION	WEIGHT LBS. RA-3	WEIGHT LBS. RA-4	WEIGHT LBS. RA-5	ELECTRICAL POWER, DISSIPATION & SOURCES					THERMAL OPER. CONDITIONS			THERMAL NON-OPER. CONDITIONS		MIN. REQ'D. OPERATING LIFE HOURS
						INPUT WATTS	DISSIPATED WATTS	PRIMARY BATTERY AMP. HOURS	SECONDARY BATTERY AMP. HOURS	SOLAR PANELS WATTS	MIN. TEMP. °F	MAX. TEMP. °F	MAX. TEMP. CHANGE °F/MIN.	MIN. TEMP. °F	MAX. TEMP. °F	
CABLING *	Unit 9		41.48	41.48	42.91											
Ring Harness	9W1	1A1	9.26	9.26	9.72											
Midcourse Ignition Harness	9W2	M/C Motor	1.54	1.54	—											
Midcourse Motor Harness	9W3	M/C Motor	1.54	1.54	1.54											
Vidicon Cable	9W4		.17	.17	.17											
Earth Sensor Cable	9W5	on 1A1	.32	.32	.32											
Squib Harness	9W6/7		2.88	2.88	—											
Lo-Gain Antenna Coax I	9W8	2 to 5	.97	.97	.97											
Rotary Joint Coax	9W9		.30	.30	.30											
Hi-Gain Antenna Coax	9W10		.55	.55	.55											
Case I Harness (CC&S)	9W11	Case 1	2.27	2.27												
Case II Harness (Comm)	9W12	Case 2	3.17	3.17	3.17											
Case III Harness (SCI)	9W13	Case 3	1.18	1.18	1.18											
Case IV Harness (A/C)	9W14	Case 4	2.34	2.34	2.34											
Case V Harness (Encoder)	9W15	Case 5	4.47	4.47	4.47											
Case VI Harness (Power)	9W16	Case 6	1.40	1.40	1.40											
Boom Harness	9W17		.90	.90	.90											
Electronic Assy, I Command Harness	9W18	Case I	1.61	1.61	1.61											
Midcourse Transducer Harness	9W19		1.00	1.00	1.00											
Electronic Assy, III γ-Ray No 1	9W20		.12	.12	.12											
Electronic Assy, III γ-Ray No 2	9W21		.36	.36	.36											
Omni Boom Squib Harness	9W22		.70	.70	—											
Diplexer to Omni Coax	9W23	Case 2	.33	.33	.33											
Hi-Gain Ant Monitor to Rotary-Joint Coax	9W24	Case 2	.33	.33	.33											
Cavities to Switch Coax	9W25	Case 2	.49	.49	.49											
Hi-Gain Ant Monitor to Switch Coax	9W26	Case 2	.28	.28	.28											
Cavity to Lo-Gain Monitor Coax	9W27	Case 2	.33	.33	.33											
Cavity to Hi-Gain Monitor Coax	9W28	Case 2	.19	.19	.19											
Drive Cavity to Transponder Coax	9W29	Case 2	.23	.23	.23											
Transponder to Diplexer Coax	9W30	Case 2	.23	.23	.23											
Diplexer to Lo-Gain Monitor Coax	9W31	Case 2	.30	.30	.30											
Lo-Gain Monitor to Switch	9W32	Case 2	.28	.28	.28											
H.V. Pwr. Supply, γ-Ray No. 3 Harness	9W33		.50	.50	.50											
Case V to Omni Coax No II	9W34		.94	.94	.94											

COMPONENT	REFERENCE DESIGNATION	COMPONENT LOCATION	WEIGHT LBS. RA-3	WEIGHT LBS. RA-4	WEIGHT LBS. RA-5	ELECTRICAL POWER, DISSIPATION & SOURCES					THERMAL OPER. CONDITIONS			THERMAL NON-OPER. CONDITIONS		MIN. REQ'D. OPERATING LIFE HOURS
						INPUT WATTS	DISSIPATED WATTS	PRIMARY BATTERY AMP. HOURS	SECONDARY BATTERY AMP. HOURS	SOLAR PANELS WATTS	MIN. TEMP. °F	MAX. TEMP. °F	MAX. TEMP. CHANGE °F/MIN.	MIN. TEMP. °F	MAX. TEMP. °F	
CABLING (Continued)																
Omniantenna Boom Squib Harness	9W50	on 1A1B	- -	- -	3.55											
Main Squib Harness	9W51	on 1A1	- -	- -												
Midcourse Ignition Harness	9W49	M/C Motor	- -	- -	1.54											
Case I Harness (CC&S)	9W52	Case I	- -	- -	3.27											

COMPONENT	REFERENCE DESIGNATION	COMPONENT LOCATION	WEIGHT LBS. RA-3	WEIGHT LBS. RA-4	WEIGHT LBS. RA-5	ELECTRICAL POWER, DISSIPATION & SOURCES					THERMAL OPER. CONDITIONS			THERMAL NON-OPER. CONDITIONS		MIN. REQ'D. OPERATING LIFE HOURS
						INPUT WATTS	DISSIPATED WATTS	PRIMARY BATTERY AMP. HOURS	SECONDARY BATTERY AMP. HOURS	SOLAR PANELS WATTS	MIN. TEMP. °F	MAX. TEMP. °F	MAX. TEMP. CHANGE °F/MIN.	MIN. TEMP. °F	MAX. TEMP. °F	
MIDCOURSE PROPULSION ✱	Unit 10		38.11	38.11	38.11											
Fuel		on MCM	13.50	13.50	13.50						35	165				
M/C Nitrogen Gas		"	.60	.60	.60						35	165				
Fuel Valve	10A1	"	↑	↑	↑						-60	165				
M/C Nitrogen Gas Valve	10A2	"									-60	165				
+Y Yaw Actuator	10A3	"									32	500				
-Y Yaw Actuator	10A4	"									32	500				
+X Pitch Actuator	10A5	"									32	500				
-X Pitch Actuator	10A6	"									32	500				
Oxidizer Tank & Valve Assy.	10A7	"									13	165				
Fuel Tank Press. Trans.	10A8	"	24.01	24.01	24.01											
M/C N_2 Tank Press. Trans.	10A9	"														
Main Frame & Structure	10A10	"														
M/C N_2 Tank	10A11	"									35	165				
M/C N_2 Press. Regulator	10A12	"									0	200				
Fuel Tank Assy.	10A13	"									35	165				
Rocket Engine & Catalyst	10A14	"	↓	↓	↓						0	165				
Rocket Engine Wall Temp. Trans	10TT1	"	↑	↑	↑	↑	↑									
Fuel Tank Temp. Trans.	10TT2	"														
M/C N_2 Tank Temp. Trans.	10TT3	"	1	1	1	4	4									
-Y Yaw Actuator Temp. Trans.	10TT4	"														
+Y Yaw Actuator Temp. Trans.	10TT5	"	↓	↓	↓	↓	↓									
TEMPERATURE CONTROL	Unit 11															
Carrier Support Temp. Trans.	11TT1	On F	1	1	1	4	4									

COMPONENT	REFERENCE DESIGNATION	COMPONENT LOCATION	WEIGHT LBS. RA-3	WEIGHT LBS. RA-4	WEIGHT LBS. RA-5	ELECTRICAL POWER, DISSIPATION & SOURCES					THERMAL OPER. CONDITIONS			THERMAL NON-OPER. CONDITIONS		MIN. REQ'D. OPERATING LIFE HOURS
						INPUT WATTS	DISSIPATED WATTS	PRIMARY BATTERY AMP. HOURS	SECONDARY BATTERY AMP. HOURS	SOLAR PANELS WATTS	MIN. TEMP. °F	MAX. TEMP. °F	MAX. TEMP. CHANGE °F/MIN.	MIN. TEMP. °F	MAX. TEMP. °F	
VIDICON SYSTEM *	Unit 21		15.78	15.78	15.92											
Vidicon & Telescope Assy.	21A1	on 1A1	13.69	13.69	13.76		3.5				32	122				
Vidicon Electronics Assy.	21A2	on 21A1	- -	- -	- -	4.5	- -				32	122				
Vidicon T-R Power Supply	21A3	Case 3	2.09	2.09	2.16		1.0				32	158				
GAMMA RAY SYSTEM *	Unit 23		13.99	13.99	13.99	2.0	2.0									
Detector	23A1	on 1A21	7.45	7.45	7.45						50	122				
Detector Power Supply	23A2	on 1A21	- -	- -	- -						50	95				
Decoder	23A3	Case 3									32	122				
Memory	23A4	"				2.0	2.0				32	122				
Programs	23A5	"	5.06	5.06	5.06						32	122				
Converter	23A6	"									32	122				
Analyzer T-R Power Supply	23A7	"									32	122				
Thermal Shield Sphere & Brackets	23A8	on 1A21	1.48	1.48	1.48											
Detector Temp. Transducer	23TT1	on 23A1	(1)	(1)	(1)	(4)	(4)									
RADIO ALTIMETER SYSTEM *	Unit 24		9.29	9.20	9.20						40	70				
Radio Altimeter	24A1	on 24A2	6.82	6.80	6.80											
Altimeter Support	24A2	on 1A1	2.05	2.05	2.05											
Altimeter Junction Box	24A3	on 24A2	.42	.35	.35											
Thermal Switch	24A4	24A1	(2)	(2)	(2)											

COMPONENT	REFERENCE DESIGNATION	COMPONENT LOCATION	WEIGHT LBS. RA-3	WEIGHT LBS. RA-4	WEIGHT LBS. RA-5	ELECTRICAL POWER, DISSIPATION & SOURCES					THERMAL OPER. CONDITIONS			THERMAL NON-OPER. CONDITIONS		MIN. REQ'D. OPERATING LIFE HOURS
						INPUT WATTS	DISSIPATED WATTS	PRIMARY BATTERY AMP. HOURS	SECONDARY BATTERY AMP. HOURS	SOLAR PANELS WATTS	MIN. TEMP. °F	MAX. TEMP. °F	MAX. TEMP. CHANGE °F/MIN.	MIN. TEMP. °F	MAX. TEMP. °F	
LUNAR CAPSULE SYSTEM *	Unit 25		320.95	322.90	326.90						40	70				
Capsule Support	25A1	on 1A1	7.73	6.83	6.83											
Retro Motor	25A2	on 25A1	214.40	214.45	214.45	(11)										
Payload Sphere	25A3	on 25A2	89.50	91.00	91.00											
Spin Motor	25A4	on 25A2	2.31	2.21	2.21											
			- -	- -												
Power Sequencer & Logic	25A6	on 25A2	1.20	1.10	1.10											
Vibration Dampers (12 ea)	25A7	on 25A2	.85	.85	.85											
Bus Separation Clamp	25A8	on 25A1	1.16	1.16	1.16											
Payload Separation Clamp	25A9	on 25A2	.23	.23	.23											
Thermal Shield	25A10	25A1/2	3.57	5.07	5.07											
MISC SCIENTIFIC FUNCTIONS *	Unit 29															
Scientific Commutator	29A1	Case 3	.40	.40	.40											
Thermal Switch	29A2	29A1	(8)	(8)	(8)											

COMPONENT	REFERENCE DESIGNATION	COMPONENT LOCATION	WEIGHT LBS. RA-3	WEIGHT LBS. RA-4	WEIGHT LBS. RA-5	ELECTRICAL POWER, DISSIPATION & SOURCES					THERMAL OPER. CONDITIONS			THERMAL NON-OPER. CONDITIONS		MIN. REQ'D. OPERATING LIFE HOURS
						INPUT WATTS	DISSIPATED WATTS	PRIMARY BATTERY AMP. HOURS	SECONDARY BATTERY AMP. HOURS	SOLAR PANELS WATTS	MIN. TEMP. °F	MAX. TEMP. °F	MAX. TEMP. CHANGE °F/MIN.	MIN. TEMP. °F	MAX. TEMP. °F	
SUMMARY *																
Structure			92.67	92.92	93.45											
Transponder Communication			36.08	36.08	37.00											
Command Decoding			3.24	3.24	3.24											
Power			93.63	93.63	93.63											
C.C. & S.			11.76	11.76	11.76											
Data Encoder			18.08	18.08	18.08											
Attitude Control			39.05	39.05	40.83											
Extension System			6.86	6.86	6.86											
Cabling			41.48	41.48	42.91											
Midcourse Propulsion			38.11	38.11	38.11											
Vidicon System			15.78	15.78	15.92											
Gamma Ray System			13.99	13.99	13.99											
Radio Altimeter			9.29	9.20	9.20											
Lunar Capsule System			320.95	322.90	326.90											
Misc. Scientific			.40	.40	.40											
GROSS WEIGHT *			741.37	743.48	752.28											
Justification Weight			-14.21													
ACTUAL WEIGHT (JPL) *			727.16													
Modification Weight			+9.44													
ACTUAL WEIGHT (AMR) *			736.60	741.69												

NOTES:

1. Weight is included in the weight of the component the transducer is used on.
2. Weight is included in the radio altimeter weight.
3. Weights are included in the midcourse motor weight.
4. Power for all temperature transducers is included in the power for the data encoder.
5. 2 watts of dissipation in the gyro and capacitors is furnished by the gyro electronics.
6. 4A4 must be capable of taking 2.24 w spike over and above the load.
7. 4A5 must be capable of taking 1.47 w spike over and above the load.
8. Weight is included in the scientific commutator weight.
9. Input watts to power devices are maximum drawn during the mission. See power supply subsystem functional specification for mission power profile.
10. Power is drawn by squib firing assembly (8A41 or 8A42) only during squib events and varies depending upon the event, ref. pyrotechnics subsystem functional specification.
11. Power supplied from self-contained power source.
12. Weight is included in Gamma Ray Boom (1A21) weight.

(Insert in Spacecraft Design Specification Book)

APPROVED:

System: M. C. Maynard

JET PROPULSION LABORATORY

Spec No RA345-4-130A

5 December 1961

Supersedes: RA345-4-130

Dated: 14 October 1960

FUNCTIONAL SPECIFICATION

CABLING, RA3, 4, & 5

1.0 SCOPE

1.1 This specification covers cabling for the RA3, 4, and 5 spacecraft. The functional requirements are listed plus all other aspects necessary to the development of the functional requirements. This specification outlines the paths to be followed in the design of the cabling to assure a satisfactory compatible design.

2.0 APPLICABLE DOCUMENTS

2.1 The following documents apply to this specification:

DOCUMENTS

Jet Propulsion Laboratory

Spacecraft Design Specification Book
Ranger A3, A4, and A5

JPL 14-072

20014	General Specification, Soldering Process
20016	General Specification, Workmanship Requirements for Electronic Equipment
20018	General Specification, Cable and Harness Assemblies, Fabrication of
30201	Spacecraft Environmental Specification, Flight Equipment, Ranger A3, A4, and A5 Assemblies

3.0 CABLING REQUIREMENTS

3.1 General

The spacecraft is a complex machine which requires the routing of a great number of different signals. The cabling will accomplish the routing of the signals in a manner compatible with the requirements of the source unit and the destination unit. Consideration has to be given to the control of electromagnetic and electrostatic interference as well as to weight, power losses, and mechanical properties, such as IR drop in conductors, IR drop in grounds, insulation, protection from heat, dispersion of heat, tolerance for normal vibration, adequate support, accessibility during rework, accessibility for adjustment and test.

3.2 Electrical Requirements

3.2.1 Grounding

3.2.1.1 The structures, assemblies, chassis and other similar members will not be used as conductors for signal or power currents.

3.2.1.2 Signal, power and shield returns must be isolated from each other.

3.2.1.3 Signal and power returns must not be chassis grounded. Specific requirements necessitating this practice must be approved by the Spacecraft Project Engineer.

3.2.1.4 Shields will be grounded directly to the chassis at one end only.

3.2.1.5 All signal grounds shall be returned to the communications chassis ground.

3.2.1.6 The shield return shall be carried throughout the targets of the cable.

3.2.1.7 Test equipment, instrumentation, and launch equipment shall not tie their chassis to the spacecraft power return, signal returns, or shield returns.

3.2.1.7.1 GSE and GSE cabling shall not be designed or utilized in such a manner as to cause malfunction or improper operation of the spacecraft during test. GSE ground loops must be eliminated.

3.2.1.8 To prevent the generation of ground loops and system interference it may be required to accept some degradation in spacecraft telemetry or ground instrumentation.

3.2.1.9 If the load is not connected to a supply voltage (such as in some servo loops), use shielded cable or twisted pair grounded at the source end.

3.2.1.10 RF circuit shields must be grounded at both ends with very short ground leads. In long cable runs it may be necessary to ground RF and video shields at intermediate points. If the shields are used for electrostatic reasons, it will be necessary to open the shield between ground points to prevent current flow in the shield.

3.2.1.11 Subsystems shall not directly intermix their signal returns. If direct signal return transfer is necessary, isolation must be provided. Otherwise, all signal returns shall be routed to the communications transponder for chassis grounding. Power measurements that are routed to telemetry must isolate their grounds from the telemetry signal return.

3.2.2 Shielding

3.2.2.1 Shielding of sensitive circuit cables should be accomplished as a practical means of reducing the effects of stray fields. To be effective and practical, a shield must be electrically continuous and flexible.

3.2.2.2 When shields are used in sensitive circuits care must be exercised to prevent stray currents induced in the shield from affecting the signal carrying wires. Shields must be connected so that one shield will not carry current from another shield. A pigtail is often connected between the junction of several shields and ground, and therefore, will carry many currents. This pigtail should not be considered a shield.

3.2.2.3 Unfiltered ac or dc control leads between components should always use twisted shielded pairs if these components are susceptible to, or generate, RF interference. Normally, these shields should be grounded at both ends.

3.2.2.4 Continuous shields, used in circuits where shielding is required for radiations other than RF interference, must never be grounded at both ends. If multiple grounds are required for electrostatic reasons, the shield must be broken between ground points.

3.2.2.5 Under no circumstances should shields be used as signal or power return paths.

3.2.3 Segregation

3.2.3.1 Conductors sensitive to audio interference should be categorized and grouped according to the limits of interference which can be tolerated. All of the conductors making up the circuit should be grouped together.

Circuits should be additionally categorized to identify them as susceptible or generating as to the type of grounding mechanism employed.

3.2.3.2 Circuits sensitive to video and RF interference, although shielded, can be further aided by proper cable design. Classification of these circuits should be made on the basis of signal level and vulnerability of the shield.

3.2.3.3 Interference sources should be categorized according to:

a) Single wire AC circuit.

b) Balanced AC circuit.

c) Twisted balanced AC circuit.

d) High harmonic circuit.

e) AC Field sources.

f) Strong RF and pulse cables.

g) Moderate RF and pulse cables.

h) Transient.

3.2.3.4 Wherever objectionable interference, noise or magnetic fields are expected, cancellation techniques such as intimate parallel wiring or twisting of wires will be implemented.

3.3 Physical Requirements

3.3.1 Mechanical Connections

3.3.1.1 No feed-through terminal boards will be mounted in the top or bottom of the hexagonal plenum. RF connectors are an exception.

3.3.1.2 Small, highly reliable items attached to the outer hex structure will preferably make connection at the item by use of solder terminals.

3.3.1.3 Large, complex, or frequently removed items will make connection by use of a connector.

3.3.1.4 Use of pigtails is generally incompatible.

3.3.1.5 If terminal boards are required by an item, the terminal board will be mounted on the item and bonded to it where possible.

3.3.1.6 Splices will be used to save weight and provide more connector pins. Splices shall be employed to accomplish the above in the best manner. However, splices will be confined to the semi-flexible portions of the cabling.

3.3.2 The cabling will avoid the adverse condition of the mid-course motor burning, disrupting the antenna pattern, and interfering with the sensors. Further, test cables will be routed in a manner to preclude damage to items such as sun sensors, etc.

3.3.3 Various heating effects will be considered in the design of the cables such as heating by the sun or cooling by being in a shadow, current flow heating in a vacuum and in the atmosphere, and temperature control that will have to be provided.

3.3.4 To insure reliability, 22-gauge wire will be the smallest wire used.

3.3.5 To control magnetic fields and to conserve weight, a number of related circuits may use the same return and may further be twisted as a group.

3.3.6 To provide for growth in general, 10 percent empty pins will be provided in the connectors at the time the wiring diagram is released. The same pins are to be provided on the outside. No spare wires will be provided, however, except in those areas that may be specified.

3.3.7 No special effort will be instituted to reduce DC magnetic fields. If a choice of otherwise similar methods is available, however, the method which reduces the field will be used.

3.4 Fabrication Requirements

3.4.1 Connectors shall be shared by several subsystems if they are within reasonable proximity to each other and the subsystems do not overflow the connector. If several subsystems each have a small number of wires, they will share the connector.

3.4.2 Some functional requirements can only be met by proper fabrication, therefore the specifications listed under section 2.1 shall be closely adhered to.

3.4.3 Shielded wires will have pins in close proximity to each other.

3.4.4 Wires will be grouped in a connector by categorizing.

3.5 Environmental Requirements

3.5.1 The cabling will be designed to withstand the environment it will encounter on the earth as well as that of space. It will satisfy the environmental conditions called out in Specification No. 30201B as referred to in section 2.1.

3.5.2 The cable must withstand the manipulations attendant to installation and removal. The cable can only be removed three times and still be considered suitable for further use on the spacecraft. Every reasonable precaution is to be exercised during installation to prevent damage to the cable.

3.5.3 Normal manipulations of the cables shall be such as not to create a need for jacketing.

3.5.4 Various parts of a single cable may be considered separately, i.e., flexible, semi-flexible, etc.

3.5.5 All cable assemblies must be capable of withstanding internal sterilization temperatures of 125°C for 24 hours and a 10 hour soak in ethylene oxide-freon gas mixture used for external terminal sterilization. Cables that are wrapped with thermal control tape must be heat sterilized after wrapping. Cables that are assembled directly to the bus will be heat sterilized with the bus. The same is true for the mid-course motor and gamma-ray spectrometer boom. Spare cables will have to be separately heat sterilized.

3.6 Quality Control Requirements

3.6.1 Absolute accuracy is the goal. Cabling will be tested against documents approved by the cognizant engineer of the appropriate subsystem. Continuity, insulation, and additionally designated electrical parameters shall be tested 100% against pin assignments to documents provided independently to Quality Control.

3.6.2 No cable shall be used until it has been accepted by Quality Control.

3.6.3 All portions of cables required to move in normal use shall be a flexible type. This includes the portions that must be moved to be connected. Complete physical inspection is necessary, as flight spacecraft will not be compositely vibration tested.

4.0 DOCUMENTATION

4.1 Nomenclature

4.1.1 All designations for cables, harnesses, plugs, etc., shall originate with the Spacecraft project engineer.

4.2 Details

4.2.1 All elements listed under electrical and physical requirements shall be explicit, such as orientation of connector guides.

4.2.2 Physical and electrical preliminary documents will reflect best current estimates.

4.2.3 Timeliness will be achieved through schedule check dates for the following events:

a) Establishment of physical packages

b) Establishment of physical packages locations

c) Block diagrams which recognize and designate connectors

d) Wiring diagram release

4.2.4 Layout, name, and wiring information will be periodically pre-released to meet the needs of:

a) System test

b) Cognizant engineers

c) Field operations

d) Fabricators

e) Integration

4.2.5 Reproducible documents will be released coincident with completion of the cable assembly for each individual spacecraft.

(Insert in Spacecraft Design Specification Book)

System: M. R. Misnard.

Subsystem: G.P. Cushing

JET PROPULSION LABORATORY

Spec. No. RA345-4-140
15 January 1962

FUNCTIONAL SPECIFICATION

RANGER RA3, 4 & 5 FLIGHT EQUIPMENT

LUNAR CAPSULE (SEISMOMETER) AND RADAR ALTIMETER SUBSYSTEM

1.0 SCOPE

1.1 This specification shall serve to define the configuration and the functional performance for the lunar capsule system which forms a portion of the Ranger 345 spacecraft. This system shall primarily consist of that equipment carried on the Ranger 345 spacecraft specifically for the purpose of separating and landing a lunar landing sphere on the surface of the moon.

2.0 APPLICABLE DOCUMENTS

2.1 The following documents shall be a part of or be applicable to this specification:

SPECIFICATIONS

Military

MIL-E-5272(C) Environmental Testing

Jet Propulsion Laboratory

Spacecraft Design Specification Book, RA345

Aeronutronic Division, Ford Motor Company

LCS-001	Environmental Specification for Condition I
LCS-002	Environmental Specification for Condition II
LCS-003	Environmental Specification for Condition III
LCS-004	Environmental Specification for Condition IV
LCS-005	Sterilization Specification

OTHER PUBLICATIONS

Aeronutronic Division, Ford Motor Company

	Ford Motor Company Subcontract SC-05850
	Ford Motor Company Subcontract SC-

DRAWINGS

Aeronutronic Division, Ford Motor Company

800000	Assembly, Lunar Capsule
800037	Lunar Capsule Electrical Interconnections
803211	Interface Detail, Retro Rocket Motor
805580	Voltage Controlled Oscillator

3.0 REQUIREMENTS

3.1 Description

The general configuration is as shown in figure 3.0. The primary purpose of the lunar capsule system shall be to land an instrumented landing sphere on the surface of the moon after being boosted through a launch trajectory and controlled in space on an impact trajectory with the moon. The major assemblies of this system are:

a. Lunar landing sphere, complete with a survival sphere

b. Retrorocket

c. Altimeter assembly

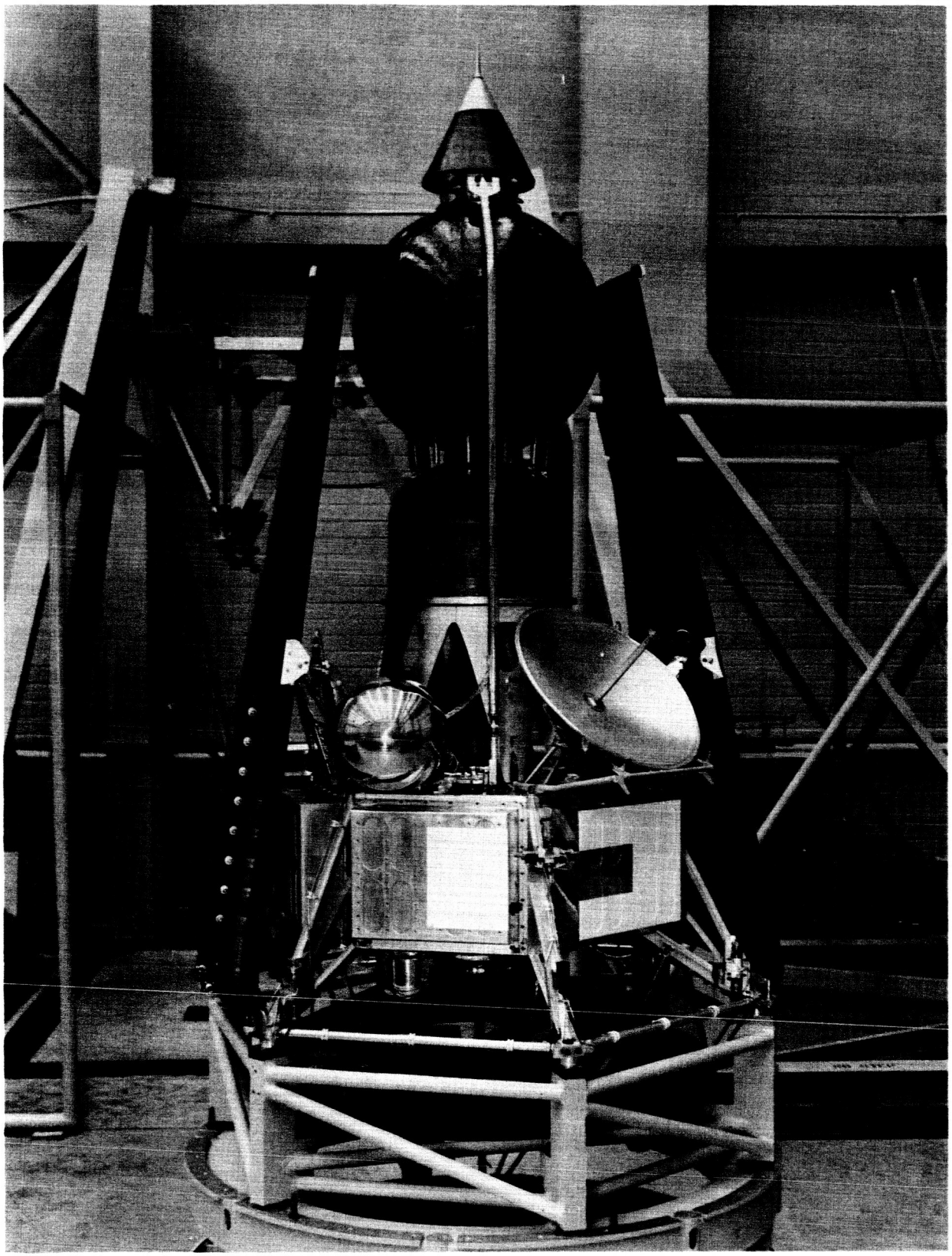

Figure 3.0. Lunar Capsule Assembly Mounted on Spacecraft

d. Spin motor assembly

e. Support and separation structure

f. Altimeter support and erection assembly

g. Power sequencing assembly

h. Wiring harness assembly

i. Retrorocket thermal shield

j. Retrorocket/landing sphere; interconnect & vibration dampers

k. Retrorocket/support; interconnect

3.2 Performance

In order that the primary objective of the lunar capsule may be fulfilled, the following functional events shall take place but not necessarily in the following order:

An altimeter shall be carried as a part of the spacecraft, but in a stowed position so as to fit within the vehicle nose fairing. The altimeter shall, after erection, turn on and warmup, monitor the distance to the lunar surface from the approaching spacecraft and then provide a signal at a predetermined fuzing altitude. The fuzing signal shall initiate the subsequent events. The altimeter shall act as a pulsed radar and shall signal the proper altitude when the return pulse falls within the range gate. The altimeter-generated signal shall initiate both a spin-up system and a separation system so that a solid propellant retrorocket motor may decelerate the lunar landing sphere to impact velocity. The impact velocity will permit survival during the impact of the survival sphere assembly. Spin-up of the assembled retrorocket motor and lunar landing sphere is required to provide spin stabilization to permit the proper velocity vector control during retrorocket motor performance. After burnout of the fixed-impulse retrorocket motor, the power and sequencing assembly shall cause separation of the empty motorcase from the lunar landing sphere.

The lunar landing sphere shall consist primarily of an impact limiter assembly surrounding an integral survival sphere but with attachment flanges on each end (axially) of the limiter. The lunar landing sphere shall be attached by a clamp device to the retrorocket and at the opposite end provides support for an omniantenna which shall previously have been deployed from the forward position on the sphere so that the subsequent events may occur.

After impact, the survival sphere shall cause a seismometer to be oriented along the local vertical axis and the capsule transmitting antenna to be erected into proper position. The seismometer and associated sphere electronics shall obtain seismic data from the lunar surface, condition and transmit these data to the earth using as a part of the communication link the DSIF. (See figure 3.1 for trajectory).

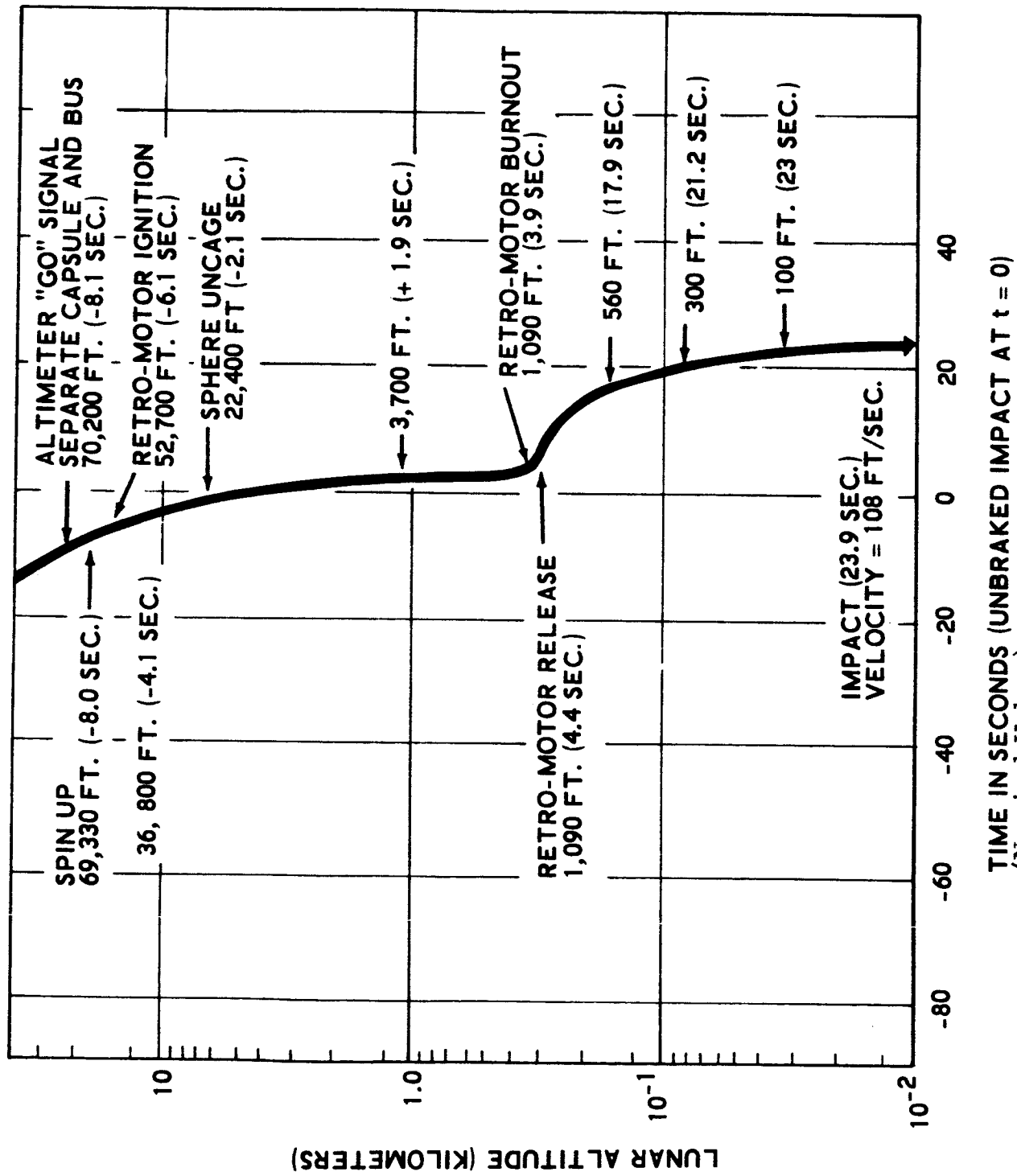

Figure 3.1. Terminal Trajectory
(Nominal Values)

3.3 Physical Characteristics

3.3.1 General

Figure 3.2 illustrates the subassemblies and components which make up the lunar capsule system.

3.3.2 Weight

The total weight of the lunar capsule system shall not exceed 325.0 pounds.

3.3.3 Center of Gravity Location

The center of gravity of the entire system as installed (altimeter in stowed position) on the spacecraft bus shall lie within 30 inches of the bus-support assembly interface. The misalignment of the thrust axis of the rocket motor and the bus longitudinal axis (as defined by the bolt-circle surface) shall not exceed 0.1 degree. Excluding the altimeter and its support structure the capsule center of gravity shall not be displaced more than 0.03 inch from the retrothrust axis.

3.4 Lunar Landing Sphere

The lunar landing sphere consists of that portion of the Ranger vehicle which is released from the Ranger spacecraft (and boost vehicle), spin stabilized, decelerated to a landing velocity not to exceed (for most trajectories) 200 feet per second and which, after landing, places a seismometer in position for obtaining seismic data from the lunar surface for an interval of approximately thirty (30) days. The lunar landing sphere shall also condition and transmit the seismometer data obtained during this time interval to the earth utilizing as a part of the communication link the JPL Deep Space Instrumentation Facility (DSIF).

The configuration shall consist of the following:

a. Impact limiter complete with outer cover, attaching flanges, and inner shell.

b. Survival sphere complete with outer shell, structure, antenna and transmitter, seismometer and associated electronics, venting and temperature control systems, and caging and uncaging systems.

c. Floatation fluid to support the survival sphere within the impact limiter inner shell.

The primary functional requirements of the lunar landing sphere are to:

a. Provide impact survival and structural support of the survival sphere.

b. Accomplish erection to the local gravity vector of the antenna and simultaneously emplace the seismometer in position.

c. Provide insulation and temperature control against the lunar environment of the seismometer and associated data-communication system.

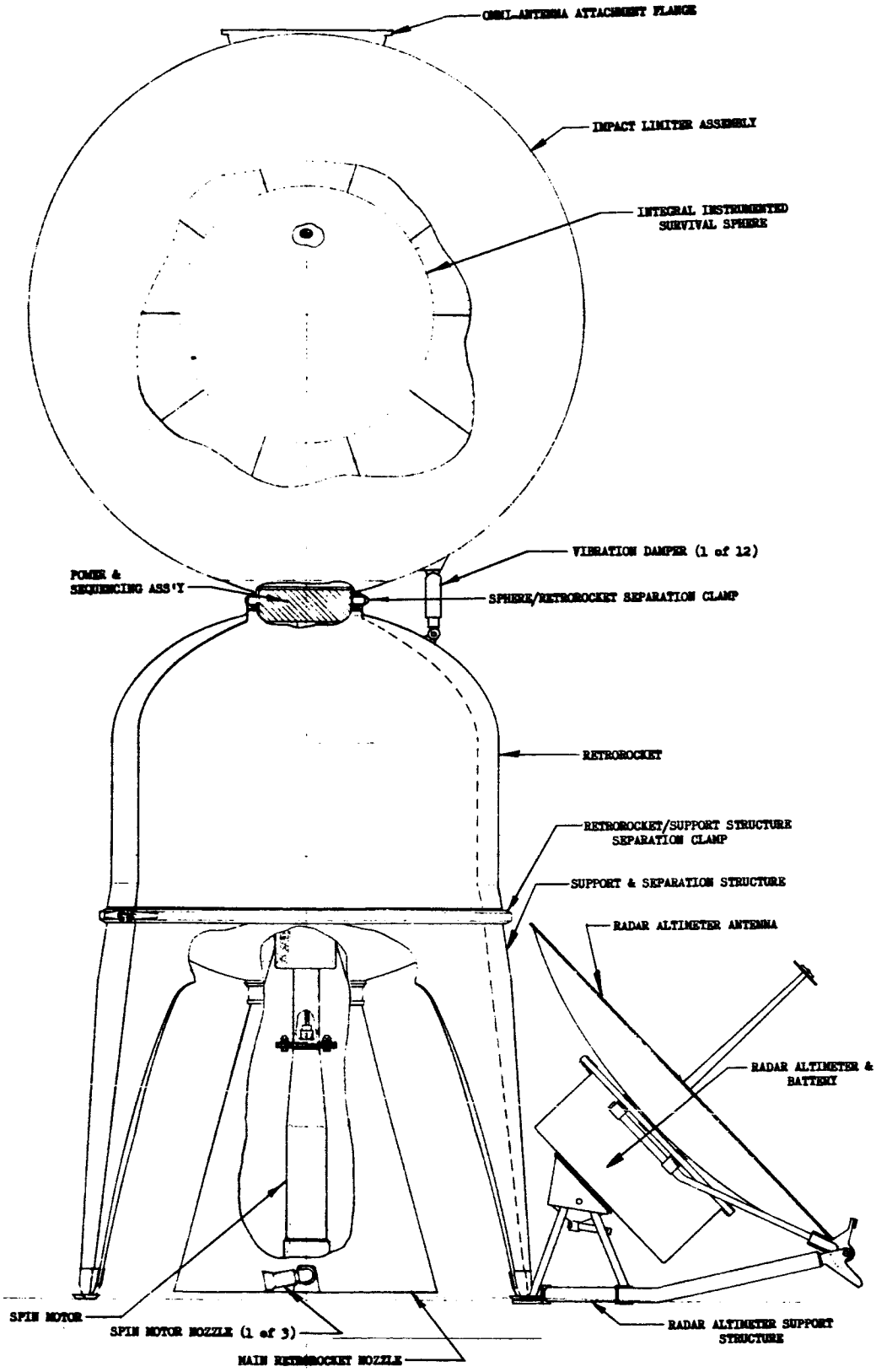

Figure 3.2. Lunar Capsule Assembly

d. Provide for venting of the floatation fluid.

e. Provide the structural support for the spacecraft omniantenna and to support the landing sphere on the retrorocket throughout the launch environment.

3.4.1 Survival Sphere

The survival sphere is a major portion of the Ranger lunar landing sphere. It is that portion which, by utilizing the impact limiter and floatation fluid, is caused to survive accelerations attendant to impact with the lunar surface. The survival sphere shall obtain seismic data from the surface of the moon, condition, and transmit those data utilizing the DSIF at Goldstone Lake.

The configuration shall consist of the following:

a. An outer shell

b. A thermal insulation layer

c. An upper assembly containing the electronics subassembly

d. An antenna block

e. A lower assembly containing a seismometer, battery, water storage, venting, and caging devices.

The primary functional requirements of the survival sphere are to:

a. Provide the structural support for the antenna, electronics, power supply, and seismometer.

b. Provide thermal insulation so that lunar temperatures do not cause the internal temperature to vary beyond the limits 32 to 80°F. The thermal control valve, which vents water vapor during the lunar day, also forms a functional portion of the temperature control system.

c. Provide the means for erecting the antenna to the local gravity vector within the floatation fluid.

d. Expel the floatation fluid by venting through two internally punctured holes (venting system) but without wetting the thermal insulation layer sufficiently to detract from its functioning. The venting action must also vent the floatation fluid from within the seismometer.

e. Provide both a pre-impact uncaging and post-impact caging of the survival sphere within the impact-limiter inner shell.

Physical characteristics of the survival sphere shall be as follows:

a. Total weight of the survival sphere shall not exceed 49.0 pounds.

b. A positive displacement of the center of buoyancy and the center of gravity of the survival sphere shall exist in the approximate amount of 0.5 in. The center of buoyancy shall be so located so as to place the antenna in the uppermost position of the sphere while floated in the floatation fluid.

3.4.1.1 Sequence Timer

The function of the sequence timer shall be to program the sequential events within the survival sphere immediately after the time of lunar impact. A block diagram of the sequence timer is shown in figure 3.3. The sequence timer begins operation near the time of lunar impact when turned on by an external 25G acceleration switch. Simultaneously, the acceleration switch also fires squibs to uncage the inner sphere.

After lunar impact, the sequence timer fires two (2) parallel squibs to cause sphere caging. Next, it fires two (2) parallel squibs to produce sphere venting of the floatation fluid. At thirty (30) minutes from the start, the sequence timer closes two (2) switches for actuation of the seismometer centering motor. It also disconnects itself from the battery power supply at this time.

The timing interval of the clock which drives the timing counter is 1.0 (±20 percent) minutes. The outputs of the timing counter are at the following nominal times:

a. 15 minutes - post impact caging squibs.

b. 16 minutes - sphere venting squibs.

c. 30 minutes - seismometer centering motor switches.

d. 30 minutes - power disconnect switch.

The squibs are protected from accidental firing by a paralleled one (1) ampere fuse.

At a battery voltage of fifteen (15) volts and with a current limiting resistance of 10 ohms, the sequence timer will furnish a squib firing current of not less than 0.8 ampere. A short circuit condition at the squib after it has been fired does not draw over 1.5 amperes for more than 1.0 seconds. Such a short circuit does not adversely affect the operation of the sequence timer.

The sequence timer closes two (2) switches for actuation of the seismometer centering motor.

3.4.1.2 Seismometer Amplifier

This subsection describes the functional performance of the seismometer amplifier which is part of the telemetry equipment in the lunar capsule.

The seismometer amplifier is a part of the equipment landed on the moon and used to telemeter seismic information to the earth. It shall receive its input signal from a seismometer transducer, amplify and condition this signal, and give an output signal to a voltage-controlled subcarrier oscillator. The basic functions are:

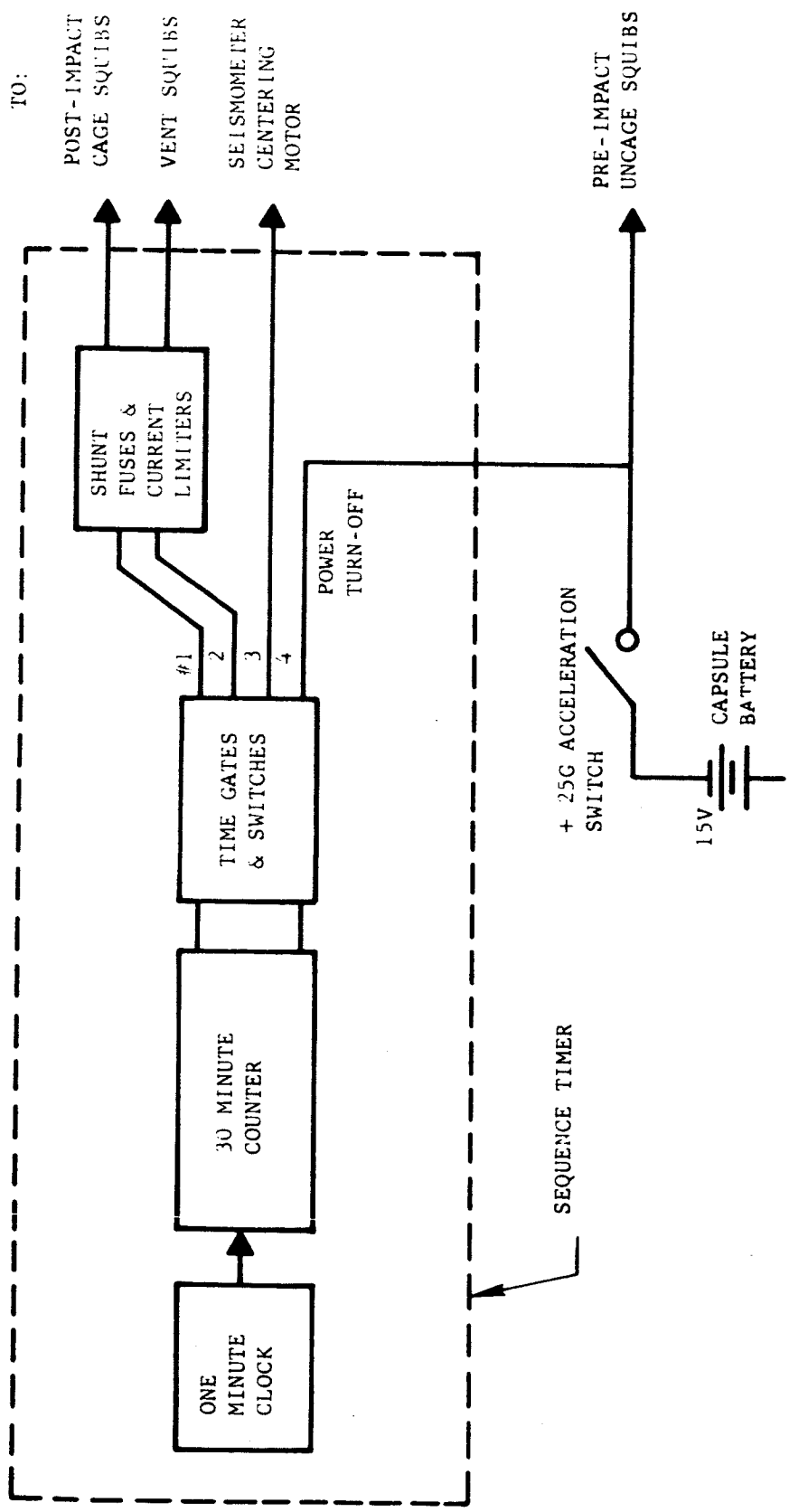

Figure 3.3. Functional Diagram of Sequence Timer

a. Provide amplification of the seismometer signal so that the output is at the correct level for modulating the VCO.

b. Provide amplitude compression so that an input signal whose amplitude is 31.6 times the reference level is reduced to a level no more than ten (10) times the reference level (accuracy ±2 db).

c. Provide attenuation of signals whose frequencies are below 0.05 cps and above 5 cps.

d. Provide amplitude clipping compatible with the requirements of the telemetry link.

3.4.1.2.1 Electrical Characteristics

The electrical characteristics are as follows:

a. Input Impedance

The amplifier is a three-terminal differential-input device. The input resistance from either active input terminal to the third terminal is 1,000 (±0 percent, -40 percent) ohms.

b. Common-Mode Rejection

The common-mode rejection of a signal applied simultaneously to both input terminals exceeds 30 db.

c. Voltage Gain

The high level voltage gain of the amplifier is such that an input signal of 17 microvolts peak to peak at 0.5 cps produces the maximum output signal (clipping level). The low level differential gain is 150,000 ±3 db.

d. Frequency Filtering

The amplifier provides a low-pass and a high-pass filter. The low-pass cut-off is at 5.0 cps (-3 db, ±1 db) and provides approximately 18 db per octave attenuation. The high-pass filter cut-off is at 0.05 cps (-3 db, ±1 db) and nominally provides 6 db per octave attenuation. The frequency response between 0.05 and 5.0 cps is flat to within ±2 db of the 0.5 cps frequency.

e. Output Voltage

The amplifier provides an ac output signal of one volt peak to peak at the clipping level. In addition, it provides a dc output signal which centers the VCO to approximately 560 cps.

f. Linearity

The amplifier when operated with the Ground Adapter gives an amplitude linearity error not greater than ±10 percent of full-scale from a best straight line drawn through zero signal.

g. Noise

The overall noise at the output of the amplifier, when measured in a 0 to 5 cps bandpass, does not exceed 1.0 microvolt peak to peak when referred to the seismometer input terminals. The measurement is taken over a typical 40 second period.

h. Power

The seismometer amplifier operates from a power source of 6 to 7.4 volts dc with a maximum current not exceeding 5 milliamperes and a power source of 15 to 18.50 volts dc with a maximum current not to exceed 0.5 milliamperes.

3.4.1.3 Voltage Controlled Oscillator

This subsection establishes the performance requirements of the voltage controlled oscillator (VCO), which is a part of the telemetry equipment in the survival sphere of the lunar capsule.

3.4.1.3.1 Functional Description

The voltage controlled oscillator shall form a part of the telemetry link to transmit seismic information from the moon to the earth. The VCO shall accept an input signal from a seismometer amplifier and change this information into a frequency-modulated signal, which shall be used to modulate a transmitter.

3.4.1.3.2 Input Characteristic Requirements

The VCO shall have the following input characteristics:

a. Input Impedance - 450 K or greater

b. Modulation Sensitivity - 0 to ±3 volts dc for ±7 1/2 percent minimum frequency deviation

c. Input Intelligence Frequency Response - flat within 1 percent from dc to 8.4 cps

3.4.1.3.3 Output Characteristic Requirements

a. Output Voltage - minimum of 0.3v rms into a load of 25 K ohms.

b. Output Frequency - band 2 per IRIG Document 103-56

Center Frequency	=	560 cps	
Lower Frequency	=	518 cps	(-7 1/2 percent)
Upper Frequency	=	602 cps	(+7 1/2 percent)

c. Amplitude Modulation - less than ±1 db with combined frequency deviation, power supply variation, and temperature variation.

d. Phasing - a positive increasing input signal shall result in an increasing output frequency.

e. Harmonic Distortion - less than 1 percent.

f. Linearity - the curve of output frequency versus input voltage shall be linear to 1 percent of bandwidth when compared with the best straight line drawn through the curve.

g. Frequency Stability - frequency drift due to the combined effects of temperature (+32° to +80°F) voltage changes, and aging shall not exceed 1.5 cps.

3.4.1.3.4 Physical Requirements

The VCO shall conform to Aeronutronics Drawing 805580, in regard to dimensions, mounting provisions, weight, connections, and finishes.

3.4.1.3.5 Power Requirements

The VCO shall operate from a power supply of 6V ±0.1 volts dc. The power supply current required by the VCO shall not exceed 1.0 milliampere.

3.4.1.4 Transmitter

This subsection establishes the design and performance requirements of the transmitter within the survival sphere of the lunar capsule.

3.4.1.4.1 Functional Description

The transmitter shall function as an element in the FM/PM telemetry link to transmit seismic data from the moon to the earth. Other electronic elements of the data communication system are the voltage controlled oscillator, the seismometer amplifier, and the antenna.

3.4.1.4.2 Modulation Requirements

The transmitter shall be phase modulated by an input signal from a VCO. The modulation characteristics shall be:

a. Modulation sensitivity - not more than 0.3 v required for 1.4 radians of phase deviation

b. Input impedance - not less than 25K ohms shunted by not more than 500 picrofarads.

c. Modulation frequency - 518-602 cps
560 cps, nominal

d. Maximum input signal - 1 volt peak to peak

e. Modulation distortion - not to exceed 2 percent from linear operation

3.4.1.4.3 Output Requirements

The transmitter shall have a radio frequency output signal with the following characteristics:

a. Frequency - RA-3 960.150 (±.002 percent) megacycles at 75°F
RA-4 960.250 (±.002 percent) megacycles at 75°F
RA-5 960.150 (±.002 percent) megacycles at 75°F

Frequency change due to temperature shall not exceed 400 cps/°F over the temperature range of 32° to 80°F. Permanent carrier frequency shift due to the lunar impact shall not exceed 3,000 cps.

b. Output power - not less than 50 milliwatts effective radiated power by the matching antenna 45° off axis as described in section 3.4.1.5.

c. Output impedance - matched to antenna to give a VSWR of not more than 1.5.

d. Spurious output - radiated signals at all other frequencies to be at least 20 db below unmodulated carrier signal level.

e. Phase stability - the phase stability of the unmodulated RF carrier expressed as the peak phase error developed in an automatic phase control receiver having a normalized phase transfer function which is:

$$H(s) = \frac{1 + \frac{3}{4B_L} S}{1 + \frac{3}{4B_L} S + 1/2 \left(\frac{3}{4B_L}\right)^2 S^2}$$

where

$$2B_L = \frac{1}{2j} \int_{-J\infty}^{+J\infty} \left[H(S) \right]^2 ds = 20 \text{ cps}$$

shall be less than 0.5 radians.

3.4.1.4.4 Power Requirements

The transmitter shall operate from a battery power supply with the following characteristics:

a. Voltage 15 to 18.5 volts

b. Voltage modulation 1 volt p-p at 560 cps

c. Maximum current 80 ma

3.4.1.5 Antenna

This subsection establishes the performance requirements of the antenna which is used within the lunar capsule survival sphere to transmit seismic data from the moon to the earth.

3.4.1.5.1 Functional Description

The antenna and its dielectric material shall constitute the top portion of the survival sphere. The antenna shall be capable of surviving lunar impact and afterwards capable of transmitting data to the earth. The antenna feed shall be designed to provide low thermal conductivity to the inner sphere. The antenna shall be right-hand circularly polarized. The antenna beam cross section shall be circular about the vertical axis with the major portion of the radiated energy within 45 degrees of the vertical axis.

3.4.1.5.2 Electrical

The antenna shall be used at the nominal frequency of 960 megacycles.

The input impedance shall be nominally 50 ohms to match the transmitter described in section 3.4.1.4. The VSWR shall be less than 1.5 to 960 megacycles when driven from a 50 ohm source.

The on-axis radiation shall be right-hand circular with an axial ratio of less than 1.0 db.

The gain of the right-hand circularly (RHC) polarized radiation component of the antenna shall be measured with the antenna within an impact limiter. The RHC polarized component gain measured anywhere within 45 degrees of the vertical axis shall not be less than 0 db relative to an isolated isotropic antenna.

3.4.1.6 Battery

This subsection defines the performance requirements of the lunar capsule battery.

3.4.1.6.1 Functional Description

The battery shall be mounted within the survival sphere of the lunar capsule. Its principal function shall be to provide power to the electronic subassemblies within the sphere after the time of lunar impact.

3.4.1.6.2 Electrical Requirements

3.4.1.6.2.1 Cell Configuration

The battery shall consist of two (2) modules as shown in figure 3.4. Each module shall contain an isolated 3 volt, 6 volt, and 9 volt section. The leakage resistance between any cells shall not be less than 500K.

3.4.1.6.2.2 Capacity

The minimum ampere-hour capacity of the battery during a ninety (90) day discharge period shall be as shown below:

	Per Modul (amp-hr)	Per Battery (amp-hr)
3 volt output	28.8	57.6
6 volt output	18.9	37.8
9 volt output	30.6	61.2

When the battery sections are connected as shown in figure 3.5, the minimum ampere-hour capacities shall be as shown below:

	Discharge Current (milliampheres)	Capacity (amp-hr)
6 volt output	46	66.6
9 volt output	61	61.2

Not more than two (2) charge-discharge cycles shall be required to achieve the minimum required ampere-hour capacity.

3.4.1.6.2.3 Voltage

The following voltage limitations shall apply to the battery when operated as shown in figure 3.5:

	Maximum (v)	Minimum (v)
6 volt output	7.40	5.80
9 volt output	11.10	8.70

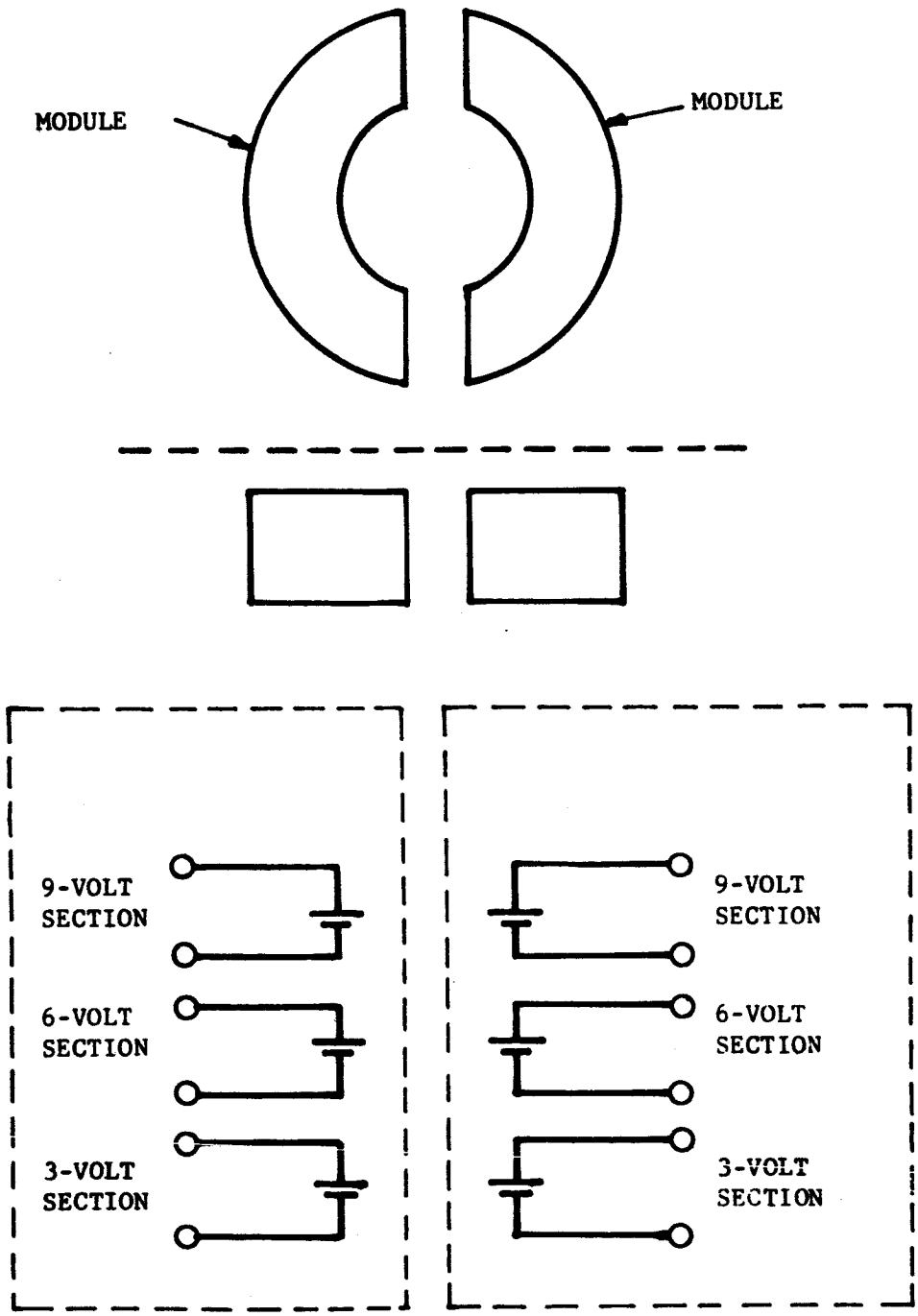

Figure 3.4. Battery Configuration

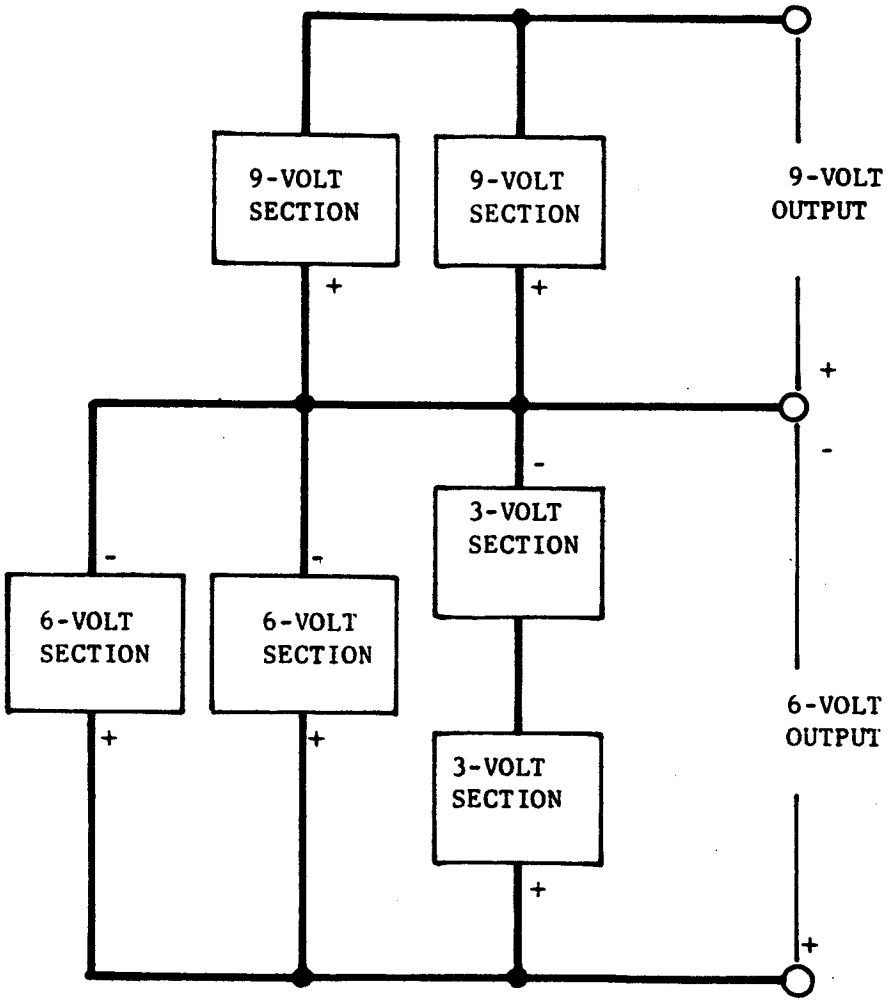

Figure 3.5. Battery Section Connections

3.4.1.6.2.4 Storage

The battery shall be capable of storage in the charged state at a temperature of 25°C for a period of thirty (30) days without a loss of more than three (3) percent of its ampere-hour capacity.

3.4.1.6.2.5 Output Impedance

The output impedance of the battery shall not exceed 0.2 ohm.

3.4.1.6.2.6 Current Transients

The battery shall be capable of furnishing a momentary current of ten (10) amperes for firing ordnance squibs. Such a current shall not exist for over two (2) seconds nor occur more often than once per minute.

3.4.1.6.2.7 Battery Charging Procedure

Each module section shall be individually charged according to the table below. There shall be an automatic voltage cut-off device to terminate the charge at the limiting voltage. The voltage of each section shall be recorded continuously during the charging time.

	PER MODULE		
	3 v Section	6 v Section	9 v Section
Nominal discharged open-circuit voltage (v)	3.20	6.40	9.60
Constant charge current, maximum value (amp)	0.42	0.36	0.42
Nominal charge time (hr)	99.00	59.00	90.00
Maximum charging voltage limit (v)	3.90	7.80	11.70
Nominal charged open-circuit voltage (v)	3.70	7.40	11.10

3.4.1.6.2.8 Accelerated Discharging Procedure

This procedure shall be followed for discharging a battery in approximately fifty (50) hours. There shall be an automatic voltage cut-off device for terminating the discharge at the limiting voltage. The voltage of each section shall be recorded continuously during the discharging time. The table below gives the nominal and limiting discharge parameters for each section of a battery module.

	PER MODULE		
	3 v Section	6 v Section	9 v Section
Nominal charged open-circuit voltage (v)	3.70	7.40	11.10
Constant load resistance, minimum value (ohm)	4.2	12.00	12.00
Nominal discharge time (hr)	50.00	50.00	50.00
Minimum discharging voltage limit (v)	2.90	5.80	8.70
Nominal discharged open-circuit voltage (v)	3.20	6.40	9.60

3.4.1.7 Venting System

This subsection defined the configuration and performance requirements for the survival sphere venting system which forms a part of the lunar landing sphere.

3.4.1.7.1 Description

This assembly is to fire one or more projectiles through the impact limiter to allow venting of fluid to the outside after lunar impact.

The assemblies shall perform satisfactorily under the conditions expected to exist immediately after lunar impact and be able to remain operable under all environmental conditions encountered during storage, shipment, handling, stand-by, preflight, and flight.

a. Barrel Strength

The ultimate strength of the barrels shall be at least 60,000 psi.

b. Action Time

The ignition shall occur in less than 50 milliseconds, as measured from the initiation of the firing current to the penetration through the impact limiter when the venting assembly is fired with 1.0 ampere.

c. Squib Characteristics

The squib shall have a reliability of 0.929 at the 95 percent confidence level when fired with a 1.0 ampere current.

d. Resistance

The squib bridge wiring shall contain a resistance of 2.7 ±0.6 ohms.

e. Insulation

The resistance between the bridge wire and the metallic portion of the barrel shall be 1.0 megohm or greater.

f. Ignition

The charge shall fire when a current of 1.0 ampere or more is applied to its terminals for a duration of 15 milliseconds. It shall not fire when a current of 0.10 ampere or less is applied for five minutes.

3.4.1.8 Caging System

This subsection defines the configuration and performance requirements for the survival sphere caging systems which form a part of the lunar landing sphere.

3.4.1.8.1 Description

The caging and uncaging devices incorporated in the lunar capsule are located in the inner sphere and will functionally cage the floating inner sphere during the full duration of early flight. The device will uncage the sphere just prior to lunar impact and cage again after lunar impact with a time delay sufficient for the floating sphere to rotate to its proper orientation before actuation.

3.4.1.8.2 Performance

The assemblies shall perform satisfactorily under the conditions expected to be existent during the time of operation in flight and be able to withstand all environmental conditions expected to be encountered during storage shipment, handling, stand-by, preflight and lunar impact to the time of the operational period of the assemblies.

a. Pin Strength and Distortion

The ultimate strength of the indexing pins shall be at least 50 lb in compression. The pins shall be able to withstand a bending force of 50 in-lb with less than 0.002 inch permanent deformation.

b. Action Time

The pin motors shall function in less than 15 milliseconds, as measured from the initiation of the firing current to the full extension or retraction of the pins when fired with 1.0 ampere.

c. Cartridge Characteristics

The cartridge shall fire with a reliability of better than 0.93 at the 95 percent confidence level, when energized with a 1.0 ampere firing current.

1) Resistance

Each unit shall contain a single bridge wire, the resistance of which shall be 2.0 ±0.6 ohms.

2) Insulation

The resistance between the bridge wire and the metallic portion of the assembly shall be 1.0 megohm or greater.

3) Ignition

The charge shall fire when a current of 1.0 ampere is applied to its terminal for a duration of 15 milliseconds. It shall not fire when a current of 0.18 ampere is applied for five minutes.

3.4.1.9 Inertia Switch Device

A minimum weight inertia switch is required as a sequence event initiator in the payload package of the lunar capsule. The desired weight is .75 oz. and shall not exceed 1.0 oz.

3.4.1.9.1 Functional Performance

a. The switch must not close when subjected to:

1) Sustained longitudinal acceleration of 0 to 12 G's in any direction.

2) Impulsive acceleration, with time integral up to 60 ft/sec., of up to 100 G's.

b. The switch can close when subjected to 20 G's longitudinal acceleration for more than one second in the preferred orientation.

c. The switch must close when subjected to 30 G's longitudinal acceleration for more than one second in the preferred orientation.

d. Following the above, the switch must withstand 3000 G's acceleration in any direction for fifteen milliseconds without shorting to ground.

e. The switch contacts may re-open, if convenient, (or stay closed) after the acceleration drops to 12 G's.

3.4.1.9.2 Electrical

The contact arrangement shall be normally open with single pole-single throw ability. The switch shall have a current carrying capacity of eight amperes for 100 milliseconds at 28 volts D.C. The leakage current limits across open contacts shall be less than ten microamperes at 28 volts D.C. The switch shall have two terminals or wires that are isolated from ground.

3.4.1.10 Thermal Control Valve

This subsection establishes the requirements on performance, design, fabrication and test for the thermal control valve. The thermal control valve forms a part of the landed-capsule temperature control system.

3.4.1.10.1 General Performance Requirements

a. The general performance requirements are as follows:

1) The term "thermal control valve" as used herein is defined to consist of an assembly of an aluminum cap, aluminum body, inlet, and outlet tube.

2) One thermal control valve per lunar capsule is required.

3) This thermal control valve will be placed in a water vapor vent line between internal tank and external vacuum.

4) Thermal control valve is to be fully operable within the temperature range 32°F to 100°F.

5) A valve open orifice of 0.060 in. diameter is to be maintained.

6) Valve closed leak area should be less than 0.10 percent of valve open area.

7) The valve will support no loads other than that resulting from its mass during acceleration. The valve is not required to function during High G acceleration.

8) Pressure downstream of valve will be hard vacuum. Upstream pressures will be less than 1 psia.

9) Life cycle of valve 90 days during that time 93.0 cu. in. water is converted to vapor and exhausted at temperatures noted in paragraph 6.6.

10) Valve weight to be minimum consistent with satisfaction of function.

3.4.1.11 Position Switch

This subsection defines the performance requirements of a position switch assembly for use in the survival sphere of the lunar capsule.

3.4.1.11.1 Functional Description

The position switch assembly shall consist of two isolated single-pole single-throw switches which are controlled on earth by the attitude of the survival sphere. The switches will be used to keep the sphere electronics turned off during shipping, storage, and handling. The switches will be used to turn on the electronics prior to launch and to keep the electronics on during lunar flight.

3.4.1.11.2 Switching Operations

The switch assembly will be connected within the sphere as shown in figure 3.6. The operation of the switches can best be defined by describing the necessary switching sequence when the unit is installed within a survival sphere.

3.4.1.11.2.1 Ground Operation Sequence

a. Assume the switches are "on" when installed within a sphere (figure 3.7a).

b. The switches shall turn "off" when the sphere is rotated beyond 100° ± 30° from vertical (figure 3.7b).

c. The switches shall turn "on" when the sphere is rotated to within 45° ± 30° from vertical (figure 3.7c).

3.4.1.11.2.2 Flight Operation Sequence

The switch assembly within the sphere shall be mounted upright and be turned "on" before launch. The switches must remain "on" during the launch, space transit, and midcourse maneuver conditions.

3.4.1.11.2.3 Electrical Requirements

The electrical requirements are as follows:

a. The switch contacts shall be isolated from each other and the case by a resistance of not less than 3 megohms.

b. The switches shall be capable of conducting continuously a current of 0.1 ampere. The switches shall be able to break this current in a 20 volt resistive circuit.

c. The maximum closed resistance of a switch shall not exceed 0.2 ohms.

d. The maximum leakage current across open contacts shall not exceed 5 microamperes at 15 volts D.C.

3.4.1.12 Starting Timer

This subsection describes the functional performance requirements for the lunar capsule starting timer, which forms a part of the lunar capsule system.

3.4.1.12.1 Description

The lunar capsule starting timer is to operate during launch and boost phase of the Ranger mission to fire two squib switches, each of which will then shunt the position switches.

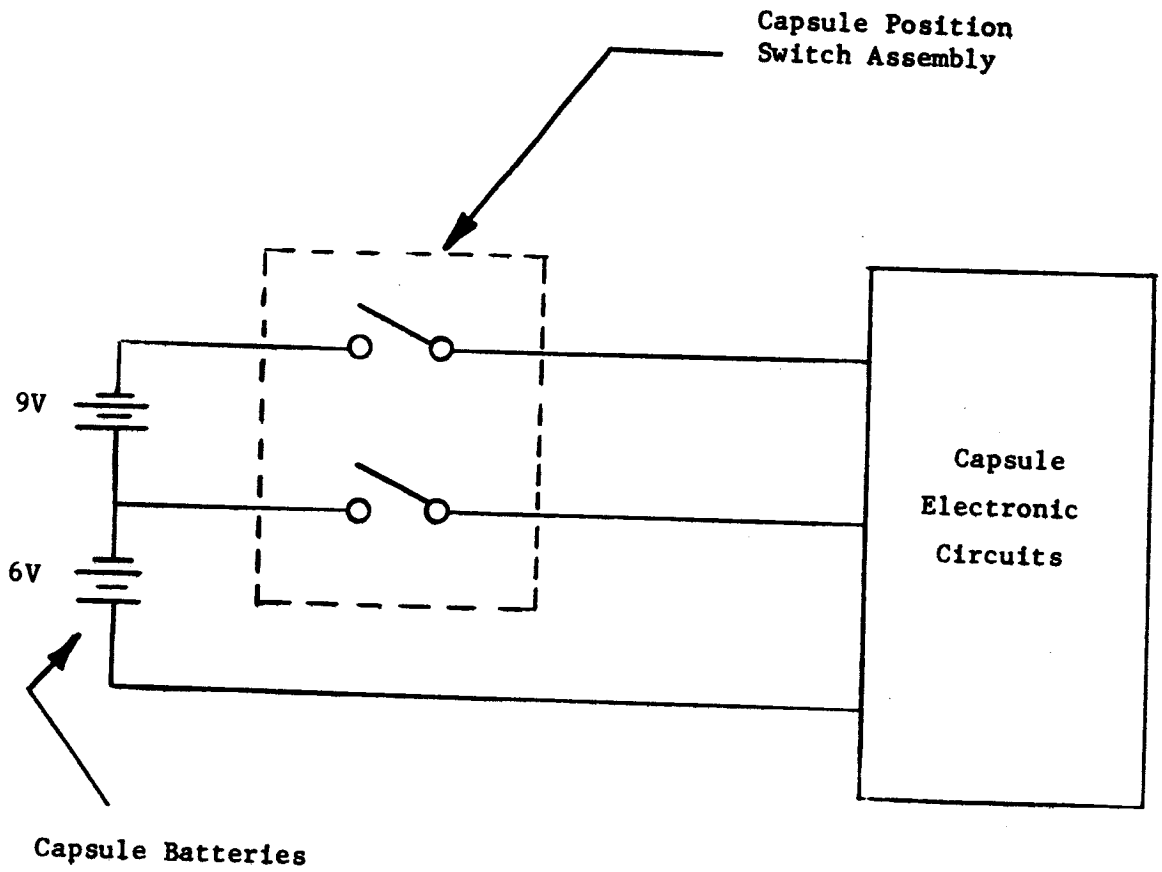

Figure 3.6. Switch Connections

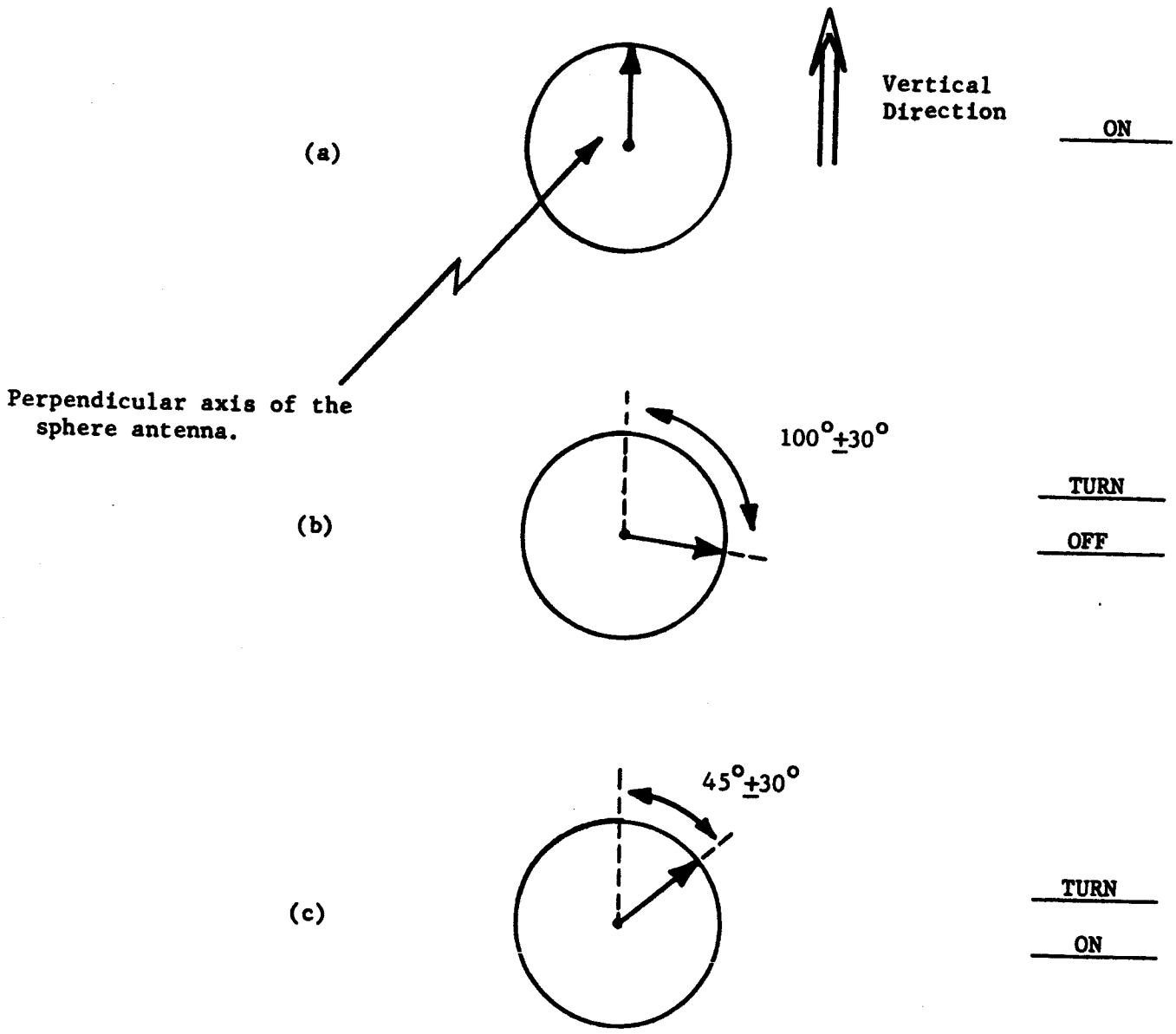

Figure 3.7. Ground Operation Sequence

3.4.1.12.2 Functional Requirements

The function of the starting timer shall be to fire two squib switches when an inertia switch remains closed for a sufficient length of time.

a. Time Interval

With the inertia switch closed, the starting timer shall complete its timing cycle in 1.5 ±0.5 seconds.

b. Reset

The starting timer shall reset to its prestart condition within 400 milliseconds after removal of supply voltage.

c. Supply Voltage

The starting timer shall operate satisfactorily with a supply voltage of 12 to 18.5 volts.

d. Load

The load consists of two National Northern Type M7 squib switches, each with a 10 ohm resistor in series with it. Maximum current required will be 2.3 amperes for 25 milliseconds. Leakage current through each squib switch bridge before firing shall not exceed 1.0 milliampere.

e. Self-Disconnect

The starting timer voltage supply shall be carried through the inertia switch and the normally-closed contacts of one of its squib switches so that when the squib switch is fired, even though the inertia switch remains closed, the circuit will be removed from the battery.

3.4.2 Impact Limiter

This section presents the description and functional specification for the lunar capsule impact limiter.

The impact limiter shall be fabricated, for the most part, of a crushable balsa wood structure transparent to radio frequency energy and surrounding an inner shell containing the floatation fluid and survival sphere. An outer cover shall be provided which is adequate to contain the balsa wood under impact with the lunar surface, either normal or oblique, at velocities up to two hundred (200) feet per second. An interconnect member, adequate to attach the sphere to the retrorocket throughout the flight environment, shall be attached at one end (along the thrust axis) and shall provide a means of separating the landing sphere from the rocket after rocket motor burnout. This separation shall be accomplished by use of a clamp device activated in flight from the power and sequencing assembly. A similar clamp device and attach fitting

shall be provided on the opposite end, along the thrust axis, to support the spacecraft omniantenna. The separation of this omniantenna from the sphere is activated by the spacecraft. Upon impact, the impact limiter material crushes, absorbing the kinetic energy of impact and limiting the acceleration imparted to the survival sphere to a value permitting survival.

3.4.3 Floatation Fluid

This section presents the functional specifications and description of the landing sphere floatation fluid.

The floatation fluid is a mixture of Freon tf and Freon 114B2 with specific gravities of 1.57 and 2.16, respectively, and mixed in the correct proportion to achieve the same specific gravity as the survival sphere. During impact the fluid supports the ball hydrostatically, thus preventing point loadings of the survival sphere from contacting the inner shell of the impact limiter. After impact, the fluid supports the survival sphere until caging.

3.5 Power and Sequencing Assembly

This subsection defines the configuration, the functional performance, and the test qualification requirements for the power and sequencing assembly which forms a part of the lunar capsule system.

3.5.1 Description

The power and sequencing assembly shall consist of a battery power source, two pairs of parallel squib switches, three delay timers, an arming G-switch and associated protective circuitry for sequencing the terminal events just prior to lunar impact (figure 3.8).

3.5.2 Functional Requirements

The functions of the power and sequencing assembly shall be:

a. An arming G-switch isolates the battery supply from the timer and squib circuits until after launch acceleration exceeds a prescribed minimum value.

b. Receive an electric signal from the altimeter on the lunar bus indicating a specific lunar altitude has been reached. This signal will actuate the squib switches which provide power to initiate operation of the delay timers.

c. After a fixed delay, a solid state switch is closed and provides power for firing squibs to ignite the spin motor (Spin Motor Firing Timer).

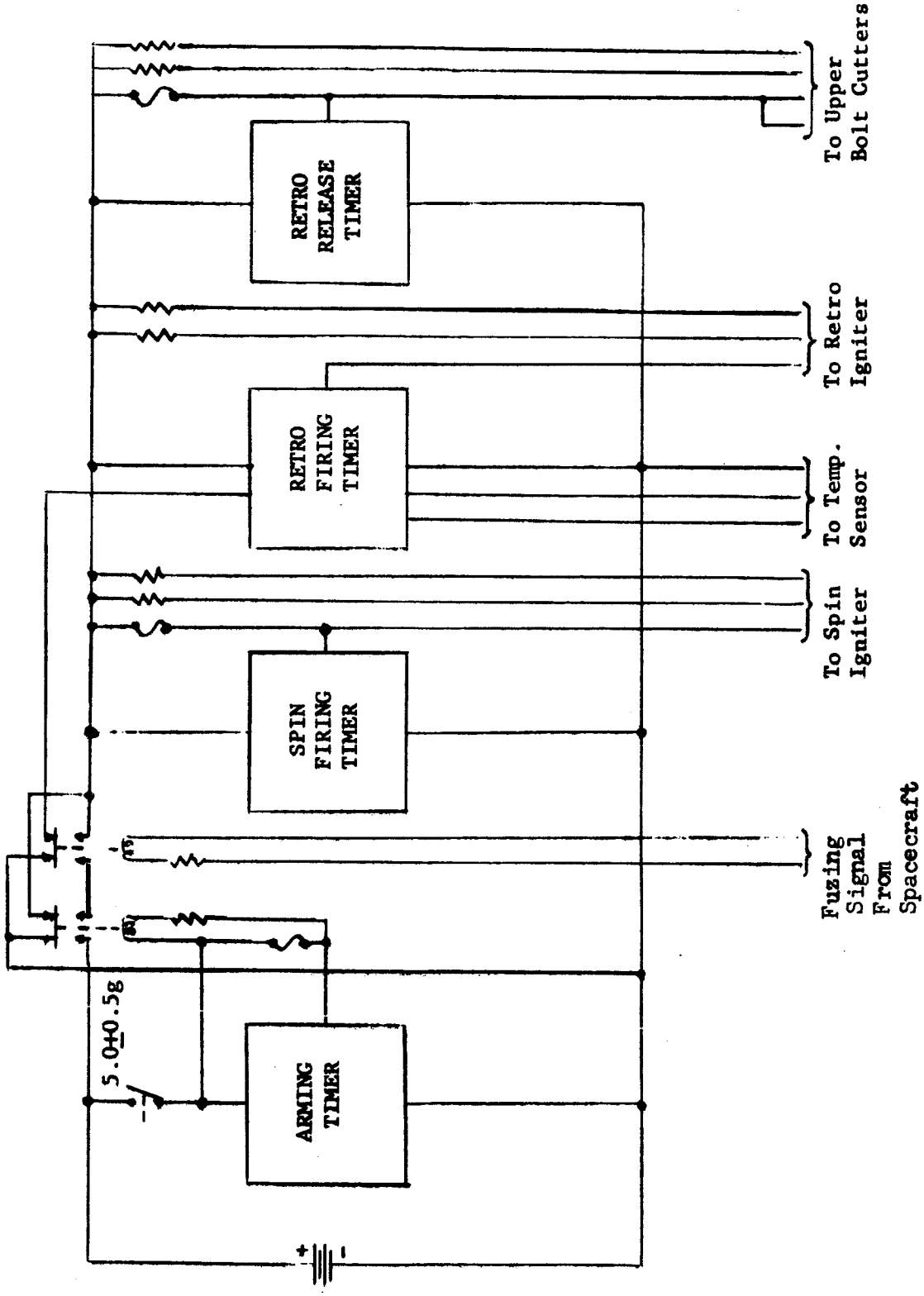

Figure 3.8. Power and Sequencing Assembly, Block Diagram

d. After a time bias determined by the temperature of the retrorocket propellant, close a solid state switch to fire two retrorocket squibs (Retrorocket Firing Timer).

e. After a specified fixed delay from the intitial event, close a solid state switch to fire two squibs, which shall cause the retrorocket to separate from the capsule (Retrorocket Release Timer).

The power and sequencing assembly shall survive during lunar flight to bus separation and shall operate during spin-up and retrorocket firing except for:

a. The spin motor firing timer need not survive spin-up and retrorocket firing and

b. The retrorocket firing timer need not survive retrorocket firing.

The assembly need not survive the lunar impact.

The power and sequencing assembly shall be self-contained, including batteries to operate the switching devices and actuate the specified squibs. Figure 3.8 illustrates the general functions of the assembly.

3.5.3 Arming G-Switch

The arming G-switch is employed as a safety measure for prelaunch handling of spin and retro motors. This G-switch and associated integrating circuitry isolates the motor igniter squibs (and associated timing circuitry) from the battery supply until after the positive axial acceleration exceeds 5.0 ±0.5 g's for a period of 1.5 ±0.5 seconds. After the above acceleration limits have been exceeded, a pair of parallel squib switches connect the battery supply to the input terminals of the altimeter-controlled switch. The G-switch and associated integrating circuitry shall not be activated by any vibration or shock which has an axial acceleration integral of less than 145 ft/sec.

The G-switch-controlled squib switches shall operate on a current of 0.8 ampere or more existing for not less than 25 milliseconds. Switch contact resistance after actuation shall not be greater than 0.1 ohm. Before actuation, the squib switches shall be protected by a shunt fuse of not more than 0.2 ohm which will open within 0.1 second with a current of 2 amperes, but will not open with a continuous current of 0.9 ampere or less. Each squib switch shall have a series limiting resistor which allows a minimum firing current of 0.8 ampere. These resistors shall provide protection against short circuits within the squib firing bridges by limiting the current to not more than 2.0 amperes per switch for not more than 1.0 second.

3.5.4 Altimeter Controlled Squib Switch

The altimeter fuzing signal shall actuate a pair of squib switches to initiate operation of the terminal events of the power and sequencing unit. Each switch shall operate on a current of 0.8 ampere or more

existing for not less than 25 milliseconds. Switch closure must take place within 10 milliseconds after application of the electrical signal. Switch contact shall not be greater than 0.1 ohm. Each squib switch shall have a series limiting resistor which allows a minimum firing current of 0.8 ampere. These resistors shall provide protection against short circuits within the squib switch firing bridge by limiting the current to not more than 2.0 amperes per switch for not more than 1.0 second. Before actuation, the altimeter-controlled squib switches will be afforded shunt protection by the normally closed contacts of the altimeter fuzing relay. Power for the actuation of the squibs shall be derived from the spacecraft's battery.

3.5.5 Spin Motor Firing Timer

The spin motor firing timer provides a fixed delay of 210 milliseconds between actuation of the altimeter-controlled squib switch and application of power to spin motor igniter squibs. The time delay error shall not exceed ±20 milliseconds. The leakage current of the solid state switch which fires the spin motor squibs shall not exceed 1.0 milliampere before gating occurs. The spin motor ignition current shall be a minimum of 1.0 ampere per squib for not more than 100 milliseconds. Prior to actual firing, the spin motor ignition squibs shall be protected by a shunt fuse of not more than 0.2 ohm which will open within 0.1 second with a current of 2 amperes, but which will not open with a continuous current of 0.9 ampere or less.

3.5.6 Retrorocket Firing Timer

The retrorocket firing timer for firing the retrorocket squibs shall have a variable time delay which is determined by sensing the temperature of the retrorocket propellant. The nominal delay shall be 2.0 seconds (from actuation of the altimeter-controlled squib switch) at the predicted mean grain temperature 16°C. The delay shall increase with increasing temperature at the rate of 0.023 sec/°C. Provision shall be made in the design for calibration to a mean grain temperature between 11°C and 21°C and correction coefficient between 0.018 sec/°C and 0.028 sec/°C. Such calibration may be accomplished prior to final assembly. The required linear operating region for the variable delay shall be ±12.5°C about the predicted mean grain temperature. The maximum allowable time delay error (3 sigma value) of the timer, including temperature sensing network error, shall not exceed ±0.05 second at any temperature within the required range. The leakage current shall not exceed 1.0 ma before gating occurs.

Firing current for the retrorocket igniter shall be not less than 1.0 ampere per squib for not more than 100 milliseconds. Shunt protection for the retrorocket igniter squibs will be provided by an external short which opens at bus-capsule separation and to which connections shall be provided in the power and sequencing assembly.

3.5.7 Retrorocket Release Timer

The retrorocket release timer for firing the squibs which separate the retrorocket from the capsule shall have a fixed time delay of 13 seconds after actuation of the altimeter-controlled squib switch. The maximum allowable time delay error shall not exceed ±0.5 second. The leakage current of the solid state switch which fires the separation squibs shall not exceed 1.0 ma before gating occurs. Firing current for the separation squibs shall be not less than 2.0 amperes per squib for not more than 100 milliseconds. Prior to actual firing, the separation squibs shall be protected by a shunt fuse of not more than 0.2 ohm which will open within 0.1 second with a current of 2 amperes, but which will not open with a continuous current of 0.9 ampere or less.

3.5.8 Power and Sequencing Assembly Battery

This section covers technical requirements of a sealed battery pack for use in the Power and Sequencing Assembly (PSA) of the lunar capsule subsystem, as part of the RANGER program.

3.5.8.1 Requirements

3.5.8.1.1 General

The battery described herein is to be part of a Power and Sequencing Assembly. During a brief period of operation at the end of an earth-to-moon flight, it is to supply power for the operation of two timing devices as well as the initiation of four sets of ordnance devices. While the battery need not survive the rough lunar landing, it must operate after launch, boost, earth-to-moon transit and during spin and retro-thrust.

3.5.8.1.2 Electrical

The battery is to deliver power for a period not to exceed 16.5 seconds after closure of a switch connecting the battery to its loads. Open-circuit voltage shall be no greater than 28 volts, and terminal voltage shall be no less than 14 volts at any time during operation. The estimated current drain is 30 milliamperes continuous to electronic circuitry plus three current pulses. The first pulse is of three amperes peak, occurs at the beginning of operation, and is of no greater than one second duration. The second pulse begins approximately two seconds after the beginning of operation and is of the same amplitude and duration as the first. The final pulse occurs at the end of the period of operation, is of 4 amperes peak, and is not to exceed 100 milliseconds duration. It is desirable that the battery be rechargeable for test purposes through at least 5 cycles.

3.6 External Wiring System

This section defines the configuration and the functional performance, requirements for the lunar capsule wiring system which forms a part of the lunar capsule system.

3.6.1 Description

The external wiring system for the lunar capsule is composed of the necessary components (wires, cables, connectors, and junction box) which are used for transmission of electrical signals for controlling terminal events prior to lunar impact. A portion of the system is also used to provide telemetry information to the bus telemetry system.

The cables shall be composed of multiconductor shielded wire. The number of conductors in the various cables is depended upon the requirement of the particular cable. The inner conductors are seven-strand, size 26 copper wire with Teflon low voltage insulation. The shield is 30 gage silver plated copper mesh, with a Teflon wrap where required. Wiring which does not require shielding will be the same type of wire as used for the inner conductors in the shielded cable.

3.6.2 Performance

The external wiring system shall perform the function of interconnecting the following subassemblies: power and sequencing assembly, squib loads, junction box, bus, and altimeter. The functions which are to be performed through these interconnections are as follows:

3.6.2.1 Control

a. Altimeter Antenna Erection

b. Altimeter Turn-On

c. Bus Separation

d. Power and Sequencer Assembly Turn-On

e. Spin Motor Ignition

f. Retrorocket Motor Ignition

g. Retrorocket Motor Separation

3.6.2.2 Telemetry

a. Altimeter Antenna Erected

b. Altimeter Signal Strength

3.7 Retromotor

This section shall serve to define the functional requirements and the configuration for the lunar capsule system retrorocket motor. The retrorocket motor is to be developed and produced by a contractor other than Aeronutronic in accordance with Ford Motor Company Subcontract SC-05850 which is hereby made a part of this specification.

3.7.1 Description

The retrorocket motor is required to serve as the prime mover of a vehicle weighing approximately 290 lb. The motor with suitable attach devices shall serve as a primary structural member of the lunar capsule system in such a way that separation from the spacecraft structure may occur and separation of the accelerated payload may also occur. The lunar capsule system shall include means of providing a rotational velocity of approximately 300 rpm as a means of stabilizing the retrorocket/payload velocity vector. The retrorocket shall also serve as the structural support for the spin system so that subsequent jettisoning of the spin system can occur.

3.7.2 Requirements

The retrorocket motor shall utilize a solid dual-base propellant, provide a thrust level of approximately 5500 lb, have a nominal burning time of approximately 10 sec, support a payload weight of approximately 92 lb mounted along the thrust axis on the head end of the motor, accelerate the payload in gravity-free vacuum space to approximately 8816 feet per second, meet the environmental requirements of Aeronutronics Specification LCS-003 and be of nearly symmetrical configuration so that a condition of dynamic balance may be achieved.

3.8 Support, Spin and Separation System

This section shall serve to define the requirements for support of the retrorocket motor and lunar landing sphere assemblies and the requirements for spin and separation of those assemblies from the Ranger spacecraft. It shall specify the functional performance requirements of these subsystems.

3.8.1 Description

The lunar capsule support and separation assembly is required to attach the lunar capsule to the bus from which the capsule separates for the terminal maneuver. This assembly serves as the primary structural member for transmitting loads from the bus to the capsule. The separation device will detach the capsule from the bus upon receipt of a signal from the altimeter. The support structure is, in fact, fabricated in two portions: one portion attaches to and becomes a part of the retrorocket motor case and one portion which bolts to the spacecraft bus and, in flight, remains with the bus after separation. Separation is accomplished by releasing both or either one of two bolts which attach a marmon clamp across the separation joint.

To stabilize the retrorocket motor velocity vector to the attitude (provided by the spacecraft) required for landing, a spin motor is attached to the retrorocket motor/lunar landing sphere assembly and causes a rotational velocity of 285 +15 -0 rpm. The spin motor is mounted so that the spent motor case can be jettisoned shortly after retrorocket motor burnout. The initiation circuits for spin-up, separation, and the

retrorocket motor shall be provided with arming circuits (either on the spacecraft or the lunar capsule assembly) so that inadvertent operation of these systems cannot occur.

3.8.2 Performance

The forward end of the support assembly, which lies forward of the separation plane, is attached to the rocket motor case continuously about the circumference of the case. The misalignment of the bus longitudinal axis (as defined by the bolt-circle of bus) and the thrust axis of the rocket motor shall not exceed 0.1 degree. Exposure to the environments of Aeronutronics Specification LCS-001 shall not produce an additional misalignment which exceeds 0.1 degree. The separation process shall not produce a capsule angular rate which exceeds 0.04 radian/sec.

3.8.3 Spin Motor

This subsection defines the configuration and the functional performance requirements for the solid propellant spin motor which forms a part of the lunar capsule system.

3.8.3.1 Description

The spin motor assembly is required to develop and deliver to the retromotor, lunar landing sphere assembly a torque to accelerate this assembly to a spin rate of approximately 285 + 15 -0 rpm. The spin axis is to be coincident with the retrorocket thrust axis.

The spin motor unit will consist of one firing chamber with a solid propellant grain cast in place and an insertable igniter plus a manifold assembly to which is attached three exhaust nozzles. The nozzles will be canted so as to deliver forward impulse to the assembly as well as torque. Torque is delivered to the retromotor/lunar landing sphere assembly through the retromotor nozzle by slots cut into that nozzle through which the spin motor nozzles protrude.

3.8.3.2 Performance

The spin unit ignition is sequenced by a signal from the altimeter. The unit must ignite promptly and reliably upon receipt of the signal. The desired minimum probability of ignition is to be 0.995 at the 95 percent confidence level. Nominal performance requirements in the spin motor are as follows:

a.	Spin torque impulse:	Approximately 70 ft-lb-sec
b.	Thrust impulse:	Approximately 20 lb-sec
c.	Duration:	Maximum of 1 sec
d.	Alignment:	Motor design and alignment must be such that torque vector misalignment with respect to rocket centerline does not exceed 0.006 radians

e.	Direction of rotation:	Clockwise, looking up the nozzle of retrorocket

3.8.3.3 Configuration and Physical Characteristics

The total weight of the spin motor system, in the flight readiness condition, complete with igniter, igniter lead, and attach devices shall not exceed 2.4 lb.

3.9 Thermal Radiation Shield

This section shall serve to define the configuration the functional requirements for the lunar capsule thermal radiation sheild. The thermal radiation shield is intended primarily to supply shielding of the retrorocket motor during the lunar transit trajectory.

3.9.1 Description

The thermal radiation shield is to consist of a skirt-like assembly of low emissivity membranes surrounding the retrorocket and retrorocket support structure in such manner as to restrict the flow of heat, as thermal radiation, from the retrorocket assembly to space.

The thermal radiation shield is to be so disposed, at the time of release of the lunar capsule, as not to interfere with the release functions.

3.9.2 Performance

Effectiveness of the shield system is to be such that the heat loss rate of the retrorocket, when exposed to dark space, will be less than 6.8 Btu/hr.

3.10 Lunar Capsule Altimeter

3.10.1 Requirements

3.10.1.1 General

The altimeter desired is of the fuze type, to operate during the last portion of an earth-to-moon flight. It is to start operation upon receipt of a command signal and deliver a single output signal (designated "fuzing signal") at a prescribed altitude (designated "fuzing altitude"). The altimeter will not be separated from the bus and hence will be destroyed upon impact with the moon. It must, however, operate satisfactorily after experiencing launch, boost, and earth-to-moon transit conditions.

3.10.1.2 Performance

3.10.1.2.1 Starting

The altimeter shall start within one second after receiving a start signal voltage step of 18 to 30 volts. Access to the activating device will be through two external terminals, both of which are isolated from chassis ground.

3.10.1.2.2 Frequency

The altimeter will have a carrier frequency in X-band, at or near 9.4 gigacycles. The altimeter shall not cause any interference with other rf equipment on the bus operating in the vicinity of 890 and 960 mc.

3.10.1.2.3 Measurement and Modulation

Measurement of the fuzing altitude shall be by means of a fixed time delay range gate. The pulse repetition rate shall be 600 pps or less to minimize the possibility of range ambiguity.

3.10.1.2.4 Starting Altitude

The altimeter is to be started at a time before bus impact such that warm-up will be complete at an altitude of not less than 180,000 feet. Taking trajectory-time errors into account, the maximum altitude at which warm-up can be complete is 650,000 feet. Ranging shall not occur more than 15 seconds before completion of warm-up.

3.10.1.2.5 Descent Rate

During the time of operation of the altimeter, the average approach velocity to the moon will be between 8400 and 9400 feet per second.

3.10.1.2.6 Fuzing Altitude

The precise fuzing altitude will vary with descent rate, but will be between 61,800 and 81,800 feet. The altimeter shall contain provision for laboratory variation of fuzing altitude over a range of ±5 percent. The nominal fuzing altitude is 67,379 feet for RA-3.

3.10.1.2.7 Accuracy

The altimeter shall provide a range resolution accuracy such that the cumulative errors from all effects (range measurement, antenna boresighting errors, switching time, etc.) shall result in a three-sigma measurement error of no greater than 500 feet at the fuzing altitude.

3.10.1.2.8 Warm-Up Time

Warm-up time shall be such as to minimize over-all altimeter weight.

3.10.1.2.9 Operating Time

The altimeter shall operate and be capable of delivering a fuzing signal for a period of not less than 15 seconds following warm-up.

3.10.1.2.10 Output Signal

At the fuzing altitude the altimeter shall supply the fuzing signal to the power and sequencing assembly and the spacecraft/retro-rocket separation squibs by connecting the spacecraft's power source to the using circuits. The fuzing connection thus made shall be capable of handling 10 amperes for one second.

3.10.1.2.11 Power Supply

The power supply, including batteries, converters, and regulators as necessary for altimeter operation shall be an integral part of the altimeter system.

3.10.1.2.12 Antenna

Development of the antenna is part of the altimeter development task. The antenna is to be erected after the completion of terminal maneuver (35 minutes before landing). The erection mechanism will attach to the bus structure. When the antenna is in the operating position, it will project over the side of the bus and its beam axis must be parallel to the roll axis of the spacecraft. The antenna beam axis shall be within 0.25° of normal to a reference plane defined by three points on the antenna structure. Mounting of altimeter electronics and power source is integral with the antenna.

3.10.1.2.13 Testability

Provision is made for operating tests of the altimeter by application of external power and making a minimum of measurements. Test points are made available within the altimeter for monitoring of the video output.

3.10.1.2.14 Sensitivity

Sensitivity of the altimeter shall be that required by the requirements of the preceding 13 paragraphs.

3.10.1.2.15 False Fuzing

The altimeter shall have a probability of false fuzing, from maximum starting altitude, of not greater than one percent.

3.10.1.2.16 Lunar Reflectivity Telemetry

The altimeter shall generate a dc voltage of ±2.5 volts which is directly proportional to the amount of reflected self-generated energy from the surface of the moon. This voltage will be brought out to the capsule junction box for use by the spacecraft's telemetry system and shall have a nominal output impedance of 2.7K ohms,constant through the voltage range.

3.10.1.3 Physical

3.10.1.3.1 Weight

The weight of the entire altimeter, including its antenna, but not including the support and erection structure, shall not exceed six pounds.

3.10.1.3.2 Configuration and Mounting

ADF Drawings 800019 and 801200 show the mounting provisions and dimensional restrictions.

3.10.1.3.3 Finish and Environmental Parameters

The exterior finish of the altimeter shall be that determined to be best suited to the expected environmental conditions. From pre-flight handling through the time at which the spacecraft reaches fuzing altitude, the altimeter will be subjected to a wide range of environmental conditions. Environmental control shall be incorporated in the altimeter design as necessary to ensure reliable performance during its period of operation. Influential in the design for environmental conditions is the actual altimeter mounting and the amount of exposure to sunlight resulting therefrom. These requirements are outlined in Aeronutronics Specification LCS-001A, "Specification for Lunar Capsule Program Environmental Requirements".

3.10.2 Altimeter Battery

This subsection covers the technical requirements of a sealed battery pack for use in the lunar capsule altimeter.

3.10.2.1 Requirements

3.10.2.1.1 General

The battery desired is to be a sealed unit for use in a pulse-radar altimeter. It is to provide power for a period of time up to two minutes in the last portion of an earth-to-moon flight. The battery will be destroyed upon impact with the moon, but it must perform satisfactorily after experiencing launch, boost, and earth-to-moon transit conditions.

3.10.2.1.2 Electrical

The battery is to operate for a period of two minutes. During this operating time, terminal voltage shall be not less than six nor more than nine volts. Current drain during operation is expected to be 4.5 amperes nominally and five amperes maximum. It is desirable that the battery be rechargeable for test purposes through at least 5 cycles.

3.10.2.1.3 Physical

The battery shall be of such a size and geometric configuration as to fit within a right parallelepiped 1 5/8" H x 1 1/8" W x 2 3/4" L, including terminal projections. Weight is to be the minimum consistent with the expected environmental conditions. The case is to be hermetically sealed. Electrical terminals shall be 4-40 x 3/16" studs, marked to identify polarity.

3.10.2.1.4 Environmental

Environmental conditions will be as described in Aeronutronics Specification LCS-001A, except that temperature limits are +10°C to +70°C and neither solar radiation nor radiation to 0°R will be encountered.

3.10.2.1.5 Sterilization

The battery shall be rendered biologically sterile.

3.10.2.1.6 Shelf Life

The battery shall be capable of performance as specified in 3.2 after storage between 0°C and 50°C for 60 days. Re-charging before use is a permissible condition for meeting this requirement.

3.11 Altimeter Support and Erection System

This section shall serve to define the configuration and the functional requirements for the altimeter.

3.11.1 Description

The purpose of this structure is to support the altimeter antenna during all phases of the flight. The assembly is attached by four bolts at the bus interface. During launch and transit phases the antenna will be in a nested position so that the antenna assembly is within the shroud clearance envelope. At some time between the beginning of the bus terminal maneuver and altimeter turn-on, the antenna is erected so that its primary axis is parallel to the roll axis of the bus and its forward direction is toward the lunar surface. The signal for erection will be supplied by the spacecraft. Erection shall be accomplished by

releasing a spring torque working across the hinge joint. The releasing will be accomplished by redundant pyrotechnic devices. Provision shall be made to provide for carrying electrical signals to the altimeter in both the stowed and erected positions. Provision shall also be made to latch the deployed antenna in the erected position.

3.11.2 Performance

The altimeter support structure shall be capable of supporting the altimeter, with antenna for all flight loads including those of vibration and shock. Erection and release shall have a minimum desired reliability of 0.995 at the 95 percent confidence level. The electromechanical release device shall be redundant in order to meet this requirement. Deployment shall be accomplished in 5.0 ±0.5 secs from the instant of release in the stowed position.

Alignment marks are to be provided on the antenna which define a plane at right angles to the electrical axis of the antenna within 0.25°. The plane represented by these marks shall be aligned with the roll axis of the bus within 0.35 degree on assembly. Exposure to the environments given above shall not cause these axes to be misaligned by more than an additional 0.35 degree. The effects of latch tolerances are included in the above misalignments. All disengage and engage latches must operate promptly and reliably. The disengagement signal will be provided by the spacecraft.

3.11.3 Physical

The support and erection mechanism must hold the antenna (in nested position) so that this entire assembly is contained within the envelope shown in ADF Drawing 803211C and so that it does not interfere with the capsule and its support structure and the omniantenna support assembly. The guide rails shall not interfere with the deployment motion and shall prevent contact between the Lockheed Shroud and the altimeter antenna at shroud separation. In the erected position, this assembly shall not interfere with, or the antenna's field of view be restricted by, any of the spacecraft equipment. Attachment points consistent with antenna support points shall be provided. The total weight of this support and erection assembly shall be no greater than 2.72 pounds.

In the fully erected position, the support and erection assembly shall close a switch, which is considered a portion of the support and erection assembly, to provide an electrical indication of the completion of erection. Resistance between switch terminals shall be not less than 500,000 ohms in the open condition and no more than 1 ohm in the closed condition.

(Insert in Spacecraft Design Specification Book)

APPROVED:

System: M. R. Mesnard

Subsystem: W. J. Lane

JET PROPULSION LABORATORY

Spec. No. RA345-4-150
17 January 1962

FUNCTIONAL SPECIFICATION
RANGER RA-3 THROUGH RA-5 SPACECRAFT
VEHICLE INTEGRATION

1.0 SCOPE

The functional requirements for the integration of the Ranger A-3, A-4 and A-5 spacecraft with the Atlas-Agena system are covered in JPL Specification No. 30331, Detail Specification, Ranger Spacecraft Vehicle System Integration, Requirements and Restraints, (Classified).

(Insert in Spacecraft Design Specification Book)

original

APPROVED: M. R. Mesnard
System John R. Casani
Subsystem W R Woods

JET PROPULSION LABORATORY

Spec. No. RA12345-4-170
28 November 1960

FUNCTIONAL SPECIFICATION

STANDARDS FOR RANGER SYSTEM TEST EQUIPMENT

1.0 SCOPE

1.1 This functional specification provides guidelines for all system test equipment and covers requirements for its design, fabrication, procurement, and usage.

2.0 APPLICABLE DOCUMENTS

2.1 The following documents apply to this specification; as of the date of issue, and form a part of this specification:

SPECIFICATIONS

Jet Propulsion Laboratory

14902	Wiring, Ground and Missile Electronic Equipment
20014	Soldering Processes, General Specification
20015	Potting of Connectors
20016	Workmanship Requirements for Electronic Equipment, General Specification

20018	Cable Assemblies, Fabrication of, General Specification
20025	Contractor Quality Control Requirements
20026	Components, Installation of
20027	Components, Securing of
20028	Printed Circuit Boards, Fabrication of
30505	Environmental Specification for Ground Support Equipment
30600	Paint Standard on NASA Ground Equipment
30601	Racks for Ranger Program
30602	Engraving on Ground Equipment
30603	Knob Standard for Ground Equipment (single turn)
30604	Meters for Ground Equipment Control Panels
30605	Colors, Indicator Light and Switchlite

DRAWINGS

Jet Propulsion Laboratory

4-101343	Standard Electronic Console Ranger System Test (sketch)

3.0 FUNCTIONAL REQUIREMENTS

3.1 Conflicting Requirements

Any conflicting requirements arising as a result of out-of-house procurement, between this specification and any other pertinent specification, or drawing listed herein shall be resolved by writing to the JPL cognizant engineer.

3.2 Requests for Deviation

Any change from the requirements set forth by this specification or by applicable drawings, referenced specifications, other publications, materials, and processes specified herein shall be considered to be a design change or deviation, and shall not be allowed except with the prior approval from the JPL cognizant engineer.

3.3 Parts, Materials, and Processes

Parts, materials and processes used in the design, fabrication, and assembly of the test equipment covered by this specification shall conform to the applicable document herein.

3.4 Selection of Parts

The JPL Preferred Parts List of acceptable component parts contains parts applicable to all JPL electronic test equipments for which reliability is a major consideration. These preferred parts are applicable to equipments fabricated by out-of-house sub-contractors as well as those fabricated in-house (JPL). The JPL Preferred Parts List is available upon request from the Component Parts Evaluation Group.

3.5 Design

3.5.1 Design Approval

The final design shall be approved by the JPL cognisant engineer prior to fabrication, and any design change shall be approved by him prior to a production or prototype run.

3.5.2 Cooling

Appropriate cooling fans, and/or refrigeration shall be installed if, and as required to prevent improper operation or malfunction of test equipment due to local heat sources.

3.5.3 Color and Color Distribution

Test equipment finishes shall be NASA Light Blue, NASA Dark Blue, and White.

a. Racks. All racks, and rack-mounted equipment will be NASA Light Blue. Paint need be applied only to those surfaces visible under normal operating conditions.
b. Panels. All panels on such equipment will be light blue. Commercial test equipment shall have light blue front panels.

c. Enclosures. Enclosure walls will be dark blue. Enclosure ceilings will be white, and floors will normally be unpainted.

3.5.4 Paint Specification

Reference is made to NASA Standard Spec. 30600 for details of the paint finishes, type, and color samples.

3.5.5 Standard Racks

The standard system test equipment rack for the Ranger Program will conform to JPL Drawing 4-101343. This equipment is specified in NASA Standard Spec. 30601

Type 1 - Standard system test equipment rack for the Ranger system test equipment

3.5.5.1 Requirements

a. Type 1 - (1) Overall dimensions are 50.5 inches high by 24 inches wide by 28 inches deep.

(2) Panel area is recessed 2 inches and measures 19 inches by 40.25 inches.

(3) Rack is mounted on 3-inch casters

(4) Rear access door has flush latch.

(5) Rack has removable end bells to facilitate ganging of racks.

(6) Equipment is mounted to RETMA angle, front and rear.

(7) A JPL identification tag shall be placed on each bay of racks in each position. Equipment title, serial no., date, and drawing no. shall be marked on this tag.

(8) Individual chassis identification tags shall be placed on the inside surface of each rack rear access door. This tag shall contain chassis title, serial no., date, and schematic no.

(9) All racks for test equipment should have JPL identification tags placed on the outside, giving the schematic numbers and assembly numbers of units to be mounted therein.

(10) A list of applicable prints, reports, and pertinent data should be attached to the inside, or rear access door of the rack-mounted equipment

3.5.6 Console & Panel Layout

The JPL Human Engineering group should be consulted prior to the fabrication of test consoles and panel layouts to insure that these items are consistent with current human engineering design principles and practices.

3.5.6.1 Communications, Intercom Layout

Each test position should allow 3½ inches of vertical panel space for intercom equipment. This equipment will be the standard MOPS type equipment, the same as used at AMR and will be furnished complete with central power supply, central line amplifier and necessary end instruments for all system test equipment. No provision for the MOPS system need be made in individual system test equipment for any power, wiring, etc. Only the above mentioned 3½ inches of panel space, and access for connecting cables through the rear power panel to the intercommunications panel chassis need be provided.

This equipment will allow communication between various test positions and also the spacecraft test junction box. Each end instrument will have a head set with 20 feet of connecting cable to allow utilization within a 20-foot radius of the rack-mounted panel.

3.5.6.2 Engraving, Control Panel Faces

Engraving is specified per NASA Standard Spec 30602, except that this specification is applicable to in-house (JPL) or out-of-house fabricated equipments but not to commercial test equipment, normally procured as a package and set into a rack "as is". On such equipment, only color of markings, equipment finish, and finish of panel faces is stipulated.

3.5.6.3 Panel Accessories

Panel accessories of the following types are applicable to all in-house (JPL) or out-of-house fabricated equipment, excepting only commercially-procured test equipment used on an "as is" basis.

a. Standard Control Knobs - Single turn, NASA Standard Spec No. 30603

Application	M.S. Number	Electronic Stockroom No.
Controls requiring twirling or spinning, with knob position not a critical item of information.	MS 91528-2N2D	Knob 102
For Position Setting	MS 91528-1P2D MS 91528-2P2D	Knob 110 Knob 111
	Raytheon Knob Number	
For position Setting only for controls requiring excessive leverage to operate	231-115402	

b. Meters - NASA Standard Spec 30604. The following series of removable lens meters, manufactured by General Electric, should be specified for use in all test equipment. These meters are stocked in JPL electronic stores.

MANUFACTURERS'S IDENTIFICATION

Meter Size	D.C. Meters	A.C. Meters
2½"	DW 91	AW 91
3½"	DO 91	AO 91

c. Indicator light and switchlight colors - NASA Standard Spec 30605. This spec is applicable to all equipment, both JPL produced and commercially purchased.

The following three colors shall be used to indicate operating conditions or situations in Ground Equipment:

(1) RED shall indicate "DANGER", or "WARNING", or "NO GO situations.

(2) GREEN shall indicate "SAFE", or "READY TO PROCEED", or "GO" conditions.

(3) WHITE shall be an information light, indicating equipment operating, etc.

3.5.7 Plugs and Connectors

It is mandatory that all input and output connectors to the test equipment be terminated in plugs mounting on the rack power panel. This panel is to be a part of the test equipment rack located immediately below the rear access door. This shall apply to all incoming and outgoing signal and test leads, input power, and the plugs necessary to accomodate the "MOPS" intercom cabling. Only in cases where functions are so critical as to preclude this technique, will deviations to the accepted standard be permitted. The power panel connectors shall be appropriately marked to correspond to the mating test cables.

3.5.7.1 It is not mandatory that each individual rack have its own power panel as in many cases all 2 or 3 racks in one position may bring their external leads out through one panel physically mounted in one rack and interconnected to the other racks internally. Plug types should be coordinated with the cable group who will furnish all connecting test cables.

3.5.8 Power Source

All equipment should operate normally when supplied from 117 $\pm$ 3 volts, 60-cycle, single phase only.

3.5.8.1 Independent Operation Capability

The ability to self-power subsystems in the spacecraft from the system test equipment at times when basic spacecraft power is not available, or for individual trouble shooting operations on subsystems is required. It will, therefore, be a requirement that each susbsystem test position be so equipped to be capable of providing this independent operation through a special cable to be plugged into the appropriate S/C subsystem directly, at such times as individual testing without the rest of the S/C proves desirable. The power supplied from the system test equipment to the subsystem under these conditions shall be the regulated voltages necessary to operate the subsystem independently and not necessarily the basic 31.5-volt. input to the subsystems converter if it is located in the same package. The provision of this input power through the direct access system test cable is specifically not desirable since this poses a potential hazard to the rest of the spacecraft by allowing test equipment supplied power possibly to get into other subsystems through spacecraft wiring. It is

also possible that the technique of introducing voltages through the system test cable and plug could result in a paralleled power source if main spacecraft power is turned on while still supplying power from the test equipment. Only by disconnecting the power plug from the spacecraft harness during this operation can it be assured that no other subsystems in the spacecraft will be affected.

3.5.9 Wiring and Cabling

All wiring and cabling shall conform to JPL Specification 14902.

3.5.9.1 Grounding

The following techniques for grounding shall be adhered to both in design and fabrication of system test equipment and associated cabling so as to eliminate, insofar as possible, all potential ground loop and polarity problems between test equipment and the corresponding subsystem.

3.5.9.1.1 All test racks and the S/C should be tied together at a common point with braid or wire, #2 or larger, tying each rack to a common point, probably at the communications test position.

3.5.9.1.2 All shielded leads should have insulated shielding.

3.5.9.1.3 All shielding of test equipment leads from any one of the S/C subsystems should be common at the S/C end only, and connected to the S/C structure if this function's return is nominally at ground potential. If the function's return is nominally above ground potential, the shielding should be terminated to a point at this potential

3.5.9.1.4 Extra care must be exercised when using co-axial connector shells to prevent potential ground loops developing.

3.5.9.1.5 Shielding must not be grounded by connection to a junction box, to a chassis, or to the frame of test equipment.

3.5.9.1.6 A shield potential lead should be carried through all cables, carrying through the junction boxes so that shielding will not be lost at this point. All cabling shall be grounded by connecting its shield to this common equipotential lead at the cable end closest to the spacecraft.

3.5.9.1.7 Diodes or capacitors should be placed across all test equipment switches where applicable to reduce RF interference and cross-feed problems.

3.5.9.1.8 Test equipment instrumentation, and launch equipment shall not tie their chassis to the S/C power or signal returns.

3.5.9.1.9 In order to prevent the generations of ground loops and system interference it may be required to accept some degradation in S/C ground instrumentation.

3.6 Documentation

Complete documentation required is as follows:

3.6.1 Drawings

All drawings shall be completely detailed so that duplication of fabricated assemblies, and installation of test equipment can be accomplished.

3.6.2 Other Documents

Complete operating instructions, schematics, wiring diagrams, maintenance, and trouble shooting procedures, and spare parts lists are desirable.

3.6.3 Minimum Requirements

A minimum documentation package for test equipment shall include complete drawings, a functional description, and schematics. This package is mandatory for all test equipment.

4.0 QUALITY ASSURANCE PROVISIONS

4.1 The completed test equipment assemblies shall be capable of surviving those portions of JPL Test Equipment Environmental Spec 30505 as deemed necessary by the cognisant quality control group at JPL.

4.2 Quality Control

The JPL cognisant engineer shall be responsible for in-process inspection of the equipment in fabrication, and shall specify the type approval and type acceptance testing to be completed prior to delivery.

4.2.1 All test equipment shall be completely checked out at JPL prior to delivery to the Spacecraft Assembly and Test Facility where combined testing of all systems test equipment will be performed.

4.2.2 All systems test equipment shall be first used in the JPL Spacecraft Assembly and Test Facility. All test equipment utilized in the environmental test area or at the Spacecraft Checkout Facility (Test Complex) at AMR shall have first proved its worthiness in systems test operations during the JPL System Test Operations in the assembly and test building.

5.0 NOTES

5.1 Preservation and packaging

It is noted that system test equipment may have to endure indefinite periods of idleness between test procedures. During these intervals it is desired that each piece of test equipment, rack-mounted or otherwise, be provided with a close fitting cover of plastic or other suitable material, for protection from dust and from contamination from other foreign material which might affect its subsequent operation.

(Insert in Spacecraft Design Specification Book)

APPROVED:

System: M. R. Mesnard

Subsystem Edwin F. Dobies

JET PROPULSION LABORATORY

Spec. No. RA345-4-210 A

31 January 1962

REVISED & REWRITTEN

SUPERSEDES:
RA345-4-210
13 September 1960

FUNCTIONAL SPECIFICATION
RANGER A3, A4, & A5 SPACECRAFT
TELEVISION SUBSYSTEM

1.0 SCOPE

1.1 This functional specification describes the spacecraft Television Subsystem used for Lunar impact photography aboard the Ranger A3, A4, and A5 spacecraft during the missions P-34, P-35, and P-36.

2.0 APPLICABLE DOCUMENTS

2.1 The following documents form a part of this specification:

SPECIFICATIONS

Jet Propulsion Laboratory

	Spacecraft Design Specification Book, Ranger A3, A4, and A5
30201	Environmental Specification, Ranger RA-1 through RA-5 Flight Equipment, Assembly Level, Type Approval and Unit Acceptance Test Requirements

2.2 Other Publications

Jet Propulsion Laboratory

TM 33-13 (Latest Issue)	Design Study Requirements for Lunar Soft Landing Spacecraft

3.0 REQUIREMENTS

3.1 General

3.1.1 The Lunar Impact Television Subsystem shall consist of a Vidicon Camera-Optical Telescope Assembly suitable for use in the RA-3, RA-4, and RA-5 spacecraft, as defined by this specification and the documents listed in paragraph 2.0.

3.1.2 The Vidicon Camera (see figure 1) shall accept an optical image of the Lunar surface focused on the Vidicon by the optical telescope and perform the operations of:

a. Mechanically shuttering the moving image to form a latent image on the Vidicon target.

b. Electrically scanning the target and presenting the video time sequence to telemetry terminals.

c. Accelerating erasure of the residual latent image to permit re-exposure and repetition of the sequence.

3.2 Electrical Power

3.2.1 Electrical power into the Vidicon transformer-rectifier will be available as a square wave at 2.4 kc/s ± 0.02 percent at a potential of 26 volts rms ± 1.5 percent and power level of 5 watts.

3.3 Optical Input

3.3.1 Telescope Optics

The telescope shall be a conventional Cassegrain configuration astronomical type employing a primary concave parabolic mirror and a centrally located convex hyperbolic mirror with the final focal surface 0.50 inch in front of the primary mirror vertex. The primary mirror shall have an aperture of 7 inches and a focal length of 15 inches. The equivalent focal length of the telescope shall be 40 inches ± 1 inch, with an equivalent light grasp of T/6.3. An optical resolving power of 5 seconds of arc or 40 optical line pairs per mm will be provided on axis and not less than 20 optical line pairs per mm at 0.3° off axis. Proper internal shielding shall be provided to prevent scattered and direct light from lunar areas outside the 0.6° field of view from impinging on the Vidicon surface.

3.3.2 Mounting Materials and Structure

The telescope mirrors shall be constructed of optical fused quartz. The tubular structure separating the primary and secondary mirrors shall be constructed of Invar and fused quartz, or equivalent, and shall be of proper design to minimize flexure and misalignment of the elements by temperature extremes in space and by take-off vibration and shock. Any permanent misalignment experienced shall not be sufficient to deteriorate the optical performance below that specified in 3.3.1 herein.

3.3.3 Mechanical Shutter

The shutter to expose the Vidicon surface shall be a mechanical rotating sector type operating on inertial principles with solenoid actuation by a signal from the Vidicon power supply. Consistent with the optical input, the shutter exposure time shall be adjusted to insure that motion of the image on the Vidicon target shall not exceed one part in 200 of the square frame dimension during the period when the shutter is open. Further, the shutter time shall be adjusted so that the integrated light-level lies within the accepted Vidicon sensitivities of 0.01 to 0.20 foot-candle-seconds. In addition, with the telescope optics specified,this adjustment shall be consistent with proper recording of the luminance range anticipated on the lunar surface. (Approximately 100 - 2000 foot-lamberts.) The resultant shutter exposure time required shall be a nominal 0.02 seconds to cover an exposure level of 0.01 - 0.20 foot-candle-seconds.

3.4 Performance Characteristics

3.4.1 Scan Lines

The Vidicon target shall be electrically swept with a properly collimated and focused electron beam. This beam shall scan an area of square aspect ratio with two simultaneous coherent sawtooth scans analogous to standard commercial practice. Thus, a single frame shall be scanned with two hundred (200) non-interlaced lines.

3.4.2 Scan Procedure

A single frame shall be scanned once for every optical shuttering. The time required for this scan shall be ten (10) seconds.

3.4.3 Erase Procedure

The erase procedure shall be such that after completion of frame scan and upon closure of the erase switch in the Central Computer (CC&S), an erase mode is initiated wherein the target is repeatedly rescanned in the vertical direction at an accelerated rate, the beam current within the Vidicon is increased, and visual light stimulus is applied externally to the Vidicon target. This erase procedure shall require

three (3) seconds. Upon conclusion of the erase procedure, the scan procedure shall be reinitiated. During the erase procedure, the output to the telemetry terminals shall be open-circuited.

3.4.4 Synchronization of Scan Lines

A switch closure in the CC&S will provide a 400-cycle supply for the purpose of line synchronization. Although the precise duration of a scan line is immaterial, it is desirable that each line be of equal duration and each duration will be equal to or less than 1/20th of a second in over-all duration. Furthermore, the technique of frame and line synchronization should not allow a degraded signal-to-noise ratio to disable accurate synchronization. To satisfy this condition, the 400 cycles shall be used to trigger line and frame sweep following proper CC&S switch activation. In the presence of extreme communications noise, ground monitors may use either the narrow-band 400 cycles telemetered from the spacecraft or a hard ground synchronization provided by a 400-cycle signal generator.

3.4.5 Signal Output

Two output terminals, denoted as "Signal Output", shall be made available to telemetry. The character of the signal available at these terminals shall be as outlined below.

3.4.5.1 The signal source can be represented as a Thevenin Generator with a source resistance of 10,000 ohms and an open circuit signal variation of two (2) volts peak-to-peak.

3.4.5.2 The signal source shall possess frequency components extending uniformly from DC (zero frequency) to 2,000 cycles per second. Information above 2,000 cycles per second shall be attenuated at a rate not to exceed six (6) db per octave.

3.5 Pulse Sequencing

3.5.1 Power Application

At the initiation of terminal maneuver, application of primary power to the Vidicon system will be initiated by the Command Subsystem. This will be accomplished by the closure of a single latching switch. Power, once connected, will not be withdrawn for the remainder of the flight.

3.5.2 Switching Functions Sequence

At completion of second pitch in the terminal maneuver, the CC&S will initiate the sequence of switching functions denoted as Scan, Erase, Clock Timing, and Telemetry Connect. Each of these functions is delineated below, and illustrated in Figure 2. The Scan (10 seconds' duration) and Erase (3 seconds' duration) functions will be repeated every 13 seconds.

3.5.2.1 Scan Pulses

In order that proper synchronization of frame scan be accomplished, the CC&S will initiate a switch closure function to be denoted as Start of Scan. This sequence will consist of a single closure of no less than 1/2 millisecond or more than 1.0 second duration with a repetition rate of one pulse (one switch closure) every 13 seconds.

3.5.2.2 Erase Pulses

A second switch closure function, of identical characteristics to that described in paragraph 3.5.2.1 but delayed for 10 seconds, will be initiated to time the Vidicon erase functions.

3.5.2.3 Clock Timing Pulses

Clock timing pulses will be provided by the CC&S in the form of a 400 cycle per second rate.

3.5.2.4 Telemetry Connect

The Vidicon signal output shall be switched into telemetry for the 10 seconds existing between the initiation of the Scan Pulses and the initiation of the Erase Pulses. During the remainder of the 13-second period, the Vidicon signal output shall be open circuited.

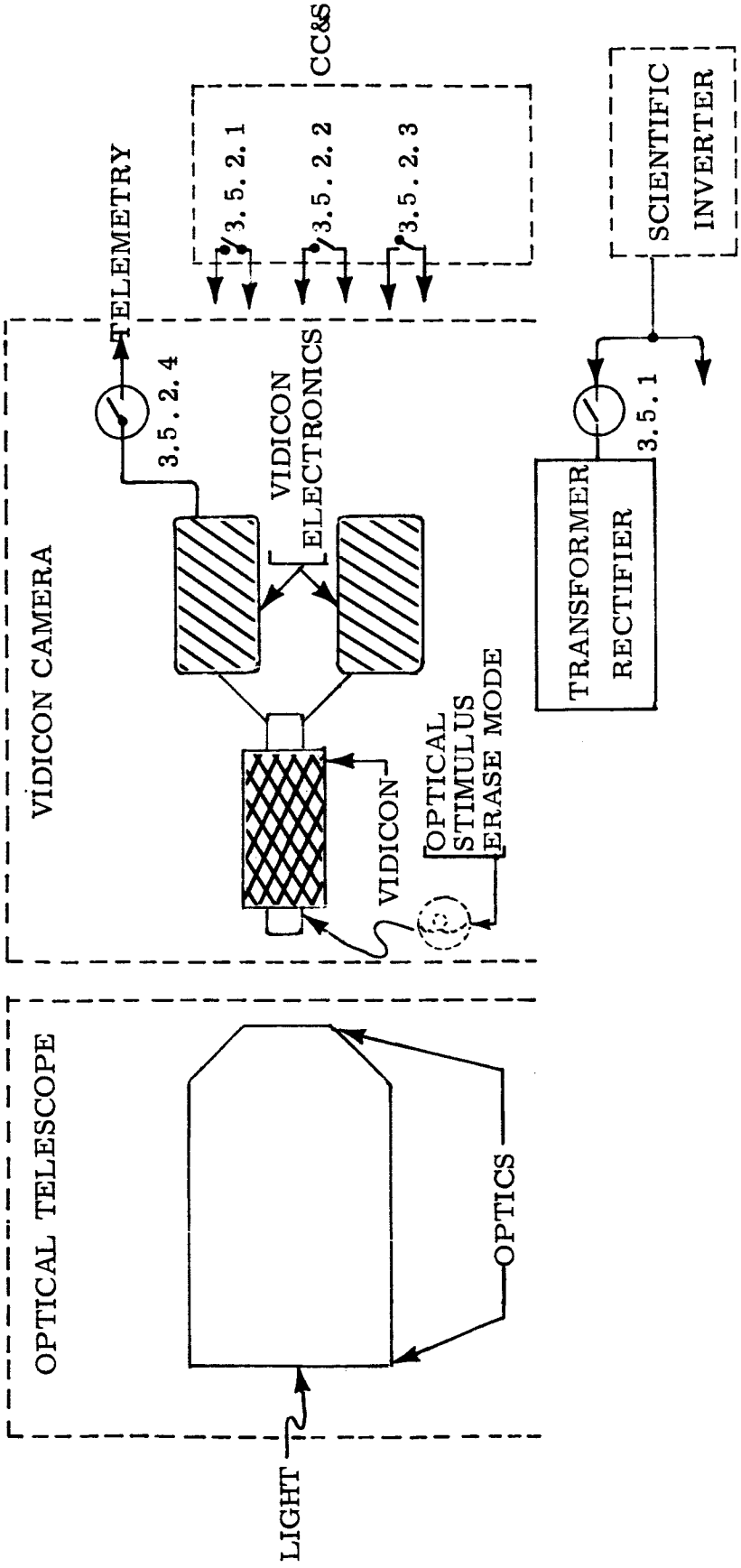

NOTE: Numbers (i.e. 3.5.2.1) indicate approximate paragraphs within this specification.

Figure 1. Television Subsystem

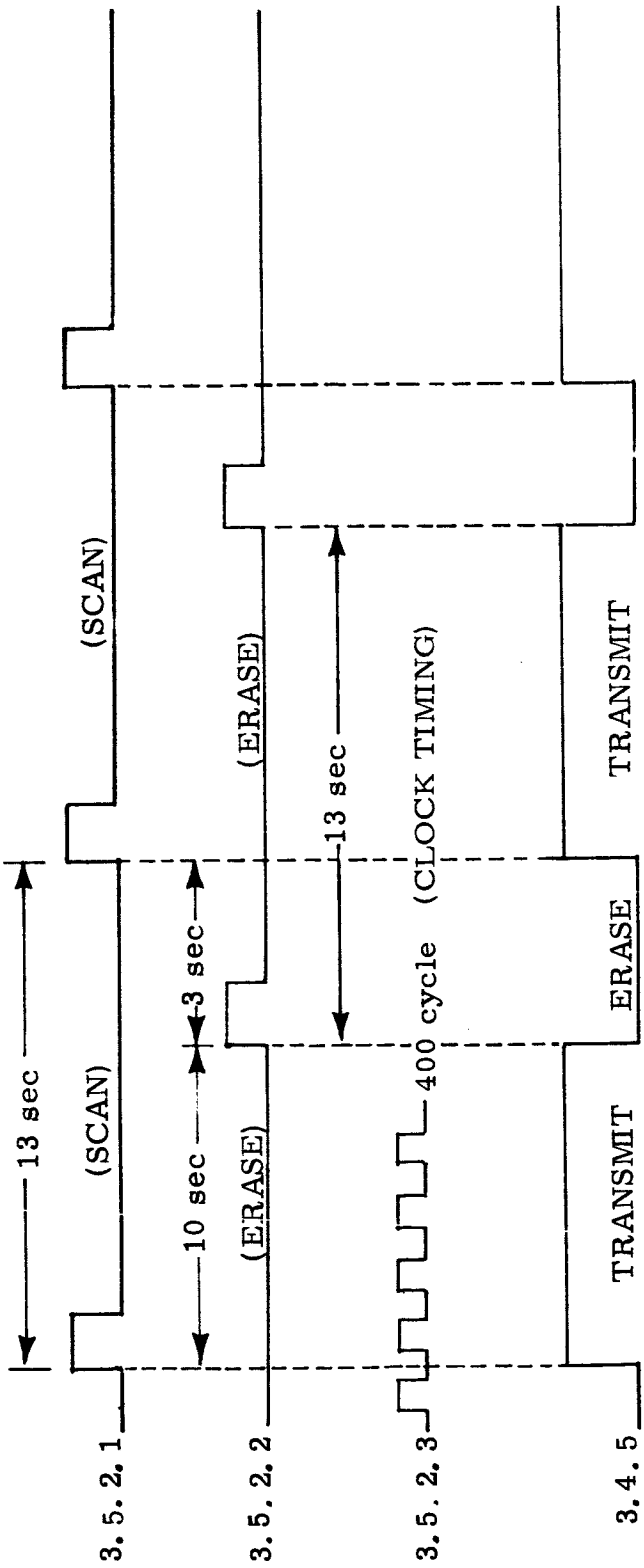

Figure 2. Switching Functions Sequence

(Insert in Spacecraft Design Specification Book)

APPROVED:

System: M. R. Nesnard / SK.

Subsystem: A. Metzger

JET PROPULSION LABORATORY

REVISED AND REWRITTEN

Spec. No. RA345-4-220A
10 May 1962

SUPERSEDES:
Spec. No. RA345-4-220
26 September 1960

FUNCTIONAL SPECIFICATION
RANGER A3, A4, and A5 SPACECRAFT
FLIGHT EQUIPMENT
GAMMA-RAY SPECTROMETER

1.0 SCOPE

1.1 This specification covers the Ranger A5 spacecraft Gamma-Ray Spectrometer.

2.0 APPLICABLE DOCUMENTS

2.1 The following documents apply to this specification:

SPECIFICATIONS

Jet Propulsion Laboratory

	Spacecraft Design Specification Book, Ranger A3, A4, and A5
30201	Spacecraft Environmental Specification, Flight Equipment, Ranger A1 through A5
30339	Spacecraft Design Specification, Gamma-Ray, Spectrometer Power Supply, Flight Equipment, Ranger A3, A4, and A5

3.0 REQUIREMENTS

3.1 Components

The gamma-ray spectrometer will be in three parts: the detector and the high-voltage supply, which are to be placed on the end of a telescopic boom (figure 1), and the pulse-height analyzer, which will be located on five modules in the hex (figure 2).

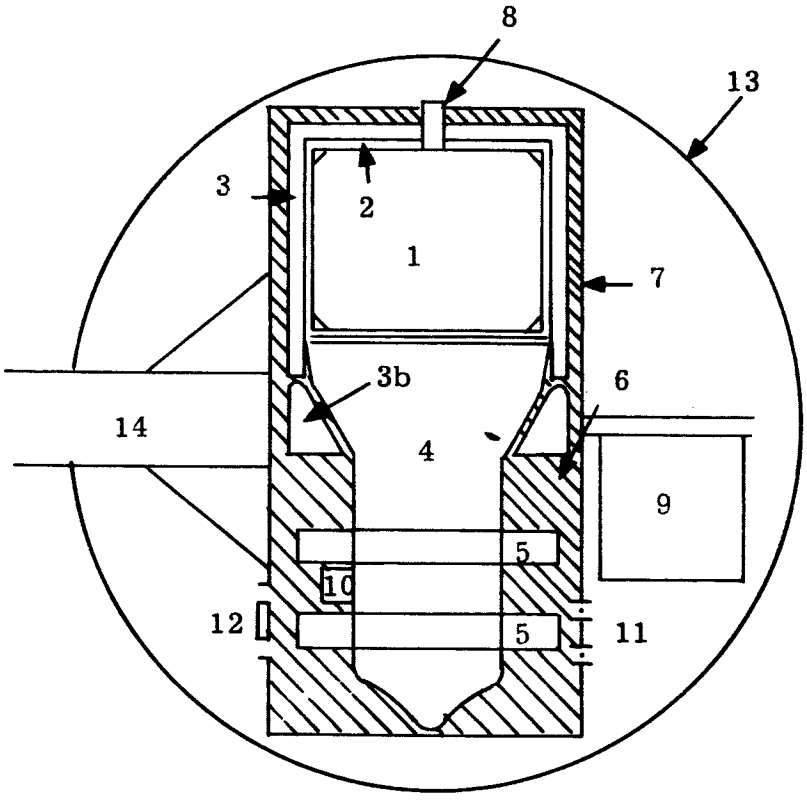

Figure 1.

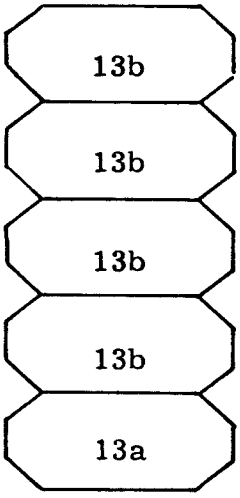

Figure 2.

3.1.1 The boom assembly consists of the following items (as numbered in figure 1):

1) A right circular cylindrical scintillator crystal of thallium activated cesium iodide measuring 2-3/4 inches in diameter by 2-3/4 inches in length with beveled corners.

2) A plastic scintillator composed of polyvinyl toluene with an added quantity of dipenylstilbene. This scintillator encloses the cesium iodide crystal with a thickness of 1/8 inch on all sides.

3) a. A teflon light reflector jacket, 1/4 inch thick, that is held in place by a yoke (3b).

b. A magnesium alloy yoke which is clamped below the bulb of the phototube.

4) A 3-inch phototube, CBS type CL1029.

5) Anti-coincidence circuitry, mounted on two discs, which will receive a signal from the phototube and in turn feed another signal to the pulse height analyzer.

6) Stayfoam 112.

7) An aluminum jacket, 9.87 inches in length and 4.125 inches in diameter, completely enclosing the crystal-tube-anticoincidence unit. A 5.25-inch-diameter flange machined as an integral part of the can serves to bolt the unit to the frame at the end of the boom.

8) A weak source of low-energy gamma rays which will be placed in a tiny container and threaded into the jacket.

9) The high-voltage supply (1800 VDC) for the photomultiplier tube which will occupy about 10 cubic inches.

10) A temperature transducer which will be placed inside the cylinder.

11) Two glass-metal feed-through connectors will be used to carry the high voltage.

12) A multiple (15) pin connector will handle the low-voltage power and signal connections.

13) A thin sphere of metal surrounding the entire detector package, painted so as to provide for optimum temperature control. Both the cesium iodide crystal and the phototube are temperature dependent.

14) Extension of the boom arm with additional bracing will provide supporting structure for the detector components.

The detector cylinder comprises items 1-8 and 10-12. Not shown in the drawing are two layers of 4-mil/conetic which will be mounted in the can to provide magnetic shielding. The weight of the entire detector will be as specified in JPL Specification RA345-4-120. It has no separate power requirements as the phototube operates off the high-voltage supply, while the anti-coincidence circuitry will draw power from the pulse-height analyzer. The high-voltage supply will weigh no more than 0.4 pound and consume less than 0.4 watt.

3.1.2 The power supply for the pulse-height analyzer, which operates off the 2.4 kc scientific converter, will be mounted on a separate

module (13a in figure 2). The analyzer proper, consisting of amplifier, analog-to-digital converter and memory storage as well as a blocking gate for the anti-coincidence circuitry, will occupy the other four modules of figure 2. The over-all weight of the analyzer, including mounting, will be 5.0 pounds. Its power consumption will be no more than 1.5 watts for operation from 0 to 45°C. Above this temperature, power consumption begins to rise.

3.2 Operation

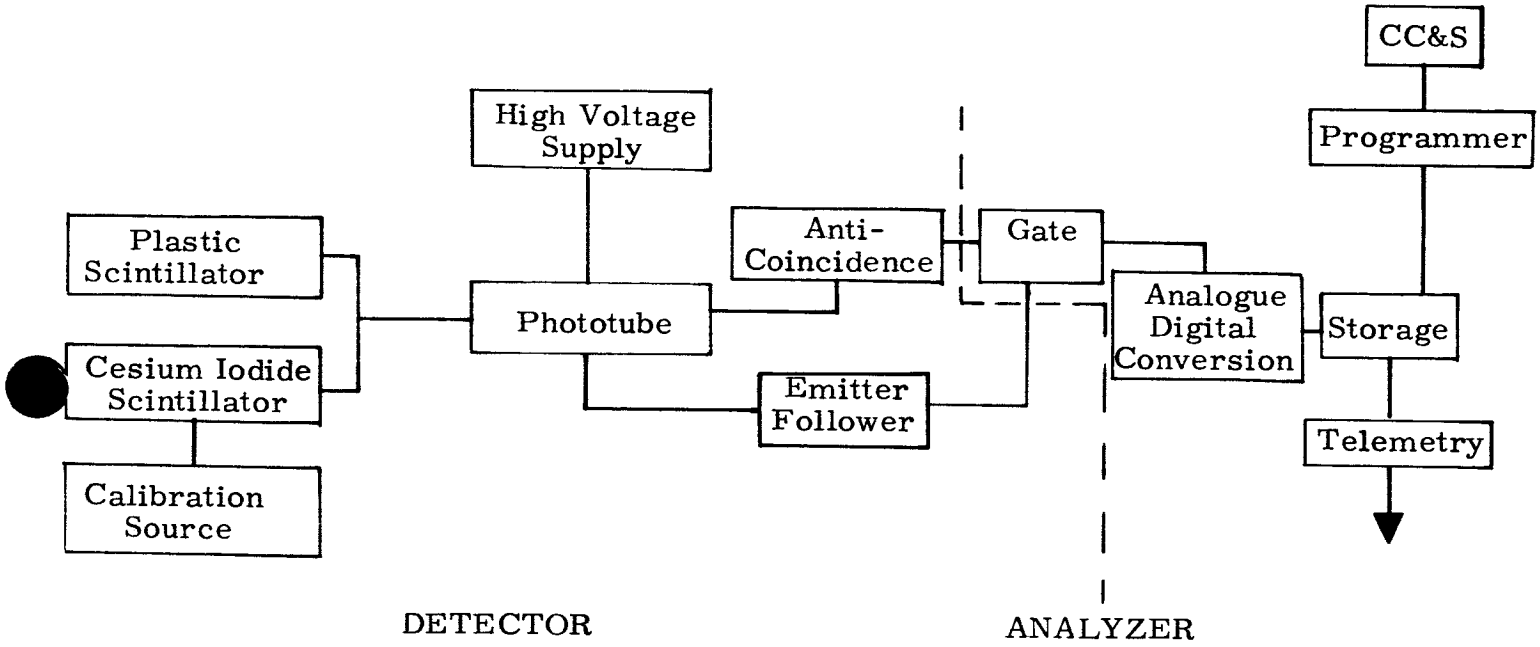

Figure 3.

Gamma rays and charged particles entering the cesium iodide scintillator will be transformed into light which reaches the cathode of the photomultiplier tube either directly or by reflection from the teflon jacket. The electrical impulse produced (0.01 to several volts, depending on the type and energy of the incident radiation) is taken from the eighth dynode of the photomultiplier tube and passed down the boom to the analyzer with a decay time of approximately 12 microseconds. The plastic scintillator has the ability to discriminate between gamma rays and charged particles by not responding significantly to the former. A charged particle will produce a fast light flash in the plastic. The corresponding pulse in the

phototube is taken off the anode and passed to a fast clipping circuit which drives the univibrator. The latter generates a blocking pulse about 4 volts in amplitude, with a rise time of 100 millimicroseconds and a width of 2 to 3 microseconds, which closes a gate at the analyzer. The gate is kept closed for a sufficient length of time to prevent the slower cesium iodide pulse from the eighth dynode from passing into the analyzer.

The pulse-height analyzer will have 32 channels of energy sorting. Its response will be improved by using two levels of gain, 0 to 3 Mev and 0 to 0.6 Mev. The lunar surface will be scanned with the former while the latter will be used to look for the 0.51 Mev annihilation gamma-ray line in cislunar space, as well as to calibrate the spectrometer with the low-energy gamma emitter. In addition to closing a relay in order to produce a change of gain, the Central Computer and Sequencer (CC&S) will also provide pulses to the analyzer for: a) commanding the read-out mode, b) producing a change in state to identify the start of read-out, and c) reading out the 512-bit memory. These pulses, when fed into the 330 micromicrofarads, 500-ohm impedance of the analyzer, must have a rise time no greater than 1 microsecond. The analyzer will produce output signals for telemetry.

3.3 Sequence

Approximately 4 hours after lift-off the spectrometer will be turned on and follow a specific pattern until the terminal mode. The two gains will alternate for constant periods of 8 minutes with read-out at the rate of 25 pulses-per-second. Two and a half hours after the midcourse maneuver, the boom will be extended, thereby reducing the background due to scattering effects from the spacecraft.

Upon transfer to the terminal mode, read-out will occur every 52 seconds at the rate of 200 pulses-per-second. The CC&S will be programmed to provide 6 or 7 periods of high-gain calibration read-out immediately after initiation of the terminal mode. Then the low-gain (0 to 3 Mev) will be switched on and held for the remainder of the flight.