24

TID-15987

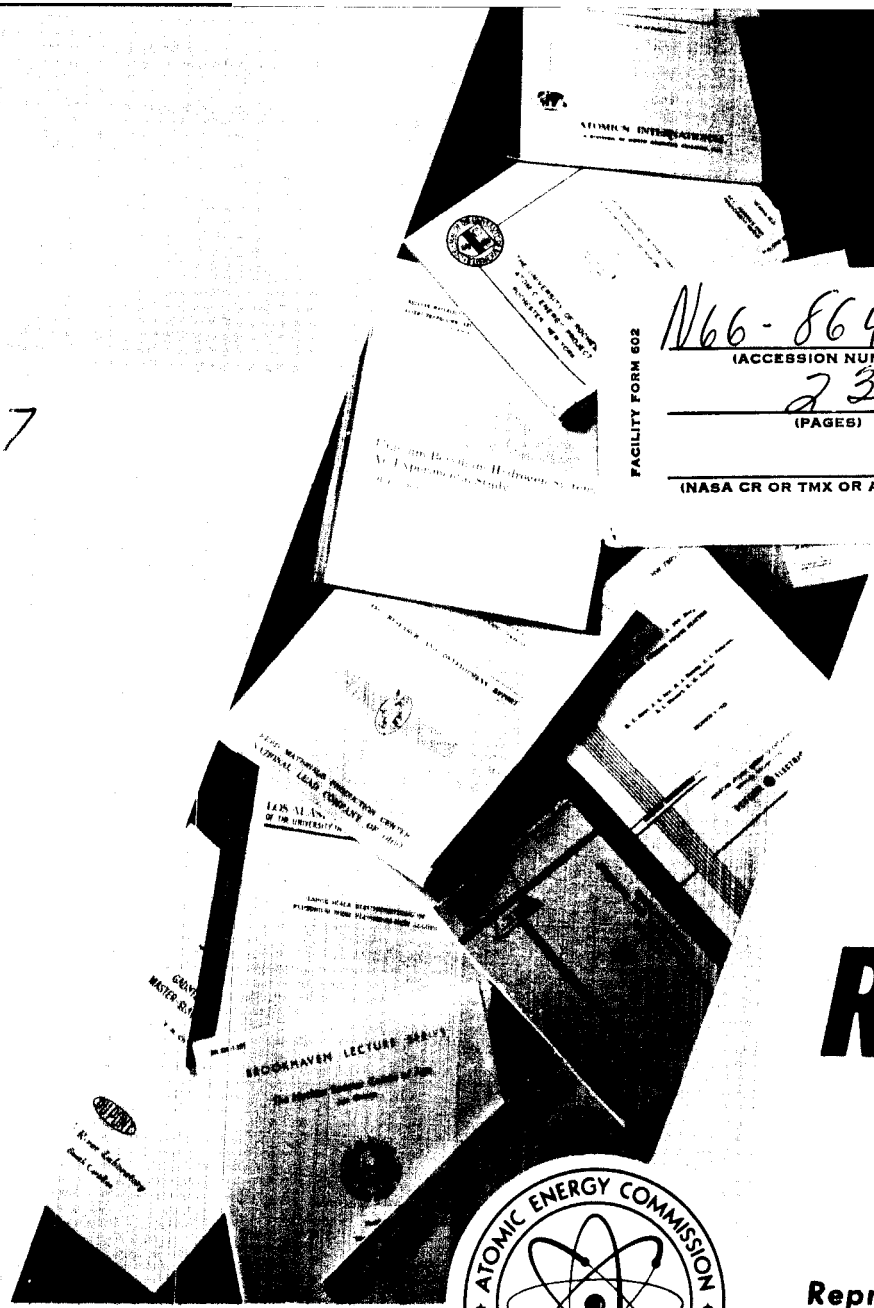

FACILITY FORM 602

N66-86417 (ACCESSION NUMBER)	(THRU)
23 (PAGES)	None (CODE)
(NASA CR OR TMX OR AD NUMBER)	(CATEGORY)

A Facsimile Report

Reproduced by
UNITED STATES
ATOMIC ENERGY COMMISSION
Division of Technical Information
P.O. Box 62 Oak Ridge, Tennessee 37831

4/01/97

UNCLASSIFIED

TID

15987

1 OF 2

LEGAL NOTICE

This report was prepared as an account of Government sponsored work. Neither the United States, nor the Commission, nor any person acting on behalf of the Commission:

A. Makes any warranty or representation, expressed or implied, with respect to the accuracy, completeness, or usefulness of the information contained in this report, or that the use of any information, apparatus, method, or process disclosed in this report may not infringe privately owned rights; or

B. Assumes any liabilities with respect to the use of, or for damages resulting from the use of any information, apparatus, method, or process disclosed in this report.

As used in the above, "person acting on behalf of the Commission" includes any employee or contractor of the Commission, or employee of such contractor, to the extent that such employee or contractor of the Commission, or employee of such contractor prepares, disseminates, or provides access to, any information pursuant to his employment or contract with the Commission, or his employment with such contractor.

DTIE
MICROCARD
ISSUANCE
DATE
9/7
1962

ME-5-62-2

THE VISCO SEAL - A SURVEY

William K. Stair

The University of Tennessee
Engineering Experiment Station

Department of Mechanical Engineering

Investigation carried out under
Subcontract Number 2118
Union Carbide Nuclear Company

March 1962
Knoxville, Tennessee

PREFACE

This report is the second of a series resulting from the survey and review of technical literature dealing with the problems of dynamic sealing. The investigation is being supported by the Union Carbide Nuclear Company and is directed toward the theoretical and experimental analysis of devices suitable for use as dynamic seals for gases.

The visco seal is the name given the viscosity pump when used as a sealing device. This type of seal has not been widely studied in the United States and has been used in a very limited way. However, a significant number of reports have been found in foreign literature. This report presents some of the advantages and disadvantages of this type of seal as it is envisioned as being applied to a gas-cooled reactor.

Dynamic seals being studied in this investigation, in addition to the visco-seal, include the labyrinth seal, the mechanical face seal, the bearing-seal, the buffered bushing seal, and the common shaft packing.

TABLE OF CONTENTS

	Page
Introduction	1
Survey of Literature	1
Design Example	18
Summary	24
Conclusion	27
Nomenclature	28
Bibliography	30
Figures	32

INTRODUCTION

The visco seal, the viscosity pump, the threaded seal, the spiral groove seal or bearing are various names given the device whose working principle is based on the pressure generation in a viscous fluid, enclosed in a narrow annulus or slit, by means of grooves on a rotating shaft or plate. The appellation, visco seal, was probably coined by Lawaczek [4] [1] who as early as 1916 applied hydrodynamic seals based on this principle to rotating pumps.

SURVEY OF LITERATURE

Rowell and Finlayson [1] [2] presented an analysis of a screw viscosity pump after having seen a model exhibited by Sir John Dewrance in 1920 which was capable of producing and maintaining pressures of 1000 psi and up. Figure 1 presents a schematic view of the essential elements of a visco seal or visco pump. In the first paper by Rowell and Finlayson an equation was developed for the flow rate from a viscosity pump as a function of thread or groove dimensions, length of the grooves, relative surface velocity, and fluid viscosity. The analysis presented is based on a number of simplifying assumptions, and the equation, which is incorrectly written in reference [1] but correctly shown in [2], is

$$V = 2b^2 \left[\frac{4U}{\pi^3} \sum_{n=1}^{n=\infty} \frac{\sinh n\pi h/b}{n^3(\cosh n\pi h/b+1)} - \frac{bhp}{24\mu L} + \frac{8b^2p}{\pi^5 \mu L} \sum_{n=1}^{n=\infty} \frac{\sinh n\pi h/b}{n^5(\cosh n\pi h/b+1)} \right]. \quad (1)$$

[1] Numbers in brackets designate references at the end of the report.

Equation (1) is of the form $V = b^2 \left(AU - B \frac{b^2 p}{\mu L}\right)$, (2)

where $A = \frac{8}{\pi^3} \sum_{n=1}^{\infty} \frac{\tanh n\pi h/2b}{n^3}$, and $B = \frac{h}{12b} - \frac{16}{\pi^5} \sum_{n=1}^{\infty} \frac{\tanh \frac{n\pi h}{2b}}{n^5}$.

A and B are functions of the ratio h/b and values of these functions are given in Table 1. For a given rotor and speed, the pressure is greatest when the flow is zero. In the above treatment Rowell and Finlayson did not consider the clearance directly in computing the flow and developed pressure. Instead, equation (1) refers to the theoretical flow from a pump having zero clearance and the leakage through the clearance area, for the cases in which the spindle is concentric with the surrounding sleeve, is given by

$$V_{1c} = \pi D c^3 p / 12 \mu l. \quad (3)$$

If the spindle and sleeve are in a completely eccentric position, the leakage flow would be 2.5 times the value computed by equation (3). Thus, the commonly used expression,

$$V_{1\varepsilon} = V_{1c} \left(1 + 1.5\varepsilon^2 \right), \quad (4)$$

may be used to compute the flow under partial eccentric conditions. The loss in flow may be accounted for by evaluating V_{1c} from equation (3) for a given pressure, and then increasing the velocity in equation (1) to give a calculated flow which is in excess of the desired value by an amount equal to the leakage determined by equation (3).

Letting $K = p/\mu L$, using "a" to represent the groove area, and employing the values of A and B given in Table 1, the values of V and the

Table 1

Values of functions A and B in equation (2). (According to Rowell and Finlayson

h/b	log h/b	A	B	A/B	log A/B
0.012732	$\bar{2}.1048$	0.006362	$1.7178 \times 10^{-}$	37030.0	4.5686
0.016	$\bar{2}.2041$	0.007999	$3.4123 \times 10^{-}$	23440.0	4.3699
0.019098	$\bar{2}.2810$	0.009543	5.799×10^{-7}	16450.0	4.2162
0.030338	$\bar{2}.4820$	0.01491	2.2876×10^{-6}	6519.0	3.8142
0.125	$\bar{1}.0969$	0.05772	1.502×10^{-4}	384.2	2.5846
[illegible] 2064	$\bar{1}.3435$	0.09545	7.7066×10^{-4}	123.9	2.0929
0.34970	$\bar{1}.5437$	0.13812	2.7782×10^{-3}	49.72	1.6965
0.50	$\bar{1}.6990$	0.1800	7.100×10^{-3}	25.36	1.4042
0.51230	$\bar{1}.7096$	0.18295	7.6024×10^{-3}	24.06	1.3813
0.73294	$\bar{1}.8650$	0.22627	1.8064×10^{-2}	12.53	1.0980
1.0	0.0	0.2482	3.516×10^{-2}	7.062	0.8489
1.4659	0.1662	——	7.069×10^{-2}	——	——
2.1988	0.3421	——	1.3135×10^{-1}	——	——
>3	——	0.27137727	$\frac{h}{12b}-0.05252075$	$3.32565 \frac{b}{h}$	$0.5218-\log \frac{h}{b}$

maximum pressure, p_m, may be calculated for various grooves of interest. Recall that V refers to the theoretical flow and does not account for the leakage through the clearance area, and p_m is the maximum pressure when the flow is zero. The result of this calculation is tabulated in Table 2. It may be seen that both the ideal flow rate and the maximum pressure developed increase as the ratio b/h increases. If the value of b/h is allowed to increase without limit, i. e. an infinite flat plate system having a plate separation of "h", the values of V and p_m become respectively,

$$V = a\,(0.5000\,U - h^2K/12), \text{ and } p_m = 6\,U\mu L/h^2.$$

Table 2

Values of volume flow and maximum pressure for various grooves according to Rowell and Finlayson.

Type of groove		V	p_m
Square	b/h = 1	V = a(0.2482 U - 0.03516 Ka)	p_m = 7.06 UμL/a
Rectangular	b/h = 2	V = a(0.3600 U - 0.028 Ka)	p_m = 12.86 UμL/a
Rectangular	b/h = 8	V = a(0.4618 U - 0.009613 Ka)	p_m = 48.0 UμL/a
Rectangular	b/h = 62.5	V = a(0.4999 U - 0.001333 Ka)	p_m = 375 UμL/a
Semi-circular	b/h = 2	V = a(0.405 U - 0.03455 Ka)	p_m = 11.72 UμL/a

The authors indicate that the efficiency of the viscosity pump can not be calculated but the upper limit of efficiency can be determined, and this limit is indicated to be 33 1/3%. Leyer [14] similarly deduces this value for the maximum efficiency of the viscosity pump. Rowell and Finlayson proceed with experimental results and simplified methods of evaluating the

functions A and B. It was observed that for values of b/h greater than 2, the calculated and experimental results were in good agreement. The above discussion relates to ideal pump screws which have been considered as having zero helix angles. This treatment was considered by Rowell and Finlayson to be satisfactory for the practical cases. General formulae are presented, however, for those cases when the helix angle is not negligible. Later workers have invariably considered the helix angle of the screw. Rowell and Finlayson noted the possible extension of the screw viscosity pump to such applications as seals and bearings.

> Perhaps the most immediately interesting application, however, lies in the fields that have been cultivated for many years, viz., oil grooves and bearing seals. With the information here given it is possible to design bearing seals with less expense and greater effect..... [2] .

While the problem of energy dissipation due to viscous friction was not discussed by Rowell and Finlayson, the use of a cooling jacket was considered to be an essential and necessary part of the pump for maximum pressure development.

The use of the screw viscosity pump as a seal for a bearing is shown in Figure 2. An arrangement similar to this was the basis of a patent awarded to Grobel [6] in 1943. Use was also made of the visco seal principle in a patent awarded to Browne [5] in 1941. In Figure 2 the sealant fluid is supplied to chamber 1 and flows through the clearance space to drain chambers 2 and 3. The spiral grooves 4 and 5 are given a pitch and dimensions which pump toward the supply chamber at 1 and thus minimizing the flow of the sealant. This design, which was evolved in connection with hydrogen cooling of generators, is operative for one direction of shaft rotation only. It appears that this limitation would apply to all seals making use of the

visco pump principle.

Whipple [8] [10], Woodrow [9], Wordsworth [12], and Snell [13] made use of the principle of the viscosity pump in developing a theory and practice of thrust bearings pressurized by the viscous pumping action of grooves. This work, while being related primarily to compressible flow, is also applicable to incompressible flow. In the above referenced thrust bearing work the grooves, either in a spiral or herring-bone pattern, were etched or machined on one of a pair of parallel thrust plates, and the load capacity of the thrust pair was found to depend upon the relative surface speed, the fluid viscosity, the plate clearance, and the geometry of the grooves. The load capacity was provided by the fluid pressure generated between the plates. The pressure developed was evaluated by Whipple [8] to be

$$p = K_1 (\mu UL/ c^2). \qquad (5)$$

K_1 is a coefficient which depends upon the geometry of the grooves. Whipple presents the conditions required to maximize K_1 as:

$t = 0.24470, \quad v = 3.61, \quad$ and $u = 0.5$

where t = tangent to pitch of the grooves (5a)

v = clearance + groove depth / clearance (5b)

u = root width / root width + crest width (5c)

With the form factors, t, u, and v taking the above specified values, the maximum pressure is evaluated by equation (5) as

$$p_m = 0.547 \mu UL/ c^2$$

Asanuma [11] presented a theoretical study of the viscosity screw pump when used for the purpose of providing a seal at the shaft penetration in vacuum and pressure vessels. The subject was approached in a manner somewhat

similar to that of Rowell and Finlayson, except that Asanuma considered the seal leakage directly in the development, and the assumptions used in the development were not as restrictive as those of Rowell and Finlayson. The equation developed for laminar flow indicates that the sealing head or pressure is directly proportional to the surface velocity of the rotor, the length of the threaded section of the screw pump, the viscosity of the sealing fluid, a factor which depends upon the screw thread geometry, and inversely proportional to the square of the clearance between the rotor and sleeve, or

$$p_m = S (6\mu UL/g_c c^2). \qquad (6)$$

The analysis presented by Asanuma applies to square or rectangular threads. Asanuma shows that the theoretical pump performance under laminar conditions could be maximized by selecting the screw pump groove dimensions as follows:

a. The width of the thread should be as narrow as possible.

b. The ratio of groove width to depth should be 5 to 10.

c. The ratio of clearance to groove depth should be 0.1 to 0.2.

d. The helical angle of the screw thread should be 10 to 20 degrees.

Recently some very significant work has been published by E. F. Boon of the Institute of Technology, Delft, Netherlands and various co-workers. In 1955 Boon with Honingh and van Rijssen [16] presented a general discussion on dynamic shaft seals. This survey article, which presents very little theory, discusses the packing box, the mechanical seal, the related problems of heat transfer and diffusion, and briefly discusses the viscosity screw pump when used as a seal. The possibility of using the viscosity pump principle as a seal had been suggested by Rowell and Finlayson and Whipple, but Asanuma and Boon were perhaps the first to consider the problem, both

analytically and experimentally, of applying the principle to the visco seal. It appears that the work of Asanuma and Boon may have been done somewhat simultaneously and independently. Two quotations from the 1955 paper of Boon and others may be of interest to those studying dynamic seals: The first is with respect to the problem of developing a theoretical background for seal design in which it was noted,

> The problem is, however, far from being solved. This is not only owing to a lack of interest which most researchers have shown towards this subject. Also the perplexing difficulty and complexity did not make the subject attractive to serious research workers who are interested in the physics of the sealing mechanism. Performance tests are fairly easy to make. However, they are usually made in such a rough manner as to yield only the answer: satisfactory or unsatisfactory [16] .

Secondly, the authors state with respect to seal leakage,

> It cannot be stated too positively that all seals leak. The point is that leakage can be reduced to a low value by the following methods: (a) by having the smallest clearance possible....., (b) by filling the gap with a sealing fluid so that only leakage by diffusion is possible, (c) by setting up a reverse leak, ... [16] .

Figure 3 shows the basic seal discussed in reference [16] . The sealing fluid fills the clearance space and grooves for a distance "L", the distance "a" is filled with the system fluid, and the distance "b" is filled with the ambient air. The pressure distribution indicated by curve 1 (solid line) is obtained when the system pressure is equal to the atmospheric pressure. When the system pressure is increased the pressure distribution indicated by curve 2 (dashed line) is obtained. Note that the interfaces between the sealing fluid, the system fluid, and atmosphere move axially. The authors relate that pressure gradients in the seal of 20 atm/cm (746 psi/in) were experimentally attained with ease even though the experiments did not fully conform with their theoretical equations. One of the shortcomings

of the seal shown in Figure 3 is the lack of sealing when the shaft is at rest. To overcome this objection the seal shown in Figure 4 was developed. The rotor "A" is driven by the shaft, with an elastomeric seal "E" being used to prevent leakage between the shaft and rotor. Rather than being of a single diameter, the rotor is made larger in diameter on the process or system side (this assumes that the system is pressurized) providing a sealing shoulder at "F" which contacts the stator when the speed, and thus the pressure at "C", is reduced below a certain value. Tests were conducted with oils having viscosities of 70 centistokes and higher. The radial clearances between the stator and rotor were 15 to 20 microns (0.0006" to 0.0008"). At room temperature and at maximum system gas pressure of 20 atmospheres (294 psia) the seal provided complete shut-off against gas leakage when running at 1500 rpm and when stationary. The maximum shaft surface velocity employed was 22.9 fps (45 mm shaft at 2950 rpm). The authors observed:

1. The pressure developed by the visco seal can be increased by:
   a. Increasing the seal length,
   b. Decreasing the clearance between rotor and stator,
   c. Decreasing the depth of the winding grooves,
   d. Increasing the viscosity of the sealing fluid.
2. The loss of sealing fluid was not serious and continuous make-up was unnecessary.
3. The leakage due to diffusion was negligible.

The test results of the seal shown in Figure 3 are reproduced as Figures 5 and 6. These results are from a thesis by van Hoek [15] . It was further commented in reference [16] that the visco seal was not suited for high

temperatures since the sealing action depends upon the viscosity of the sealing fluid. It will be noted in Figure 4 that a cooling jacket is employed and it is anticipated that this element of design will be most important in the applications to gas-cooled reactor systems. It is important to note that the conclusions drawn by Boon et al [16] are in agreement, in the main, with those which may be made on the basis of the earlier work of Rowell and Finlayson [1] , [2] , and those made by Asanuma [11] .

Frössel, in research on seals for high peripheral speeds, presented a study on the visco seal in 1956 [17] . Frössel used the equation from the work of Gümbel and Everling [3] for the maximum sealing pressure attainable which is

$$p_m = C_1 \, (\mu UL / h^2) . \qquad (7)$$

C_1 is an empirical coefficient which is dependent on the ratio $(h/c)^2$, the form of the thread, the size and geometry of the thread, and the helix angle. Frössel reasoned that C_1 would be zero for helix angles of zero and 90° and would reach a maximum at some intermediate angle. The data presented by the author are shown in Table 3.

Table 3

Values of the coefficient C_1 for equation (7). According to Frössel)

	Helix Angle - α							
	0	5	10	12	15	20	25	90
Metric thread with a pitch of 1 mm, a thread height of 0.7 mm and h/c=14	0	14	25	27	24	16	11	0
Metric thread with a pitch of 0.5 mm, a thread height of 0.3 mm and h/c=6	0	3	5	6	7	7	6	0

Frössel observed that the grooves could be on the shaft or on the sleeve and the results would be the same. In an example cited by Frössel, a 10 cm shaft having a 5 cm threaded section and using a spindle oil having a viscosity of 9.8 centipoise at 60°C developed a sealing pressure of 4.2 kg/cm^2 (59.8 psi) when running at 3000 rpm. The h/c ratio was not indicated. Frössel solved the problem of sealing a stationary shaft when using a visco seal by using an elastomeric lip type seal. When the shaft was turning the centrifugal force would cause the lip seal to unseat and become inoperative. The temperatures involved in nuclear applications may make this solution of the static seal problem unacceptable. The conclusions reached by Frössel, which are the result of extensive experimental work but very limited analysis, were, for the most part, similar to those of Rowell and Finlayson, Asanuma, and Boon et al.

Klüpfel [18] makes use of the visco seal principle in the invention of a buffered seal for hydrogen-cooled generators. The inventor makes use of differing clearances and differing helix angles on the two sides of the central supply groove and thereby controls the amount of sealant which flows toward the process side and toward the atmospheric side.

Yager [7] makes use of the visco screw pump to supply oil to the bearings of a high speed machine spindle in a patent granted in 1947.

In 1959 Boon and Tal [22] presented a comprehensive and detailed analysis of the visco seal in one of the most useful studies available on the subject. Describing the laminar flow with the commonly used simplifying assumptions regarding flow and the geometry, the Navier-Stokes equations were solved, resulting in the equation for the pressure developed as

$$p = \mu DL\omega / C_2 \, c^2 \qquad \text{or } p = 2\mu LU / C_2 \, c^2 . \qquad (8)$$

C_2 is a coefficient depending upon the geometry of the grooves, clearance, and the groove helix angle. $C_2 = f(t, u, v)$ where the form parameters are defined by equations (5a), (5b), and (5c). The authors indicated that C_2 was a minimum at a value of 3.6559 when the form parameter values are:

$t = 0.28066$, $v = 3.65333$, and $u = 0.5$.

Thus, the pressure is a maximum and equation (8) becomes

$$p_m = 0.27353\mu\omega DL/c^2 \quad \text{or} \quad p_m = 0.54706\mu UI/c^2. \tag{8a}$$

The maximum pressure as determined above is very similar to that obtained from equation (5). Whipple provided values of the form parameters t, u, and v for only the maximum pressure. Boon and Tal, however, presented values of the form parameters for a number of anticipated design conditions. It is observed, also, that equation (8) is similar to those of Asanuma and Frössel.

When $p = p_o$ = constant, the minimum value of the product (μL) is given by

$$(\mu L)_{min} = 3.6559 \quad p_o c^2/\omega D.$$

This, however, is not necessarily the optimum condition. The authors define the optimum construction as that which gives the minimum power requirement for a given p_o. Usually the values of diameter, speed, and required p_o are known and μ, I, and c may be adjusted in order to make the power requirement as low as possible. The power requirement is given by the expression

$$Q = \left(\frac{C_3}{C_2}\right)\left(\frac{\pi\mu\omega^2 D^3 L}{2c}\right) \quad . \tag{9}$$

C_3 is a coefficient for power dissipation and, similarly to C_2, depends upon t, u, and v. The values of u, t, C_2 and C_3 are independent of p_o, ω,

D, and c for given values of v. Values of the form parameters, at different values of v, are shown in Table 4. The authors indicate that the minimum power requirement can not be attained in a practical seal; however, the value should, and can, be made low by appropriate choice of the form parameters. Bowden and Martin [19], in an article discussing the design of the Calder Hall nuclear reactor power plant, present data on the CO_2 compressors and show the general design of the buffered bushing seal used, alone with some performance data. Boon and Tal [22] show a design computed so as to fit in the Calder Hall blower. At the time of publication of the article the design had not been tested. However, the estimated power requirement of the visco seal was about 40% of that for the buffered bushing seal. Further, the loss of CO_2 measured with the bushing seal was over 200,000 times greater than that estimated for the visco seal. The loss by diffusion calculated for the visco seal was about 5 grams/year.

In the work of Boon and Tal it was acknowledged that the study was based upon the assumption of laminar flow. It was pointed out, however, that the seal could be used under conditions which resulted in turbulent operation.

In 1958 a patent was granted to Audemar [20] for a shaft seal which is shown applied to a small gas compressor. The seal consists of two viscosity pumps, one operating in gas and oil vapor and one operating in oil. A secondary oil seal provides a compact self contained system including a cooling system for the sealant flow stream.

Barrett, English and Williams [24] made use of the viscosity pump in a patent granted in 1960 for a parallel plate, thrust type, sealing gland.

Table 4

Form parameters u, t, C_2 and C_3 for equations (8) and (9). After Boon and Tal

v	u	t	α	C_2	C_3
2	0.59	0.56418	29° 26'	3.81	1.968
3	0.65	0.31798	17° 38'	4.01	1.356
4	0.70	0.21112	11° 55'	4.14	1.209
5	0.74	0.15530	8° 50'	4.48	1.147
6	0.77	0.12177	6° 57'	4.90	1.113
7	0.79	0.09928	5° 40'	5.30	1.092
8	0.81	0.08379	4° 47'	5.77	1.078
9	0.83	0.07267	4° 9'	6.30	1.067
10	0.84	0.06355	3° 38'	6.71	1.059

Two series of viscosity grooves are used, arranged in a herring-bone pattern, with an ungrooved land located between the two sets of grooves. The grooves on the pressurized gas side are arranged to develop a higher liquid pressure such that a gas-liquid interface is formed in the gas-side set of grooves. An arrangement is made to provide a supply of pressurized fluid to the ungrooved band to provide hydrostatic separation before starting. The seal is spring loaded in an axial direction with sufficient load to cause the operating clearance to be 33.5% of the groove depth. This corresponds to a value of v of 3.60.

Wigg and Battle [25] received a patent for a gas seal which makes use of the viscosity pump principle. The basic arrangement is as shown in Figure 1. However, a significant feature of this patent is that the sleeves which surround the grooved shaft are supported by bellows and because of this

feature the sleeves are made to be somewhat self-aligning. It appears that this arrangement (three different designs are illustrated in the patent) would permit the use of smaller clearances between the shaft and sleeve. Another feature of this patent is the use of the bellows support to provide a mechanical face seal which comes in contact as the shaft speed is reduced below a predetermined value. The force necessary to cause the mechanical face seal to move is provided by the pressurized liquid from the viscosity pump acting within the bellows cavity.

Frössel [26], taking the view that gear pumps, vane pumps, and other low speed pump units were unsuitable, presents a study of the viscosity type pump for use as bearing oil pumps in high speed machines. Low speed pumps must be driven by reduction gearing from the prime mover shaft or by auxillary motors, and the author felt that this was not the most reliable way of providing a certain oil supply to the bearings of turbines and compressors. The author regards high speed to be anything over 5000 rpm and envisioned the viscosity pump to be directly connected to the main shaft of the turbine or compressor. In this extensive experimental study the major consideration was in determining the most appropriate thread form for use in this type of pump in which the interest was in the capacity and head capability. The test series included "V" thread, trapezial thread ("V" thread with every second thread removed), and square thread screw pumps based on a 50 mm (1.97") shaft diameter. Three sizes of each thread type were studied. The range of test conditions was as follows:

Fluid viscosity	20 centistokes at 20°C
Surface speed of shaft	12.8 to 128 fps

Clearance	0.0013 to 0.00197 inches
Shaft speed	1500 to 15,000 rpm

During this series of tests very definite evidence of instability was observed. The instability, which could be suppressed by throttling the pump discharge, was reported to be due to operation of the pump going from laminar to turbulent conditions. Some evidence was also suggested which points to the possibility of cavitation or separation in the oil film. While the unstable operation could be suppressed, it was accomplished only with a decrease in head and capacity. The capacity of square thread was lower than that of the other forms studied, and it was also more prone toward instability. The experimental data presented in this paper indicate that the theory of Gümbel and Everling, which was derived for the square thread form, holds quite well for the other thread forms so long as the operation is in the laminar range. In the turbulent range of operation it would appear that experimental coefficients for each thread form will need to be determined. In the investigation by Frössel the problem of frictional dissipation was not considered in detail. In the case of the pump, which may not be true for a seal application, there is a considerable flow of fluid through the pump and this becomes the transporting medium for the frictional dissipation. As a matter of fact, the shut-off head of the pump was found by extrapolation rather than by test due to the lack of flow when the pump discharge was blocked. In general, the findings by Frössel are in agreement with those of Boon and Asanuma.

Asanuma [27] extends the theoretical studies of an earlier paper [11] and reports on extensive tests of various thread forms used in a visco seal. The equation for the sealing pressure is the same as equation (6).

It was found that the triangular thread was more suitable than the square, semi-circular or fan shaped grooves. The theoretically derived and experimentally verified dimensional relationships for the groove design are as follows:

a. The clearance must be as small as possible, but it is usually prescribed by the fit-quality available in fabrication. That is, the ratio R/c should take values between 32 and 2400. (Note that normal bearing R/c ratios will fall within this range.)
b. The groove width should be approximately the same as the land width.
c. The groove width should be 5 to 20 times the groove depth.
d. The clearance should be about 20% of the groove depth.
e. The helix angle should be about 10 to 11 degrees.

The author observed that multi-threaded screws provided the same sealing performance as single-threaded screws. Also, it was noted, as was observed by Frössel, that the performance of the plain shaft with a grooved sleeve was the same as a grooved shaft and a plain sleeve.

Asanuma also did considerable experimentation with grease as the sealant, and it was observed that sealing pressures developed were from 30 to 70 times greater than those developed with oil. There were problems, however, of cooling and viscosity control when using grease, which were more serious than when oil was used. Further, the groove design for grease must be altered to permit the grease to fill the grooves without trapping air. It is expected that the groove depth would be made deeper when grease is employed. When the grease temperature is carefully controlled at a constant value, the sealing performance is calculated in the same manner as for oil.

Hughes [28] presents the results of a design and subsequent development program of a visco seal for a shaft which penetrated a nuclear reactor containment vessel wall. The design was based on equation (5) presented by Whipple. The pressure developed in the seal was about 12% below the calculated values and this deviation was attributed to errors in the clearance and temperature measurements. The observation was made that the maximum system pressure which could be sealed was approximately 15% below the maximum pressure developed in the visco seal. Boon [22], on the other hand, assumes that the system pressure should be about 65 to 85% of the sealing pressure developed. The most serious problem experienced in this development program was that of controlling the sealant viscosity. Silicone oils having a high Viscosity Index were used to minimize this problem. The design proposed by Hughes is covered by patent of references [25].

DESIGN EXAMPLE

A typical visco seal design is shown in which use of the relations presented in this report is demonstrated.

Consider a gas-cooled reactor using helium, nitrogen, or carbon dioxide at a system pressure of 350 psia, and take a compressor operating at 5000 rpm and having a 4" diameter shaft as being the unit for which a seal must be provided.

Seal Pressure. Assume $P_s = 0.75\ p_o$

Boon [22] suggests that the system pressure should be approximately 65 to 85% of the pressure developed in the seal. Hughes [28] observed that the maximum system pressure which could be sealed was about 85% of the seal pressure. In the present example the value of 75% will be used. Thus,

$p_o = 350/0.75 = 467$ psia

Radial Clearance. Assume $c = 4 \times 10^{-3}$ inches

The radial clearance should be as low as possible but should be consistent with fabrication practice available and the differential expansion of the shaft and sealing sleeve. A radial clearance of 0.004" will be used which gives an R/c ratio of 500. It is anticipated that the clearance employed could be reduced if necessary.

Shaft Surface Velocity.

$U = \omega D/2 = 2\pi ND/60 \times 2 = 2 \times \pi \times 5000 \times 4/60 \times 2 = 1046.4$ in/sec.

Seal Length and Sealant Viscosity.

Making use of equation (5) from Whipple,

$p = 0.547 \mu LU/c^2$

In this equation p refers to the pressure rise in the seal. Thus,

$p_i = 467 - 350 = 117$ psi on the system side, and

$p_a = 467 - 14.7 = 452.3$ psia on the atmospheric side.

$\mu L_a = 452.3 \times (0.004)^2 / 0.547 \times 1046.4 = 12.65 \times 10^{-6}$

$\mu L_i = (117/452.3) \times 12.65 \times 10^{-6} = 3.27 \times 10^{-6}$

Assume a sealant is used which has a viscosity of 4.5×10^{-6} reyns at the operating temperature. Then,

$L_a = 12.65/4.5 = 2.81$ inches, and

$L_i = 3.27/4.5 = 0.727$ inches.

It should be noted that the total axial length of the seal grooves would be twice the 2.81" value or 5.62 inches, or longer. L_i and L_a refer to the axial length of groove which is filled with the sealant on the process side and atmospheric side respectively. The seal would need to be made the full length of 5.62 inches due to the fact that the system pressure could be

atmospheric at the initial start-up. Refer to Figure 3 to observe the motion of the sealant interfaces.

Power Loss.

Hughes [28] calculates the power loss as the simple frictional dissipation by viscous shear in an annulus as,

$Q = \mu \pi DLU^2 / c.$

$Q_a = 4.5 \times 10^{-6} \times \pi \times 4 \times 2.81 \times (1046.4)^2 / 0.004 = 43{,}400 \ \frac{\text{in-lbf}}{\text{sec}}$

$Q_a = 43{,}400 / 12 \times 778 = 4.64$ Btu/sec or 4.89 KW.

$Q_i = (117/452.3) \times 4.89 = 1.269$ KW

$Q = Q_i + Q_a = 4.89 + 1.269 = 6.16$ KW

It should be noted that equation (5) and equation (8a) are for maximum pressure development in the seal. The design can be altered, as will be demonstrated in a later section, to give a reduced power loss.

Geometry of Grooves.

The pressure rise computed above by equation (5) assumes $v = 3.61$, $u = 0.5$, and $t = 0.24470$, where $t = \tan\alpha$ and $\alpha = 13° 45'$.

$h = (v - 1)c = (3.61 - 1)(0.004) = 0.01044$ inches

Pitch of groove $= \pi Dt = \pi \times 4 \times 0.24470 = 3.079$ inches

Total groove width $= u\pi Dt = 0.5 \times \pi \times 4 \times 0.24470 = 1.5395$ inches

Total crest width $= (1-u)\pi Dt = 1.5395$ inches

The optimum ratio of groove width/groove depth was not considered by Whipple. However, Asamuma [27] suggests a ratio of 5 to 20, and Hughes [28] used a value of 18. If a value similar to this is used, the number of grooves becomes 9 and the width of each groove and each crest becomes,

$1.5395/9 = 0.1709$ inches.

Design Change to Reduce Q.

Consider the variation in design which occurs when the form parameters t, u, and v are changed. The dimensions used in the above example will not result in minimum power loss. Boon [22] indicates the asymptotic limiting power loss, with $u \rightarrow 1$ and $v \rightarrow \infty$, to be

$Q_{min} = 0.1644\ pND^2c,$

and the actual power requirement for finite values of v becomes,

$Q = C_3\ (0.1644\ pND^2c),$

where C_3 is taken from Table 4.

$Q_{min} = 0.1644 \times 452.3 \times 5000 \times 4^2 \times 0.004 = 23{,}780$ in-lbf/sec

$Q_{min} = 23{,}780 \times 3600 / 12 \times 778 \times 3413 = 2.69$ KW

Assuming $v = 6$, $u = 0.77$, $t = 0.12177$, $C_2 = 4.90$, and $C_3 = 1.113$ as indicated in Table 4.

$Q_a = 1.113 \times 2.69 = 3.04$ KW, and

$Q_i = (117/452.3) \times 3.04 = 0.786$ KW.

$Q = Q_i + Q_a = 0.786 + 3.04 = 3.826$ KW.

From equation (8),

$\mu L = C_2 pc^2 / 2U.$

$\mu L = 4.90 \times 452.3 \times 0.004^2 / 2 \times 1046.4 = 16.95 \times 10^{-6}$

Note that the product μL in this design is larger than that obtained for the maximum pressure design. If μ is again taken to be 4.5×10^{-6} reyns, then L_a and L_i become,

$L_a = 16.95 / 4.5 = 3.766$ inches, and

$L_i = (117/452.3) \times 3.766 = 0.975$ inches.

Note that further reductions in Q, with consequent increases in length,

could be made by taking v to be larger. The remaining groove dimensions become,

$h = (v - 1)c = (6 - 1)(0.004) = 0.020$ inches

Pitch $= \pi Dt = \pi \times 4 \times 0.12177 = 1.528$ inches

Total groove width $= u\pi Dt = 0.77 \times 1.528 = 1.177$ inches

Total crest width $= (1 - u)\pi Dt = 0.23 \times 1.528 = 0.3515$ inches

If 9 grooves are used the groove and crest widths become,

Groove width $= 1.177/9 = 0.1308$ inches

Crest width $= 0.3515/9 = 0.039$ inches

Heat Transfer.

As may be noted from the magnitude of Q calculated above, a provision for transfer of the frictional dissipation must be made. Utilizing a cooling jacket in the manner shown in Figure 4, the approximate area for heat transfer will be,

Area $= \pi \times 5 \times 8/144 = 0.874$ sq. ft.

$Q = U_o A_o \Delta T$

Assuming a sealant fluid temperature of 160°F and an average water temperature of 80°F, the ΔT becomes 80°F and U_o must be

$U_o = 3.826 \times 3413/0.874 \times 80 = 186.8$ Btu/hr-ft^2 - °F

The cooling water requirement, assuming a 20°F temperature rise for the water, would be approximately,

$m = 3.826 \times 3413/20 = 593$ lbm/hr or about 1.2 gpm.

Turbulent or Laminar Operation?

The calculations presented above are applicable for laminar operation only. The criterion for transition from laminar to turbulent operation has not been specifically established for the visco seal. However, if one makes

use of the relation normally used for journal bearing work, an estimate of the transition point may be made. The equation which is frequently used is,

$Re_{crit} = 41.1\,(D/2c)^{0.5}$.

$Re_{crit} = 41.1\,(500)^{0.5} = 916$.

If the density of the sealant fluid is taken to be about 0.0307 lbm/in^3, the Reynolds number becomes,

$$Re = Uc\rho/\mu = \frac{1046.4 \times 0.004 \times 0.0307}{4.5 \times 10^{-6} \times 386} = 74.$$

Since the operating Re is well below the Re_{crit}, it may be assumed that the operation of the seal is in the laminar region.

Design Summary.

System pressure	350 psia
Shaft diameter	4 inches
Radial clearance	0.004 inches
Shaft speed	5000 rpm
Sealant viscosity	4.5×10^{-6} reyns (lbf-sec/in^2)

Calculated dimensions and power loss:

	Calculated for maximum p	Calculated for reduced Q
Seal pressure, psia	467	467
Form parameter, u	0.5	0.77
Form parameter, t	0.2447	0.12177
Form parameter, v	3.61	6
Length, L , inches	5.62	7.532
Active length, L_a, inches	2.81	3.766
Active length, L_i, inches	0.727	0.975

Groove depth, h, inches	0.01044	0.020
Pitch, inches	3.079	1.520
Groove width, b, inches (9 grooves)	0.1709	0.1308
Crest width, inches (9 grooves)	0.1709	0.039
Power loss, KW	6.16	3.828

SUMMARY

The visco seal and visco pump have relatively long histories. However, not much use has been made of these devices in the United States insofar as can be determined from a study of technical literature. It is quite possible that some work has been done by seal and equipment manufacturers which has not been published because of proprietary considerations. The principles of operation have been quite well explored and experimentally verified for conditions of laminar flow. A considerable portion of the work described in this report has been empirical in nature but some of the studies have been combined analytical and experimental investigations of high quality. It is interesting to note, however, that the conclusions made by the various investigators have been quite similar. It would appear that the visco seal and visco pump have a large potential for effective use in numerous machines. These would include compressors, turbines, space vehicle power plants, and experimental reactor loops.

In considering the visco seal for use in gas-cooled reactor systems, the following factors seem worthy of note:

System Design-

The auxiliary systems required for the seals in current gas-cooled reactors are complex and expensive. One of the most significant advantages

of the visco seal is the possibility of using this seal with a much simplified auxiliary system. The investment in piping, storage tanks, heat exchangers, pumps, controls, and safety devices should be much less for the visco seal than is the case for buffered labyrinth or bushing seals. The provision for a continuous supply of sealant, in the event of power failure, could be provided by a relatively small pressurized accumulator. The characteristic curve for a visco pump or seal is shown in Figure 7 where the group $p/\mu U$ is plotted versus V/U. Note that the operating point of the pump, when operated as a seal, is at zero flow. This means that the quantity of sealant required is small, being the make-up for losses which may occur in operation.

A significant advantage of the visco seal may be noted from Figure 3. Note that the system pressure can vary from atmospheric to design values and the seal pressure can be kept constant. The movement of the system gas-sealant interface takes place automatically as the system pressure varies.

Stationary Seal-

Any seal used in a gas-cooled reactor must function at zero shaft speed. In some seal designs the provision of a static seal is a major problem. Also, the operation of the static seal may call for further complication of the auxiliary system. The visco seal, as has been demonstrated by Boon [16], and Frössel [17], can be modified to provide a static seal which is automatic in operation. The static seal provided by the visco seal will not, however, permit the removal of the seal for repair.

Cooling Requirement-

The thermal dissipation provided for the visco seal must, in all probability, be higher than that necessary for a bushing type seal. This

is due to the fact that the seal pressure depends upon the sealant viscosity. The viscosity of the sealant used in a visco seal would be higher than that necessary for an equivalent bushing seal. From the design example it is noted that the heat transfer problems associated with the visco seal are not unusually difficult. An advantage of the visco seal, however, is that heat exchangers for continuous flows of sealant fluid are not required.

Self-Aligning Features-

Boon [22] has suggested that the visco seal has a self-centering tendancy. It is believed, however, that the magnitude of the self-aligning forces will depend upon the specific seal design and this factor requires further study. It has been pointed out, however, that the visco seal can be designed so as to be mechanically self-aligning. The visco seal may have a slight advantage over the bushing seal in this regard due to the nature of the hydrodynamic forces in the two seal types.

Turbulence-

It has been stated by Boon [22] and experimentally demonstrated by Frössel [26] that the visco seal can operate in the turbulent range. Figure 8 indicates the character of the seal operation as it shifts from laminar to turbulent operation. The design of a visco seal for turbulent operation would require the use of experimentally determined coefficients. This area requires further study.

Diffusion-

The visco seal has been reported to have an advantage over the bushing seal insofar as losses by diffusion are concerned. [22] These observations have not been experimentally verified, however.

CONCLUSION

The survey of the technical literature available on the visco seal suggests the following tentative conclusions:

1. The visco seal has definite potential for use on the compressors and turbines of gas-cooled reactors.
2. The design example indicates that the clearances required for a visco seal can be made equal to or greater than those used for a bushing type seal.
3. The visco seal can be constructed with a simpler auxiliary seal system than that currently in use with buffered type labyrinth and bushing seals.
4. The visco seal can be designed to provide automatic static seals for zero shaft speed.
5. The visco seal can operate in the turbulent range.

The areas needing further study are:

1. Experimental coefficients for turbulent operation. These would include modifications to the equations for pressure generation and frictional dissipation.
2. Investigation of the magnitude of self-aligning forces in a visco seal and the effect of design changes on these forces.
3. Frictional dissipation calculations and the detail heat transfer calculations associated with the cooling system.
4. Theoretical studies of the diffusion to and from a visco seal and experimental verification of the calculations.

NOMENCLATURE

A	a geometric function in equation (2)
B	a geometric function in equation (2)
C_1	an experimental coefficient in equation (7)
C_2	a coefficient in equation (8)
C_3	a coefficient in equation (9)
D	shaft diameter
K_1	a geometric function in equation (5)
L	axial length of grooves
L_a	active length of grooves on outer side
L_i	active length of grooves on inner side
N	shaft speed, rpm
Q	power requirement or frictional dissipation
Q_a	frictional dissipation on outer side
Q_i	frictional dissipation on inner side
Re	Reynolds number
S	a sealing coefficient in equation (6)
T	temperature
U	shaft surface velocity
U_o	overall coefficient of heat transfer
V	volume rate of flow
V_{1c}	leakage flow through concentric annulus
V_{1e}	leakage flow through eccentric annulus
a	cross-sectional groove area
b	groove width

c	radial clearance
g_c	gravitational constant
h	groove depth
l	length of clearance leakage path
m	mass rate of flow
p	pressure
p_m	maximum pressure
p_o	seal design pressure
p_s	system pressure
p_i	$p_o - p_s$
p_a	p_o - $p_{ambient}$
t	tangent to pitch of groove
u	root width/root width + crest width
v	groove depth + clearance/clearance
α	helix angle
ε	eccentricity ratio
ω	angular velocity
μ	absolute viscosity
ρ	density

BIBLIOGRAPHY

1. ROWELL, H. S., D. FINLAYSON, "Screw Viscosity Pumps," Engineering, Vol. 114, Nov. 17, 1922, pp. 606-7.

2. ROWELL, H. S., D. FINLAYSON, "Screw Viscosity Pumps," Engineering, Vol. 126, Aug. 31, 1928, pp. 249-250, Sept. 28, 1928, pp. 385-7. Discussion, Nov. 23, 1928, pp. 659-660.

3. GUMBEL, L., E. EVERLING, Reibung und Schmierung im Maschinenbau, M. Krayn-Verlag, Berlin, 1925, 240 pages.

4. LAPICZEK, F., Pumpen und Turbinen, Springer, Berlin, 1932.

5. BROWNE, L. H., "Rotary Seal," U. S. Patent 2,230,881, Feb. 4, 1941.

6. GROBEL, L. P., "Shaft Seal," U. S. Patent 2,314,207, March 16, 1943.

7. YAGER, G. F., "Spindle Structure," U. S. Patent 2,430,752, Nov. 11, 1947.

8. WHIPPLE, R. T. P., "Herring-Bone Pattern Thrust Bearing," UKAEA, Atomic Energy Research Establishment, T/M - 29, August 24, 1949, 8 pages.

9. WOODROW, J., "Viscosity-Plates Flow and Loading," UKAEA, Atomic Energy Research Establishment, E/M 31, December 22, 1949, 6 pages.

10. WHIPPLE, R. T. P., "Theory of the Spiral Grooved Thrust Bearing with Liquid or Gas Lubricant," UKAEA, Atomic Energy Research Establishment, T/R 622, March 6, 1951, 23 pages.

11. ASANUMA, T., "Study on the Sealing Action by Viscous Fluid," (In Japanese) Trans. Japan Soc. Mech. Engrs., Vol. 17, No. 60, 1951, pp. 119-25.

12. WORDSWORTH, D. V., "The Viscosity Plate Thrust Bearing," UKAEA, Atomic Energy Research Establishment E/R 2217, October, 1952, 50 pages. Declassified for publication November 6, 1956.

13. SNELL, I. W., "Theory of Viscosity Plate Thrust Bearing based on Circular Geometry," UKAEA, Ministry of Supply, Division of Atomic Energy (Production) 5181, Declassified Reprint IPDC/P - 137, October 13, 1952, published 1959, 14 pages.

14. LEYER, A., "Keilschmierung oder Druckölschmierung?", Schweizerische Bauzeitung, January 1953, pp. 66-69.

15. van HOEK, P. H. F., "Overzichtsrapport over reeds verrichte onderzoekingen aan Visco-afdichtingen," Technische Hogeschool Te Delft, April 20, 1955, 28 pages.

16. BOON, E. F., S. HONINGH, D. C. van RIJSSEN, "Some Notes on Seals for Rotating Shafts," Proceedings, Fourth World Petroleum Congress - Section VII/A, Paper 1, June 10, 1955, 18 pages.

17. FRÖSSEL, W., "Hydrodynamisch Wirkende Wellendichtung," (Hydrodynamic Shaft Seals), Konstrucktion, Vol. 8, No. 11, November 1956, pp. 463-465. Abstract in The Engineers Digest, Vol. 18, No. 1, 1957, pp. 13-20.

18. KLÜPFEL, A., "Berührungslose Ölfilm-Wellendichtung für wasserstoffgekühlte Stromerzeuger," (Contactless Oilfilm Shaft Seal for Hydrogen-Cooled Generators), German Patent 1,012,999, August 1, 1957.

19. BOWDEN, A. T., G. H. MARTIN, "Design of Important Plant Items," Jnl. Brit. Nucl. Energy Conf., Vol. 2, 1957, pp. 156-167.

20. AUDEMAR, P., "Shaft Seal," U. S. Patent 2,844,418, July 22, 1958.

21. TRUTNOVSKY, K., Beruehrungsdichtungen an ruhenden und bewgten Maschinenteilen, Springer-Verlag, 1958.

22. BOON, E. F., S. E. TAL, "Hydrodynamische Dichtung für rotierende Wellen," (Hydrodynamic Seal for Rotating Shafts), Chemie-Ing.-Technik., Vol. 31, No. 3, January 31, 1959, pp. 202-12. Translation by R. Presser published by UKAEA, 1961 as DEO Information Series 13 (CA).

23. WHITLEY, S., L. G. WILLIAMS, "The Gas-Lubricated Spiral-Groove Thrust Bearing," UKAEA, Industrial Group, L. G. Report 28 (RD/CA), 1959, 33 pages.

24. BARRETT. T., D. ENGLISH, K. J. WILLIAMS, "Improvements in or Relating to Shaft Seals," Great Britain Patent 827,015, January 27, 1960.

25. WIGG, R. E., N. BATTLE, "Improvements in or Relating to Sealing Means," Great Britain Patent 834,923, May 11, 1960.

26. FRÖSSEL, W., "Hochtourige Schmierölpumpe," (High-Speed Lubricating Oil Pump), Konstrucktion, Vol. 12, No. 5, 1960, pp. 195-203.

27. ASANUMA, T., "Studies on the Sealing Action of Viscous Fluids," International Conference on Fluid Sealing, Paper A 3, April 17-19, 1961, BHRA, Harlow, Essex, England, 26 pages.

28. HUGHES, D. P., "Shaft Seal for High Gas Pressures," International Conference on Fluid Sealing, Paper C 1, April 17-19, 1961, BHRA, Harlow, Essex, England, 1961, 14 pages.

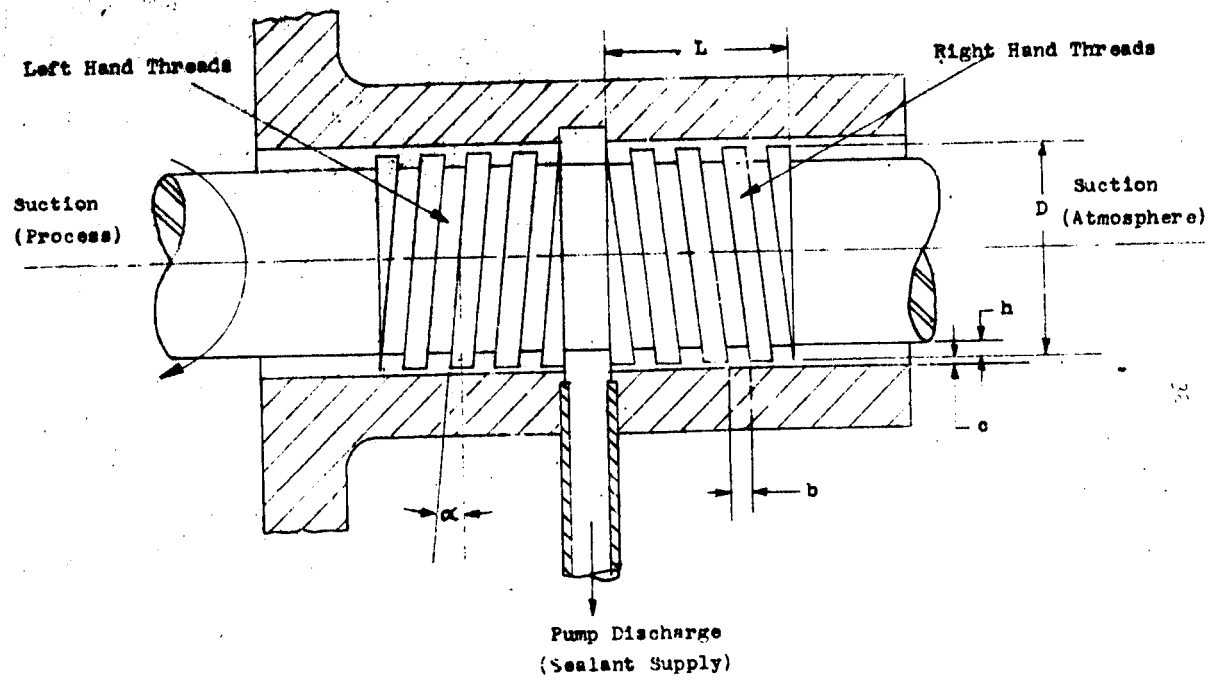

Figure 1. Basic Elements of a Viscosity Pump (Visco Seal)

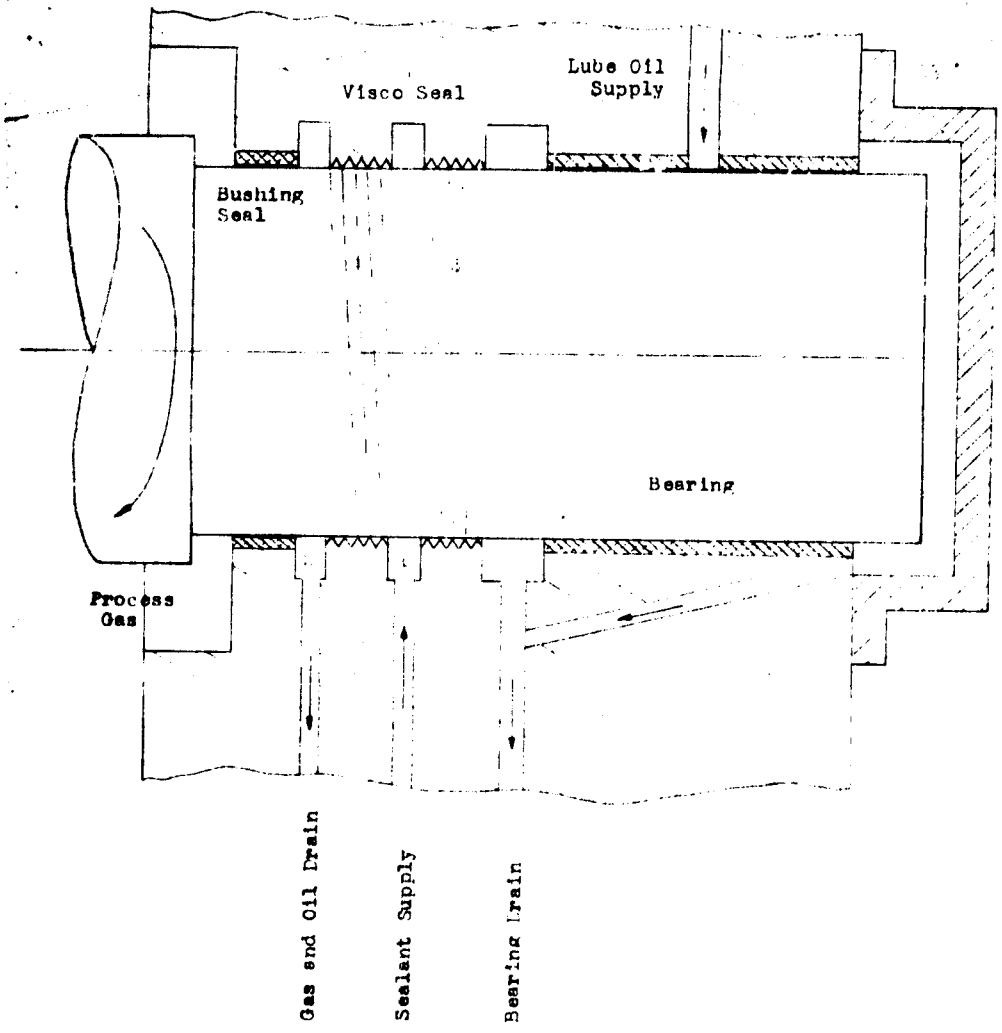

Figure 2. Visco Seal used as a Bearing Seal (after Grobel)

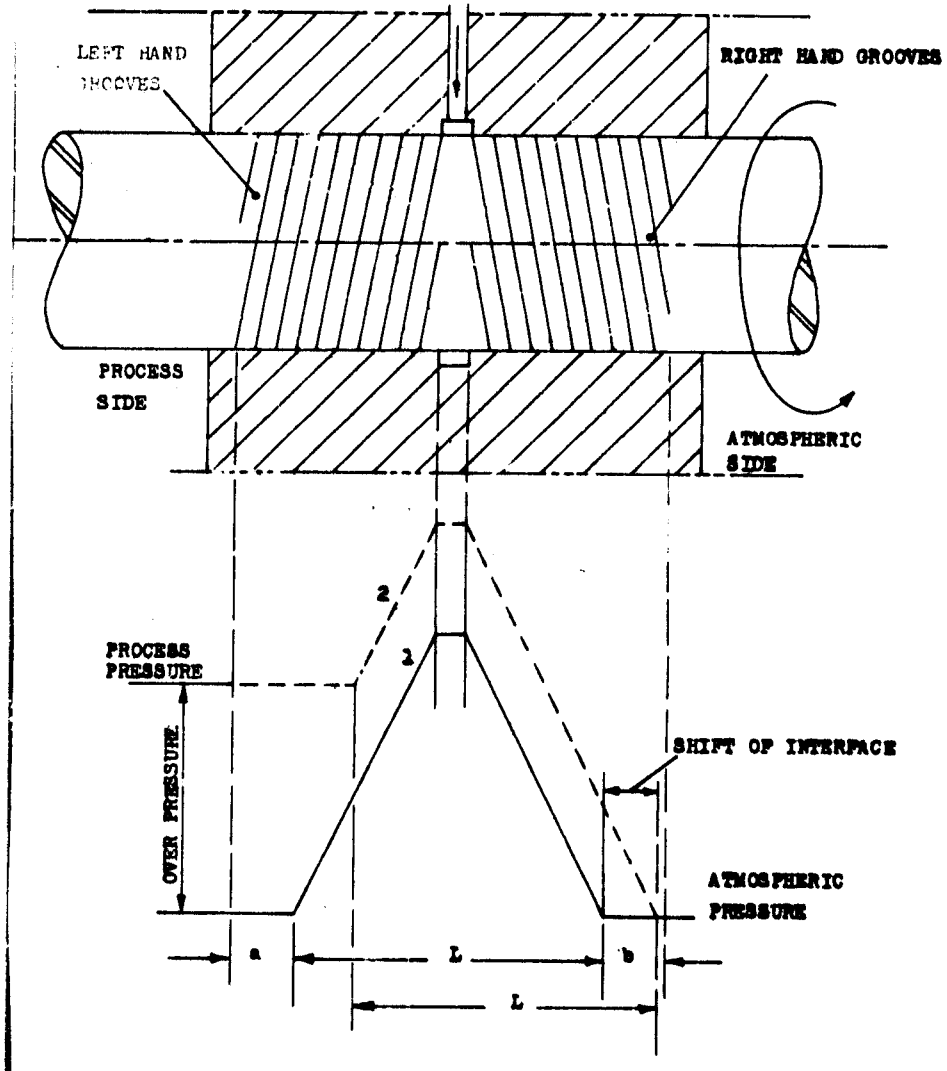

FIGURE 3 - PRESSURE PROFILES IN A VISCO SEAL (AFTER BOON et al.)

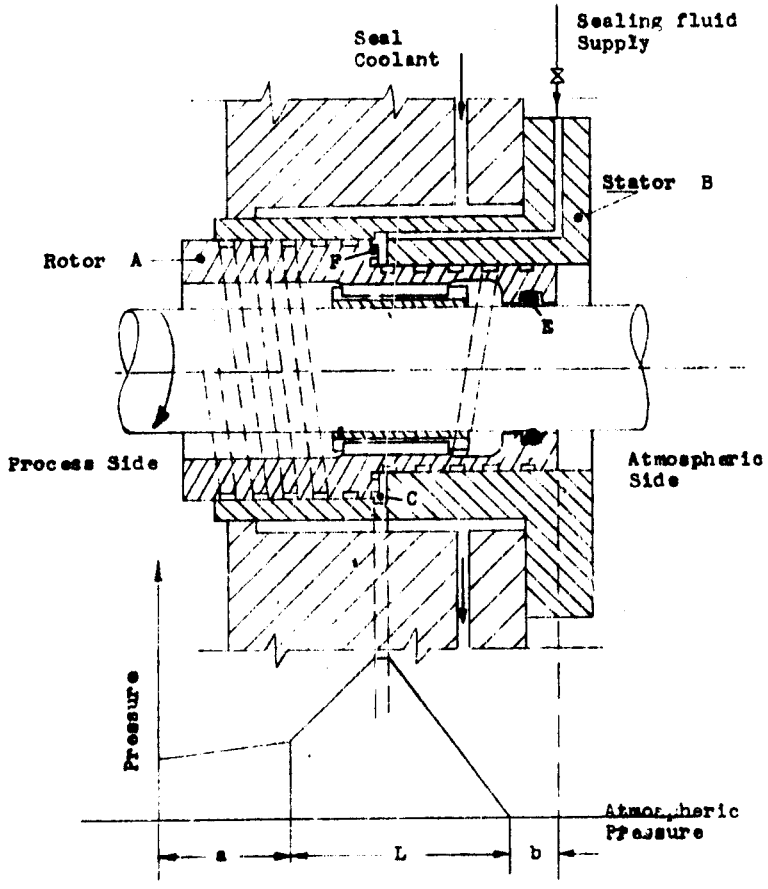

Figure 4. Visco Seal Modified so as to Function as a Static Seal (after Boon)

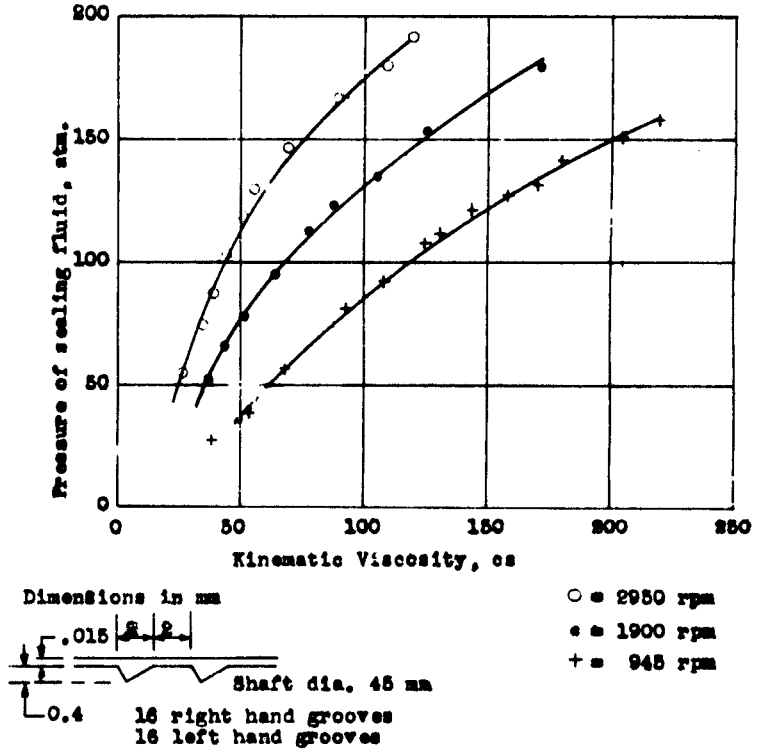

Figure 5. Typical Pressure Curves for a Seal Similar to Fig. 3 (after Boon [16])

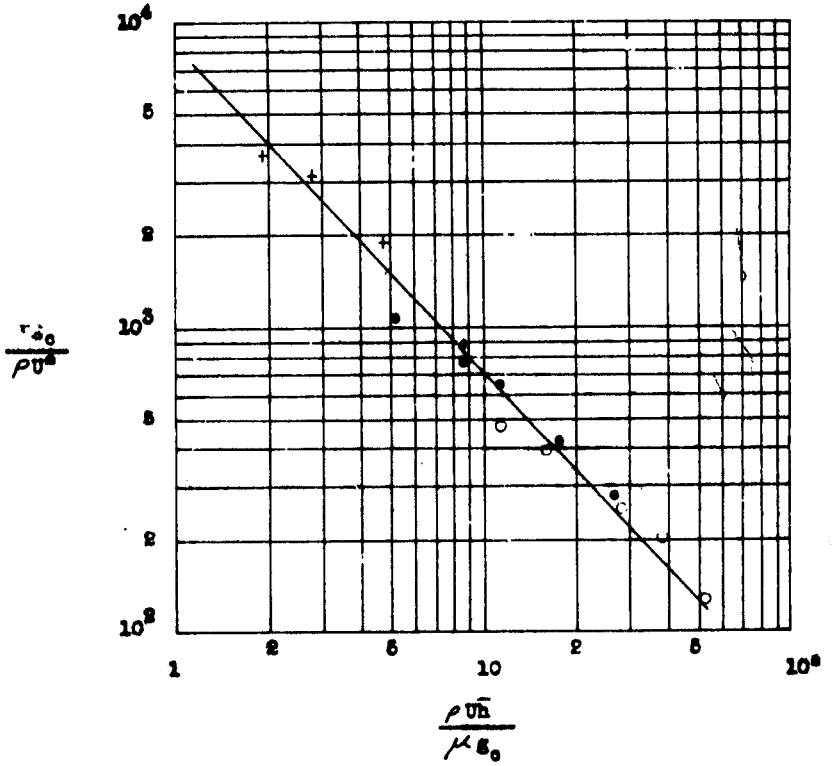

$\bar{h}$ is the average groove depth. For the grooves shown in Fig. 5 Boon, Honingh and Van Rijsem used $\bar{h} = 1/2\ h$

Figure 6. Dimensionless Plot of Data shown in Figure 5 (after Boon [16])

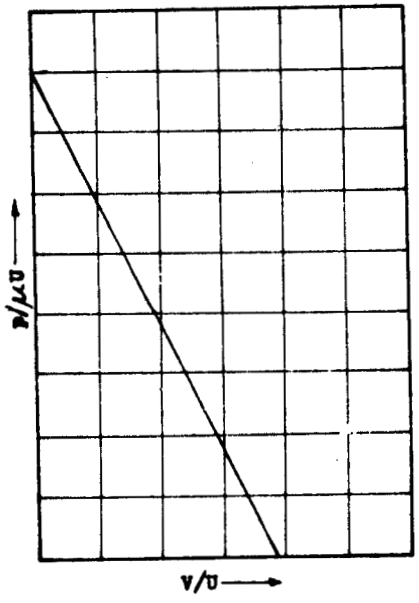

Figure 7
Theoretical Characteristic of a Visco Pump. Laminar Conditions

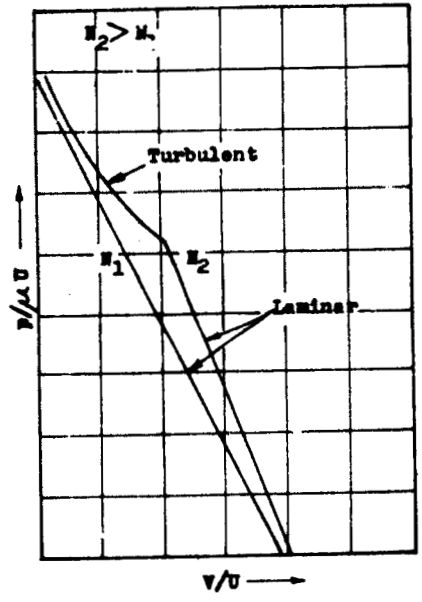

Figure 8
Change in Characteristics of a visco Pump on Transition from Laminar to Turbulent Flow

END