N 80K

N66-87909
(ACCESSION NUMBER)
(THRU)
19
(PAGES)
None
(CODE)
CR 79634
(NASA CR OR TMX OR AD NUMBER)
(CATEGORY)
FACILITY FORM 602

PROGRAM & REPORT

Prepared for the

Space Mechanics Division of the

LANGLEY RESEARCH CENTER

LUNGFISH

LUNAR GRAVITATIONAL FIELD IN SPHERICAL HARMONICS

BOOK 4

COMPUTER USAGE COMPANY, INC.

Contract No. NAS1-4998
February, 1966

Distribution of this report is provided in the interest of information exchange. Responsibility for the contents resides in the author or organization that prepared it.

PART 6

SOLVE PROGRAM

TABLE OF CONTENTS

		page
PART 6		
SECTION I	INTRODUCTION	1.1
SECTION II	SYSTEM FLOW CHARTS	
a)	Normal SOLVE Run	2.1
b)	INVERT ONLY Run	2.2
SECTION III	USER INFORMATION	
a)	Input Cards	3.1
b)	Operating Instructions, SOLVE	3.4
c)	Edit Later	3.5
d)	Operating Instructions, EDIT LATER	3.6
e)	Parameter Labels	3.7
f)	Program Restrictions	3.9
g)	Error List	3.10
h)	Program Deck Arrangement	3.13
i)	File Block Options	3.14
j)	Tape Formats	3.15
	Square Matrix	3.16
	Parameter Set Matrix	3 17
	Backsubstitution Matrix	3.18
k)	Common Definitions	
	PERM	3.19
	INPUT	3.21
SECTION IV	SUBROUTINE WRITEUPS	
MAIN		4.1
BACKSB		4.3
BEDIT		4.4
CALTYP		4.5
CHECK		4.6
COMB		4.7
EDIT		4.8
ELIM		4.10
ERROR		4.12
INCK		4.13
INVERT		4.15
LBLSUP		4.16
MATSUP		4.17
MINV		4.18
OPARC		4.19
OPGRAV		4.20
OPSTAT		4.21
SUPRSS		4.22
UPCOMB		4.23

	page
SECTION V FLOW CHARTS	
MAIN	5.1
BACKSB	5.6
BEDIT	5.8
CALTYP	5.9
CHECK	5.10
COMB	5.11
EDIT	5.13
ELIM	5.17
ERROR	5.21
INCK	5.22
INVERT	5.28
LBLSUP	5.29
MATSUP	5.30
MINV	5.31
OPARC	5.32
OPGRAV	5.35
OPSTAT	5.38
SUPRSS	5.42
UPCOMB	5.43

SECTION I

INTRODUCTION

INTRODUCTION

B-matrices from different arcs are combined and inverted to yield parameter corrections. At this point, parameter corrections may be suppressed or eliminated and any desired selection of parameters may be used in the solution. SOLVE offers complete flexibility in the selection of arcs used in the solution and in the parameters whose corrections are obtained from the solution.

The solution is now used as a correction set to update the parameters. If necessary, the new parameter set can be used as a starting-point for a second run through the entire program. This will be necessary when the parameter corrections are large enough to violate the assumed linearity of the model.

SECTION II

SYSTEM FLOW CHART

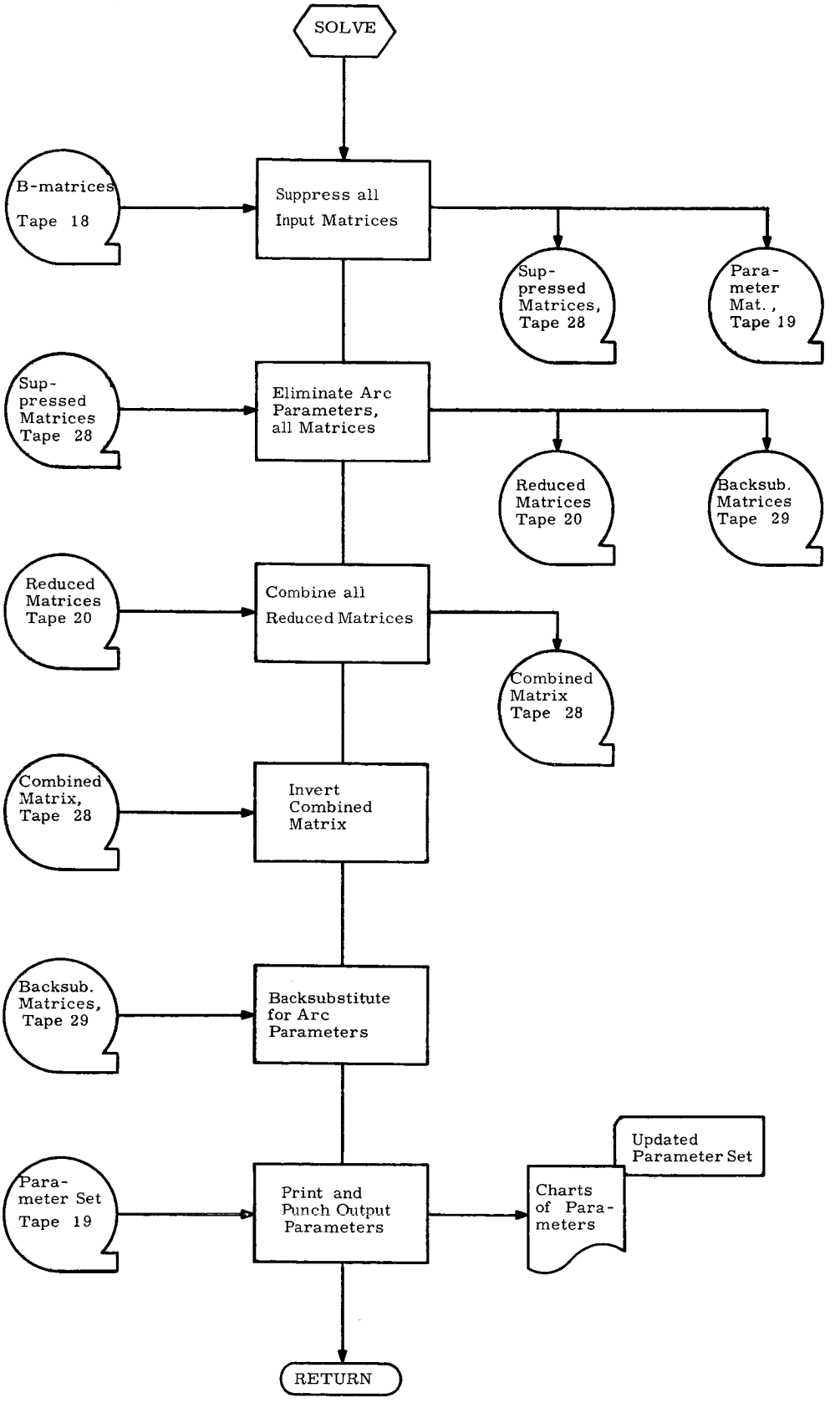
SOLVE
B-matrices Tape 18
Suppress all Input Matrices
Sup-pressed Matrices, Tape 28
Para-meter Mat., Tape 19
Sup-pressed Matrices Tape 28
Eliminate Arc Parameters, all Matrices
Reduced Matrices Tape 20
Backsub. Matrices Tape 29
Reduced Matrices Tape 20
Combine all Reduced Matrices
Combined Matrix Tape 28
Combined Matrix, Tape 28
Invert Combined Matrix
Backsub. Matrices, Tape 29
Backsubstitute for Arc Parameters
Updated Parameter Set
Para-meter Set Tape 19
Print and Punch Output Parameters
Charts of Para-meters
RETURN

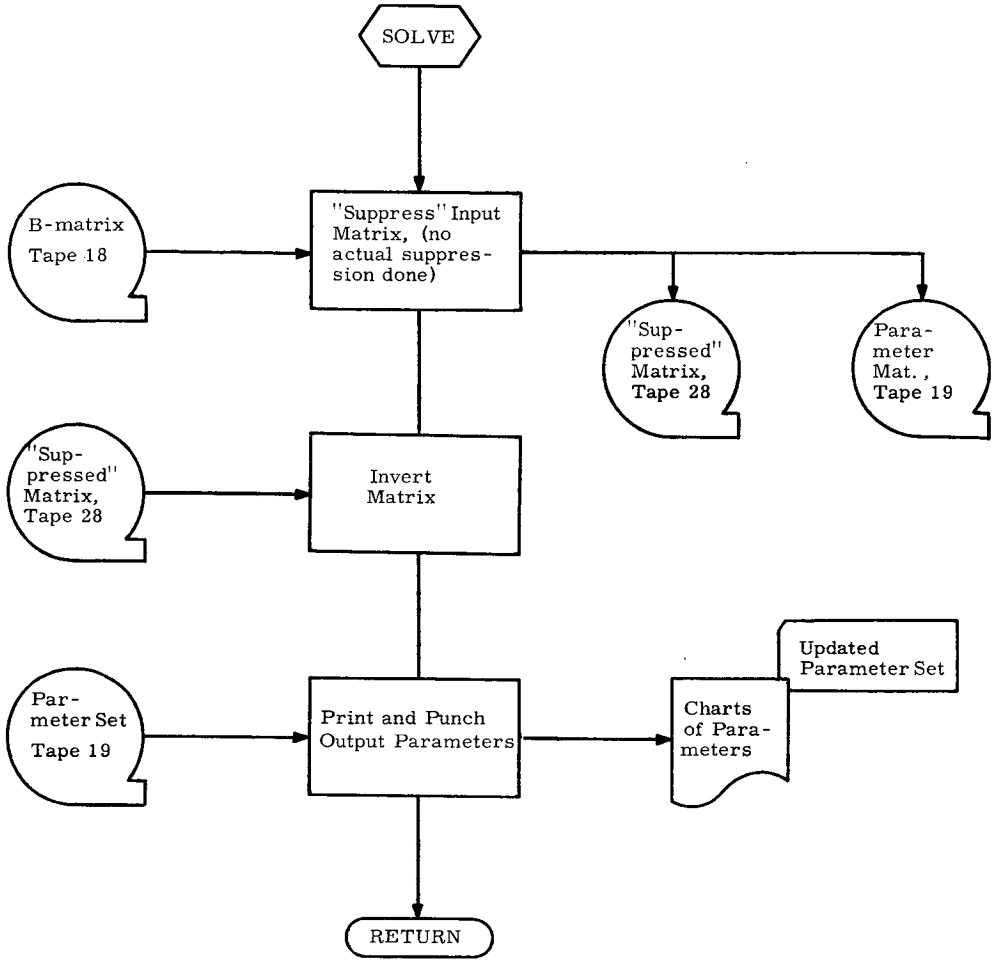
SOLVE
B-matrix Tape 18
"Suppress" Input Matrix, (no actual suppression done)
"Suppressed" Matrix, Tape 28
Parameter Mat., Tape 19
"Suppressed" Matrix, Tape 28
Invert Matrix
Updated Parameter Set
Parameter Set Tape 19
Print and Punch Output Parameters
Charts of Parameters
RETURN

SECTION III

USER INFORMATION

INPUT CARDS

1) Card Type One, Header Card

cc 1-72	Alpha-numeric data to be printed at the top of each page of output. This card must be present.

2) Card Type Two, Options Card

cc 5	Integer 0, 1 or 2, as follows: 0 - Input Format Check on Tape and Card Input 1 - Input Format Check on Card Input Only 2 - No Input Format Check
cc 10	Integer 0 or 1, as follows: 0 - Indicates a normal SOLVE run 1 - Indicates an invert only SOLVE run
cc 15	Integer 0 or 1, as follows: 0 - The edit tape will be printed in a later job. 1 - The edit tape will be printed in this job. This card must be present.

3) Card Type Three, Edit Card

cc 5	Edit code for the input B matrices
cc 10	Edit code for the input parameter set matrices
cc 15	Edit code for the suppressed matrices
cc 20	Edit code for the reduced matrices
cc 25	Edit code for the back-substitution matrices
cc 30	Edit code for the combined matrix
cc 35	Edit code for the inverse matrix

The "Edit Codes" are integers, as follows:

1 - Unnormalized

2 - Normalized, diagonal elements one

3 - Inverse

4 - Identification Records Only

5 - Normalized Inverse with Standard Deviations

(Note: For more detail on edit formats, see the subroutine write-up for EDIT)

This card must be present.

4) Card Type Four, Combined Matrix Data

cc 1 - 5	Positive integer less than or equal to 99999 or zero; the matrix identification number for the combined matrix.
cc 9 - 20	Alpha-numeric data--the name of the combined matrix.
cc 24 - 25	The number of parameters to be suppressed in the combined matrix. Zero or a positive integer less than 51. This card must be present in a normal SOLVE run.

5) Card Type Five, Combined Matrix Suppression List

cc 1 - 70	The labels or code labels of parameters to be suppressed in the combined matrix, if there are any. These are integers, right adjusted in five-column fields. The list may extend over one or more cards, but there should be no blank fields embedded in the list. The parameter labels need not be in sort. The various code labels are described in the section on Parameter Labels, page 3.7. This card must be present in a normal SOLVE run where the number of parameters to be suppressed in the combined matrix is greater than zero.

6) Card Type Six, B Matrix Data

cc 1 - 5	B matrix indentification number, as follows: 0 through 99998 indicates the matrices to be used in this SOLVE run.

99999 indicates that all B matrix cards have been read and is the last card of the data deck. The other fields in the 99999 card are blank.

cc 9 - 20 New alpha-numeric name to be attached to the B matrix. If this is blank, the name of the B matrix will not be changed.

cc 24-25 The number of parameters to be suppressed in the B matrix. Zero or a positive integer less than 51. This card must be present in a normal SOLVE run.

7) Card Type Seven, B Matrix Suppression List

This card is exactly the same as Card Type Five, except it refers to the input B matrix, not the combined matrix.

OPERATING INSTRUCTIONS

1) The system control cards required in the overall deck setup are:

```
$JOB
$SETUP      04
$SETUP      16        (omit if EDIT LATER option off)
$EXECUTE    IBJOB
$IBJOB
        SOLVE decks, binary or source
$DATA
        SOLVE data deck
```

2) The tape setup is:

DCS Unit	Tape Function
04	Input tape, produced by MERGE
05	Scratch tape, or disk file
06	Scratch tape, or disk file
14	Scratch tape, or disk file
15	Scratch tape, or disk file
16	Edit tape to be saved if the EDIT LATER option is on, otherwise it can be a disk file

3) Output consists of punched cards, printing and the EDIT LATER tape, if that option is on.

EDIT LATER

EDIT LATER is simply a separate program which will print the edit tape from a SOLVE run. It consists of the routine EDIT, compiled as a main routine, and the subroutines EDIT calls. These subroutines are CHECK, ERROR and MINV. There is no card input to EDIT LATER.

OPERATING INSTRUCTIONS, EDIT LATER

1) The system control cards required in the overall deck setup are:

```
$JOB
$SETUP        16
$EXECUTE      IBJOB
$IBJOB
```

EDIT LATER DECKS, Binary or Source

2) The tape setup is:

DCS Unit	Tape Function
16	Edit Tape

3) Output consists of printing.

PARAMETER LABELS

Parameter labels are used to identify the rows and columns of a matrix. They are as follows:

1) **Gravity parameter labels, five digit integers.**

		m	n	
C_{mn}	1	xx	xx	Where: $n \geq m$
S_{mn}	2	xx	xx	$m \leq 5$
				$m + n \leq 10$

The gravity parameter labels are in strict numeric sequence.

2) Station parameter labels, four digit integers.

		Stat. No., p	
r_p	1	xxx	Where: xxx $\leq$ 998
ϕ_p	2	xxx	
γ_p	3	xxx	

The station parameter labels are in sequence according to station number as the major key, and first digit as the minor key.

3) Arc parameter labels, three digit integers.

Radiation Pressure	3	xx	xx = 01 to 03
Thrust	2	xy	xx = 1 or 2; and y = 1 to 3
Initial Conditions	1	xx	xx = 01 to 06
Orbital Elements	1	xx	xx = 07 to 12

The arc parameter labels are in sequence according to the first digit as major key, in descending order; and the last two digits as minor key, in ascending order.

4) Special parameters, treated as station parameters by SOLVE.

Earth-Moon Separation Multiplier	5	999
Speed of light	6	999

5) **Code labels**

Use the preceding parameters labels to indicate the parameters to be suppressed. To facilitate the suppression of groups of parameters, use the following code labels:

Gravity Parameters

	m	n	
3	xx	xx	C_{lk} and S_{lk} are suppressed for all l, $k \geq m$, n respectively.
4	xx	xx	Both C_{mn} and S_{mn} are suppressed.

Station Parameters

	Stat. No., p	
4	xxx	r_p, Φ_p, Υ_p are all suppressed.

PROGRAM RESTRICTIONS

The following are various restrictions on the size of the matrices and arrays processed by SØLVE:

1. The input matrix may not exceed order 100.
2. The matrix to be inverted may not exceed order 82.
3. The number of parameters to be eliminated from a given matrix may not exceed 60.
4. The number of parameters to be suppressed from the combined matrix, or from an input matrix, may not exceed 50.
5. There is no restriction on the number of input matrices which can be processed except that they must all appear on one tape.

ERROR LIST

Number	Routine	Meaning
1	ELIM	A negative or zero pivot element found during elimination. The matrix is either ill-conditioned for elimination or not positive definate.
2	ELIM	Program error, dump core.
3	COMB	No match found between the combined matrix label record, formed by UPCOMB, and the label record of the new matrix to be combined.
5	BACKSB	No match found between the label record of the inverted matrix and the label record of the back-substitution matrix.
6	BEDIT	Edit requested of scratch tape.
7	MAIN	Matrix requested by input cards not found on tape 18 (input).
8	OPARC	Matrix called for in argument to OPARC not found on parameter tape, (tape 19).

The following errors refer to an input matrix or card.

10	INCK	Record type code word, IRTI, for the ID record is not of the form xxxx1.
11	INCK	Matrix identification number is 99999
12	INCK	The number of columns is greater than 101.
13	INCK	The number of rows plus one is not equal to the number of columns of a B matrix.
14	INCK	The number of observations is less than one for a B matrix.

15	INCK	The input square matrix is neither a B matrix nor a combined matrix.
16	INCK	The number of rows is not one in a parameter set matrix.
17	INCK	The type code word is not "8" for a parameter set matrix.
18	INCK	Record type code word, IRT2, for the label record is not of the form xxxx2.
19	INCK	Illegal parameter label, less than 100 or greater than 99999.
20	INCK	Illegal gravity parameter label, or gravity parameter labels out of sort.
22	INCK	Illegal station parameter label, or station parameter labels out of sort or some missing.
23	INCK	Illegal station parameter label with station number 999.
24	INCK	Illegal arc parameter label, or arc labels out of sort or a parameter missing.
28	INCK	Input tape does not consist of at least one B matrix and its parameter set matrix.
29	INCK	Illegal value on option card, run continues with option set to zero.
30	INCK	Illegal value on edit card, run continues with option set to one.

31	INCK	Illegal value for combined matrix identification number, i.e., negative or greater than 99999.
32	INCK	The number of parameters to be suppressed in the combined matrix is negative or greater than fifty.
33	INCK	One of the suppression lists contains an illegal parameter label, less than 100.
34	INCK	Illegal gravity parameter label in a suppression list.
35	INCK	Illegal station parameter label in a suppression list.
36	INCK	Illegal arc parameter label in a suppression list.
37	INCK	Illegal value for input B matrix identification number, negative or greater than 99999.
38	INCK	The number of parameters to be suppressed in an input matrix is negative or greater than fifty.

PROGRAM DECK ARRANGEMENT

The SOLVE decks do not have to be in any special order. They are currently set up in the following order:

.UN18.
.UN19.
.UN20.
.UN28.
.UN29.
.UN30.
MAIN
BACKSB
BEDIT
CALTYP
CHECK
COMB
EDIT
ELIM
ERROR
INCK
INVERT
LBLSUP
MATSUP
MINV
OPARC
OPGRAV
OPSTAT
SUPRSS
UPCOMB

FILE BLOCK PROGRAM OPTIONS

1) Tape 18:
   Filename is "UNIT18"
   Mode is "BIN"
   Unit assignment is "A(1)"

2) Tape 19:
   Filename is "UNIT19"
   Mode is "BIN"
   Unit assignment is "A(2)"

3) Tape 20:
   Filename is "UNIT20"
   Mode is "BIN"
   Unit assignment is "A(3)"

4) Tape 28:
   Filename is "UNIT28"
   Mode is "BIN"
   Unit assignment is "B(1)"

5) Tape 29:
   Filename is "UNIT29"
   Mode is "BIN"
   Unit assignment is "B(2)"

6) Tape 30:
   Filename is "UNIT30"
   Mode is "BIN"
   Unit assignment is "B(3)"

TAPE FORMATS

The main portion of SOLVE uses five tapes, identified in the code as 18, 19, 20, 28, and 29, all binary. There are three types of data which may appear on these tapes. They are (1) a square matrix, (2) a rectangular backsubstitution matrix, and (3) a parameter set matrix. The square matrix may be an original B, a suppressed, a reduced, a combined, or an inverse combined matrix. All of these matrices are in a standard format. The last record on each tape is a dummy matrix ID record (the first record of any matrix), with a negative record type.

The function of each tape is as follows:

Tape 18: Input tape to SOLVE, containing all B matrices and their associated parameter set matrices, written on tape in pairs.

Tape 19: Scratch tape, holds the parameter set matrices.

Tape 20: Scratch tape, holds the reduced matrices.

Tape 28: Scratch tape, holds the suppressed matrices, then the combined matrix.

Tape 29: Scratch tape, holds the backsubstitution matrices.

The other tape used by SOLVE is tape 30, the edit tape, also binary. The first record of this tape is a twelve word alpha-numeric page header for all printed output. The rest of the tape contains some mixture of complete matrices in standard formats and the identification records (the first two records) of various matrices. The only modification to the matrix records occurs in the ID record, word ITYPE, which is modified to indicate the type of edit desired, as well as the type of matrix. The last record of the tape is a dummy ID record, with a negative record type.

STANDARD FORMAT, SQUARE MATRICES

Matrix Identification (ID) Record, One Per Matrix

MNEMONIC	NO. WDS.	FORMAT	CONTENTS
IRT1	1	Integer	"10001"
IDMAT	1	Integer	Matrix Identification Number, 1 to 99998
NRØW	1	Integer	Number of matrix data rows
NCØL	1	Integer	Number of matrix data elements per row, including Right Hand Side element
V1	1 x 2	Double	Total Variance
V2	1 x 2	Double	Dummy Variance word
V3	1 x 2	Double	Arc Variance
NØB	1	Integer	Number of Observations
ITYPE	1	Integer	Code for matrix type, as follows: "1" B-matrix "3" Combined matrix "5" Reduced matrix "6" Inverse combined matrix "7" Suppressed matrix
BNAME	2	Alpha	Alpha-numeric name for matrix, for editing purposes only. It can be blanks.

Matrix Label Record, One Per Matrix

MNEMONIC	NO. WDS.	FORMAT	CONTENTS
IRT2	1	Integer	"10002"
IDUM	1	Integer	Dummy parameter label
LABS	NCØL-1	Integer	Parameter labels

Matrix Data Element Records, NROW Per Matrix

MNEMONIC	NO. WDS.	FORMAT	CONTENTS
IRT3	1	Integer	"10003"
RHS	1 x 2	Double	Right Hand Side element
DATA	(NCØL-1)x 2	Double	Matrix data elements, one matrix row

End of Logical Tape Record, One Per Tape

MNEMONIC	NO. WDS.	FORMAT	CONTENTS
IRT	1	Integer	" - 19991"
IDUM	13	Integer	Dummy words to fill out record

STANDARD FORMAT, PARAMETER SET MATRIX

Parameter Set Identification (ID) Record, One Per Matrix

MNEMONIC	NO. WDS.	FORMAT	CONTENTS
IRT1	1	Integer	"10011"
IDMAT	1	Integer	Matrix Identification Number (same as in matrix ID record for corresponding matrix)
NRØW	1	Integer	"1"
NCØL	1	Integer	Number of elements in parameter set
IDUM	7	Integer	Dummy words to fill record
ITYPE	1	Integer	"8"
BNAME	2	Alpha	Alpha-numeric name for parameter set, for editing only. It may be blanks.

Parameter Set Label Record, One Per Matrix

MNEMONIC	NO. WDS.	FORMAT	CONTENTS
IRT2	1	Integer	"10012"
LABS	NCØL	Integer	Parameter Labels

Parameter Set Data Element Record, One Per Matrix

MNEMONIC	NO. WDS.	FORMAT	CONTENTS
IRT3	1	Integer	"10013"
DATA	NCØL x 2	Double	Parameter Values

BACKSUBSTITUTION MATRIX FORMAT

Matrix Identification (ID) Record, One Per Matrix

MNEMONIC	NO. WDS.	FORMAT	CONTENTS
IRT1	1	Integer	"20001"
IDMAT	1	Integer	Matrix Identification Number, 1 to 99998
NRØW	1	Integer	Number of matrix data rows
NCØL	1	Integer	Number of matrix data elements per row, including Right Hand Side element and the Eliminated Parameter label
V1	1 x 2	Double	Total Variance
V2	1 x 2	Double	Dummy Variance
V3	1 x 2	Double	Arc Variance
NØB	1	Integer	Number of Observations
ITYPE	1	Integer	"2"
BNAME	2	Alpha	Alpha-numeric name for matrix, for editing purposes only. It may be blanks.

Matrix Label Record, One Per Matrix

MNEMONIC	NO. WDS.	FORMAT	CONTENTS
IRT2	1	Integer	"20002"
IDUM	2	Integer	Dummy parameter label
LABS	NCØL-2	Integer	Parameter labels for matrix columns

Matrix Data Element Records, NROW Per Matrix

MNEMONIC	NO. WDS.	FORMAT	CONTENTS
IRT3	1	Integer	"20003"
LAB	1	Integer	Parameter label for matrix row
IDUM	1	Integer	Dummy word for padding
RHS	1 x 2	Double	Right Hand Side element
DATA	(NCØL-2) x 2	Double	Matrix data elements, one matrix row

End of Logical Tape Record, One Per Tape

MNEMONIC	NO. WDS.	FORMAT	CONTENTS
IRT	1	Integer	" - 29991"
IDUM	13	Integer	Dummy words for padding

PERM COMMON DEFINITIONS

MNEMONIC	NO. WDS.	FORMAT	CONTENTS
B	82 x 2	Double	Right hand side or solution vector for inversion
BNEW	60 x 2	Double	Solution vector from backsubstitution
SIGTØN	1 x 2	Double	Signal to noise ratio
V1	1 x 2	Double	Total variance
V2	1 x 2	Double	Dummy variance words
V3	1 x 2	Double	Arc variance
V1C	1 x 2	Double	Combined matrix total variance
V2C	1 x 2	Double	Combined matrix dummy variance
V3C	1 x 2	Double	Combined matrix arc variance
IRT1	1	Integer	Record type one (ID)
IDMAT	1	Integer	Matrix identification number
NRØW	1	Integer	Number of rows in matrix
NCØL	1	Integer	Number of columns in matrix
NØB	1	Integer	Number of observations
ITYPE	1	Integer	Matrix type
BNAME	2	Alpha	Matrix alpha-numeric name
IRT2	1	Integer	Record type two (label)
LABS	101	Integer	Parameter labels record
LABSI	82	Integer	Labels of inverted matrix
NRØWI	1	Integer	Number of rows in inverted matrix
LABSN	60	Integer	Labels of parameters solved for by backsubstitution
NRØWN	1	Integer	Number of elements in LABSN
NGRAV	1	Integer	Number of gravity parameters
NSTAT	1	Integer	Number of station parameters
NARC	1	Integer	Number of arc parameters
JPAGE	1	Integer	Printed output page number

MNEMONIC	NO. WDS.	FORMAT	CONTENTS
LINE	1	Integer	Printed output line number
NØREC	1	Integer	Number of backspaces necessary to position tape at 10001 record
NØREC2	1	Integer	Number of backspaces necessary to position tape at 10001 record
ØBVS	1	Real	Total number of observations
ALPHA	12	Alpha	Page header for printed output
IDCØMB	1	Integer	Matrix identification number for combined matrix
NRØWC	1	Integer	Number of rows in combined matrix
NCØLC	1	Integer	Number of columns in combined matrix
NØBC	1	Integer	Number of observations in combined matrix
ITYPEC	1	Integer	"3"
BNAMEC	2	Alpha	Combined matrix alpha name
LABSC	101	Integer	Parameter label record of combined matrix

INPUT COMMON DEFINITIONS

MNEMONIC	NO. WDS.	FORMAT	CONTENTS
IØPT1	1	Integer	Input check option switch
IØPT2	1	Integer	Program path option switch
IØPT3	1	Integer	Edit Now or Later option switch
MEØRG	1	Integer	Edit original code
MEPAR	1	Integer	Edit parameter set code
MESUP	1	Integer	Edit suppressed code
MERED	1	Integer	Edit reduced code
MEDIC	1	Integer	Edit backsubstitution code
MECØM	1	Integer	Edit combined code
MEINV	1	Integer	Edit inverse code
NCMSUP	1	Integer	Number of parameters to be suppressed in combined matrix
JCMSUP	50	Integer	Parameters to be suppressed in combined matrix
IDIN	1	Integer	Matrix identification number of input matrix
BNAMIN	2	Alpha	Alpha name of input matrix
NBSUP	1	Integer	Number of parameters to be suppressed in input matrix
JBSUP	50	Integer	Parameters to be suppressed in input matrix
NARG	1	Integer	Argument for calling SUPRSS
BLKS	1	Alpha	Alpha blanks
LARC	21	Integer	Legal arc parameter labels, in proper sort
LGRAV	58	Integer	Legal gravity parameter labels, in proper sort
TDAT	6	Alpha	Data for printing arc parameter chart

SECTION IV

SUBROUTINE WRITE-UPS

NAME	MAIN	
PURPOSE	Main control program for SØLVE	
CALLS	BACKSB	Solves the backsubstitution equations
	BEDIT	Writes a matrix to be edited onto tape 30
	CALTYP	Calculates the number of gravity, station and arc parameter labels in an array
	CHECK	Controls page feeding and header on printed output
	CØMB	Performs the matrix combination
	EDIT	Edits all matrices on tape 30 to ØU1
	ELIM	Eliminates parameters from the input matrix
	ERRØR	Handles error exits from SØLVE
	INCK	Checks card and tape input for errors
	INVERT	Control program for matrix inversion
	ØPARC	Print and punch arc parameter output
	ØPGRAV	Print and punch gravity parameter output
	ØPSTAT	Print and punch station parameter output
	SUPRSS	Control program for matrix suppression
OPTIONS	SØLVE	Options are described under Input Cards, page 3.1.

INPUT

Tape 18, the B matrix and parameter set matrix tape.

The input cards described on page 3.1.

OUTPUT

1) Four signal to noise ratios

2) Charts of the original parameter values, the changes and the updated parameter values for the gravity, station and arc parameters

3) Punched cards containing the updated gravity, station and orbital elements parameter set

4) Any desired editing, either on a tape to be printed later or printed

TAPES

Six tapes are used, and all are rewound at the beginning and end of the run

18 Input tape

19, 20, 28, 29 Scratch tapes

30 Edit tape

ERROR CHECKS

Error number seven is produced if a matrix indicated on an input card cannot be found on tape 18

NOTE

No cards are punched for the two special parameters, speed of light and earth-moon separation multiplier.

NAME	BACKSB		
PURPOSE	Solves the backsubstitution equations		
METHOD	The backsubstitution equations are rectangular matrices ($D^{-1}C$) generated during the elimination process, along with their right hand side vector ($D^{-1}\underline{b}_2$). The solution vector (Δp_2) is formed as follows, where Δp_1 is the vector consisting of the solution set for the portion of the matrix not eliminated: $$\Delta p_2 = D^{-1}\underline{b}_2 - D^{-1}C\Delta p_1$$		
CALLED BY	MAIN	Main control program for SØLVE	
CALLS	ERRØR	Handles error exits from SØLVE	
INPUT	B	The known delta-p set; i.e., Δp_1	
	LABSI	The parameter labels for B	
	NRØWI	The number of entries in B	
	PERM	Common area PERM contains the ID and label records of the $D^{-1}C$ matrix	
OUTPUT	BNEW	The new delta-p set; i.e., Δp_2	
	LABSN	The parameter labels for BNEW	
	NRØWN	The number of entries in BNEW	
TAPES	USED	29	Input, backsubstitution matrix
	START	29	At the first 10003 record
	END	29	After the last 10003 record
ERROR CHECKS	Error number 5 indicates a program or system failure		
NOTES	Before the backsubstitution is performed, the parameter labels in LABSI and those in LABS (backsubstitution matrix label record) are compared. If a parameter appears in the backsubstitution matrix and not in the delta-p set, it is suppressed in the matrix. If a parameter appears in the delta-p set and not in the backsubstitution matrix, it is suppressed in the delta-p vector.		

NAME	BEDIT (NØREC, NØTAP, ITYP)	
PURPOSE	Writes a matrix to be edited onto tape 30	
CALLED BY	MAIN	Overall control program for SØLVE
CALLS	ERRØR	Handles error exits from SØLVE
INPUT	NØREC	The number of times a tape must be backspaced to position it at the X0001 (ID) record
	NØTAP	The logical tape number of the input matrix
	ITYP	An integer indicating the desired format for the edited matrix. This is read from input card type three, the edit card.

OUTPUT The matrix, with ITYPE modified, written in standard format on tape 30

TAPES	USED	30	Output, edit tape
		NØTAP	Input, holds the matrix to be edited
	START	30	Before the old -49991 record
		NØTAP	NØREC records past the ID, (X0001) record of the input matrix
	END	30	Before the new -49991 record
		NØTAP	After the last 10003 record

ERROR CHECKS Error number 6 indicates that NØTAP is not 18, 20, 28 or 29

NOTES The code word ITYPE, used by the EDIT program to determine the type of matrix and the edit format, is computed as follows:

ITYPE = 100 * ITYP + ITYPE,

where the old ITYPE is as it appears in the standard matrix.

NAME	CALTYP (LABA, NP)	
PURPOSE	Calculates the number of gravity, station and arc parameter labels in array LABA	
CALLED BY	SUPRSS	Control program for matrix suppression
	MAIN	Overall control program for SØLVE
	UPCØMB	Updates the combined matrix identification and label records
	INCK	Checks formats and values of input
	ØPARC	Prints and punches arc output
	ØPSTAT	Prints and punches station output
INPUT	LABA	Array of parameter labels
	NP	Number of entries in LABA
OUTPUT	NGRAV	Number of gravity labels in LABA
	NSTAT	Number of station labels in LABA
	NARC	Number of arc labels in LABA
NOTES	NGRAV, NSTAT and NARC all appear in common PERM.	

NAME	CHECK (NØLIN)	
PURPOSE	Controls the page feeding and writes the page header for printed output	
CALLED BY	MAIN	Overall control program for SØLVE
	MINV	Matrix inversion routine
	INCK	Checks input format and values
	ØPARC	Prints and punches arc parameter output
	ØPGRAV	Prints and punches gravity parameter output
	ØPSTAT	Prints and punches station parameter output
INPUT	NØLIN	The number of lines to be printed
	LINE	The number of lines which appear on the current page
	ALPHA	A twelve-word array consisting of the page header
	JPAGE	The current page number
OUTPUT	LINE is incremented. If the new LINE is greater than forty-five, a new page is started and JPAGE is incremented.	

NAME	CØMB		
PURPOSE	Performs the matrix combination		
METHOD	"Combination" is basically a matrix addition, with right hand side elements also added. However, the matrices to be added are not necessarily the same size, nor do they necessarily represent the same parameter set. Therefore, the addition is performed on corresponding matrix elements; that is, elements with the same row and column parameter labels. Thus the combined matrix will represent a parameter set consisting of all parameters appearing in the input matrices.		
CALLED BY	MAIN	Overall control program for SØLVE	
CALLS	ERRØR	Processes error exits from SØLVE	
INPUT	The combined matrix ID and label records in common area PERM		
OUTPUT	The combined matrix		
TAPES	USED	20	Input, matrices to be combined
		28	Output, the combined matrix
	START	20 and 28 are rewound	
	END	20	After the new -19991 record
		28	Before the new -19991 record
ERROR CHECKS	Error number 3 occurs if a label match cannot be found between an input matrix and the combined matrix label		
NOTES	The parameters represented in the matrices to be combined must be from the same original parameter set, or the delta-p's are meaningless. Therefore, in a normal SØLVE run, the arc parameters are eliminated before combination and only matrices representing the same gravity and station sets should be combined.		

NAME	EDIT		
PURPOSE	This routine "prints" (i. e., writes on the systems output tape) all matrices on tape 30, in a specified format.		
CALLED BY	MAIN	Overall control program for SOLVE. Edit can also be an independent program.	
CALLS	MINV	Matrix inversion routine.	
OPTIONS	ITYPE	1XX	Print matrix as is; i. e., unnormalized. The rectangular matrices (parameter set matrices and back-substitution matrices) may only be edited in the unnormalized format.
		2XX	Print normalized matrix; i. e., the diagonal elements are set to one; the standard deviation vector is also printed.
		3XX	Print the inverse of the input matrix, with the solution vector as the right hand side.
		4XX	Print the Identification and Label records only; i. e., records X0001 and X0002.
		5XX	Print the normalized inverse matrix. Also print the standard deviation vector; i. e., the square roots of the diagonal elements of the inverse matrix.
INPUT	ITYPE	A three-digit code word in the ID record of the record of the matrix, YXX, where:	
		Y	Specifies the edit format, as indicated on input card type three (see OPTIONS).
		XX	Specifies the type of matrix.

XX =	1	B matrix
	2	Backsubstitution matrix
	3	Combined matrix
	5	Reduced matrix
	6	Inverse combined matrix
	7	Suppressed matrix
	8	Parameter set matrix

OUTPUT The matrices in the described format on the systems output tape.

TAPES			
	USED	30	Input, edit tape
	START	30	Before the -49991 record
	END	30	Rewound

NOTES: The normalization performed is such that if N is the normalized matrix and A the original matrix, the following is true:

$$N_{ij} = \frac{1}{\sqrt{a_{ii}}} \quad a_{ij} \frac{1}{\sqrt{a_{jj}}}$$

The right hand side vector is not changed and the vector $\sqrt{a_{ii}}$ is printed after the matrix.

The edit types normalized, inverse and inverse normalized may only be used with matrices of order 82 or less.

NAME	ELIM (NUMB, CMBLBL)	
PURPOSE	This routine eliminates parameters from the input matrix.	
METHOD	A Gauss-Jordan elimination is performed on those parameters to be eliminated, which must be the last parameters in the matrix. A reduced matrix representing the remaining parameters is produced, along with a backsubstitution matrix for the eliminated parameters.	
CALLED BY	MAIN	Overall control program for SØLVE
CALLS	UPCØMB	Develops combined matrix label record
	ERRØR	Handles error exits from SØLVE
OPTIONS	CMBLBL	If it is greater than zero, subroutine UPCØMB is called. If it is less than one, UPCØMB is not called.
INPUT	NUMB	The number of parameters to be eliminated from the matrix. The last (far right) NUMB parameters are eliminated.
	PERM	Common area PERM contains the matrix ID and Label records, as usual.
OUTPUT	A reduced matrix and a backsubstitution matrix, both on tape.	

TAPES	USED	20	Output, reduced matrix
		28	Input, matrix to be eliminated
		29	Output, backsubstitution matrix
	START	20	Rewound, or before -19991 record
		28	At first 10003 record
		29	Rewound, or before -29991 record

END	20	Before new -19991 record
	28	After last 10003 record
	29	Before new -29991 record

ERROR CHECKS

Error number 1 indicates that a zero or negative pivot element was found during elimination. This means the matrix is either ill conditioned for elimination or is not positive definite.

Error number 2 indicates a program or system error during ELIM.

NAME	ERROR (NERR)	
PURPOSE	Handles error exits from SØLVE	
CALLED BY	MAIN	Main control routine for SØLVE
	BACKSB	Backsubstitution routine
	BEDIT	Writes matrices to the Edit tape
	CØMB	Matrix combination routine
	ELIM	Matrix elimination routine
	ØPARC	Prints and punches arc parameter output
	INCK	Checks input format and values
INPUT	NERR	Error number
	PERM	The matrix ID and label records are in PERM common, as usual

OUTPUT The following messages are printed:

JOB TERMINATED DUE TO ERROR NUMBER XXXX.

IDENT	NRØWS	NCØLS	BNAME	TYPE
XXXXX	XXXXX	XXXXX	Alpha	X

The "XXXXX" are the appropriate numbers.

NAME	INCK (M)	
PURPOSE	Checks the card and tape input to SØLVE for various errors	
CALLED BY	MAIN	Main control program for SØLVE
CALLS	CALTYP	Calculates the number of gravity, station and arcs
	CHECK	Controls the page feeding on printed output
	ERRØR	Handles error exits from SØLVE
OPTIONS	M	Indicates the particular input to be checked: M = 0, check input tape M = 2, check Options Card, card type two M = 3, check Edit Card, card type three M = 4, check Combined Matrix Card, card type four M = 5, check Combined Matrix Suppression List, card type five M = 6, check B Matrix Card, card type six M = 7, check B Matrix Suppression List, card type seven
INPUT	INPUT	Common contains all quantities read from the input cards.
	Tape 18 is the input tape.	
OUTPUT	If an error is found which would cause SØLVE to function incorrectly, ERRØR is called and the job terminated. If a correctable error is found, a message is written, the item corrected, and the run continues. If no errors are found, no action is taken.	

TAPES	USED	18	Input if M = 0
	START	18	Rewound
	END	18	Rewound

ERROR CHECKS

For a list of the error checks made by INCK and the action taken for non-fatal errors, please see Error Checks, page 3.10.

NAME	INVERT (IEDIT)	
PURPOSE	Control routine for matrix inversion	
CALLED BY	MAIN	Main control program for SØLVE
CALLS	MINV	The subroutine which actually inverts a matrix
OPTIONS	IEDIT	If it is greater than zero, the inverse matrix is to be edited and is written on tape 30. If it is zero or negative, the matrix is not edited.
INPUT	SIGTØN	Signal to noise ratio
	PERM	Common contains the ID and Label records of the matrix to be inverted.
OUTPUT	Updated SIGTØN	
	Delta-p set, that is, the solution vector in array B in common area PERM, and the parameter labels for it in array LABSI.	

TAPES	USED	28	Input, matrix to be inverted
		30	Output, edit tape
	START	28	Before the first 10003 record
		30	Before the -49991 record
	END	28	After the last 10003 record
		30	Before the new -49991 record.

NAME	LBLSUP (JSUALL, NSUALL)	
PURPOSE	Sets to zero the labels in array LABS corresponding to parameters to be suppressed	
CALLED BY	SUPRSS	Control program for suppression
INPUT	JSUALL	An array of up to 50 entries, consisting of parameter labels or code labels to be suppressed
	NSUALL	The number of entries in JSUALL
	LABS	Matrix label record
	NCØL	Number of entries plus one in LABS
	NGRAV	Number of gravity parameter labels
	NSTAT	Number of station parameter labels
OUTPUT	LABS	Matrix label record, with zeros inserted

NOTES

1. For an explanation of parameter code labels, see Parameter Labels, page 3.7.

2. If a parameter label to be suppressed does not appear in array LABS, no action is taken and the routine continues normally.

NAME	MATSUP		
PURPOSE	Deletes matrix rows and columns and writes the suppressed matrix data records on tape 28		
METHOD	The rows and columns corresponding to the various parameters to be suppressed are deleted. The remaining rows and columns, condensed to a square matrix, form the suppressed matrix.		
CALLED BY	SUPRSS	Control program for matrix suppression	
INPUT	LABS	Parameter label record, with zeros substituted for the original label of the various parameters to be suppressed	
	NCØL	The number of elements in an original matrix data row, including the right hand side	
OUTPUT	The suppressed matrix data rows, written on tape 28		
TAPES	USED	18	Input, original B-matrix data rows
		28	Output, suppressed matrix data rows
	START	18	Before first 10003 record
		28	After the 10002 record
	END	18	After the last 10003 record
		28	After the last 10003 record

NAME	MINV (N)	
PURPOSE	Inverts and solves a matrix	
METHOD	A Gauss-Jordan elimination, with a pivot search on the diagonal elements	
CALLED BY	INVR	Control program for matrix inversion
	EDIT	Edits matrices for printing
CALLS	CHECK	Controls page spacing of printed output
INPUT	N	Order of matrix, not to exceed 82
	A	Two-dimensional array containing the matrix to be inverted
	B	The Right Hand Side vector
OUTPUT	A	Inverted matrix
	B	The Solution vector
ERROR CHECKS	If a pivot element is found which is negative or zero, a message is printed indicating that the matrix is not positive definite and in which row the bad pivot occurred. However, the run continues.	

NAME	ØPARC (VEC, LAB, NP, ID)		
PURPOSE	Print and punch arc parameter output		
CALLED BY	MAIN	Overall control program for SØLVE	
CALLS	CALTYP	Calculates number of gravity, station or arc parameters	
	CHECK	Controls page feeding on printed output	
	ERROR	Error exit from SØLVE	
INPUT	VEC	Delta-p set of arc parameters for this matrix	
	LAB	Label set corresponding to VEC	
	NP	The number of elements in VEC	
	ID	Matrix identification number for the matrix whose arc parameters are being processed	
	Tape 19 contains the parameter set matrix for matrix ID.		
OUTPUT	A chart of original parameter values, computed change, and the updated parameter values.		
	Punched cards containing the updated parameter set, to be used as input to the integration system.		
TAPES	USED	19	Input, parameter set matrices
	START	19	Positioned at any type 10011 record or at the -19991 record
	END	19	After the 10013 record
ERROR CHECKS	Error number eight indicates that the parameter set for matrix ID was not found on tape 19		
NOTES	If all arc parameters in a matrix are suppressed, no printed or punched output will be generated for that matrix.		

NAME	ØPGRAV (VEC, LAB, NP)		
PURPOSE	Print and punch gravity parameter output		
CALLED BY	MAIN	Overall control program for SØLVE	
CALLS	CHECK	Controls page feeding and header on printed output	
INPUT	VEC	Delta-p set of gravity parameters for this run	
	LAB	Label set corresponding to VEC	
	NP	Number of entries in VEC	
	Tape 19 contains the parameter set matrices		
OUTPUT	A chart of original parameter values, computed changes, and the updated parameter value		
	Punched cards containing the updated parameter set, to be used as input to the integration system.		
TAPES	USED	19	Input, parameter set matrices
	START	19	Not positioned
	END	19	After the 10013 record of the last parameter set matrix
NOTES	If all gravity parameters in this run have been suppressed, no printed or punched output will be generated for this run.		

NAME	ØPSTAT(VEC, LAB, NP)	
PURPOSE	Print and punch station parameter output	
CALLED BY	MAIN	Overall control program for SØLVE
CALLS	CALTYP	Calculates the number of gravity, station and arc parameters
	CHECK	Controls page feed and header printing
INPUT	VEC	Delta-p set of station parameters for this run
	LAB	Label set corresponding to VEC
	NP	Number of entries in VEC
	Tape 19 contains the parameter set matrices	
OUTPUT	A chart of original parameter values, computed change, and the updated parameter values in spherical co-ordinates.	
	Punched cards containing the updated parameter set, to be used as input to the Normal Equations system.	
TAPES	USED	19 Input, parameter set matrices
	START	19 Not positioned
	END	19 Before the -19991 record
NOTES	If all station parameters in the run have been suppressed, no printed or punched output will be generated for that run.	

NAME	SUPRSS (JSUALL, NSUALL)	
PURPOSE	Control program for matrix suppression	
CALLED BY	MAIN	Overall control program for SØLVE
CALLS	CALTYP	Calculates number of gravity, station and arc parameters in original matrix
	LBLSUP	Sets to zero the labels in array LABS corresponding to parameters to be suppressed
	MATSUP	Deletes matrix row and column of the parameters to be suppressed
OPTIONS	NSUALL=0	No parameters to be suppressed for this matrix; the matrix is transferred from tape 18 to tape 28, with revised ITYPE
INPUT	JSUALL	An array of up to 50 entries, consisting of parameter labels or code labels to be suppressed
	NSUALL	The number of entries in JSUALL
	PERM	Common area PERM contains the matrix identification and label record
OUTPUT	1. Suppressed matrix	
	2. Parameter set matrix	

TAPES	USED	18	Input, original B-matrix
		19	Temporary parameter set tape
		28	Output, suppressed matrix
	START	18	Before first 10003 record, input matrix
		19	Rewound, or before -39991 record
		28	Rewound, or before -19991 record
	END	18	After last 10003 record, input matrix
		19	Before new -39991 record
		23	Before new -19991 record

NAME	UPCØMB	
PURPOSE	Develops the combined matrix ID and label records, in common area PERM	
CALLED BY	ELIM	Elimination routine
CALLS	CALTYP	Calculates the number of gravity, station and arc parameters in a matrix
INPUT	SIGTØN	Current signal-to-noise ratio
	ID and label records to be used to update the combined ID and label records	
OUTPUT	Updated SIGTØN	
	Updated ID and label records for the combined matrix	
NOTES	UPCØMB should be called by the subroutine which generates the matrices to be combined. In a normal SØLVE run, this subroutine is ELIM.	

SECTION V

FLOW CHARTS

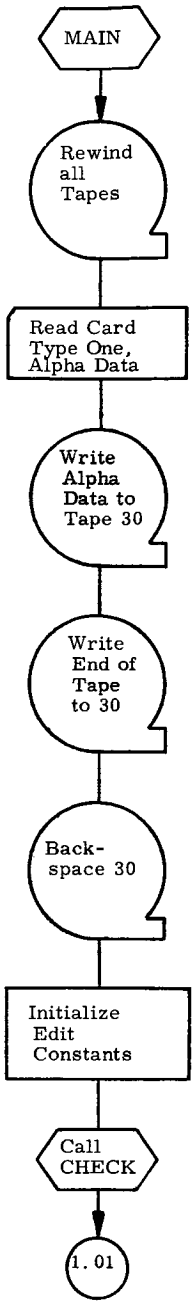
MAIN
Rewind all Tapes
Read Card Type One, Alpha Data
Write Alpha Data to Tape 30
Write End of Tape to 30
Back-space 30
Initialize Edit Constants
Call CHECK
1.01

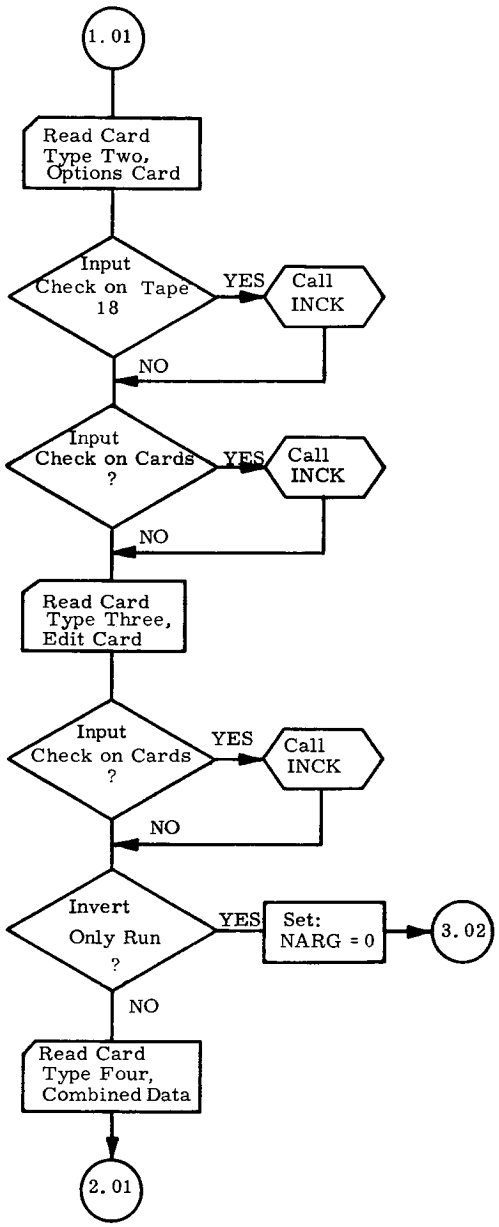
1.01
Read Card Type Two, Options Card
Input Check on Tape 18
YES
Call INCK
NO
Input Check on Cards ?
YES
Call INCK
NO
Read Card Type Three, Edit Card
Input Check on Cards ?
YES
Call INCK
NO
Invert Only Run ?
YES
Set: NARG = 0
3.02
NO
Read Card Type Four, Combined Data
2.01

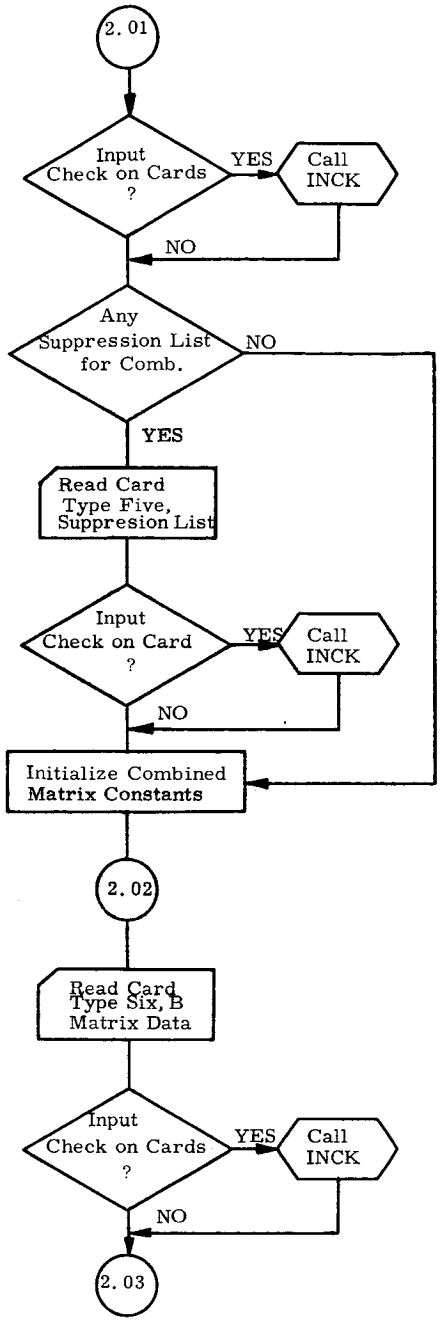
2.01
Input Check on Cards ?
YES
Call INCK
NO
Any Suppression List for Comb.
NO
YES
Read Card Type Five, Suppresion List
Input Check on Card ?
YES
Call INCK
NO
Initialize Combined Matrix Constants
2.02
Read Card Type Six, B Matrix Data
Input Check on Cards ?
YES
Call INCK
NO
2.03

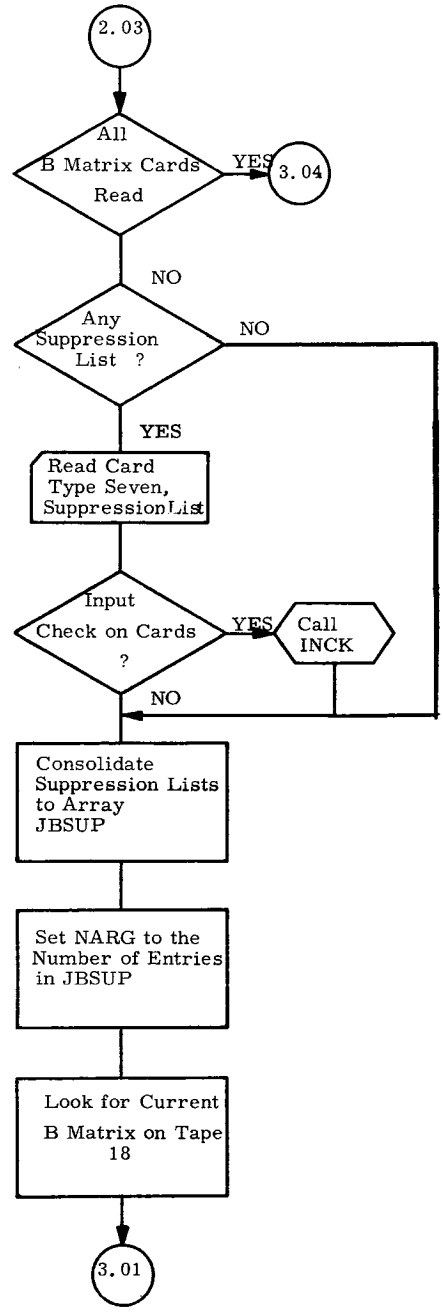
2.03
All B Matrix Cards Read
YES
3.04
NO
Any Suppression List ?
NO
YES
Read Card Type Seven, Suppression List
Input Check on Cards ?
YES
Call INCK
NO
Consolidate Suppression Lists to Array JBSUP
Set NARG to the Number of Entries in JBSUP
Look for Current B Matrix on Tape 18
3.01

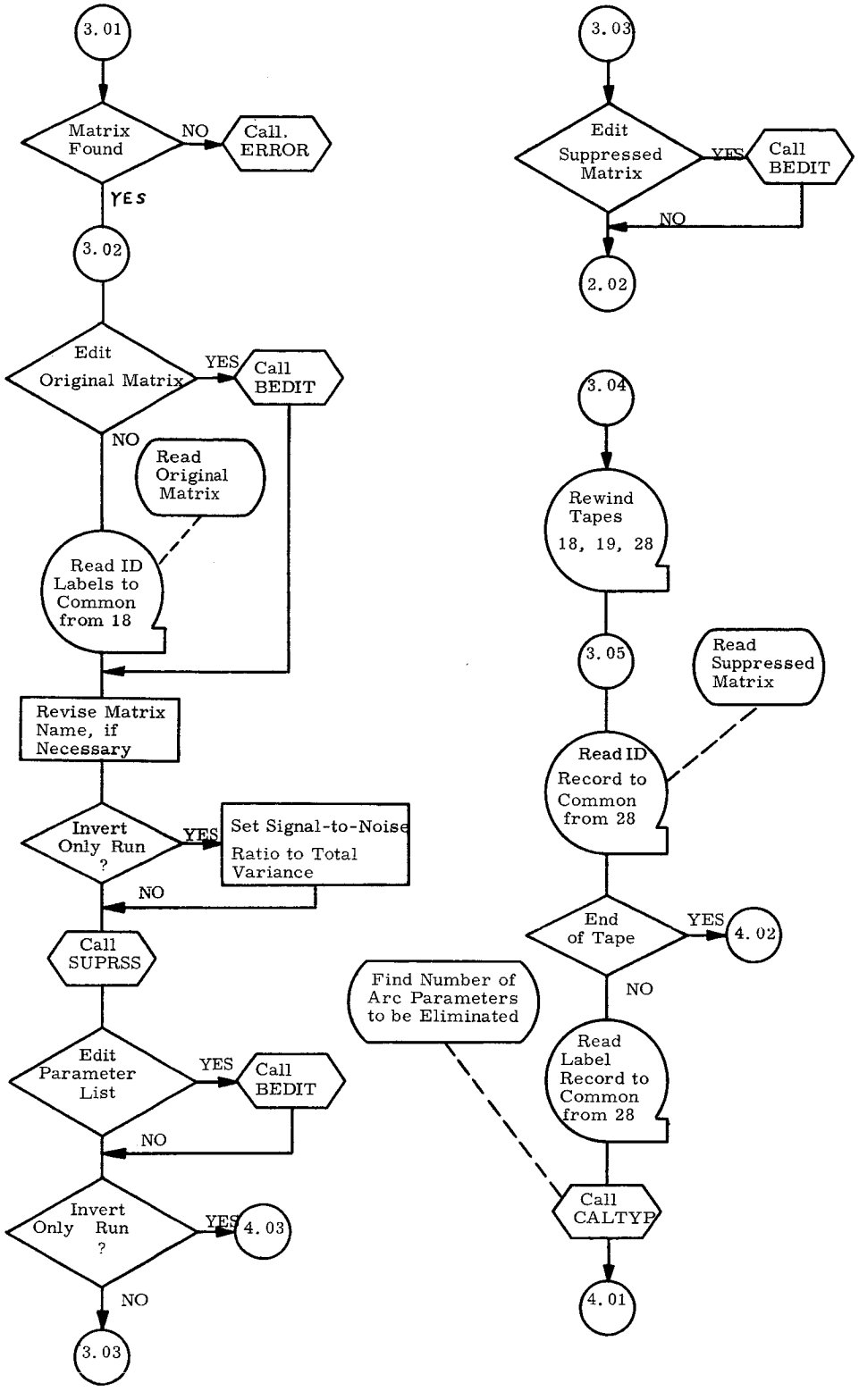
3.01
Matrix Found
NO
Call. ERROR
YES
3.02
Edit Original Matrix
YES
Call BEDIT
NO
Read Original Matrix
Read ID Labels to Common from 18
Revise Matrix Name, if Necessary
Invert Only Run ?
YES
Set Signal-to-Noise Ratio to Total Variance
NO
Call SUPRSS
Edit Parameter List
YES
Call BEDIT
NO
Invert Only Run ?
YES
4.03
NO
3.03
3.03
Edit Suppressed Matrix
YES
Call BEDIT
NO
2.02
3.04
Rewind Tapes 18, 19, 28
3.05
Read Suppressed Matrix
Read ID Record to Common from 28
End of Tape
YES
4.02
NO
Find Number of Arc Parameters to be Eliminated
Read Label Record to Common from 28
Call CALTYP
4.01

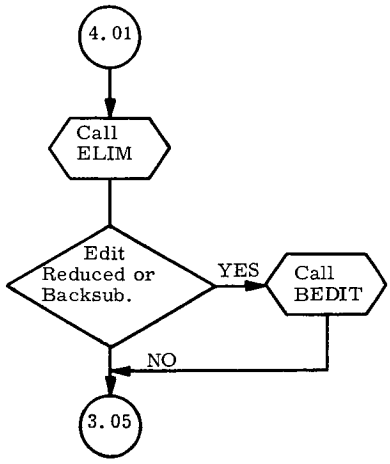
4.01
Call ELIM
Edit Reduced or Backsub.
YES
Call BEDIT
NO
3.05

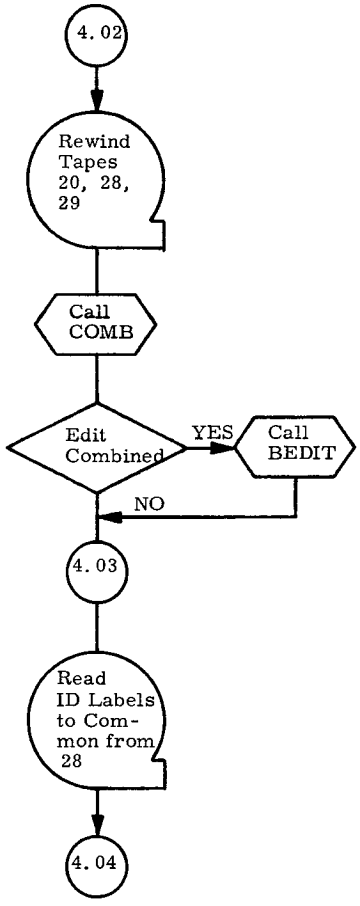
4.02
Rewind Tapes 20, 28, 29
Call COMB
Edit Combined
YES
Call BEDIT
NO
4.03
Read ID Labels to Common from 28
4.04

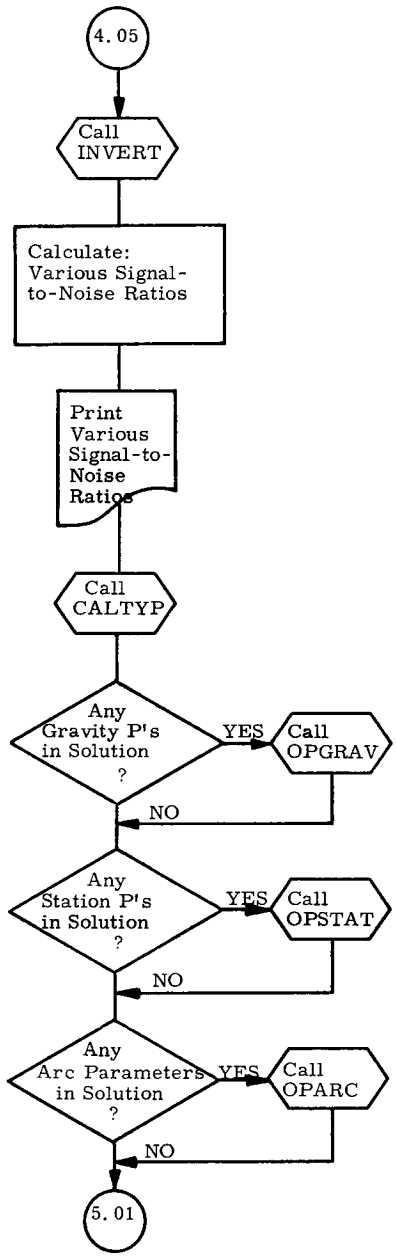
4.05
Call INVERT
Calculate: Various Signal-to-Noise Ratios
Print Various Signal-to-Noise Ratios
Call CALTYP
Any Gravity P's in Solution ?
YES
Call OPGRAV
NO
Any Station P's in Solution ?
YES
Call OPSTAT
NO
Any Arc Parameters in Solution ?
YES
Call OPARC
NO
5.01

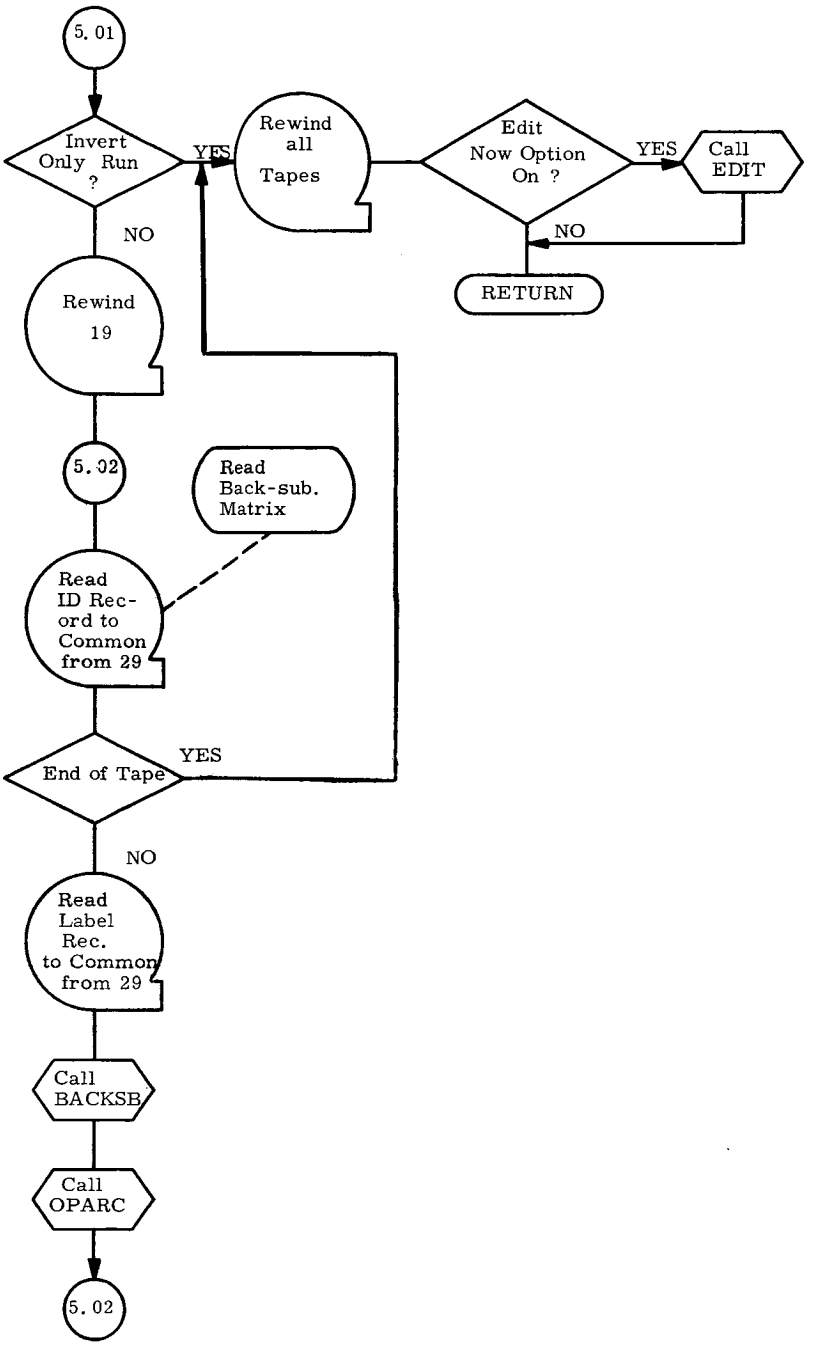
5.01
Invert Only Run ?
YES
NO
Rewind all Tapes
Edit Now Option On ?
YES
Call EDIT
NO
RETURN
Rewind 19
5.02
Read Back-sub. Matrix
Read ID Record to Common from 29
End of Tape
YES
NO
Read Label Rec. to Common from 29
Call BACKSB
Call OPARC
5.02

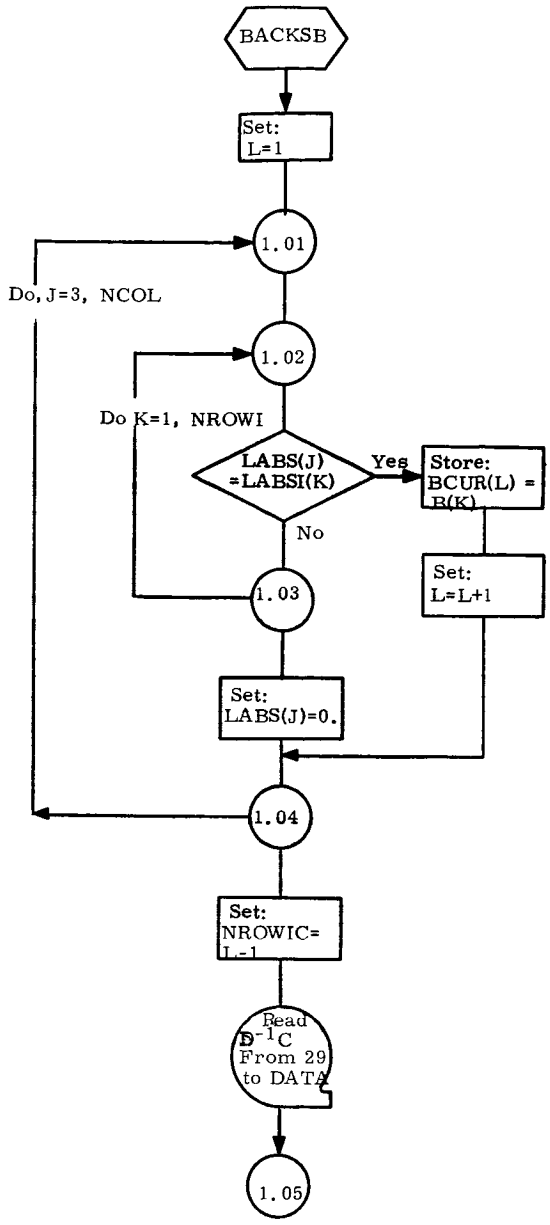
BACKSB
Set:
L=1
1.01
Do, J=3, NCOL
1.02
Do K=1, NROWI
LABS(J)
=LABSI(K)
Yes
Store:
BCUR(L) =
B(K)
No
Set:
L=L+1
1.03
Set:
LABS(J)=0.
1.04
Set:
NROWIC=
L-1
Read
D-1C
From 29
to DATA
1.05

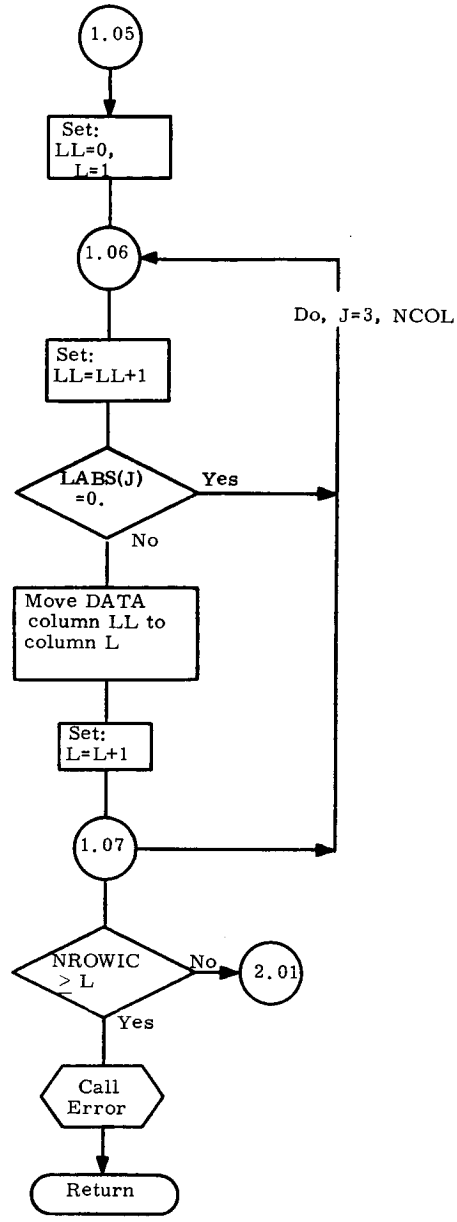
1.05
Set:
LL=0,
L=1
1.06
Do, J=3, NCOL
Set:
LL=LL+1
LABS(J)
=0.
Yes
No
Move DATA
column LL to
column L
Set:
L=L+1
1.07
NROWIC
≥ L
No
2.01
Yes
Call
Error
Return

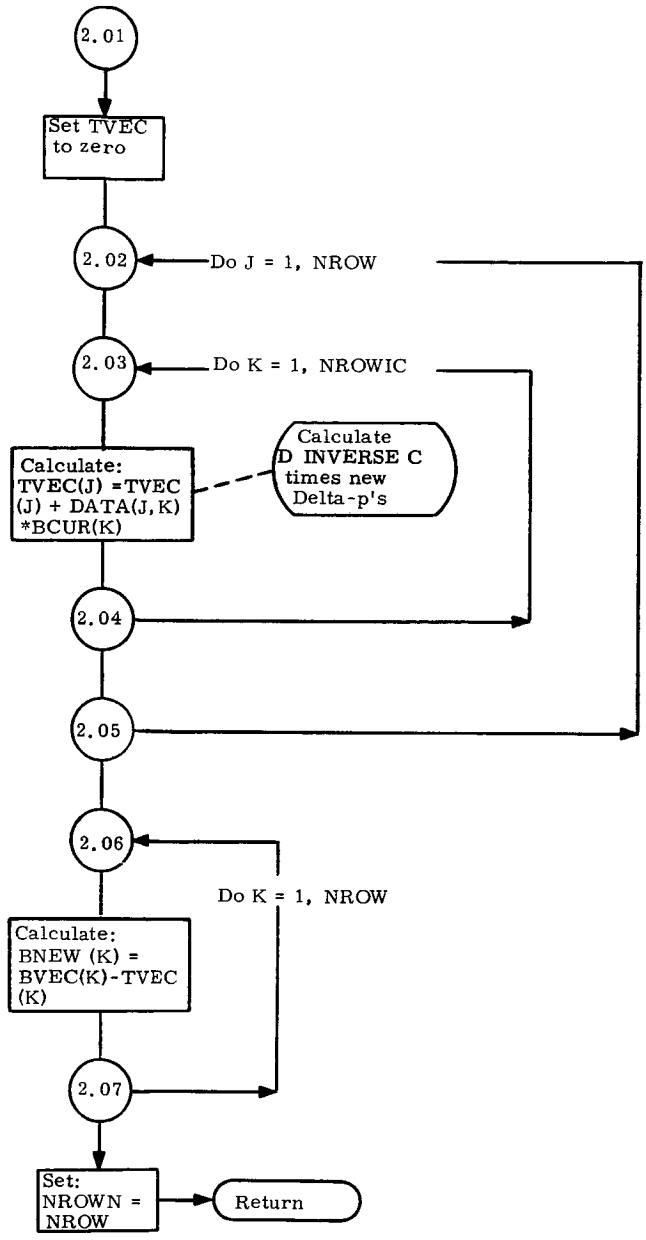
2.01
Set TVEC to zero
2.02
Do J = 1, NROW
2.03
Do K = 1, NROWIC
Calculate: TVEC(J) =TVEC (J) + DATA(J,K) *BCUR(K)
Calculate D INVERSE C times new Delta-p's
2.04
2.05
2.06
Do K = 1, NROW
Calculate: BNEW (K) = BVEC(K)-TVEC (K)
2.07
Set: NROWN = NROW
Return

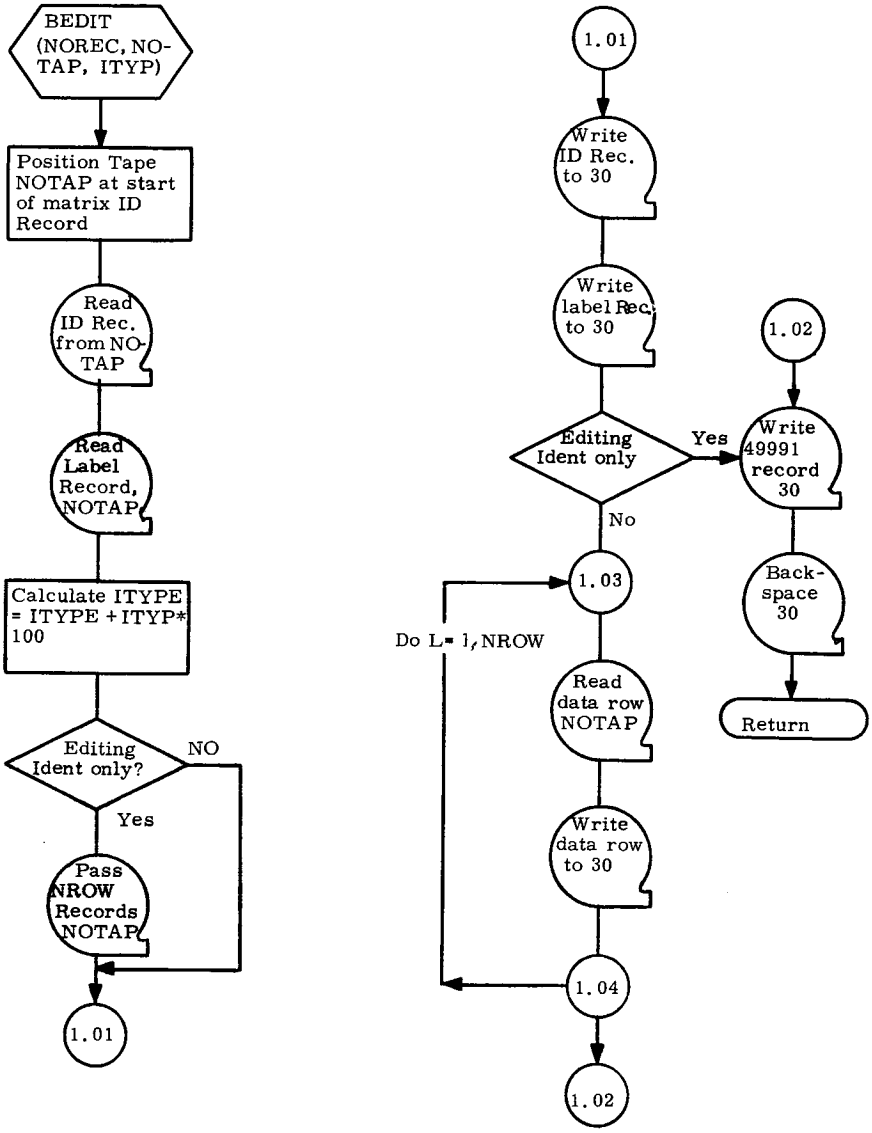
BEDIT (NOREC, NO-TAP, ITYP)
Position Tape NOTAP at start of matrix ID Record
Read ID Rec. from NO-TAP
Read Label Record, NOTAP
Calculate ITYPE = ITYPE + ITYP* 100
Editing Ident only?
NO
Yes
Pass NROW Records NOTAP
1.01
1.01
Write ID Rec. to 30
Write label Rec. to 30
Editing Ident only
Yes
No
1.02
Write 49991 record 30
Back-space 30
Return
1.03
Do L= 1, NROW
Read data row NOTAP
Write data row to 30
1.04
1.02

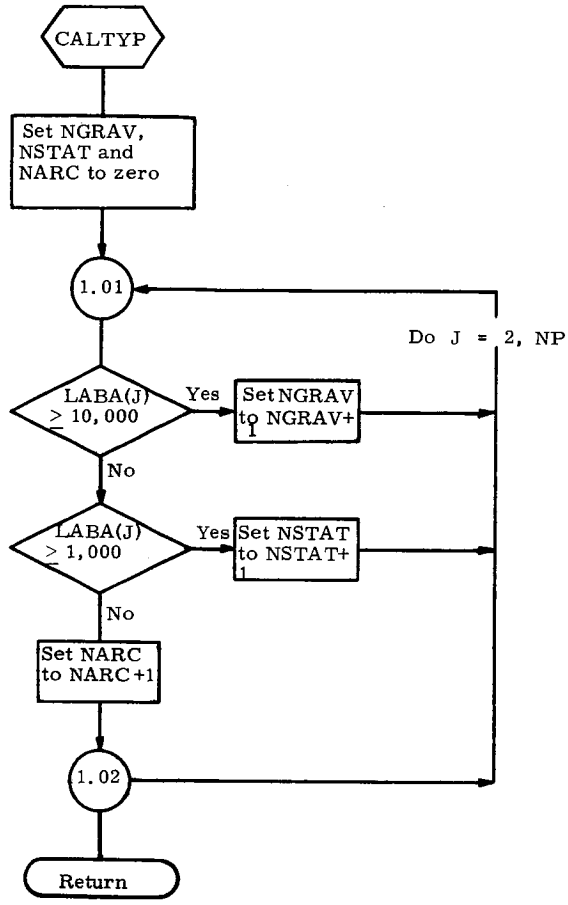
CALTYP
Set NGRAV, NSTAT and NARC to zero
1.01
Do J = 2, NP
LABA(J) ≥ 10,000
Yes
Set NGRAV to NGRAV+1
No
LABA(J) ≥ 1,000
Yes
Set NSTAT to NSTAT+1
No
Set NARC to NARC+1
1.02
Return

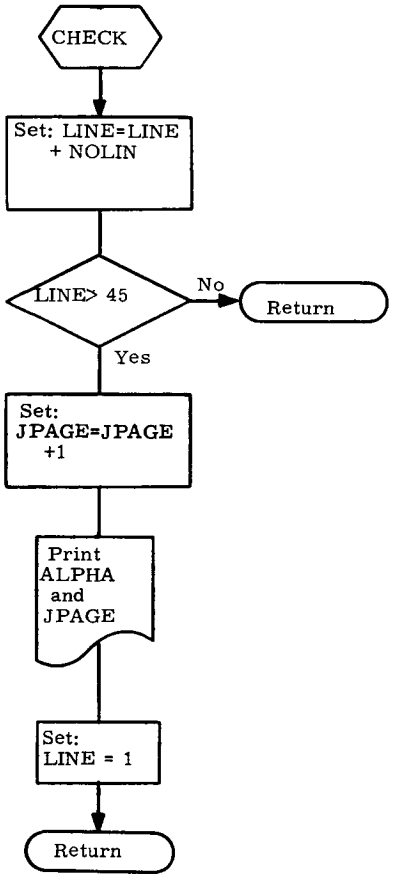
CHECK
Set: LINE=LINE + NOLIN
LINE> 45
No
Return
Yes
Set: JPAGE=JPAGE +1
Print ALPHA and JPAGE
Set: LINE = 1
Return

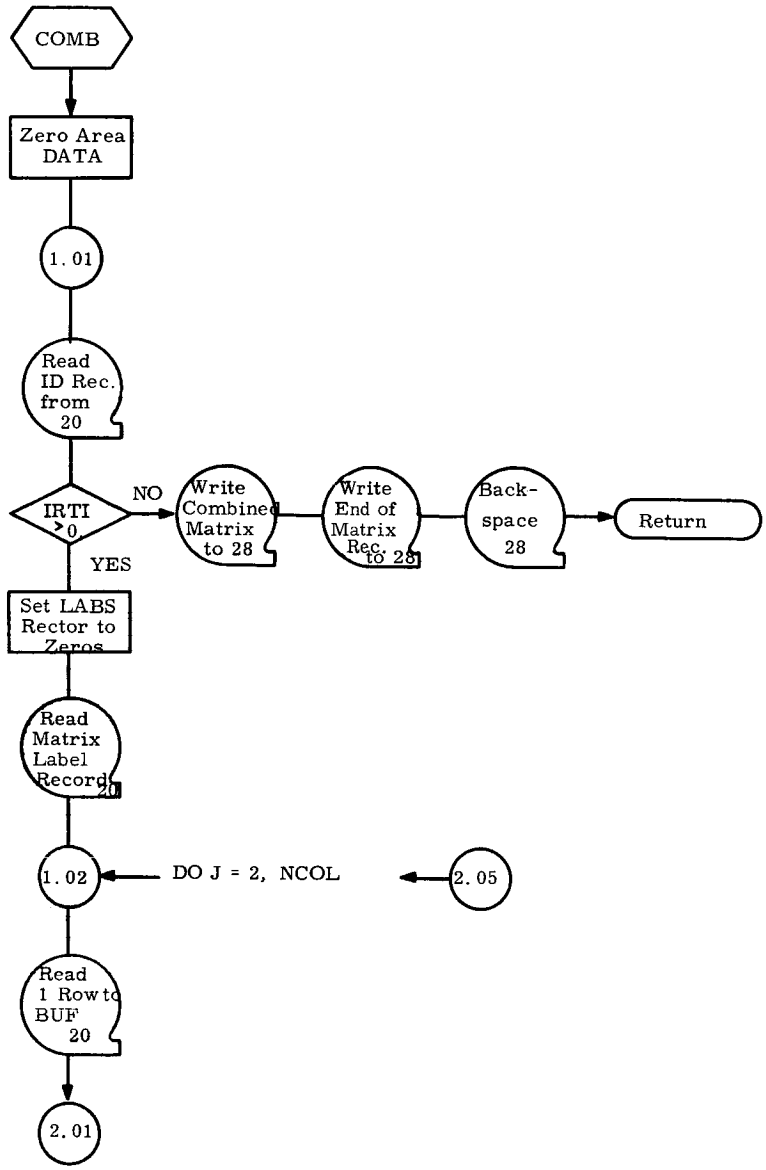
COMB
Zero Area DATA
1.01
Read ID Rec. from 20
IRTI > 0
NO
YES
Write Combined Matrix to 28
Write End of Matrix Rec. to 28
Back-space 28
Return
Set LABS Rector to Zeros
Read Matrix Label Record 20
1.02
DO J = 2, NCOL
2.05
Read 1 Row to BUF 20
2.01

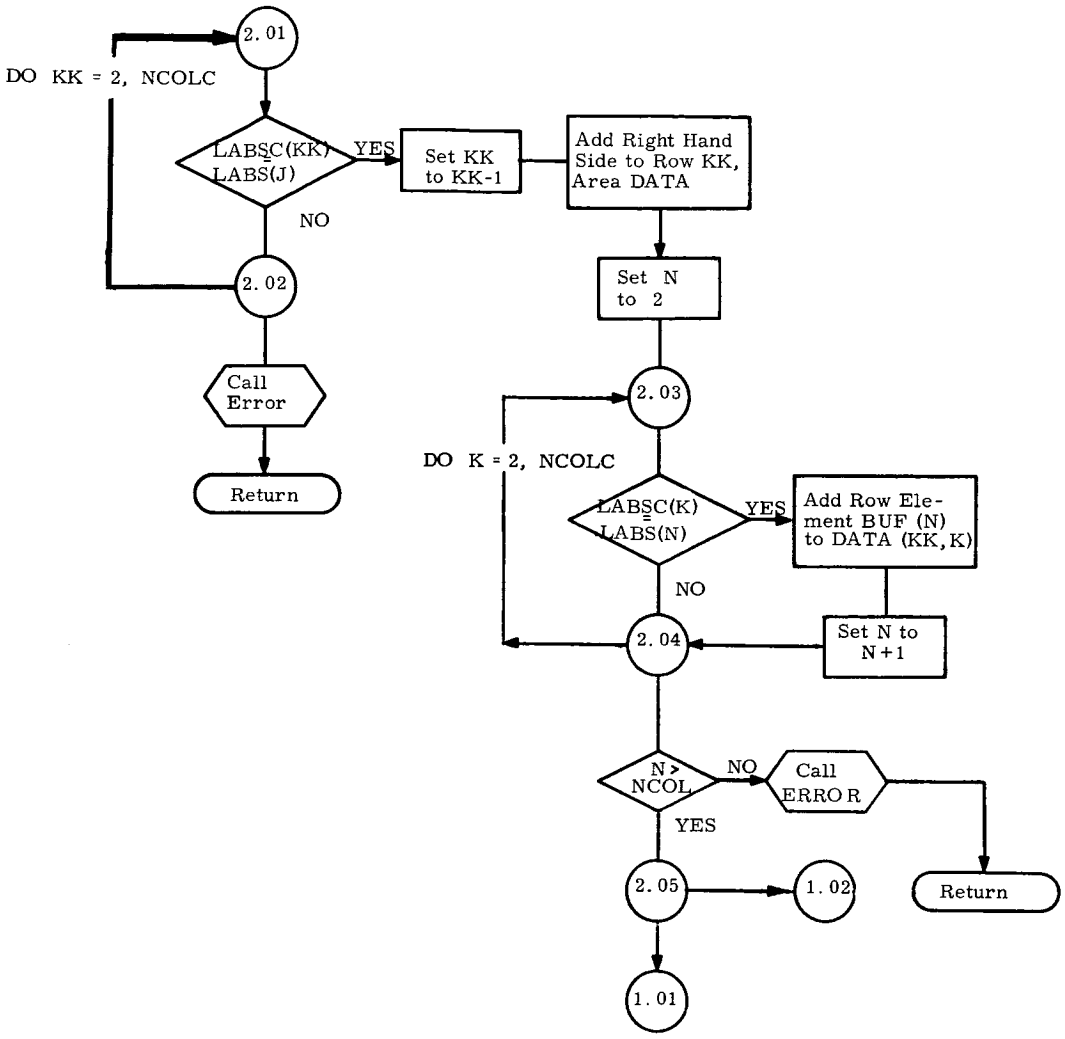
2.01
DO KK = 2, NCOLC
LABSC(KK) ≥ LABS(J)
YES
Set KK to KK-1
Add Right Hand Side to Row KK, Area DATA
NO
2.02
Set N to 2
Call Error
2.03
Return
DO K = 2, NCOLC
LABSC(K) ≥ LABS(N)
YES
Add Row Element BUF (N) to DATA (KK, K)
NO
2.04
Set N to N+1
N > NCOL
NO
Call ERROR
YES
2.05
1.02
Return
1.01

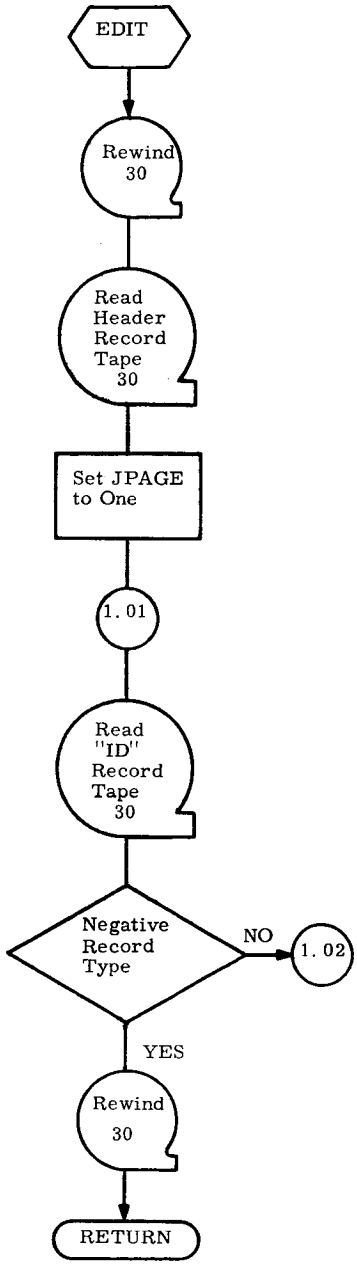
EDIT
Rewind 30
Read Header Record Tape 30
Set JPAGE to One
1.01
Read "ID" Record Tape 30
Negative Record Type
NO
1.02
YES
Rewind 30
RETURN

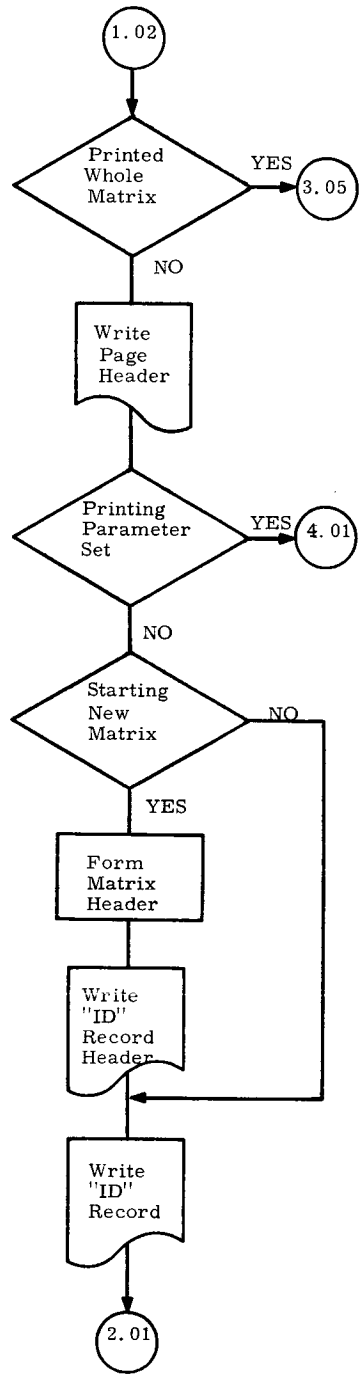
1.02
Printed Whole Matrix
YES
3.05
NO
Write Page Header
Printing Parameter Set
YES
4.01
NO
Starting New Matrix
NO
YES
Form Matrix Header
Write "ID" Record Header
Write "ID" Record
2.01

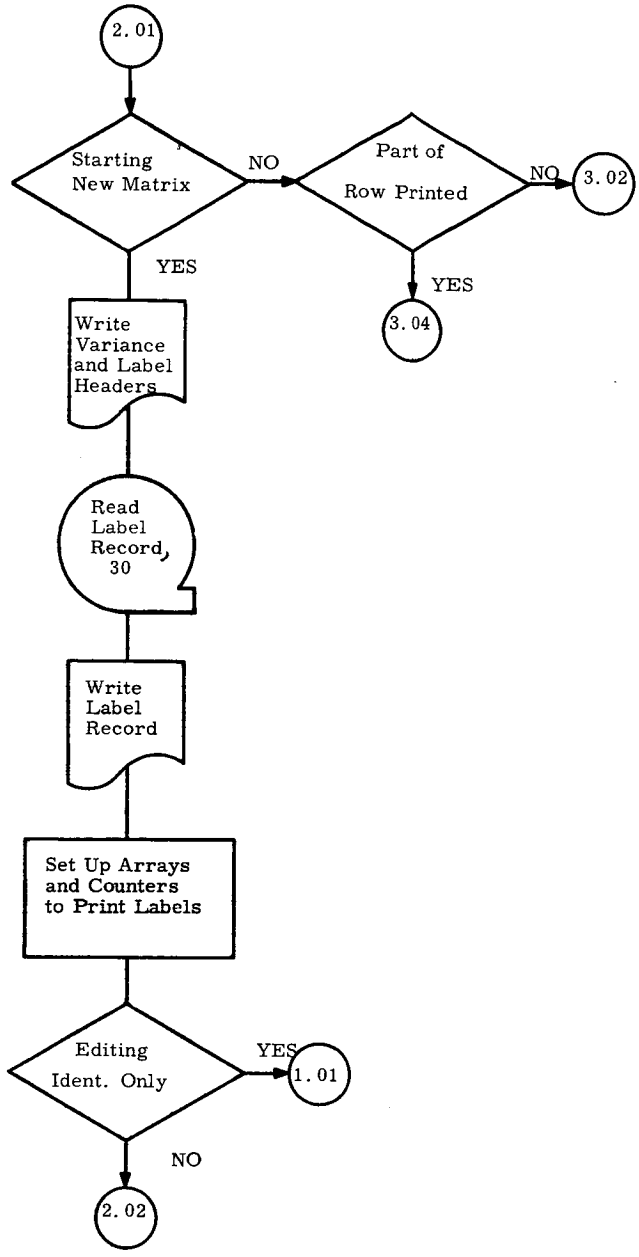
2.01
Starting New Matrix
NO
Part of Row Printed
NO
3.02
YES
YES
3.04
Write Variance and Label Headers
Read Label Record, 30
Write Label Record
Set Up Arrays and Counters to Print Labels
Editing Ident. Only
YES
1.01
NO
2.02

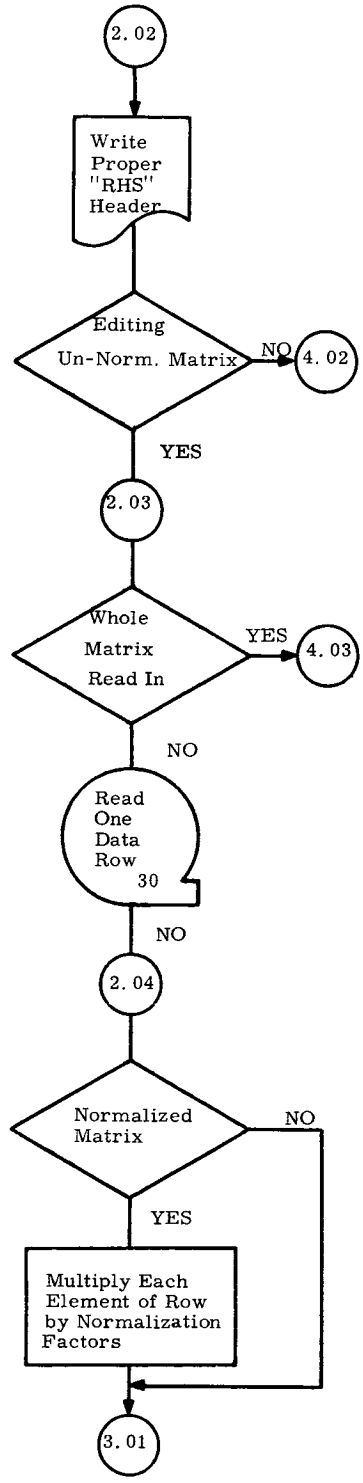
2.02
Write Proper "RHS" Header
Editing Un-Norm. Matrix
NO
4.02
YES
2.03
Whole Matrix Read In
YES
4.03
NO
Read One Data Row 30
NO
2.04
Normalized Matrix
NO
YES
Multiply Each Element of Row by Normalization Factors
3.01

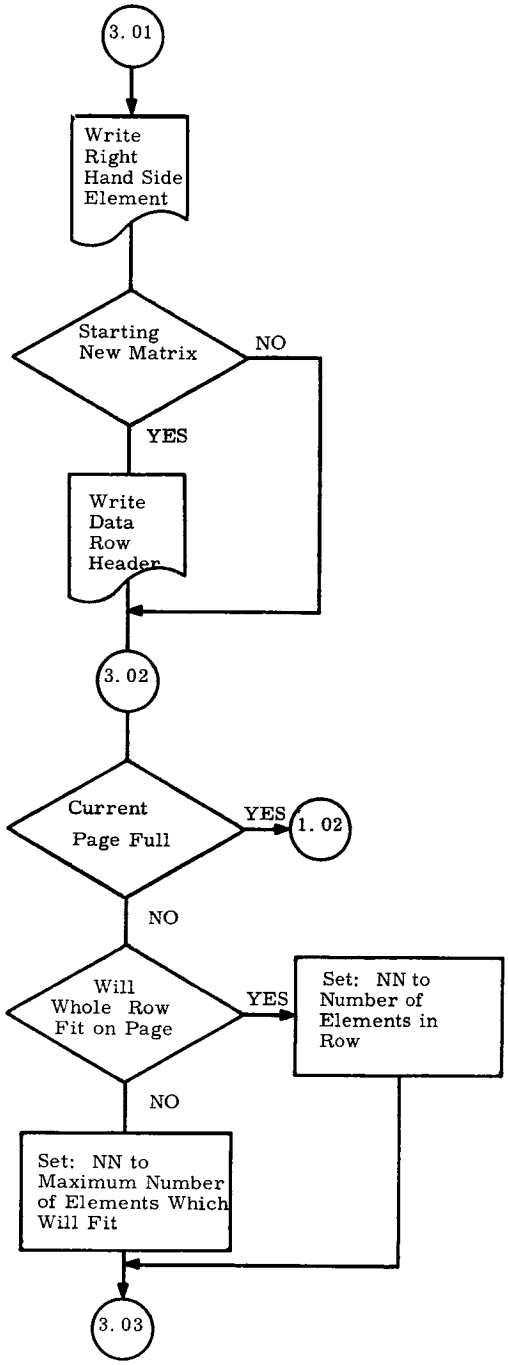
3.01
Write Right Hand Side Element
Starting New Matrix
NO
YES
Write Data Row Header
3.02
Current Page Full
YES
1.02
NO
Will Whole Row Fit on Page
YES
Set: NN to Number of Elements in Row
NO
Set: NN to Maximum Number of Elements Which Will Fit
3.03

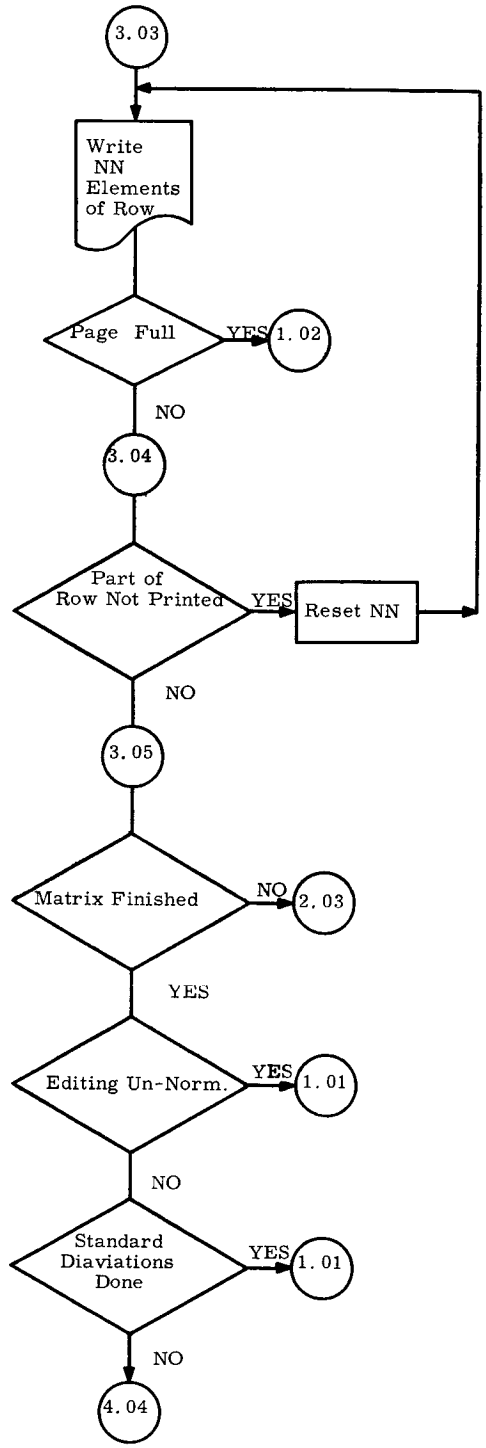
3.03
Write NN Elements of Row
Page Full
YES
1.02
NO
3.04
Part of Row Not Printed
YES
Reset NN
NO
3.05
Matrix Finished
NO
2.03
YES
Editing Un-Norm.
YES
1.01
NO
Standard Diaviations Done
YES
1.01
NO
4.04

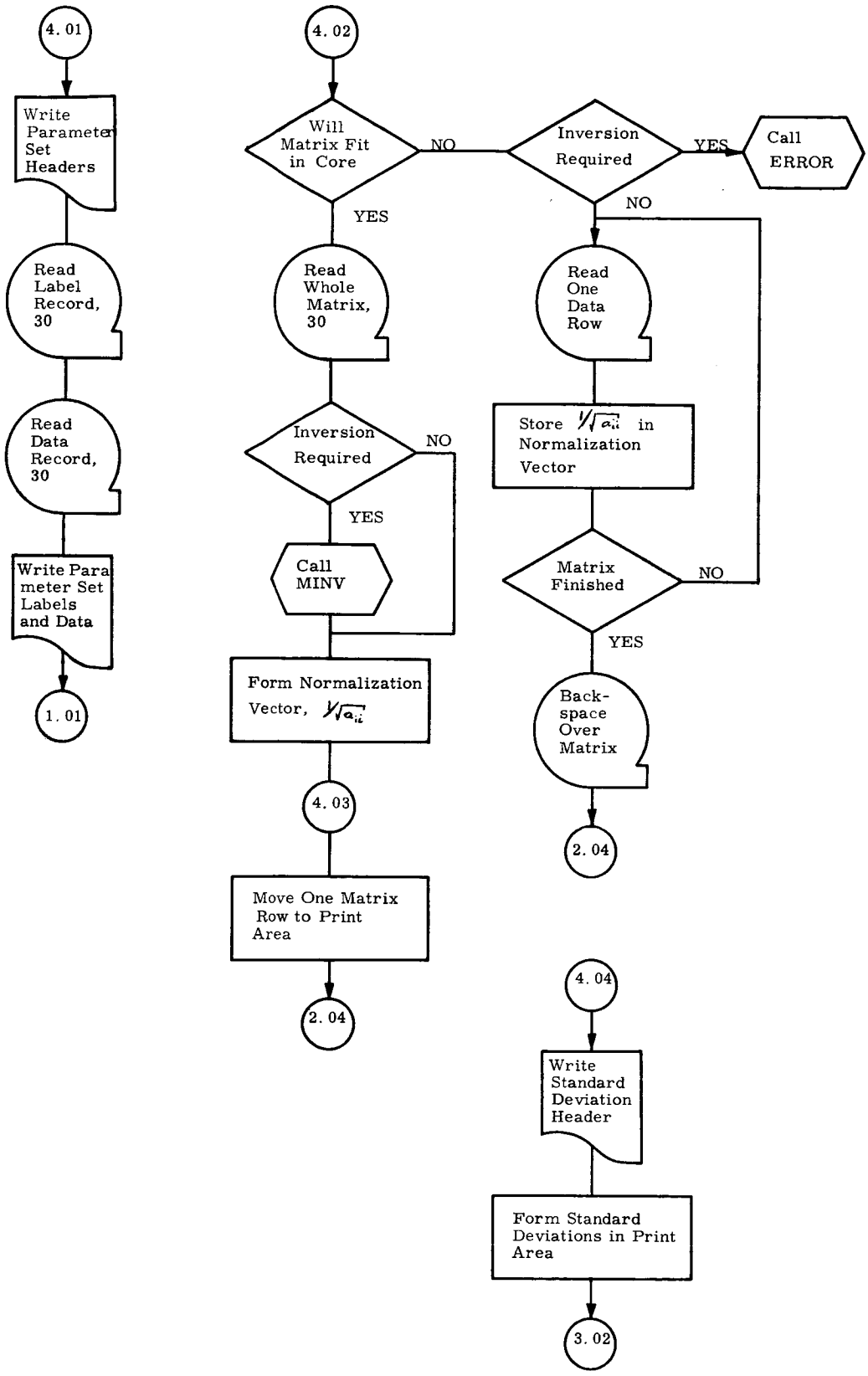
4.01
Write Parameter Set Headers
Read Label Record, 30
Read Data Record, 30
Write Parameter Set Labels and Data
1.01
4.02
Will Matrix Fit in Core
NO
YES
Inversion Required
YES
Call ERROR
NO
Read Whole Matrix, 30
Read One Data Row
Inversion Required
NO
YES
Call MINV
Store $1/\sqrt{a_{ii}}$ in Normalization Vector
Matrix Finished
NO
YES
Form Normalization Vector, $1/\sqrt{a_{ii}}$
Back-space Over Matrix
2.04
4.03
Move One Matrix Row to Print Area
2.04
4.04
Write Standard Deviation Header
Form Standard Deviations in Print Area
3.02

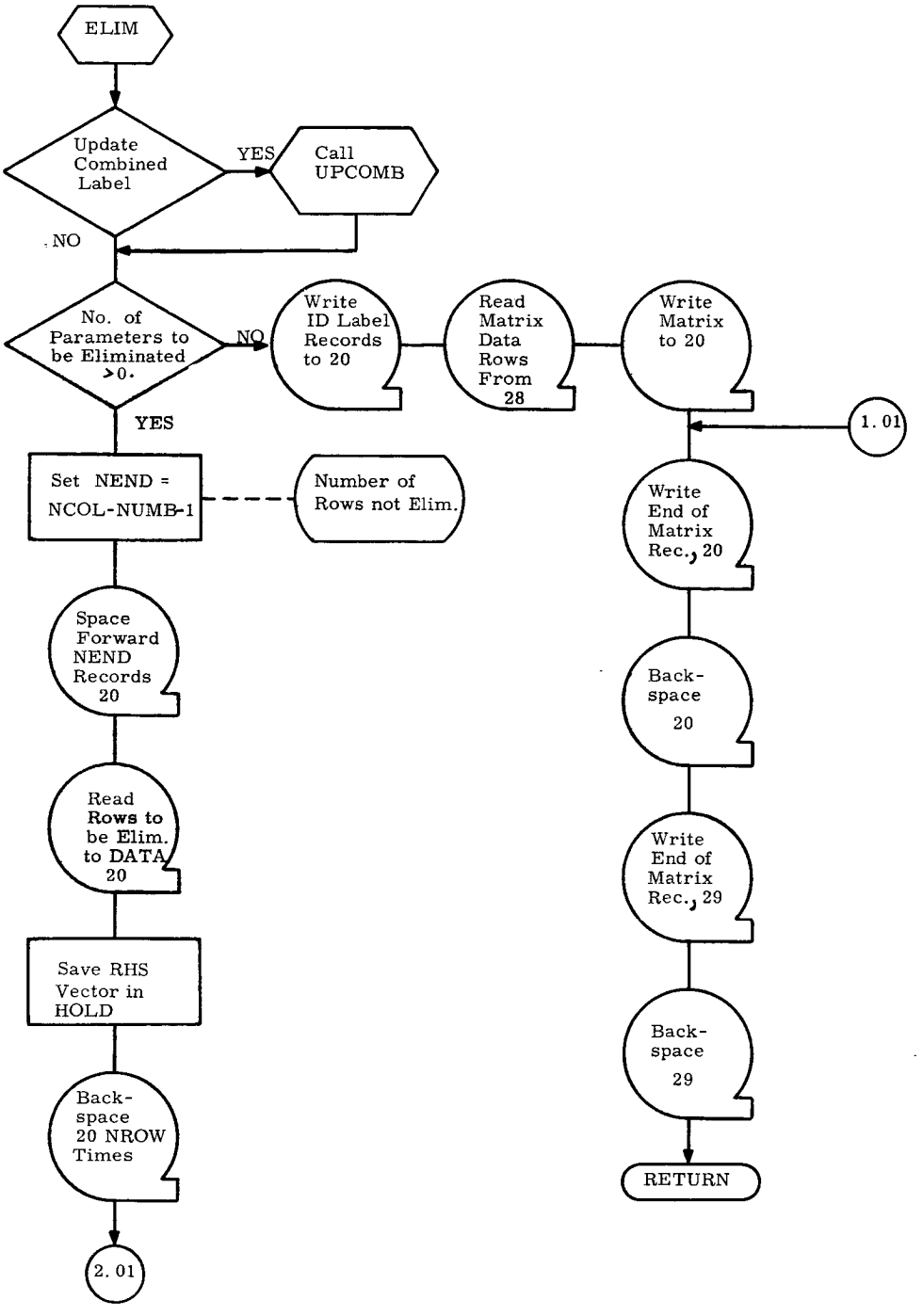
ELIM
Update Combined Label
YES
Call UPCOMB
NO
No. of Parameters to be Eliminated >0.
NO
Write ID Label Records to 20
Read Matrix Data Rows From 28
Write Matrix to 20
1.01
YES
Set NEND = NCOL-NUMB-1
Number of Rows not Elim.
Write End of Matrix Rec., 20
Space Forward NEND Records 20
Back-space 20
Read Rows to be Elim. to DATA 20
Write End of Matrix Rec., 29
Save RHS Vector in HOLD
Back-space 29
Back-space 20 NROW Times
RETURN
2.01

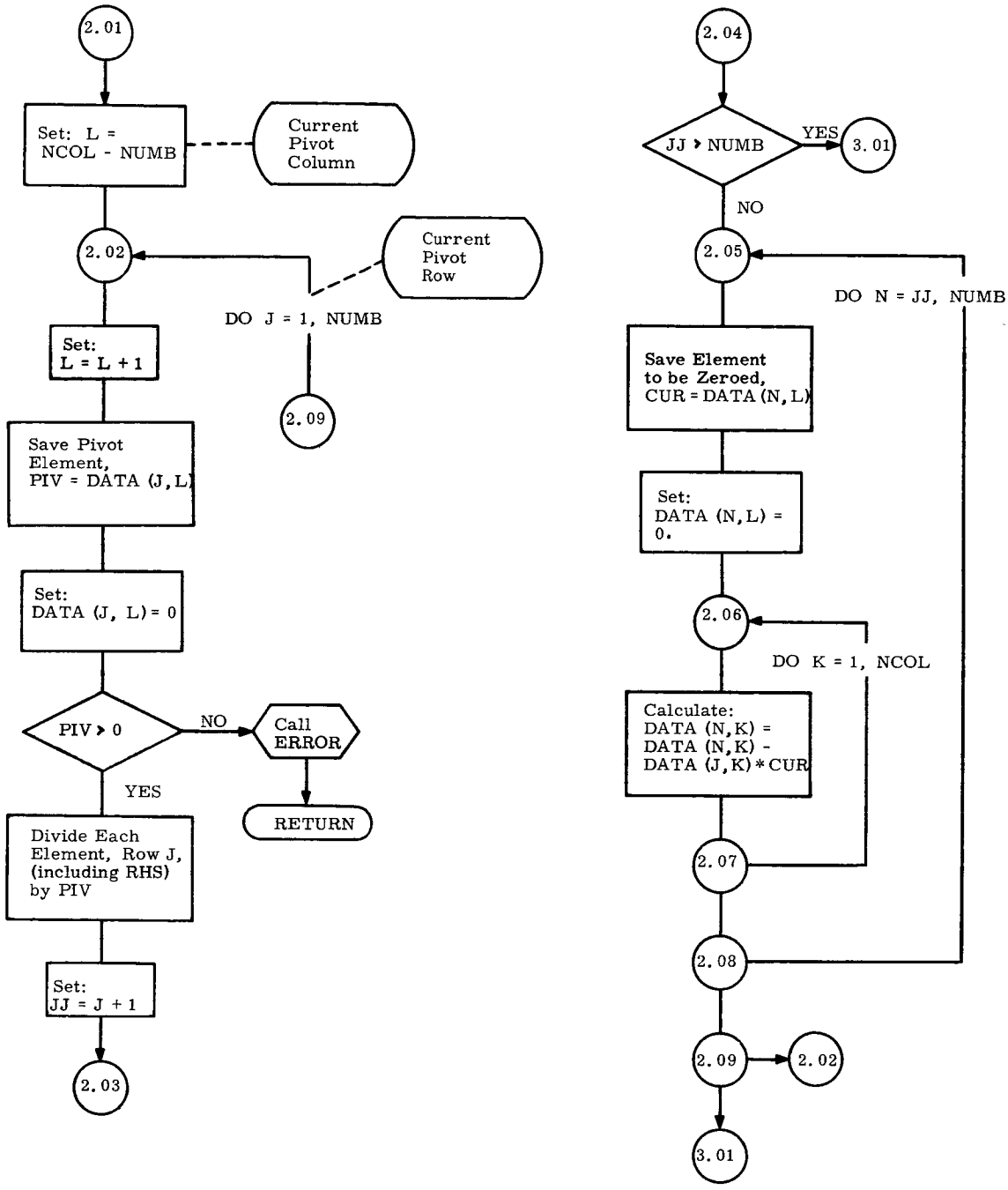
2.01
Set: L = NCOL - NUMB
Current Pivot Column
2.02
Current Pivot Row
DO J = 1, NUMB
Set: L = L + 1
2.09
Save Pivot Element, PIV = DATA (J, L)
Set: DATA (J, L) = 0
PIV > 0
NO
Call ERROR
RETURN
YES
Divide Each Element, Row J, (including RHS) by PIV
Set: JJ = J + 1
2.03
2.04
JJ > NUMB
YES
3.01
NO
2.05
DO N = JJ, NUMB
Save Element to be Zeroed, CUR = DATA (N, L)
Set: DATA (N, L) = 0.
2.06
DO K = 1, NCOL
Calculate: DATA (N, K) = DATA (N, K) - DATA (J, K) * CUR
2.07
2.08
2.09
2.02
3.01

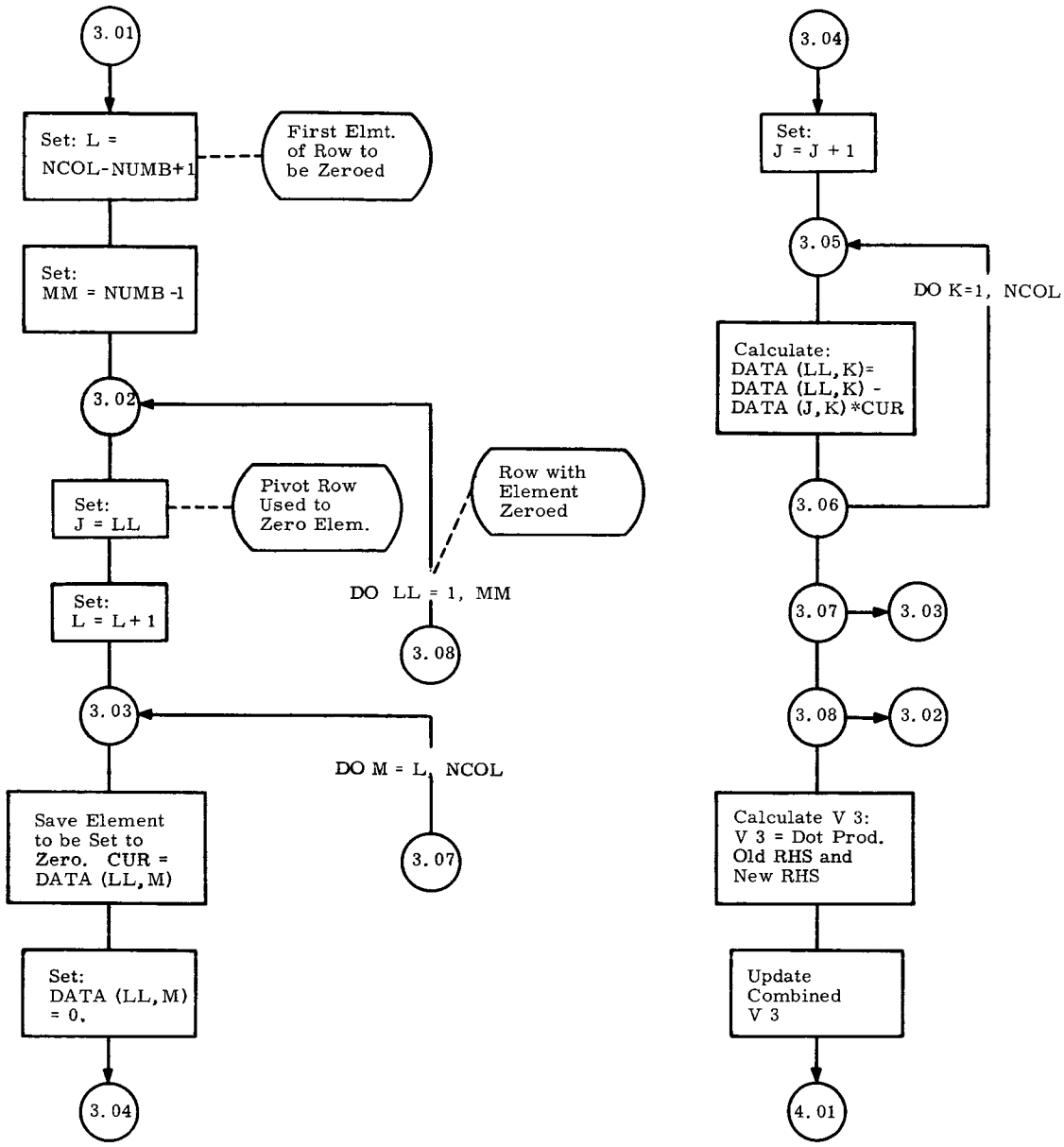
3.01
Set: L = NCOL-NUMB+1
First Elmt. of Row to be Zeroed
Set: MM = NUMB -1
3.02
Set: J = LL
Pivot Row Used to Zero Elem.
Row with Element Zeroed
Set: L = L+1
DO LL = 1, MM
3.08
3.03
DO M = L, NCOL
Save Element to be Set to Zero. CUR = DATA (LL,M)
3.07
Set: DATA (LL,M) = 0.
3.04
3.04
Set: J = J + 1
3.05
DO K=1, NCOL
Calculate: DATA (LL,K)= DATA (LL,K) - DATA (J,K)*CUR
3.06
3.07
3.03
3.08
3.02
Calculate V 3: V 3 = Dot Prod. Old RHS and New RHS
Update Combined V 3
4.01

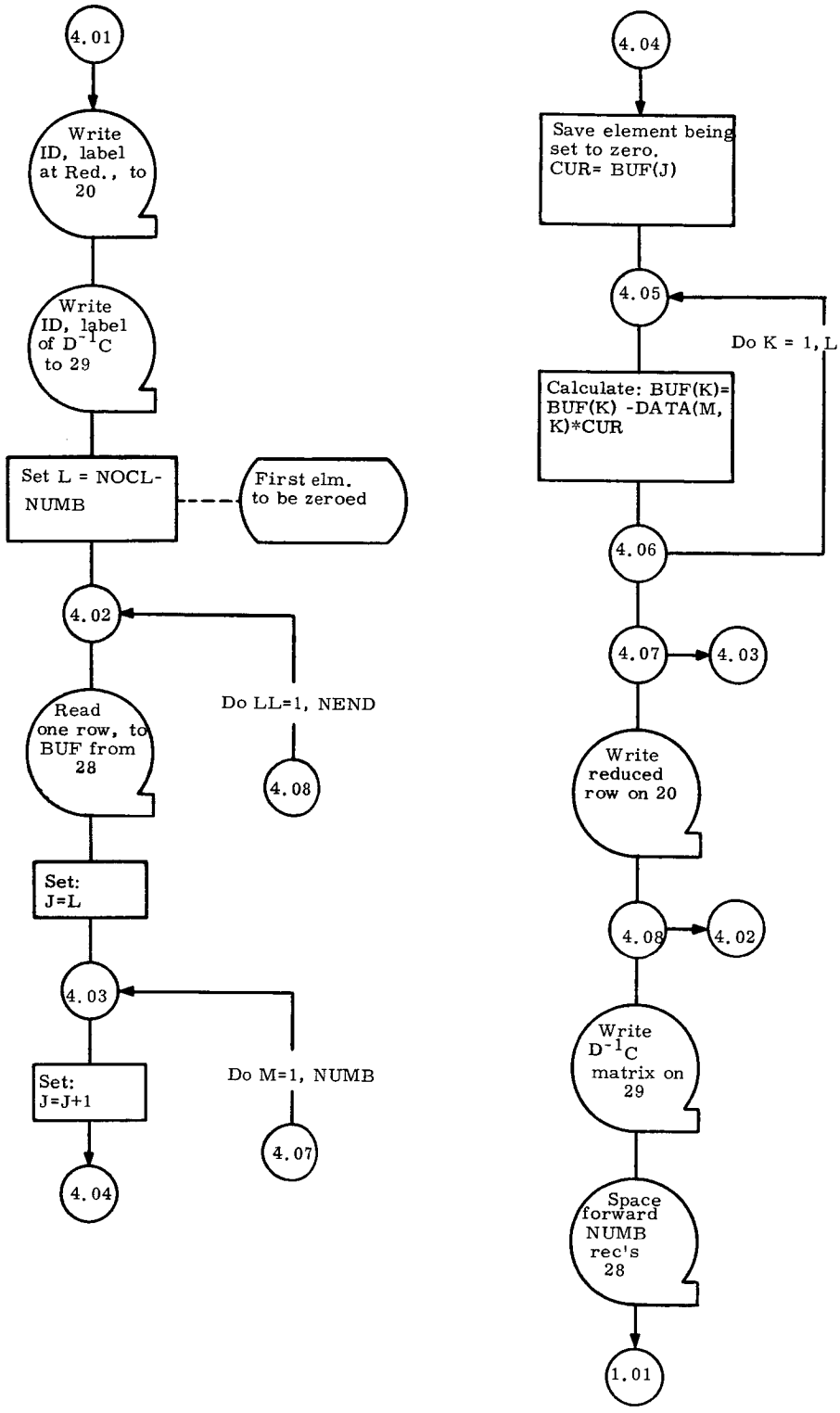
4.01
Write ID, label at Red., to 20
Write ID, label of $D^{-1}C$ to 29
Set L = NOCL-NUMB
First elm. to be zeroed
4.02
Read one row, to BUF from 28
Do LL=1, NEND
4.08
Set: J=L
4.03
Set: J=J+1
Do M=1, NUMB
4.07
4.04
4.04
Save element being set to zero. CUR= BUF(J)
4.05
Do K = 1, L
Calculate: BUF(K)= BUF(K) -DATA(M, K)*CUR
4.06
4.07
4.03
Write reduced row on 20
4.08
4.02
Write $D^{-1}C$ matrix on 29
Space forward NUMB rec's 28
1.01

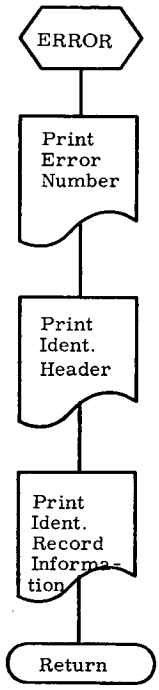
ERROR
Print Error Number
Print Ident. Header
Print Ident. Record Information
Return

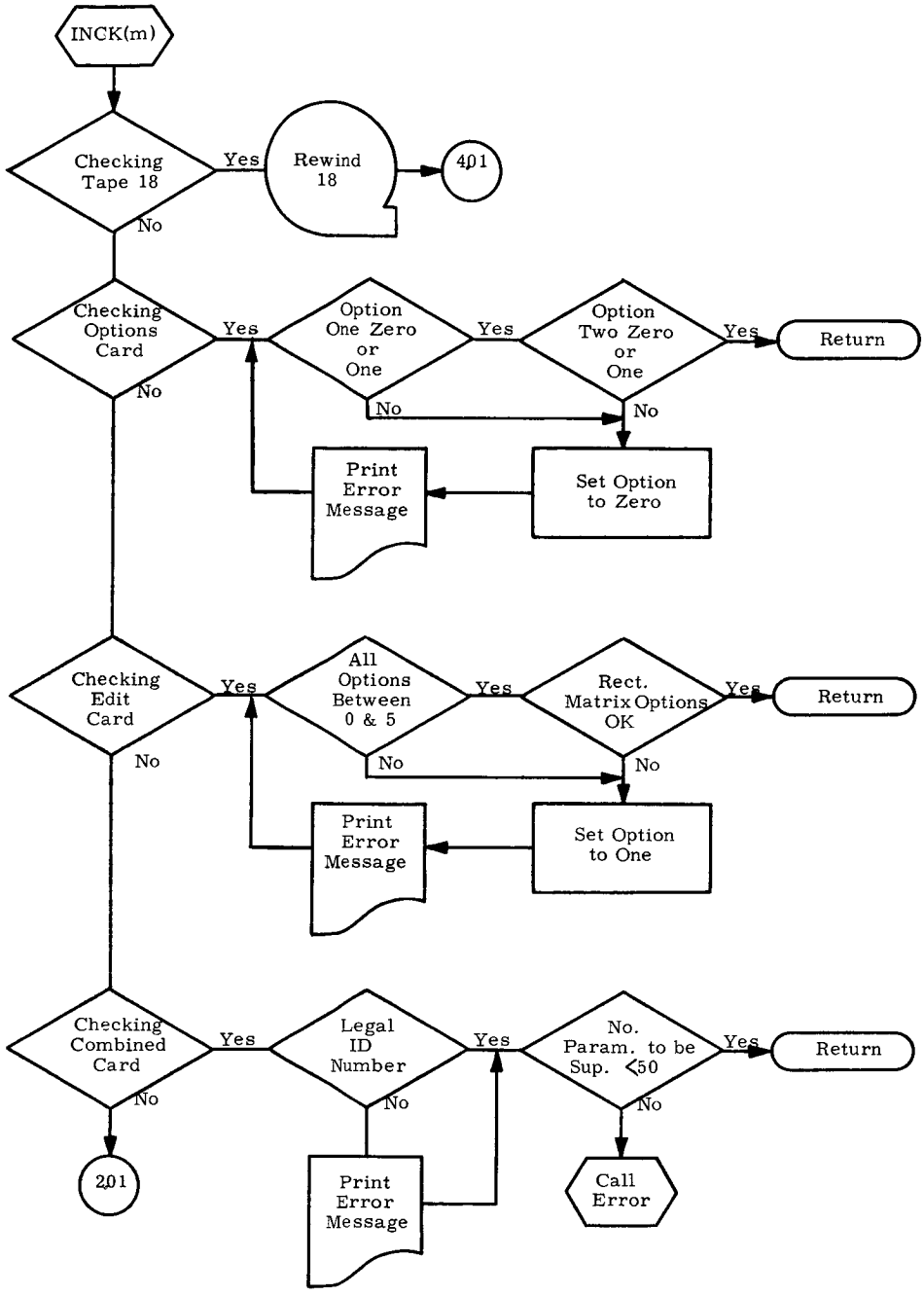
INCK(m)
Checking Tape 18
Yes
Rewind 18
401
No
Checking Options Card
Yes
Option One Zero or One
Yes
Option Two Zero or One
Yes
Return
No
No
No
Print Error Message
Set Option to Zero
Checking Edit Card
Yes
All Options Between 0 & 5
Yes
Rect. Matrix Options OK
Yes
Return
No
No
No
Print Error Message
Set Option to One
Checking Combined Card
Yes
Legal ID Number
Yes
No. Param. to be Sup. <50
Yes
Return
No
No
No
201
Print Error Message
Call Error

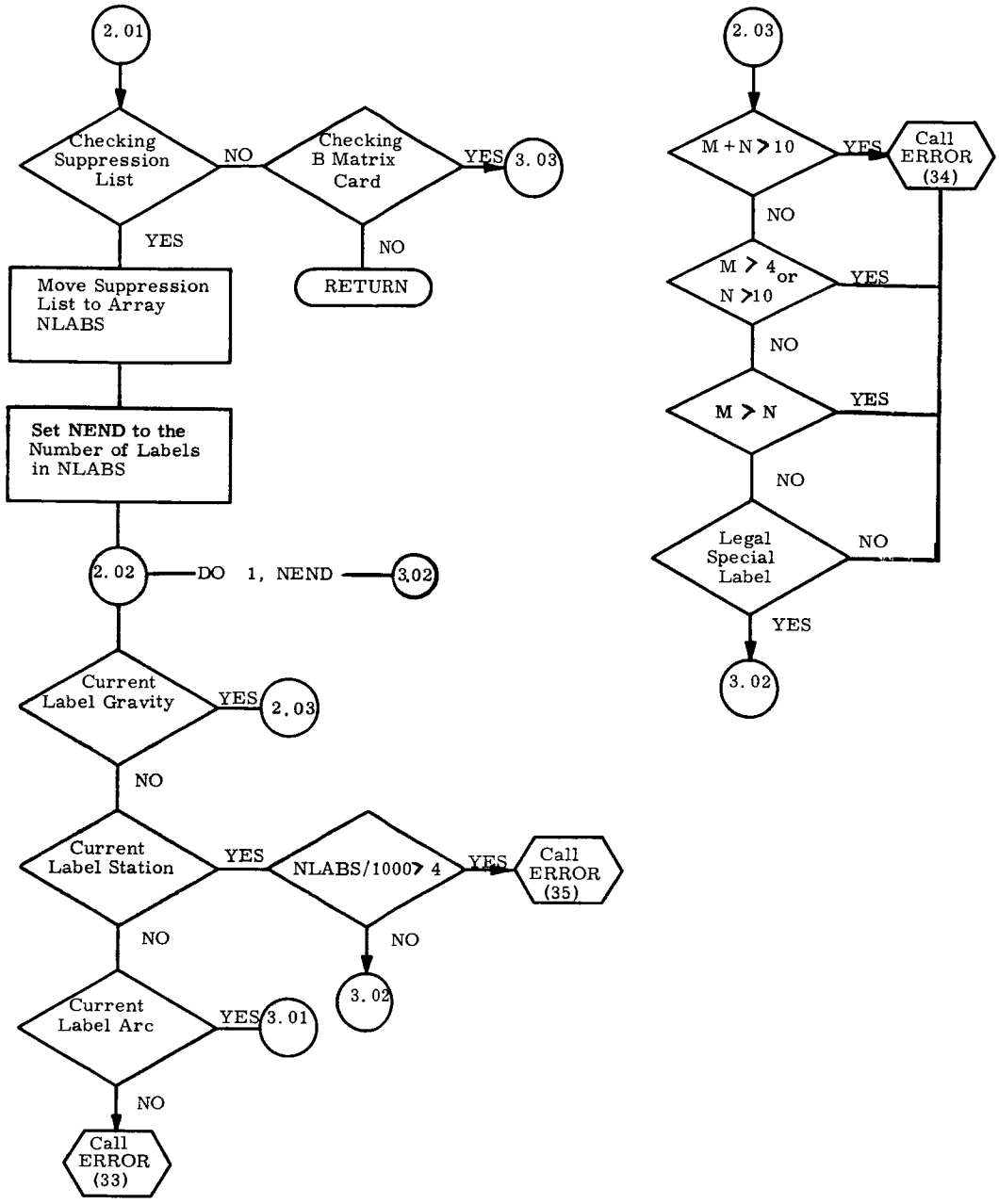
2.01
Checking Suppression List
NO
Checking B Matrix Card
YES
3.03
YES
NO
RETURN
Move Suppression List to Array NLABS
Set NEND to the Number of Labels in NLABS
2.02
DO 1, NEND
3.02
Current Label Gravity
YES
2.03
NO
Current Label Station
YES
NLABS/1000 > 4
YES
Call ERROR (35)
NO
NO
3.02
Current Label Arc
YES
3.01
NO
Call ERROR (33)
2.03
M + N > 10
YES
Call ERROR (34)
NO
M > 4 or N > 10
YES
NO
M > N
YES
NO
Legal Special Label
NO
YES
3.02

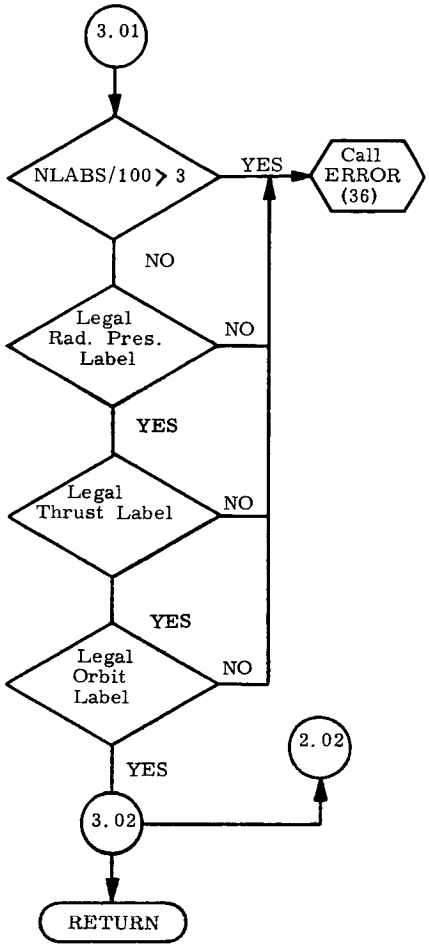
3.01
NLABS/100 > 3
YES
Call ERROR (36)
NO
Legal Rad. Pres. Label
NO
YES
Legal Thrust Label
NO
YES
Legal Orbit Label
NO
YES
2.02
3.02
RETURN

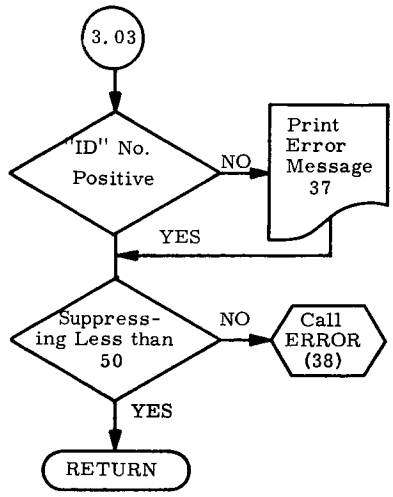
3.03
"ID" No. Positive
NO
Print Error Message 37
YES
Suppressing Less than 50
NO
Call ERROR (38)
YES
RETURN

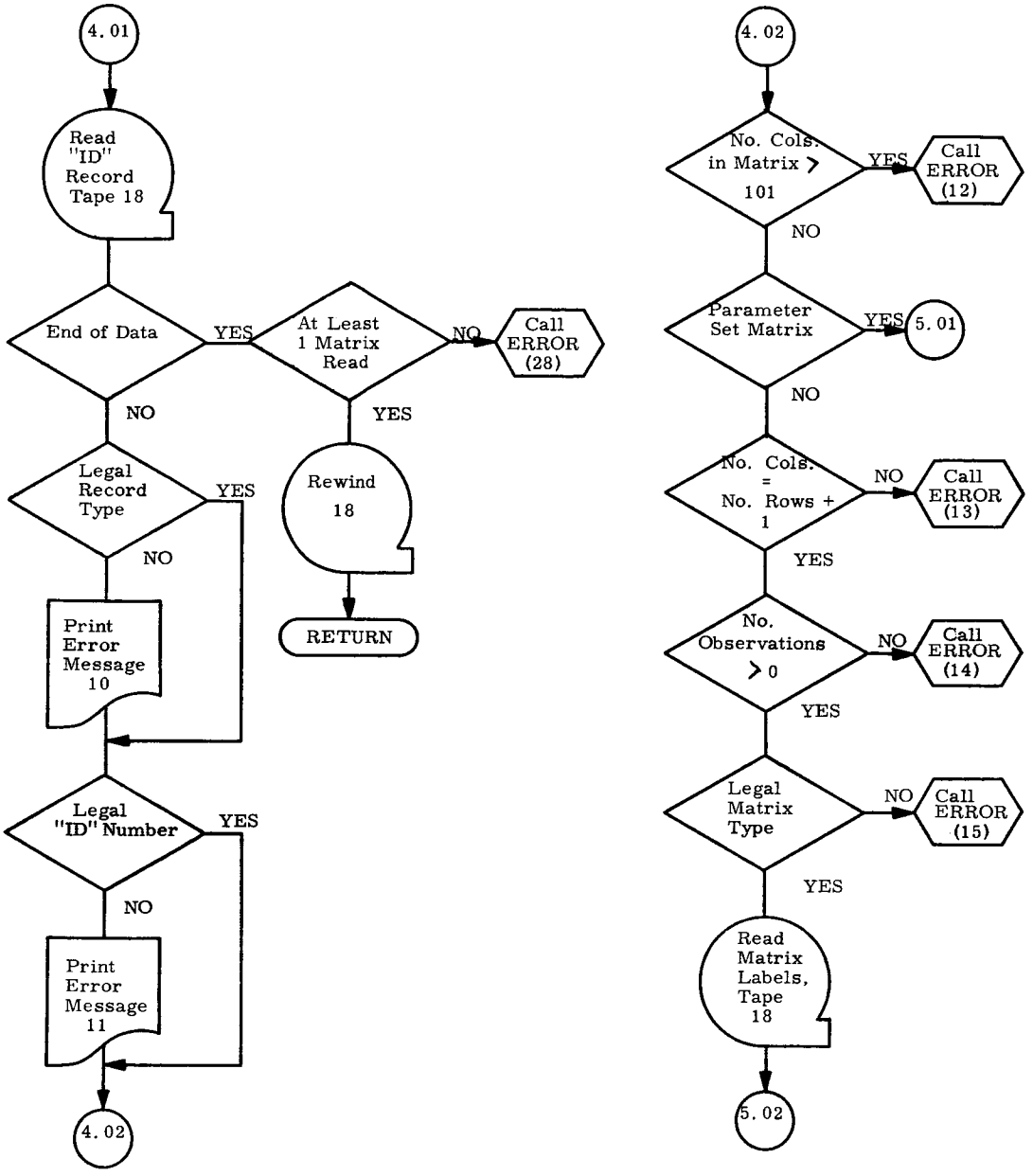
4.01
Read "ID" Record Tape 18
End of Data
YES
At Least 1 Matrix Read
NO
Call ERROR (28)
YES
Rewind 18
RETURN
NO
Legal Record Type
YES
NO
Print Error Message 10
Legal "ID" Number
YES
NO
Print Error Message 11
4.02
4.02
No. Cols. in Matrix > 101
YES
Call ERROR (12)
NO
Parameter Set Matrix
YES
5.01
NO
No. Cols. = No. Rows + 1
NO
Call ERROR (13)
YES
No. Observations > 0
NO
Call ERROR (14)
YES
Legal Matrix Type
NO
Call ERROR (15)
YES
Read Matrix Labels, Tape 18
5.02

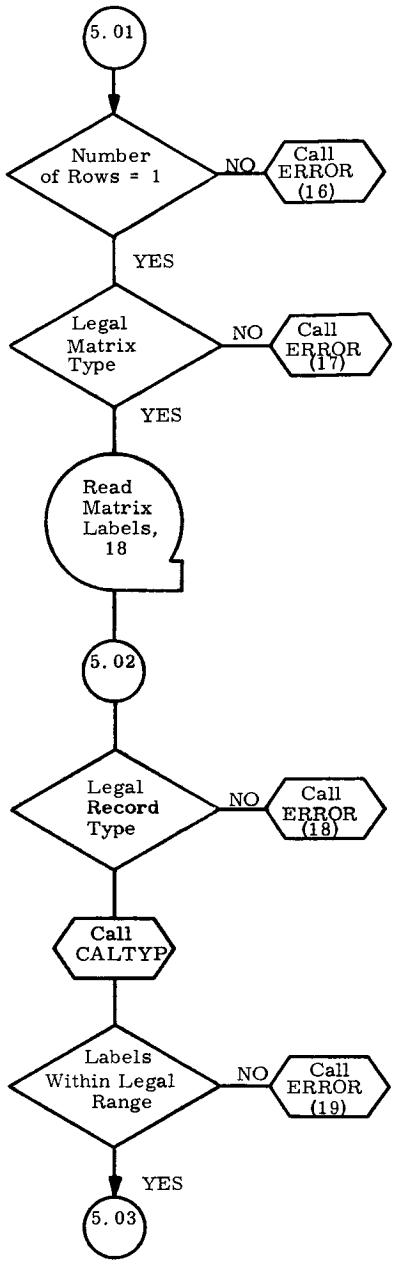
5.01
Number of Rows = 1
NO
Call ERROR (16)
YES
Legal Matrix Type
NO
Call ERROR (17)
YES
Read Matrix Labels, 18
5.02
Legal Record Type
NO
Call ERROR (18)
Call CALTYP
Labels Within Legal Range
NO
Call ERROR (19)
YES
5.03

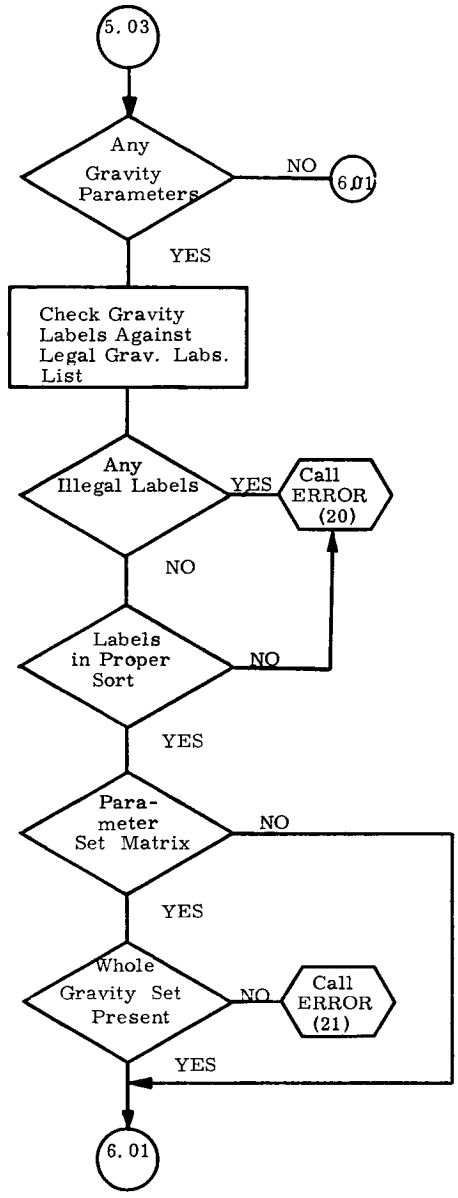
5.03
Any Gravity Parameters
NO
6.01
YES
Check Gravity Labels Against Legal Grav. Labs. List
Any Illegal Labels
YES
Call ERROR (20)
NO
Labels in Proper Sort
NO
YES
Para-meter Set Matrix
NO
YES
Whole Gravity Set Present
NO
Call ERROR (21)
YES
6.01

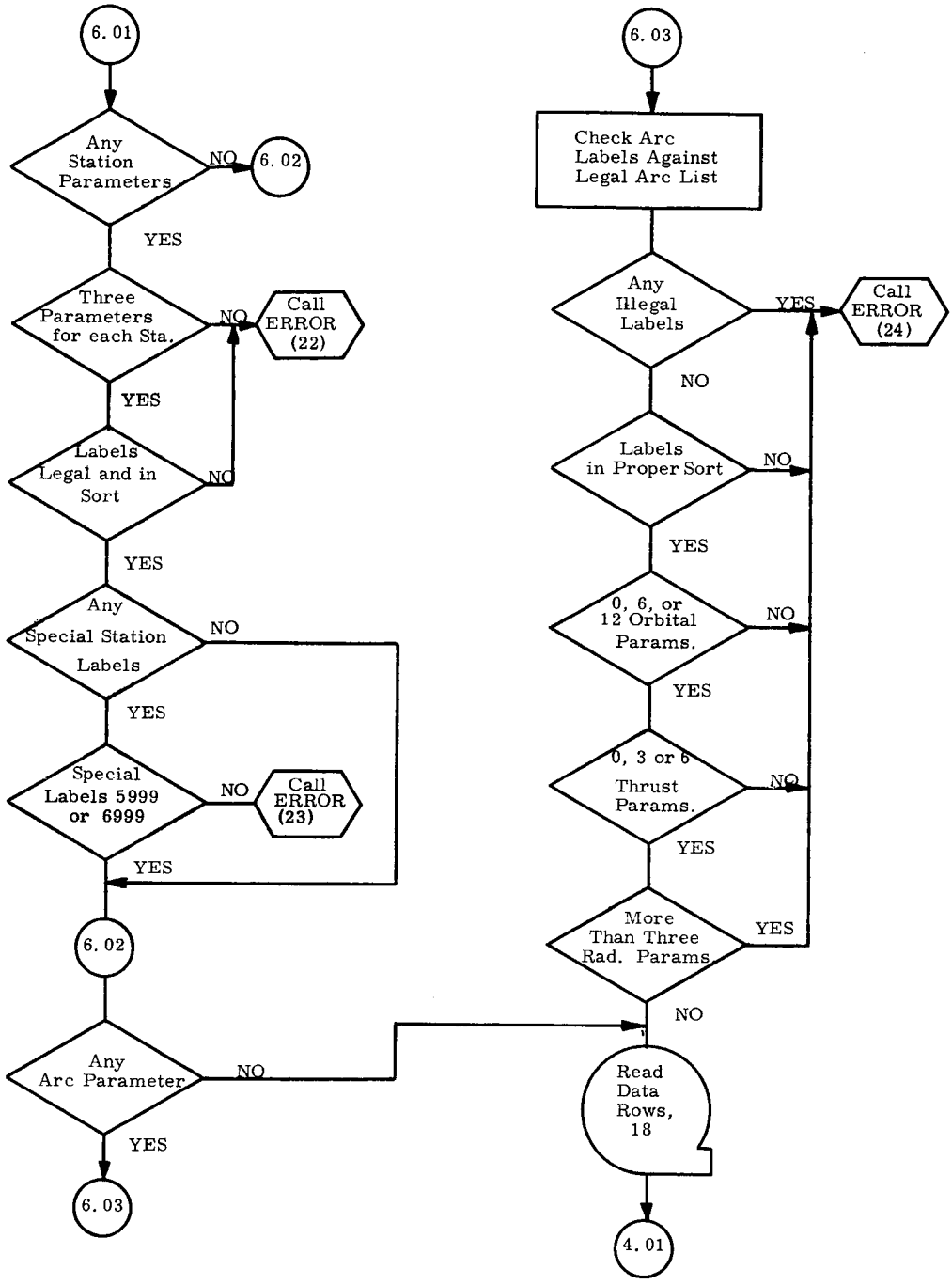
6.01
Any Station Parameters
NO
6.02
YES
Three Parameters for each Sta.
NO
Call ERROR (22)
YES
Labels Legal and in Sort
NO
YES
Any Special Station Labels
NO
YES
Special Labels 5999 or 6999
NO
Call ERROR (23)
YES
6.02
Any Arc Parameter
NO
YES
6.03
6.03
Check Arc Labels Against Legal Arc List
Any Illegal Labels
YES
Call ERROR (24)
NO
Labels in Proper Sort
NO
YES
0, 6, or 12 Orbital Params.
NO
YES
0, 3 or 6 Thrust Params.
NO
YES
More Than Three Rad. Params.
YES
NO
Read Data Rows, 18
4.01

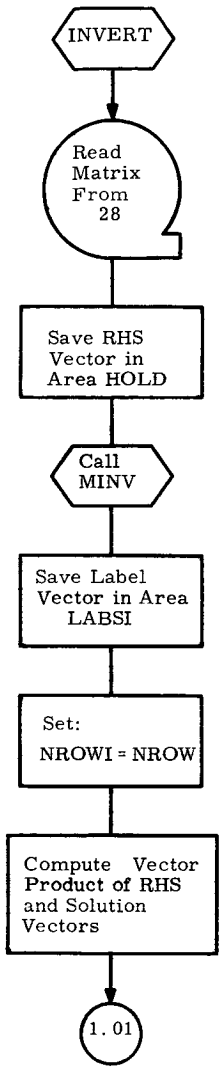
INVERT
Read Matrix From 28
Save RHS Vector in Area HOLD
Call MINV
Save Label Vector in Area LABSI
Set:
NROWI = NROW
Compute Vector Product of RHS and Solution Vectors
1.01

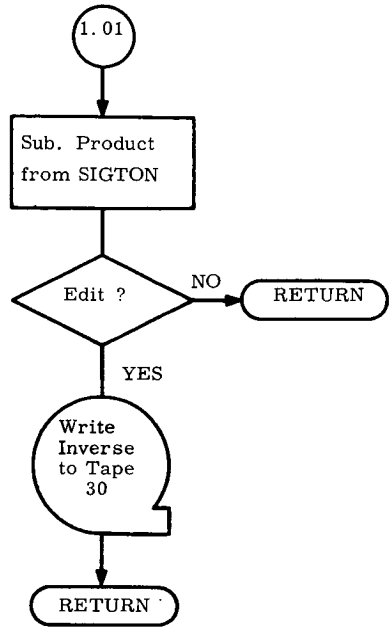
1.01
Sub. Product from SIGTON
Edit ?
NO
RETURN
YES
Write Inverse to Tape 30
RETURN

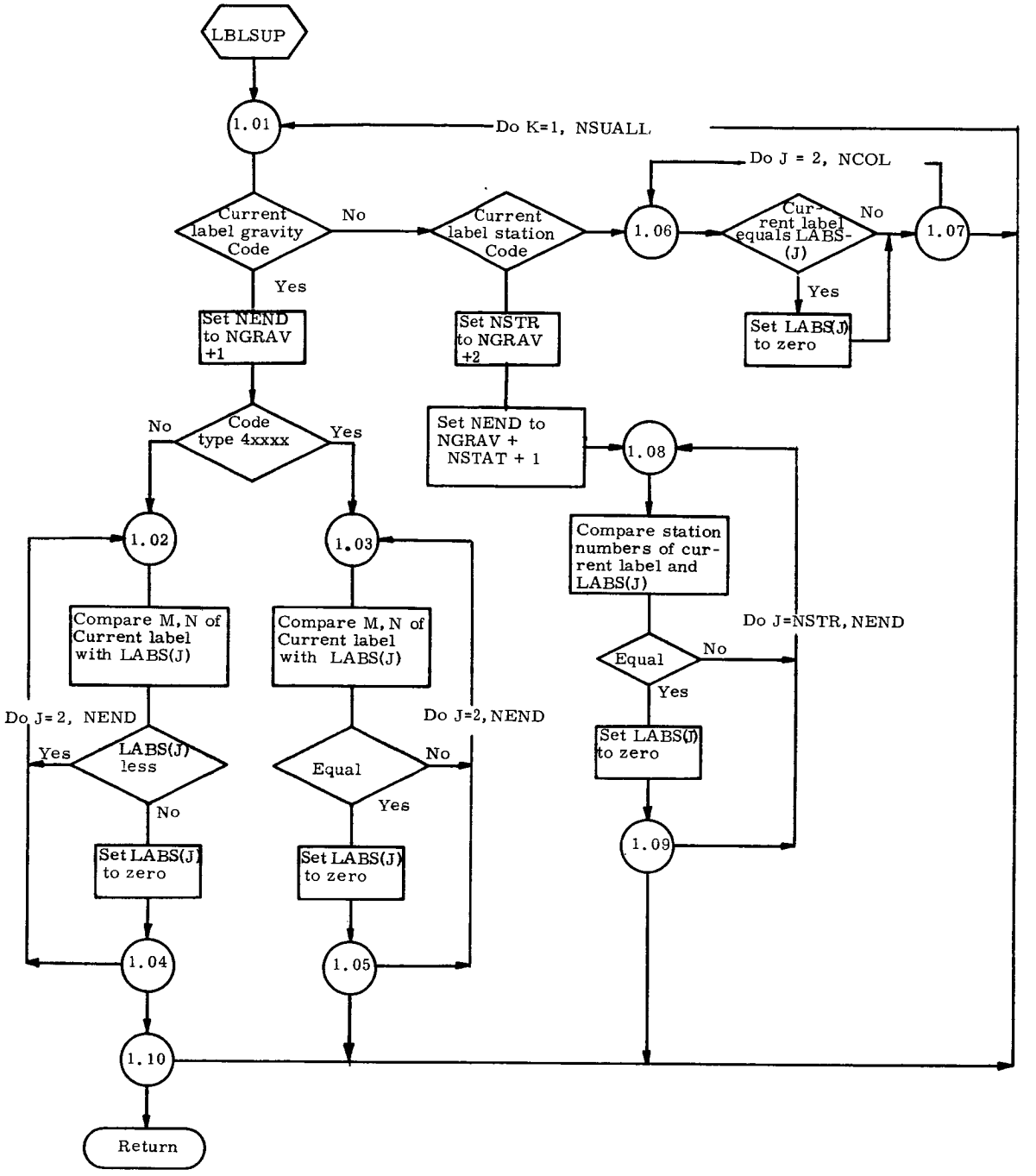
LBLSUP
1.01
Do K=1, NSUALL
Do J = 2, NCOL
Current label gravity Code
No
Current label station Code
1.06
Current label equals LABS-(J)
No
1.07
Yes
Set NEND to NGRAV +1
Set NSTR to NGRAV +2
Yes
Set LABS(J) to zero
No
Code type 4xxxx
Yes
Set NEND to NGRAV + NSTAT + 1
1.08
1.02
1.03
Compare station numbers of current label and LABS(J)
Compare M, N of Current label with LABS(J)
Compare M, N of Current label with LABS(J)
Do J=NSTR, NEND
Equal
No
Yes
Do J= 2, NEND
Do J=2, NEND
Yes
LABS(J) less
Equal
No
Yes
Set LABS(J) to zero
No
Set LABS(J) to zero
Set LABS(J) to zero
1.09
1.04
1.05
1.10
Return

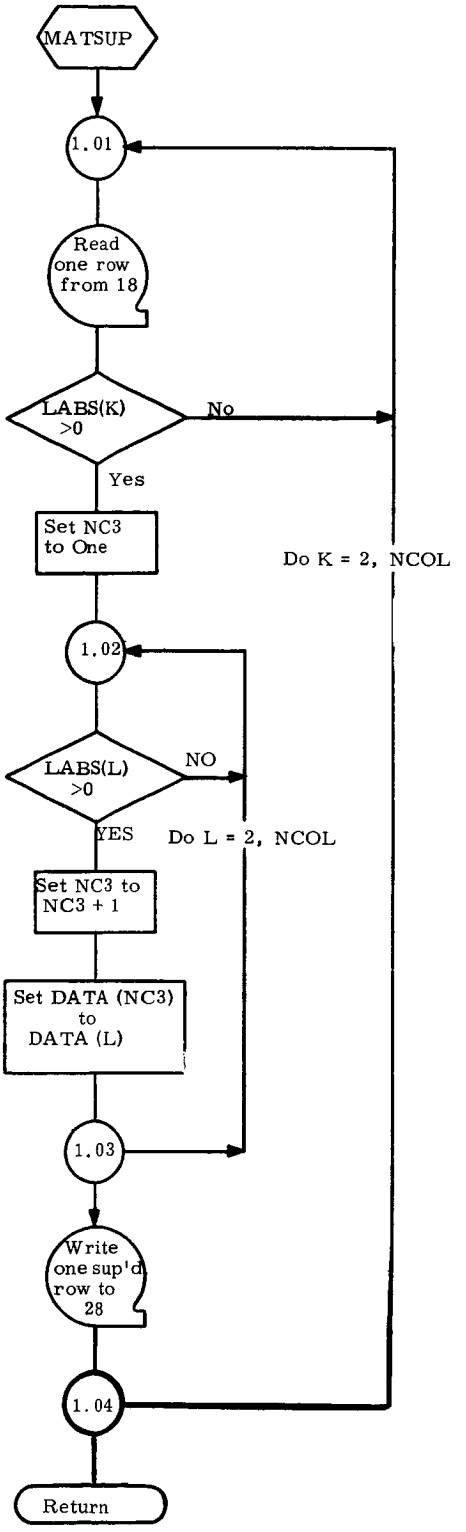
MATSUP
1.01
Read one row from 18
LABS(K) >0
No
Yes
Set NC3 to One
Do K = 2, NCOL
1.02
LABS(L) >0
NO
YES
Do L = 2, NCOL
Set NC3 to NC3 + 1
Set DATA (NC3) to DATA (L)
1.03
Write one sup'd row to 28
1.04
Return

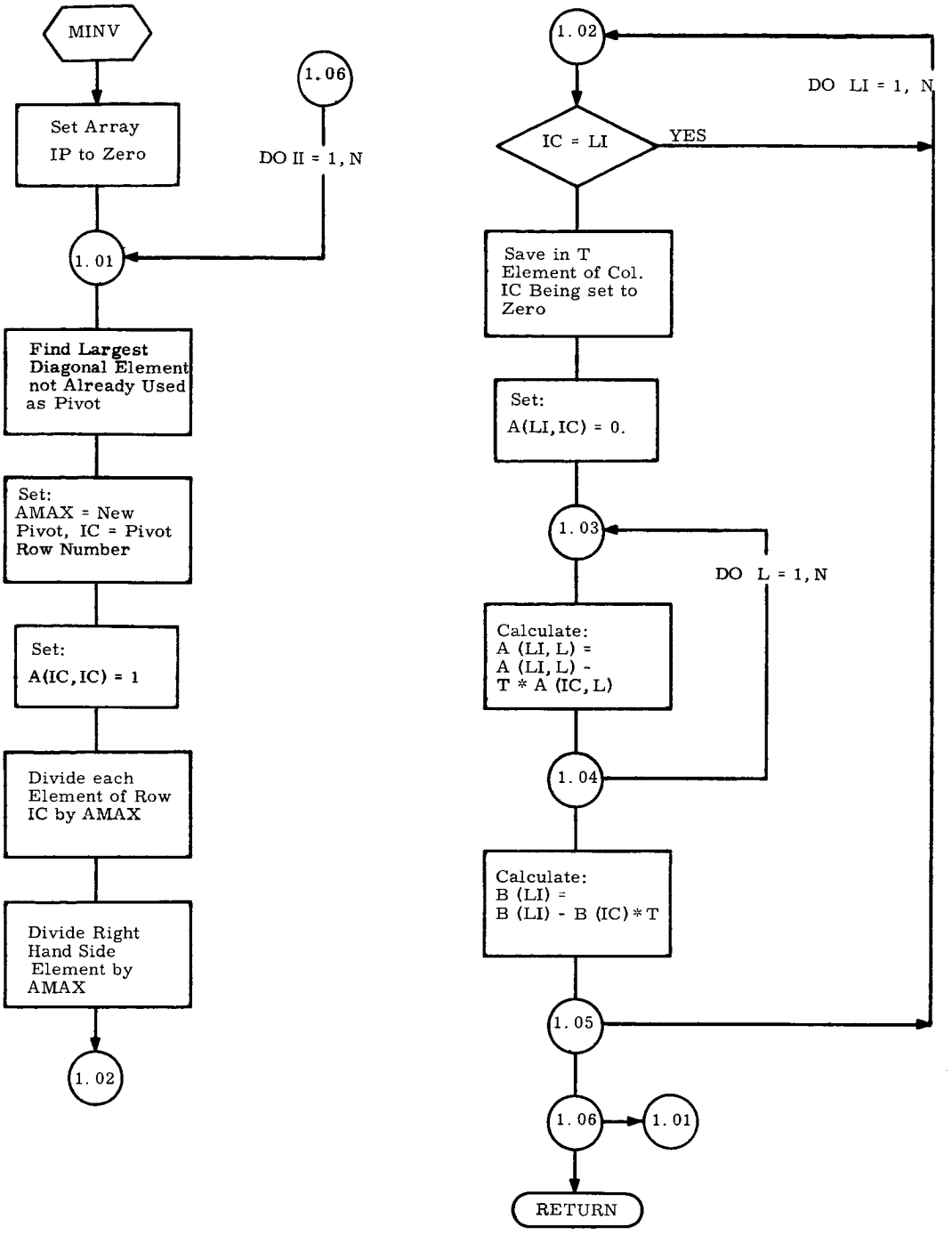
MINV
Set Array IP to Zero
1.06
DO II = 1, N
1.01
Find Largest Diagonal Element not Already Used as Pivot
Set: AMAX = New Pivot, IC = Pivot Row Number
Set: A(IC, IC) = 1
Divide each Element of Row IC by AMAX
Divide Right Hand Side Element by AMAX
1.02
1.02
DO LI = 1, N
IC = LI
YES
Save in T Element of Col. IC Being set to Zero
Set: A(LI, IC) = 0.
1.03
DO L = 1, N
Calculate: A (LI, L) = A (LI, L) - T * A (IC, L)
1.04
Calculate: B (LI) = B (LI) - B (IC) * T
1.05
1.06
1.01
RETURN

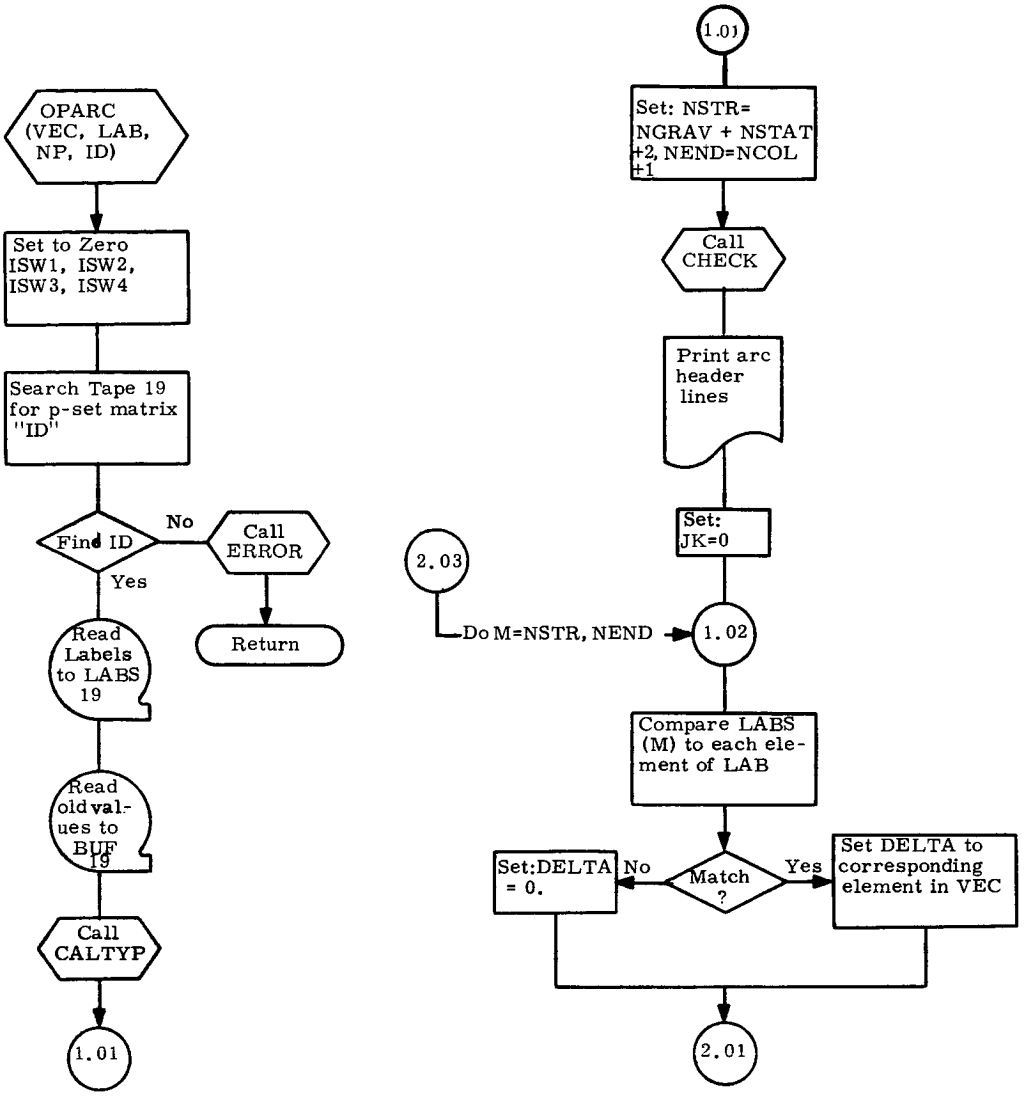
OPARC (VEC, LAB, NP, ID)
Set to Zero ISW1, ISW2, ISW3, ISW4
Search Tape 19 for p-set matrix "ID"
Find ID
No
Call ERROR
Return
Yes
Read Labels to LABS 19
Read old values to BUF 19
Call CALTYP
1.01
1.01
Set: NSTR= NGRAV + NSTAT +2, NEND=NCOL +1
Call CHECK
Print arc header lines
Set: JK=0
2.03
Do M=NSTR, NEND
1.02
Compare LABS (M) to each element of LAB
Set:DELTA = 0.
No
Match ?
Yes
Set DELTA to corresponding element in VEC
2.01

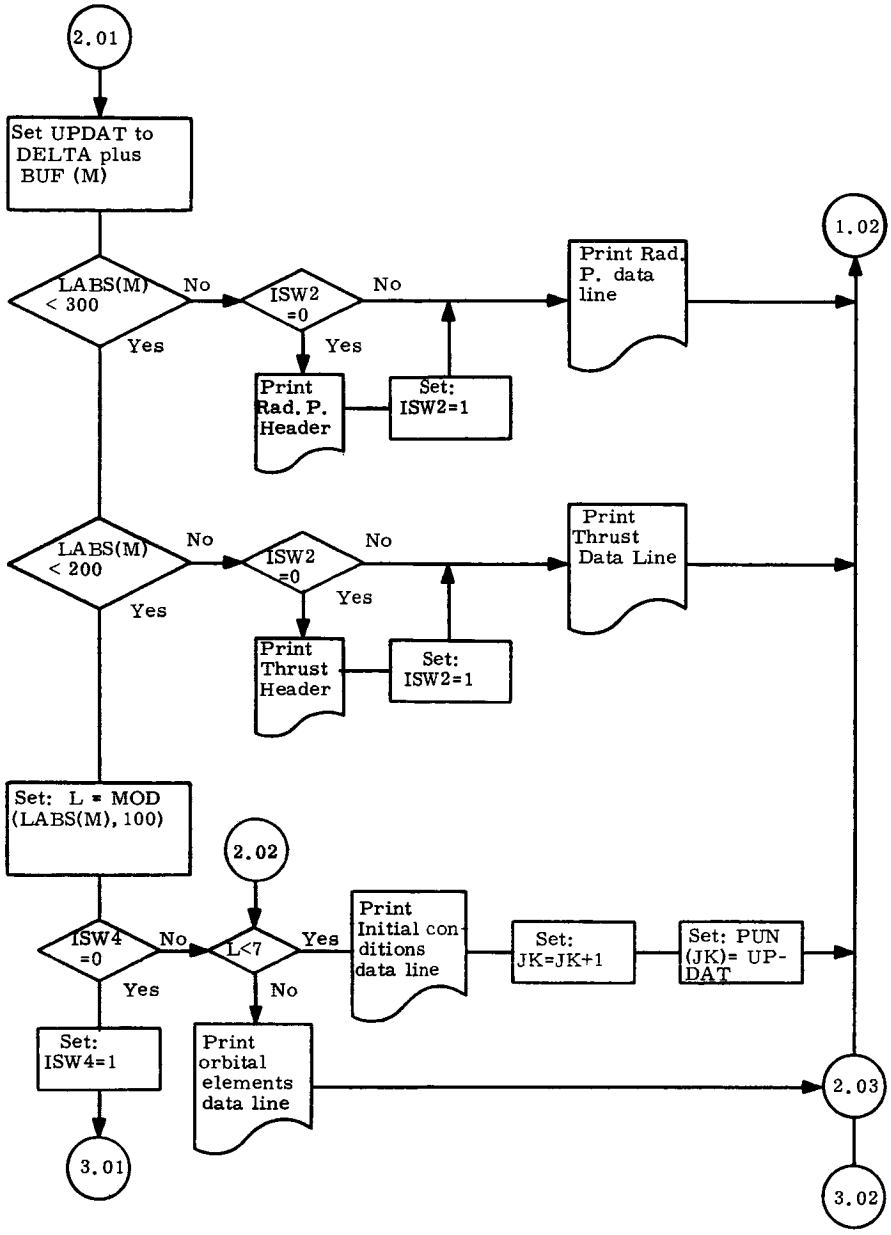
2.01
Set UPDAT to DELTA plus BUF (M)
LABS(M) < 300
No
Yes
ISW2 =0
No
Yes
Print Rad. P. Header
Set: ISW2=1
Print Rad. P. data line
1.02
LABS(M) < 200
No
Yes
ISW2 =0
No
Yes
Print Thrust Header
Set: ISW2=1
Print Thrust Data Line
Set: L = MOD (LABS(M), 100)
2.02
ISW4 =0
No
Yes
L<7
Yes
No
Print Initial conditions data line
Set: JK=JK+1
Set: PUN (JK)= UP-DAT
Set: ISW4=1
Print orbital elements data line
2.03
3.01
3.02

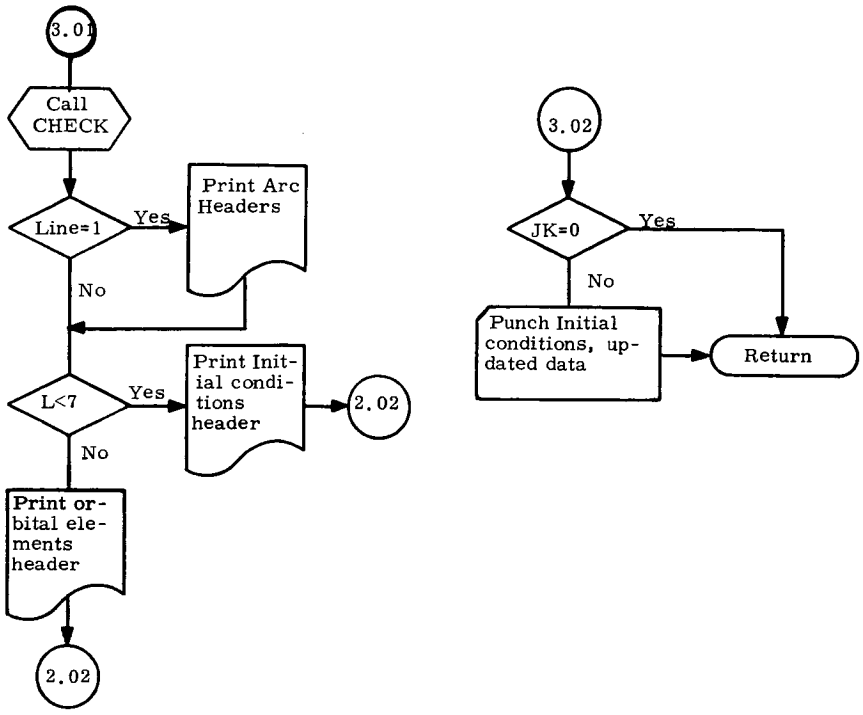
3.01
Call CHECK
Line=1
Yes
Print Arc Headers
No
L<7
Yes
Print Initial conditions header
2.02
No
Print orbital elements header
2.02
3.02
JK=0
Yes
No
Punch Initial conditions, updated data
Return

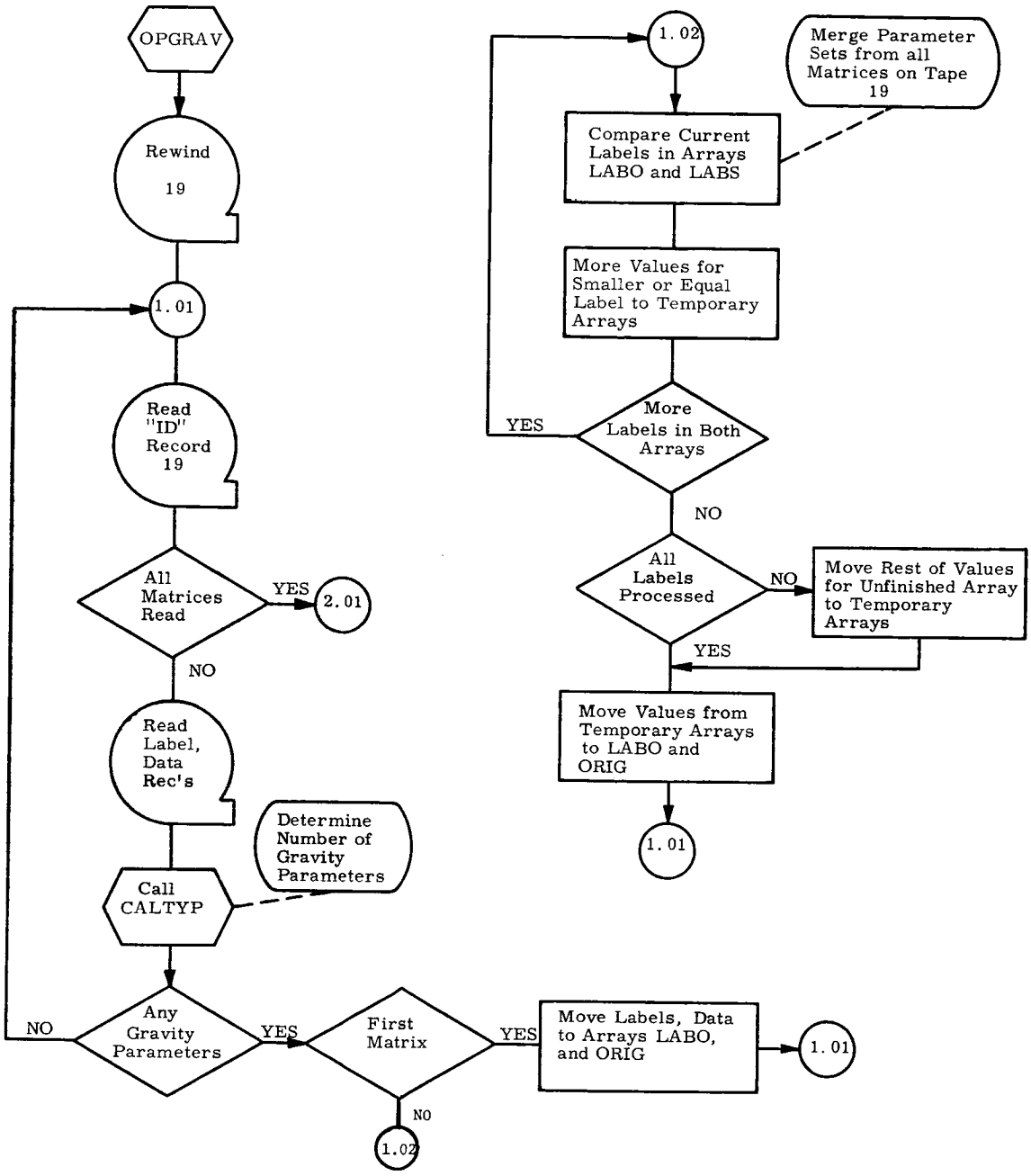
OPGRAV
Rewind 19
1.01
Read "ID" Record 19
All Matrices Read
YES
2.01
NO
Read Label, Data Rec's
Determine Number of Gravity Parameters
Call CALTYP
Any Gravity Parameters
NO
YES
First Matrix
YES
NO
1.02
Move Labels, Data to Arrays LABO, and ORIG
1.01
1.02
Merge Parameter Sets from all Matrices on Tape 19
Compare Current Labels in Arrays LABO and LABS
More Values for Smaller or Equal Label to Temporary Arrays
More Labels in Both Arrays
YES
NO
All Labels Processed
NO
Move Rest of Values for Unfinished Array to Temporary Arrays
YES
Move Values from Temporary Arrays to LABO and ORIG
1.01

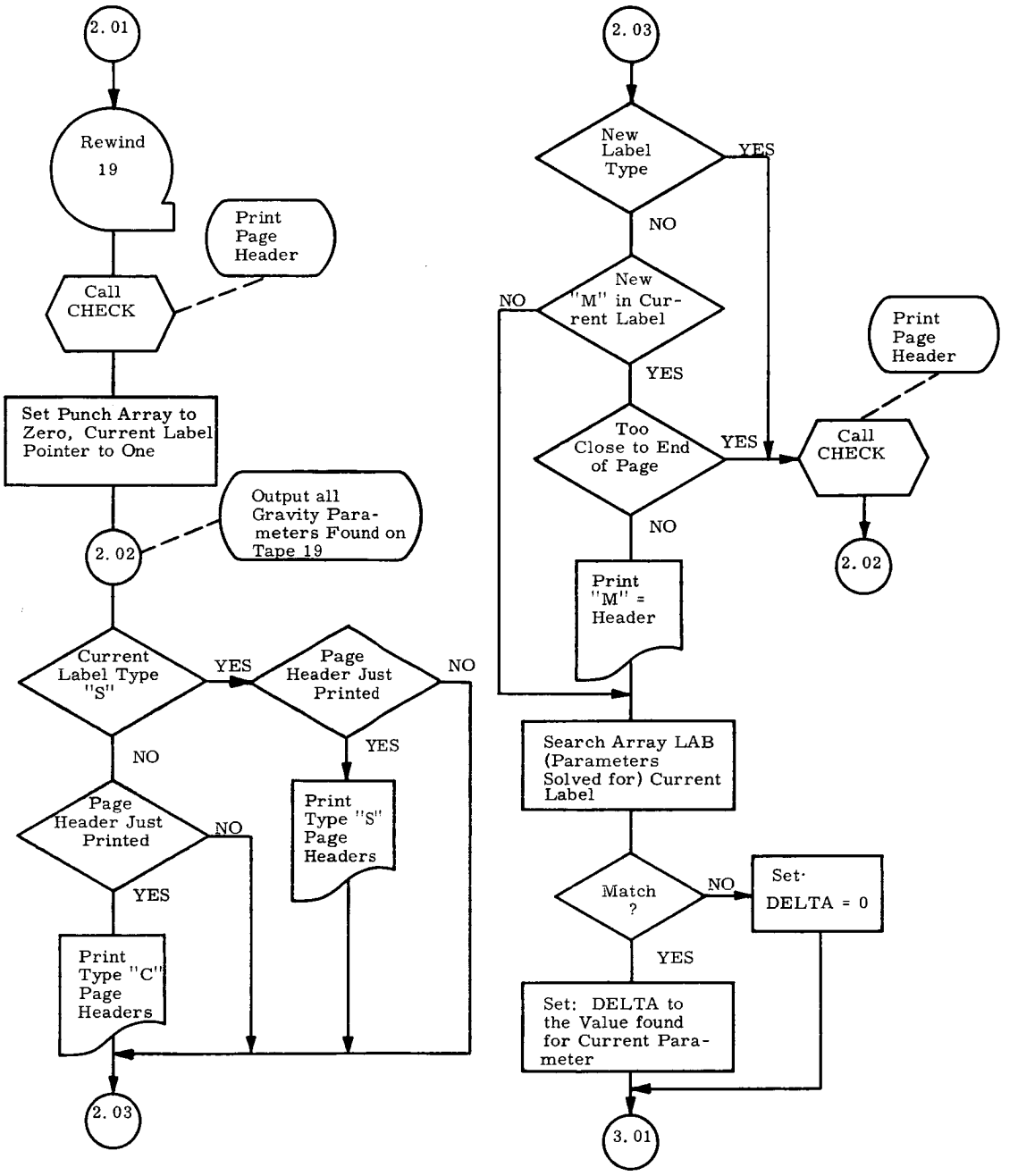
2.01
Rewind 19
Print Page Header
Call CHECK
Set Punch Array to Zero, Current Label Pointer to One
Output all Gravity Parameters Found on Tape 19
2.02
Current Label Type "S"
YES
Page Header Just Printed
NO
YES
Print Type "S" Page Headers
NO
Page Header Just Printed
NO
YES
Print Type "C" Page Headers
2.03
2.03
New Label Type
YES
NO
New "M" in Current Label
NO
YES
Too Close to End of Page
YES
NO
Print Page Header
Call CHECK
2.02
Print "M" = Header
Search Array LAB (Parameters Solved for) Current Label
Match ?
NO
Set: DELTA = 0
YES
Set: DELTA to the Value found for Current Parameter
3.01

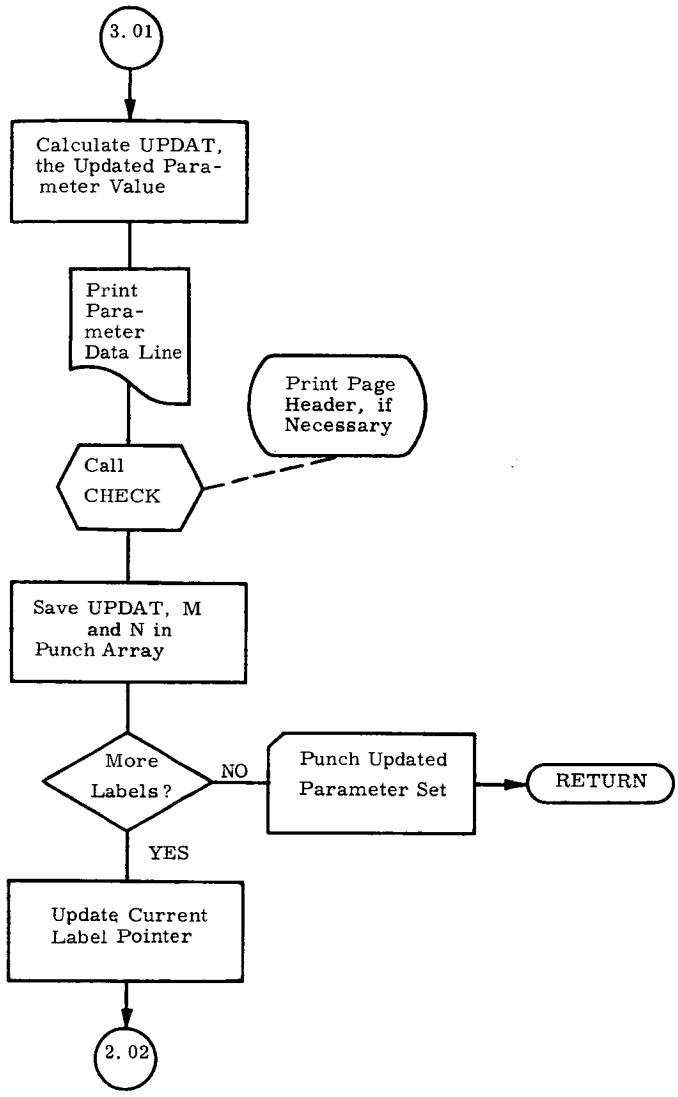
3.01
Calculate UPDAT, the Updated Parameter Value
Print Parameter Data Line
Print Page Header, if Necessary
Call CHECK
Save UPDAT, M and N in Punch Array
More Labels?
NO
Punch Updated Parameter Set
RETURN
YES
Update Current Label Pointer
2.02

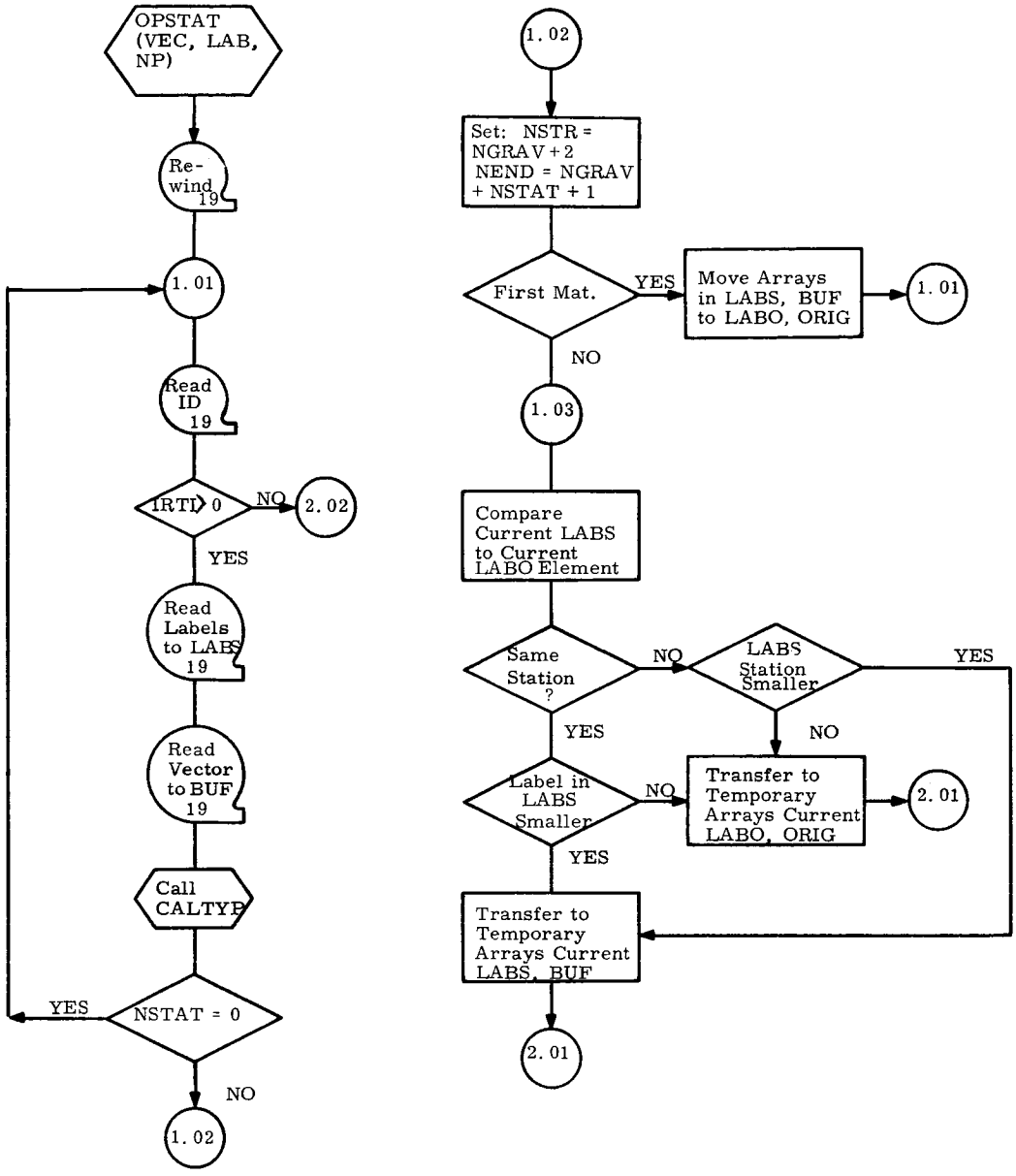
OPSTAT (VEC, LAB, NP)
Re-wind 19
1.01
Read ID 19
IRTI > 0
NO
2.02
YES
Read Labels to LABS 19
Read Vector to BUF 19
Call CALTYP
NSTAT = 0
YES
NO
1.02
1.02
Set: NSTR = NGRAV + 2
NEND = NGRAV + NSTAT + 1
First Mat.
YES
Move Arrays in LABS, BUF to LABO, ORIG
1.01
NO
1.03
Compare Current LABS to Current LABO Element
Same Station ?
NO
LABS Station Smaller
YES
YES
NO
Label in LABS Smaller
NO
Transfer to Temporary Arrays Current LABO, ORIG
2.01
YES
Transfer to Temporary Arrays Current LABS, BUF
2.01

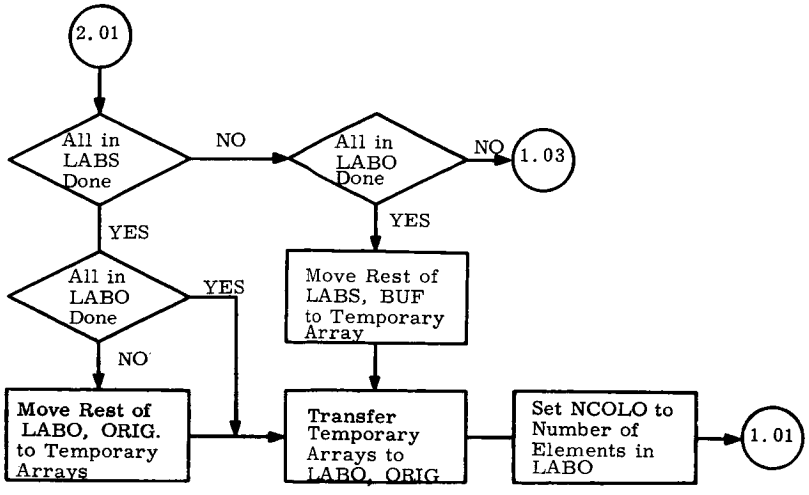
2.01
All in LABS Done
NO
All in LABO Done
NO
1.03
YES
YES
All in LABO Done
YES
Move Rest of LABS, BUF to Temporary Array
NO
Move Rest of LABO, ORIG. to Temporary Arrays
Transfer Temporary Arrays to LABO, ORIG.
Set NCOLO to Number of Elements in LABO
1.01

2.02
Back-space 19
CALL CHECK
Print Station Header
3.01

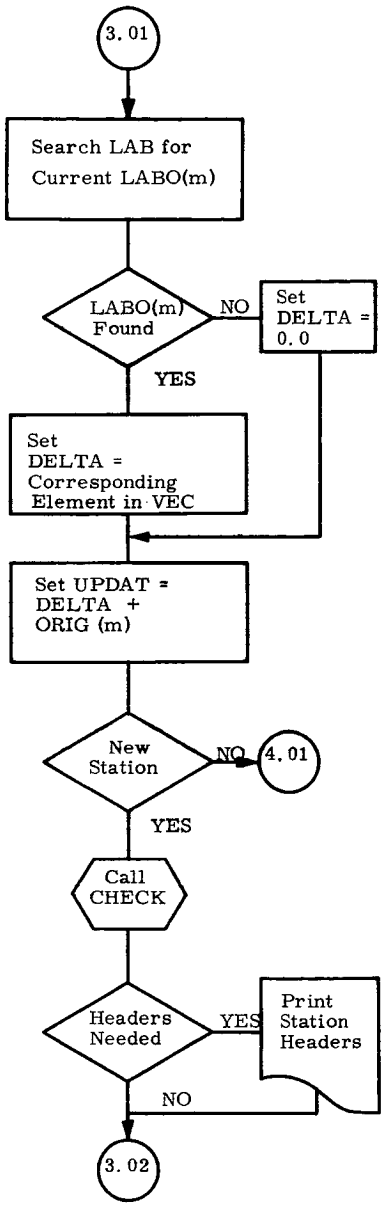
3.01
Search LAB for Current LABO(m)
LABO(m) Found
NO
Set DELTA = 0.0
YES
Set DELTA = Corresponding Element in VEC
Set UPDAT = DELTA + ORIG (m)
New Station
NO
4.01
YES
Call CHECK
Headers Needed
YES
Print Station Headers
NO
3.02

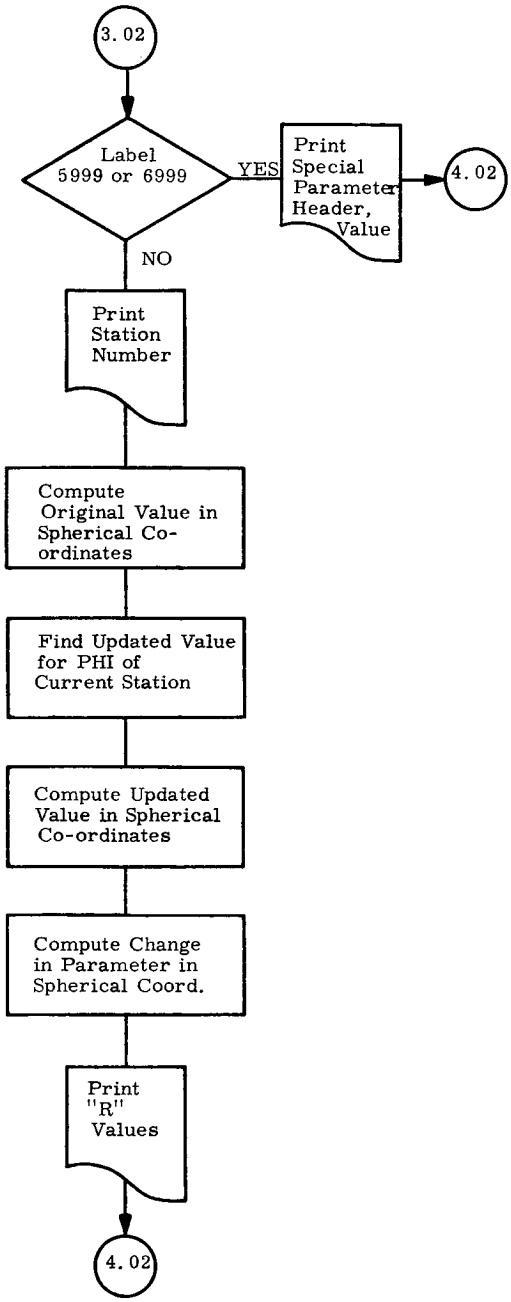
3.02
Label 5999 or 6999
YES
Print Special Parameter Header, Value
4.02
NO
Print Station Number
Compute Original Value in Spherical Co-ordinates
Find Updated Value for PHI of Current Station
Compute Updated Value in Spherical Co-ordinates
Compute Change in Parameter in Spherical Coord.
Print "R" Values
4.02

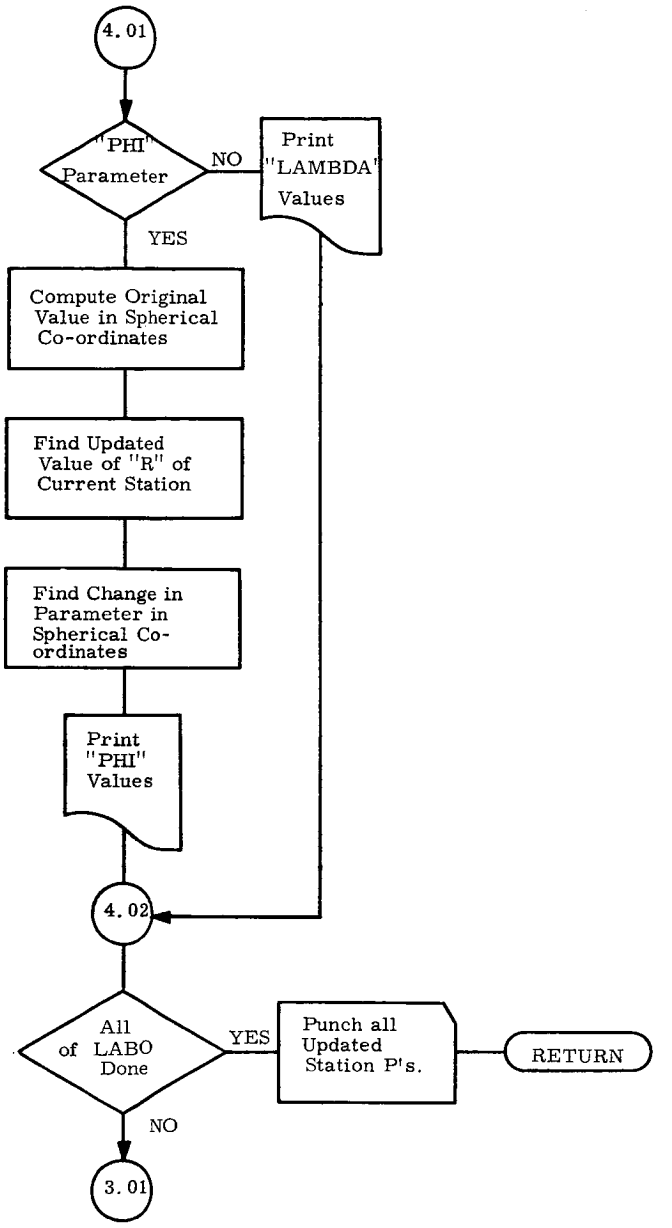
4.01
"PHI" Parameter
NO
Print "LAMBDA" Values
YES
Compute Original Value in Spherical Co-ordinates
Find Updated Value of "R" of Current Station
Find Change in Parameter in Spherical Co-ordinates
Print "PHI" Values
4.02
All of LABO Done
YES
Punch all Updated Station P's.
RETURN
NO
3.01

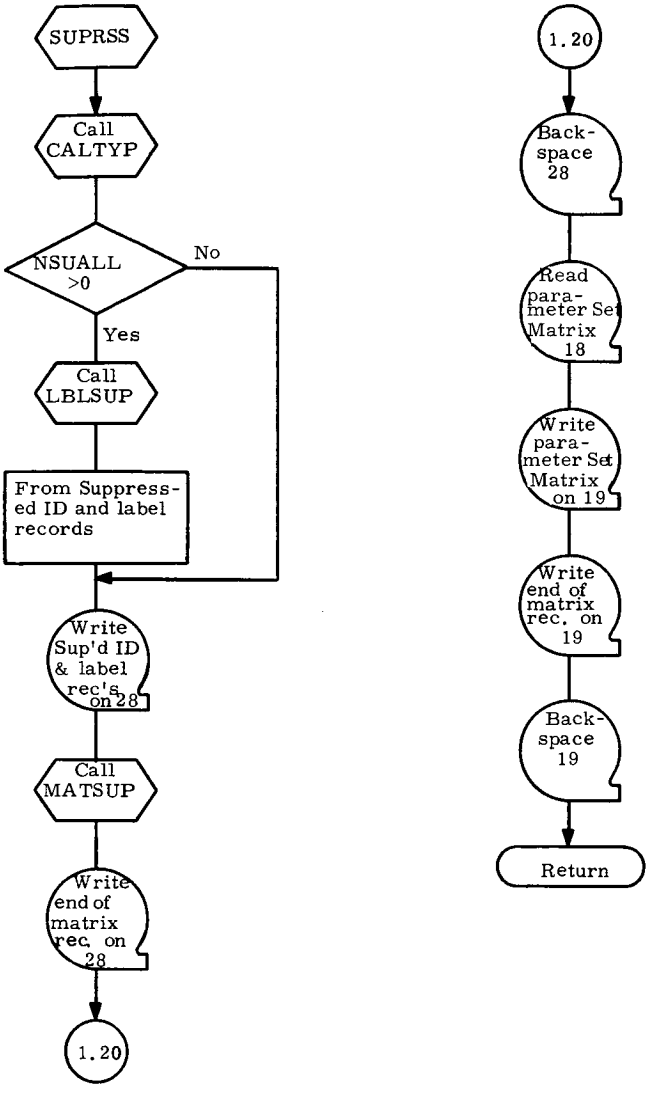
SUPRSS
Call CALTYP
NSUALL >0
No
Yes
Call LBLSUP
From Suppressed ID and label records
Write Sup'd ID & label rec's on 28
Call MATSUP
Write end of matrix rec. on 28
1.20
1.20
Back-space 28
Read parameter Set Matrix 18
Write parameter Set Matrix on 19
Write end of matrix rec. on 19
Back-space 19
Return

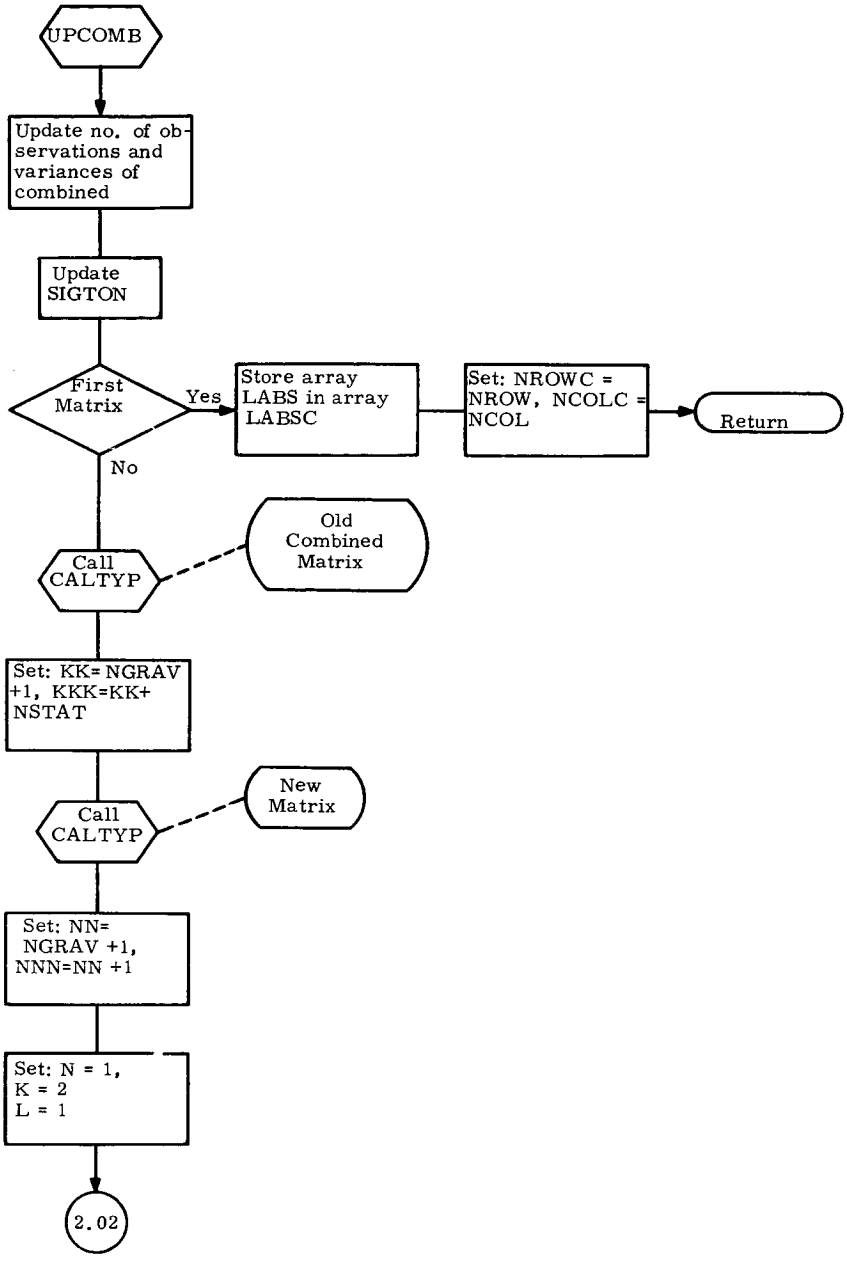
UPCOMB
Update no. of observations and variances of combined
Update SIGTON
First Matrix
Yes
Store array LABS in array LABSC
Set: NROWC = NROW, NCOLC = NCOL
Return
No
Call CALTYP
Old Combined Matrix
Set: KK= NGRAV +1, KKK=KK+ NSTAT
Call CALTYP
New Matrix
Set: NN= NGRAV +1, NNN=NN +1
Set: N = 1, K = 2 L = 1
2.02

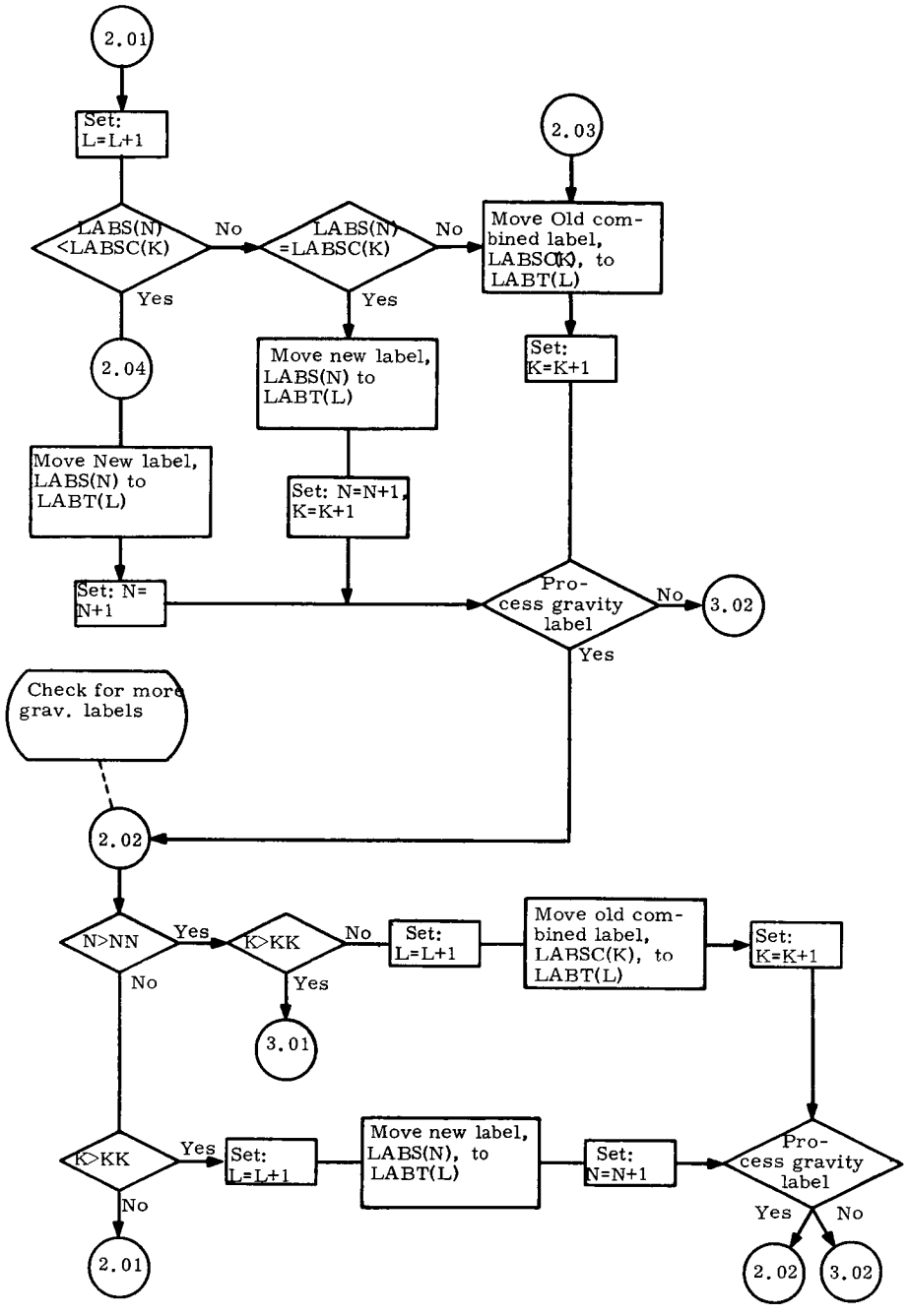
2.01
Set: L=L+1
LABS(N) <LABSC(K)
No
LABS(N) =LABSC(K)
No
2.03
Move Old combined label, LABSC(K), to LABT(L)
Yes
Yes
2.04
Move new label, LABS(N) to LABT(L)
Set: K=K+1
Move New label, LABS(N) to LABT(L)
Set: N=N+1, K=K+1
Set: N= N+1
Process gravity label
No
3.02
Yes
Check for more grav. labels
2.02
N>NN
Yes
K>KK
No
Set: L=L+1
Move old combined label, LABSC(K), to LABT(L)
Set: K=K+1
No
Yes
3.01
K>KK
Yes
Set: L=L+1
Move new label, LABS(N), to LABT(L)
Set: N=N+1
Process gravity label
No
Yes
No
2.01
2.02
3.02

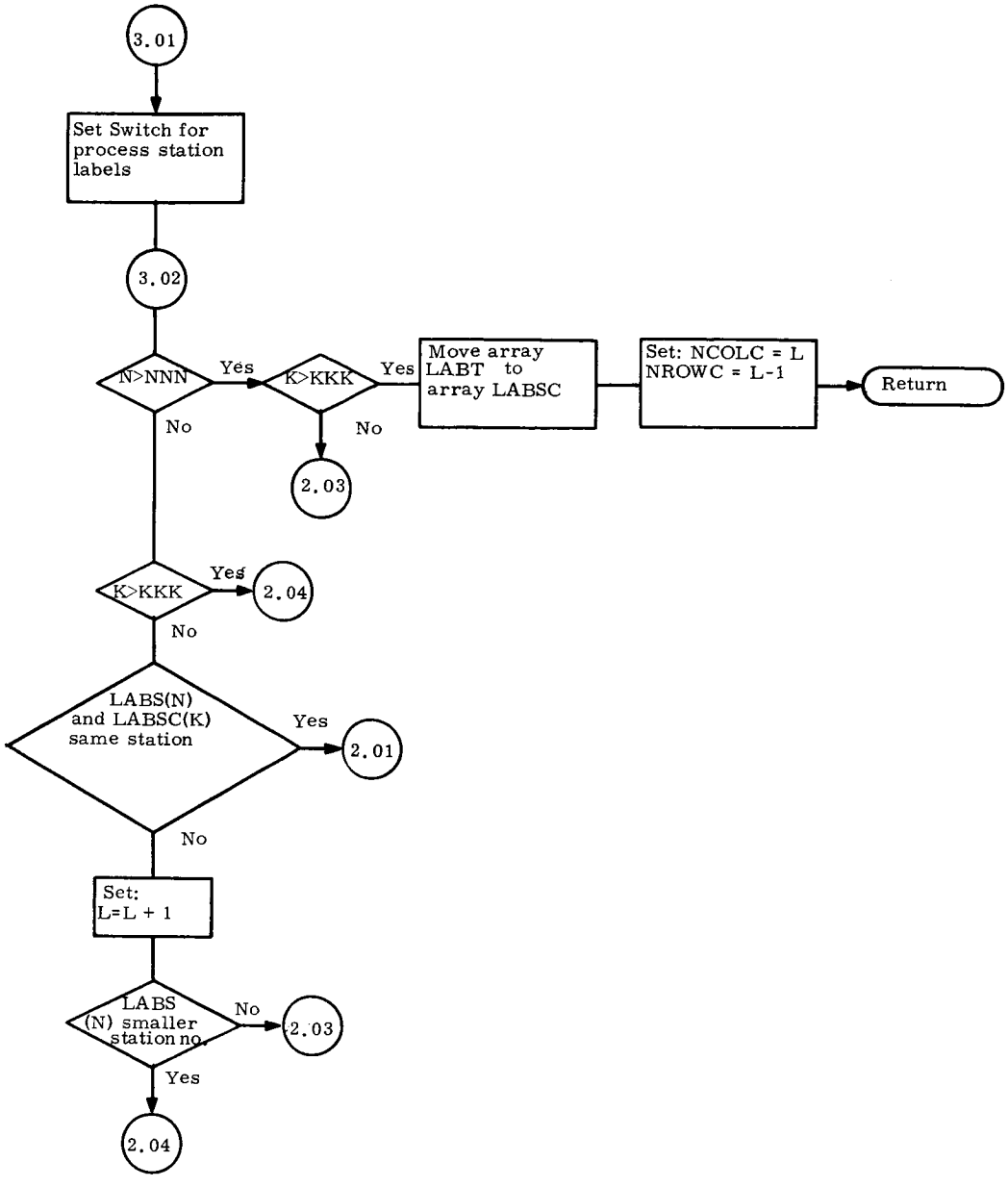
3.01
Set Switch for process station labels
3.02
N>NNN
Yes
K>KKK
Yes
Move array LABT to array LABSC
Set: NCOLC = L
NROWC = L-1
Return
No
No
2.03
K>KKK
Yes
2.04
No
LABS(N) and LABSC(K) same station
Yes
2.01
No
Set: L=L + 1
LABS (N) smaller station no.
No
2.03
Yes
2.04

PART 7

MERGE PROGRAM

TABLE OF CONTENTS

PART 7		Page
SECTION I	INTRODUCTION	1.1
SECTION II	SYSTEM FLOW CHART	
SECTION III	USER INFORMATION	
a)	Input Cards	3.1
b)	Operating Instructions	3.3
c)	Error Messages	3.4
d)	Program Deck Arrangment	3.5
e)	File Block	3.6
f)	Tape Formats	3.7
	Square Matrix	3.8
	Parameter Set Matrix	3.9
g)	Common Definitions	
	PERM	3.10
SECTION IV	SUBROUTINE WRITE-UPS	
	MERGE	4.1
	BEDIT	4.3
	CHECK	4.4
	ERROR	4.5
	MEDIT	4.6
	MINV	4.8
SECTION V	FLOW CHART	
	MERGE	5.1
	BEDIT	5.3
	CHECK	5.4
	ERROR	5.5
	MEDIT	5.6
	MINV	5.10

SECTION I

INTRODUCTION

INTRODUCTION

MERGE is a data handling system, designed to consolidate matrices generated by NORMAL EQUATIONS onto one tape, to be used as input to SOLVE. It will transfer matrices from up to four input tapes to a fifth tape, which may also, if desired, contain matrices to be saved. The output merged tape may be edited in any one of the standard edit formats used in SOLVE. Specified matrices from the four input tapes may be deleted; i.e., they will not be written on the output merged tape. The matrices must be in the standard B-matrix or parameter set matrix formats used by SOLVE. Up to 80 matrices may be written on a single output tape.

Input to MERGE consists of (1) up to four old merged tapes and/or B-matrix tapes generated by NORMAL EQUATIONS, and (2) various input cards indicating program options and other information. A write-up of the input cards appears on page 3.1. Output consists of (1) the new merged tape, and (2) any editing requested. The input tapes are not destroyed.

SECTION II

SYSTEM FLOW CHART

LUNGFISH MERGE SYSTEM FLOWCHART

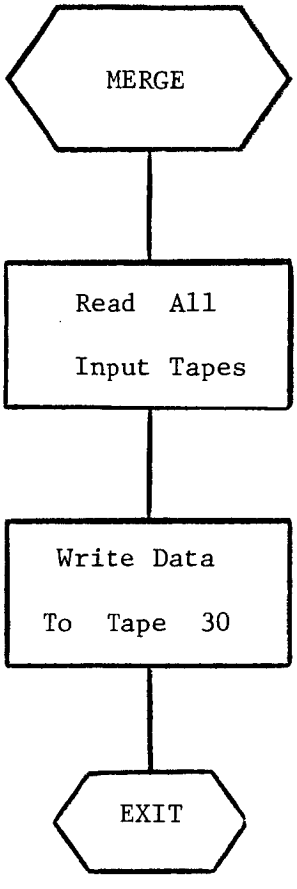

SECTION III

USER INFORMATION

INPUT CARDS

1) Card Type One, Options Card

cc 5	Integer 1, 2, 3 or 4 indicating the number of input tapes.
cc 9-10	Positive integer less than or equal to 80, indicating the maximum number of matrices to appear on output merged tape.
cc 15	Integer edit code for the output merged tape, as follows: 0 - No Editing Required 1 - Unnormalized 2 - Normalized, diagonal elements one 3 - Inverse 4 - Identification Records Only 5 - Normalized Inverse with Standard Deviations (Note: For more detail on edit formats, see the subroutine write-up for EDIT, in SOLVE.)
cc 20	Integer 0 or 1, as follows: 0 - The output tape does not contain matrices to be saved. 1 - The output tape does contain matrices to be saved.
cc 24-25	Positive integer indicating the number of matrices which, if found on one of the four input tapes, will not be written on the merged tape (i. e., will be deleted).

2) Card Type Two, Matrix Deletion List

cc 1-70	Positive integers, in five column fields. These are the matrix identification numbers for those matrices, if any, to be deleted. This list may extend over more than one card. If no matrices are to be deleted, omit this card.

3) Card Type Three, Page Header

cc 1-72 Alpha-numeric data to appear at the top of each page of output if editing is required. If editing is not specified, omit this card.

OPERATING INSTRUCTIONS

1) The system control cards required in the overall deck setup are:

```
$JOB
$SETUP      04
$SETUP      06      (omit if only one input tape)
$SETUP      14      (omit if less than three input tapes)
$SETUP      15      (omit if less than four input tapes)
$SETUP      16
$EXECUTE    IBJOB
$IBJOB
        MERGE decks, binary or source
$DATA
        MERGE data deck
```

2) The tape setup is:

DCS Unit	Tape Function
04	First Input Tape
06	Second Input Tape
14	Third Input Tape
15	Fourth Input Tape
16	Output Tape

If only one tape is used, it is mounted on DCS unit 04; if two are used, they are mounted on units 04 and 06; and so forth.

3) Output consists of the output merged tape on DCS unit 16, and any editing requested.

ERROR LIST

Number	Routine	Meaning
101	MERGE	The number of matrices to be written on the merged tape exceeds 80.
102	MERGE	The number of tapes to be merged is less than one or greater than four.
6	BEDIT	Edit requested of a scratch tape (system or program bug).
103	MEDIT	Edit requested requires the inversion of a matrix of order 83 or greater.

PROGRAM DECK ARRANGEMENT

The MERGE decks do not have to be in any special order, they are currently set up as follows:

.UN18.
.UN20.
.UN28.
.UN29.
.UN30.
MERGE
BEDIT
CHECK
ERROR
MEDIT
MINV

FILE BLOCK PROGRAM OPTIONS

1) Tape 18:
   Filename is "UNIT18"
   Mode is "BIN"
   Unit assignment is "A(1)"

2) Tape 20:
   Filename is "UNIT20"
   Mode is "BIN"
   Unit assignment is "A(3)"

3) Tape 28:
   Filename is "UNIT28"
   Mode is "BIN"
   Unit assignment is "B(1)"

4) Tape 29:
   Filename is "UNIT29"
   Mode is "BIN"
   Unit assignment is "B(2)"

5) Tape 30:
   Filename is "UNIT30"
   Mode is "BIN"
   Unit assignment is "B(3)"

TAPE FORMATS

MERGE uses five tapes, all binary. The input tapes are designated 18, 20, 28 and 29 in the code. Each input tape contains various matrices in the standard format (given in the following pages) used in SOLVE, with an end of logical tape record. The output tape is designated tape 30 in the code. At the start of a MERGE run it may contain matrices and an end of logical tape record, or it may be a scratch tape. (The card input to MERGE specifies which type of output tape is being used.) At the end of a MERGE run, the output tape is in standard format for SOLVE.

STANDARD FORMAT, SQUARE MATRICES

Matrix Identification (ID) Record, One Per Matrix

MNEMONIC	NO. WDS.	FORMAT	CONTENTS
IRT1	1	Integer	"10001"
IDMAT	1	Integer	Matrix Identification Number, 1 to 99998
NRØW	1	Integer	Number of matrix data rows
NCØL	1	Integer	Number of matrix data elements per row, including Right Hand Side element
V1	1 x 2	Double	Total Variance
V2	1 x 2	Double	Dummy Variance word
V3	1 x 2	Double	Arc Variance
NØB	1	Integer	Number of Observations
ITYPE	1	Integer	Code for matrix type, as follows: "1" B-matrix "3" Combined matrix "5" Reduced matrix "6" Inverse combined matrix "7" Suppressed matrix
BNAME	2	Alpha	Alpha-numeric name for matrix, for editing purposes only. It can be blanks.

Matrix Label Record, One Per Matrix

MNEMONIC	NO. WDS.	FORMAT	CONTENTS
IRT2	1	Integer	"10002"
IDUM	1	Integer	Dummy parameter label
LABS	NCØL-1	Integer	Parameter labels

Matrix Data Element Records, NROW Per Matrix

MNEMONIC	NO. WDS.	FORMAT	CONTENTS
IRT3	1	Integer	"10003"
RHS	1 x 2	Double	Right Hand Side element
DATA	(NCØL-1)x 2	Double	Matrix data elements, one matrix row

End of Logical Tape Record, One Per Tape

MNEMONIC	NO. WDS.	FORMAT	CONTENTS
IRT	1	Integer	" - 19991"
IDUM	13	Integer	Dummy words to fill out record

STANDARD FORMAT, PARAMETER SET MATRIX

Parameter Set Identification (ID) Record, One Per Matrix

MNEMONIC	NO. WDS.	FORMAT	CONTENTS
IRT1	1	Integer	"10011"
IDMAT	1	Integer	Matrix Identification Number (same as in matrix ID record for corresponding matrix)
NRØW	1	Integer	"1"
NCØL	1	Integer	Number of elements in parameter set
IDUM	7	Integer	Dummy words to fill record
ITYPE	1	Integer	"8"
BNAME	2	Alpha	Alpha-numeric name for parameter set, for editing only. It may be blanks.

Parameter Set Label Record, One Per Matrix

MNEMONIC	NO. WDS.	FORMAT	CONTENTS
IRT2	1	Integer	"10012"
LABS	NCØL	Integer	Parameter Labels

Parameter Set Data Element Record, One Per Matrix

MNEMONIC	NO. WDS.	FORMAT	CONTENTS
IRT3	1	Integer	"10013"
DATA	NCØL x 2	Double	Parameter Values

PERM COMMON DEFINITIONS

MNEMONIC	NO. WDS.	FORMAT	CONTENTS
B	82 x 2	Double	Right hand side or solution vector for inversion
BNEW	60 x 2	Double	Solution vector from backsubstitution
SIGTØN	1 x 2	Double	Signal to noise ratio
V1	1 x 2	Double	Total variance
V2	1 x 2	Double	Dummy variance words
V3	1 x 2	Double	Arc variance
V1C	1 x 2	Double	Combined matrix total variance
V2C	1 x 2	Double	Combined matrix dummy variance
V3C	1 x 2	Double	Combined matrix arc variance
IRT1	1	Integer	Record type one (ID)
IDMAT	1	Integer	Matrix identification number
NRØW	1	Integer	Number of rows in matrix
NCØL	1	Integer	Number of columns in matrix
NØB	1	Integer	Number of observations
ITYPE	1	Integer	Matrix type
BNAME	2	Alpha	Matrix alpha-numeric name
IRT2	1	Integer	Record type two (label)
LABS	101	Integer	Parameter labels record
LABSI	82	Integer	Labels of inverted matrix
NRØWI	1	Integer	Number of rows in inverted matrix
LABSN	60	Integer	Labels of parameters solved for by backsubstitution
NRØWN	1	Integer	Number of elements in LABSN
NGRAV	1	Integer	Number of gravity parameters
NSTAT	1	Integer	Number of station parameters
NARC	1	Integer	Number of arc parameters
JPAGE	1	Integer	Printed output page number

MNEMONIC	NO. WDS.	FORMAT	CONTENTS
LINE	1	Integer	Printed output line number
NØREC	1	Integer	Number of backspaces necessary to position tape at 10001 record
NØREC2	1	Integer	Number of backspaces necessary to position tape at 10001 record
ØBVS	1	Real	Total number of observations
ALPHA	12	Alpha	Page header for printed output
IDCØMB	1	Integer	Matrix identification number for combined matrix
NRØWC	1	Integer	Number of rows in combined matrix
NCØLC	1	Integer	Number of columns in combined matrix
NØBC	1	Integer	Number of observations in combined matrix
ITYPEC	1	Integer	"3"
BNAMEC	2	Alpha	Combined matrix alpha name
LABSC	101	Integer	Parameter label record of combined matrix

SECTION IV

SUBROUTINE WRITE-UPS

NAME	MERGE	
PURPOSE	Overall control program for the B matrix tape MERGE system.	
CALLS	BEDIT	Binary tape to tape routine
	ERROR	Error exit from MERGE
	MEDIT	Matrix edit routine
OPTIONS	IEDIT	Edit option, indicates either no editing, or one of five edit formats (see subroutine write up for MEDIT)
	IOLDM	Save old matrices option, indicates whether or not there are matrices to be saved on the output tape.
	NODELT	Deletion option, indicates whether or not certain matrices are not to be written from the input tapes to the output tape.
INPUT	NOTAP	Number of input tapes, one through four.
	IDELT	List of matrices to be deleted, if any.
	ALPHA	Alpha-numeric page header for printed output, if any.
OUTPUT	Merged tape on tape 30	
TAPES	1) USED	18, 20, 28 and 29, input tapes. 30 is the output tape.
	All tapes are rewound at the beginning and end of MERGE.	

ERROR CHECKS

Error number 101 indicates too many matrices were to be merged onto one output tape.

Error number 102 indicates too many input tapes requested

NAME	BEDIT (NØREC, NØTAP, ITYP)		
PURPOSE	Writes a matrix to be edited onto tape 30		
CALLED BY	MAIN	Overall control program for SØLVE	
CALLS	ERRØR	Handles error exits from SØLVE	
INPUT	NØREC	The number of times a tape must be back-spaced to position it at the X0001 (ID) record	
	NØTAP	The logical tape number of the input matrix	
	ITYP	An integer indicating the desired format for the edited matrix. This is read from input card type three, the edit card.	
OUTPUT	The matrix, with ITYPE modified, written in standard format on tape 30		
TAPES	USED	30	Output, edit tape
		NØTAP	Input, holds the matrix to be edited
	START	30	Before the old -49991 record
		NØTAP	NØREC records past the ID, (X0001) record of the input matrix
	END	30	Before the new -49991 record
		NØTAP	After the last 10003 record
ERROR CHECKS	Error number 6 indicates that NØTAP is not 18, 20, 28 or 29		
NOTES	The code word ITYPE, used by the EDIT program to determine the type of matrix and the edit format, is computed as follows: ITYPE = 100 * ITYP + ITYPE, where the old ITYPE is as it appears in the standard matrix.		

NAME	CHECK(NØLIN)	
PURPOSE	Controls the page feeding and writes the page header for printed output	
CALLED BY	MAIN	Overall control program for SØLVE
	MINV	Matrix inversion routine
	INCK	Checks input format and values
	ØPARC	Prints and punches arc parameter output
	ØPGRAV	Prints and punches gravity parameter output
	ØPSTAT	Prints and punches station parameter output
INPUT	NØLIN	The number of lines to be printed
	LINE	The number of lines which appear on the current page
	ALPHA	A twelve-word array consisting of the page header
	JPAGE	The current page number
OUTPUT	LINE is incremented. If the new LINE is greater than forty-five, a new page is started and JPAGE is incremented.	

NAME	ERROR (NERR)	
PURPOSE	Handles error exits from SØLVE	
CALLED BY	MAIN	Main control routine for SØLVE
	BACKSB	Backsubstitution routine
	BEDIT	Writes matrices to the Edit tape
	CØMB	Matrix combination routine
	ELIM	Matrix elimination routine
	ØPARC	Prints and punches arc parameter output
	INCK	Checks input format and values
INPUT	NERR	Error number
	PERM	The matrix ID and label records are in PERM common, as usual

OUTPUT The following messages are printed:

JOB TERMINATED DUE TO ERROR NUMBER XXXX.

IDENT	NRØWS	NCØLS	BNAME	TYPE
XXXXX	XXXXX	XXXXX	Alpha	X

The "XXXXX" are the appropriate numbers.

NAME	MEDIT		
PURPOSE	This routine "prints" (i.e., writes on the systems output tape) all matrices on tape 30, in a specified format.		
CALLED BY	MERGE	Overall control program of MERGE	
CALLS	MINV	Matrix inversion routine.	
OPTIONS	ITYP	1	Print matrix as is; i.e., unnormalized. The rectangular matrices (parameter set matrices and back-substitution matrices) may only be edited in the unnormalized format.
		2	Print normalized matrix; i.e., the diagonal elements are set to one.
		3	Print the inverse of the input matrix, with the solution vector as the right hand side.
		4	Print the Identification and Label records only; i.e., records X0001 and X0002.
		5	Print the normalized inverse matrix. Also print the standard deviation vector; i.e., the square roots of the diagonal elements of the inverse matrix.

OUTPUT	The matrices in the desired format on the systems output tape.		
TAPES	USED	30	Input, edit tape
	START	30	Rewound
	END	30	Rewound

NAME	MINV (N)	
PURPOSE	Inverts and solves a matrix	
METHOD	A Gauss-Jordan elimination, with a pivot search on the diagonal elements	
CALLED BY	INVR	Control program for matrix inversion
	EDIT	Edits matrices for printing
CALLS	CHECK	Controls page spacing of printed output
INPUT	N	Order of matrix, not to exceed 82
	A	Two-dimensional array containing the matrix to be inverted
	B	The Right Hand Side vector
OUTPUT	A	Inverted matrix
	B	The Solution vector
ERROR CHECKS	If a pivot element is found which is negative or zero, a message is printed indicating that the matrix is not positive definite and in which row the bad pivot occurred. However, the run continues.	

SECTION V

FLOW CHARTS

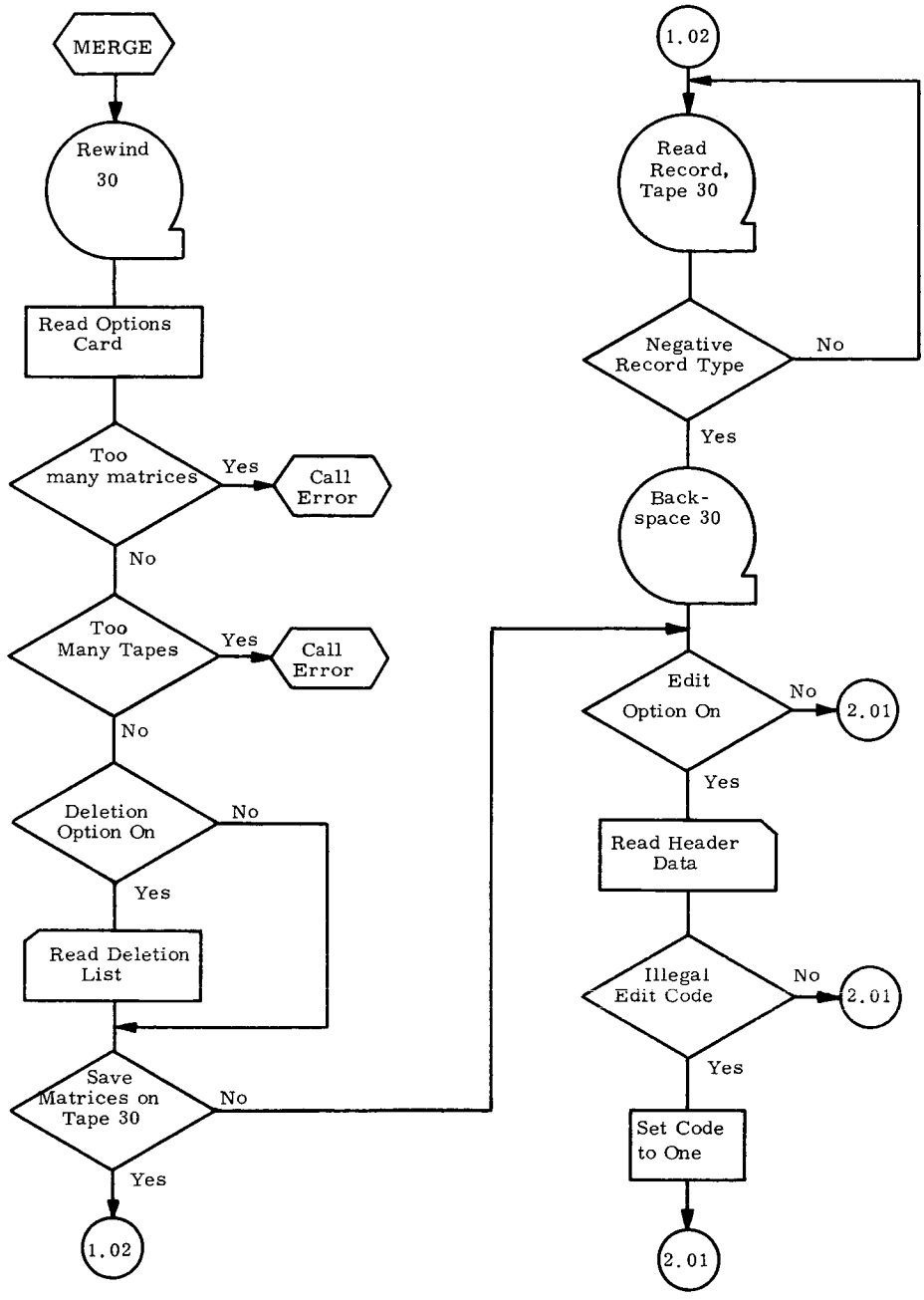
MERGE
Rewind 30
Read Options Card
Too many matrices
Yes
Call Error
No
Too Many Tapes
Yes
Call Error
No
Deletion Option On
No
Yes
Read Deletion List
Save Matrices on Tape 30
No
Yes
1.02
1.02
Read Record, Tape 30
Negative Record Type
No
Yes
Back-space 30
Edit Option On
No
2.01
Yes
Read Header Data
Illegal Edit Code
No
2.01
Yes
Set Code to One
2.01

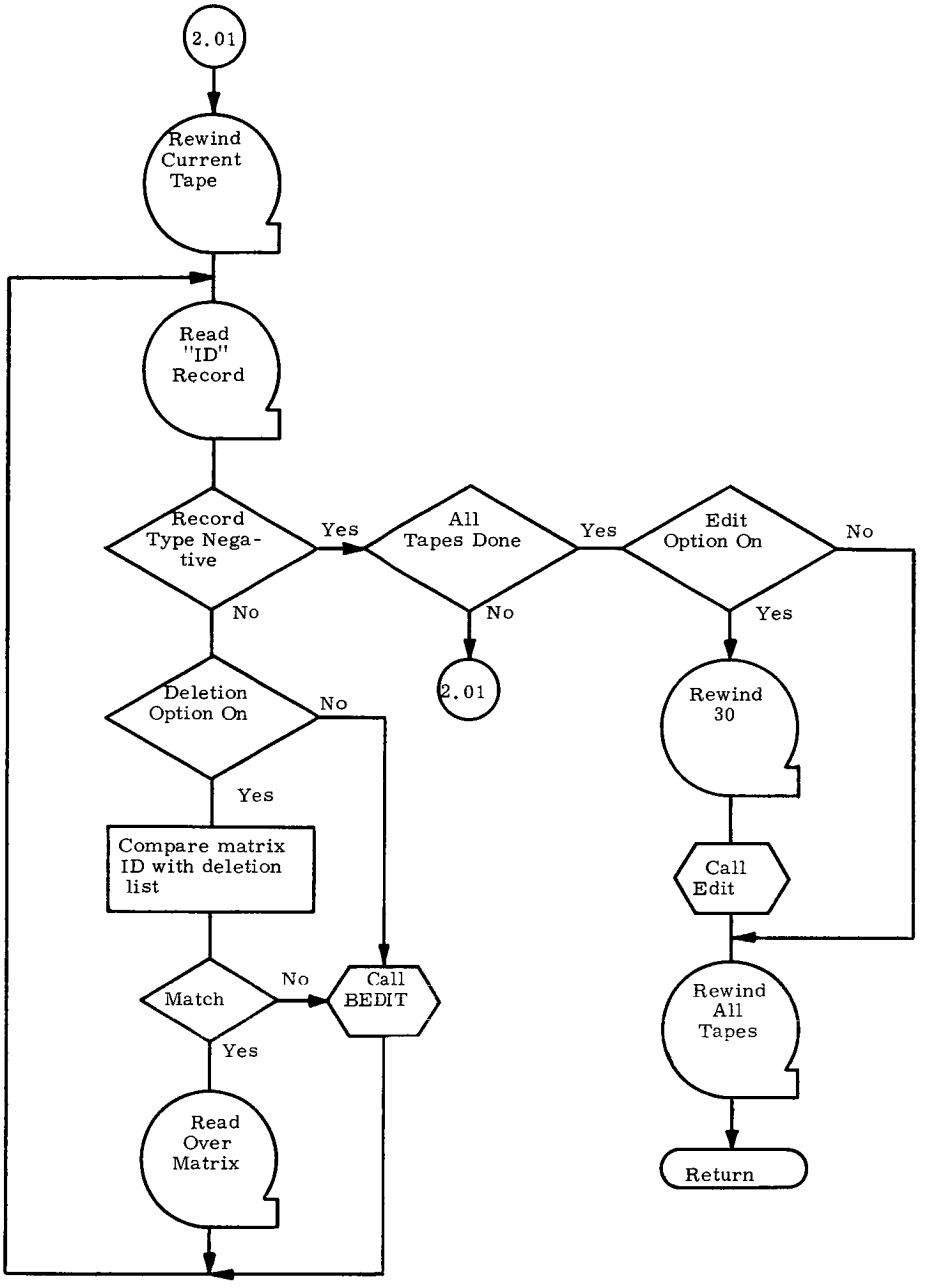
2.01
Rewind Current Tape
Read "ID" Record
Record Type Nega-tive
Yes
All Tapes Done
Yes
Edit Option On
No
No
No
Yes
2.01
Deletion Option On
No
Rewind 30
Yes
Compare matrix ID with deletion list
Call Edit
Match
No
Call BEDIT
Rewind All Tapes
Yes
Read Over Matrix
Return

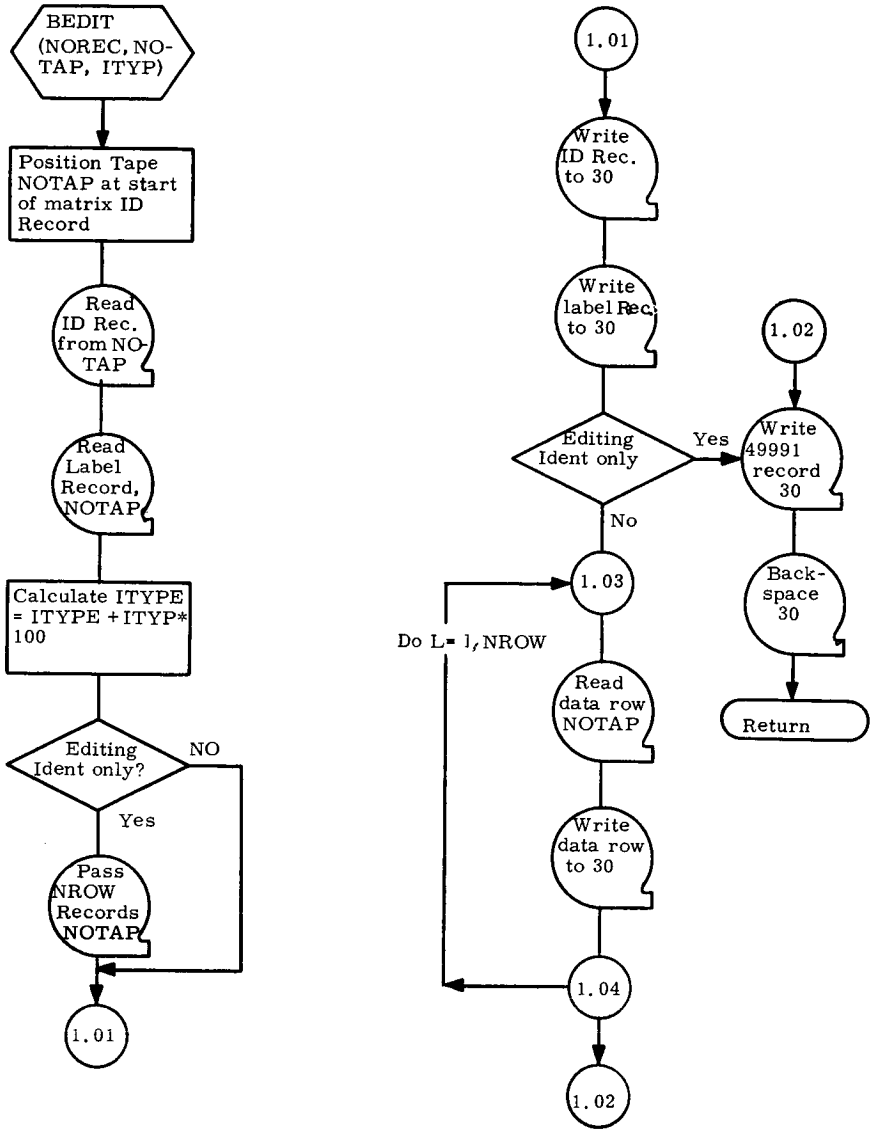
BEDIT (NOREC, NO-TAP, ITYP)
Position Tape NOTAP at start of matrix ID Record
Read ID Rec. from NO-TAP
Read Label Record, NOTAP
Calculate ITYPE = ITYPE + ITYP* 100
Editing Ident only?
NO
Yes
Pass NROW Records NOTAP
1.01
1.01
Write ID Rec. to 30
Write label Rec. to 30
Editing Ident only
Yes
No
1.02
Write 49991 record 30
Back-space 30
Return
1.03
Do L= 1, NROW
Read data row NOTAP
Write data row to 30
1.04
1.02

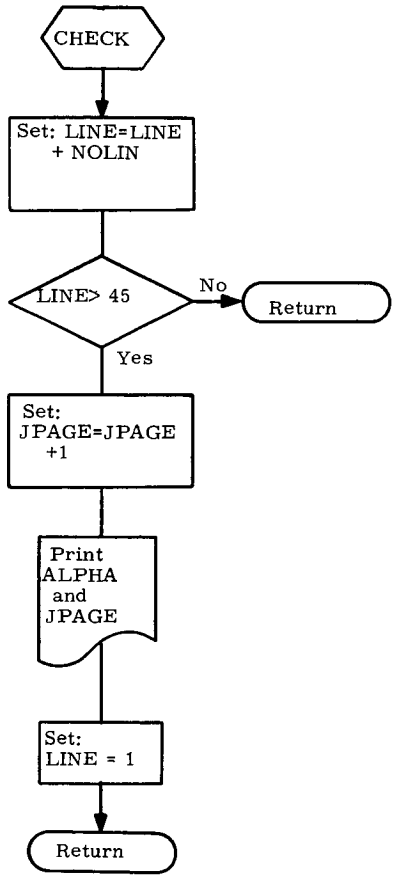
CHECK
Set: LINE=LINE + NOLIN
LINE> 45
No
Return
Yes
Set: JPAGE=JPAGE +1
Print ALPHA and JPAGE
Set: LINE = 1
Return

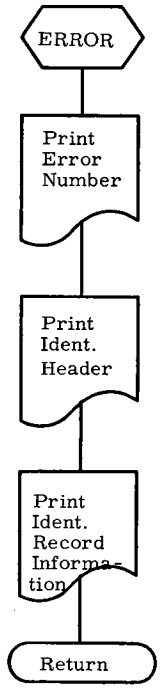
ERROR
Print Error Number
Print Ident. Header
Print Ident. Record Information
Return

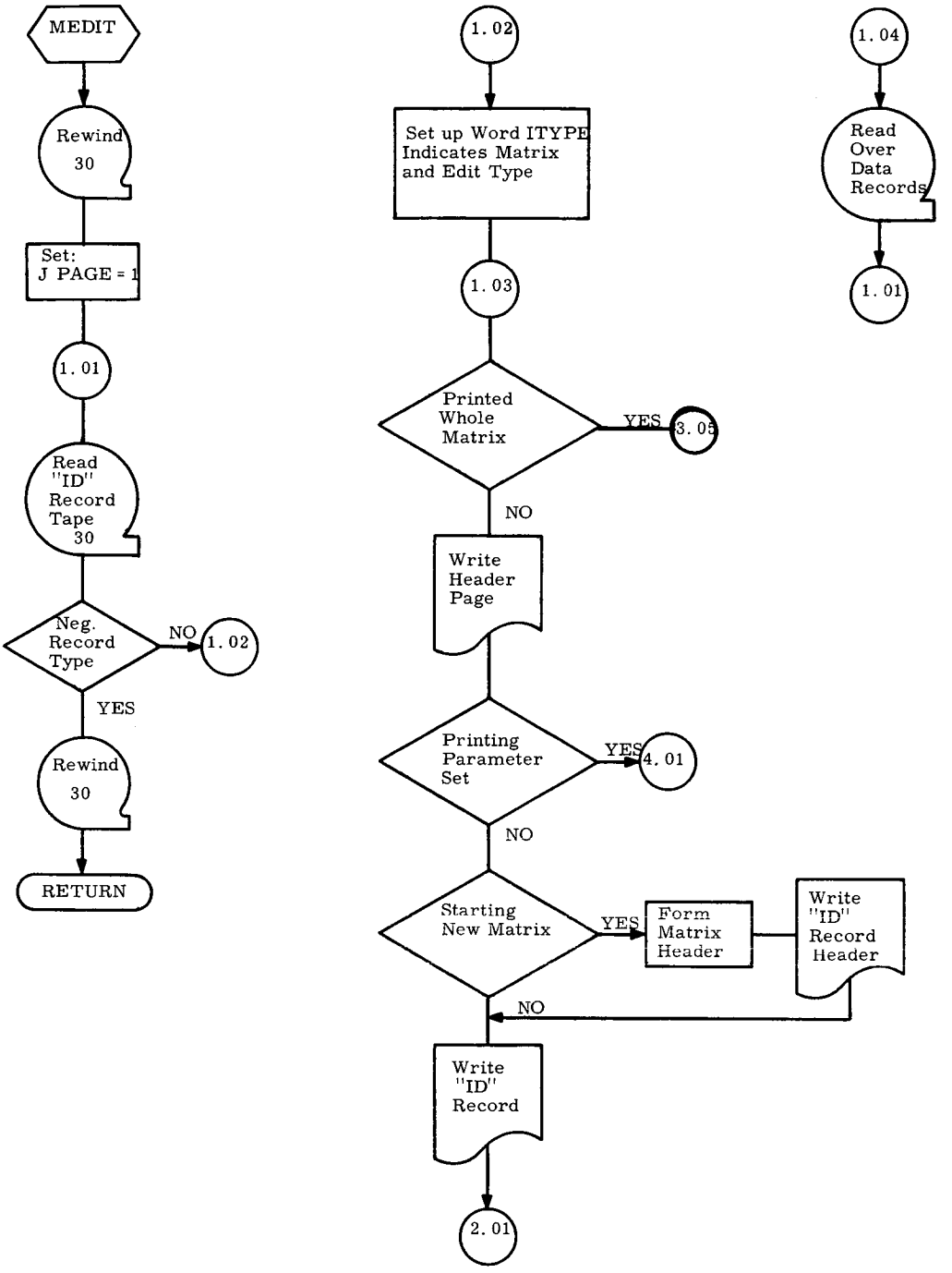
MEDIT
Rewind 30
Set: J PAGE = 1
1.01
Read "ID" Record Tape 30
Neg. Record Type
NO
1.02
YES
Rewind 30
RETURN
1.02
Set up Word ITYPE Indicates Matrix and Edit Type
1.03
Printed Whole Matrix
YES
3.05
NO
Write Header Page
Printing Parameter Set
YES
4.01
NO
Starting New Matrix
YES
Form Matrix Header
Write "ID" Record Header
NO
Write "ID" Record
2.01
1.04
Read Over Data Records
1.01

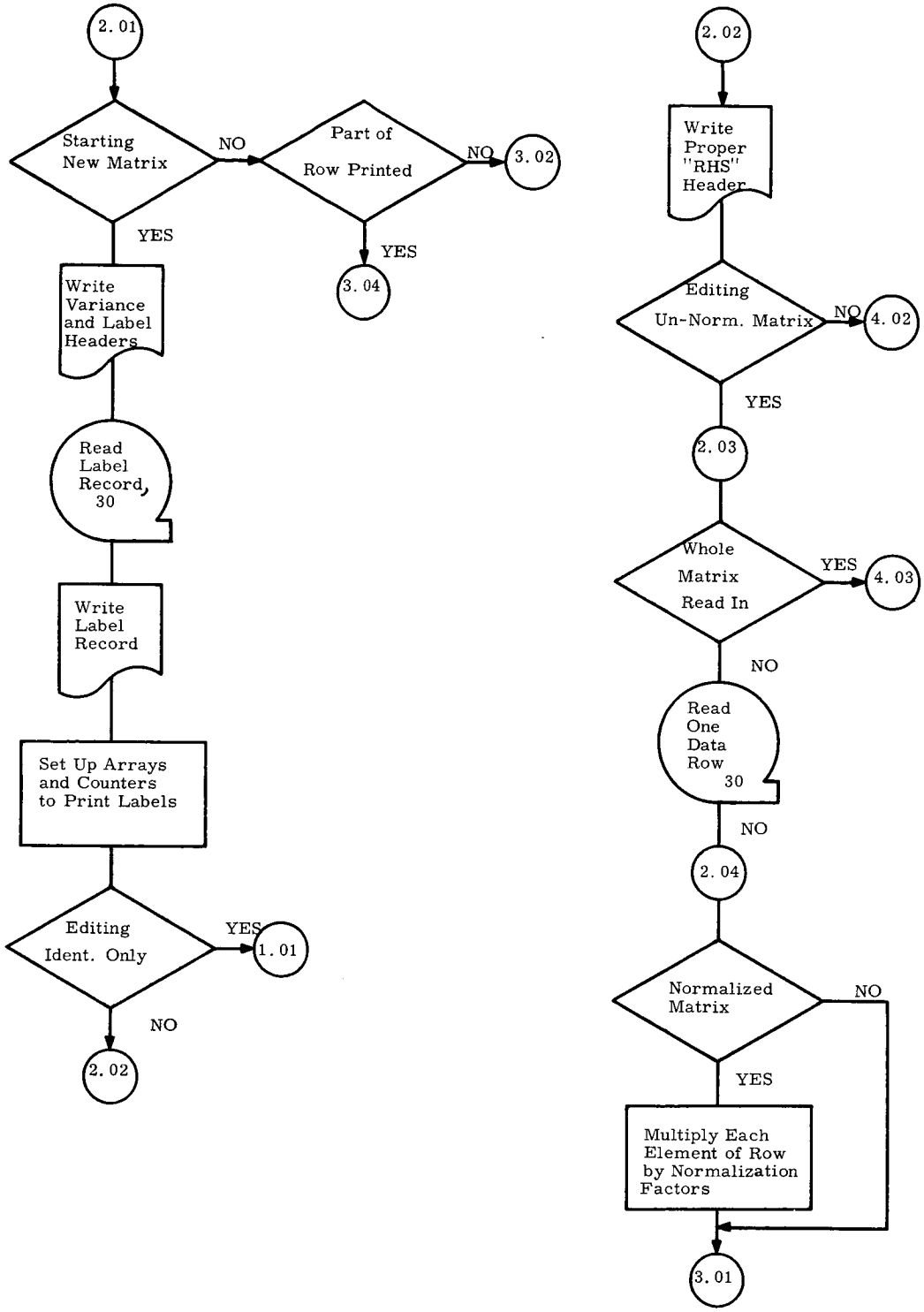
2.01
Starting New Matrix
NO
Part of Row Printed
NO
3.02
YES
YES
3.04
Write Variance and Label Headers
Read Label Record, 30
Write Label Record
Set Up Arrays and Counters to Print Labels
Editing Ident. Only
YES
1.01
NO
2.02
2.02
Write Proper "RHS" Header
Editing Un-Norm. Matrix
NO
4.02
YES
2.03
Whole Matrix Read In
YES
4.03
NO
Read One Data Row 30
NO
2.04
Normalized Matrix
NO
YES
Multiply Each Element of Row by Normalization Factors
3.01

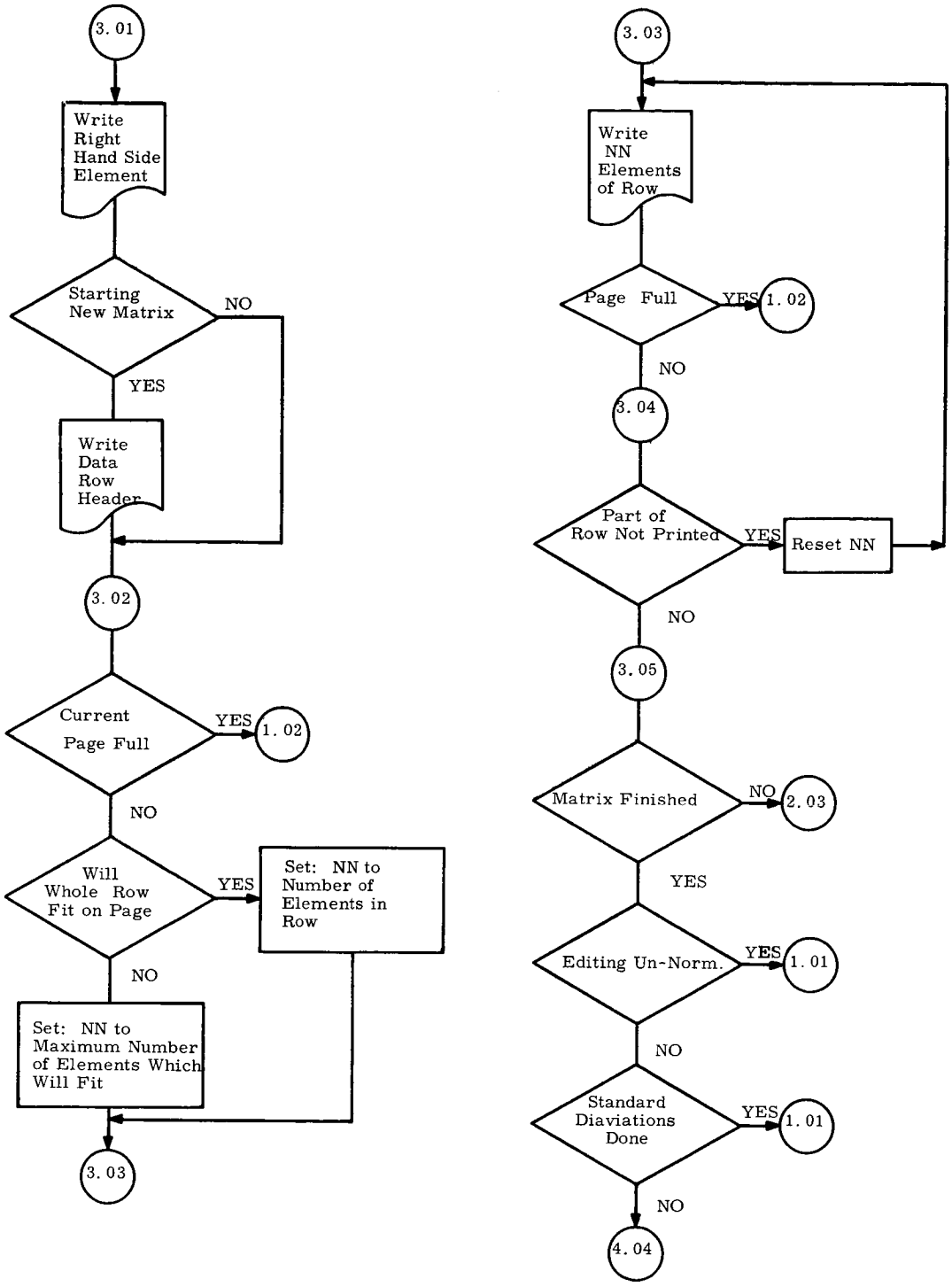
3.01
Write Right Hand Side Element
Starting New Matrix
NO
YES
Write Data Row Header
3.02
Current Page Full
YES
1.02
NO
Will Whole Row Fit on Page
YES
Set: NN to Number of Elements in Row
NO
Set: NN to Maximum Number of Elements Which Will Fit
3.03
3.03
Write NN Elements of Row
Page Full
YES
1.02
NO
3.04
Part of Row Not Printed
YES
Reset NN
NO
3.05
Matrix Finished
NO
2.03
YES
Editing Un-Norm.
YES
1.01
NO
Standard Diaviations Done
YES
1.01
NO
4.04

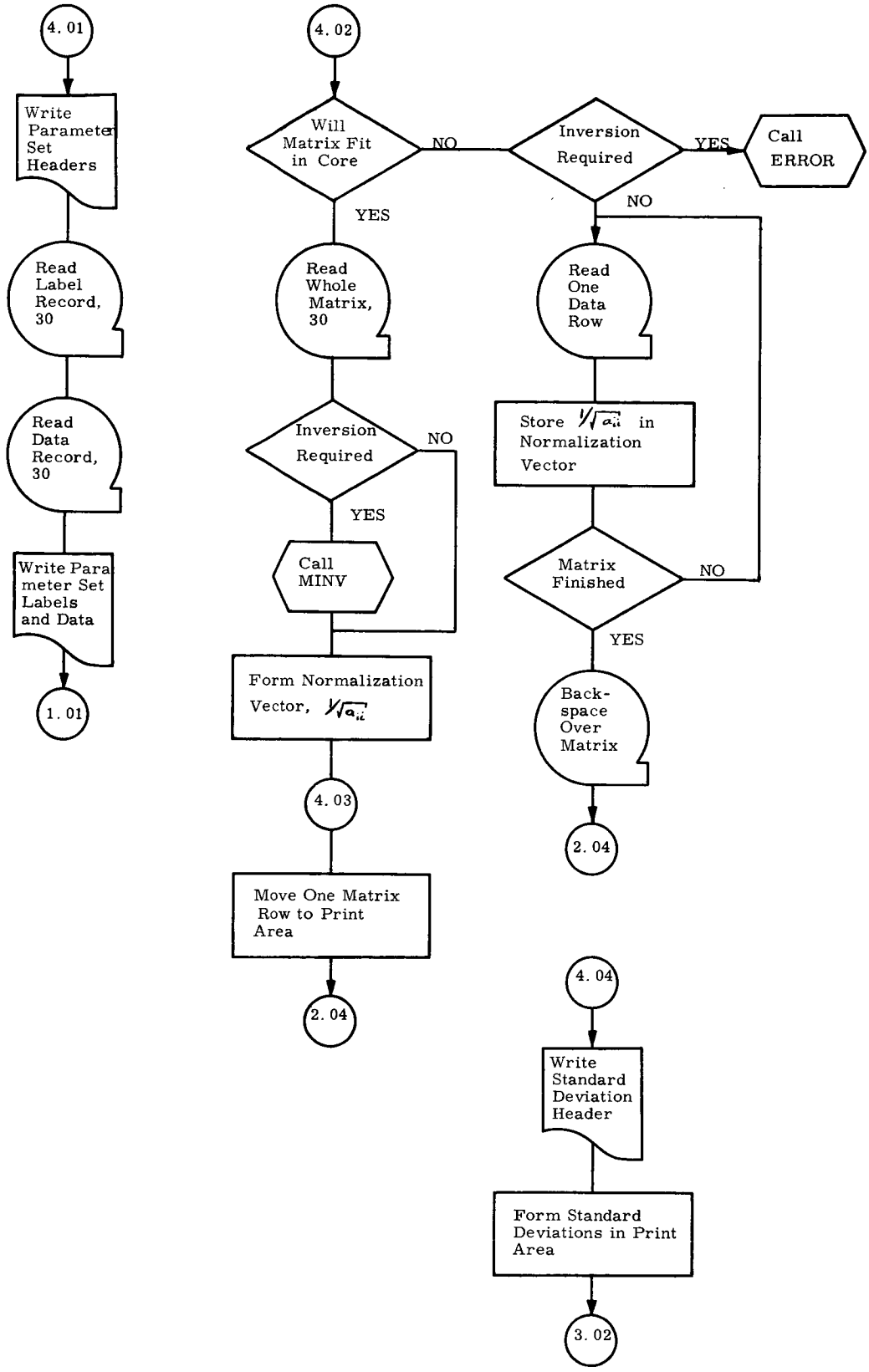
4.01
Write Parameter Set Headers
Read Label Record, 30
Read Data Record, 30
Write Parameter Set Labels and Data
1.01
4.02
Will Matrix Fit in Core
NO
YES
Inversion Required
YES
Call ERROR
NO
Read Whole Matrix, 30
Read One Data Row
Inversion Required
NO
YES
Call MINV
Store $1/\sqrt{a_{ii}}$ in Normalization Vector
Matrix Finished
NO
YES
Form Normalization Vector, $1/\sqrt{a_{ii}}$
Back-space Over Matrix
2.04
4.03
Move One Matrix Row to Print Area
2.04
4.04
Write Standard Deviation Header
Form Standard Deviations in Print Area
3.02

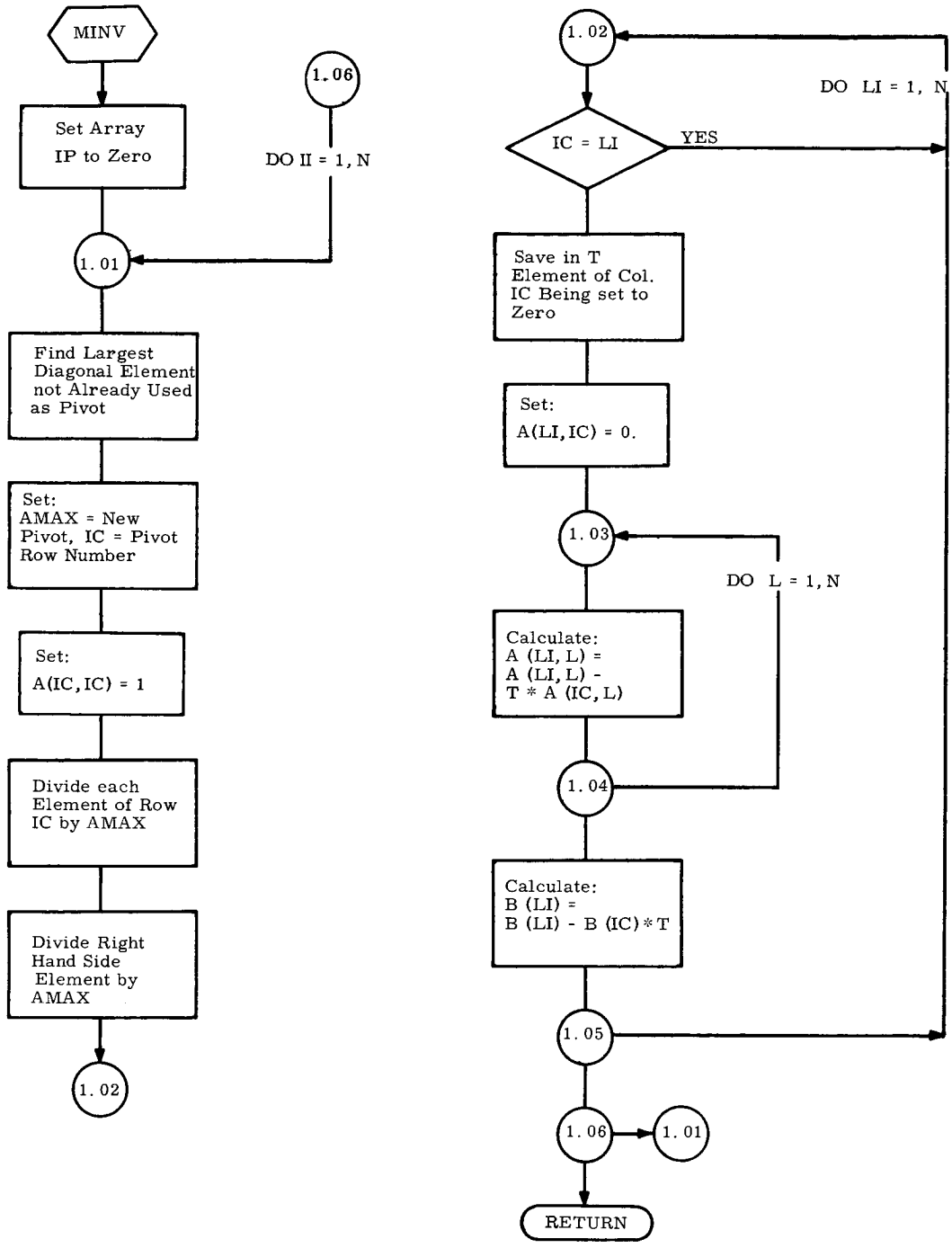
MINV
Set Array IP to Zero
1.06
DO II = 1, N
1.01
Find Largest Diagonal Element not Already Used as Pivot
Set: AMAX = New Pivot, IC = Pivot Row Number
Set: A(IC, IC) = 1
Divide each Element of Row IC by AMAX
Divide Right Hand Side Element by AMAX
1.02
1.02
DO LI = 1, N
IC = LI
YES
Save in T Element of Col. IC Being set to Zero
Set: A(LI, IC) = 0.
1.03
DO L = 1, N
Calculate: A (LI, L) = A (LI, L) - T * A (IC, L)
1.04
Calculate: B (LI) = B (LI) - B (IC) * T
1.05
1.06
1.01
RETURN

PART 8

COVARIANCE MATRIX PROGRAM

TABLE OF CONTENTS

PART 8		Page
SECTION I	INTRODUCTION	1.1
SECTION II	SYSTEM FLOW CHART	2.1
SECTION III	USER INFORMATION	
a)	Input cards	3.1
b)	Operating Instructions	3.2
c)	Program Restrictions	3.3
d)	Error messages	3.4
e)	Program deck arrangment	3.5
f)	File block	3.6
g)	Tape formats	
	Trajectory Tape	3.7
h)	Common definitions	
	HEAD	3.10
	Other Mnemonics	3.12
SECTION IV	SUBROUTINE WRITE-UPS	
	MAIN	4.1
	EREAD	4.3
	ERROR	4.4
	FRMR	4.5
	INTERP	4.6
	INTPAR	4.7
	INVRT	4.8
	MULT	4.9
	ORBTOX	4.10
	OUTPUT	4.11
	ROTV	4.12
	STATE	4.13
	TIMCRD	4.14
	TJECT	4.15
	TREAD	4.16
	TRNSF	4.17
	XTOORB	4.18

SECTION V FLOWCHARTS

	Page
MAIN	1
EREAD	3
ERROR	4
FRMR	5
INTERP	6
INTPAR	7
INVT	8
MULT	9
ORBTOX	10
OUTPUT	11
ROTV	12
STATE	13
TIMCRD	14
TJECT	15
TREAD	16
TRNSF	18
XTOORB	19

SECTION I

INTRODUCTION

INTRODUCTION

When required, the covariance matrix on the satellite state may be obtained at any time using the covariance matrix at the beginning of the arc and the integrated values of the perturbation equations. The program accomplishing this is not in one sense a part of the LUNGFISH program, since it is needed neither in performing the solution nor in iterating to a new solution. It is used to provide the measure of the uncertainty in the estimated state at any required time.

SECTION II

SYSTEM FLOW CHART

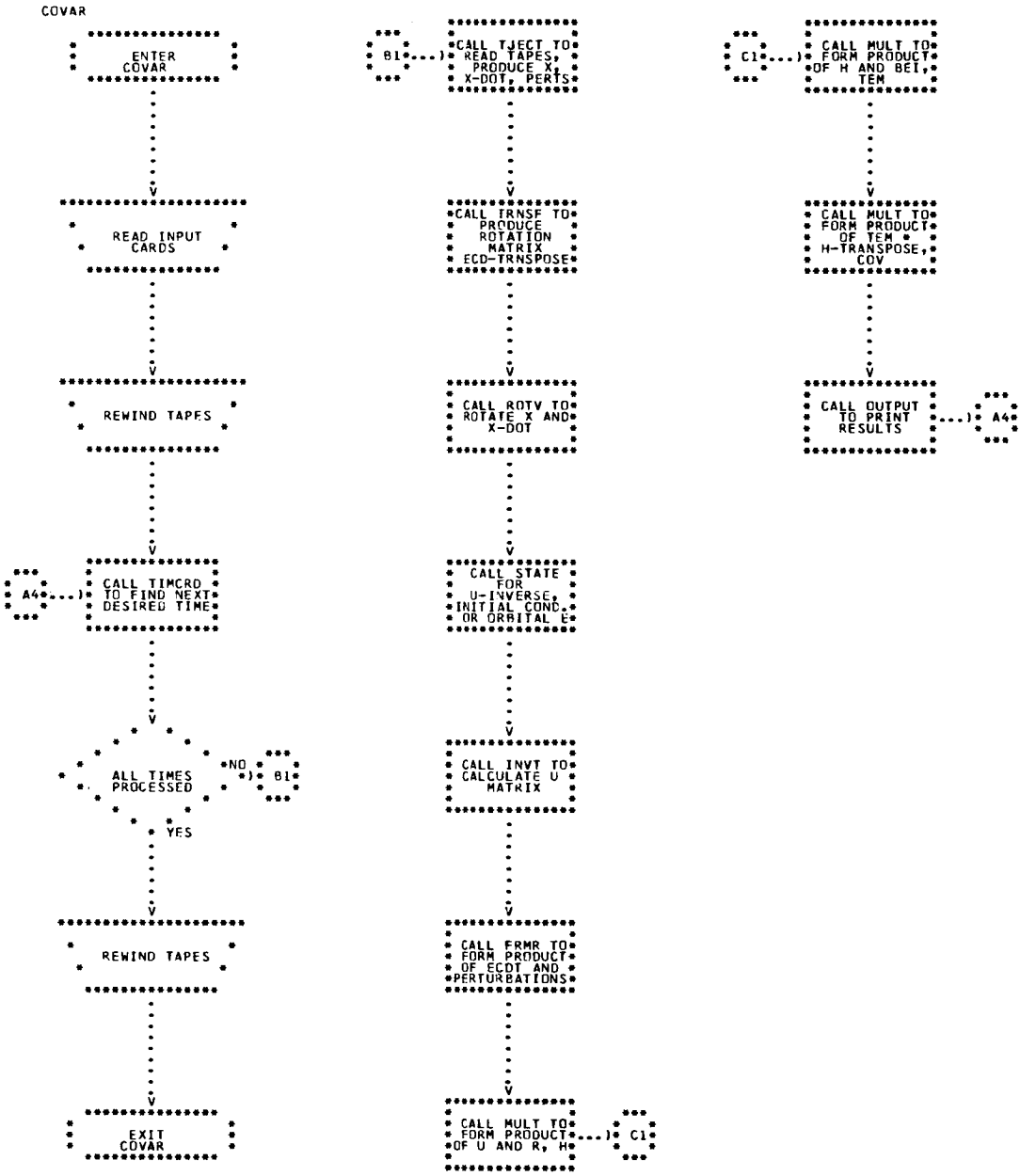
COVAR
ENTER COVAR
READ INPUT CARDS
REWIND TAPES
CALL TIMCRD TO FIND NEXT DESIRED TIME
A4
ALL TIMES PROCESSED
NO
B1
YES
REWIND TAPES
EXIT COVAR
B1
CALL TJECT TO READ TAPES, PRODUCE X, X-DOT, PERTS
CALL TRNSF TO PRODUCE ROTATION MATRIX ECD-TRNSPOSE
CALL ROTV TO ROTATE X AND X-DOT
CALL STATE FOR U-INVERSE, INITIAL COND. OR ORBITAL E
CALL INVT TO CALCULATE U MATRIX
CALL FRMR TO FORM PRODUCT OF ECDT AND PERTURBATIONS
CALL MULT TO FORM PRODUCT OF U AND R, H
C1
C1
CALL MULT TO FORM PRODUCT OF H AND BEI, TEM
CALL MULT TO FORM PRODUCT OF TEM H-TRANSPOSE, COV
CALL OUTPUT TO PRINT RESULTS
A4

SECTION III

USER INFORMATION

INPUT CARDS

1) Card type One, trajectory identification number

cc 1-5	Integer trajectory tape identification number

2) Card type Two, run time limits

cc 1-24	Double precision start time for run, in seconds from the beginning of the year
cc 25-48	Double precision final time for run, in seconds from the beginning of the year
cc 49-72	Double precision gravity of the moon

3) Card type Three, state inverse matrix BEI(6,6)

cc 1-24	Double Precision BEI(1,J)
cc 25-48	Double Precision BEI(2,J)
cc 49-72	Double Precision BEI(3,J)
cc 1-24	Double Precision BEI(4,J)
cc 25-48	Double Precision BEI(5,J)
cc 49-72	Double Precision BEI(6,J)

J=1,6 Card type three consists of two cards. It takes a total of twelve cards to hold the BEI matrix.

4) Card type Four, Debug print options

The following are logical options, with a "T" (True) indicating debug printout desired, and an "F" (False) or a blank indicating no printout desired.

cc 5	Print the input BEI matrix
cc 10	Print the input Time; and an arc parameter label from the trajectory tape
cc 15	Print the G array from TJECT
cc 20	Print the unrotated position and velocity arrays
cc 25	Print the perturbations matrix
cc 30	Print the ECD^T matrix
cc 45	Print the ORBPAR and ORBDOT arrays from state
cc 50	Print the U^{-1} matrix
cc 55	Print the R matrix
cc 60	Print the H matrix

5) Card type Five, Time Cards

cc 1-5	Integer card type, any integer >0
cc 6-30	Double precision time, in seconds from the start of the year

6) Card type Six, End of Times card

cc 1-5	Integer card type, any integer< 1

OPERATING INSTRUCTIONS

1) The system control cards required in the overall deck setup are:

```
$JOB

$SETUP       04

$EXECUTE     IBJOB

$IBJOB

         COVAR decks, source or binary

$DATA

         COVAR data deck
```

2) The tape setup is:

DCS Unit	Tape Function
04	Input trajectory tape
16	Scratch tape, or disk file

3) Output consists only of printing.

PROGRAM RESTRICTIONS

1) The time period over which the covariance matrices are to be computed may not span a year, i.e., year cross-over may not occur.

ERROR MESSAGES

NUMBER	SUBROUTINE	MEANING
1	TJECT	Illegal record type on the trajectory tape
2	TREAD	Trajectory tape data records are out of sort, i.e., the times are wrong
4	EREAD	Illegal record type on ephermis tape
5	MAIN	Year cross over requested, COVAR cannot process data with year-crossover
6	MAIN	Ten of the requested times were not on the trajectory tape
7	MAIN	Ten of the U^{-1} matrices generated could not be inverted

PROGRAM DECK ARRANGEMENT

The decks for COVAR should be in approximately the following order

.UN18.
.UN30.
MAIN
ERROR
FRMR
INVT
MULT
OUTPUT
ROTV
TIMCRD
TRNSF
STATE
XTOORB
ORBTOX
INTPAR
*TJECT
TREAD
INTERP
EREAD

*The four following decks must be in this order.

FILE BLOCK PROGRAM OPTIONS

1) Tape 18:
   Filename is "UNIT18"
   Mode is "BIN"
   Unit assignment is "A(1)"

2) Tape 30
   Filename is "UNIT30"
   Mode is "BIN"
   Unit assignment is "B(3)"

TRAJECTORY AND PERTURBATION TAPE

RECORD TYPES

100	Trajectory tape header
110	Parameter and label record
120	Ephemeris header
130	Ephemeris records
140	Trajectory and perturbation records
150	Trajectory end of file record

FORMAT

RECORD TYPE	# Of WORDS	MN	FORMAT	CONTENT
100	1	ITYPET	INTEGER	Record type
	1	IDENTT	INTEGER	Identification number for arc
	1	ISATNO	INTEGER	Satellite number
	1	NUMGA	INTEGER	Number of partials calculated by INTEGRATION
	1	NUMGRV	INTEGER	Number of gravity partials calculated by INTEGRATION
	1	ISYR	INTEGER	Start year of ARC
	2	ARCSEC	DOUBLE	Start time of arc (seconds from beginning of year)
	2	ARCEND	DOUBLE	Time of last record (seconds from beginning of current year)
	2	DURA	DOUBLE	Duration of arc
	2	DELTAT	DOUBLE	Interval of storage

RECORD TYPE	# of WORDS	MN	FORMAT	CONTENT
110	1	ITYPET	INTEGER	Record type
	NUMGAx2	PARAMS	DOUBLE	Initial parameter values for variables in integration
	NUMGA	LABELS	INTEGER	Labels for parameters used in integration
120	1	ITYPET	INTEGER	Record type
	1	IDAY1	INTEGER	First day on tape (days from year start)
	1	IDAYS	INTEGER	Number of days of data equal number of Ephemeris records
	2	YRSECS	DOUBLE	Number of seconds in start year
	2	H1	DOUBLE	H for start year
	2	H2	DOUBLE	H for second year
130	1	ITYPET	INTEGER	Record type
	2	TZERO	DOUBLE	Base time for interpolation
	3x9x2	PXE	DOUBLE	INTERPOLATION Polynominal coefficients for earth-moon vector PXE(I,J)=I,3 J=1,9
	3x5x2	PCDTR	DOUBLE	Interpolation polynominal coefficients for Δh PBTR(I)I=1,5
	3x3x5x2	PECDTR	DOUBLE	PECDTR (I,II,J) I=1,3 II=1,3 J=1,5

RECORD TYPE	# of WORDS	MN	FORMAT	CONTENT
140	1	ITYPET	INTEGER	Record type
	2	TIMET	DOUBLE	Time of (position, acceleration and perturbations) seconds from beginning of year
	3x2	XSAT	DOUBLE	Position of satellite at TIMET (KM)
	3x2	ASAT	DOUBLE	Acceleration of satellite at TIMET(KM)
	3xNUMGAx2	P	DOUBLE	Array of perturbations
150	1	ITYPET	INTEGER	Record type
	2	TIMET	DOUBLE	Time of last trajectory and perturbation set
	3x2	XSAT	DOUBLE	Last position
	3x2	ASAT	DOUBLE	Last acceleration
	3xNUMGAx2	P	DOUBLE	Last array of perturbations

HEAD COMMON DEFINITIONS

MNEMONIC	# of WORDS	FORMAT	CONTENTS
ARCSEC	1x2	DOUBLE	Start time of arc, in seconds
ARCEND	1x2	DOUBLE	Time of last record on trajectory tape
DELTAT	1x2	DOUBLE	Interval of storage
YRSECS	1x2	DOUBLE	Number of seconds in start year
TIME4	1x2	DOUBLE	Time of the fourth time step, in seconds
TIMET	8x2	DOUBLE	Table of eight time steps corresponding to trajectory data
F	(8x3x77)x2	DOUBLE	Eight consecutive trajectory and perturbation arrays
DURA	1x2	DOUBLE	Duration of arc
S	1x2	DOUBLE	Variable input parameter for interpolation routine
ISPAN	1	INTEGER	Switch to indicate year crossover
IDENTT	1	INTEGER	Identification number for arc
ISATNO	1	INTEGER	Satellite number
NUMGA	1	INTEGER	Number of gravity partials
ISYR	1	INTEGER	Start year of arc
IDAY	1	INTEGER	First day on trajectory tape
IDAYS	1	INTEGER	Number of days of ephemeris data
ILR	1	INTEGER	Switch indicating whether or not a time was accepted
LABEL	1	INTEGER	Parameter label for last arc parameter

MEPHM COMMON DEFINITION

MNEMONIC	# of WORDS	FORMAT	CONTENTS
PECDTR	(3x3x5)x2	DOUBLE	Polynomial coefficients for $(ECD)^T$ matrix
T	1x2	DOUBLE	Time associated with PECDTR

MNEMONIC DEFINITIONS

MNEMONIC	# of WORDS	FORMAT	CONTENTS
SRTIME	1x2	DOUBLE	Start time for run, in seconds
FNTIM	1x2	DOUBLE	Final time of run, in seconds
GMU	1x2	DOUBLE	Moon gravity
BEI	(6x6)x2	DOUBLE	Inverse of state portion of B matrix
TIME	1x2	DOUBLE	Current time
G	(3x16)x2	DOUBLE	Array of position, velocity and perturbations from TJECT
XOLD	3x2	DOUBLE	Unrotated satellite position
XDOTO	3x2	DOUBLE	Unrotated satellite velocity
XNEW	3x2	DOUBLE	Rotated satellite position
XDOTN	3x2	DOUBLE	Rotated satellite velocity
PRTBR	(6x6)x2	DOUBLE	Perturbations matrix
ECDT	(3x3)x2	DOUBLE	Rotation matrix, ECD^T
ORBEE	6x2	DOUBLE	Orbital elements
ORBPAR	18x2	DOUBLE	Partials of satellite position
ORBDOT	18x2	DOUBLE	Partials of satellite velocity
U	(6x6)x2	DOUBLE	Matrix of partials, U
R	(6x6)x2	DOUBLE	Rotated perturbation matrix
H	(6x6)x2	DOUBLE	Work area
TEM	(6x6)x2	DOUBLE	Work area
COV	(6x6)x2	DOUBLE	Covariance matrix

SECTION IV

SUBROUTINE WRITE-UPS

NAME	MAIN	
PURPOSE	Overall control program for the covariance matrix calculation. MAIN reads the input, sets up various arrays and switches, and calls the routines to generate the covariance matrix and other output.	
CALLS	ERROR	Error exit from COVAR
	FRMR	Multiplies a block diagonal matrix of ECD^T times a six by six matrix of perturbation partials.
	INVT	Inverts a matrix
	MULT	Multiplies two matrices
	OUTPUT	Prints the output matrix and vectors
	ROTV	Rotates the vectors X and $\dot{X}$ to selenographic frame of time
	STATE	Calculates orbital elements or initial conditions, and the matrix of partials, U^{-1}
	TIMCRD	Determines current time to be processed
	TJECT	Reads trajectory tape, interpolates for position and velocity vectors and perturbations matrix
	TRNSF	Evaluates ECD^T polynomial for ECD^T matrix
INPUT	TIME	Array of times at which the covariance matrix and position vectors are to be calculated
	BEI	Inverse of the state portion of a B matrix, produced by SOLVE

OUTPUT	For each input time, the corresponding covariance matrix in selenographic frame of time, and the orbital elements are printed		
TAPES	USED	18	Trajectory tape
		30	Scratch ephemeris tape
ERROR CHECKS	Error number five occurs if the start time is larger than the finish time, that is, if a run was requested with year crossover. Error number six occurs if more than ten of the requested times are not on the trajectory tape. Error number seven occurs if more than ten of the U^{-1} matrices formed could not be inverted		

NAME	EREAD (TIME, IENT)		
PURPOSE	Read ephemeris data that corresponds to time of observation.		
CALLED BY	MAIN		Overall control program for NORMEQ
INPUT	TIME		Time of observation
	IENT	=	True, initial entry to subroutine
	IENT	=	False, subsequent entries to subroutine.
OUTPUT	TZERO		Time of ephemeris data
	PXE		Interpolation polynomial coefficients for earth-moon vector, PXE (3, 9)
	PCDTR		Interpolation polynomial coefficients for rotation matrix $(CD)^T$, PCDTR (3, 3, 5)
	PBTR		Interpolation polynomial coefficients for ΔhPBTR(5)
NOTES	EREAD reads the ephemeris data from tape 30. All output goes into the INDATA common area.		

NAME	ERROR(N)	
PURPOSE	Error exit from COVAR	
CALLED BY	MAIN	Overall control program
	EREAD	Reads the ephermis tape
	TJECT	Control program for trajectory tape read and interpolation
	TREAD	Reads the trajectory tape
INPUT	N	Error number

OUTPUT This subroutine prints the following message and then halts the run

```
ERROR  NUMBER  N
```

NAME	FRMR (ECDT, PRTBR, R)	
PURPOSE	Multiply the block diagonal matrix containing ECD^T times the matrix of perturbations, PRTBR	
CALLED BY	MAIN	Overall control program
INPUT	ECDT	Rotation matrix ECD^T, order 3x3
	PRTBR	Matrix of perturbations, order 6x6
OUTPUT	R	Product matrix, order 6x6

NOTES The matrix R is actually formed by multiplying ECD^T times each quarter of the matrix PRTBR, to form the corresponding quarter of R

NAME	INTERP (F1, ICOMP, IINTER, DTIME, G1, S)	
PURPOSE	Form position, acceleration, velocity and third derivative of trajectories and perturbations.	
CALLED BY	MAIN, overall control program for NORMEQ	
INPUT	F1	Input table of trajectories and perturbations F1(8, 3, 77)
	ICOMP	Number of components
	IINTER	Number of functions
	DTIME	Interval of storage
	S	(T_{obs} - 4th time step)/ interval of storage
OUTPUT	G1	Output table of interpolated trajectories and perturbations G1(3,2,77)

NAME	INTPAR	
PURPOSE	Calculates partials of initial conditions with respect to orbital elements or initial conditions.	
CALLED BY	STATE	control program for conversions
INPUT	XER	initial position of satellite
	XDOTZ	initial velocity of satellite
	PZ	values from ORBTOX
	ERB	orbital elements
	GMU	moon gravity constant
	ORBUSE	logical flag; compute partials of initial conditions with respect to orbital elements if true; partials of initial conditions with respect to initial conditions otherwise.
OUTPUT	ORBPAZ	partials of satellite position with respect to orbital elements.
	ORBDOZ	partials of satellite velocity with respect to orbital elements.
NOTES	If ORBUSE is false a sample "unit" vertix is generated.	

NAME	INVT (A, ISW)	
PURPOSE	Invert matrix A, leaving the inverse matrix in area A	
METHOD	This is a Gauss-Jordan elimination procedure with a full pivot search	
CALLED BY	MAIN	Overall control program
INPUT	A	The six by six matrix to be inverted
OUTPUT	A	The inverse matrix
	ISW	A logical switch which is TRUE if the matrix inverted successfully, and FALSE if it did not.

NAME	MULT (AMAT, BMAT, CMAT)	
PURPOSE	This routine multiplies the matrices AMAT and BMAT to produce CMAT	
CALLED BY	MAIN	Overall control program
INPUT	AMAT	A matrix of order six
	BMAT	A matrix of order six
OUTPUT	CMAT	A matrix of order six

NAME	ORBTOX	
PURPOSE	Transforms orbital elements to initial conditions and computes values for use in INTPAR.	
CALLED BY	STATE	control program for conversions.
INPUT	ERB	orbital elements
	GMU	moon gravity constant
	ORBIN	true implies orbital element input; false, initial conditions.
OUTPUT	XFR	initial coordinates of satellite
	XDOTZ	initial velocities of satellite
	PZ	array of values for INTPAR
ERROR CHECKS	If iteration for PHI fails to converge, the message NON CONVERGENCE FOR PHI is printed and the run is stopped.	
NOTES	1. If initial conditions need not be calculated only the first sections of the program are executed, those necessary to provide the input data for INTPAR. 2. Several sets of equivalances are necessary because of previous definitions in the routine.	

NAME	OUTPUT (XNEW, XDOTN, COV, TIME, ORBEE)	
PURPOSE	Prints the output data for each time requested	
CALLED BY	MAIN	Overall control program
INPUT	XNEW	Position of satellite in selenographic frame of time
	XDOTN	Velocity of satellite in selenographic frame of time
	COV	Covariance matrix
	TIME	Current time
	ORBEE	Orbital elements
OUTPUT	All input items are printed	

NAME	ROTV (ECDT, XOLD, XDOTO, XNEW, XDOTN)	
PURPOSE	Rotates position and velocity of satellite to selenographic frame of time	
CALLED BY	MAIN	Overall control program
INPUT	ECDT	Rotation matrix, ECD^T
	XOLD	Position of satellite
	XDOTO	Velocity of satellite
OUTPUT	XNEW	Rotated position of satellite
	XDOTN	Rotated velocity of satellite

NAME	STATE	
PURPOSE	Control program for conversion of initial conditions to orbital elements and vice versa and for calculation of starting array of arc partials.	
CALLED BY	INPUT	Input program for integration
CALLS	ORBTOX	Computes initial conditions from orbital elements and prepares values for INTPAR
	XTOORB	Computes orbital elements from initial conditions.
	INTPAR	Calculates partials of initial conditions with respect to orbital elements or initial conditions.
INPUT	ORBIN	True implies orbital elements input; false, initial conditions.
	ORBUSE	True implies orbital elements output; false, initial conditions.

NAME	TIMCRD (IEN, SRTIM, FNTIM, TIME)	
PURPOSE	This subroutine reads the times from cards and returns them to the main routine one at a time, after checking to be sure they are within the time period for this run.	
CALLED BY	MAIN	Overall control routine
OPTIONS	IEN	A logical switch, TRUE for the first call to TIMCRD, and FALSE for the rest of the run
INPUT	SRTIM	Start time for this run
	FNTIM	Final time for this run
OUTPUT	TIME	Current time
NOTE	Any input time outside of the time period for this run is ignored	

NAME	TJECT (IEN, IS3, G, TIME, LAB)	
PURPOSE	Position ephemeris tape; read and interpolate trajectory and arcs at time of observation	
CALLED BY	MAIN	Overall control program
CALLS	TREAD	Read trajectory tape
	EREAD	Position ephemeris tape
	INTERP	Interpolate trajectory and arcs at time of observation
	ERROR	Input tapes have wrong record types
INPUT	IEN	=True, initial entry. False, otherwise (set to false by TJECT)
	IS3	=TRUE, observation time accepted. =FALSE, observation time not within range of trajectory arc
	TIME	TIME of observation
OUTPUT	G	Table of interpolated trajectory and arcs
	LAB	Label of one of the arcs on the trajectory tape.
ERROR CHECK	Error number 1 indicated an illegal record type on the trajectory tape.	

NAME	TREAD (TIME, TIMEA, DELTAA, ISPAN, IENT, S, F2, ILR, N).	
PURPOSE	Reads in appropriate trajectory and perturbation arrays.	
CALLED BY	MAIN - Overall control program for NORMEQ.	
INPUT	TIME	Time of observation.
	TIMEA	4th time step (on trajectory tape) from previous tape read; or, if initial positioning of tape, TIMEA will be equal to the initial time on the trajectory tape - 5* the time step interval (DELTAA).
	DELTAA	Time step interval.
	ISPAN	= 2, when run spans years. = 1, otherwise.
	IENT	= True, Initial entry to TREAD. = False, all subsequent entries.
	N	Total nr. of trajectory and perturbation functions.
OUTPUT	S	Variable for 8 point Legrangian.
	F2	Storage table F2 (I, J, K) I=1, 8, J=1, 3 K = 1, N.
	ILR	Set to 3-normal return. Set to 2-observation time occurs after final trajectory time. Set to 1-observation time occurs before initial trajectory time.
NOTES	TREAD uses tape 18.	

NAME	TRNSF (TIME, ROTATE)	
PURPOSE	Evaluate the ECD^T polynomial to produce the matrix ROTATE	
CALLED BY	MAIN	Overall control program
INPUT	TIME	Current time
	PECDTR	A (3x3x5) array of polynomial coefficients for the ECD^T matrix
	TMID	The time associated with PECDTR
OUTPUT	ROTATE	The rotation matrix ECD^T, of order three

NAME	XTOORB	
PURPOSE	Calculates orbital elements from initial conditions.	
CALLED BY	STATE	Control program for conversion.
INPUT	XER	Initial satellite coordinate.
	XDOTZ	Initial satellite velocity.
	GMU	Gravity constant of moon (GRAVMN)
OUTPUT	ERB	Computed orbital elements
ERROR CHECK	If AI is greater than ¶, the message AI GREATER THAN PI is printed, and the run continues.	

SECTION V

FLOW CHARTS

CMAIN

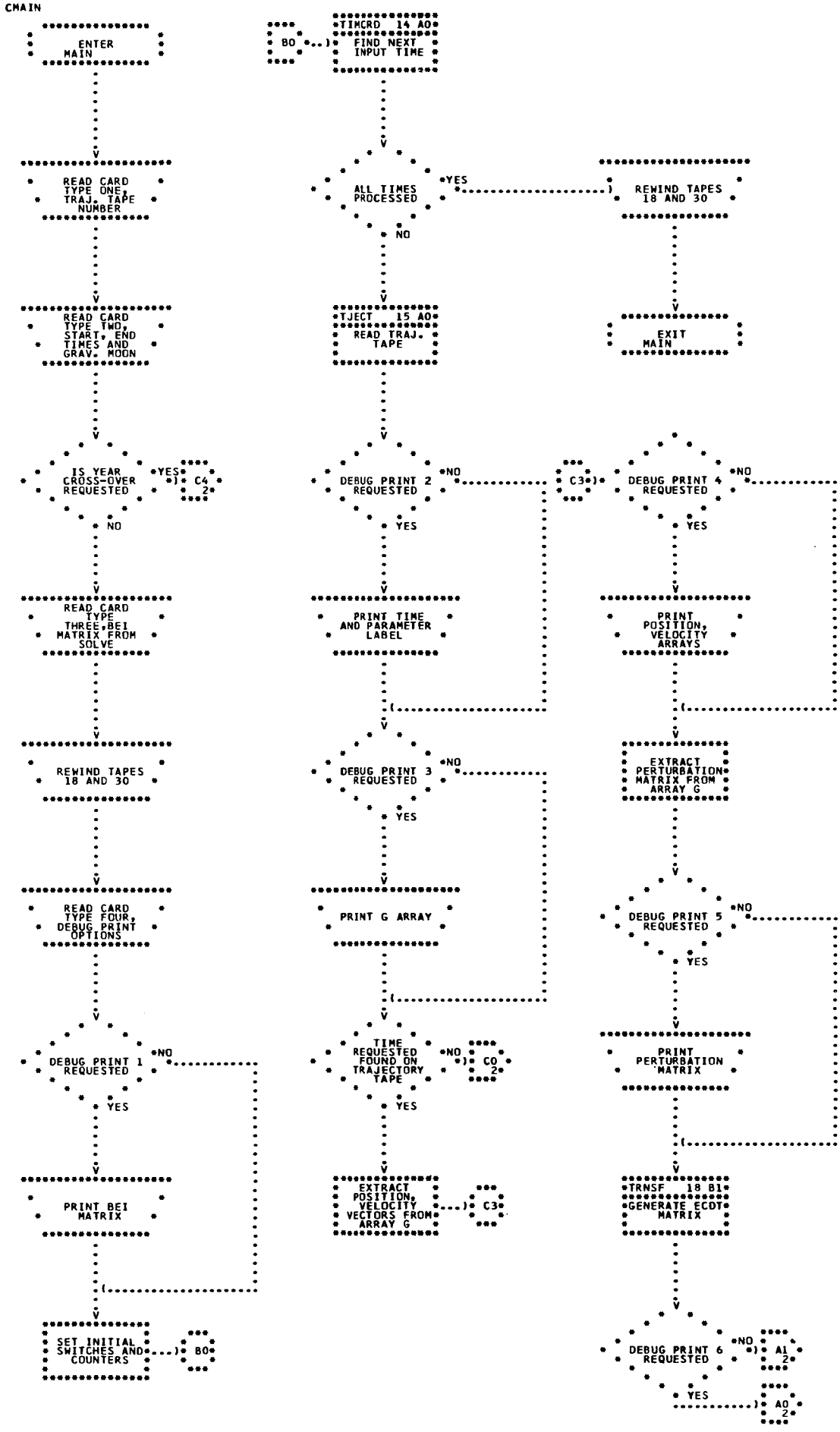
ENTER MAIN
READ CARD TYPE ONE, TRAJ. TAPE NUMBER
READ CARD TYPE TWO, START, END TIMES AND GRAV. MOON
IS YEAR CROSS-OVER REQUESTED
YES
C4 2
NO
READ CARD TYPE THREE,BEI MATRIX FROM SOLVE
REWIND TAPES 18 AND 30
READ CARD TYPE FOUR, DEBUG PRINT OPTIONS
DEBUG PRINT 1 REQUESTED
NO
YES
PRINT BEI MATRIX
SET INITIAL SWITCHES AND COUNTERS
B0
B0
TIMCRD 14 A0
FIND NEXT INPUT TIME
ALL TIMES PROCESSED
YES
NO
TJECT 15 A0
READ TRAJ. TAPE
DEBUG PRINT 2 REQUESTED
NO
YES
PRINT TIME AND PARAMETER LABEL
DEBUG PRINT 3 REQUESTED
NO
YES
PRINT G ARRAY
TIME REQUESTED FOUND ON TRAJECTORY TAPE
NO
C0 2
YES
EXTRACT POSITION, VELOCITY VECTORS FROM ARRAY G
C3
REWIND TAPES 18 AND 30
EXIT MAIN
C3
DEBUG PRINT 4 REQUESTED
NO
YES
PRINT POSITION, VELOCITY ARRAYS
EXTRACT PERTURBATION MATRIX FROM ARRAY G
DEBUG PRINT 5 REQUESTED
NO
YES
PRINT PERTURBATION MATRIX
TRNSF 18 B1 GENERATE ECDT MATRIX
DEBUG PRINT 6 REQUESTED
NO
A1 2
YES
A0 2

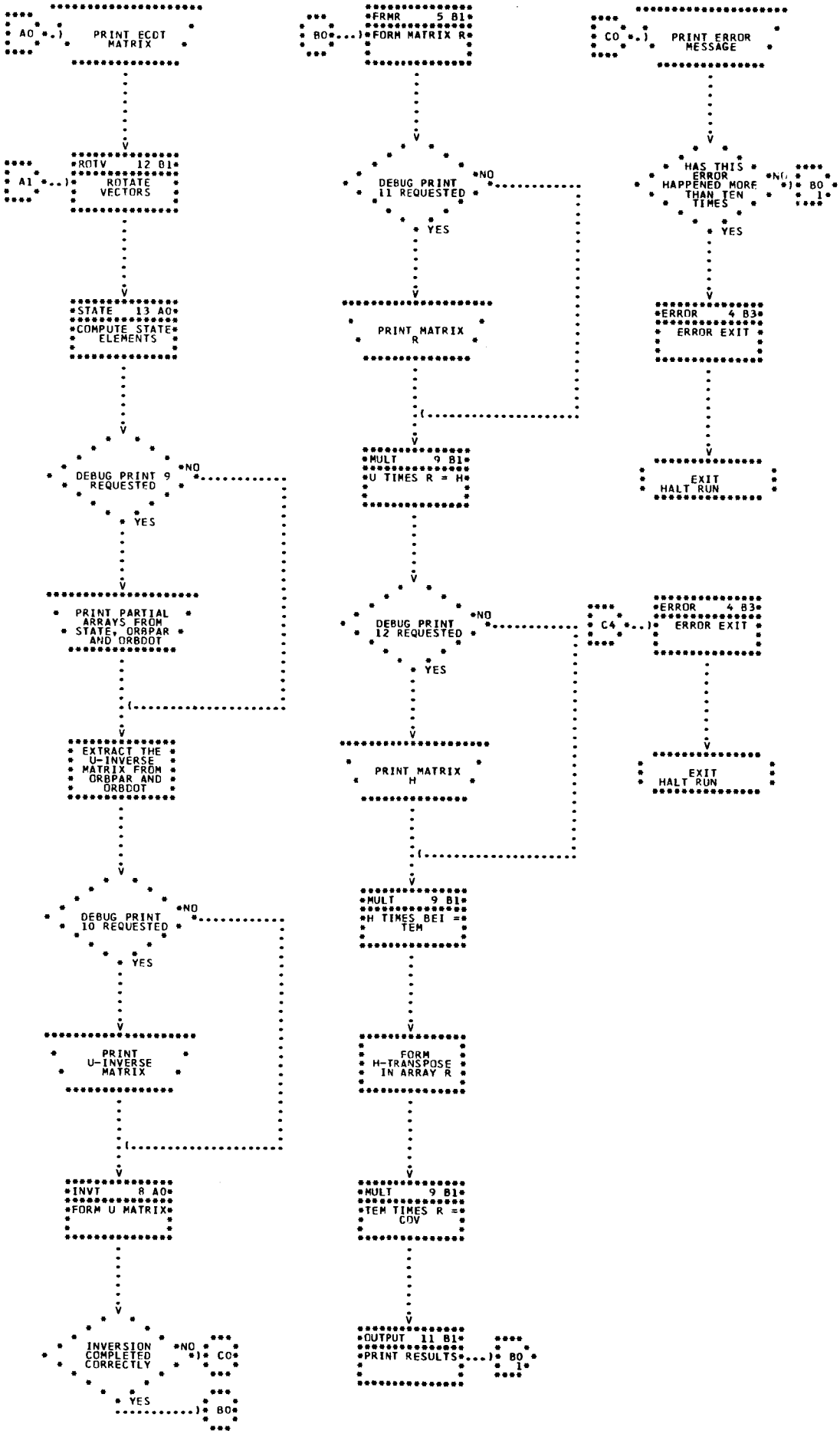
A0
PRINT ECDT MATRIX
A1
ROTV 12 01
ROTATE VECTORS
STATE 13 A0
COMPUTE STATE ELEMENTS
DEBUG PRINT 9 REQUESTED
NO
YES
PRINT PARTIAL ARRAYS FROM STATE, ORBPAR AND ORBDOT
EXTRACT THE U-INVERSE MATRIX FROM ORBPAR AND ORBDOT
DEBUG PRINT 10 REQUESTED
NO
YES
PRINT U-INVERSE MATRIX
INVT 8 A0
FORM U MATRIX
INVERSION COMPLETED CORRECTLY
NO
C0
YES
B0
B0
FRMR 5 B1
FORM MATRIX R
DEBUG PRINT 11 REQUESTED
NO
YES
PRINT MATRIX R
MULT 9 B1
U TIMES R = H
DEBUG PRINT 12 REQUESTED
NO
YES
PRINT MATRIX H
MULT 9 B1
H TIMES BEI = TEM
FORM H-TRANSPOSE IN ARRAY R
MULT 9 B1
TEM TIMES R = COV
OUTPUT 11 B1
PRINT RESULTS
B0
C0
PRINT ERROR MESSAGE
HAS THIS ERROR HAPPENED MORE THAN TEN TIMES
NO
B0
YES
ERROR 4 B3
ERROR EXIT
EXIT HALT RUN
C4
ERROR 4 B3
ERROR EXIT
EXIT HALT RUN

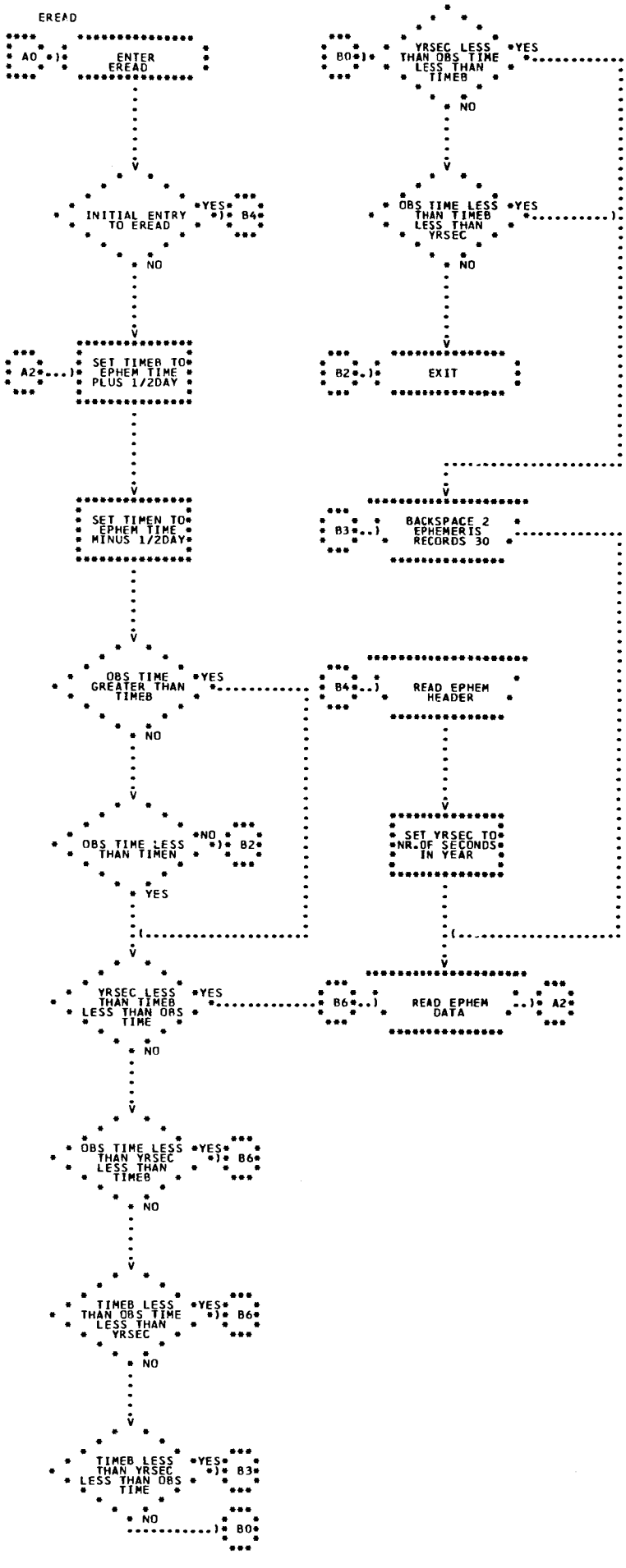
EREAD
A0
ENTER EREAD
INITIAL ENTRY TO EREAD
YES
B4
NO
A2
SET TIMEB TO EPHEM TIME PLUS 1/2DAY
SET TIMEN TO EPHEM TIME MINUS 1/2DAY
OBS TIME GREATER THAN TIMEB
YES
NO
OBS TIME LESS THAN TIMEN
NO
B2
YES
YRSEC LESS THAN TIMEB LESS THAN OBS TIME
YES
NO
OBS TIME LESS THAN YRSEC LESS THAN TIMEB
YES
B6
NO
TIMEB LESS THAN OBS TIME LESS THAN YRSEC
YES
B6
NO
TIMEB LESS THAN YRSEC LESS THAN OBS TIME
YES
B3
NO
B0
B0
YRSEC LESS THAN OBS TIME LESS THAN TIMEB
YES
NO
OBS TIME LESS THAN YRSEC LESS THAN TIMEB
YES
NO
B2
EXIT
B3
BACKSPACE 2 EPHEMERIS RECORDS 30
B4
READ EPHEM HEADER
SET YRSEC TO NR.OF SECONDS IN YEAR
B6
READ EPHEM DATA
A2

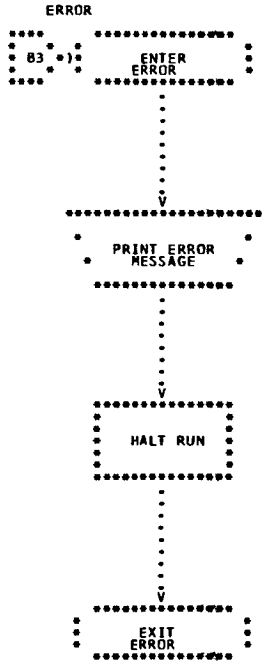
ERROR
B3
ENTER ERROR
PRINT ERROR MESSAGE
HALT RUN
EXIT ERROR

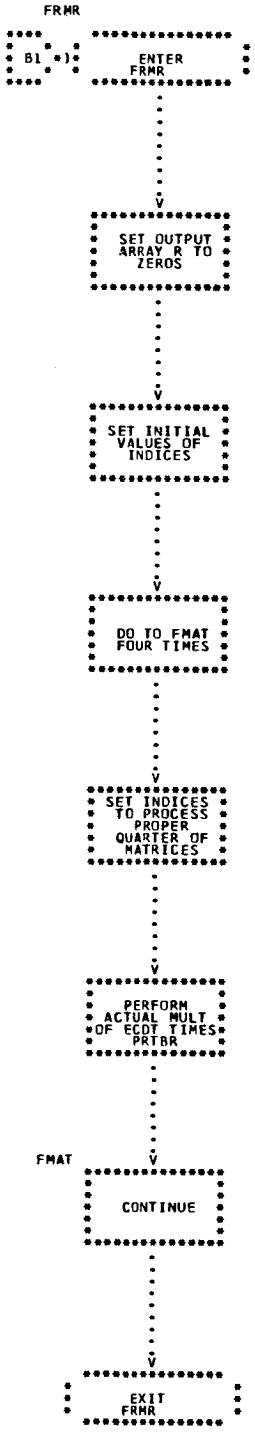
FRMR
B1
ENTER FRMR
SET OUTPUT ARRAY R TO ZEROS
SET INITIAL VALUES OF INDICES
DO TO FMAT FOUR TIMES
SET INDICES TO PROCESS PROPER QUARTER OF MATRICES
PERFORM ACTUAL MULT OF ECDT TIMES PRTBR
FMAT
CONTINUE
EXIT FRMR

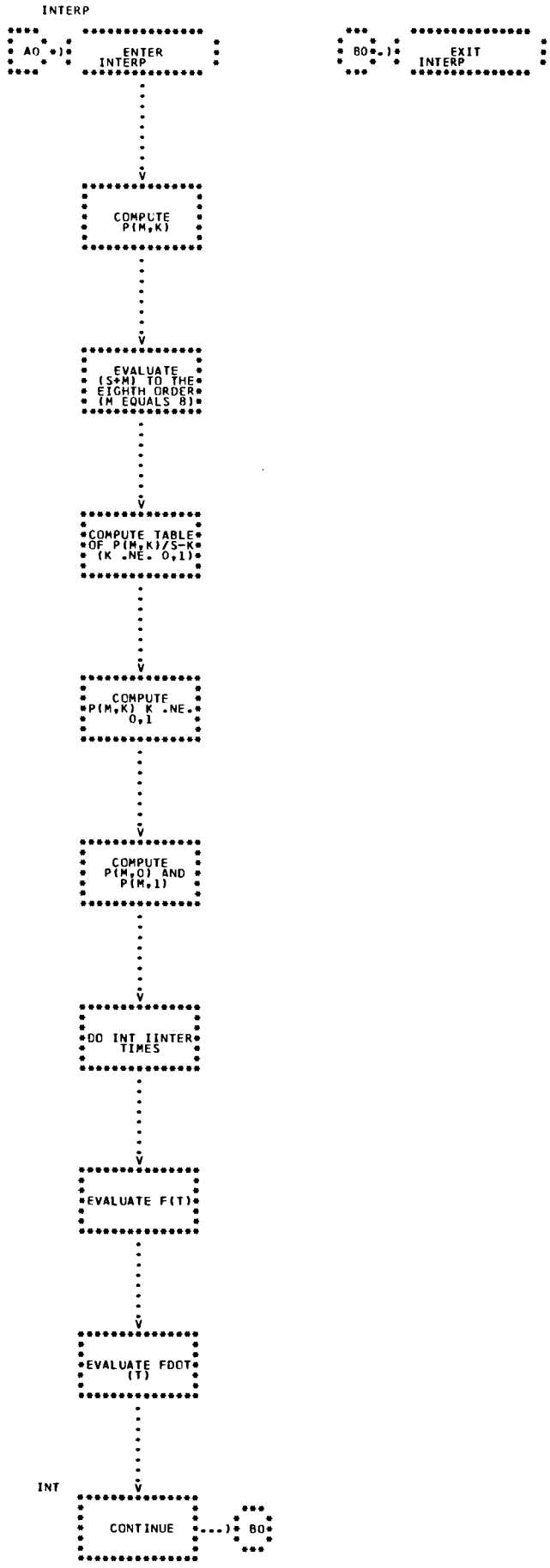
INTERP
A0
ENTER INTERP
COMPUTE P(M,K)
EVALUATE (S*M) TO THE EIGHTH ORDER (M EQUALS 8)
COMPUTE TABLE OF P(M,K)/S-K (K .NE. 0,1)
COMPUTE P(M,K) K .NE. 0,1
COMPUTE P(M,0) AND P(M,1)
DO INT IINTER TIMES
EVALUATE F(T)
EVALUATE FDOT (T)
INT
CONTINUE
B0
B0
EXIT INTERP

```
INTPAR

****      **************
*   *   *                *
* AO *)*      ENTER      *
*   *   *    INTPAR      *
****      **************
                 .
                 .
                 .
                 .
                 .
                 .
                 .
                 .
                 V
          **************
          *   COMPUTE  *
          *  CONSTANTS *
          * USING INPUT *
          *  ORB.ELEMS *
          *   AA,ETC.  *
          **************
                 .
                 .
                 .
                 .
                 .
                 .
                 .
                 V
          **************
          *            *
          * COMPUTE 1ST *
          * DERIVATIVES *
          *  OF INITIAL *
          *  CONDITIONS *
          **************
                 .
                 .
                 .
                 .
                 .
                 .
                 .
                 V
          **************
          *            *
          * COMPUTE 2ND *
          * DERIVATIVES *
          *  OF INITIAL *
          *  CONDITIONS *
          **************
                 .
                 .
                 .
                 .
                 .
                 .
                 .
                 V
          **************
        *                *
        *      EXIT      *
        *  INTPAR        *
          **************
```

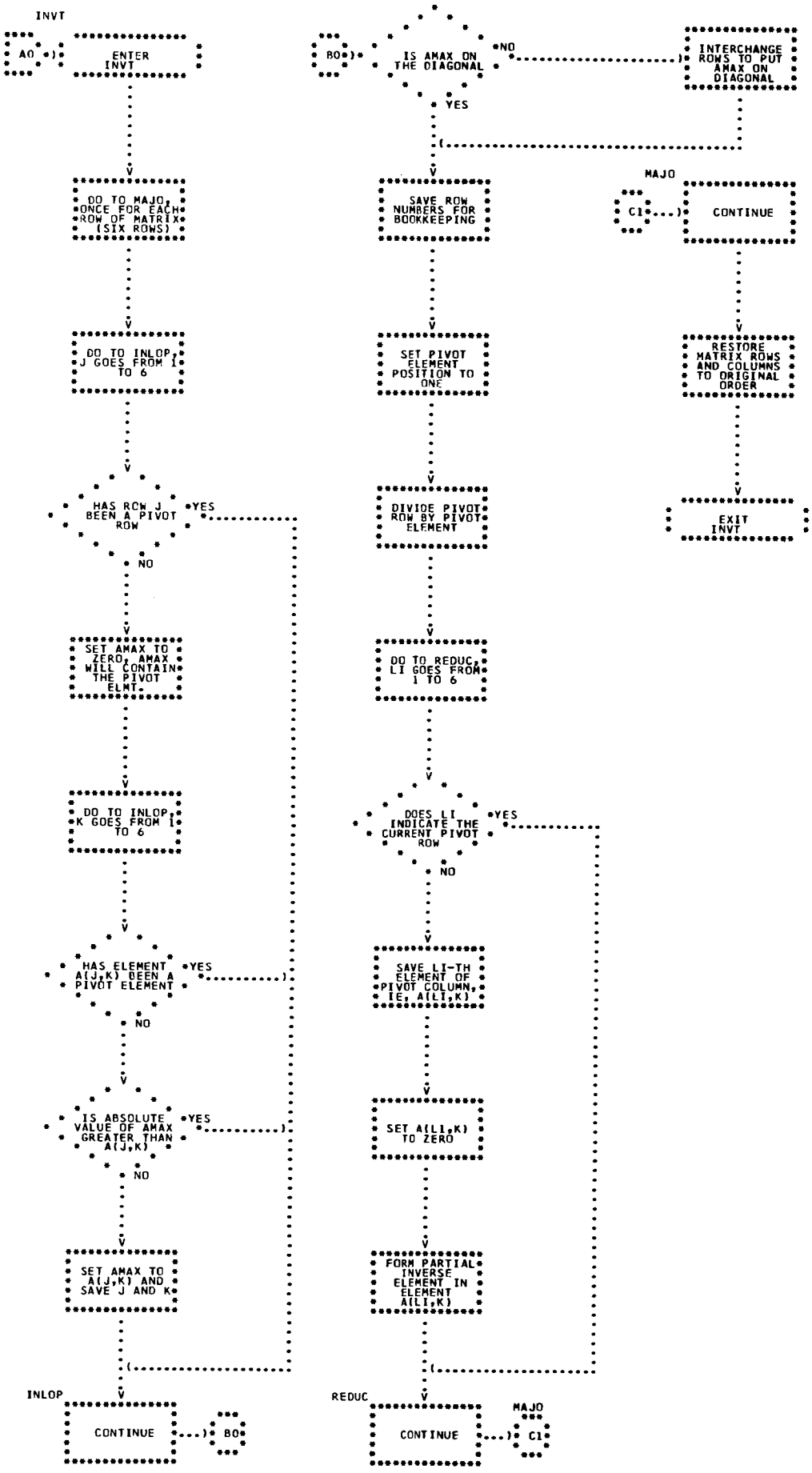
INVT
A0
ENTER INVT
DO TO MAJO, ONCE FOR EACH ROW OF MATRIX (SIX ROWS)
DO TO INLOP, J GOES FROM 1 TO 6
HAS ROW J BEEN A PIVOT ROW
YES
NO
SET AMAX TO ZERO, AMAX WILL CONTAIN THE PIVOT ELMT.
DO TO INLOP, K GOES FROM 1 TO 6
HAS ELEMENT A(J,K) BEEN A PIVOT ELEMENT
YES
NO
IS ABSOLUTE VALUE OF AMAX GREATER THAN A(J,K)
YES
NO
SET AMAX TO A(J,K) AND SAVE J AND K
INLOP
CONTINUE
B0
B0
IS AMAX ON THE DIAGONAL
NO
YES
INTERCHANGE ROWS TO PUT AMAX ON DIAGONAL
SAVE ROW NUMBERS FOR BOOKKEEPING
SET PIVOT ELEMENT POSITION TO ONE
DIVIDE PIVOT ROW BY PIVOT ELEMENT
DO TO REDUC, LI GOES FROM 1 TO 6
DOES LI INDICATE THE CURRENT PIVOT ROW
YES
NO
SAVE LI-TH ELEMENT OF PIVOT COLUMN, IE, A(LI,K)
SET A(LI,K) TO ZERO
FORM PARTIAL INVERSE ELEMENT IN ELEMENT A(LI,K)
REDUC
CONTINUE
MAJO
C1
MAJO
C1
CONTINUE
RESTORE MATRIX ROWS AND COLUMNS TO ORIGINAL ORDER
EXIT INVT

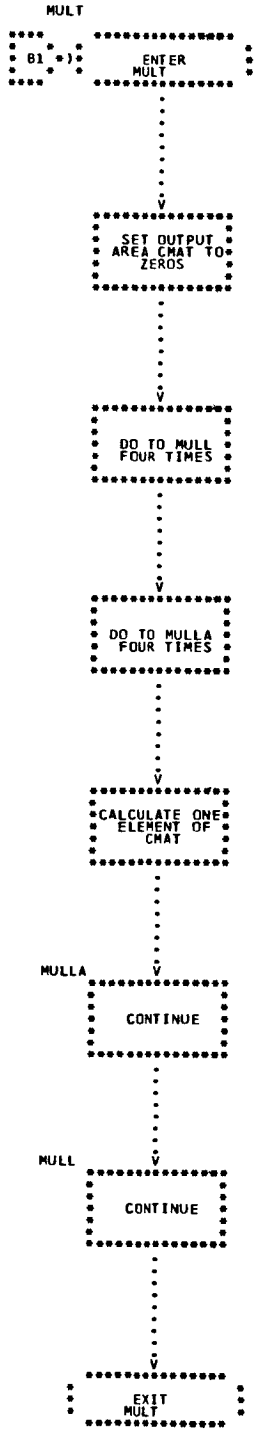
MULT
B1 *)
ENTER MULT
SET OUTPUT AREA CMAT TO ZEROS
DO TO MULL FOUR TIMES
DO TO MULLA FOUR TIMES
CALCULATE ONE ELEMENT OF CMAT
MULLA
CONTINUE
MULL
CONTINUE
EXIT MULT

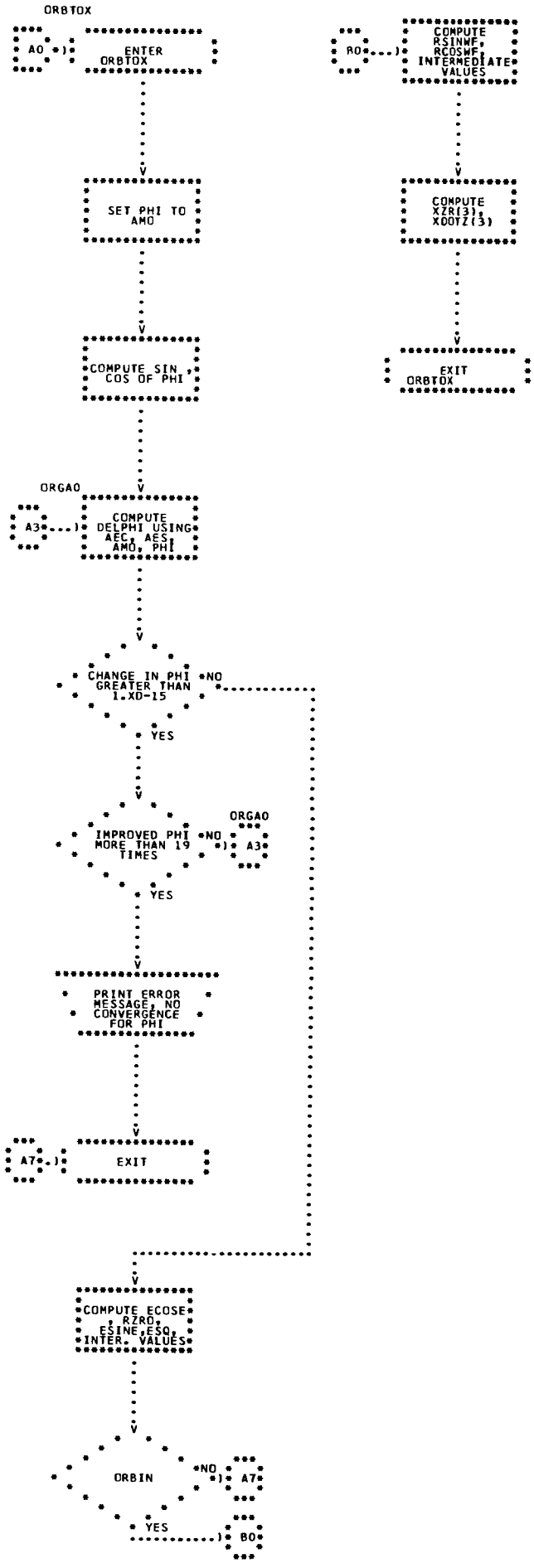
ORBTOX
A0
ENTER ORBTOX
SET PHI TO AMO
COMPUTE SIN , COS OF PHI
ORGA0
A3
COMPUTE DELPHI USING AEC, AES, AMO, PHI
CHANGE IN PHI GREATER THAN 1.XD-15
NO
YES
IMPROVED PHI MORE THAN 19 TIMES
NO
ORGA0
A3
YES
PRINT ERROR MESSAGE, NO CONVERGENCE FOR PHI
A7
EXIT
COMPUTE ECOSE , RZRO, ESINE,ESO, INTER. VALUES
ORBIN
NO
A7
YES
B0

B0
COMPUTE RSINWF, RCOSWF, INTERMEDIATE VALUES
COMPUTE XZR(3), XDOTZ(3)
EXIT ORBTOX

OUTPUT

```
****      ***************
*  *  *
* B1 *)*      ENTER       *
*  *  *      OUTPUT      *
****      ***************
                 .
                 .
                 .
```

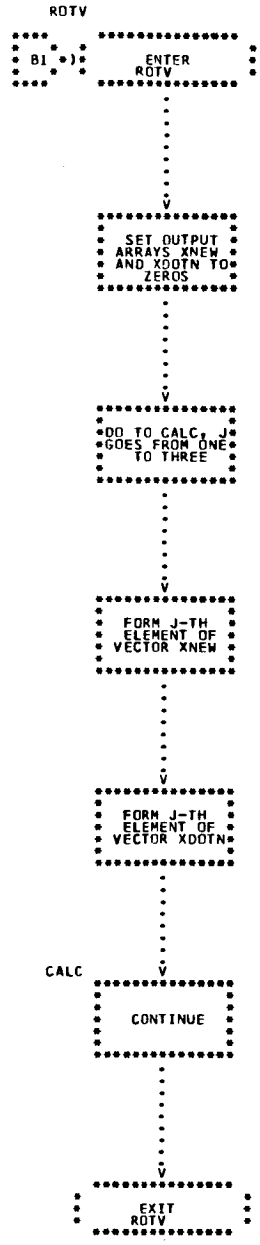
ROTV
B1 *)
ENTER ROTV
SET OUTPUT ARRAYS XNEW AND XDOTN TO ZEROS
DO TO CALC, J GOES FROM ONE TO THREE
FORM J-TH ELEMENT OF VECTOR XNEW
FORM J-TH ELEMENT OF VECTOR XDOTN
CALC
CONTINUE
EXIT ROTV

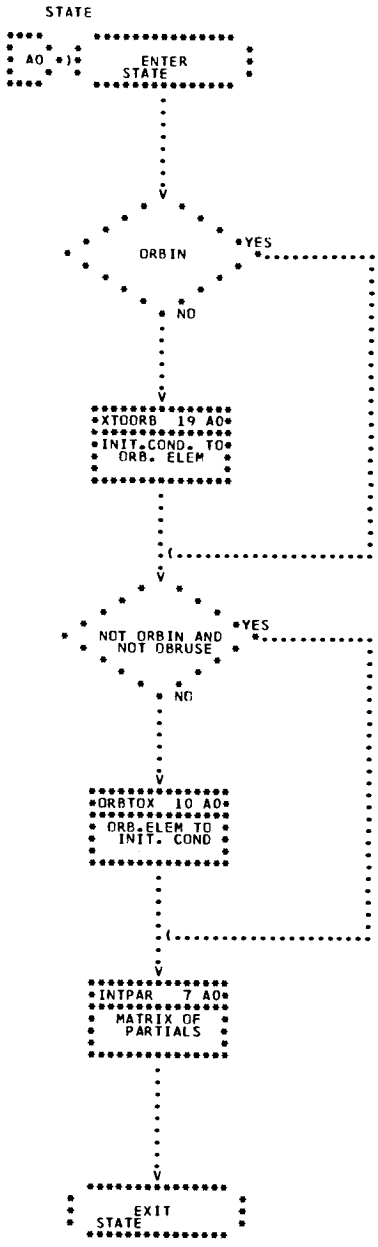
STATE
AO
ENTER STATE
ORBIN
YES
NO
XTOORB 19 AO
INIT.COND. TO ORB. ELEM
NOT ORBIN AND NOT OBRUSE
YES
NO
ORBTOX 10 AO
ORB.ELEM TO INIT. COND
INTPAR 7 AO
MATRIX OF PARTIALS
EXIT STATE

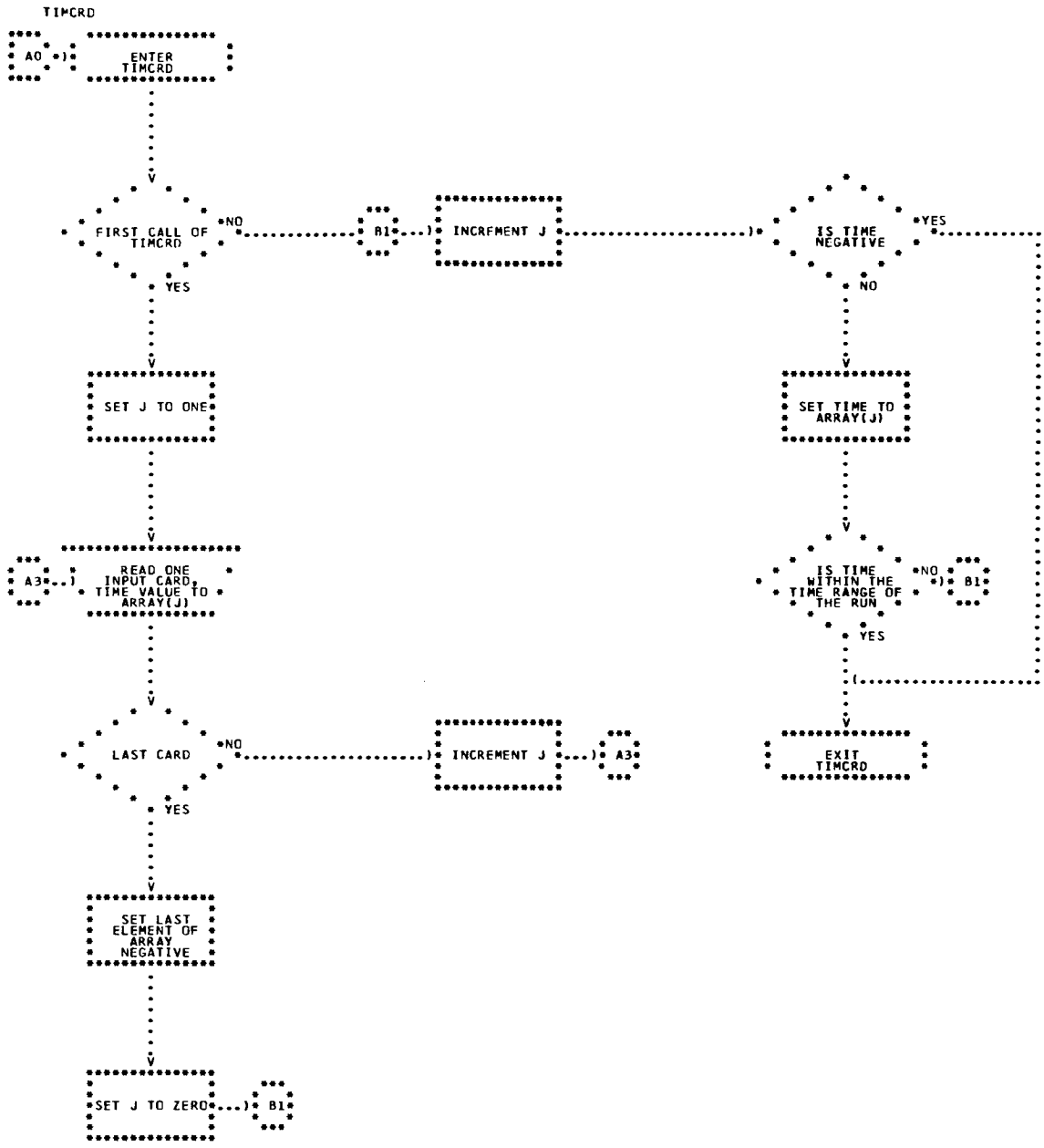
TIMCRD
A0
ENTER TIMCRD
FIRST CALL OF TIMCRD
NO
B1
INCREMENT J
YES
IS TIME NEGATIVE
YES
NO
SET J TO ONE
SET TIME TO ARRAY(J)
A3
READ ONE INPUT CARD, TIME VALUE TO ARRAY(J)
IS TIME WITHIN THE TIME RANGE OF THE RUN
NO
B1
YES
LAST CARD
NO
INCREMENT J
A3
EXIT TIMCRD
YES
SET LAST ELEMENT OF ARRAY NEGATIVE
SET J TO ZERO
B1

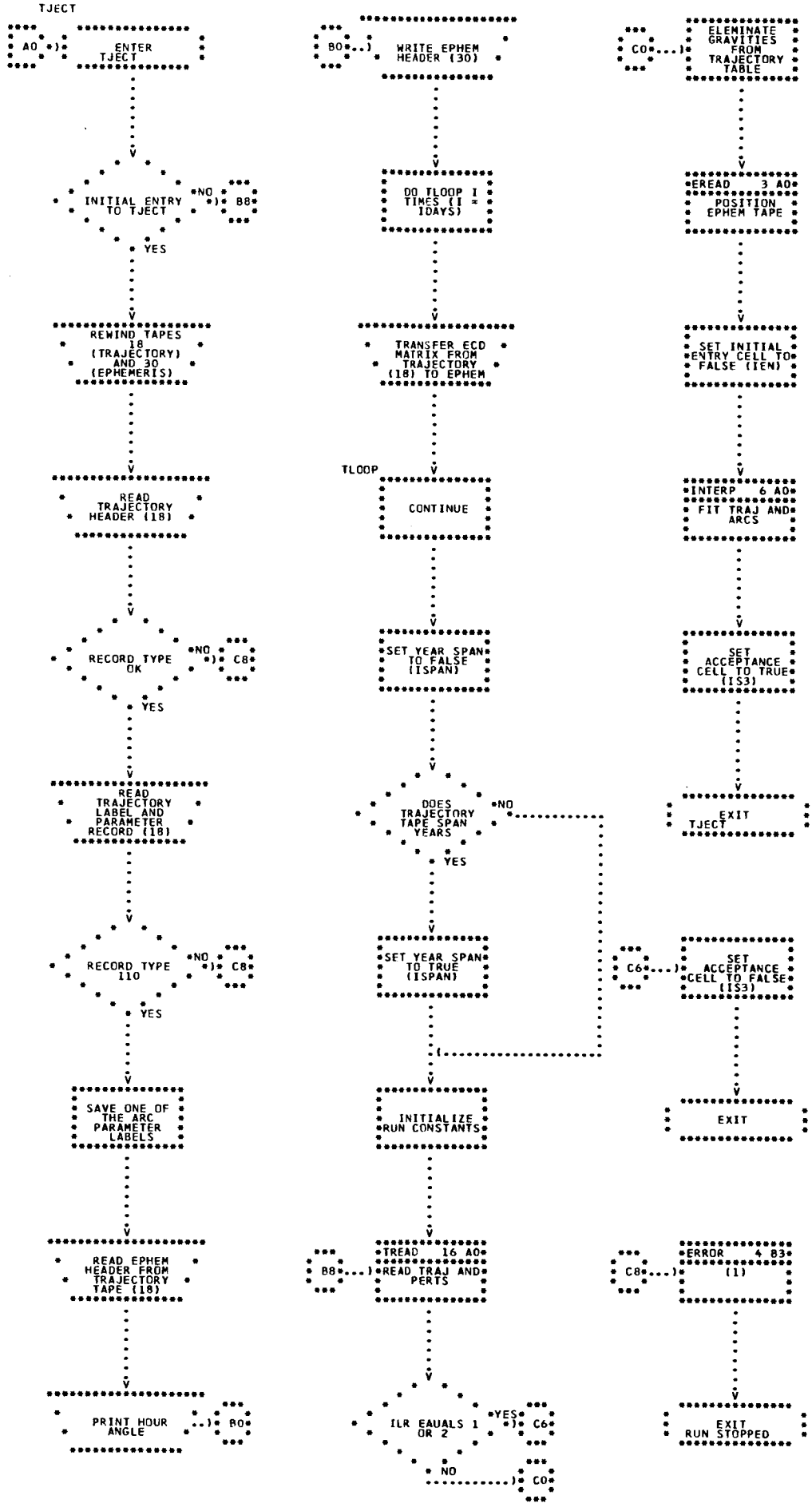
TJECT
A0
ENTER TJECT
INITIAL ENTRY TO TJECT
NO
B8
YES
REWIND TAPES 18 (TRAJECTORY) AND 30 (EPHEMERIS)
READ TRAJECTORY HEADER (18)
RECORD TYPE OK
NO
C8
YES
READ TRAJECTORY LABEL AND PARAMETER RECORD (18)
RECORD TYPE 110
NO
C8
YES
SAVE ONE OF THE ARC PARAMETER LABELS
READ EPHEM HEADER FROM TRAJECTORY TAPE (18)
PRINT HOUR ANGLE
B0
B0
WRITE EPHEM HEADER (30)
DO TLOOP I TIMES (I = IDAYS)
TRANSFER ECD MATRIX FROM TRAJECTORY (18) TO EPHEM
TLOOP
CONTINUE
SET YEAR SPAN TO FALSE (ISPAN)
DOES TRAJECTORY TAPE SPAN YEARS
NO
YES
SET YEAR SPAN TO TRUE (ISPAN)
INITIALIZE RUN CONSTANTS
B8
TREAD 16 A0
READ TRAJ AND PERTS
ILR EAUALS 1 OR 2
YES
NO
C6
C0
C0
ELEMINATE GRAVITIES FROM TRAJECTORY TABLE
EREAD 3 A0
POSITION EPHEM TAPE
SET INITIAL ENTRY CELL TO FALSE (IEN)
INTERP 6 A0
FIT TRAJ AND ARCS
SET ACCEPTANCE CELL TO TRUE (IS3)
EXIT TJECT
C6
SET ACCEPTANCE CELL TO FALSE (IS3)
EXIT
C8
ERROR 4 B3
(1)
EXIT RUN STOPPED

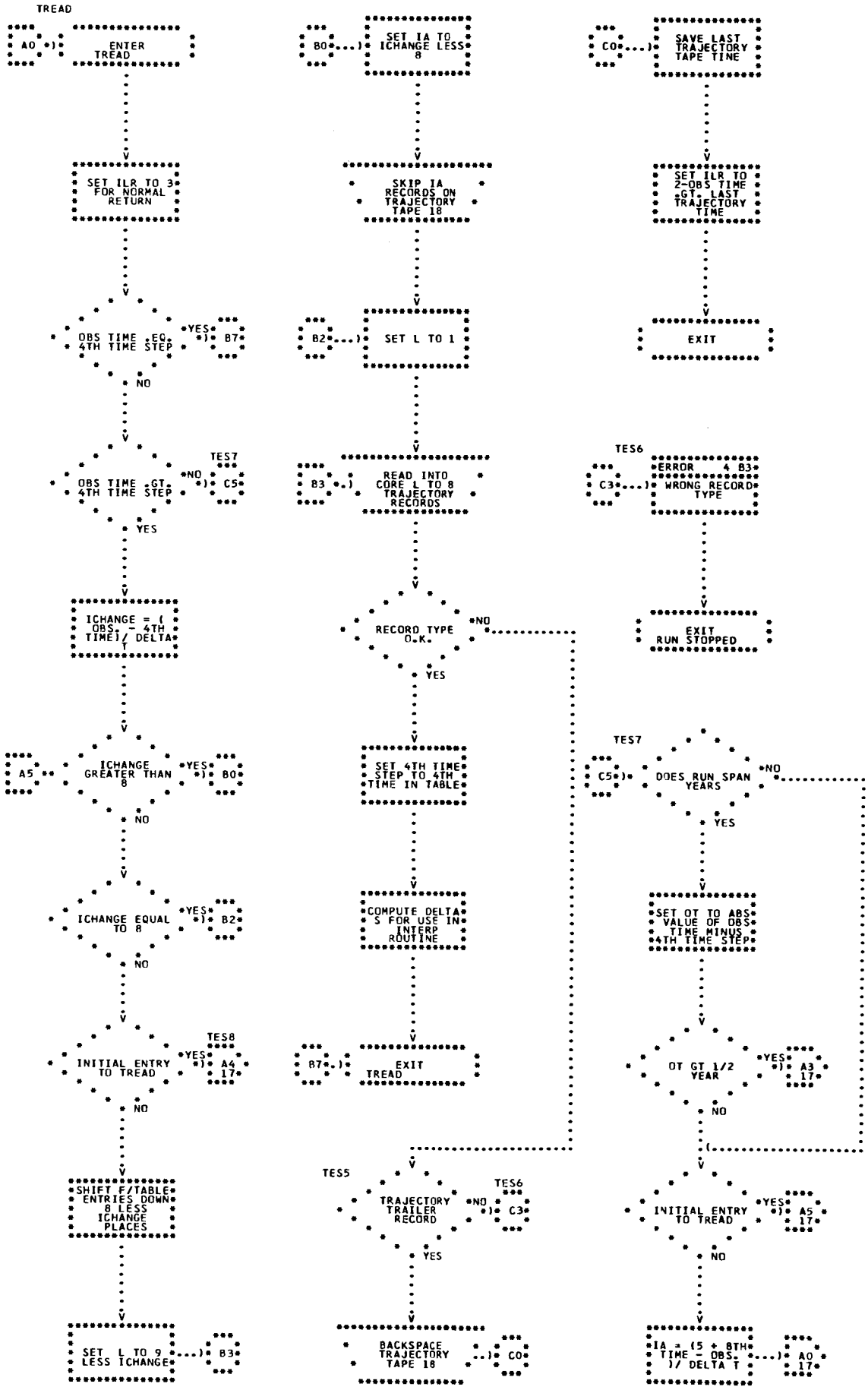
TREAD
A0
ENTER TREAD
SET ILR TO 3 FOR NORMAL RETURN
OBS TIME .EQ. 4TH TIME STEP
YES
B7
NO
OBS TIME .GT. 4TH TIME STEP
TES7
NO
C5
YES
ICHANGE = (OBS. - 4TH TIME)/ DELTA T
A5
ICHANGE GREATER THAN 8
YES
B0
NO
ICHANGE EQUAL TO 8
YES
B2
NO
INITIAL ENTRY TO TREAD
TES8
YES
A4
17
NO
SHIFT F/TABLE ENTRIES DOWN 8 LESS ICHANGE PLACES
SET L TO 9 LESS ICHANGE
B3
B0
SET IA TO ICHANGE LESS 8
SKIP IA RECORDS ON TRAJECTORY TAPE 18
B2
SET L TO 1
B3
READ INTO CORE L TO 8 TRAJECTORY RECORDS
RECORD TYPE O.K.
NO
YES
SET 4TH TIME STEP TO 4TH TIME IN TABLE
B7
COMPUTE DELTA S FOR USE IN INTERP ROUTINE
EXIT TREAD
TES5
TRAJECTORY TRAILER RECORD
NO
TES6
C3
YES
BACKSPACE TRAJECTORY TAPE 18
C0
C0
SAVE LAST TRAJECTORY TAPE TIME
SET ILR TO 2-OBS TIME .GT. LAST TRAJECTORY TIME
EXIT
TES6
C3
ERROR 4 B3
WRONG RECORD TYPE
EXIT RUN STOPPED
TES7
C5
DOES RUN SPAN YEARS
NO
YES
SET OT TO ABS VALUE OF OBS TIME MINUS 4TH TIME STEP
OT GT 1/2 YEAR
YES
A3
17
NO
INITIAL ENTRY TO TREAD
YES
A5
17
NO
IA = (5 + 8TH TIME - OBS.)/ DELTA T
A0
17

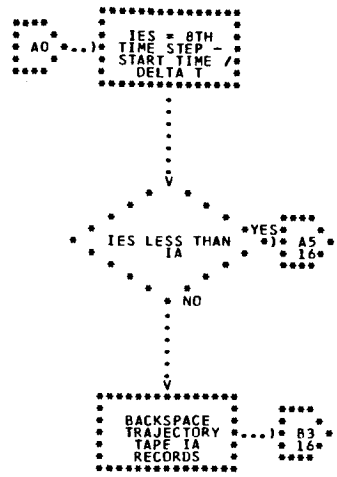
A0
IES = 8TH TIME STEP - START TIME / DELTA T
IES LESS THAN IA
YES
A5 16
NO
BACKSPACE TRAJECTORY TAPE IA RECORDS
B3 16

A3
SET ICHANGE TO OT.P. 1YEAR/ DELTA T
A5 16

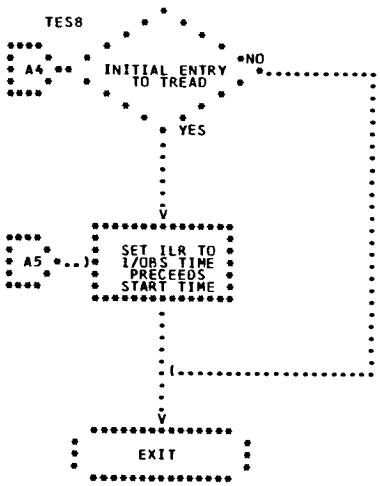
TES8
A4
INITIAL ENTRY TO TREAD
NO
YES
A5
SET ILR TO I/OBS TIME PRECEEDS START TIME
EXIT

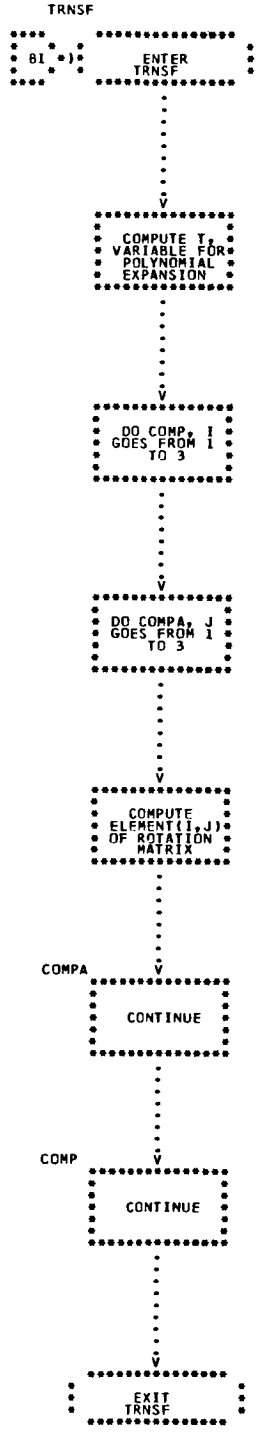
TRNSF
BI *)
ENTER TRNSF
COMPUTE T, VARIABLE FOR POLYNOMIAL EXPANSION
DO COMP, I GOES FROM 1 TO 3
DO COMPA, J GOES FROM 1 TO 3
COMPUTE ELEMENT(I,J) OF ROTATION MATRIX
COMPA
CONTINUE
COMP
CONTINUE
EXIT TRNSF

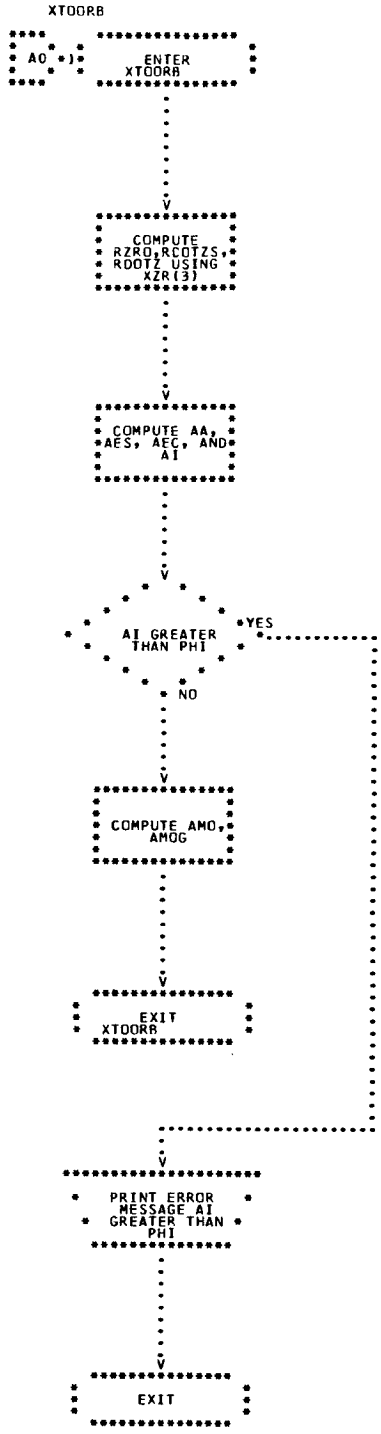
XTOORB
A0
ENTER XTOORB
COMPUTE RZRO,RCOTZS, RDOTZ USING XZR(3)
COMPUTE AA, AES, AEC, AND AI
AI GREATER THAN PHI
YES
NO
COMPUTE AMO, AMOG
EXIT XTOORB
PRINT ERROR MESSAGE AI GREATER THAN PHI
EXIT