N67-12097

COMPUTER PROGRAM FOR THE ANALYSIS OF FILAMENT-REINFORCED METAL-SHELL PRESSURE VESSELS

CONTRACT NAS 3-6292
"GLASS-FIBER-REINFORCED METALLIC TANKS FOR CRYOGENIC SERVICE"

Prepared by

Aerojet-General Corporation
Chemical & Structural Products Division
Computing Sciences Division
Von Karman Center
Azusa, California

May 1966

Prepared for

NASA, Lewis Research Center
Cleveland, Ohio

84

NOTICE

THIS DOCUMENT HAS BEEN REPRODUCED FROM THE BEST COPY FURNISHED US BY THE SPONSORING AGENCY. ALTHOUGH IT IS RECOGNIZED THAT CERTAIN PORTIONS ARE ILLEGIBLE, IT IS BEING RELEASED IN THE INTEREST OF MAKING AVAILABLE AS MUCH INFORMATION AS POSSIBLE.

FOREWORD

This manual documents a computer program developed for the design and analysis of filament-reinforced metal-shell pressure vessels. The computer program has been assigned Aerojet Job Number AGC 674.

This computer program operation manual was prepared by the Chemical and Structural Products Division and the Computing Sciences Division of the Aerojet-General Corporation, under Contract NAS 3-6292, entitled "Glass-Fiber-Reinforced Metallic Tanks for Cryogenic Service." The work on the contract is under the direction of the NASA, Lewis Research Center, Liquid Rocket Technology Branch. Mr. James R. Barber is the LRTB Project Manager.

The computer program and manual were prepared by F. J. Darms and R. E. Landes of the Chemical and Structural Products Division, and Dr. J. W. Lambert, M. C. Zethraeus, and R. McCowan of the Computing Sciences Division.

A magnetic tape reel of this computer program is available on loan from the Lewis Research Center, Technical Information Division, Library Branch.

Approved by:

F. J. Darms, Manager
Advanced Composites Section
Composite Structures Department

S. B. Fabeck, Manager
Composite Structures Department
Chemical & Structural Products Division

L. R. Rapp, Manager
Chemical & Structural Products Division

TABLE OF CONTENTS

I. INTRODUCTION

II. COMPUTER REQUIREMENTS

III. PROGRAM ROUTINE DESCRIPTION

A. MAIN PROGRAM

B. SUBROUTINE CKIN

C. SUBROUTINE RUNKUT

D. SUBROUTINE SERCYC

E. SUBROUTINE STRESS

F. SUBROUTINE STRAIN

G. SUBROUTINE RØØTS

H. SUBROUTINE EXITØ

J. SUBROUTINE TESTØ

IV. INPUT INFORMATION

A. REQUIRED INPUT CARDS

B. OPTIONAL INPUT

V. OUTPUT INFORMATION

VI. ADDITIONAL COMMENTS

A. ERROR MESSAGES

B. MESSAGES NOT CAUSING TERMINATION

C. LIMITING CASES

D. SAMPLE PROBLEMS

VII. NOMENCLATURE

APPENDICES

A. ANALYSIS

B. PROGRAM LISTING

C. SAMPLE PROBLEMS

I. INTRODUCTION

The purpose of the computer program is to perform calculations for the design and structural analysis of pressure vessels fabricated from filament-reinforced metal shells using equations presented in Appendix A. Design and analysis calculations include:

A. Solution of force equilibrium and strain compatibility equations at the equator of the heads.

B. Calculation of parameters describing head contours and the cylindrical section.

C. Determination of stresses and strains at all points on the head contour and in the cylindrical section resulting from various combinations of pressures and temperatures.

D. Computation of rating properties of the entire vessel and its components.

II. COMPUTER REQUIREMENTS

This program was written in FORTRAN IV for the IBM 7094-2 digital computer and has compiled and successfully run under both Version 12 and 13 of IBSYS as released by IBM. No special hardware features are used and no intermediate storage is required during processing. The program is written for an off-line load and an off-line print with the following tape specifications:

Input, Logical 5, Physical A-2

Output, Logical 6, Physical A-3

For simplification of input, one short subroutine (TESTØ) was written in MAP. This routine utilizes the fact that the FORTRAN read routines store a (-0) when reading a blank input field and a (+0) when reading an input value of 0.0. All past and present versions of 7094 IBSYS have performed in this manner and it is not likely that IBSYS changes in the future will require modification to subroutine

TESTØ. A card listing of the FORTRAN IV source deck for the computer program is given in Appendix B.

III. PROGRAM ROUTINE DESCRIPTION

Program No. 674 consists of the main program, plus the following subroutines:

Subroutine Name	Deck Name
CKIN	CKN
RUNKUT	RNKT
SERCYC	AAAP
STRESS	LPF
STRAIN	STRA
RØØTS	RØØT
EXITØ	ENC
TESTØ	TSTØ

A. MAIN PROGRAM

The primary functions of the main program are:

1. Direct the calling of subroutines. A detailed flow diagram is shown in Figure 1, and a general calling sequence diagram is shown below.

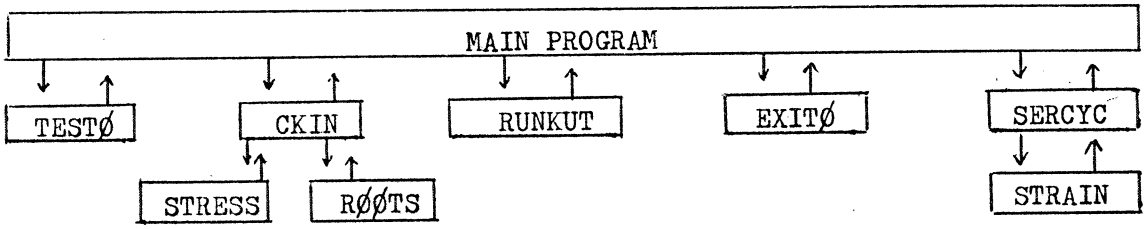

2. Provide the logic necessary for two options:

a. Winding Pattern - Geodesic Isotensoid (ISO=2) or In-Plane-Wrap (ISO=1).

b. Cylinder Length - Cylindrical section required (CYLN≠1) or oblate spheroid with no cylindrical section required (CYLN=1).

3. Calculate the physical properties and performance of the vessel and its components as described in Section IIE of Appendix A.

4. Calculate the last point on the head contour (ISO, CPREV) as described in Section IIB of Appendix A.

5. Calculate the thickness of hoop filaments and the initial winding stress in the filaments as described in Section IIC of Appendix A.

B. SUBROUTINE CKIN

This routine is called by the main program to calculate those variables at the equator of the head which were not input. Section IIA1 of Appendix A. lists the equations which must be satisfied, and Section IIA2 of Appendix A describes the methods of solution. A detailed flow diagram of this routine is shown in Figure 2. The type of mandrel and flow path is dependent on whether SØLH is input or not. If SØLH is input, the routine assumes a rigid mandrel for stabilization of the liner if not a pressure stabilized mandrel is assumed.

C. SUBROUTINE RUNKUT

This routine is called by the main program to integrate the differentia equation defining the head contours of the vessel. Integration is accomplished by Runge-Kutta-Gill techniques applied to equation 27, Section IIB of Appendix A. The main program sets up the initial conditions and starting integration interval and then calls RUNKUT for each point on the head contour. RUNKUT adjusts the integration interval to maintain numerical stability, thereby varying the number of points on the head. A counter in the main program is incremented by one at each CALL to RUNKUT to limit the number of points per head to a dimensioned size of 200. In that the heads are symetrical about the vessel's longitudinal axis, the points are contained between the equator (point of juncture of head and cylinder) and the head boss.

D. SUBROUTINE SERCYC

In size and complexity, this routine is second only to the main program. A detailed flow chart is presented in Figure 3 which shows the logic for

performing calculations based on equations contained in Section IID of Appendix A.

Early in the development of the computer program, it was decided that the program was to have the capability of designing a filament-wound vessel and then have the added capability of subjecting the designed vessel to a series of pressure and temperature changes. In that the logic in designing and in subjecting the vessel to pressure and/or temperature changes was similar and the equations identical, SERCYC was written with a dual capability. Where the logic requires different paths of calculation, the path selected is based upon the status of the variable IMAIN. When IMAIN=1, SERCYC is used for vessel design; for IMAIN=2, SERCYC is used for a pressure-temperature parameter study.

IMAIN=1 (Design): The use of SERCYC for design purposes is straightforward. SERCYC is called to evaluate three stresses and three strains during winding for three different conditions (NCOND 1, 2, and 3).

At NCOND=1, the stresses and strains are evaluated at zero vessel pressure and with liner and filament at room temperature.

At NCOND=2, the stresses and strains are evaluated at zero vessel pressure and with liner and filament at design temperature.

At NCOND=3, the stresses and strains are evaluated at design vessel pressure and design liner and filament temperature.

The eighteen stresses and strains calculated for NCOND 1, 2, and 3 are printed out for each head point on each head contour and exist as variables SØLP through EFD on output listings. The routine is slightly complicated by the necessity (due to storage limitations) of evaluating only six points on the head at a time. In that SERCYC is set up to range through a DO loop from 1 to the number of contour points, SERCYC is called with the range of the DO loop as part of its argument list.

IMAIN=2 (Service Cycle): This phase of the routine is complicated

by the requirement of repeated pressure-temperature cycles. The purpose of this capability is to take a designed vessel and subject it to a series of pressure-temperature changes to obtain stresses and strains and associated distortions and then return to the original design conditions and subject the vessel to another different series of pressure-temperature changes. To accomplish this repeatability, design data must be retained for each point on each head, plus design data for the cylinder part of the vessel. Also, vessel conditions found for a pressure-temperature change must be retained as starting conditions for the following pressure temperature change and so on. Pressure-temperature variations are controlled by card input and are described under Input Information, Section IV.

E. SUBROUTINE STRESS

This routine is called by subroutine CKIN to calculate stresses in the metal shell from strain input data (EBLH/EBL). Calculations of stress depend on whether the input strain is greater than or less than the strain at the yield point of the metal shell.

F. SUBROUTINE STRAIN

The strain routine is called by routine SERCYC to evaluate metal shell biaxial strains, change in yield stress and accumulative plastic set for all conditions of temperature and pressure. The equations used by the strain routine are contained in Section IID of Appendix A and the flow diagram is shown in Figure 4.

G. SUBROUTINE RØØTS

This routine evaluates a quadratic equation of the form $ax^2 + bx + c = 0$ by the method of

$$r = \frac{-b \pm \sqrt{b^2 - 4ac}}{2a}$$

where only the smallest, positive root is desired.

H. SUBROUTINE EXITØ

This routine is called when it is desirable to terminate processing a design case. At such time, IRCASE is tested to see if service-cycle data cards exist for that case (no input at IRCASE). If data cards exist, they must be passed until a new design case is reached (first card after ISCN = 1). If no service-cycle

data is included (IRCASE = 1), no skipping of input cards is necessary.

J. SUBROUTINE TESTØ

This is the only MAP routine in the program. Its entire purpose is to test an input variable to determine whether that variable was left blank or input as zero. The validity of this routine is based upon IBSYS storing minus zeros for blank input fields.

USAGE	CALL TESTØ (VAR, K)	Real variable
	CALL TESTØ (NVAR, K)	Integer variable

K is returned as

0 - when VAR is zero or non-zero
1 - when VAR is blank (-0)

IV. INPUT INFORMATION

A. REQUIRED INPUT CARDS

The following sequence of punched cards numerically defines the case to be analyzed. Typical input sheets are shown in Appendix C.

1. Title Cards

Columns 1 to 72 may contain any title information and will head the output.

2. Geometry Card

This card contains the required geometry input data. (*) denotes optional input.

Columns 1 - 12	Total Vessel Length - VLEN
13 - 24	Vessel Radius - A
25 - 36	Boss Radius, Head #1 - XO1
37 - 48	Boss Radius, Head #2 - XO2
49 - 60	Distance Estimate - C

Both XO1 and XO2 must be greater than zero. Columns 49-60 contain an estimate of the C value (see nomenclature) to be used for in-plane-srap patterns (ISO=1). If no C value is given, the program assumes that a geodesic-isotensoid (ISO=2) is required.

3. Metal Shell Properties, Card 1

Two cards are required to define the properties of the metal shell and their change with respect to temperature.

Columns 1 - 12	Density - RHOL
13 - 24	Coefficient of Thermal Expansion - ALPL
25 - 36	Tensile Yield Strength - SYL
37 - 48	Derivative of SYL with respect to temperature - DSYLDT
49 - 60	Compressive yield strength or buckling limit - SYLC
61 - 72	Derivative of SYLC with respect to temperature - DSYCDT

4. Metal Shell Properties, Card 2

Columns 1 - 12	Elastic Modulus - EL
13 - 24	Derivative of Elastic Modulus respect to temperature - DELDT
25 - 36	Plastic Modulus - E1
37 - 48	Derivative of Plastic Modulus with respect to temperature - DE1DT
49 - 60	Poisson's Ratio - VL
61 - 72	Derivative of Poisson's Ratio with respect to temperature - DNULDT

5. Filament Composite Properties Card

Columns 1 - 12	Composite Density - RHOG
13 - 24	Composite Coefficient of Thermal Expansion ALFF
25 - 36	Filament Elastic Modulus - EF
37 - 48	Derivative of Elastic Modulus with respect to temperature - DEFDT
49 - 60	Volume Fraction Filament - BIK

6. Design Conditions, Card 1

A series of three cards is used to describe the optional and

fixed design conditions. (*) denotes option input.

Columns 1 - 12	(*) Design Pressure - PD
13 - 24	Filament Stress at the Winding Condition - SØF
25 - 36	Metal Shell Meridional Stress at the Winding Condition - SØL
37 - 48	Room Temperature - TR
49 - 60	Design Temperature of Composite - TDF
61 - 72	Design Temperature of Metal Shell - TDL

7. Design Conditions, Card 2

Columns 1 - 12	(*) Composite Thickness at the Equator - TO
13 - 24	(*) Filament Design Stress - SFD
25 - 36	(*) Metal Shell Uniaxial Hoop Strain at Design - EBLH
37 - 48	(*) Metal Shell Thickness at the Equator -
49 - 60	(*) Metal Shell Hoop Stress at the Winding Condition - SØLH
61 - 72	(*) Cylinder Parameter - CYLN
80	(*) Service Cycle Flag - IRCASE

8. Design Conditions, Card 3

Columns 1 - 12	(*) Metal Shell Uniaxial Meridional Strain at Design - EBL

B. OPTIONAL INPUT

All input parameters marked with a star (*) may be optional or required depending on the desired use of the program. The following options are available and controlled by choice of starred input.

1. Winding Pattern

Two wrap patterns have been programmed and the choice will dictate the head contour.

a. Geodesic Isotensoid

If the value of C, columns 49 - 60 of card 2, is left

blank the program assumes a Geodesic-Isotensoid wrap pattern. For this case, the boss radii XO1 and XO2 must be made equal.

b. In-Plane-Wrap

If a number greater than zero is input in columns 49-60 of card 2, the program assumes an In-Plane-Wrap pattern. If XO1 and XO2 are not identical, care must be used in the interpretation of output data (see Section VI).

2. Type of Mandrel

Five separate loops which depend on the choice of mandrel are available.

a. Pressure Mandrel

If SØLH, columns 49-60 of card 7, is left blank the program assumes a pressure stabilized mandrel is desired. The following table shows input options available for this type of mandrel: (see cards 7 and 8 for location).

INPUT VARIABLES (X DENOTES FIXATION)

SFD	EBLH	EBL	TL	TO	PD
X	X		X - two of three		
	X	X	X - two of three		
X			X		X

b. Rigid Mandrel

If a value for SØLH is input, the program assumes a rigid mandrel is required. Options available for this type of mandrel are shown below:

INPUT VARIABLE (X DENOTES FIXATION)

SFD	EBLH	EBL	TL	TO	PD
X			X - two of three		
	X		X - two of three		

3. Cylinder Requirement

If CYLN, columns 61-72 of card 7, is left blank, the program assumes a cylindrical section is required in the vessel design. If CYLN is given a value of 1, the program assumes an oblate spheroid (back-to-back heads) is required and adjusts VLEN to allow for the absence of a cylindrical section.

4. Service Cycle

One card is required for each combination of pressure/temperature. There may be N combinations of pressure and temperature in each service cycle and M independent service cycles applied to each design.

Columns 1-12	New Design Pressure - PN
13-24	New Metal Shell Temperature - TNL
25-36	New Filament Composite Temperature - TNF
79-80	Control Flag - ISCN

ISCN must equal 1 for first card in any service cycle and -1 for the last card in the same service cycle.

V. OUTPUT INFORMATION

Refer to Nomenclature (Section VIII) for FORTRAN symbols used in presentation of input.

A. INPUT DATA

B. DESIGN DATA AT THE EQUATOR

1. Properties of Materials at Design Temperature

2. Thickness

a. Metal Shell

b. Composite

c. Equivalent Filament

3. Pressure

a. Design

b. Wrap

4. Stresses

a. Wrap Condition

b. Zero Pressure/Room Temperature

c. Zero Pressure/Design Temperature

d. Design Pressure and Temperature

C. HEAD CONTOUR DATA

Program writes the type of head contour being used and for each point on the contour:

1. Coordinates
2. Wrap Angle
3. Radii of Curvature
4. Composite Thickness
5. Stresses and Strains (for each condition stated in B-4)

D. HEAD PROPERTIES (FOR EACH HEAD)

1. Arc Length
2. Surface Area
3. Contained Volume
4. Weight of Metal Shell
5. Weight of Filament Shell
6. Weight of Head

E. CYLINDER PROPERTIES

1. Arc Length
2. Surface
3. Contained Volume
4. Weight of Metal Shell
5. Weight of Filament Shell
6. Hoop Wrap Equivalent Filament Shell Thickness
7. Cylinder Length

F. CYLINDER STRESSES AND STRAINS (FOR EACH CONDITION STATED IN B-4)

G. VESSEL PROPERTIES

1. Total Arc Length

2. Total Surface Area

3. Total Contained Volume

4. Total Weight

5. Performance Factor pV/W

Additional information is obtained from the output in the form of messages describing various conditions or changes in parameters which are required to optimize a given design.

H. SERVICE CYCLE

Data is printed for each point on the head contour and for the cylinder at each pressure/temperature combination.

1. Stresses

2. Strains

3. Change in Yield Stress Due to Plastic Set

VI. <u>ADDITIONAL COMMENTS</u>

A. ERROR MESSAGES

The following error messages, when printed, cause termination of data cases. They are listed by the routine issuing the message with the probable cause defined.

1. <u>Main Program</u>

a. "CANNOT RUN PROBLEM". . . An isotensoid case has been read in with XØ1 ≠ XØ2. Change input such that XØ1 = XØ2.

b. "NUMBER OF PTS ON HEAD EXCEEDS DIMENSIONED SIZE OF 200". Subroutine RUNKUT has not been able to complete integration within 200 steps. Re-Check input data.

c. "UNABLE TO ITERATE ON C. CLAST = , C= ,". . . A value of C could not be found after 10 iterations. Re-check input data.

d. "UNABLE TO CALCULATE LAST POINT INPLANE-WRAP ON A SPHERE. . . CHECK INPUT". . . The program is attempting to take the square root of a negative number. Re-check input data.

e. "UNABLE TO CALCULATE LAST POINT INPLANE-WRAP NOT ON A SPHERE. . . CHECK INPUT". . . See explanation under d.

2. Subroutine CKIN

a. "TL OR PD MUST BE INPUT". . . Insufficient input data to complete loop.

b. "TO OR TL MUST BE INPUT". . . Same as above.

c. "SFD NOT GIVEN". . . SFD must be input for this combination of input data.

d. "SFD OR EBL MUST BE INPUT". . . Re-check input data.

e. "RADIC IS NEGATIVE". . . The program is attempting to take the square root of a negative number. Re-check input.

f. "TO OR PD MUST BE INPUT". . . Re-check input data.

g. "SFD MUST BE INPUT". . . Input SFD if this loop is desired.

h. "BOTH PD AND TL MUST BE INPUT". . . Check input data.

3. Subroutine ROOTS

"NO REAL POSITIVE ROOT EXISTS. RADIC = , M77= ,". . . Unable to solve equation for SBL in CKIN, re-check input data.

B. MESSAGES NOT CAUSING TERMINATION

1. Main Program

"NO CYLINDER ALL CYLINDER STRESSES NON-EXISTENT". . . CYLN was input as 1.0, if cylinder is required leave CYLN blank.

2. Subroutine CKIN

a. "RIGID MANDREL WINDING PRESSURE IS FICTICIOUS". . . The number of times this message is printed is the number of iterations that was required to establish a correct C value. If a pressure mandrel is desired, input SØLH.

b. "DESIGN PRESSURE INCONSISTENT WITH OTHER GIVEN DATA". . . Too many fixed variables, the program calculated a PD to satisfy other fixed input.

c. "LINER YIELDS IN COMPRESSION ON REDUCTION FROM WINDING PRESSURE TO ZERO PRESSURE". . . SYLC has been exceeded, re-check input data.

C. LIMITING CASES

A few limiting cases of interest to the pressure vessel designer have been input to the program in order to check out the programs' capabilities. All cases involved inputting zero for a particular parameter.

1. All Filament-Wound Pressure Vessel

In order to design a pressure vessel with no metal shell, a number with order of magnitude of 10^{-4} should be input for TL. If zero is input for TL, the program will terminate since division by this quantity is called for in the program.

2. All Metal-Shell Pressure Vessel

The input of TO = 0.0 to produce an all metal pressure vessel apparently produces good data. If CYLN = 1.0, the program will compute a sphere constructed entirely of metal.

3. Oblate Spheroids

The best estimate of C for an oblate spheroid is zero. Input of C = 0.0 may or may not terminate the program, and it is recommended that a value of C = .005 be used as an input estimate. The program will iterate around this value and produce a value of C with order of magnitude $\pm 10^{-5}$. A finite

length cylinder is always produced by the program, and this includes the oblate spheroid series. For an oblate spheroid, the cylinder length will always be $< 10^{-3}$ VLEN. This small section is, however, not introduced into vessel property calculations.

4. Metal-Shell Plastic Modulus

The plastic modulus of some candidate metal-shell materials is equal to zero. Since division by E1 is called for by the program, it is recommended that a value of 10^{-4} be used for E1 rather than zero.

D. SAMPLE PROBLEMS

Two examples are given in Appendix C which cover the main options available in the program.

Sample Case No. 1, Inconel Metal-Shell:

Wrap Pattern: Geodesic Isotensoid

Mandrel: Rigid

Vessel Type: Includes Cylindrical Section

Service Cycle: Two independent service cycle included

Sample Case No. 2, Titanium Metal-Shell:

Wrap Pattern: In-Plane-Wrap

Mandrel: Pressure Stabalized

Vessel Type: Oblate Spheroid

Service Cycle: None

VII. NOMENCLATURE

Fortran Symbol	Engineering Symbol	Description	Units
A	a	Vessel radius	in.
ABIG	tan γ	tangent of angle between plane of wrap and axis of vessel	-
ALFF	α_F	Coefficient of thermal expansion of composite	$\frac{in./in.}{^oF}$
ALFL	α_L	Coefficient of thermal expansion of metal shell	$\frac{in./in.}{^oF}$
ALPHA	α	Angle between meridian and filament	degrees
BIK	K	Filament fraction in composite	-
C	C	Distance from vessel axis to intersection of wrap plane with equator divided by radius, a (when used as input establish requirement in-plane wrap pattern).	-
CYLN	-	Flag for cylinder inclusion	-
DEFDT	$\frac{dE_f}{dt}$	Derivative of E_f with respect to temperature	psi/^oF
DEIDT	$\frac{dE_1}{dt}$	Derivative of E_1 with respect to temperature	psi/^oF
DELDT	$\frac{dE_L}{dt}$	Derivative of E_L with respect to temperature	psi/^oF
DNULDT	$\frac{d\nu_L}{dt}$	Derivative of ν_L with respect to temperature	1/^oF
DSYCDT	$\frac{d\sigma_{YLC}}{dt}$	Derivative of σ_{YLC} with respect to temperature	psi/^oF
DSYLDT	$\frac{d\sigma_{YL}}{dt}$	Derivative of σ_{YL} with respect to temperature	psi/^oF
DSYLHN	$\Delta\sigma_{YLH}$	Change in elastic yield strength of metal-shell in hoop direction	psi
DSYLN	$\Delta\sigma_{YL}$	Change in elastic yield strength of metal-shell in longitudinal direction	psi
EBL	e_{bL}	Design strain of metal-shell (uniaxial) in longitudinal direction	in./in.
EBLH	e_{bLH}	Design strain of metal-shell (uniaxial) in hoop direction	in./in.
EDL	e_{pL}	Biaxial strain of metal-shell in meridian direction at design pressure	in./in.
EDLH	e_{pLH}	Biaxial strain of metal-shell in hoop direction at design pressure	in./in.
EF	E_f	Elastic modulus of filaments at room temperature (must be > 0)	psi

Fortran Symbol	Engineering Symbol	Description	Units
EFC	e_{fc}	Strain of longitudinal filaments in cylinder	in./in.
EFD	e_{fd}	Meridian filament strain at design pressure	in./in.
EFHC	e_{fHC}	Strain of hoop filaments in cylinder	in./in.
EI	E_1	Plastic modulus of metal-shell at room temperature (must be > 0)	psi
EIT	E_{IT}	Plastic modulus of metal-shell at design temperature	psi
EL	E_L	Elastic modulus of metal-shell at room temperature (must be > 0)	psi
ELC	e_{LC}	Strain of metal-shell in longitudinal direction of cylinder	in./in.
ELHC	e_{LHC}	Strain of metal-shell in hoop direction of cylinder	in./in.
ELT	E_{LT}	Elastic modulus of metal-shell at design temperature	psi
ENF	e_{Nf}	Longitudinal filament strain for condition "N", service cycle	in./in.
ENFH	e_{NfH}	Hoop filament strain for condition "N", service cycle	in./in.
ENL	e_{NL}	Metal-shell strain in longitudinal direction for condition "N", service cycle	in./in.
ENLH	e_{NLH}	Metal-shell strain in hoop direction for condition "N", service cycle	in./in.
EØF	e_{of}	Meridian filament strain due to winding pressure at room temperature	in./in.
EØFP	e'_{of}	Meridian filament strain at zero pressure and room temperature	in./in.
EØFT	e_{ofT}	Meridian filament strain at zero pressure and design temperature	in./in.
EØL	e_{oL}	Meridian metal-shell strain due to winding pressure at room temperature	in./in.
EØLH	e_{oLH}	Hoop metal-shell strain due to winding pressure at room temperature	in./in.
EØLHP	e'_{oLH}	Hoop metal-shell strain at zero pressure and room temperature	in./in.
IØLHT	e_{oLHT}	Hoop metal-shell strain at zero pressure and design temperature	in./in.
EØLP	e'_{oL}	Meridian metal-shell strain at zero pressure and room temperature	in./in.
EØLT	e_{oLT}	Meridian metal-shell strain at zero pressure and design temperature	in./in.

Fortran Symbol	Engineering Symbol	Description	Units
K(KAYP)	k^*	Fraction of load taken by liner	-
PD	p_d	Design pressure	psi
PHI	ϕ	Angle between normal to surface and axis of vessel	degrees
P NEW	p_N	New pressure, service cycle	psi
PW	p_w	Winding pressure	psi
RHØG	ρ_g	Density of filament composite	$lb/in.^3$
RHØL	ρ_L	Density of metal-shell	$lb/in.^3$
R ØNE	r_1	Meridian radius of curvature	in.
R TWØ	r_2	Hoop radius of curvature	in.
SBL	σ_{bL}	Meridian design stress in metal-shell	psi
SBLH	σ_{bLH}	Hoop design stress in metal-shell	psi
SFC	σ_{fc}	Stress in longitudinal filaments of cylinder	psi
SFD	σ_{fd}	Design stress in meridian filaments	psi
SFHC	σ_{fHC}	Stress in hoop filaments of cylinder	psi
SLC	σ_{LC}	Longitudinal stres in metal-shell of cylinder	psi
SLHC	σ_{LHC}	Hoop stress in metal-shell of cylinder	psi
SNF	σ_{Nf}	Longitudinal filament stress for condition "N", service cycle	psi
SNFH	σ_{NfH}	Hoop filament stress for condition "N", service cycle	psi
SNL	σ_{NL}	Metal-shell stress in longitudinal direction for condition "N", service cycle	psi
SNLH	σ_{NLH}	Metal-shell stress in hoop direction for condition "N", service cycle	psi
SØF	σ_{of}	Meridian filament stress due to winding pressure	psi
SØFP	σ'_{of}	Meridian filament stress at zero pressure and room temperature	psi
SØFT	σ_{ofT}	Meridian filament stress at zero pressure and design temperature	psi
SØL	σ_{oL}	Meridian metal-shell stress due to winding pressure	psi
SØLH	σ_{oLH}	Hoop metal-shell stress due to winding pressure at room temperature	psi
SØLHP	σ'_{oLH}	Hoop metal-shell stress at zero pressure and room temperature	psi

Fortran Symbol	Engineering Symbol	Description	Units
SØLHT	σ_{oLHT}	Hoop metal-shell stress at zero pressure and design temperature	psi
SØLP	σ'_{oL}	Meridian metal-shell stress at zero pressure and room temperature	psi
SØLT	σ_{oLT}	Meridian metal-shell stress at zero pressure and design temperature	psi
SYL	σ_{YL}	Yield strength of meta-shell in tension	psi
SYLC	σ_{YLC}	Compressive yield strength of metal-shell (or buckling limit)	psi
SYLCT	σ_{YLCT}	Compressive yield strength of metal-shell at design temperature	psi
SYLT	σ_{YLT}	Tensile yield strength of metal-shell at design temperature	psi
T	t	Meridian composite thickness	in.
TDF	T_{df}	Design temperature of filaments	^oF
TDL	T_{dL}	Design temperature of metal-shell	^oF
TE	t_e	Equivalent filament thickness in meridian direction	in.
TF NEW	T_{NF}	New filament temperature, service cycle	^oF
THETA	θ	Polar angle	degrees
TL	t_L	Metal-shell thickness	in.
TL NEW	T_{NL}	New metal-shell temperature, service cycle	^oF
TØ	t_o	Meridian composite thickness at the equator	in.
TR	T_R	Room temperature	^oF
U	u	Dimensionless axial coordinate, y/a	-
VL	ν_L	Poisson's ratio of metal-shell at room temperature	-
VLEN	V_{Len}	Total vessel length	in.
VLT	ν_{LT}	Poisson's ratio of metal-shell at design temperature	-
X	x	Radial coordinate	in.
XFI	x_{fi}	Inner radial coordinate of meridian filaments	in.
XFØ	x_{fo}	Outer radial coordinate of meridian filaments	in.

Fortran Symbol	Engineering Symbol	Description	Units
XM	x_m	Mandrel radial coordinate	in.
XØ1	x_{o1}	Boss radius (must be > 0)	in.
XØ2	x_{o2}	Boss radius (must be > 0)	in.
Y	y	Axial coordinate	in.
YFI	y_{fi}	Inner axial coordinate of meridian filament	in.
YFØ	y_{fo}	Outer axial coordinate of meridian filament	in.
YM	y_m	Mandrel axial coordinate	in.
Z	z	Dimensionless radial coordinate, x/a	-

MAIN PROGRAM

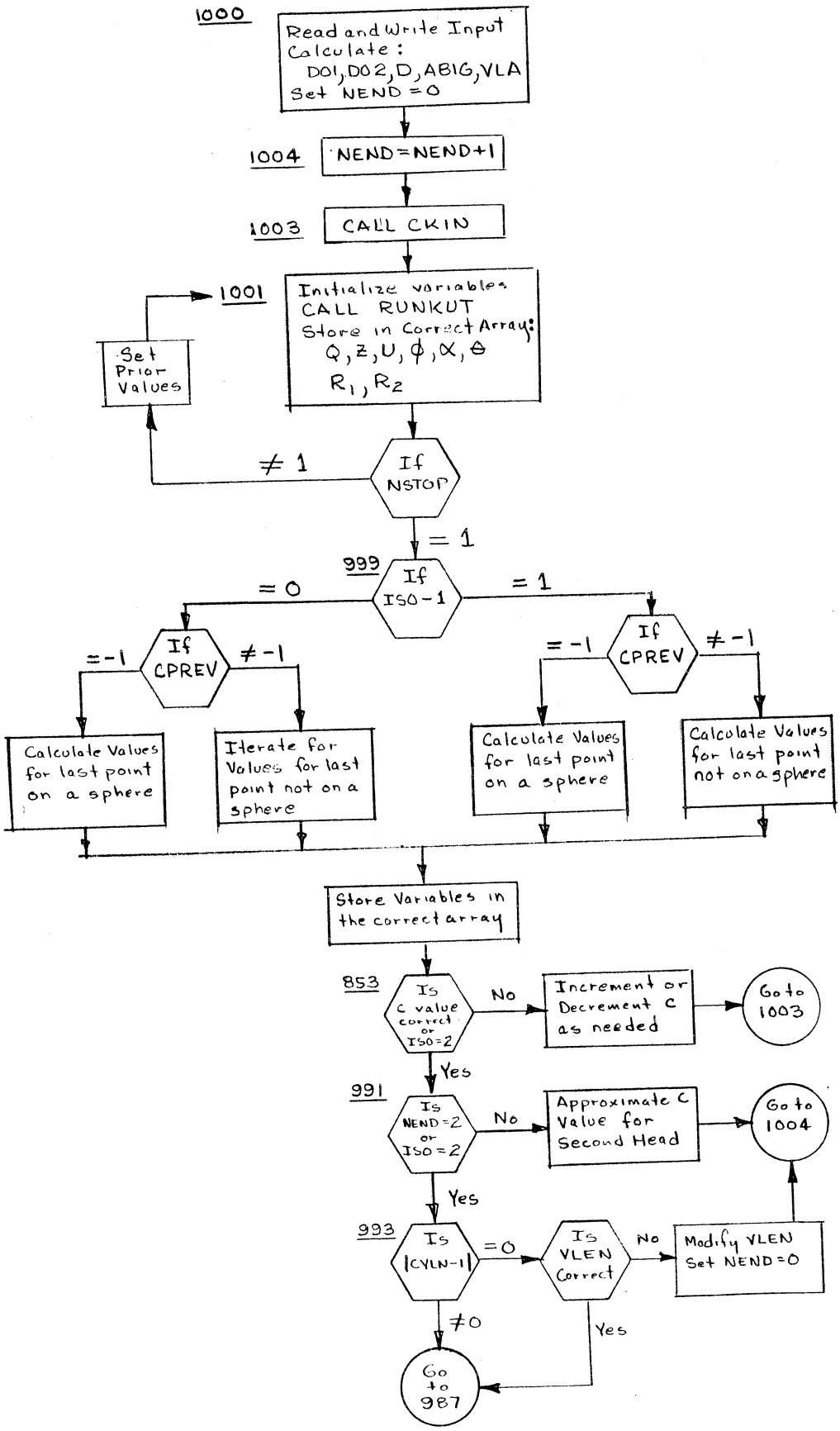

Fig. 1
Sheet 1 of 2

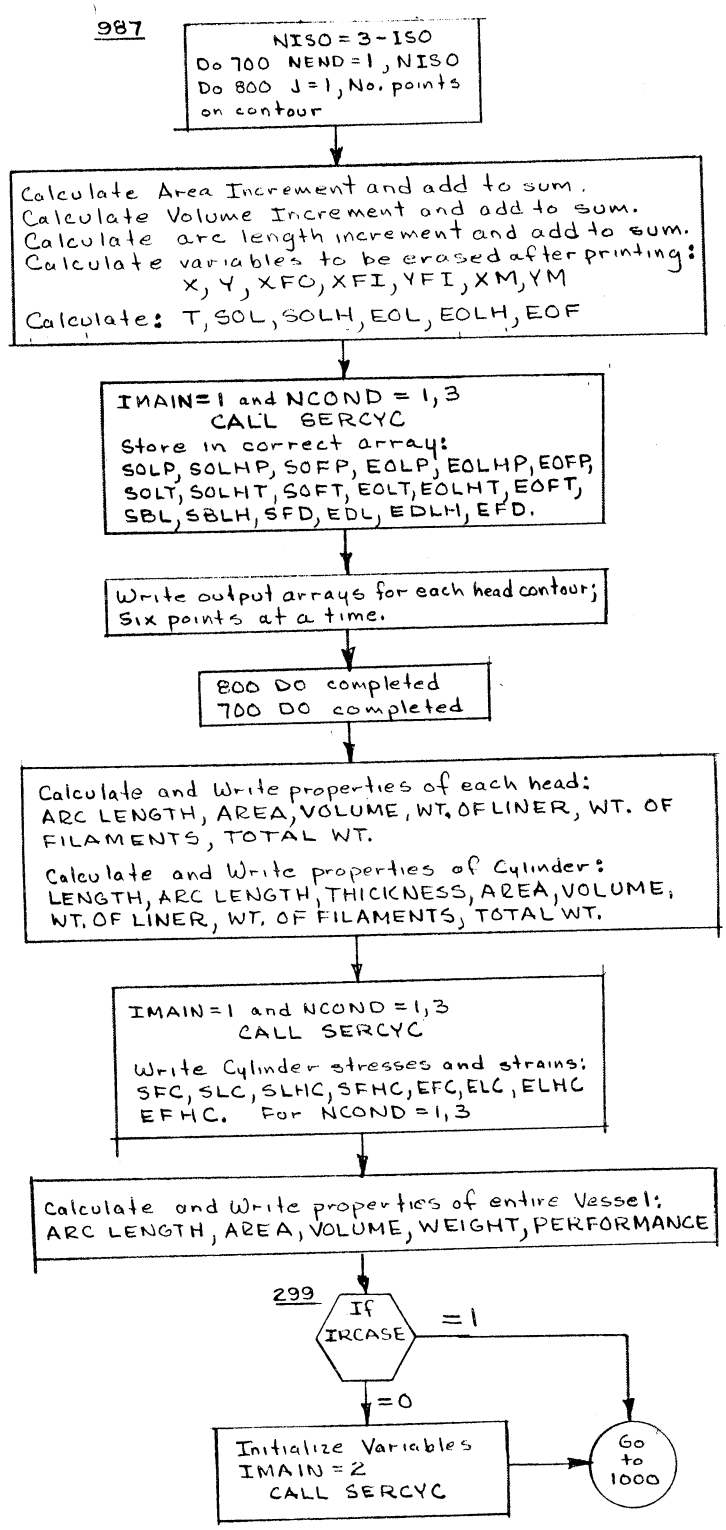

Fig. 1
Sheet 2 of 2

SUB-ROUTINE CKIN

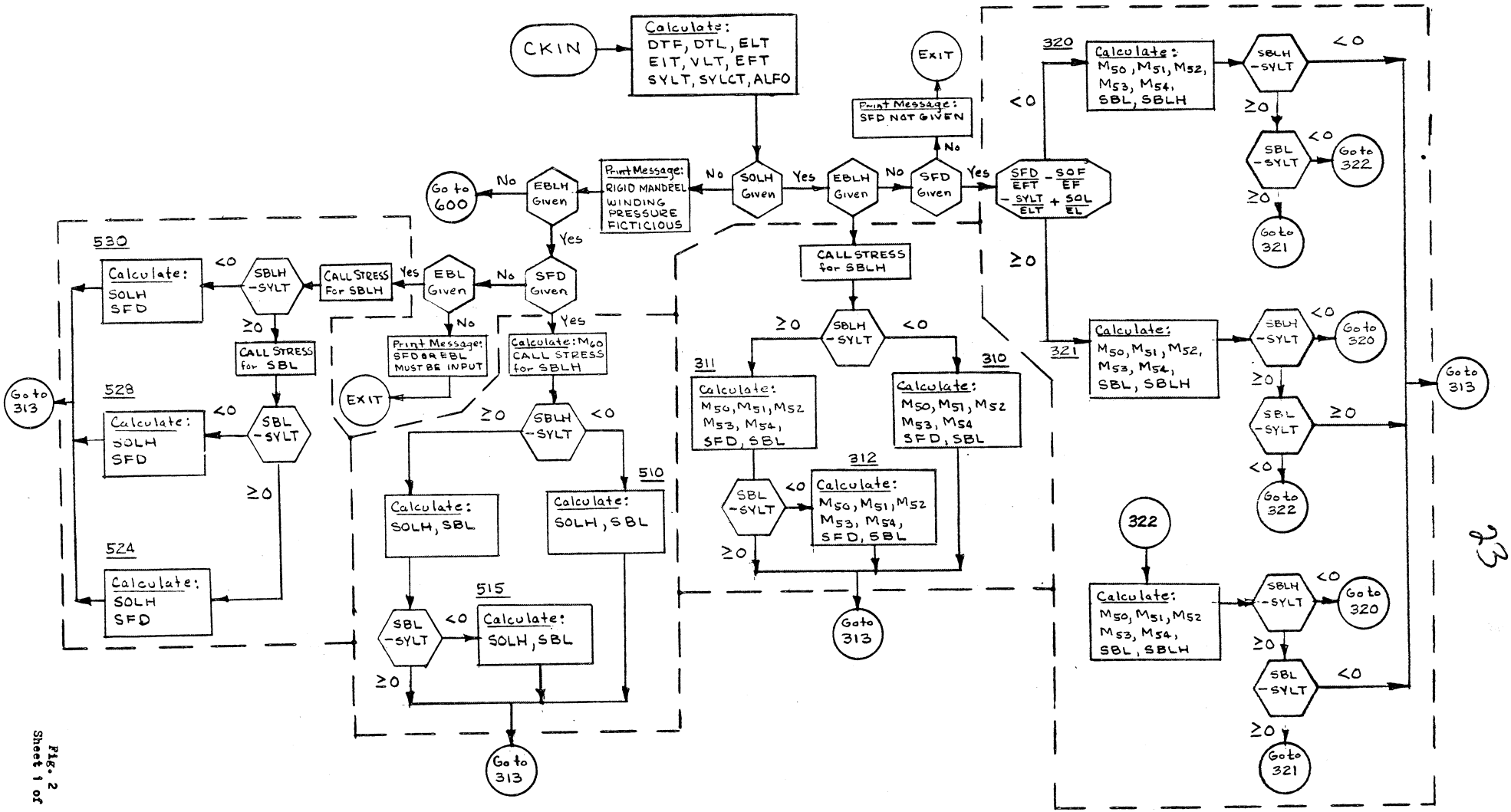

Fig. 2
Sheet 1 of 2

SUB-ROUTINE CKIN CONT.

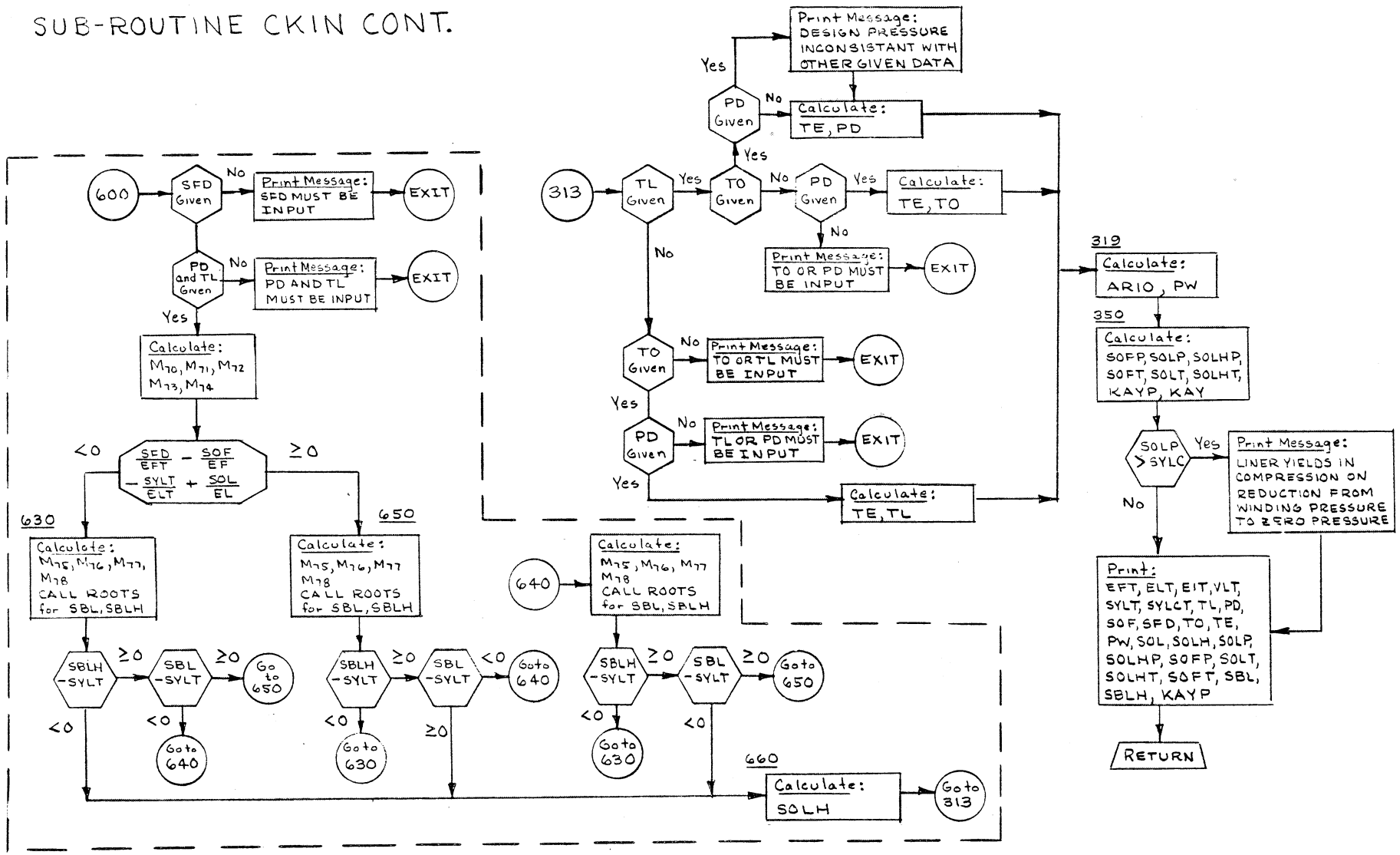

Fig. 2
Sheet 2 of 2

SUB-ROUTINE SERCYC

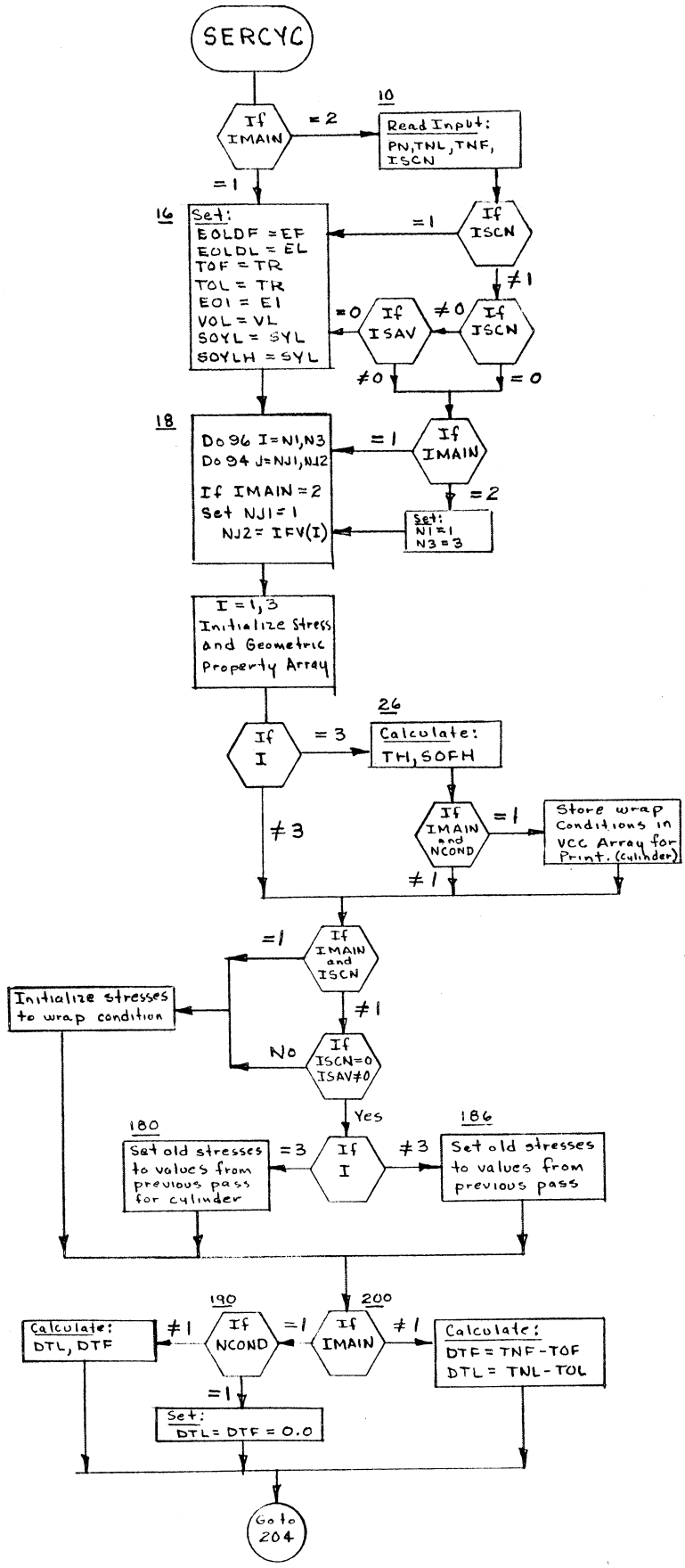

Fig. 3
Sheet 1 of 2

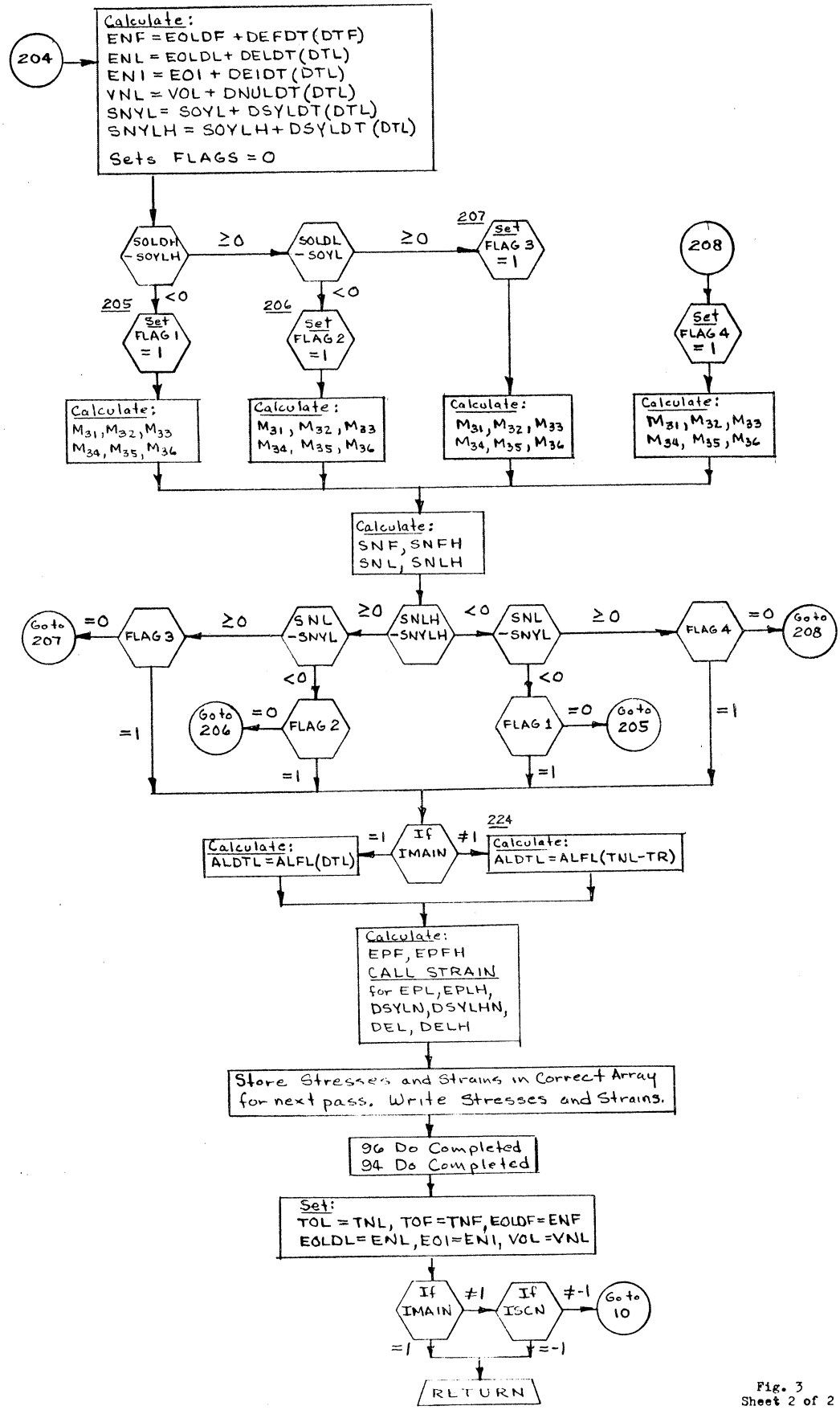

Fig. 3
Sheet 2 of 2

SUB-ROUTINE STRAIN

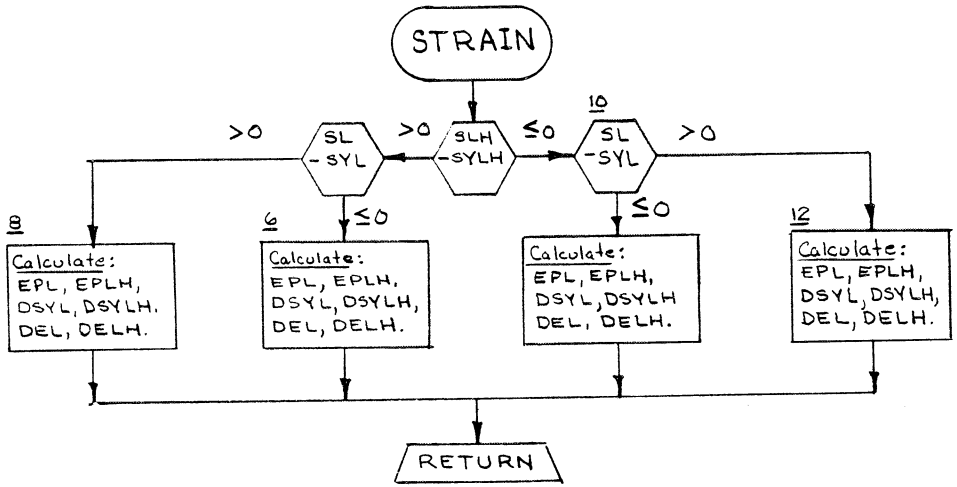

Fig. 4

APPENDIX A

ANALYSIS OF FILAMENT-WOUND-COMPOSITE PRESSURE VESSELS WITH LOAD-CARRYING LINERS

A/D-1-a

APPENDIX

ANALYSIS OF FILAMENT-WOUND-COMPOSITE PRESSURE VESSELS WITH LOAD-CARRYING LINERS

I. INTRODUCTION

The optimum pressure vessel may be described as one having equal margins of safety in all directions at all locations on the shell. This requires that the filament stresses be constant along their length and that the liner be subjected to a 1-to-1 stress field.

The analysis described in this appendix was established to comply with these requirements at a specified design pressure. Compliance with the requirement for a balanced stress field in the liner is not maintained for all conditions, however, because the physical responses of the liner and composite vary with the magnitude of the load and the direction of the fiber. The vessel design is therefore contingent on the design pressure as well as the dimensional and physical characteristics of the liner and composite.

The design of the optimum-performance pressure vessel must also meet criteria for efficient filament-reinforced composites: minimum resin stresses and continuity of fiber direction. Minimum resin stresses are achieved by fiber orientation and the equations of differential strains in principal directions (minimized change of fiber orientation with pressure). Continuity of fiber direction is obtained by equations in the analysis that establish the filament path.

Based on these criteria, the following design assumptions were made:

The filament stresses are constant along their length at the winding and design conditions.

The liner stresses are constant in the meridional direction at the design condition.

The changes in strains in the meridional and hoop directions are equal from the winding condition to the design condition.

Filament rotation is negligible as the pressure is increased or decreased from the winding pressure.

The resin-matrix effect is negligible (a netting analysis can be used).

Poisson's ratio for the composite is negligible.

Single temperature values can be used for the composite and liner for any given condition.

Additional assumptions required to reduce the complexity of the design included the following:

The thickness of the liner is constant for all points.

The differences in radii of curvature for the pressurized and unpressurized conditions are negligible.

The stress-strain relationship of the liner can be represented by two straight lines (i.e., primary and secondary moduli).

The stress-strain relationship of the filaments can be represented by a straight line.

Poisson's ratio for the metal is 1/2 in the plastic range.

The stress field in the liner approaches 1 to 1 when yield occurs and the biaxial yield point can be approximated by the uniaxial yield point.

II. ANALYSIS

The design and analysis of optimum filament-reinforced pressure vessels with load-carrying liners has been divided into five sections representing basic analytical operations: analysis of parameters, head design, cylinder design, structural analysis, and vessel characteristics.

The analysis of parameters was established to complete the dimensional and conditional parameters of the composite and liner structure at the equator of the head on the basis of known parameters and equilibrium and compatibility equations. Two primary methods of vessel fabrication are covered: fabrication on a rigid mandrel and fabrication on a pressure-stabilized liner.

The design of the head is based on the solution of a differential equation that describes both the balance of force field in the head and the path of the filaments on the surface of the vessel (i.e., planar path or helical path). Special solutions of the location of the surface of the head at a point nearest the axis are given, depending on the wrap pattern and the location of the inflection point in the differential equation.

The design of the cylindrical portion of the vessel provides the method of defining the thickness and wrap tension of the hoop filaments on the basis of design and wrapping conditions.

The structural analysis establishes equilibrium and compatibility equations for the analysis of the vessel designed by the foregoing procedures. Both stresses and strains are calculated on the basis of prior conditions in order to provide for the analysis of sequential conditions and permanent set of the vessel.

The vessel-characteristics section provides a method of establishing dimensional and performance parameters for the vessel, including (a) the arc length of the filament, (b) the surface area, (c) the weight of the composite, liner, and total vessel, (d) the internal volume, and (e) the performance factor of the vessel, pV/W.*

---

*Symbols are defined in a list at the end of this appendix.

A. ANALYSIS OF PARAMETERS

1. Compatibility and Equilibrium Equations at Equator

In order that the optimum shape of a filament-wound pressure vessel with a load-carrying liner may be defined, it is necessary to establish the equations of compatibility and equilibrium for the liner and the composite. This may be accomplished by equating the strains and defining the load distribution in both components.

For the analysis presented in this appendix, the following assumptions were used: (a) The winding always occurs at room temperature, T_R, and (b) the physical properties of both liner and composite vary in a straight-line relationship with temperature. For example,

$$E_{LT} = E_L + \frac{dE_L}{dT} \Delta T_L$$

where

$$\Delta T_L = T_{dL} - T_R$$

It was assumed that the liner, which may either be held rigid (zero stress and strain) or be under some internal pressure, is overwrapped with filaments, which are under a constant tension. It is desired to establish the thicknesses of liner and filaments in addition to their initial stresses so that the complete vessel will support a specified design pressure. At the design pressure, the filaments should be at a design stress (which may contain a safety factor) and the liner may be stressed past its yield point. Furthermore, the design conditions may include significant temperature changes, and the filaments and liners may be at different temperatures themselves.

When plastic flow is involved, the order of temperature or pressure application affects the final stress condition. It is therefore necessary to assume that the change from the winding temperature to the design temperature occurs at a condition below the yield stress of the liner.

The structural responses of the combined composite and liner vary with the direction (i.e., the vessel expands at different rates in the hoop and meridional directions). This variation demands that the change in strains in the hoop and meridional directions can only be equated between two conditions. Because the orientation and efficiency of the filaments are most critical at the design condition, this condition was chosen to complement the winding condition by maintaining equal strains and thus maintaining a zero net rotation of the fibers. The compatibility of the composite and liner strains at other design conditions was assumed to be governed by equal meridional strains, because the fiber direction at the equator will approach this direction for pressure-vessel designs considered in this study, where the diameter of the bosses and the wrap angles are small.

With the foregoing assumptions, the equations that follow govern the design at the equator of the head.

a. Equilibrium of Forces at Design Conditions

Meridional Direction

$$\sigma_{fd}\, t_e + \sigma_{bLT} t_L = \frac{p_d a}{2} \tag{1}$$

Hoop Direction

$$\sigma_{fd}\, t_e \tan^2 \alpha_o + \sigma_{bLHT}\, t_L = \frac{p_d a}{2} \left(2 - \frac{a}{r_{1,o}} \right) \tag{1a}$$

where

$$t_e = K t_o \cos^2 \alpha_o$$

b. Compatibility of Strains from Winding to Design Condition

Meridional Direction

$$\frac{\sigma_{fd}}{E_{fT}} - \frac{\sigma_{of}}{E_f} + \alpha_f \Delta T_f = e_{tL} - \frac{1}{E_L} (\sigma_{oL} - \nu_L \sigma_{oLH}) + \alpha_L \Delta T_L \tag{2}$$

Hoop Direction

$$\frac{\sigma_{fd}}{E_{fT}} - \frac{\sigma_{of}}{E_f} + \alpha_f \Delta T_f = e_{tLH} - \frac{1}{E_L} (\sigma_{oLH} - \nu_L \sigma_{oL}) + \alpha_L \Delta T_L \tag{2a}$$

where

e_{tL} and e_{tLH} are computed as follows:

<u>Condition 1</u>: $e_{bL} \leq \frac{\sigma_{yLT}}{E_{LT}}$ and $e_{bLH} \leq \frac{\sigma_{yLT}}{E_{LT}}$

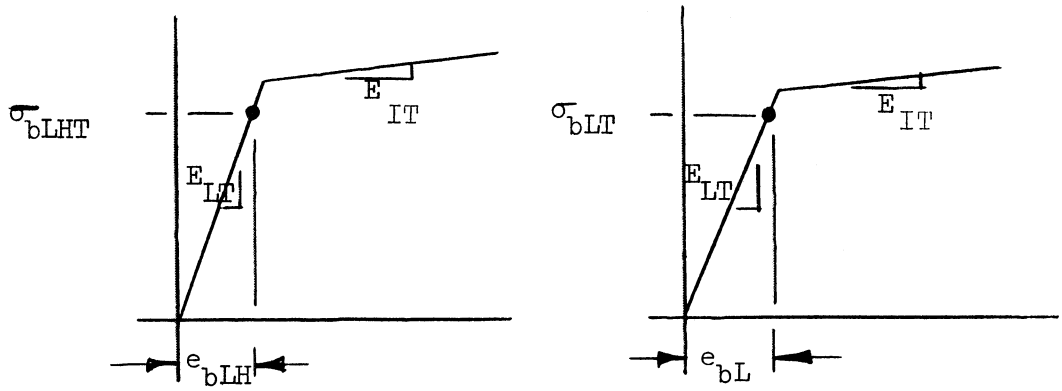

In the meridional direction,

$$e_{tL} = e_E + e_p$$

$$e_E = \frac{\sigma_{bLT}}{E_{LT}} - \nu_{LT} \frac{\sigma_{bLHT}}{E_{LT}}$$

$$e_p = 0$$

$$\therefore \quad e_{tL} = \frac{1}{E_{LT}} (\sigma_{bLT} - \nu_{LT} \ \sigma_{bLHT})$$

Since

$$e_{bL} = \frac{\sigma_{bLT}}{E_{LT}} \quad \text{and} \quad e_{bLH} = \frac{\sigma_{bLHT}}{E_{LT}}$$

then

$$e_{tL} = e_{bL} - \nu_{LT} \ e_{bLH}$$

Similarly, for the hoop direction,

$$e_{tLH} = \frac{1}{E_{LT}} (\sigma_{bLHT} - \nu_{LT} \ \sigma_{bLT})$$

$$e_{tLH} = e_{bLH} - \nu_{LT}\, e_{bL}$$

<u>Condition 2:</u> $e_{bL} < \dfrac{\sigma_{yLT}}{E_{LT}}$ and $e_{bLH} \geq \dfrac{\sigma_{yLT}}{E_{LT}}$

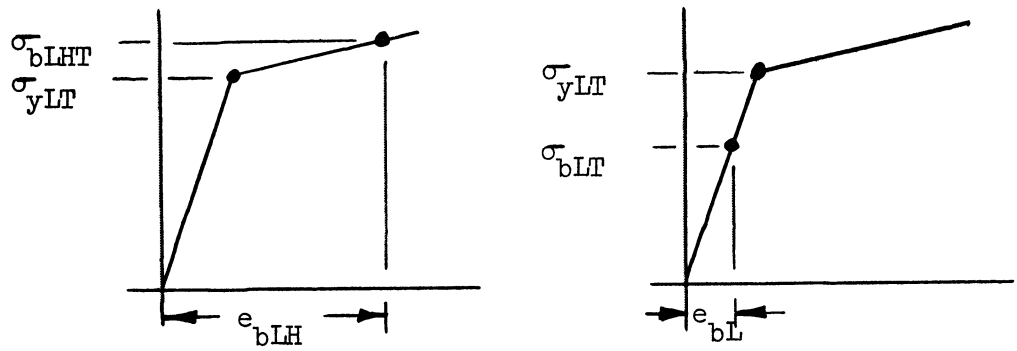

In the meridional direction,

$$e_{tL} = e_E + e_p$$

$$e_E = \frac{\sigma_{bLT}}{E_{LT}} - \nu_{LT}\frac{\sigma_{yLT}}{E_{LT}}$$

$$e_p = -\frac{1}{2}\,\frac{(\sigma_{bLHT} - \sigma_{yLT})}{E_{IT}}$$

$$\therefore\quad e_{tL} = \frac{\sigma_{bLT}}{E_{LT}} - \nu_{LT}\frac{\sigma_{yLT}}{E_{LT}} - \frac{1}{2}\,\frac{(\sigma_{bLHT} - \sigma_{yLT})}{E_{IT}}$$

$$= \frac{\sigma_{bLT}}{E_{LT}} - \frac{1}{2}\,\frac{(\sigma_{bLHT} - \sigma_{yLT})}{E_{IT}} - \frac{1}{2}\,\frac{\sigma_{yLT}}{E_{LT}} + \frac{1}{2}\,\frac{\sigma_{yLT}}{E_{LT}} - \nu_{LT}\frac{\sigma_{yLT}}{E_{LT}}$$

Since

$$e_{bL} = \frac{\sigma_{bLT}}{E_{LT}} \quad\text{and}\quad e_{bLH} = \frac{\sigma_{bLHT} - \sigma_{yLT}}{E_{IT}} + \frac{\sigma_{yLT}}{E_{LT}}$$

then

$$e_{tL} = e_{bL} - \frac{1}{2} e_{bLH} + \left(\frac{1}{2} - \nu_{LT}\right) \frac{\sigma_{yLT}}{E_{LT}}$$

For the hoop direction,

$$e_{tLH} = e_E + e_p$$

$$e_E = \frac{\sigma_{yLT}}{E_{LT}} - \nu_{LT} \frac{\sigma_{bLT}}{E_{LT}}$$

$$e_p = \frac{\sigma_{bLHT} - \sigma_{yLT}}{E_{IT}}$$

$$\therefore \quad e_{tLH} = \frac{\sigma_{bLHT} - \sigma_{yLT}}{E_{IT}} + \frac{\sigma_{yLT}}{E_{LT}} - \nu_{LT} \frac{\sigma_{bLT}}{E_{LT}}$$

and

$$e_{tLH} = e_{bLH} - \nu_{LT} e_{bL}$$

<u>Condition 3</u>: $e_{bL} > \frac{\sigma_{yLT}}{E_{LT}}$ and $e_{bLH} > \frac{\sigma_{yLT}}{E_{LT}}$

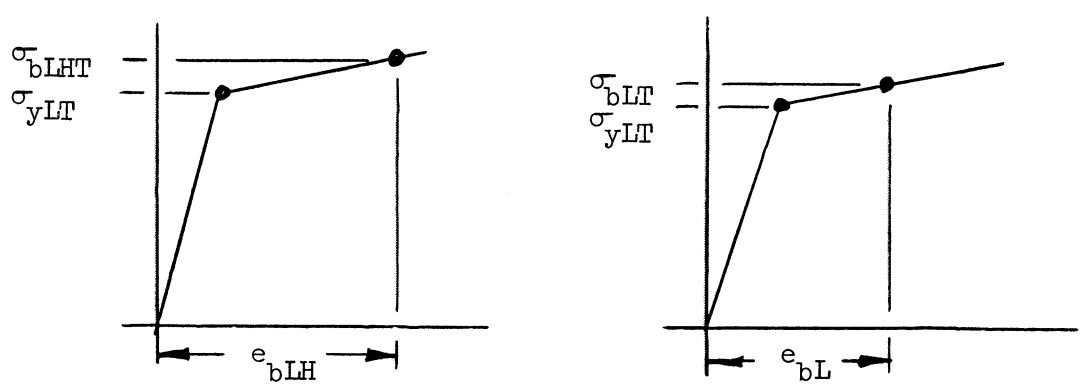

In the meridional direction,

$$e_{tL} = e_E + e_p$$

$$e_E = \frac{\sigma_{yLT}}{E_{LT}} - \nu_{LT} \frac{\sigma_{yLT}}{E_{LT}}$$

$$e_p = \frac{\sigma_{bLT} - \sigma_{yLT}}{E_{IT}} - \frac{1}{2} \frac{(\sigma_{bLHT} - \sigma_{yLT})}{E_{IT}}$$

$$\therefore \quad e_{tL} = \frac{\sigma_{yLT}}{E_{LT}} - \nu_{LT} \frac{\sigma_{yLT}}{E_{LT}} + \frac{\sigma_{bLT} - \sigma_{yLT}}{E_{IT}} - \frac{1}{2} \frac{(\sigma_{bLHT} - \sigma_{yLT})}{E_{IT}}$$

Since

$$e_{bL} = \frac{\sigma_{bLT} - \sigma_{yLT}}{E_{IT}} + \frac{\sigma_{yLT}}{E_{LT}}$$

and

$$e_{bLH} = \frac{\sigma_{bLHT} - \sigma_{yLT}}{E_{IT}} + \frac{\sigma_{yLT}}{E_{LT}}$$

then

$$e_{tL} = \frac{\sigma_{bLT} - \sigma_{yLT}}{E_{IT}} + \frac{\sigma_{yLT}}{E_{LT}} - \frac{1}{2} \frac{(\sigma_{bLHT} - \sigma_{yLT})}{E_{IT}} - \frac{1}{2} \frac{\sigma_{yLT}}{E_{LT}} + \frac{1}{2} \frac{\sigma_{yLT}}{E_{LT}} - \nu_{LT} \frac{\sigma_{yLT}}{E_{LT}}$$

and

$$e_{tL} = e_{bL} - \frac{1}{2} e_{bLH} + \left(\frac{1}{2} - \nu_{LT}\right) \frac{\sigma_{yLT}}{E_{LT}}$$

Similarly, for the hoop direction,

$$e_{tLH} = \frac{\sigma_{bLHT}}{E_{IT}} - \frac{\sigma_{bLT}}{2E_{IT}} + \left(\frac{1}{E_{LT}} - \frac{1}{2E_{IT}} - \frac{LT}{E_{LT}}\right) \sigma_{yLT}$$

$$= e_{bLH} - \frac{1}{2} e_{bL} + \left(\frac{1}{2} - \quad LT\right) \frac{\sigma_{yLT}}{E_{LT}}$$

<u>Condition 4:</u> $e_{bL} \geq \frac{\sigma_{yLT}}{E_{LT}}$ and $e_{bLH} < \frac{\sigma_{yLT}}{E_{LT}}$

The fourth condition, which assumes that the liner has yielded in the meridional direction and not yielded in the hoop direction, has been eliminated from consideration in the design of the vessel by the assumption that the hoop stress will always lead or be equal to the meridional stress at the design conditions.

c. Equilibrium at Zero Pressure and Design Temperature

Meridional Direction

$$\sigma_{ofT}\, t_e + \sigma_{oLT}\, t_L = 0 \tag{3}$$

Hoop Direction

$$\sigma_{ofT}\, t_e \tan^2 \alpha_o + \sigma_{oLHT}\, t_L = 0 \tag{3a}$$

d. Compatibility of Strains During Temperature Change at Zero Pressure

Meridional Direction

$$\frac{\sigma_{ofT}}{E_{fT}} - \frac{\sigma_{of}}{E_f} + \alpha_f\, \Delta T_f = \frac{(\sigma_{oLT} - \nu_{LT}\, \sigma_{oLHT})}{E_{LT}}$$

$$- \frac{(\sigma_{oL} - \nu_L\, \sigma_{oLH})}{E_L} + \alpha_L\, \Delta T_L \tag{4}$$

e. Equilibrium at Zero Pressure and Room Temperature

Meridional Direction

$$\sigma'_{of}\, t_e + \sigma'_{oL}\, t_L = 0 \tag{5}$$

Hoop Direction

$$\sigma'_{of}\, t_e \tan^2 \alpha_o + \sigma'_{oLH}\, t_L = 0 \tag{5a}$$

f. Compatibility of Strains When Relaxing from Winding Pressure

Meridional Direction

$$\frac{\sigma'_{of} - \sigma_{of}}{E_f} = \frac{\sigma'_{oL} - \nu_L\, \sigma'_{oLH}}{E_L} - \frac{\sigma_{oL} - \nu_L\, \sigma_{oLH}}{E_L} \tag{6}$$

g. Equilibrium of Forces at Winding Conditions

Meridional Direction

$$\sigma_{of}\, t_e + \sigma_{oL}\, t_L = \frac{p_w a}{2} \tag{7}$$

Hoop Direction

$$\sigma_{of}\, t_e \tan^2 \alpha_o + \sigma_{oLH}\, t_L = \frac{p_w a}{2}\left(2 - \frac{a}{r_{1,o}}\right) \tag{7a}$$

2. Solution of Equations

Eight force-equilibrium equations and four strain-compatibility equations are available for the determination of the 19 unknown variables shown in Table D-1. The wrap angle at the equator (α_o) can be approximated, and later verified, to eliminate one unknown, and the vessel radius (a), initial filament-winding stress (σ_{of}), and meridional stress in the liner at the wrap condition (σ_{oL}) are fixed to eliminate another three unknowns. Because strain compatibility from the wrap condition to the design condition is assumed, the four applicable equations [(1), (1a), (2), (2a)] involving eight of the remaining 15 unknowns may be satisfied first. The following cases, involving the nine remaining unknowns, are considered representative of conditions that may be expected in practice:

	Unknown Variables*							
Case No.	σ_{oLH}	σ_{fd}	$e_{bLH}(\sigma_{bLH})$	$e_{bL}(\sigma_{bL})$	t_L	t_o	p_d	$r_{1,o}$
1	X	X	-	-	(Two X, one -)			-
2	X	-	X	-	(Two X, one -)			-
3	-	X	X	-	(Two X, one -)			-
4	-	-	X	X	(Two X, one -)			-
5**	-	X	-	-	X	-	X	-

Two conditions can exist during winding: A rigid mandrel can be used to control the strains within the liner, or the liner can be stabilized by internal pressure. The first two cases in the tabulation above deal with the condition of fixed liner strain during winding (e.g., liner supported by rigid mandrel). In both rigid-mandrel cases, the hoop stress in the liner at the wrap condition (σ_{oLH}) is fixed.

For Case 1, σ_{fd} and two of the three variables t_L, t_o, and p_d are also fixed. The simultaneous solution of Equations (2) and (2a), subject to the fixed variables, results in the following equation for σ_{bLH}:***

$$\sigma_{bLH} = \frac{1}{M_{54}} \left[\frac{\sigma_{fd}}{E_{fT}} - \frac{\sigma_{of}}{E_f} + \frac{1}{E_L} (\sigma_{oL} - \nu_L \sigma_{oLH}) - \alpha_L \Delta T_L + \alpha_f \Delta T_f - \frac{M_{53}}{E_{LT}} + M_{55} \right] \quad (8)$$

For Case 2, e_{bLH} (σ_{bLH}) and two of the three variables t_L, t_o, and p_d are fixed in addition to σ_{oLH}. The solution of Equations (2) and (2a) is used to calculate σ_{fd} as follows:

---

*X denotes fixed, - denotes unfixed.

**Equations (7) and (7a) are used in the solution of this case in addition to Equations (1), (1a), (2), and (2a).

***All constants (M) are evaluated subsequently throughout this section.

$$\sigma_{fd} = E_{fT}\left[M_{54}\,\sigma_{bLH} + \frac{\sigma_{of}}{E_f} - \frac{1}{E_L}\left(\sigma_{oL} - \nu_L\,\sigma_{oLH}\right) + \alpha_L\,\Delta T_L - \alpha_f\,\Delta T_f + \frac{M_{53}}{E_{LT}} - M_{55}\right] \quad (9)$$

For both rigid-mandrel cases,

$$\sigma_{bL} = M_{52}\,\sigma_{bLH} + M_{53} \quad (10)$$

If t_L is given, Equation (1) reduces to

$$t_e = \frac{p_d a}{2\sigma_{fd}} - \frac{\sigma_{bL}\,t_L}{\sigma_{fd}} \quad (11)$$

If t_e is given, Equation (1) becomes

$$t_L = \frac{p_d a}{2\sigma_{bL}} - \frac{\sigma_{fd}\,t_e}{\sigma_{bL}} \quad (12)$$

From Equation (1a),

$$\frac{a}{r_{1,o}} = 2\left[1 - \frac{\sigma_{fd}\,t_e\,\tan^2\alpha_o}{p_d a} - \frac{t_L\,\sigma_{bLH}}{p_d a}\right] \quad (13)$$

Although the wrap pressure is fictitious for the rigid mandrel, it can be calculated from Equation (7) as

$$p_w = \frac{2}{a}\left[\sigma_{of}\,t_e + \sigma_{oL}\,t_L\right] \quad (14)$$

Unknown variables at other than the winding and design conditions are computed as follows:

$$\sigma'_{of} = \frac{\dfrac{\sigma_{of}}{E_f} - \left(\dfrac{\sigma_{oL} - \nu_L\,\sigma_{oLH}}{E_L}\right)}{\dfrac{1}{E_f} + \dfrac{1}{E_L}\left(\dfrac{t_e}{t_L}\right)\left(1 - \nu_L\tan^2\alpha_o\right)} \quad (15)$$

$$\sigma'_{oL} = -\frac{t_e}{t_L}\,\sigma'_{of} \quad (16)$$

$$\sigma'_{oLH} = -\frac{t_e}{t_L}\,\sigma'_{of}\,\tan^2\alpha_o \quad (17)$$

40

$$\sigma_{ofT} = \frac{\frac{\sigma_{of}}{E_f} - \left(\frac{\sigma_{oL} - \nu_L \sigma_{oLH}}{E_L}\right) + \alpha_L \Delta T_L - \alpha_f \Delta T_f}{\frac{1}{E_{fT}} + \frac{1}{E_{LT}} \left(\frac{t_e}{t_L}\right)(1 - \nu_{LT} \tan^2 \alpha_o)} \tag{18}$$

$$\sigma_{oLT} = - \frac{t_e}{t_L} \sigma_{ofT} \tag{19}$$

$$\sigma_{oLHT} = - \frac{t_e}{t_L} \sigma_{ofT} \tan^2 \alpha_o \tag{20}$$

The M constants depend upon whether the liner stresses exceed the yield or not:

<u>Condition 1</u>: σ_{bL} and $\sigma_{bLH} < \sigma_{yLT}$

$$M_{52} = 1.0$$

$$M_{53} = \frac{E_{LT}}{E_L} \left(\frac{1 + \nu_L}{1 + \nu_{LT}}\right) (\sigma_{oL} - \sigma_{oLH})$$

$$M_{54} = \frac{1 - \nu_{LT}}{E_{LT}}$$

$$M_{55} = 0.0$$

<u>Condition 2</u>: $\sigma_{bL} < \sigma_{yLT}$ and $\sigma_{bLH} \geq \sigma_{yLT}$

$$M_{52} = \frac{3\ E_{LT}}{2E_{IT}\ (1 + \nu_{LT})}$$

$$M_{53} = M_{52} \left\{ \frac{2\ E_{IT}\ (\sigma_{oL} - \sigma_{oLH})(1 + \nu_L)}{3\ E_L} - \sigma_{yLT} \left[1 - \frac{2\ E_{IT}\ (1 + \nu_{LT})}{3\ E_{LT}}\right] \right\}$$

$$M_{54} = \frac{M_{52}}{E_{LT}} - \frac{1}{2\ E_{IT}}$$

41

$$M_{55} = -\sigma_{yLT}\left[\frac{1}{2E_{IT}} - \nu_{LT}\left(\frac{1}{E_{LT}}\right)\right]$$

<u>Condition 3</u>: σ_{bL} and $\sigma_{bLH} \geq \sigma_{yLT}$

$$M_{52} = 1.0$$

$$M_{53} = \frac{2}{3}\left(\frac{E_{LT}}{E_L}\right)(1 + \nu_L)(\sigma_{oL} - \sigma_{oLH})$$

$$M_{54} = \frac{1}{2E_{IT}}$$

$$M_{55} = \sigma_{yLT}\left[\frac{1}{2E_{IT}} - \frac{(1 - \nu_{LT})}{E_{LT}}\right]$$

The remaining three cases deal with a pressure-stabilized mandrel. For Case 3, σ_{fd}, e_{bLH} (σ_{bLH}), and two of the three variables t_L, t_o, and p_d are fixed. As in Cases 1 and 2, the strain-compatibility equations between the wrap condition and the design condition [Equations (2) and (2a)] are solved simultaneously, subject to the position of the liner stress relative to the yield stress.

<u>Condition 1</u>: σ_{bL} and $\sigma_{bLH} < \sigma_{yLT}$

$$\sigma_{oLH} = \frac{E_L}{1 - \nu_L \nu_{LT}}\left[\frac{\sigma_{oL}}{E_L}(\nu_L - \nu_{LT}) + e_{bLH}(1 - \nu_{LT}^2) - M_{60}(1 + \nu_{LT})\right] \quad (21)$$

$$\sigma_{bL} = \sigma_{bLH} + \frac{E_{LT}(1 + \nu_L)}{E_L(1 + \nu_{LT})}(\sigma_{oL} - \sigma_{oLH}) \quad (22)$$

<u>Condition 2</u>: $\sigma_{bL} < \sigma_{yLT}$ and $\sigma_{bLH} \geq \sigma_{yLT}$

$$\sigma_{oLH} = \frac{E_L}{1 - \nu_L \nu_{LT}}\left[\frac{\sigma_{oL}}{E_L}(\nu_L - \nu_{LT}) + e_{bLH}\left(1 - \frac{\nu_{LT}}{2}\right) - M_{60}(1 + \nu_{LT}) + \nu_{LT}\left(\frac{1}{2} - \nu_{LT}\right)\frac{\sigma_{yLT}}{E_{LT}}\right] \quad (21a)$$

-12

$$\sigma_{bL} = \frac{E_{LT}}{1 + \nu_{LT}} \left[\frac{3(\sigma_{bLH} - \sigma_{yLT})}{2E_{IT}} + (1 + \nu_{LT}) \frac{\sigma_{yLT}}{E_{LT}} + \frac{(1 + \nu_L)(\sigma_{oL} - \sigma_{oLH})}{E_L} \right] \quad (22a)$$

<u>Condition 3</u>: σ_{bL} and $\sigma_{bLH} \geq \sigma_{yLT}$

$$\sigma_{oLH} = \frac{E_L}{1 - \frac{\nu_L}{2}} \left[\frac{\sigma_{oL}}{E_L} (\nu_L - \frac{1}{2}) + \frac{3}{4} e_{bLH} - \frac{3}{2} M_{60} + \frac{3}{2} (\frac{1}{2} - \nu_{LT}) \frac{\sigma_{yLT}}{E_{LT}} \right] \quad (21b)$$

$$\sigma_{bL} = \sigma_{bLH} + \frac{2E_{IT} (1 + \nu_L)}{3 E_L} (\sigma_{oL} - \sigma_{oLH}) \quad (22b)$$

For the three conditions of liner stress, the constant M_{60} is evaluated as follows:

$$M_{60} = \frac{\sigma_{fd}}{E_{ft}} - \frac{\sigma_{of}}{E_f} + \alpha_f \Delta T_f - \alpha_L \Delta T_L$$

The remainder of the unknown variables are calculated from the same equations used for Cases 1 and 2 [see Equations (11) through (20)].

For Case 4, e_{bLH} (σ_{bLH}), e_{bL} (σ_{bL}), and two of the three variables t_L, t_o, and p_d are fixed.

<u>Condition 1</u>: σ_{bL} and $\sigma_{bLH} < \sigma_{yLT}$

$$\sigma_{oLH} = \sigma_{oL} + \frac{E_L (1 + \nu_{LT})}{1 + \nu_L} (e_{bLH} - e_{bL}) \quad (23)$$

$$\sigma_{fd} = E_{ft} \left[M_{70} + \frac{1}{E_{LT}} (\sigma_{bL} - \nu_{LT} \sigma_{bLH}) \right] \quad (24)$$

<u>Condition 2</u>: $\sigma_{bL} < \sigma_{yLT}$ and $\sigma_{bLH} \geq \sigma_{yLT}$

$$\sigma_{oLH} = \sigma_{oL} + \frac{E_L}{1 + \nu_L} \left[\frac{3}{2} e_{bLH} - (1 + \nu_{LT}) e_{bL} - (\frac{1}{2} - \nu_{LT}) \frac{\sigma_{yLT}}{E_{LT}} \right] \quad (23a)$$

$$\sigma_{fd} = E_{fT} \left[M_{70} + \frac{\sigma_{bL}}{E_{LT}} - \frac{\sigma_{bLH}}{2E_{IT}} + \left(\frac{1}{2E_{IT}} - \frac{\nu_{LT}}{E_{LT}} \right) \sigma_{yLT} \right] \quad (24a)$$

Condition 3: σ_{bL} and $\sigma_{bLH} \geq \sigma_{yLT}$

$$\sigma_{oLH} = \sigma_{oL} + \frac{3E_L}{2(1 + \nu_L)} (e_{bLH} - e_{bL}) \tag{23b}$$

$$\sigma_{fd} = E_{fT} \left[M_{70} + \frac{\sigma_{bL}}{E_{IT}} - \frac{\sigma_{bLH}}{2E_{IT}} + \left(\frac{1}{E_{LT}} - \frac{1}{2E_{IT}} - \frac{\nu_{LT}}{E_{LT}} \right) \sigma_{yLT} \right] \tag{24b}$$

The constant M_{70} is determined from

$$M_{70} = \frac{\sigma_{of}}{E_f} + \alpha_L \Delta T_L - \alpha_f \Delta T_f - \frac{1}{E_L} (\sigma_{oL} - \nu_L \sigma_{oLH})$$

and all other unknown variables are calculated as in Cases 1 through 3 [see Equations (11) through (20)].

In Case 5, σ_{fd}, t_L, and p_d are fixed. Six equations [(1), (1a), (2), (2a), (7), and (7a)] are solved simultaneously to provide equations for pressure-mandrel solutions with minimum variable fixation. These equations introduce an additional variable, p_w, which must be determined in addition to other unknown variables related to the winding and design conditions. The longitudinal stress in the liner at the design condition (σ_{bL}) is calculated from the general quadratic equation:

$$\sigma_{bL} = \frac{M_{77} \pm \sqrt{M_{77}^2 - 4M_{78}}}{2} \tag{25}$$

and the initial hoop stress in the liner at the wrap condition (σ_{oLH}) is

$$\sigma_{oLH} = M_{70} - M_{71} \sigma_{bL} + M_{72} \tan^2 \alpha_o \sigma_{bL}^2 - M_{72} \sigma_{bL} \sigma_{bLH} + M_{73} \sigma_{bLH} \tag{26}$$

where the constants M, which do not depend on liner stress, are as follows:

$$M_{70} = \sigma_{oL} \tan^2 \alpha_o$$

$$M_{71} = \frac{\sigma_{of}}{\sigma_{fd}} \tan^2 \alpha_o + \frac{2t_L \sigma_{oL}}{p_d a} \tan^2 \alpha_o$$

$$M_{72} = \frac{\sigma_{of}}{\sigma_{fd}} \left(\frac{2 t_L}{p_d a} \right)$$

44

$$M_{73} = \frac{\sigma_{of}}{\sigma_{fd}} + \frac{2\ t_L\ \sigma_{oL}}{p_d a}$$

$$M_{74} = \frac{\sigma_{fd}}{E_{ft}} - \frac{\sigma_{of}}{E_f} - \alpha_L\ \Delta T_L + \alpha_f\ \Delta T_f$$

All other M values in Equations (25) and (26) and the hoop stress in the liner at the design condition (σ_{bL}) depend on the design condition of liner stress relative to the yield stress:

<u>Condition 1</u>: σ_{bL} and $\sigma_{bLH} < \sigma_{yLT}$

$$M_{75} = M_{74} - \frac{\nu_L\ \sigma_{oL}}{E_L} + \frac{M_{70}}{E_L} - \frac{1}{(1 - \nu_{LT})} \left\{ (1 + \nu_L)\ M_{74} + \frac{\sigma_{oL}}{E_L}(1 - \nu_L^2) + \frac{M_{73}}{E_L}\left[(1 + \nu_{LT})\ E_{LT}\ M_{74} + \frac{E_{LT}}{E_L}\ \sigma_{oL}\ (1 - \nu_L^2) \right] \right\}$$

$$M_{76} = \frac{E_{LT}\ (1 + \nu_L)\ M_{74}\ M_{72}}{E_L\ (1 - \nu_{LT})} - \frac{(1 + \nu_{LT})}{E_{LT}} + \frac{M_{71}}{E_L} + \frac{E_{LT}\ \sigma_{oL}\ (1 - \nu_L^2)\ M_{72}}{E_L^2\ (1 - \nu_{LT})} + \frac{M_{73}}{E_L}$$

$$M_{77} = \frac{E_L\ M_{76}}{M_{72}\ (1 + \tan^2 \alpha_o)}$$

$$M_{78} = \frac{E_L\ M_{75}}{M_{72}\ (1 + \tan^2 \alpha_o)}$$

$$\sigma_{bLH} = \frac{1}{1 - \nu_{LT}} \left[(1 + \nu_L)\ E_{LT}\ M_{74} + \frac{E_{LT}\ \sigma_{oL}\ (1 - \nu_L^2)}{E_L} - \sigma_{bL}\ (1 - \nu_{LT}) \right] \qquad (27)$$

45

Condition 2: $\sigma_{bL} < \sigma_{yLT}$ and $\sigma_{bLH} \geq \sigma_{yLT}$

$$M_{75} = M_{74} - \frac{\nu_L \sigma_{oL}}{E_L} + \frac{M_{70}}{E_L} - \frac{(M_{73} E_I - E_L)}{E_L (\frac{1}{2} + \nu_L)} \left[(1 + \nu_L) M_{74} + \frac{\sigma_{oL}(1 - \nu_L^2)}{E_L} \right.$$

$$\left. + \sigma_{yLT} \left(\frac{\nu_{LT}}{E_{LT}} + \frac{1}{2E_I} - \frac{\nu_L}{E_{LT}} + \frac{\nu_L}{E_I} \right) \right] - \sigma_{yLT} \left(\frac{1}{E_{LT}} - \frac{1}{E_I} \right)$$

$$M_{76} = \frac{M_{72} E_I}{E_L(\frac{1}{2} + \nu_L)} \left\{ (1 + \nu_L) M_{74} + \frac{\sigma_{oL} (1 - \nu_L^2)}{E_L} \right.$$

$$\left. + \sigma_{yLT} \left(\frac{\nu_{LT}}{E_{LT}} + \frac{1}{2E_I} - \frac{\nu_L}{E_{LT}} + \frac{\nu_L}{E_I} \right) \right\} + \frac{M_{71}}{E_L} - \frac{\nu_{LT}}{E_{LT}}$$

$$+ (M_{73} E_I - E_L) \left[\frac{(1 - \nu_L \nu_{LT})}{E_L E_{LT} (\frac{1}{2} + \nu_L)} \right]$$

$$M_{77} = \frac{E_L E_{LT} (\frac{1}{2} + \nu_L) M_{76}}{M_{72} \left[E_{LT} \tan^2 \alpha_o (\frac{1}{2} + \nu_L) + E_I (1 - \nu_L \nu_{LT}) \right]}$$

$$M_{78} = \frac{E_L E_{LT} (\frac{1}{2} + \nu_L) M_{75}}{M_{72} \left[E_{LT} \tan^2 \alpha_o (\frac{1}{2} + \nu_L) + E_I (1 - \nu_L \nu_{LT}) \right]}$$

$$\sigma_{bLH} = \frac{E_I}{(\frac{1}{2} + \nu_L)} \left[(1 + \nu_L) M_{74} + \frac{\sigma_{oL} (1 - \nu_L^2)}{E_L} \right.$$

$$\left. + \sigma_{yLT} \left(\frac{\nu_{LT}}{E_{LT}} + \frac{1}{2E_I} - \frac{\nu_L}{E_{LT}} + \frac{\nu_L}{E_I} \right) - \frac{\sigma_{bL}}{E_L} (1 - \nu_L \nu_{LT}) \right] \qquad (27a)$$

Condition 3: σ_{bL} and $\sigma_{bLH} \geq \sigma_{yLT}$

$$M_{75} = M_{74} - \frac{\nu_L \sigma_{oL}}{E_L} + \frac{M_{70}}{E_L} + \frac{(M_{73} E_I - E_L)}{E_L (\nu_L - \frac{1}{2})} \left\{ (1 + \nu_L) M_{74} + \frac{\sigma_{oL}(1 - \nu_L^2)}{E_L} \right.$$

$$- \sigma_{yLT} (1 + \nu_L) \left[\frac{(1 - \nu_{LT})}{E_{LT}} - \frac{1}{2E_I} \right] \Bigg\} - \sigma_{yLT} \left[\frac{(1 - \nu_{LT})}{E_{LT}} - \frac{1}{2E_I} \right]$$

$$M_{76} = \frac{M_{72} E_I}{E_L(\nu_L - \frac{1}{2})} \Bigg\{ (1 + \nu_L) M_{74} + \frac{\sigma_{oL} (1 - \nu_L^2)}{E_L}$$

$$- \sigma_{yLT} (1 + \nu_L) \left[\frac{(1 - \nu_{LT})}{E_{LT}} - \frac{1}{2E_I} \right] \Bigg\} + \frac{M_{71}}{E_L} - \frac{1}{2E_I}$$

$$+ (M_{73} E_I - E_L) \left[\frac{(1 - \frac{\nu_L}{2})}{E_L E_I (\nu_L - \frac{1}{2})} \right]$$

$$M_{77} = \frac{E_L (2 \nu_L - 1) M_{76}}{M_{72} \left[(2 - \nu_L) + (2\nu_L - 1) \tan^2 \alpha_o \right]}$$

$$M_{78} = \frac{E_L (2\nu_L - 1) M_{75}}{M_{72} \left[(2 - \nu_L) + (2\nu_L - 1) \tan^2 \alpha_o \right]}$$

$$\sigma_{bLH} = \frac{E_I}{\nu_L - \frac{1}{2}} \Bigg\{ (1 + \nu_L) M_{74} + \frac{\sigma_{oL} (1 - \nu_L^2)}{E_L}$$

$$- \sigma_{yLT} (1 + \nu_L) \left[\frac{(1 - \nu_{LT})}{E_{LT}} - \frac{1}{2E_I} \right] - \frac{\sigma_{bL} (1 - \frac{\nu_L}{2})}{E_I} \Bigg\} \qquad (27b)$$

The remaining variables are again calculated from the remaining equations used in Cases 1 through 4.

B. HEAD DESIGN

The load carried by the filaments at the design pressure is the internal-pressure load minus the load carried by the liner. The liner's meridional load at the design pressure will be constant because of the assumption of constant thickness and constant meridional liner stress. The liner load in

the hoop direction will differ from the load in the meridional direction and will vary along the surface of the head because of differences in load proportionment in the filaments and liner caused by winding-angle variation and components of filament stress.

Using the geometric notation of Figure D-1, the equilibrium equations are

$$N_{\phi} = N_{\phi L} + N_{\phi F} = \frac{pr_2}{2} \tag{28}$$

and

$$N_{\theta} = N_{\theta L} + N_{\theta f} = \frac{pr_2}{2}\left(2 - \frac{r_2}{r_1}\right) \tag{29}$$

The netting analysis, which assumes that the composite loads are all carried by tension in the filaments, requires that

$$\frac{N_{\theta f}}{N_{\phi f}} = \tan^2 \alpha \tag{30}$$

Because the meridional stress in the liner is constant at all points on the contour at the design pressure

$$N_{\phi L} = \sigma_{bLT}\, t_L = k_1 \frac{p_d a}{2} \tag{31}$$

the liner hoop loads can be expressed as

$$N_{\theta L} = \sigma_{bLHT}\, t_L = N_{\phi L} + \Delta N_L \left(1 - \tan^2 \alpha\right) \tag{31a}$$

where

$$\Delta N_L = \left(\frac{\sigma_{bLH} - \sigma_{bL}}{1 - \tan^2 \alpha_o}\right) t_L \tag{31b}$$

Thus,

$$\tan^2 \alpha = \frac{\frac{r_2}{a}\left(2 - \frac{r_2}{r_1}\right) - k}{\frac{r_2}{a} - k} \tag{32}$$

where

$$k = k_1 + \frac{2\Delta N_L}{p_d a} \tag{32a}$$

The radii of curvature can be expressed in geometric coordinates as*

$$\frac{r_1}{a} = \frac{-\left[1 + (u')^2\right]^{3/2}}{u''} \tag{33}$$

and

$$\frac{r_2}{a} = \frac{-Z\left[1 + (u')^2\right]^{1/2}}{u'} \tag{34}$$

where

$$u = \frac{y}{a} \tag{35}$$

and

$$Z = \frac{x}{a} \tag{36}$$

For a geodesic isotensoid** of $D = \frac{x_o}{a}$,

$$\sin \alpha = \frac{x_o}{x} = \frac{D}{Z} \tag{37}$$

---

*Improved Filament-Wound Construction for Cylindrical Pressure Vessels, Technical Documentary Report ML-TDR-64-43, Vol. I (prepared by Aerojet-General under Contract AF 33(616)-8442), March 1964, p. 13.

**Ibid., p. 14.

$$\tan^2 \alpha = \frac{\sin^2 \alpha}{\cos^2 \alpha} = \frac{\sin^2 \alpha}{1 - \sin^2 \alpha} = \frac{D^2}{Z^2 - D^2} \tag{38}$$

For in-plane patterns,*

$$\tan \alpha = \frac{\tan \gamma \sin \phi + \cos \phi \cos \theta}{\sin \theta} \tag{39}$$

From Equation (14),

$$r_2 = \frac{-Za}{u'} \left[1 + (u')^2\right]^{1/2} \tag{34a}$$

From Figure D-1,

$$\sin \phi = - \frac{x}{r_2} = \frac{x\, u'}{Z\, a \left[1 + (u')^2\right]^{1/2}} = \frac{u'}{\left[1 + (u')^2\right]^{1/2}} \tag{40}$$

$$\tan \phi = \frac{dy}{dx} = \frac{du}{dZ} = u' \tag{41}$$

$$\cos \phi = \frac{\sin \phi}{\tan \phi} = \frac{1}{\left[1 + (u')^2\right]^{1/2}} \tag{42}$$

Thus Equation (39) becomes

$$\tan \alpha = \frac{\tan \gamma\, (u') + \cos \theta}{\sin \theta \left[1 + (u')^2\right]^{1/2}} \tag{39a}$$

$$\tan^2 \alpha = \frac{\left[\tan \gamma\, (u') + \cos \theta\right]^2}{\sin^2 \theta \left[1 + (u')^2\right]} \tag{43}$$

---

* Ibid., p. 16.

From Figure D-2,

$$\cos\theta = \frac{y \tan\gamma + Ca}{x} = \frac{u \tan\gamma + C}{Z} \tag{44}$$

$$\sin\theta = \frac{\left[x^2 - (y \tan\gamma + Ca)^2\right]^{1/2}}{x} = \frac{\left[Z^2 - (u \tan\gamma + C)^2\right]^{1/2}}{Z} \tag{45}$$

With

$$u' = \frac{1}{Q}$$

$$\tan^2\alpha = \frac{\left[\frac{Z}{Q}\tan\gamma + u \tan\gamma + C\right]^2}{\left[Z^2 - (u \tan\gamma + C)^2\right]\left[1 + \left(\frac{1}{Q}\right)^2\right]} = \frac{\left[Z \tan\gamma + (u \tan\gamma + C)\, Q\right]^2}{(1 + Q^2)\left[Z^2 - (u \tan\gamma + C)^2\right]} \tag{46}$$

Substituting Equations (33) and (34) into Equation (32), the differential equation becomes

$$\tan^2\alpha = \frac{\dfrac{-Z\left[1 + (u')^2\right]^{1/2}}{u'}\left[2 - \dfrac{Z\,u''}{u'\left[1 + (u')^2\right]}\right] - k}{\dfrac{-Z\left[1 + (u')^2\right]^{1/2}}{u'} - k} \tag{32a}$$

Setting

$$Q = \frac{1}{u'}$$

then

$$u' = \frac{du}{dZ} = \left(\frac{1}{Q}\right)$$

and

$$u'' = \frac{d(u')}{dZ} = \frac{d}{du}\left(\frac{1}{Q}\right)\frac{du}{dZ} = -\frac{1}{Q^3}\,\frac{dQ}{du}$$

Thus

$$\tan^2\alpha = \frac{-ZQ\left[1+\left(\frac{1}{Q}\right)^2\right]^{1/2}\left\{2-\dfrac{\frac{-Z}{Q^3}\frac{dQ}{du}}{\frac{1}{Q}\left[1+\left(\frac{1}{Q}\right)^2\right]}\right\}-k}{-ZQ\left[1+\left(\frac{1}{Q}\right)^2\right]^{1/2}-k}$$

$$= \frac{Z\,(Q^2+1)^{1/2}\left[2+\dfrac{Z\frac{dQ}{du}}{Q^2+1}\right]-k}{Z\,(Q^2+1)^{1/2}-k} \tag{32b}$$

Solving for $\frac{dQ}{du}$,

$$\frac{dQ}{du} = \frac{2\,(Q^2+1)}{Z}\left\{\frac{\tan^2\alpha\left[Z\,(Q^2+1)^{1/2}-k\right]+k}{2Z\,(Q^2+1)^{1/2}}-1\right\}$$

$$= \frac{2\,(Q^2+1)}{Z}\left[\frac{-k\,(\tan^2\alpha-1)+Z\,(Q^2+1)^{1/2}\,(\tan^2\alpha-2)}{2Z\,(Q^2+1)^{1/2}}\right]$$

$$= \frac{2\,(Q^2+1)^{1/2}}{Z}\left[\frac{-k}{2Z}\,(\tan^2\alpha-1)+(Q^2+1)^{1/2}\,(1/2\,\tan^2\alpha-1)\right] \tag{47}$$

where $\tan^2\alpha$ is defined by Equations (38) and (46) for the geodesic-isotensoid and in-plane patterns, respectively.

Equation (47) is solved by Runge-Kutta integration using a high-speed digital computer, noting the following boundary conditions at the equator of the head: $Z = 1$, $u = 0$, and $Q = 0$.

Filament-wound pressure vessels contain an inflection point that, for vessels without a load-carrying liner ($k = 0$), occurs at $\alpha = \tan^{-1}\sqrt{2}$.

This inflection, which occurs when Equation (47) changes sign, is also present in the vessel configurations derived for filament-wound vessels with load-carrying liners. As seen in Equation (47), the change in sign occurs at $\alpha = 45^{\circ}$. Because there is a discontinuity when Equation (47) changes sign and because Equation (47) $\longrightarrow \infty$ when α $\pi/2$ or $\theta \longrightarrow 0^{\circ}$, special equations must be written for the last point on the contour ($\alpha = \pi/2$). There are four areas of concern:

1. The in-plane wrap where the next-to-last point is on a sphere (i.e., the point is past the inflection point).

2. The next-to-last point of an in-plane wrap is on the true contour (i.e., the inflection point has not occurred).

3. Equivalent of first area for geodesic isotensoid.

4. Equivalent of second area for geodesic isotensoid.

For cases where $\alpha \longrightarrow \pi/2$ as the last point is approached, and since $\alpha \longrightarrow \pi/2$, Equation (12) $\longrightarrow 0$ and $k = r_2/a$. For this end condition, Equation (12) (substituting $u' = 1/Q$) becomes

$$\frac{r_2}{a} = k = \frac{-Z\left[1 + \left(\frac{1}{Q}\right)^2\right]^{1/2}}{\left(\frac{1}{Q}\right)} \tag{32c}$$

$$Q = \pm \left(\frac{k^2}{Z^2} - 1\right)^{1/2} \tag{48}$$

The negative of the square root should be used because Q is negative.

For the first area of concern, Z of the last point equals Z_L, and u of the last point equals u_L:

$$Z_L = u_L \tan \gamma + C \tag{49}$$

If Z_p and u_p are the coordinates of the next-to-last point, the infinite-difference form is

$$\frac{Z_L - Z_p}{u_L - u_p} = Q = \left[\frac{k^2}{\left(\frac{Z_L + Z_p}{2}\right)^2} - 1\right]^{1/2} \tag{50}$$

Equations (49) and (50) are solved to define Z_L and u_L.

53

For the condition of an in-plane pattern on a sphere, Z_L and u_L are obtained as indicated below. The circular arc is

$$Z^2 + (u - s)^2 = \left(\frac{r}{2}\right)^2 \tag{51}$$

where

$$r = r_1 = r_2$$

Thus, at the next-to-last point,

$$s = u_p - \sqrt{\left(\frac{r}{a}\right)^2 - (Z_p)^2} \tag{52}$$

The derivative of Equation (51) is

$$2Z\ dZ + 2\ (u - s)\ dy = 0 \tag{53}$$

Since

$$Q = \frac{dZ}{du}$$

$$Q = -\frac{u - s}{Z} \tag{54}$$

and

$$Q_L = \frac{s - u_L}{Z_L} \tag{54a}$$

where

$$Z_L = u_L \tan \gamma + C \tag{49}$$

For the third area of concern,

$$Z_L = D$$

Thus

$$\frac{D - Z_p}{u_L - u_p} = -\sqrt{\frac{k^2}{\left(\frac{D - Z_p}{2}\right)^2} - 1} \tag{55}$$

where

$$u_L \tan \gamma + C = D \tag{49a}$$

For the final area of concern,

$$Z_L = D$$

Thus

$$u_L \tan \gamma + C = D \tag{49a}$$

and

$$Q_L = \frac{s - u_L}{D}$$

where

$$s = u_p - \left[\left(\frac{r}{a}\right)^2 - (Z_p)^2\right]^{1/2} \tag{52}$$

The actual solution of the head contour and stresses in a filament-wound pressure vessel with a load-carrying liner is accomplished by the application of the previously derived equations in an order defined by the specific input to a computer.

C. CYLINDER DESIGN

In order for the cylindrical portion of the vessel to complement the head design, stress continuity must be maintained at the junction of the head and cylinder. At the design pressure, Equation (1) defines the equilibrium of forces in the meridional direction of the head at the equator and must also be valid for the longitudinal direction of the cylinder:

$$\sigma_{fd}\, t_e + \sigma_{bLT} t_L = \frac{p_d a}{2} \tag{1}$$

The load-carrying capability of the hoop composite must be incorporated into the force-equilibrium equation in the hoop direction:

$$\sigma_{fHd}\, t_H + \sigma_{bLHT} t_L + \sigma_{fd}\, t_e \tan^2 \alpha_o = p_d a \tag{56}$$

At the design pressure, the hoop filaments are assumed to be at the same stress level as the longitudinal filaments. With this assumption and the previously established liner and composite thicknesses, Equation (56) is used to determine the thickness of the hoop composite:

$$t_H = \frac{1}{\sigma_{fd}} \left(p_d a - \sigma_{fd}\, t_e \tan^2 \alpha_o - \sigma_{bLHT} t_L \right) \tag{57}$$

Equilibrium of forces must also be maintained in the cylinder at the wrapping condition. Continuity requires the same equilibrium of forces in the longitudinal direction of the cylinder as exists in the meridional direction of the head at the equator:

$$\sigma_{of}\, t_e + \sigma_{oL}\, t_L = \frac{p_w a}{2} \tag{7}$$

In the hoop direction of the cylinder, the force-equilibrium equation includes the hoop-filament contribution and can be expressed as

$$\sigma_{ofH}\, t_H + \sigma_{oLHC}\, t_L + \sigma_{of}\, t_e \tan^2 \alpha_o = p_w a \tag{58}$$

Liner hoop stress and filament hoop stress are both unknowns in this equation. Because stress continuity in the liner at the junction of the heads with the cylinder is desirable, the hoop stress in the cylindrical portion of the liner is assumed equal to the liner hoop stress at the equator of the head. Equation (58) may now be rewritten so that the hoop-wrap filament stress is expressed as

$$\sigma_{ofH} = \frac{1}{t_H} \left(p_w a - \sigma_{of}\, t_e \tan^2 \alpha_o - \sigma_{oLH}\, t_L \right) \tag{59}$$

D. STRUCTURAL ANALYSIS

For the structural analysis of filament-reinforced pressure vessels with load-carrying liners, compatibility is controlled in the meridional direction only in the head and in the hoop and longitudinal directions in the cylinder.

1. Equilibrium of Forces at p_N, T_{NL}, and T_{NF}

Meridional Direction

$$\sigma_{Nf_x}\, t_{e_x} + \sigma_{NL_x}\, t_L = \frac{p_N\, r_2}{2} \tag{60}$$

Hoop Direction

$$\sigma_{Nf_x} t_{e_x} \tan^2 \alpha + \sigma_{NLH_x} t_L + \sigma_{NfH} t_H = \frac{p_N r_2}{2} \left(2 - \frac{r_2}{r_1}\right) \quad (61)$$

2. <u>Compatibility of Strains from Condition "OLD" to Condition "N"</u>

Longitudinal or Meridional Direction

$$\frac{\sigma_{Nf_x}}{E_{Nf}} - \frac{\sigma_{OLDf_x}}{E_{OLDf}} + \alpha_f \Delta T_f = e_{tL_x} - \frac{1}{E_{OLDL}} \left(\sigma_{OLDL_H} - \nu_{oL} \sigma_{OLDH_x}\right)$$

$$+ \alpha_L \Delta T_L \quad (62)$$

Hoop Direction (Cylinder Only)

$$\frac{\sigma_{NfH_x}}{E_{Nf}} - \frac{\sigma_{OLDfH_x}}{E_{OLDf}} + \alpha_f \Delta T_f = e_{tLH_x}$$

$$- \frac{1}{E_{OLDL}} \left(\sigma_{OLDL_x} - \nu_{oL} \sigma_{OLDH_x}\right) \quad (63)$$

where e_{tL_x} and e_{tLH} are computed as follows:

<u>Condition 1</u>: $\sigma_{NL_x} < \sigma_{NyL_x}$ and $\sigma_{NLH_x} < \sigma_{NyLH_x}$

$$e_{tL_x} = \frac{1}{E_{NL}} \left(\sigma_{NL_x} - \nu_{NL} \sigma_{NLH_x}\right)$$

$$e_{tLH_x} = \frac{1}{E_{NL}} \left(\sigma_{NLH_x} - \nu_{NL} \sigma_{NL_x}\right)$$

<u>Condition 2</u>: $\sigma_{NL_x} < \sigma_{NyL_x}$ and $\sigma_{NLH_x} \geq \sigma_{NyLH_x}$

$$e_{tL_x} = \frac{\sigma_{NL_x}}{E_{NL}} - \frac{\sigma_{NLH_x}}{2E_{N1}} + \sigma_{NyLH_x} \left[\frac{1}{2E_{N1}} - \frac{\nu_{NL}}{E_{NL}}\right]$$

$$e_{tLH_x} = \frac{\sigma_{NLH_x}}{E_{N1}} - \frac{\nu_{NL} \sigma_{NL_x}}{E_{NL}} + \sigma_{NyLH_x} \left[\frac{1}{E_{N1}} - \frac{1}{E_{NL}}\right]$$

Condition 3: $\sigma_{NL_x} \geq \sigma_{NyL_x}$ and $\sigma_{NLH_x} \geq \sigma_{NyLH_x}$

$$e_{tL_x} = \frac{\sigma_{NL_x}}{E_{N1}} - \frac{\sigma_{NLH_x}}{2E_{N1}} + \sigma_{NyLH_x}\left[\frac{1}{2E_{N1}} - \frac{\nu_{NL}}{E_{NL}}\right]$$

$$- \sigma_{NyL_x}\left[\frac{1}{E_{N1}} - \frac{1}{E_{NL}}\right]$$

$$e_{tLH_x} = \frac{\sigma_{NLH_x}}{E_{N1}} - \frac{\sigma_{NL_x}}{2E_{N1}} + \sigma_{NyL_x}\left[\frac{1}{2E_{N1}} - \frac{\nu_{NL}}{E_{NL}}\right]$$

$$- \sigma_{NyLH_x}\left[\frac{1}{E_{N1}} - \frac{1}{E_{NL}}\right]$$

Condition 4: $\sigma_{NL_x} \geq \sigma_{NyL_x}$ and $\sigma_{NLH_x} < \sigma_{NyLH_x}$

$$e_{tL_x} = \frac{\sigma_{NL_x}}{E_{N1}} - \frac{\nu_{NL}\,\sigma_{NLH_x}}{E_{NL}} - \sigma_{NyL_x}\left[\frac{1}{E_{N1}} - \frac{1}{E_{NL}}\right]$$

$$e_{tLH_x} = \frac{\sigma_{NLH_x}}{E_{NL}} - \frac{\sigma_{NL_x}}{2E_{N1}} + \sigma_{NyL_x}\left[\frac{1}{2E_{N1}} - \frac{\nu_{NL}}{E_{NL}}\right]$$

3. Solution of Equations

Simultaneous solution of Equations (62) and (63), subject to each condition,* produces the required N filament stresses in terms of material and geometry constants. Generally, the equations can be written as follows:

$$\sigma_{Nf_x} = \frac{M_{32} + \frac{M_{36}}{M_{34}} M_{33}}{M_{31} - \frac{M_{36}}{M_{34}} M_{35}} \tag{64}$$

$$\sigma_{NfH_x} = \frac{M_{33} + M_{35}\,\sigma_{Nf_x}}{M_{34}} \tag{65}$$

*The constants (M_n) are evaluated differently, depending on the state of elasticity (i.e., which condition prevails).

Special considerations for heads and cylinders are as follows: For heads, $M_{33} = M_{35} = M_{36} = 0$, and $M_{34} = 1.0$, $t_H = 0$; and for cylinders, $r_2/r_1 = 0$.

All other constants depend upon whether the liner stresses exceed the yield or not:

<u>Condition 1</u>: $\sigma_{NL_x} < \sigma_{NyL_x}$ and $\sigma_{NLH_x} < \sigma_{NyLH_x}$

$$M_{31} = 1 + \frac{E_{Nf}}{E_{NL}} \left(\frac{t_{e_x}}{t_L}\right) - \frac{E_{Nf}}{E_{NL}} \nu_{NL} \left(\frac{t_{e_x}}{t_L}\right) \tan^2 \alpha$$

$$M_{32} = \frac{E_{Nf}}{E_{NL}} \left(\frac{p_N r_2}{2t_L}\right) \left[1 - \nu_{NL} \left(2 - \frac{r_2}{r_1}\right)\right.$$

$$- \frac{E_{Nf}}{E_{OLDL}} \left[\sigma_{OLDL_x} - \nu_{OL}\, \sigma_{OLDH_x}\right] + E_{Nf} \left[\alpha_L\, \Delta T_L - \alpha_f\, \Delta T_f\right]$$

$$+ \frac{E_{Nf}}{E_{OLDf}} \sigma_{OLDf_x}$$

For cylinder only,

$$M_{33} = \frac{E_{Nf}}{E_{NL}} \left(\frac{p_N\, r_2}{t_L}\right)\left(1 - \frac{\nu_{NL}}{2}\right) - \frac{E_{Nf}}{E_{OLDL}} \left[\sigma_{OLDH} - \nu_{oL}\, \sigma_{OLDL}\right]$$

$$+ E_{Nf} \left[\alpha_L\, \Delta T_L - \alpha_f\, \Delta T_f\right] + \frac{E_{Nf}}{E_{OLDf}} \sigma_{OLDfH}$$

$$M_{34} = 1 + \frac{E_{Nf}}{E_{NL}} \left(\frac{t_H}{t_L}\right)$$

$$M_{35} = \left(\frac{t_e}{t_L}\right) \frac{E_{Nf}}{E_{NL}} \left[\nu_{NL} - \tan^2 \alpha\right]$$

$$M_{36} = \nu_{NL} \left(\frac{t_H}{t_L}\right) \frac{E_{Nf}}{E_{NL}}$$

Condition 2: $\sigma_{NL_x} < \sigma_{NyL_x}$ and $\sigma_{NLH_x} \geq \sigma_{NyLH_x}$

$$M_{31} = 1 + \frac{E_{Nf}}{E_{NL}} \left(\frac{t_{e_x}}{t_L}\right) - \frac{E_{Nf}}{2E_{N1}} \left(\frac{t_{e_x}}{t_L}\right) \tan^2 \alpha$$

$$M_{32} = \frac{E_{Nf}}{E_{NL}} \left(\frac{p_N \; r_2}{2t_L}\right) - \frac{E_{Nf}}{2E_{N1}} \left(\frac{p_N \; r_2}{2t_L}\right)\left(2 - \frac{r_2}{r_1}\right)$$

$$- \frac{E_{Nf}}{E_{OLDL}} \left[\sigma_{OLDL_x} - \nu_{oL} \; \sigma_{OLDH_x}\right] + \sigma_{NyLH_x} \left[\frac{E_{Nf}}{2E_{N1}} - \frac{\nu_{NL} \; E_{Nf}}{E_{NL}}\right]$$

$$+ E_{Nf} \left[\alpha_L \; \Delta T_L - \alpha_f \; \Delta T_f\right] + \frac{E_{Nf}}{E_{OLDf}} \; \sigma_{OLDf_x}$$

For cylinder only,

$$M_{33} = \frac{E_{Nf}}{E_{N1}} \left(\frac{p_N \; r_2}{t_L}\right) - \frac{\nu_{NL} \; E_{Nf}}{E_{NL}} \left(\frac{p_N \; r_2}{2t_L}\right)$$

$$- \sigma_{NyLH} \left[\frac{E_{Nf}}{E_{N1}} - \frac{E_{Nf}}{E_{NL}}\right] - \frac{E_{Nf}}{E_{OLDL}} \left[\sigma_{OLDH} - \nu_{oL} \; \sigma_{OLDL}\right] + E_{Nf} \left[\alpha_L \; \Delta T_L - \alpha_f \; \Delta T_f\right]$$

$$+ \frac{E_{Nf}}{E_{OLDf}} \; \sigma_{OLDfH}$$

$$M_{34} = 1 + \frac{E_{Nf}}{E_{N1}} \left(\frac{t_H}{t_L}\right)$$

$$M_{35} = \left(\frac{t_e}{t_L}\right) \left[\frac{\nu_{NL} \; E_{Nf}}{E_{NL}} - \frac{E_{Nf} \; \tan^2 \alpha}{E_{N1}}\right]$$

$$M_{36} = \frac{E_{Nf}}{2E_{N1}} \left(\frac{t_H}{t_L}\right)$$

Condition 3: $\sigma_{NL_x} \geq \sigma_{NyL_x}$ and $\sigma_{NLH_x} \geq \sigma_{NyLH_x}$

$$M_{31} = 1 + \frac{E_{Nf}}{E_{N1}} \left(\frac{t_{e_x}}{t_L}\right) - \frac{E_{Nf}}{2E_{N1}} \left(\frac{t_{e_x}}{t_L}\right) \tan^2 \alpha$$

$$M_{32} = \frac{E_{Nf}}{E_{N1}} \left(\frac{p_N \; r_2}{2t_L}\right)\left(\frac{r_2}{r_1}\right) + \sigma_{NyLH_x} \left[\frac{E_{Nf}}{2E_{N1}} - \frac{E_{Nf}}{E_{NL}} \; \nu_{NL}\right] + \sigma_{NyL_x}$$

$$\left[\frac{E_{Nf}}{E_{NL}} - \frac{E_{Nf}}{E_{N1}}\right] + E_{Nf} \left[\alpha_L \; \Delta T_L - \alpha_f \; \Delta T_f\right] - \frac{E_{Nf}}{E_{OLDL}} \left[\sigma_{OLDL_x} - \nu_{oL} \; \sigma_{OLDH_x}\right]$$

$$+ \frac{E_{Nf}}{E_{OLDf}} \; \sigma_{OLDf_x}$$

For cylinder only,

$$M_{33} = \frac{3E_{Nf}}{4E_{N1}} \left(\frac{p_N \; r_2}{t_L}\right) - \sigma_{NyLH} \left[\frac{E_{Nf}}{E_{N1}} - \frac{E_{Nf}}{E_{NL}}\right]$$

$$+ \sigma_{NyL}\left[\frac{E_{Nf}}{2E_{N1}} - \frac{\nu_{NL} \; E_{NF}}{E_{NL}}\right] - \frac{E_{Nf}}{E_{OLDL}}\left[\sigma_{OLDH} - \nu_{oL} \; \sigma_{OLDL}\right] + E_{Nf}$$

$$\left[\alpha_L \; \Delta T_L - \alpha_f \; \Delta T_f\right] + \frac{E_{Nf}}{E_{OLDf}} \; \sigma_{OLDfH}$$

$$M_{34} = 1 + \frac{E_{Nf}}{E_{N1}} \left(\frac{t_H}{t_L}\right)$$

$$M_{35} = \left(\frac{t_e}{t_L}\right) \frac{E_{Nf}}{E_{N1}} \left[\frac{1}{2} - \tan^2 \alpha\right]$$

$$M_{36} = \frac{E_{Nf}}{2E_{N1}} \left(\frac{t_H}{t_L}\right)$$

<u>Condition 4</u>: $\sigma_{NL_x} \geq \sigma_{NyL_x}$ and $\sigma_{NLH_x} < \sigma_{NyLH_x}$

$$M_{31} = 1 + \frac{E_{Nf}}{E_{N1}} \left(\frac{t_{e_x}}{t_L}\right) - \frac{\nu_{NL} \; E_{Nf}}{E_{NL}} \left(\frac{t_{e_x}}{t_L}\right) \tan^2 \alpha$$

$$M_{32} = \frac{E_{Nf}}{E_{N1}} \left(\frac{p_N \; r_2}{2t_L}\right) - \frac{E_{Nf} \; \nu_{NL}}{E_{NL}} \left(\frac{p_N \; r_2}{2t_L}\right)\left(2 - \frac{r_2}{r_1}\right)$$

$$+ \sigma_{NyL_x} \left[\frac{E_{Nf}}{E_{NL}} - \frac{E_{Nf}}{E_{N1}}\right] - \frac{E_{Nf}}{E_{OLDL}} \left[\sigma_{OLDL_x} - \nu_{oL} \; \sigma_{OLDH_x}\right]$$

$$+ E_{Nf} \left[\alpha_L \Delta T_L - \alpha_f \; \Delta T_f\right] + \frac{E_{Nf}}{E_{OLDf}} \; \sigma_{OLDf_x}$$

For cylinder only,

$$M_{33} = \frac{E_{Nf}}{E_{NL}} \left(\frac{p_N \; r_2}{2t_L}\right)\left(2 - \frac{r_2}{r_1}\right) - \frac{E_{Nf}}{2E_{N1}} \left(\frac{p_N \; r_2}{2t_L}\right) + \sigma_{NyL} \left[\frac{E_{Nf}}{2E_{N1}} - \frac{E_{Nf} \; \nu_{NL}}{E_{NL}}\right]$$

$$- \frac{E_{Nf}}{E_{OLDL}} \left[\sigma_{OLDH} - \nu_{oL} \; \sigma_{OLDL}\right] + E_{Nf} \left[\alpha_L \; \Delta T_L - \alpha_f \; \Delta T_f\right]$$

$$+ \frac{E_{Nf}}{E_{OLDf}} \; \sigma_{OLDfH}$$

$$M_{34} = 1 + \frac{E_{Nf}}{E_{NL}} \left(\frac{t_H}{t_L}\right)$$

$$M_{35} = \left(\frac{t_e}{t_L}\right) \left[\frac{E_{Nf}}{2E_{N1}} - \frac{E_{Nf} \; \tan^2 \alpha}{E_{NL}}\right]$$

$$M_{36} = \frac{E_{Nf} \; \nu_{NL}}{E_{NL}} \left(\frac{t_H}{t_L}\right)$$

Once the filament stresses are known, the liner stresses can be determined from Equations (60) and (61):

$$\sigma_{NL_x} = \frac{p_N \; r_2}{2t_L} - \frac{t_{e_x} \; \sigma_{Nf_x}}{t_L} \qquad (60a)$$

$$\sigma_{NLH_x} = \frac{p_N r_2}{2t_L}\left(2 - \frac{r_2}{r_1}\right) - \frac{t_{e_x}\,\sigma_{Nf_x}\,\tan^2\alpha}{t_L} + \frac{t_H\,\sigma_{NfH_x}}{t_L} \qquad (61a)$$

4. Strains

The total biaxial strain of the metal shell in either direction has three components: elastic, plastic, and thermal strains. The elastic and plastic portions are further complicated by the influence of Poisson's effect. When these considerations are combined, four stress-field-dependent conditions may exist for the calculation of total strain. A generalization of the method presented in Section II,A,1 will be used to provide equations for the calculation of metal-shell biaxial strains for any stress field. All metal-shell strains are referred to the initial zero-strain condition as shown in the simplified sketch below.

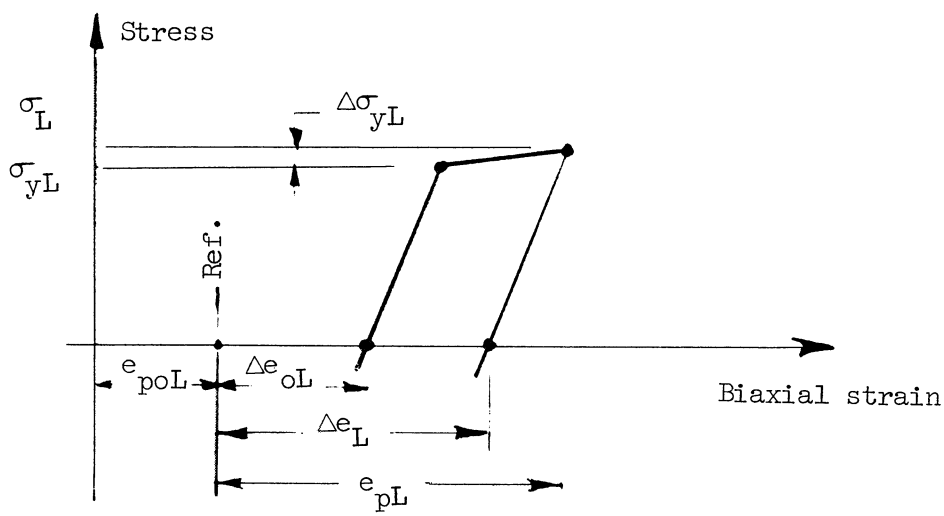

Condition 1: $\sigma_L < \sigma_{yL}$ and $\sigma_{LH} < \sigma_{yLH}$

The total biaxial strains in the meridional and hoop directions are

$$e_{pL} = \frac{\sigma_L}{E_L} - \nu_L \frac{\sigma_{LH}}{E_L} + \alpha_L \Delta T_L - e_{poL} + \Delta e_{oL} \qquad (66)$$

$$e_{pLH} = \frac{\sigma_{LH}}{E_L} - \nu_L \frac{\sigma_L}{E_L} + \alpha_L \Delta T_L - e_{poLH} + \Delta e_{oLH} \qquad (67)$$

The changes in yield stresses are

$$\Delta\sigma_{yL} = 0.0 \tag{68}$$

$$\Delta\sigma_{yLH} = 0.0 \tag{69}$$

The plastic sets are

$$\Delta e_L = \Delta e_{oL} \tag{70}$$

$$\Delta e_{LH} = \Delta e_{oLH} \tag{71}$$

<u>Condition 2:</u> $\sigma_{LH} > \sigma_{yLH}$ and $\sigma_L \leq \sigma_{yL}$

The total biaxial strains in the meridional and hoop directions are

$$e_{pL} = \frac{\sigma_L}{E_L} - \left(\frac{1}{2}\right)\frac{\sigma_{LH}}{E_I} + \sigma_{yLH}\left(\frac{1}{2E_I} - \frac{\nu_L}{E_L}\right) + \alpha_L \Delta T_L - e_{poL} + \Delta e_{oL} \tag{66a}$$

$$e_{pLH} = \frac{\sigma_{LH}}{E_I} - \frac{\nu_L}{E_L}\sigma_L + \sigma_{yLH}\left(\frac{1}{E_L} - \frac{1}{E_I}\right) + \alpha_L \Delta T_L - e_{poLH} + \Delta e_{oLH} \tag{67a}$$

The changes in yield stresses are

$$\Delta\sigma_{yL} = 0.0 \tag{68a}$$

$$\Delta\sigma_{yLH} = \sigma_{LH} - \sigma_{yLH} \tag{69a}$$

The plastic sets are

$$\Delta e_L = \left(\frac{\nu_L}{E_L} - \frac{1}{2E_I}\right)\Delta\sigma_{yLH} + \Delta e_{oL} \tag{70a}$$

$$\Delta e_{LH} = \left(\frac{1}{E_I} - \frac{1}{E_L}\right)\Delta\sigma_{yLH} + \Delta e_{oL} \tag{71a}$$

<u>Condition 3:</u> $\sigma_L > \sigma_{yL}$ and $\sigma_{LH} > \sigma_{yLH}$

The total biaxial strains in the meridional and hoop directions are

$$e_{pL} = \frac{\sigma_L}{E_I} - \frac{\sigma_{LH}}{2E_I} + \sigma_{yL}\left(\frac{1}{E_L} - \frac{1}{E_I}\right) - \sigma_{yLH}\left(\frac{\nu_L}{E_L} - \frac{1}{2E_I}\right) + \alpha_L \Delta T_L - e_{poL} + \Delta e_{oL} \tag{66b}$$

$$e_{pLH} = \frac{\sigma_{LH}}{E_I} - \frac{\sigma_L}{2E_I} + \sigma_{yLH}\left(\frac{1}{E_L} - \frac{1}{E_I}\right) - \sigma_{yL}\left(\frac{\nu_L}{E_L} - \frac{1}{2E_I}\right) + \alpha_L \Delta T_L - e_{poLH} + \Delta e_{oLH} \tag{67b}$$

The changes in yield stresses are

$$\Delta\sigma_{yL} = \sigma_L - \sigma_{yL} \tag{68b}$$

$$\Delta\sigma_{yLH} = \sigma_{LH} - \sigma_{yLH} \tag{69b}$$

The plastic sets are

$$\Delta e_L = \Delta\sigma_{yL}\left(\frac{1}{E_I} - \frac{1}{E_L}\right) + \Delta\sigma_{yLH}\left(\frac{\nu_L}{E_L} - \frac{1}{2E_I}\right) + \Delta e_{oL} \tag{70b}$$

$$\Delta e_{LH} = \Delta\sigma_{yLH}\left(\frac{1}{E_I} - \frac{1}{E_L}\right) + \Delta\sigma_{yL}\left(\frac{\nu_L}{E_L} - \frac{1}{2E_I}\right) + \Delta e_{oLH} \tag{71b}$$

<u>Condition 4</u>: $\sigma_L > \sigma_{yL}$ and $\sigma_{LH} \leq \sigma_{yLH}$

The total biaxial strains in the meridional and hoop directions are

$$e_{pL} = \frac{\sigma_L}{E_I} - \frac{\nu_L}{E_L}\sigma_{LH} + \sigma_{yL}\left(\frac{1}{E_L} - \frac{1}{E_I}\right) + \alpha_L \Delta T_L - e_{poL} + \Delta e_{oL} \tag{66c}$$

$$e_{pLH} = \frac{\sigma_{LH}}{E_L} - \left(\frac{1}{2}\right)\frac{\sigma_L}{E_I} + \sigma_{yL}\left(\frac{1}{2E_I} - \frac{\nu_L}{E_L}\right) + \alpha_L \Delta T_L - e_{poLH} + \Delta e_{oLH} \tag{67c}$$

The changes in yield stresses are

$$\Delta\sigma_{yL} = \sigma_L - \sigma_{yL} \tag{68c}$$

$$\Delta\sigma_{yLH} = 0.0 \tag{69c}$$

The plastic sets are

$$\Delta e_L = \left(\frac{1}{E_I} - \frac{1}{E_L}\right)\Delta\sigma_{yL} + \Delta e_{oL} \tag{70c}$$

$$\Delta e_{LH} = \left(\frac{\nu_L}{E_L} - \frac{1}{2E_I}\right)\Delta\sigma_{yL} + \Delta e_{oLH} \tag{71c}$$

E. VESSEL CHARACTERISTICS

1. Arc Length

The length of the filament path over each head is

$$S_H = \sum^{n} \Delta S_H \tag{72}$$

where

$$\Delta S_H = \frac{\Delta y}{\sin \phi_n \cos \alpha_n} \qquad \text{for } \phi > 45^\circ$$

$$\Delta S_H = \frac{x_{n-1} \Delta\theta}{\sin \alpha_n} \qquad \text{for } \phi \leq 45^\circ$$

For one pass along the cylinder,

$$S_c = \frac{(CYL)}{\cos \alpha_o} \tag{73}$$

The total arc length for the vessel is

$$S_T = S_c + S_{H_1} + S_{H_2} \tag{74}$$

2. Surface Area

The middle surface of the longitudinal composite is used to represent the head surface area. The total surface area for each head, including the port area, is

$$A_H = \pi x_o^2 + 2\pi \sum^{n} \bar{x}_n \sqrt{\Delta x^2 + \Delta y^2} \tag{75}$$

The surface area of the cylinder, referenced to the midplane of the longitudinal composite, is

$$A_c = 2\pi a \, (CYL) \tag{76}$$

and the total surface area of the vessel is

$$A_T = A_c + A_{H_1} + A_{H_2} \tag{77}$$

3. Weight

The total weight of the vessel is found by summation of the volume-density products of the materials of construction. The weight of hardware has been neglected so that total weight is given by

$$W_T = \rho_L V_L + \rho_g V_c \tag{78}$$

For each head, the filament-composite volume is

$$V_C = 2\pi a t_o \cos \alpha_o S_H \tag{79}$$

where S_H was found from previous calculations. The volume of liner for each head is approximately equal to the product of surface area and thickness. The surface area, however, is calculated at the middle surface of the longitudinal wrap. A second-order approximation would correct this area by the factor

$$\left[\frac{a - \left(\frac{t_o + t_L}{2}\right)}{a} \right]^2$$

Because the wrap thickness varies and is always $\geq t_o$, this factor will still overestimate the volume of the liner. An "exact" (numerical) calculation produces difficulties near the port, where the filament-composite thickness becomes extremely large. The following approximation is therefore used:

$$V_{LH} = t_L \left(A_H - \pi x_o^2\right) \left[\frac{a - \left(\frac{t_o}{2} + t_L\right)}{a} \right]^2 \tag{80}$$

The cylinder-liner volume is calculated as follows:

$$V_{LC} = 2\pi(CYL)t_L \left(a - \frac{t_o + t_L}{2}\right) \tag{81}$$

and similarly, the filament-composite volume, which includes the hoop and longitudinal wraps, is

$$V_{CC} = 2\pi(CYL)\ (t_o + t_{HC})\ (a + \frac{t_{HC}}{2}) \tag{82}$$

Thus, the total weight of the vessel is

$$W_T = \rho_L\ (V_{LH_1} + V_{LH_2} + V_{LC}) + \rho_g\ (V_{C_1} + V_{C_2} + V_{CC}) \tag{78a}$$

4. Internal Volume

The internal volume of each head referenced to the middle surface is

$$V_{oL} = \pi\ x_o^{\ 2}\ y_o + \sum^{n} 2\pi\ \bar{x}\ \bar{y}\ \Delta x \tag{83}$$

This volume is corrected by subtracting half the filament-composite volume and the liner volume to give the volume available for fluid storage:

$$V_H = V_{oL} - (\frac{1}{2}\ V_C + V_{LH}) \tag{84}$$

The contained volume of the cylinder is

$$V_{CYL} = \pi(CYL)(a - \frac{t_o}{2} - t_L)^2 \tag{85}$$

and the total available volume is

$$V_T = V_{H_1} + V_{H_2} + V_{CYL} \tag{86}$$

5. Performance Factor

The efficiency of the complete pressure vessel is represented by the performance factor

$$\frac{p_d\ V_T}{W_T} \tag{87}$$

where p_d is the pressure at which the vessel was designed.

III. CONCLUSIONS

A. LIMITATIONS OF ANALYSIS

The analysis presented in this appendix can be applied to any filament-reinforced, lined pressure vessel with the following restrictions:

1. The only applied load is a constant internal pressure.

2. The liner has a constant, finite thickness.

3. The stress-strain curve of the filaments can be described by a straight line.

4. The stress-strain curve of the liner can be described by one or two straight lines with slopes representing primary and secondary moduli.

5. The winding pattern is on either a geodesic path or a planar path.

6. The tensile modulus of the resin must be small in comparison with the filament tensile modulus.

7. The maximum strains in the vessel are small; it is suggested that they be less than 5%.

8. The wrap angle must be greater than zero; this requires that the bosses have finite diameters.

9. No temperature gradient exists in either the composite or liner.

10. Changes in temperature and pressure must be analyzed separately if the liner is not in the elastic range.

The analysis assumes that the liner and composite react to membrane loads only. Discontinuities in the vicinity of bosses are not considered. This assumption is consistent with previous composite-pressure-vessel data indicating that the composite in the vicinity of the small bosses (less than 20% of the case diameter) has a higher margin of safety than other areas of the head.

B. FUTURE EXTENSIONS OF ANALYSIS

Advanced design analyses of filament-reinforced pressure vessels with load-carrying liners can be based on the approach presented, with the following possible variations:

1. The liner thickness varies in some set pattern (e.g., thickness is a function of radial position or of the wrap angle at a point).

2. The stress-strain curve of the liner is expressed as an equation rather than two straight lines.

3. Attachment and acceleration loads can be included as well as pressure.

SYMBOLS

	Definition	Units
A_c	Surface area of cylindrical section	$in.^2$
A_H	Surface area of head	$in.^2$
A_T	Total surface area of vessel	$in.^2$
a	Radius of vessel at equator	in.
C	Distance from vessel axis to intersection of wrap plane with equator divided by radius a	-
CYL	Length of cylindrical section	in.
D	Boss radius divided by radius a	-
E_f	Elastic modulus of filaments at room temperature	$lb/in.^2$
E_{fT}	Elastic modulus of filaments at design temperature	$lb/in.^2$
E_I	Plastic modulus of liner at room temperature	$lb/in.^2$
E_{IT}	Plastic modulus of liner at design temperature	$lb/in.^2$
E_L	Elastic modulus of liner at room temperature	$lb/in.^2$
E_{LT}	Elastic modulus of liner at design temperature	$lb/in.^2$
E_{Nf}	Elastic modulus of filaments at condition "N"	$lb/in.^2$
E_{NL}	Elastic modulus of liner at condition "N"	$lb/in.^2$
E_{OLDf}	Elastic modulus of filaments at condition "OLD"	$lb/in.^2$
E_{OLDL}	Elastic modulus of liner at condition "OLD"	$lb/in.^2$
e_{bL}	Design strain of liner (uniaxial) in longitudinal direction	in./in.
e_{bLH}	Design strain of liner (uniaxial) in hoop direction	in./in.
e_E	Elastic strain	in./in.
e_p	Plastic strain	in./in.
e_{pL}	Liner biaxial strain in longitudinal direction	in./in.
e_{pLH}	Liner biaxial strain in hoop direction	in./in.
e_{poL}	Zero strain base for liner, relative to filaments, in longitudinal direction	in./in.
e_{poLH}	Zero strain base for liner, relative to filaments, in hoop direction	in./in.
e_{tL}	Total positive liner strain including Poisson's effect in meridional direction	in./in.
e_{tLH}	Total positive liner strain including Poisson's effect in hoop direction	in./in.

SYMBOLS (cont.)

	Definition	Units
K	Filament fraction in composite	-
k	Defined by Equation (32a)	-
k_1	Fraction of load taken by liner	-
N_θ	Circumferential force per unit of width	lb/in.
$N_{\theta f}$	Circumferential force per unit of width in filaments	lb/in.
$N_{\theta L}$	Circumferential force per unit of width in liner	lb/in.
N_ϕ	Meridional force per unit of width	lb/in.
$N_{\phi f}$	Meridional force per unit of width in filaments	lb/in.
$N_{\phi L}$	Meridional force per unit of width in liner	lb/in.
n	As subscript, evaluated at nth point	-
p	Pressure	lb/in.^{2}
p_d	Design pressure	lb/in.^{2}
p_N	Condition "N" pressure	lb/in.^{2}
p_w	Winding pressure	lb/in.^{2}
Q	Inverse derivative of u with respect to Z	-
Q_L	Inverse derivative of u with respect to Z at $x = x_o$	-
r	Radius	in.
r_1	Meridional radius of curvature	in.
$r_{1,o}$	Meriodional radius of curvature at equator	in.
r_2	Circumferential radius of curvature	in.
S_c	Filament arc length over cylindrical section	in.
S_H	Filament arc length over head	in.
S_T	Total filament arc length	in.
s	Normalized distance to center of spherical close-off dome	-
T_d	Design temperature	^oF
T_{df}	Design temperature of filaments	^oF
T_{dL}	Design temperature of liner	^oF
T_R	Room temperature, RT	^oF
t_e	Equivalent filament thickness in meridional direction	in.
t_H	Equivalent hoop-filament thickness	in.

SYMBOLS (cont.)

	Definition	Units
t_{HC}	Hoop-composite thickness	in.
t_L	Liner thickness	in.
t_o	Composite thickness at equator	in.
u	Axial coordinate, y/a	-
u_L	Axial coordinate at $x = x_o$	-
u_p	Axial coordinate of next-to-last point on head contour	-
u'	First derivative of u with respect to Z	-
u''	Second derivative of u with respect to Z	-
V_C	Volume of filament-composite material in head	$in.^3$
V_{CC}	Total volume of filament-composite material in cylindrical section	$in.^3$
V_{CYL}	Contained volume of cylindrical section	$in.^3$
V_H	Contained volume of head	$in.^3$
V_L	Total volume of liner material	$in.^3$
V_{LC}	Volume of liner material in cylindrical section	$in.^3$
V_{LH}	Volume of liner material in head	$in.^3$
V_{oL}	Internal volume of head referred to middle surface	$in.^3$
V_T	Total contained volume of vessel	$in.^3$
W_T	Total vessel weight	lb
x	Radial coordinate (used as subscript, indicates evaluated at point x)	in.
x_o	Boss radius	in.
$\bar{x}$	Average radial distance	in.
y	Axial coordinate	in.
y_o	Axial coordinate at $x = x_o$	in.
$\bar{y}$	Average axial distance	in.
Z	Radial coordinate, x/a	-
Z_L	Radial coordinate at $x = x_o$	-
Z_p	Radial coordinate of next-to-last point on head contour	-
1	As subscript, refers to Head No. 1	-
2	As subscript, refers to Head No. 2	-

SYMBOLS (cont.)

	Definition	Units
α	Angle between meridian and filament	degrees
α_f	Coefficient of thermal expansion, composite	in./in.-^{o}F
α_L	Coefficient of thermal expansion, liner	in./in.-^{o}F
α_o	Angle between meridian and filament at equator of head	degrees
γ	Angle between wrap plane and axis of vessel	degrees
Δ	Finite change	-
Δe_L	Increment of liner plastic set in longitudinal direction	in./in.
Δe_{LH}	Increment of liner plastic set in hoop direction	in./in.
Δe_{oL}	Change in liner zero strain base in longitudinal direction	in./in.
Δe_{oLH}	Change in liner zero strain base in hoop direction	in./in.
θ	Polar angle	degrees
ν_L	Poisson's ratio of liner at room temperature	-
ν_{LT}	Poisson's ratio of liner at given temperature	-
ν_{NL}	Poisson's ratio of liner at condition "N"	-
ν_{oL}	Poisson's ratio of liner at condition "OLD"	-
ρ_g	Density of filament composite	lb/in.^{3}
ρ_L	Density of liner	lb/in.^{3}
σ_{bLHT}	Design stress in liner (hoop)	lb/in.^{2}
σ_{bLT}	Design stress in liner (meridian)	lb/in.^{2}
σ_{fd}	Design stress in longitudinal filament	lb/in.^{2}
σ_{fHd}	Design stress in hoop filament	lb/in.^{2}
σ_L	Longitudinal stress in liner	lb/in.^{2}
σ_{LH}	Hoop stress in liner	lb/in.^{2}
σ_{Nf}	Longitudinal-filament stress at condition "N"	lb/in.^{2}
σ_{NfH}	Hoop-filament stress at condition "N"	lb/in.^{2}
σ_{NL}	Liner stress in longitudinal direction at condition "N"	lb/in.^{2}
σ_{NLH}	Liner stress in hoop direction at condition "N"	lb/in.^{2}
σ_{NyL}	Liner yield stress in longitudinal direction at condition "N"	lb/in.^{2}
σ_{NyLH}	Liner yield stress in hoop direction at Condition "N"	lb/in.^{2}

SYMBOLS (cont.)

	Definition	Units
σ_{of}	Longitudinal-filament stress due to winding pressure at room temperature	$lb/in.^2$
σ_{ofH}	Hoop-filament stress due to winding pressure at room temperature	$lb/in.^2$
σ_{ofT}	Filament stress at zero pressure and design temperature	$lb/in.^2$
σ_{oL}	Liner stress due to winding pressure at room temperature (meridian)	$lb/in.^2$
σ_{OLDf}	Longitudinal-filament stress at condition "OLD"	$lb/in.^2$
σ_{OLDfH}	Hoop-filament stress at condition "OLD"	$lb/in.^2$
σ_{OLDH}	Liner stress in hoop direction at condition "OLD"	$lb/in.^2$
σ_{OLDL}	Liner stress in longitudinal direction at condition "OLD"	$lb/in.^2$
σ_{oLH}	Liner stress due to winding pressure at room temperature (hoop)	$lb/in.^2$
σ_{oLHC}	Liner hoop stress in cylinder due to winding pressure at room temperature	$lb/in.^2$
σ_{oLHT}	Liner stress at zero pressure and design temperature (hoop)	$lb/in.^2$
σ_{oLT}	Liner stress at zero pressure and design temperature (meridian)	$lb/in.^2$
σ_{yL}	General liner yield stress in longitudinal direction	$lb/in.^2$
σ_{yLH}	General liner yield stress in hoop direction	$lb/in.^2$
σ_{yLT}	Yield stress of liner in tension at design temperature	$lb/in.^2$
σ'_{of}	Filament stress at zero pressure and room temperature	$lb/in.^2$
σ'_{oL}	Liner stress at zero pressure and room temperature (meridian)	$lb/in.^2$
σo_{oLH}	Liner stress at zero pressure and room temperature (hoop)	$lb/in.^2$
ϕ	Angle between normal to surface and axis of vessel	degrees

TABLE D-1

UNKNOWNS AT EQUATOR OF HEAD

Winding pressure, p_w	Liner thickness, t_L	Wrap angle, α_o
Design pressure, p_d	Composite thickness, t_o (t_e)	Radius in meridional direction, $r_{1.0}$
		Radius of vessel, a

	Stress Unknowns			
	At Design Pressure	At Zero Pressure and Temperature	At Zero Pressure and Room Temperature	At Winding Pressure
Fiber	σ_{fd}	σ_{ofT}	σ'_{of}	σ_{of}
Liner, meridian	σ_{bL} (e_{bL})	σ_{oLT}	σ'_{oL}	σ_{oL}
Liner, hoop	$\sigma_{bLH}(e_{bLH})$	σ_{oLHT}	σ'_{oLH}	σ_{oLH}

D-46

76

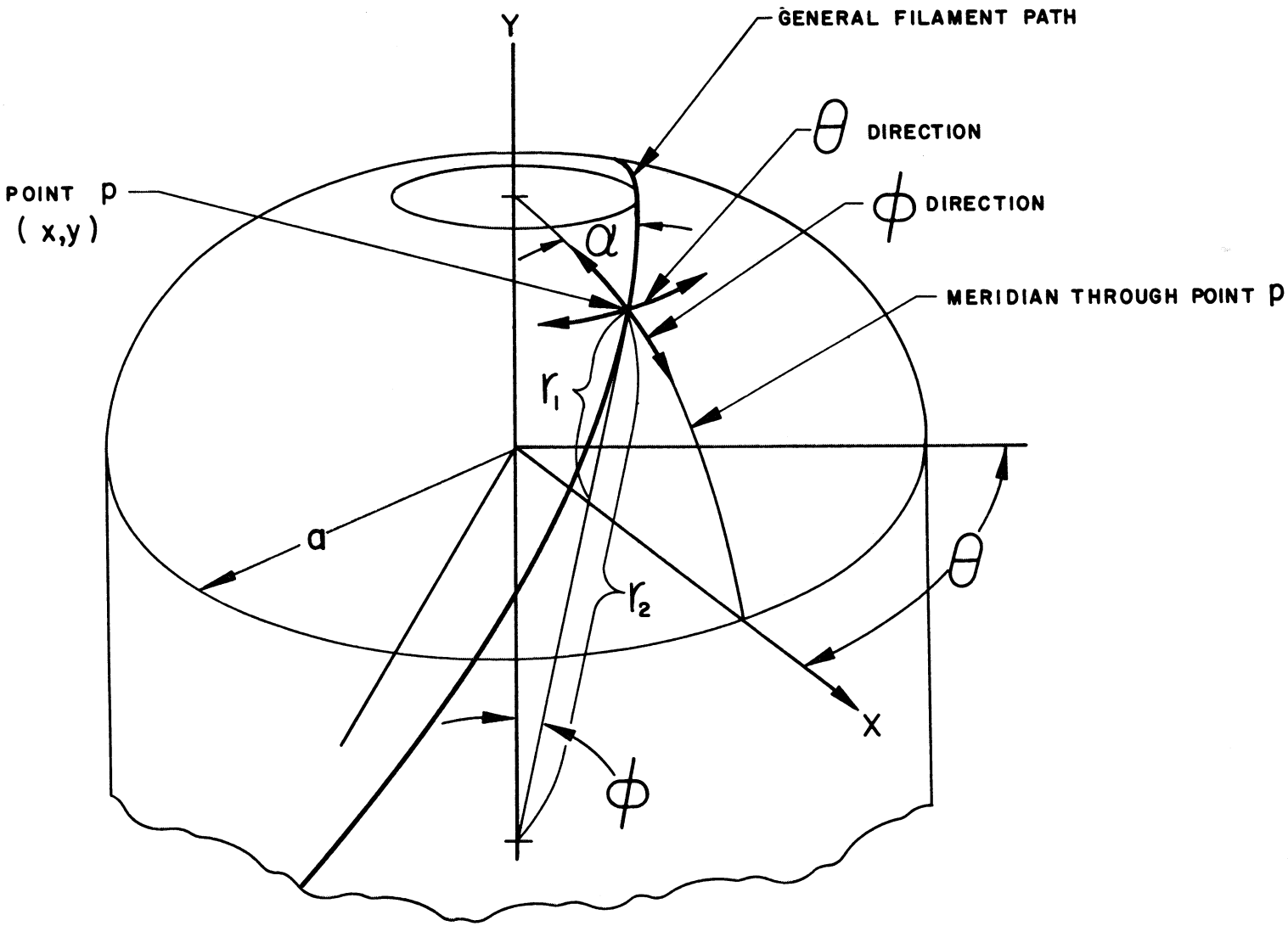

GEOMETRY OF GENERAL WINDING PATTERN

Figure D-1

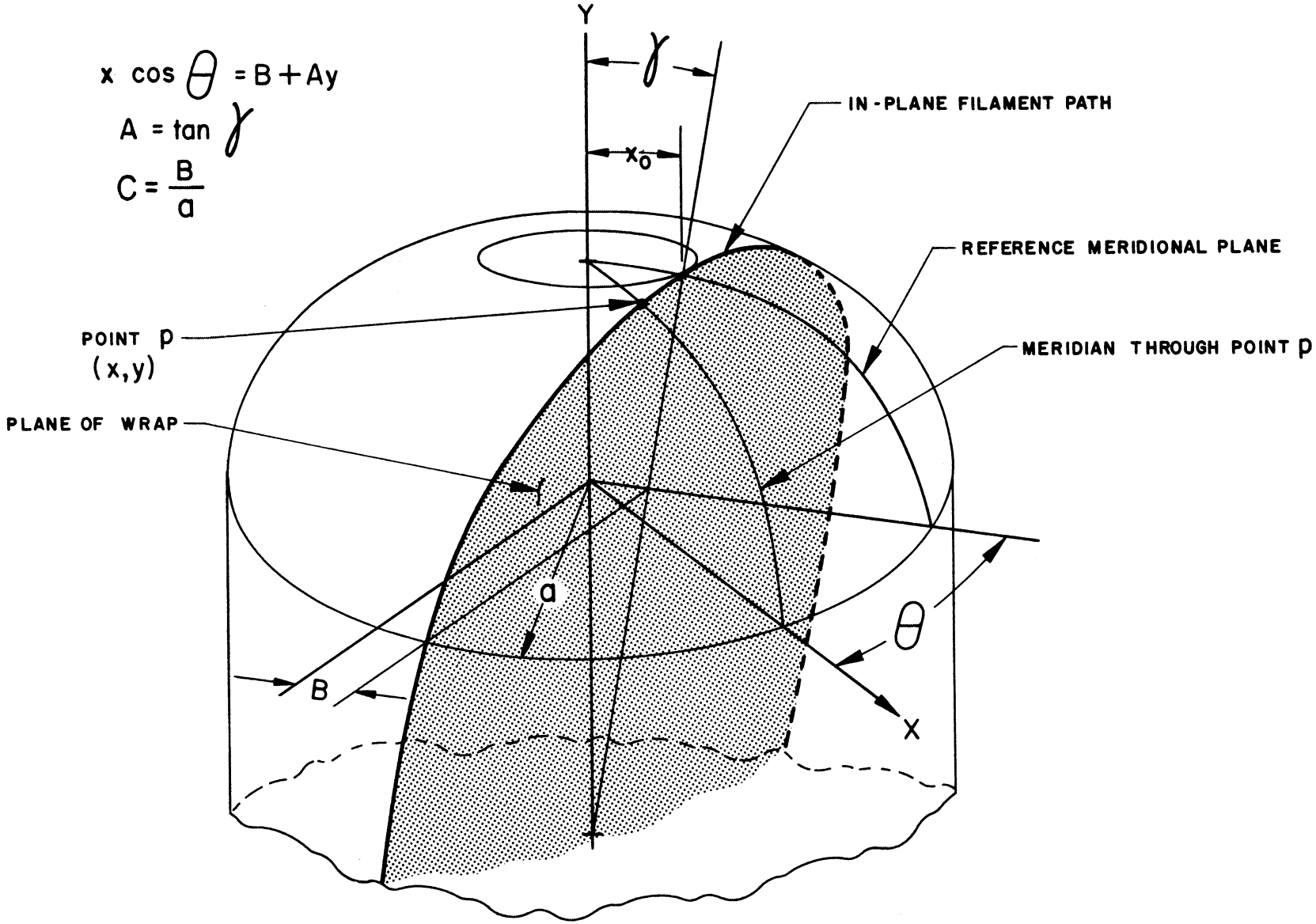

Figure D-2

GEOMETRY OF IN-PLANE WINDING PATTERN

APPENDIX B

PROGRAM LISTING

B-1-a

1

```
C206          FILAMENT REINFORCED METAL-SHELL PRESSURE VESSEL
C
      DIMENSION     THDNG(12)            ,HEADER(2,4)                      00000030
      DIMENSION PNN(3)                                                     00000040
      DIMENSION TITLE3(6),TITLE4(6),TITLE5(6),TITLE6(10),TITLE7(14)        00000050
      DIMENSION VOL(2),ARC(2),AREA(2)                                      00000060
      DIMENSION XS1(2),XS2(2),CSAV(2)                                      00000070
      DIMENSION TI(2),PRIOR(7)                                             00000080
      DIMENSION ICNT(6)                                                    00000090
      DIMENSION WHF(2),WL(2),WH(2)                                         00000100
      DIMENSION  IFV(3)                                                    ZU000110
      DIMENSION TITLE(16),VB1(200,16),VB2(200,16),VC(8,20),TITLE2(20)      00000120
C                                                                          00000130
      INTEGER PAGE                                                         00000140
      REAL KAY                                                             00000150
C                                                                          00000160
      COMMON ABIG,C,XO,A,PD,BIK,TO,TL,SOF,SOL,SFD,SYL,FF,EL,F1,VL,
     XRHOG,RHOL,ISO,KAY,ALFO,PW,SOLR,SOFR,EOL,P,EBL,ETL,SBL,VLEN,TE
     X,TDL,TDF,TR,DELDT,DE1DT,DEFDT,DSYLDT,DNULDT,DSYCDT,ALFL,ALFF,SYLC
     X,TMIN,SOLT,SOFT,SYLT,SYLCT,E1T,ELT,EFT,VLT,C1,C2,C3,XO1,EBLH,SOLH
      COMMON /ERRTN/ IEXIT                                                 00000210
      COMMON /DELTAS/ DELTL,DELTF,TEMT,NCOND,CYLN                          00000220
      COMMON /NEW/ DTL,DTF,TMT                                             00000230
      COMMON /FLAG1/ ISOLH,IEBLH,ISFD, ITL,ITO,IPD,IEBL,MANDRE             00000250
      COMMON /PRINT/ VC                                                    00000260
      COMMON /PRNT / AZ(10), AZZ(2,14)                                     00000270
      COMMON/NV/ PAGE,THDNG                                                00000280
      COMMON/RUNGE/TI,PRIOR,QT,Q,Z,U,PHI,ALPHA,THETA,RONE,RTWO,TALF,       00000290
     X NSTOP,NIBP,NIBPC,CONA,N,D,DELT,FF,NPREV,JUMP,NI,CTR                 00000300
                                                                          00000310
C
      DATA (TITLE(I),I=1,16)/1HQ,1HZ,1HU,3HPHI,5HALPHA,5HTHETA,5HR ONE,    00000320
     X 5HR TWO,1HT,3HSOL,4HSOLH,3HSOF, 3HEOL,4HEOLH,3HEOF,                 00000330
     X 6HSIGYLT/                                                           00000340
      DATA (TITLE2(I),I=1,19)/1HX,1HY,3HXFO,3HYFO,3HXFI,3HYFI,2HXM,2HYM,00000350
     16HSOLX  ,5HSOLHX,5HSOLPX,6HSOLHPX,5HSOFPX, 5HSOLTX ,6HSOLHTX,5HSOF00000360
     2TX,5HSBLTX,6HSBLTHX,4HSFDX  /                                        00000370
      DATA (TITLE3(I),I=1,6)/4HSOLP,5HSOLHP,4HSOFP,4HEOLP,5HEOLHP,4HEOFP00000380
     1/                                                                    00000390
      DATA(TITLE4(I),I=1,6)/4HSOLT,5HSOLHT,4HSOFT,4HEOLT,5HEOLHT,4HEOFT/00000400
```

②

```
      DATA(TITLE5(I),I=1,6)/3HSBL,4HSBLH,3HSFD,3HFDL,4HFDLH,3HEFD /
      DATA (TITLE6(I),I=1,10) / 6HEFT   =,6HSYLCT=,6HELT   =,6HTL    =,6HE1
     1T   =,6HPD    =,6HVLT   =,6HSOF   =,6HSYLT =,6HSFD   =   /
      DATA (TITLE7(I),I=1,14) / 6HTO    =,6HTE    =,6HPW    =,6HSOL   =,6HS
     1LH =,6HSOLP =,6HSOLHP=,6HSOFP =,6HSOLT =,6HSOLHT=,6HSOFT =,6HSBL
     2=,6HSBLH =,6HK     =   /
      DATA (HEADER(1,I),I=1,4) /6HBALANC,6HED IN ,6HPLANE ,6HWRAP   /
      DATA (HEADER(2,I),I=1,4) /6HGEODES,6HIC ISO,6HTENSOI,6HD
C
C
      RAD=57.2958
C
C  READ INPUT.
C
 1000 READ(5,1992) THDNG
      IEXIT = 0
      KOUNTC = 0
 1992 FORMAT(12A6)
      WRITE(6,1994) THDNG
 1994 FORMAT(1H1,31X,12A6)
      READ (5,1993) VLEN,A,XO1,XO2,C
     X , RHOL, ALFL, SYL, DSYLDT, SYLC, DSYCDT
     X ,EL, DELDT, E1, DE1DT, VL, DNULDT
     X ,RHOG, ALFF, EF, DEFDT, BIK
     X,PD  ,SOF,SOL,TR,TDF,TDL,
     XTO,SFD,EBLH,TL,SOLH,CYLN
     X , IRCASE
     X,EBL
 1993 FORMAT (5E12.8/6E12.8/6E12.8/5E12.8/ 6E12.8/ 6E12.8,7X,I1/E12.8)
 199  FORMAT(3E12.8                ,36X
     X ,I1)
      PAGE=0
C
      WRITE(6,2020)VLEN,A,XO1,XO2,C
 2020 FORMAT(42X,5HINPUT // 6X,4HVLEN  15X,1HA,17X,3HXO1,15X,3HXO2,17X,
     11HC / 2X,F10.3,8X,F11.4,7X,F10.3,8X,F10.3,8X,F12.5 // )
      WRITE(6,2022)RHOL,ALFL,SYL,DSYLDT,SYLC,DSYCDT
 2022 FORMAT (7X,4HRHOL,13X,4HALFL,16X,3HSYL,13X,6HDSYLDT,14X,4HSYLC,11X
     1,6HDSYCDT / 1X,F11.3,8X,F12.8,6X,F10.1,8X,F9.1,9X,F10.1,8X,F8.1//)
      WRITE (6,2024)EL,DELDT,E1,DE1DT,VL,DNULDT
```

```
 2024 FORMAT (7X,2HEL,15X,5HDELDT,15X, 2HE1,14X,5HDEIDT,15X,2HVL,13X,6HD00000810
     1NULDT / 2X,1PE14.7,6X,0PF9.1,9X,1PE14.7, 4X,0PF9.1,9X,F9.5,9X,F12.00000820
     17// )                                                            00000830
      WRITE (6,2026)RHOG,ALFF,EF,DEFDT,BIK                             00000840   12
 2026 FORMAT (6X,5HRHO G,13X,7HALPHA F13X,2HEF 14X,5HDEFDT 16X,1HK / 2X 00000850
     1F10.5,9X,1PE14.7,4X,1PE14.7,5X,0PF9.1,9X,F9.5 // )               00000860
      WRITE (6,2028)PD,SOF,SOL,TR,TDF,TDL                              00000870   13
 2028 FORMAT (7X,2HPD,16X,3HSOF,16X,3HSOL,14X,2HTR,16X,3HTDF,14X,3HTDL /00000880
     12X,F11.1,5X,1PE14.7,4X,1PE14.7,4X,0PF9.2,9X,F9.2,9X,F9.2  //)   00000890
      WRITE (6,2030) TC,SFD,EBLH,TL,SOLH,CYLN                          00000900
     1,EBL                                                             00000910   14
 2030 FORMAT (7X,2HTO,15X,3HSFD,16X,4HEBLH,13X,2HTL,16X,4HSOLH,14X,4HCYL00000920
     1N/2X,F11.5,8X,1PE14.7,4X,1PE14.7,4X,0PF8.4,7X,1PE14.7,7X,0PF14.2  00000930
     2 //                    5X,6H EBL   / 2X,1PE14.7 // )             00000940
C                                                                     00000950
CALL TESTO(A,B) IF B=1,A HAS NOT BEEN INPUT, IF B=0, A HAS BEEN INPUT. 00000960
      CALL TESTO(SOLH,ISOLH)                                          00000970   15
      CALL TESTO(EBLH,IEBLH)                                          00000980   17
      CALL TESTO(SFD,ISFD)                                            00000990   19
      CALL TESTO( TL,ITL)                                             00001000   21
      CALL TESTO(TO,ITO)                                              00001010   23
      CALL TESTO(PD,IPD)                                              00001020   25
      CALL TESTO(EBL,IEBL)                                            00001030   27
      MANDRE = 0                                                      00001040
C  XS1 ARRAY SAVES XO1 AND XO2 FOR THE FIRST END.                     00001050
C  XS2 ARRAY SAVES XO1 AND XO2 FOR THE SECOND END.                    00001060
C                                                                     00001070
      XS1(1)=XO1                                                      00001080
      XS2(1)=XO2                                                      00001090
      XS1(2)=XO2                                                      00001100
      XS2(2)=XO1                                                      00001110
      DO1=XO1/A                                                       00001120
      DO2=XO2/A                                                       00001130
      D=DO1                                                           00001140
      ABIG=(XO1+XO2)/VLEN                                             00001150
      VLA=VLEN/A                                                      00001160
      CALL TESTO (C,JJ)                                               00001170   30
      ISO = 2                                                         00001180
      IF (JJ.EQ.0) ISO = 1                                            00001190
      IF(ISO.EQ.2.AND.XO1.NE.XO2) GO TO 8001                          00001200
```

4

```
C
C  CHECK INPUT.
C
      WRITE (6,1994) THDNG
      NEND=0
      IF (IEXIT.EQ.0) GO TO 1004
      GO TO 1250
 8001 WRITE(6,8002)
 8002 FORMAT(1H09X,18HCANNOT RUN PROBLEM  )
      GO TO 1250
1004  ISTART=0
      NEND=NEND+1
 1003 CALL CKIN
C                    KOUNTC LIMITS ITERATIONS ON C.
      KOUNTC = KOUNTC + 1
      IF(KOUNTC .GT. 10) GOTO 1225
      IF(IEXIT .NE. 0) GO TO 1250
1001  IFST=0
      ISND=0
      KJK=0
      DO 777 I=1,2
      VOL(I)=0.0
      ARC(I)=0.0
777   AREA(I)=0.0
      JUMP=0
      NIBP=1
      NI=0
      CTR=0.
      NIBPC=0
      N=2
      CONA=0.
      FF=FLOAT (NIBP)
      NSTOP=0
      QT=1.0
      TI(1)=0.
      TI(2)=1.0
      PRIOR(1)=TI(1)
      PRIOR(2)=TI(2)
      U=0.
      DELT=.01
```

83

78

5

```
9997  CALL RUNKUT
      IF(IFST .GE. 200 .OR. ISND .GE. 200) GO TO 1220
      IF(NEND.EQ.2) GO TO 752
      IFST=IFST+1
      IFSV=IFST
C
C  VB1 ARRAY STORES ALL POINTS OF THE FIRST END CONTOUR.
C
      VB1(IFST,1)=Q
      VB1(IFST,2)=Z
      VB1(IFST,3)=U
      VB1(IFST,4)=PHI*RAD
      VB1(IFST,5)=ALPHA*RAD
      VB1(IFST,6)=THETA*RAD
      VB1(IFST,7)=RONE
      VB1(IFST,8)=RTWO
      GO TO 750
752   ISND=ISND+1
      ISSV=ISND
C
C  VB2 ARRAY STORES ALL POINTS OF THE SECOND END CONTOUR.
C
      VB2(ISND,1)=Q
      VB2(ISND,2)=Z
      VB2(ISND,3)=U
      VB2(ISND,4)=PHI*RAD
      VB2(ISND,5)=ALPHA*RAD
      VB2(ISND,6)=THETA*RAD
      VB2(ISND,7)=RONE
      VB2(ISND,8)=RTWO
750   IF(NSTOP) 54,54,999
   54 PRIOR(1)=Q                                          206 7830
      PRIOR(2)=Z                                          206 7840
      PRIOR(5)=U                                          206 7850
      PRIOR(6)=THETA                                      206 7860
      PRIOR(7)=PHI                                        206 7870
      CPREV=CTR
      NPREV=NSTOP
      JUMP=1
      GO TO 9997
```

78

```
999   IF(ISO.GT.1) GO TO 994
      IF(CPREV.EQ.-1.0)                GO TO 801
C
C  ITERATE FOR LAST POINT - INPLANE WRAP - NOT ON A SPHERE
      ZP=PRIOR(2)
      UP=PRIOR(5)
      DELU=DELT/2.0
      CZ = C
      SK= 4.0*KAY**2
      UL=UP+DELU
C
C                    INITIALIZE LAST DIFFERENCE OF ZL2-ZL1 TO A POSITIVE
C                    VALUE AS ZL2 WILL ALWAYS BE GREATER THAN ZL1 AT THE
C                    NEXT TO LAST POINT OF THE COUNTOUR.
      ZDLAST = 1.
  830 ZL1 = ABIG*UL + C
      RADIC=SK-(ABIG*UL+CZ+ ZP)**2
      IF(RADIC .LT. 0.0) GO TO 1234
  760 ZL2=ZP-(UL-UP)/(ABIG*UL+CZ + ZP) * SQRT(RADIC)                    124
      IF(ABS(ZL1-ZL2).LE.1.E-6) GO TO 848
      KJK=KJK+1
      IF(KJK .GT. 100) GO TO 1234
      IF(ZL2 .GT. ZL1) GO TO 846
      IF(ZDLAST .GT. 0.0) DELU = DELU/2.0
C                    HALVE DELU ONLY WHEN  A SIGN CHANGE HAS OCCURRED
C                    SINCE THE LAST INCREMENT OR DECREMENT OF U.
      UL = UL - DELU
  844 ZDLAST = ZL2 - ZL1
C                    RESET THE DIFFERENCE OF ZL2-ZL1 AT EACH ITERATION.
      GO TO 830
  846 IF(ZDLAST .LT. 0.0) DELU = DELU /2.0
      UL = UL + DELU
      GO TO 844
  802 WRITE(6,7654)                                                     143
 7654 FORMAT(10X,72HUNABLE TO CALCULATE LAST POINT-INPLANE WRAP-ON A SPH
     1ERE... CHECK INPUT              )
      GO TO 1250
 1220 WRITE(6,1222)                                                     145
 1222  FORMAT(10X, 55HNUMBER OF PTS. ON HEAD EXCEEDS DIMENSIONED SIZE OF
     1 200       )
```

```
      GO TO 1250
 1225 WRITE(6,1226) CLAST,C                                          147
 1226 FORMAT(10X,34HUNABLE TO ITERATE ON C.      CLAST=,E15.8,5X,3HC =
     1, E15.8)
      GO TO 1250
 1234 WRITE(6,1235)                                                  149
 1235 FORMAT(10X, 76HUNABLE TO CALCULATE LAST POINT-INPLANE WRAP-NOT ON
     1A SPHERE... CHECK INPUT.          )
 1250 CALL EXITO(IRCASE)                                             151
      GO TO 1000
848   Z=ZL1
      U=UL
      Q=SQRT(     KAY**2/Z**2 -1.0) *(-1.0)                          154
      RTWO=     KAY*A
      IF(NEND.EQ. 2) GO TO 843
C                          FOR INPLANE WRAP, SET RONE OF LAST POINT TO
C                          THE RONE OF THE NEXT TO LAST POINT.
      RONE = VB1(IFST-1,7)
      GO TO 849
  843 RONE = VB2(ISND-1,7)
      GO TO 849
994   IF(CPREV.NE.-1.0) GO TO 9941
C
CALCULATE LAST POINT - ISOTENSOID - ON A SPHERE.
      SX=PRIOR(5)-SQRT(ABS((RTWO/A)**2-PRIOR(2)**2))                 166
      Z=D
      U=SX+SQRT(ABS((RTWO/A)**2-D**2))                               167
      Q=(SX-U)/D
      RONE=RTWO
      GO TO 849
C
CALCULATE LAST POINT - ISOTENSOID - NOT ON A SPHERE
9941  Z=D
      Q=SQRT(4.0*KAY**2/D**2-1.0) *(-1.0)                            170
      U=PRIOR(5)+(D-PRIOR(2))/SQRT(ABS(4.0*KAY**2/((D+PRIOR(2))/2.0)**2
     X -1.0))                                                        171
      RTWO  =  KAY * A
      RONE=0.0
      GO TO 849
C
```

8

```
CALCULATE LAST POINT - INPLANE WRAP - ON A SPHERE
801   SX=PRIOR(5)-SQRT(ABS((RTWO/A)**2-PRIOR(2)**2))                174
      AX=ABIG**2+1.0
      BX=2.0*(ABIG*C-SX)
      CX=C**2+SX**2-(RTWO/A)**2
      RADIC=BX**2-4.0*AX*CX
      IF(RADIC .LT. 0.0) GO TO 802
  835 ROOT1=(-BX+SQRT(RADIC))/(2.0*AX)                              179
      ROOT2=(-BX-SQRT(RADIC))/(2.0*AX)                              180
      U=AMAX1(ROOT1,ROOT2)
      Z=ABIG*U+C
      Q=(SX-U)/Z
      RONE=RTWO
849   PHI=ATAN(-1.0/Q)                                              182
      ALPHA=1.5707963
      THETA=0.0
850   GO TO (851,852),NEND
851   VB1(IFST,1)=Q
      VB1(IFST,2)=Z
      VB1(IFST,3)=U
      VB1(IFST,4)=PHI*RAD
      VB1(IFST,5)=ALPHA*RAD
      VB1(IFST,6)=THETA*RAD
      VB1(IFST,7)=RONE
      VB1(IFST,8)=RTWO
      GO TO 853
852   VB2(ISND,1)=Q
      VB2(ISND,2)=Z
      VB2(ISND,3)=U
      VB2(ISND,4)=PHI*RAD
      VB2(ISND,5)=ALPHA*RAD
      VB2(ISND,6)=THETA*RAD
      VB2(ISND,7)=RONE
      VB2(ISND,8)=RTWO
853   IF(ISO.EQ.2) GO TO 991
      GA=DO1*VLA/(DO1+DO2)*(1.-C/DO1)
      TEST=ABS((U-GA)/U)
      ISTART=ISTART+1
      IF(TEST.LE.1.E-4) GO TO 991
C
```

9

```
C   ITERATE FOR THE CORRECT VALUE FOR C.
C
      IF(ISTART.GT.1) GO TO 997
      ULAST=U
      CLAST=C
      GLAST=GA
      C=C*GA/U
      GO TO 1003
997   CS=C
      IF(ISTART.GT.50) GO TO 991
      UM=(U-ULAST)/(CS-CLAST)
      GM=(GA-GLAST)/(CS-CLAST)
      C=CS+(GA-U)/(UM-GM)
      CLAST=CS
      ULAST=U
      GLAST=GA
      GO TO 1003
991   CSAV(NEND)=C
      IF(ISO.EQ.2)GO TO 988
      IF(NEND.GE.2) GO TO 992
      XO1=XS1(2)
      XO2=XS2(2)
      DO1=XO1/A
      DO2=XO2/A
C
C   APPROXIMATE C VALUE FOR THE SECOND END.
C
      KOUNTC = 0
      IF(ABS(XO1-XO2).LE.1.E-4) GO TO 1004
      C=(DO1+DO2)/VLA *(DO2*VLA/(DO1+DO2) -0.6)
C
C   RETURN TO PERFORM CALCULATIONS FOR THE SECOND END.
C
      GO TO 1004
988   ALFO=VB1(1,5)/RAD
      GO TO 993
992   ALFO=AMAX1(VB1(1,5),VB2(1,5))/RAD
 993  IF (CYLN.LE.0.0) GO TO 987
      TLENTH = ABS((VB1(IFSV,3)+VB2(ISSV,3))*A - VLEN)
      IF(TLENTH .LT. 0.001 * VLEN) GO TO 987
```

```
      VLEN = (VB1(IFSV,3)+VB2(ISSV,3)) * A
      NEND = 0
      ABIG = (XO1+XO2)/VLEN
      VLA = VLEN / A
      GO TO 1004
987   NISO=3-ISO
      PAGE = PAGE + 1
      WRITE( 6,1994) THDNG                                              249
      WRITE (6,970) PAGE                                                251
  970 FORMAT(1H0,31X,26HDESIGN DATA AT THE EQUATOR, 40X,4HPAGE,I4//)
      WRITE(6,972) (TITLE6(I),AZ(I),I=1,10)                             252
  972 FORMAT(19X,A6,4X,E15.8,20X,A6,4X,E15.8 )
      WRITE(6,974)                                                      260
  974 FORMAT(//46X,11HHEAD NO.  1,14X,11HHEAD NO.  2  //)
      WRITE(6,976) (TITLE7(I),AZZ(1,I),AZZ(2,I),I=1,14)                 261
  976 FORMAT(24X,A6,4X,10X,E15.8,10X,E15.8 )
C
CALCULATE VALUES TO BE PRINTED AND THEN SCRATCHED.
C
      DO 700 NEND=1,NISO
      IF(NEND.EQ.2) GO TO 892
      IB=IFSV
      IFV(1) = IB                                                       RM
C SAVE NUMBER OF POINTS ON FIRST HEAD FOR SUBR SERVICE CYCLE IN IFV(1)
      GO TO 990
892   IB=ISSV
      IFV(2) = IB                                                       RM
C SAVE NUMBER OF POINTS ON 2ND   HEAD FOR SUBR SERVICE CYCLE IN IFV(2)
990   K=0
      IA=1
      TO=TE/(BIK*COS(ALFO)**2)                                          283
      DO 800 J=1,IB
      K=K+1
      IF(NEND.EQ.2) GO TO 3
      Z=VB1(J,2)
      U=VB1(J,3)
      RONE =VB1(J,7)
      RTWO=VB1(J,8)
      ALPHA=VB1(J,5)/RAD
      IF(J.EQ.1) GO TO 40
```

10

```
      THETA=VB1(J,6)/RAD
      PHI=VB1(J,4)/RAD
C
CALCULATE AREA INCREMENT AND ADD TO THE AREA SUM.
      DAREA=3.14159*(Z+VB1(J-1,2))*SQRT(ABS((Z-VB1(J-1,2))**2+(U-VB1(J-1
     X,3))**2))*A**2
C
CALCULATE VOLUME INCREMENT AND ADD TO THE VOLUME SUM.                    303
      DVOL=1.57080*(VB1(J-1,2)**2-Z**2)*(U+VB1(J-1,3))*A**3
C
CALCULATE ARC LENGTH INCREMENT AND ADD TO THE ARC SUM.
      IF (ISO.EQ.2) GO TO 4200
      IF(PHI-.78540) 42,42,43
42    DARC=A*VB1(J-1,2)*(VB1(J-1,6)/RAD-THETA)/SIN(ALPHA)                313
      GO TO 41
43    DARC=A*(U-VB1(J-1,3))/(SIN(PHI)*COS(ALPHA))                        318   319
      GO TO 41
 4200 DEEZ = Z - VB1(J-1,2)
      DEEU = U - VB1(J-1,3)
      SQEZU = SQRT(DEEZ**2 + DEEU**2)                                    324
      ALAVG =(ALPHA + VB1(J-1,5)/RAD)/2.0
      DARC = SQEZU * A / COS(ALAVG)                                      326
      DTHETA = DARC * SIN(ALAVG) / (Z*A)                                 327
      THETA = VB1(J-1,6)/RAD  - DTHETA
      VB1(J,6) = THETA * RAD
      GO TO 41
3     Z=VB2(J,2)
      U=VB2(J,3)
      RONE =VB2(J,7)
      RTWO=VB2(J,8)
      ALPHA=VB2(J,5)/RAD
      IF(J.EQ.1) GO TO 40
      THETA=VB2(J,6)/RAD
      PHI=VB2(J,4)/RAD
C
CALCULATE AREA INCREMENT AND ADD TO THE AREA SUM.
      DAREA=3.14159*(Z+VB2(J-1,2))*SQRT(ABS((Z-VB2(J-1,2))**2+(U-VB2(J-1
     X,3))**2))*A**2
C
CALCULATE VOLUME INCREMENT AND ADD TO THE VOLUME SUM.                    345
```

11

12

```
      DVOL=1.57080*(VB2(J-1,2)**2-Z**2)*(U+VB2(J-1,3))*A**3
C
CALCULATE ARC LENGTH INCREMENT AND ADD TO THE ARC SUM.
      IF(PHI-.78540) 44,44,45
44    DARC=A*VB2(J-1,2)*(VB2(J-1,6)/RAD-THETA)/SIN(ALPHA)                    352
      GO TO 41
45    DARC=A*(U-VB2(J-1,3))/(SIN(PHI)*COS(ALPHA))                            357   358
41    VOL(NEND)=VOL(NEND)+DVOL
      ARC(NEND)=ARC(NEND)+DARC
      AREA(NEND)=AREA(NEND)+DAREA
C
C  VC ARRAY IS ERASED AFTER PRINTING.
C
40    VC(K,1)=A*Z
      VC(K,2)=A*U
      IF(J .EQ. IB) GO TO 47
C                        BYPASS T CALCULATION AND USE T FROM NEXT TO LAST
C                        POINT WHEN J = IB AND ALPHA IS CLOSE TO 90 DEGS.
      T=TO/Z *COS(ALFO)/COS(ALPHA)                                           372   373
   47 IF(MANDRE.EQ.0) GO TO 3000
      SOLX = SOL
      SOLHX = SOLH
      GO TO 3001
 3000 CONTINUE
      SOLX=  (RTWO/A-COS(ALPHA)/(Z*COS(ALFO)))*(TE*SOF)/TL+(RTWO*SOL)/A      379   380
      SOLHX=  (RTWO*(2.-RTWO/RONE)/A -   COS(ALPHA)*TAN(ALPHA)**2/(Z *
     1COS(ALFO))) * (TE*SOF/TL) + RTWO*(2.-RTWO/RONE)* SOL/A                 381   382   383
 3001 CONTINUE
      EOL = 0.0
      EOLH = 0.0
      EOF = SOF/EF
499   IF(NEND.EQ.2) GO TO 493
      VB1(J,9 )=T
      VB1(J,10) = SOLX
      VB1(J,11) = SOLHX
      VB1(J,12) = SOF
      VB1(J,13) = EOL
      VB1(J,14) = EOLH
      VB1(J,15) = EOF
      GO TO 494
```

9

```
493   VB2(J,9 )=T
      VB2(J,10) = SOLX
      VB2(J,11) = SOLHX
      VB2(J,12) = SOF
      VB2(J,13) = EOL
      VB2(J,14) = ECLH
      VB2(J,15) = EOF
494   ICNT(K)=J
      XFO=VC(K,1)+(T/2.*SIN(PHI))                                    406
      YFO=VC(K,2)+(T/2.*COS(PHI))                                    408
      XFI=VC(K,1)-(T/2.*SIN(PHI))                                    410
      YFI=VC(K,2)-(T/2.*COS(PHI))                                    412
      XM=VC(K,1)-(T/2.+TL)*SIN(PHI)                                  414
      YM=VC(K,2)-(T/2.+TL)*COS(PHI)                                  416
      VC(K,3)=XFO
      VC(K,4)=YFO
      VC(K,5)=XFI
      VC(K,6)=YFI
      VC(K,7)=XM
      VC(K,8)=YM
      IBM=J+1
      IF(K.LT.6) GO TO 800
      K=0
      PAGE=PAGE+1
C
C     WRITE OUTPUT ARRAY
C
      C=CSAV(NEND)
      XO1=XS1(NEND)
      XO2=XS2(NEND)
  298 WRITE (6,1994) THDNG                                           433
      WRITE (6,798)(HEADER(ISO,IXYZ),IXYZ = 1, 4 )    ,PAGE          435
  798 FORMAT (1H0, 31X, 17HDESIGN DATA FOR  4A6,  7HCONTOUR,18X,4HPAGE,I
     X 4/  )
      WRITE(6,198) ABIG,C,VLEN                                       440
  198 FORMAT(10X,18HCONTOUR INPUT DATA,4X,7HABIG = ,F13.6,7X,4HC = ,
     1F13.6,4X,8HV LEN = ,F13.6  )
      WRITE(6,197)(ICNT(I),I=1,6)                                    441
 197  FORMAT( 2X,6I16)
      IF(NEND.EQ.2) GO TO 5
```

13

```
      WRITE(6,24)(TITLE(L),(VB1(I,L),I=IA,J),L=2,9 )                    448
24    FORMAT(1X,A6,2X,6E16.8)
      GO TO 6
5     WRITE(6,24)(TITLE(L),(VB2(I,L),I=IA,J),L=2,9 )                    458
    6 WRITE (6,24)(TITLE2(L),(VC(I,L),I=1,6),L=1,8)                     467
      IF(NEND .EQ. 2) GO TO 500
      WRITE(6,24)(TITLE(L),(VB1(I,L),I=IA,J),L=10,15)                   478
      GO TO 510
  500 WRITE(6,24)(TITLE(L),(VB2(I,L),I=IA,J),L=10,15)                   488
  510 IMAIN =1
C                       THREE CONDITIONS ARE USED IN CALLING SERCYC--
C                       NCOND=1, USES ZERO PRESS. AND ROOM TEMPS.
C                       NCOND=2, USES ZERO PRESS. AND DESIGN TEMPS.
C                       NCOND=3, USES DESIGN PRESS. AND TEMPS.
      DO 570 NCOND=1,3
      GO TO (530,540,550),NCOND
  530 PNN(1)=0.0
      PNN(2)=TR
      PNN(3)=TR
      GO TO 560
  540 PNN(2)=TDL
      PNN(3)=TDF
      GO TO 560
  550 PNN(1)=PD
  560 DELTL = DTL
      DELTF = DTF
      TEMT = TMT
      CALL SERCYC(IMAIN,PNN,IFV,VB1,VB2,KK,NEND,NEND,IA,J)              508
      GO TO (562,564,566),NCOND
  562 WRITE(6,24)(TITLE3(L),(VC(I,L),I=1,6),L=1,6)                      510
      GO TO 570
  564 WRITE(6,24)(TITLE4(L),(VC(I,L),I=1,6),L=1,6)                      520
      GO TO 570
  566 WRITE(6,24)(TITLE5(L),(VC(I,L),I=1,6),L=1,6)                      530
  570 CONTINUE
      IA=IA +6
  800 CONTINUE
      IF(K.EQ.0) GO TO 1005
      IB = IA + K -  1
      PAGE=PAGE+1
```

14

15

```
      WRITE (6,1994) THDNG                                                547
      WRITE (6,798)(HEADER(ISO,IXYZ),IXYZ = 1, 4 )    ,PAGE                549
      WRITE(6,198) ABIG,C,VLEN                                            554
      WRITE(6,197)(ICNT(I),I=1,K)                                         555
      IF(NEND-1) 8,8,9
    8 DO 87 J=2,9
   87 WRITE(6,24) TITLE(J),(VB1(I,J),I=IA,IB)                             564
      GO TO 10
    9 DO 88 J=2,9
   88 WRITE(6,24) TITLE(J),(VB2(I,J),I=IA,IB)                             575
   10 DO 89 J=1,8
   89 WRITE(6,24) TITLE2(J),(VC(I,J),I=1,K)                               585
      IF(NEND .EQ. 2) GO TO 130
      DO 110 J= 10,15
  110 WRITE(6,24) TITLE(J),(VB1(I,J),I=IA,IB)                             597
      GO TO 140
  130 DO 135 J=10,15
  135 WRITE(6,24) TITLE(J),(VB2(I,J),I=IA,IB)                             608
  140 IMAIN =1
      DO 190 NCOND =1,3
      GO TO (150,155,160),NCOND
  150 PNN(1)=0.0
      PNN(2)=TR
      PNN(3)=TR
      GO TO 170
  155 PNN(2)=TDL
      PNN(3)=TDF
      GO TO 170
  160 PNN(1)=PD
  170 DELTL = DTL
      DELTF = DTF
      TEMT = TMT
      CALL SERCYC(IMAIN,PNN,IFV,VB1,VB2,KK,NEND,NEND,IA,IB)               626
      GO TO(172,174,176),NCOND
  172 DO 173 J=1,6
  173 WRITE(6,24) TITLE3(J),(VC(I,J),I=1,KK)                              631
      GO TO 190
  174 DO 175 J=1,6
  175 WRITE(6,24) TITLE4(J),(VC(I,J),I=1,KK)                              642
      GO TO 190
```

```
  176 DO 177 J=1,6
  177 WRITE(6,24) TITLE5(J),(VC(I,J),I=1,KK)                                653
  190 CONTINUE
C
CALCULATE PROPERTIES OF EACH HEAD.
1005  VGR=6.28318*TO*A*COS(ALFO)*ARC(NEND)                                 663
      VLR=AREA(NEND)*TL*((A-(0.5*TO+TL))/A)**2
      VOL(NEND)=VOL(NEND)-(0.5*VGR+VLR)+3.14159*Z**2*U*A**3
      WHF(NEND)=RHOG*VGR
      WL(NEND)=RHOL*VLR
      WH(NEND)=WHF(NEND)+WL(NEND)
      AREA(NEND)=AREA(NEND)+3.14159*Z**2*A**2
      PAGE = PAGE + 1
      WRITE (6,1994) THDNG                                                 675
      WRITE (6,798)(HEADER(ISO,IXYZ),IXYZ = 1, 4 )    ,PAGE                677
      WRITE(6,455) ARC(NEND),AREA(NEND),VOL(NEND)
     X,WL(NEND),WHF(NEND),WH(NEND)                                         682
455   FORMAT(1H09X,15HHEAD PROPERTIES//10X,18HARC LENGTH        =E15.8//
     X10X,18HSURFACE AREA      =E15.8// 10X,18HCONTAINED VOLUME =E15.8//
     X10X,18HWT. OF LINER      =E15.8// 10X,18HWT. OF FILAMENTS =E15.8//
     X10X,18HWT. OF HEAD       =E15.8)
700   CONTINUE
C
CALCULATE PROPERTIES OF CYLINDER.
C                          IF CYLN IS INPUT AS =1,NO CYLINDER EXISTS.
      IF (CYLN.LE.0.0) GO TO 702
      WRITE (6,701)                                                        694
  701 FORMAT  (1H1,
     1        10X,49HNO CYLINDER  ALL CYLINDER STRESSES NON-EXISTENT. /)
      GO TO 358
  702 ALPHO = ATAN(ABIG)                                                   697
      IF(ISO.EQ.2) ALPHO=ALFO
      TH =  PD*A/(     SFD) - TE*TAN(ALFO)**2 - TL*SBL/SFD                 700
      THC = TH/BIK
      IF (ISO.NE.2) GO TO 4562
      CYL = VLEN - A * 2.0 * VB1(IFSV,3)
      ARCYL = CYL / COS(ALPHO)                                             705
      GO TO 4561
 4562 CYL=VLEN-A*(VB1(IFSV,3)+VB2(ISSV,3))
      ARCYL=CYL*SQRT(1.+ABIG**2)                                           710
```

16

ab

17

```
4561 AREAC=6.28318*A*CYL
     VOLC=3.14159*CYL*(A-TO/2.-TL)**2
     WCL=6.28318*CYL*RHOL*TL*(A-(TO+TL)/2.0)
     WCF = 6.28318*CYL*RHOG*(TO+THC)*(A+THC/2.0)
     WCYL=WCL+WCF
     PAGE = PAGE + 1
     WRITE (6,1994) THDNG                                                712
     WRITE (6,798)(HEADER(ISO,IXYZ),IXYZ = 1, 4 )    ,PAGE              714
     WRITE(6,456) CYL,ARCYL,THC,AREAC,VOLC,WCL,WCF,WCYL                 721
456  FORMAT(1H09X,19HCYLINDER PROPERTIES//
    A10X,21HCYLINDER LENGTH      =,E15.8//
    010X,21HARC LENGTH           =,E15.8//
    110X,21HHOOP WRAP THICKNESS =,E15.8//
    210X,21HSURFACE AREA         =,E15.8//
    310X,21HCONTAINED VOLUME     =,E15.8//
    410X,21HWT. OF LINER         =,E15.8//
    510X,21HWT. OF FILAMENTS     =,E15.8//
    610X,21HWT. OF CYLINDER      =,E15.8 )
     IMAIN = 1
     DO 350 NCOND = 1,3
     GO TO (310,320,330),NCOND
  310 PNN(1) = 0.0
     PNN(2) = TR
     PNN(3) = TR
     GO TO 340
  320 PNN(2) = TDL
     PNN(3) = TDF
     GO TO 340
  330 PNN(1) = PD
  340 DELTL = DTL
     DELTF = DTF
     TEMT = TMT
     N1 = 3                                                            TEMP
     N2 = 3                                                            TEMP
     N3 = 1                                                            TEMP
     N4 = 1                                                            TEMP
  350 CALL SERCYC(IMAIN,PNN,IFV,VB1,VB2,KK,N1,N2,N3,N4)
C
CALCULATE PROPERTIES OF ENTIRE VESSEL.                                 737
  358 IF(CYLN .LE. 0.0) GO TO 359
```

96

```
C                    ZERO OUT CYLINDER CONTRIBUTION IF NO CYL. EXISTS.
      AREAC = 0.0
      ARCYL = 0.0
      VOLC  = 0.0
      WCYL  = 0.0
 359  IF (ISO.EQ.2) GO TO 462
      TAREA=AREAC+AREA(1)+AREA(2)
      TARC=ARCYL+ARC(1)+ARC(2)
      TVOL=VOLC+VOL(1)+VOL(2)
      TWT=WCYL+WH(1)+WH(2)
      GO TO 463
 462  TAREA=AREAC+2.0*AREA(1)
      TARC=ARCYL+2.0*ARC(1)
      TVOL=VOLC+2.0*VOL(1)
      TWT=WCYL+2.0*WH(1)
 463  FP=PD*TVOL/TWT
      PAGE = PAGE + 1
      WRITE (6,1994) THDNG                                                  750
      WRITE (6,798)(HEADER(ISO,IXYZ),IXYZ = 1, 4 )   ,PAGE                  752
      WRITE(6,457) TARC,TAREA,TVOL,TWT,FP                                   759
 457  FORMAT(1H09X,17HVESSEL PROPERTIES //
     010X,24HTOTAL ARC LENGTH        =  E15.8//
     110X,24HTOTAL SURFACE AREA      =  E15.8//
     210X,24HTOTAL CONTAINED VOLUME  =  E15.8//
     310X,24HTOTAL WEIGHT            =  E15.8//
     410X,24HPERFORMANCE FACTOR      =  E15.8)
      PO=0.0
      TOL=TR
      TOF=TR
  299 IF (IRCASE.NE.0) GO TO 1000
      IMA = 2
      N1 = 0
      N2 = 0
      N3 = 0
      N4 = 0
      CALL SERCYC(IMA,PNN,IFV,VB1,VB2,KK,N1,N2,N3,N4)                       768
      GO TO 1000
      END
```

18

19

```
$IBFTC AAAP     M94,XR7,DECK
```

20

```
      SUBROUTINE SERCYC (IMAIN,PNN,IFV,VB1,VB2,KK,N1,N3,NJ1,NJ2)
C*****************************************************************
C         SERVICE CYCLE ROUTINE
C     THE PURPOSE OF THIS ROUTINE IS TO DETERMINE THE STRESS AND STRAINS
C     AT EACH PT. ON THE HEAD(S) CONTOUR AND CYLINDER. IT IS USED FOR
C     TWO DISTINCT PURPOSES..IF IMAIN=1,IT IS USED BY MAIN PROG FOR
C     VESSEL DESIGN.  IF IMAIN=2,IT IS USED(FOR A GIVEN DESIGN) TO CYCLE
C     THE VESSEL THRU A SERIES OF PRESSURE AND TEMPERATURES. SEE DOCS.
C     ON USE OF SUB. SERCYC FOR INPUT DESCRIPTION.
C*****************************************************************
C
      DIMENSION PNN(3),VB1(200,16),VB2(200,16),IFV(3)                RM
      DIMENSION THDNG(12),HEADER(2,4)
      DIMENSION AR(200, 3),TITLE( 3),VC(8,20)
      DIMENSION TITLE1(3), TITLE2(2)  ,TITLE3(8)
      DIMENSION AS(200,2,9)
      DIMENSION  VCC(8,4)
C
      INTEGER PAGE,FLAG1,FLAG2,FLAG3,FLAG4
      REAL M31,M32,M33,M34,M35,M36,M37
C
      COMMON ABIG,C,XO,A,PD,BIK,TC,TL,SOF,SOL,SFD,SYL,EF,EL,E1,VL,
     XRHOG,RHOL,ISO,KAY,ALFO,PW,SOLR,SOFR,EOL,P,EBL,ETL,SBL,VLEN,TE
     X,TDL,TDF,TR,DELDT,DE1DT,DEFDT,DSYLDT,DNULDT,DSYCDT,ALFL,ALFF,SYLC
     X,TMIN,SOLT,SOFT,SYLT,SYLCT,E1T,ELT,EFT,VLT,C1,C2,C3,XO1,EBLH,SOLH
      COMMON /DELTAS/ DELTL,DELTF,TEMT,NCOND,CYLN
      COMMON /PRINT/ VC
      COMMON/NV/ PAGE,THDNG
C
      DATA (TITLE(M),M=1,3) / 3HENL,4HENLH,3HENF    /
      DATA (TITLE1(M),M=1,3) / 3HSNL, 4HSNLH, 3HSNF  /
      DATA (TITLE2(M),M=1,2) / 5HDSYLN, 6HDSYLHN /
      DATA  (TITLE3(M),M=1,8) / 6HSFC  =,6HSLC  =,6HSLHC =,6HSFHC =,6HEF
     1C  =,6HELC  =,6HELHC =,6HEFHC =  /
      DATA (HEADER(1,I),I=1,4) /6HBALANC,6HED IN ,6HPLANE ,6HWRAP  /
      DATA (HEADER(2,I),I=1,4) /6HGEODES,6HIC ISO,6HTENSO ,6HID      /
C
C
      KSERC = 0
```

```
C                         KSERC COUNTS THE NUMBER OF SERVICE CYCLES
      ISAV = 0
C                         ISAV, FLAG TO DETERMINE POSITION IN SER-CYC.
      IFV(3) = 1
C                         IFV(3)=1 BECAUSE ONLY ONE PT IS USED FOR CYL.
      IF(IMAIN.EQ.2) GO TO 10
      KK=0
C                         PN,TNL,TNF FOR MAIN PROGRAM EVALUATION.
      PN = PNN(1)
      TNL = PNN(2)
      TNF = PNN(3)
      GO TO 16
C
   10 READ(5,12) PN,TNL,TNF,ISCN
   12 FORMAT(3E12.8,42X,I2)
C     INPUT ISCN=1 FOR FIRST CARD OF SERVICE CYCLE GROUP.
C     INPUT ISCN=0 FOR ALL FOLLOWING CARDS OF SERVICE CYCLE GROUP.
C     INPUT ISCN=-1 FOR LAST CARD PRIOR TO INPUT FOR NEXT DESIGN CASE.
C
      IF(ISCN .EQ. 1) GO TO 16
C                         ISCN=1,USE DESIGN CONDITIONS AS OLD CONDITIONS
C                         FOR STARTING A SER-CYC.
      IF(ISCN .EQ. 0) GO TO 17
      IF(ISAV .NE. 0) GO TO 17
C                         SET OLD CONDITIONS TO DESIGN CRITERIA FOR START-
C                         ING A NEW SERVICE-CYCLE.
   16 EOLDF  = EF
      EOLDL  = EL
      TOF = TR
      TOL = TR
      EO1 = E1
      VOL = VL
      SOYL = SYL
      SOYLH = SYL
      KSERC = KSERC + 1
   17 IF(IMAIN .EQ. 1) GO TO 18
      KK = 0
C                         USE FIXED RANGE FOR DO LOOP DURING SER-CYC.
      N1=1
      N3=3
```

21

9

100

22

```
   18 DO 96 I=N1,N3
      IF(ISO .EQ. 2  .AND.  I .EQ. 2 ) GO TO 96
C                     BYPASS SECOND HEAD CALCULATIONS WHEN EVALUATING
C                     AN ISOTENSOID(ISO=2). WHEN ISO=2, HEAD 1 = HEAD 2
      IF(IMAIN .EQ. 1) GO TO 19
C                         WHEN IMAIN=1 THE PTS ON THE HEAD CONTOUR ARE
C                         EVALUATED SIX PTS PER ENTRY. NJ1 AND NJ2 DEFINE
C                         THE FIRST AND LAST OF EACH SIX PTS.
C                         WHEN IMAIN=2 ALL THE PTS ARE EVALUATED AT ONCE.
      NJ1 =1
      NJ2=IFV(I)
   19 DO 94 J=NJ1,NJ2
      IF (I-2) 20,24,26
C                         I=1  FIRST HEAD
C        FIRST HEAD
C                         VB1 AND VB2 ARRAYS CONTAIN DESIGN DATA FOR HEADS
 20   SOFX  =  VB1(J,12)
      SOLX  =  VB1(J,10)
      SOLHX =  VB1(J,11)
      EOFX  =  VB1(J,15)
      EOLX  = VB1(J,13)
      EOLHX =  VB1(J,14)
      RTWO  =  VB1(J,8)
      RONE  =  VB1(J,7)
      T       =  VB1(J,9)
      ALPHA =  VB1(J,5)
      GO TO 25
C        SECOND HEAD
C                         I=2  SECOND HEAD
 24   SOFX =  VB2(J,12)
      SOLX =  VB2(J,10)
      SOLHX = VB2(J,11)
      EOFX  = VB2(J,15)
      EOLX  = VB2(J,13)
      EOLHX = VB2(J,14)
      RTWO = VB2(J,8)
      RONE = VB2(J,7)
      T       =  VB2(J,9)
      ALPHA= VB2(J,5)
 25   R2R1 = RTWO/RONE
```

10)

23

```
      SOFH = 0.0
      EOFH = 0.0
C      CONVERT ALPHA TO RADIANS.
      ALPHA = ALPHA * .017453
      TEX = BIK*COS(ALPHA)**2    *T                                    66
      TH = 0.0
      TAN2A = TAN(ALPHA)**2                                            67
      GO TO 120
C        CYLINDER
C                          I=3  CYLINDER
   26 SOFX = SOF
      SOLX = SOL
      SOLHX= SOLH
      EOFX = SOF/EF
      TAN2A= TAN(ALFO)**2                                              70
      TH = PD*A/(SFD) -TE* TAN2A -TL*SBL/SFD
      SOFH =(PW*A - SOF*TE*TAN2A - TL*SOLH)/ TH
      EOFH = SOFH/EF
      EOLX = EOL
      EOLHX= EOL
      RTWO = A
      R2R1 = 0.0
      TEX = TE
      IF(IMAIN .NE. 1 .OR. NCOND .NE. 1) GO TO 120
C                          COME THIS WAY ONLY WHEN IMAIN AND NCOND = 1
      VCC(1,NCOND) = SOF
      VCC(2,NCOND) = SOL
      VCC(3,NCOND) = SOLH
      VCC(4,NCOND) = SOFH
      VCC(5,NCOND) = EOFX
      VCC(6,NCOND) = EOL
      VCC(7,NCOND) = EOLHX
      VCC(8,NCOND) = EOFH
C                          ABOVE ARRAY VCC STORES WRAP CONDITIONS FOR PRINT
  120 IF(IMAIN .EQ. 1) GO TO 130
      IF(ISCN .EQ. 1)  GO TO 130
      IF(ISCN .EQ. 0) GO TO 180
      IF(ISAV .NE. 0) GO TO 180
C  ABOVE TESTS FOR SERVICE CYCLE SITUATION.
C  FOR FIRST PASS IN SERCYC, INITIALIZE TO ENTRY CONDITIONS.
```

109

24

```
  130 SOLDH = SOLHX
      SOLDL = SOLX
      SOLDF = SOFX
      SOLDFH= SOFH
      DEOL = 0.
      DEOLH= 0.
      GO TO 200
C      THIS ROUTE IS USED IN SERCYC AFTER THE FIRST PASS THRU. IT SETS
C     CONDITION TO THOSE EXISTING AFTER THE LAST PASS THRU SERCYC.
  180 IF(I .NE. 3) GO TO 186
C       FOR CYLINDER(I=3) USE CONDITIONS AT CYL. FROM PREV. PASS THRU
C       SERCYC.  IF ON FIRST PASS IN SERCYC, USE DESIGN CONDITIONS.
      SOLDL = SNLCY
      SOLDH = SNLHCY
      SOLDF = SNFCY
      SOLDFH = SNFHCY
      SOYL = SYLCY
      SOYLH = SYLHCY
      DEOL = DOLCY
      DEOLH = DOLHCY
      GO TO 200
  186 SOLDL = AS(J,I,1)
      SOLDH = AS(J ,I,2)
      SOLDF = AS(J ,I,3)
      SOYL  = AS(J ,I,4) + AS(J ,I,6)
      SOYLH = AS(J ,I,5) + AS(J ,I,7)
      DEOL = AS(J,I,8)
      DEOLH= AS(J,I,9)
  200 IF(IMAIN .EQ. 1) GO TO 190
C                          THE PROPER DTL,DTF, AND TMT DEPEND ON WHETHER
C                          SERCYC IS BEING USED BY MAIN OR AS A SERV-CYCLE.
C                          IF BEING USED BY MAIN, THEY ARE SET TO ZERO WHEN
C                          NCOND=1. WHE NCOND=2 OR 3,THEY ARE CALCULATED IN
C                          SUB. CKIN AND TRANSFERRED THRU MAIN.
      DTF = TNF - TOF
      DTL = TNL - TOL
      TMT = ALFL * DTL - ALFF * DTF
      GO TO 204
  190 IF(NCOND .NE. 1) GO TO 203
      DTL = 0.
```

25

```
      DTF = 0.
      TMT = 0.
      GO TO 204
  203 DTL = DELTL
      DTF = DELTF
      TMT = TEMT
  204 ENF  = EOLDF + DEFDT * DTF
      ENL  = EOLDL + DELDT * DTL
      EN1 = EO1 + DE1DT * DTL
      VNL = VOL + DNULDT * DTL
      SNYL = SOYL + DSYLDT * DTL
      SNYLH = SOYLH + DSYLDT * DTL
C                          INITIALIZE FLAGS TO ZERO
      FLAG1 = 0
      FLAG2 = 0
      FLAG3 = 0
      FLAG4 = 0
C                          THERE ARE FOUR POSSIBLE PATHS FOR THE INTERMED.
C                          CALCULATIONS NECESSARY TO COMPUTE NEW STRESSES.
C                          AN INITIAL PATH IS SELECTED BASED ON INITIAL
C                          STRESSES. ONCE A PATH IS SELECTED ITS FLAG IS
C                          SET TO ONE TO PRECLUDE COMING BACK THRU THE SAME
C                          PATH IF THE NEW STRESSES ARE IN THE WRONG RANGE
C                          AND A SECOND PATH MUST BE SELECTED.
      IF(SOLDH - SOYLH        .GE. 0.) GO TO 32
  205 FLAG1 = 1
      GO TO 40
   32 IF(SOLDL - SOYL         .GE. 0.) GO TO 207
  206 FLAG2 = 1
      GO TO 42
  207 FLAG3 = 1
      GO TO 44
  208 FLAG4 = 1
      GO TO 70
C        CASE NO. 1
   40 M31 = 1.0 + ENF*TEX/(ENL*TL) - ENF*VNL*TEX*TAN2A /(ENL*TL)
      M32 = ENF* PN* RTWO/(ENL*2. * TL) * (1. - VNL*(2. -R2R1)) - ENF *(
     1SOLDL - VOL*SOLDH)/ EOLDL + ENF* TMT + ENF*SOLDF/ EOLDF
      IF (I .EQ.3) GO TO 60
C        HEADS
```

104

26

```
      M33 = 0.0
      M34 = 1.0
      M35 = 0.0
      M36 = 0.0
C     M36 = 0.0 BECAUSE TH IS ALWAYS ZERO FOR THE HEADS.
      GO TO 220
C        CYLINDER
   60 M33 = ENF*PN*RTWO/(ENL*TL) * (1.-VNL/2.) - ENF*(SOLDH -VOL*SOLDL)/
     1EOLDL + ENF*TMT + ENF*SOLDFH/EOLDF
      M34 = 1.0 + ENF * TH /(ENL * TL)
      M35 = TE * ENF*(VNL-TAN2A)/(TL*ENL)
      M36 = VNL* TH * ENF/(TL*ENL)
 62   GO TO 220
C        CASE 2
 42   M31 = 1.0 + ENF*TEX/(ENL*TL) - ENF*TEX*TAN2A/(2.0*EN1*TL)
      M32 = ENF*PN*RTWO/(ENL*2.0*TL) - ENF*PN*RTWO*(2.-R2R1 )/(4.0*EN1*T
     1L )- ENF*(SOLDL-VOL*SOLDH)/EOLDL + SNYLH        * (ENF/(2.*EN1) -
     2VNL*ENF/ENL) + ENF*TMT + ENF*SOLDF/ EOLDF
      IF (I .EQ.3) GO TO 64                                          RM
C        HEADS
      M33 = 0.0
      M34  = 1.0
      M35 = 0.0
      M36 = 0.0
      GO TO 220
C        CYLINDER
   64 M33 = ENF*PN*RTWO/(EN1*TL) - VNL*ENF*PN*RTWO/(ENL*2.*TL) - SNYL
     1   * (ENF/EN1 - ENF/ENL) - ENF*(SOLDH - VOL*SOLDL)/EOLDL + ENF*TMT
     2 + ENF*SOLDFH/EOLDF
      M34 = 1.0 + TH*ENF/(TL*EN1)
      M35 = TE /TL * (-ENF*TAN2A/EN1 + VNL*ENF/ENL)
      M36 = ENF * TH / (2.0 * EN1*TL)
 66   GO TO 220
C        CASE 3
 44   M31 = 1.0 +TEX/TL * ENF/EN1 - ENF*TEX*TAN2A /(2.0*EN1*TL)
      M32 = ENF*PN*RTWO*R2R1/(4.*EN1*TL) + SNYLH       *(ENF/(2.*EN1) -
     1ENF*VNL/ENL) + SNYL       * (ENF/ENL - ENF/EN1) + ENF*TMT - ENF/
     2EOLDL*(SOLDL - VOL*SOLDH) + ENF*SOLDF/EOLDF
      IF ( I.EQ.3) GO TO 68
C        HEAD
```

27

```
      M33 = 0.0
      M34 = 1.0
      M35 = 0.0
      M36 = 0.0
      GO TO 220
C        CYLINDER
   68 M33 = ENF*PN*RTWO*3./(EN1*TL*4.) - SNYLH        * (ENF/EN1 - ENF/
     1ENL) + SNYL       *(ENF/(2.*EN1) - VNL*ENF/ENL) - ENF*(SOLDH - VOL*
     2SOLDL)/EOLDL + ENF*TMT + ENF*SOLDFH/EOLDF
      M34 = 1.0 + TH * ENF/(TL*EN1)
      M35 = TE *ENF/(TL*EN1)*(.5-TAN2A)
      M36 = ENF*TH/(2.0*EN1*TL)
      GO TO 220
C        CASE  4
   70 M31 = 1. + TEX*ENF/(TL*EN1) - VNL*ENF*TEX*TAN2A/(ENL*TL)
      M32 = ENF*(PN*RTWO*.5/TL) * (1./EN1 - VL*(2.-R2R1)/ENL) - ENF/
     1EOLDL * (SOLDL - VOL*SOLDH) + SNYL*(ENF/ENL - ENF/EN1) + ENF *
     2(ALFL*DTL - ALFF*DTF) + ENF*SOLDF/EOLDF
      IF(I .EQ. 3) GO TO 78
C         HEAD
      M33 = 0.0
      M34 = 1.0
      M35 = 0.0
      M36 = 0.0
      GO TO 220
C        CYLINDER
   78 M33 = ENF* .5*PN*RTWO/TL * ((2.-R2R1)/ENL - .5/EN1) - ENF/EOLDL *
     1(SOLDH - VOL*SOLDL) + SNYL*(.5*ENF/EN1 - ENF*VL/ENL) + ENF*(ALFL*
     2DTL - ALFF*DTF) + ENF*SOLDFH/EOLDF
      M34 = 1. + ENF*TH/(ENL*TL)
      M35 = TEX/TL *(.5*ENF/EN1 - ENF*TAN2A/ENL)
      M36 = VNL* TH*ENF/(TL*ENL)
  220 SNF =(M32 + M36*M33/M34)/(M31-M36*M35/M34)
      SNFH =(M33 + M35*SNF)/M34
      SNL = PN*RTWO/(2.0*TL) - TEX*SNF /TL
      SNLH = PN*RTWO/(2.0*TL)*(2.0-R2R1) - TEX*SNF*TAN2A/TL  - TH*SNFH/
     1TL
C                        COMPUTE STRESSES AND THEN TEST TO SEE IF THE
C                        PROPER PATH WAS SELECTED.
      IF (SNLH-SNYLH.GE.0.0) GO TO 221
```

```
      IF(SNL-SNYL .GE. 0.0) GO TO 218
      IF (FLAG1.EQ.1) GO TO 210
      GO TO 205
  218 IF(FLAG4 .EQ. 1) GO TO 210
      GO TO 208
  221 IF (SNL-SNYL.GE.0.0) GO TO 222
      IF (FLAG2.EQ.1)GO TO 210
      GO TO 206
  222 IF (FLAG3.EQ.1) GO TO 210
      GO TO 207
  210 IF(IMAIN .NE. 1) GO TO 224
      ALDTL = ALFL * DTL
      GO TO 226
  224 ALDTL = ALFL*(TNL - TR)
  226 EPOL = (SOLX - VL*SOLHX)/EL
      EPOLH=(SOLHX - VL*SOLX)/ EL
      CALL STRAIN (SNYL,SNYLH,EN1,ENL,SNL,SNLH,ALDTL,VNL,EPOL,EPOLH,
     1EPL,EPLH,DSYLN,DSYLHN,DEOL,DEOLH,DEL,DELH)
      IF(IMAIN .EQ. 2) GO TO 215
      EPF = SNF/ENF + ALFF*DTF
      EPFH = SNFH/ENF + ALFF*DTF + (SOF - SOFH)/EF
      KK = KK +1
C                          VC ARRAY STORES SIX PTS AT A TIME FOR PRINT IN
C                          MAIN PROGRAM. USED FOR HEAD CONTOURS ONLY.
      VC(KK,1) = SNL
      VC(KK,2) = SNLH
      VC(KK,3) = SNF
      VC(KK,4) = EPL
      VC(KK,5) = EPLH
      VC(KK,6) = EPF
      VC(KK,9) = SNFH
      VC(KK,10)= EPFH
      IF(I .NE. 3) GO TO 94
C                          STORE INTO VCC FOR NCOND = 1 ,2, AND 3
      NCD = NCOND + 1
C                          VCC ARRAY STORES CYLINDER DATA FOR PRINT OUT.
      VCC(1,NCD) = SNF
      VCC(2,NCD) =SNL
      VCC(3,NCD) =SNLH
      VCC(4,NCD) =SNFH
```

197

28

107

29

```
      VCC(5,NCD) =EPF
      VCC(6,NCD) =EPL
      VCC(7,NCD) =EPLH
      VCC(8,NCD) =EPFH
C                          VCC AND VC ARRAY ARE USED ONLY WHEN IMAIN=1
      IF(NCOND .NE. 3) GO TO 94
C                          PRINT VCC ARRAY ONLY AFTER FILLED(NCOND=3).
      PAGE = PAGE + 1
      WRITE (6,244) THDNG                                                226
      WRITE(6,798) (HEADER(ISO,IXYZ),IXYZ =1,4),PAGE                     228
      WRITE(6,227)                                                       233
  227 FORMAT(1H0, 39X,29HCYLINDER STRESSES AND STRAINS//47X,11HZERO PRES
     1S.,8X,12HDESIGN TEMP.,8X,12HDESIGN TEMP. /30X,4HWRAP,11X,14HAND RO
     2OM TEMP.,6X,15HAND ZERO PRESS.,6X,12HAND PRESSURE  //)
      WRITE(6,232) (TITLE3(L),(VCC(L,M),M=1,4), L=1,8)                   234
  232 FORMAT(10X,A6,4X,4E20.8)
      GO TO 94
  215 EPF = SNF/ENF + ALFF*(TNF - TR)
      EPFH = SNFH/ENF + ALFF*(TNF - TR) + (SOF - SOFH)/EF
      IF (I-2) 230,240,242
  230 IF(J .EQ. 1) KK = 1
C                          AS ARRAY SAVES STRESSES AT ALL PTS ON HEAD
C                          CONTOUR FOR BOTH HEADS FROM PREV. PASS
C                          THESE VALUES ARE NEEDED TO CONTINUE ON TO NEXT
C                          SERVICE-CYCLE.
  231 AS(KK,I,1) = SNL
      AS(KK,I,2) = SNLH
      AS(KK,I,3) =SNF
      AS(KK,I,4) = SNYL
      AS(KK,I,5) = SNYLH
      AS(KK,I,6) = DSYLN
      AS(KK,I,7) = DSYLHN
      AS(KK,I,8) = DEL
      AS(KK,I,9) = DELH
      AR(KK,1) =  EPL
      AR(KK,2) =  EPLH
      AR(KK,3) =  EPF
      KK = KK+1
      GO TO 94
C                     DONT PRINT UNTIL FINISHED WITH ONE HEAD AND STARTING
```

30

```
C                    ON THE NEXT.
 240  IF(J.NE.1) GO TO 231
C       IF J=1 THEN THE PROG HAS FINISHED WITH THE FIRST HEAD.
C        PRINT HEAD ONE
C                    INITIALIZE PRINT COUNTERS.  PTS ARE PRINTED SIX AT
C                    A TIME.
 242  II = 1
      I2 = 6
C                    SET ISON TO VALUE OF OUTER DO LOOP.
      ISON = I
      ISTOP = 0
  243 PAGE = PAGE + 1
      KOUNT = 0
      WRITE (6,244) THDNG                                                272
 244  FORMAT(1H1,31X,12A6)
      WRITE(6,798)(HEADER(ISO,IXYZ),IXYZ = 1,4),PAGE                     274
 798  FORMAT (1H0,31X,17HDESIGN DATA FOR   4A6,7HCONTOUR, 18X,4HPAGE,I4
     1/ )
      WRITE(6,291) KSERC,PN,TNL,TNF                                      279
  291 FORMAT(2X,13HSERVICE CYCLE,I4  ,
     1              9X,5HP NEW,19X,6HTL NEW,19X,6HTF NEW/10X,3F25.4 )
 245  WRITE (6,292) (M,M=II,I2)                                          280
 292  FORMAT (1H0,1X,6I16)
      IF(ISO .EQ. 2 .AND. I .EQ. 3) ISON = 2
C                    DUE TO THE FACT THAT THE PREVIOUS HEAD IS NOT
C                    PRINTED UNTIL THE FIRST POINT IS ENCOUNTERED ON THE
C                    NEXT HEAD, FOR AN ISOTENSOID,WHERE ONLY THE FIRST
C                    HEAD IS PRINTED SINCE HEAD 1 = HEAD 2, THE SUBSCRIPT
C                    FOR WRITING MUST BE DECREMENTED ONE TO PRINT THE
C                    FIRST HEAD. THEN FOR ISO=2,HEAD 1 IS PRINTED WHEN
C                    I=3 WHEN IT IS NORMALLY PRINTED AT I=2 AND J=1.
      K = ISON - 1
      DO 296 L = 1,3
  296 WRITE(6,293) TITLE1(L), (AS(M,K,L  ), M=II,I2)                     289
      DO 294 L = 1,3
  294 WRITE(6,293) TITLE(L),(AR(M,L),M=II,I2)                            298
      DO 298 L = 1,2
  298 WRITE(6,293) TITLE2(L), (AS(M,K,L+5), M=II,I2)                     308
 293  FORMAT (1X,A6,2X,6E16.8)
C                    BUMP PRINT COUNTERS BY 6.
```

109

31

```
C       EFN 94 ENDS LOOP FOR CONTOUR POINTS ON HEADS.
 94   CONTINUE
C                   EFN 96 ENDS LOOP FOR TWO HEADS AND CYLDR.
 96   CONTINUE
C                   SET OLD VALUES TO NEW VALUES PRIOR TO NEXT PASS.
      TOL = TNL
      TOF = TNF
      EOLDF = ENF
      EOLDL = ENL
      EO1 = EN1
      VOL = VNL
      ISAV = 1
      IF(IMAIN .NE. 2) RETURN
C                   IF ON THE LAST PRESS-TEMP CARD ISCN =-1,NO MORE
C                   PRESS-TEMP CARDS ARE TO BE READ. RETURN TO MAIN
C                   PROGRAM AND READ IN NEXT DESIGN CASE.
      IF(ISCN  .EQ. -1)RETURN
      GO TO 10
      END
```

32

```
      II=I2+1
      I2 = II+5
      IF (ISTOP.EQ.1) GO TO 248
      IF(I2 - IFV(ISON-1)) 247,246,235
C                     IF I2 IS GREATER THAN THE NO. OF HAED PTS.,SET I2=
C                     TO THE NO. OF PTS. AND FINISH PRINTING LAST GROUP
C                     OF POINTS.
  235 I2 = IFV(ISON-1)
C                     IFV(ISON- 1) CONTAINS THE NO. OF PTS. ON THE HEAD
C                     CONTOUR.
  246 ISTOP = 1
  247 KOUNT = KOUNT + 1
C                     KOUNT LIMITS THE AMOUNT PRINTED ON EACH PAGE.
      IF(KOUNT - 4) 245,243,243
 248  KK = 1
C                     IF I=2 GO BACK AND FINISH SECOND HEAD CALCULATIONS.
      IF(I.EQ.2) GO TO 231
 260  PAGE = PAGE + 1
C                     BYPASS CYLINDER PRINT OUT IF CYLINDER DOESNT EXIST.
      IF(CYLN .GT. 0.0) GO TO 94
C                          CYLN = 1.0, NO CYLINDER EXISTS.
C                          CYLN = 0.0, CYLINDER EXISTS.
C      SAVE CYLINDER CONDITIONS FOR NEXT PASS THRU SERCYC.
      SNLCY = SNL
      SNLHCY= SNLH
      SNFCY = SNF
      SNFHCY= SNFH
      SYLCY = SNYL + DSYLN
      SYLHCY= SNYLH + DSYLHN
      DOLCY = DEL
      DOLHCY = DELH
      WRITE (6,244) THDNG                                                338
      WRITE (6,798)(HEADER(ISO,IXYZ),IXYZ = 1,4), PAGE                   340
      WRITE(6,291) KSERC,PN,TNL,TNF                                      345
      WRITE (6,261) SNL,SNLH,SNF,SNFH,EPL,EPLH,EPF,EPFH,DSYLN,DSYLHN     346
  261 FORMAT(  //20X, 19HCYLINDER PROPERTIES  /
     X              20X,8HSNL     =,E20.8/20X,8HSNLH    =,E20.8/ 20X,8HSNF
     1   =,E20.8/20X,8HSNFH    =E20.8/ 20X,8HENL     = ,E20.8/ 20X,8HENLH
     2  = ,E20.8/20X,8HENF     =,E20.8/ 20X,8HENFH    = ,E20.8/ 20X,8HDSYL
     3HN = ,E20.8/ 20X,8HDSYLHN =E20.8// )
```

33

```
$IBFTC CKN      XR7,M94,DECK
```

112

34

```
      SUBROUTINE  CKIN
C*****************************************************************************
C     THE PURPOSE OF THIS ROUTINE IS TO SOLVE THE STRESS AND STRAIN
C     EQUATIONS AT THE EQUATOR OF THE HEAD.
C*****************************************************************************
C
      COMMON /FLAG1/ ISOLH,IEBLH,ISFD, ITL,ITO,IPD,IEBL,MANDRE
      COMMON /ERRTN/ IEXIT
      COMMON /PRNT / AZ(10), AZZ(2,14)
      COMMON ABIG,C,XO,A,PD,BIK,TO,TL,SOF,SOL,SFD,SYL,EF,EL,E1,VL,
     XRHOG,RHOL,ISO,KAY,ALFO,PW,SOLR,SOFR,EOL,P,EBL,ETL,SBL,VLEN,TE
     X,TDL,TDF,TR,DELDT,DE1DT,DEFDT,DSYLDT,DNULDT,DSYCDT,ALFL,ALFF,SYLC
     X,TMIN,SOLT,SOFT,SYLT,SYLCT,E1T,ELT,EFT,VLT,C1,C2,C3,XO1,EBLH,SOLH
      REAL KAY,KAYP
      COMMON /NEW/ DTL,DTF,TMT
      REAL M50,M51,M52,M53,M54
      REAL M60
      REAL M70,M71,M72,M73,M74,M75,M76,M77,M78
C
C
      VLSQ  = VL**2
      DTF = TDF - TR
      DTL = TDL - TR
      TMT = ALFL*DTL - ALFF * DTF
      ELT = EL + DELDT * DTL
      E1T = E1 + DE1DT*DTL
      VLT = VL + DNULDT * DTL
      EFT = EF + DEFDT * DTF
      SYLT = SYL + DSYLDT*DTL
      SYLCT = SYLC + DSYCDT*DTL
C        CALCULATE ALFO
      IF (ISO-1)101,101,102
  101 ALFO = ATAN2(ABIG,SQRT(1.-C**2))                                  4      5
      GO TO 103
  102 D = XO1/ A
      ALFO = ATAN2 (D,SQRT(1.-D**2))                                    8      9
  103 TAN2A = TAN(ALFO)**2                                              11
      IF (ISOLH.EQ.1) GO TO 305
C
```

113

35

```
C             IF SOLH IS GIVEN A RIGID MANDREL IS ASSUMED, IF NOT A
C             PRESSURE MANDREL IS ASSUMED AND SOLH IS CALCULATED. IN
C             EITHER CASE FOUR PATHS EXIST WHICH COVER THE ELASTIC/
C             PLASTIC RANGE.
C
      MANDRE = 1
      WRITE (6,104)                                                    15
 104  FORMAT (10X, 45HRIGID MANDREL WINDING PRESSURE IS FICTICIOUS  //)
      IF (IEBLH.EQ.0) GO TO 308
      IF (ISFD.EQ.1) GO TO 400
      IF  (SFD/EFT - SOF/EF - SYLT/ELT + SOL/EL.GE.0.0) GO TO 321
C             PREVIOUS STATEMENT IS AN INITIAL GUESS AT THE PROBABLE
C             LOCATION ON THE STRESS/STRAIN CURVE.
 320  M50 = ELT/EL * (1.0+ VL)/(1.0 + VLT) * (SOL-SOLH)
      M51 = 1.0
      M52 = 1.0
      M53 = M50
      M54 =(M52-VLT)/ ELT
      SBLH =  (SFD/EFT - SOF/EF - M53/ELT -TMT +(SOL-VL*SOLH)/EL) / M54
      SBL = M52 * SBLH + M53
      IF (SBLH-SYLT.LT.0.0) GO TO 313
      IF (SBL-SYLT.LT.0.0) GO TO 322
      GO TO 321
C
 321  M50 = E1T*2.0/(EL*3.0)*(1.0 +VL)*(SOL-SOLH)
      M51 = 1.0
      M52 = 1.0
      M53 = M50
      M54 =  1.0/E1T - 1.0 /(2.0*E1T)
      SBLH =  (SFD/EFT - SOF/EF - M53/E1T - TMT + (SOL-VL*SOLH)/EL + SYL
     1T * (.5/E1T - (1.0-VLT)/ELT))/M54
      SBL = M52 * SBLH + M53
      IF (SBLH-SYLT.LT.0.0) GO TO 320
      IF (SBL-SYLT.LT.0.0) GO TO 322
      GO TO 313
C
 322  M50 = 2.0*E1T*(SOL-SOLH)*(1.0+VL)/(3.0*EL) - SYLT * (1.0-2.*E1T*(
     11.0 + VLT)/(3.0*ELT))
      M51 = 2.0 *E1T*(1.0+VLT)/(3.0*ELT)
      M52 = 1.0/M51
```

114

36

```
      M54 =  M52/ELT - 1.0/(2.0*E1T)
      M53 = M50 / M51
      SBLH =  (SFD/EFT - SOF/EF - M53/ELT - TMT +(SOL-VL*SOLH)/EL - SYLT
     1* (1.0/(2.0*E1T) - VLT/ELT)) /M54
      SBL = M52*SBLH + M53
      IF (SBLH - SYLT.LT.0.0) GO TO 320
      IF (SBL-SYLT.LT.0.0) GO TO 313
      GO TO 321
C
  308 CALL STRESS (SYLT,E1T,ELT,EBLH,SBLH)                                  50
      IF (SBLH-SYLT.GE.0.0)GO TO 311
  310 M50 = ELT/EL * (1.0 + VL)/(1.0+VLT)*(SOL-SOLH)
      M51 = 1.0
      M52 = 1.0
      M53 = M50
      M54 =(M52-VLT)/ELT
      SFD = EFT * (M54*SBLH + M53/ELT +SOF/EF + TMT -(SOL-VL*SOLH)/EL)
      SBL = M52*SBLH + M53
      GO TO 313
C
  311 M50 = E1T/EL* 2.0/3.0 * (1.0+VL)*(SOL-SOLH)
      M51 = 1.0
      M52 = 1.0
      M53 = M50
      M54 = 1.0/E1T - 1.0/(2.0*E1T)
      SFD = EFT *(M54*SBLH + M53/E1T  +SOF/EF + TMT -(SOL-VL*SOLH)/EL
     1- SYLT * (1.0/(2.0*E1T) - (1.0-VLT)/ELT))
      SBL = M52 * SBLH + M53
      IF (SBL-SYLT.LT. 0.0) GO TO 312
      GO TO 313
C
  312 M50 = 2.0*E1T*(SOL-SOLH)*(1.0+VL)/(3.0*EL) - SYLT*(1.0- 2.0*E1T*(1
     1.0 + VLT)/(3.0*ELT))
      M51 = 2.0*E1T*(1.0+VLT) /(3.0*ELT)
      M52 = 1.0/M51
      M53 = M50/M51
      M54 = M52/ELT - 1.0/(2.0*E1T)
      SFD = EFT * (M54*SBLH + M53/ELT +SOF/EF + TMT -(SOL-VL*SOLH)/EL+SY
     1LT * (.5/E1T - VLT/ELT))
      SBL = M52*SBLH + M53
```

115

32

```
313  IF (ITL.EQ.1) GO TO 315
     IF (ITO.EQ.1) GO TO 314
     IF (IPD.EQ.1) GO TO 298
     WRITE (6,297)                                                    71
297  FORMAT (10X,51HDESIGN PRESSURE INCONSISTANT WITH OTHER GIVEN DATA
    1 // )
298  CONTINUE
     TE = BIK*TO*COS(ALFO)**2                                         73
     PD = 2.0/A * (SFD*TE + SBL*TL)
     GO TO 319
314  IF (IPD.EQ.1) GO TO 412
     TE = PD*A/(2.0*SFD) - SBL*TL/SFD
     TO = TE/(BIK*COS(ALFO)**2)                                       78
     GO TO 319
315  IF (ITO.EQ.1) GO TO 420
     IF (IPD.EQ.1) GO TO 410
     TE = BIK*TO*COS(ALFO)**2                                         86
     TL = PD*A/ (2.0*SBL) - SFD*TE/SBL
319  CONTINUE
     AR10 = 2.0 - 2.0*SFD*TE*TAN2A/(PD*A) - 2.0*TL*SBLH /(PD*A)
     PW = 2.0/A * (SOF*TE + SOL*TL)
     GO TO 350
410  WRITE (6,411)                                                    89
411  FORMAT (10X,23HTL OR PD MUST BE INPUT  //)
     GO TO 552
420  WRITE (6,421)                                                    91
421  FORMAT (10X,23HTO OR TL MUST BE INPUT  //)
     GO TO 552
350  SOFP = (SOF/EF - (SOL-VL*SOLH)/EL)/ (1.0/EF + TE*(1.0-VL*TAN2A)/(T
    1L*EL))
     SOLP = -TE*SOFP / TL
     SOLHP = -TE*TAN2A * SOFP /TL
     SOFT =(SOF/EF - (SOL-VL*SOLH)/EL + TMT )/(1.0/EFT + TE*(1.0-VLT*TA
    1N2A)/(ELT*TL) )
     SOLT = -TE*SOFT/ TL
     SOLHT = -TE* SOFT*TAN2A/ TL
     KAYP = 1. - 2.*SFD*TE / (PD*A)
     DNL = (TL*(SBLH-SBL))/(1. -TAN2A)
     KAY = KAYP + (2.*DNL)/(PD*A)
     IF (SOLP.LE. SYLC) GO TO 360
```

76

38

```
      WRITE (6,359 )                                                    96
359   FORMAT (1X,80HLINER YIELDS IN COMPRESSION ON REDUCTION FROM WINDIN
     1G PRESSURE TO ZERO PRESSURE.  //)
360   CONTINUE
      AZ(1) = EFT
      AZ(2) = SYLCT
      AZ(3) = ELT
      AZ(4) = TL
      AZ(5) = E1T
      AZ(6) = PD
      AZ(7) = VLT
      AZ(8) = SOF
      AZ(9) = SYLT
      AZ(10)= SFD
      DO 362 I = 1,2
      AZZ(I,1) = TO
      AZZ(I,2) = TE
      AZZ(I,3) = PW
      AZZ(I,4) = SOL
      AZZ(I,5) = SOLH
      AZZ(I,6) = SOLP
      AZZ(I,7) = SOLHP
      AZZ(I,8) = SOFP
      AZZ(I,9) = SOLT
      AZZ(I,10)= SOLHT
      AZZ(I,11)= SOFT
      AZZ(I,12)= SBL
      AZZ(I,13)= SBLH
  362 AZZ(I,14)= KAYP
C                        STORE DATA IN FORM OF UNEQUAL BOSSES. UNTIL THIS
C                        FEATURE IS ADDED, BOTH HEADS ARE EQUAL.
      RETURN
  400 WRITE (6,402)                                                     118
  402 FORMAT (10X, 14HSFD NOT GIVEN  /)
      GO TO 552
  305 IF (IEBLH.EQ.1) GO TO 600
      IF (ISFD.EQ.1) GO TO 520
      M60 = SFD/EFT - SOF/EF - TMT
      CALL STRESS (SYLT,E1T,ELT,EBLH,SBLH)                              126
      IF(SBLH-SYLT.LT.0.0) GO TO 510
```

117

39

```
      SOLH =  EL * (SOL/EL*(VL-.5) + .75*EBLH - 3.0*M60/2.0 + 3.0*(.5-VL
     1T)*SYLT/(2.0*ELT)) / (1.0- VL/2.0)
      SBL = SBLH +(2.0*E1T*(1.0+VL))/(3.0*EL) * (SOL - SOLH)
      IF(SBL-SYLT.LT.0.0) GO TO 515
      GO TO 313
  510 SOLH = EL * (SOL*(VL-VLT)/EL +EBLH*(1.-VLT**2) -M60*(1.0+VLT))/ (
     11.0-VL*VLT )
      SBL = SBLH +(ELT*(1.0+VL))*(SOL- SOLH)/ (EL*(1.0+VLT ))
      GO TO 313
C
  515 SOLH =  EL * (SOL*(VL-VLT)/EL + EBLH*(1.0-VLT/2.0) - M60*(1.0+VLT)
     1+VLT*(.5-VLT)*SYLT/ELT)/(1.0*VL* VLT)
      SBL = ELT * (3.0*(SBLH-SYLT)/(2.0*E1T) + (1.0 + VLT) * SYLT/ELT +
     1(1.0+VL)*(SOL-SOLH)/EL)/(1.0+VLT)
      GO TO 313
  520 IF (IEBL.EQ.1) GO TO 554
  306 CALL STRESS (SYLT,E1T,ELT,EBLH,SBLH)                              143
      M60 = SOF/EF + TMT -(SOL-VL*SOLH)/EL
      IF (SBLH-SYLT.LT.0.0) GO TO 530
      CALL STRESS (SYLT,E1T,ELT,EBL,SBL)                                148
      IF (SBL-SYLT.LT.0.0) GO TO 528
  524 SOLH = SOL + 3.0*EL*(EBLH-EBL)/( 2.0*(1.0+VL))
      SFD = EFT* (M60 +SBL/E1T -SBLH/(2.0*E1T) +(1.0/ELT - 1.0/(2.0*E1T)
     1- VLT/ELT) * SYLT  )
      GO TO 313
  528 SOLH = SOL + EL*(3.0*EBLH/2.0 -(1.0+VLT)*EBL - (.5-VLT)*SYLT/ELT)
     1/(1.0+VL)
      SFD = EFT * (M60 + SBL/ELT - SBLH/(2.0*E1T) + (1.0/(2.0*E1T) - VLT
     1/ELT)* SYLT)
      GO TO 313
  530 SOLH = SOL + EL*(1.0+VLT)*(EBLH-EBL)/(1.0+VL)
      SFD = EFT * (M60 + (SBL-VLT*SBLH)/ELT)
      GO TO 313
  550 WRITE(6,551) M77, M78                                             159
  551 FORMAT( // 10X,17HRADIC IS NEGATIVE, 5X,5HM77 =,E15.8,5X, 5HM78 =,
     1E15.8 )
  552 IEXIT = 1
      RETURN
  554 WRITE (6,555)                                                     162
  555 FORMAT  ( // 10X,25HSFD OR EBL MUST BE INPUT   // )
```

//ED

40

```
      GO TO 552
412   WRITE (6,413)                                                    164
413   FORMAT (10X,23HTO OR PD MUST BE INPUT     //)
      GO TO 552
600   IF(SFD .EQ. 0.0 ) GO TO 680
      IF( PD .EQ. 0. .OR. TL .EQ. 0. ) GO TO 684
620   M70 = SOL * TAN2A
      M71 = SOF * TAN2A/SFD + (2.*TL*SOL*TAN2A)/(PD*A)
      M72 =(SOF/SFD) * (2.*TL)/(PD*A)
      M73 = SOF/SFD  + (2.*TL * SOL)/(PD*A)
      M74 = SFD/EFT - SOF/EF - (ALFL*DTL - ALFF* DTF)
      IF((SFD/EFT-SOF/EF-SYLT/ELT+SOL/EL) .GE. 0.)GO TO 650
C             PREVIOUS STATEMENT IS AN INITIAL GUESS AT THE PROBABLE
C             LOCATION ON THE STRESS/STRAIN CURVE.
C
C           CONDITION 1
630   M75 = M74 -VL*SOL/EL + M70/EL - (1./(1.-VLT))*  ((1.+VL)*M74 + SOL
     1*(1.-VL**2)/EL + M73/EL*((1.+VLT)*ELT*M74 +ELT*SOL*(1.-VLSQ )/EL))
      M76 = ELT*(1.+VL)*M74*M72/(EL*(1.-VLT)) - (1.+VLT)/ELT + M71/EL +
     1ELT*SOL*(1.- VLSQ)*M72/ (EL**2 * (1.-VLT)) + M73/EL
      ZZ = EL/(M72*(1.0+TAN2A))
      M77 = ZZ*M76
      M78 = ZZ*M75
      RADIC = M77**2 - 4.*M78
      IF(RADIC .LT. 0.) GO TO 550
C       CALL ROOTS TO FIND SMALLEST POSITIVE ROOT.
      CALL ROOTS(M77,RADIC, SBL)                                       180
      SBLH = (1./(1.-VLT))*((1.+VL)*ELT*M74 + ELT*SOL*(1.-VLSQ)/EL - SBL
     1*(1.-VLT))
      IF(SBLH - SYLT .LT. 0.) GO TO 660
      IF(SBL  - SYLT .GE. 0.)GO TO 650
C
C             CONDITION 2
640   M75 = M74 - VL*SOL/EL + M70/EL + (M73*E1-EL)/(EL*(.5+VL))* ((1.+VL
     1)*M74 + SOL*(1.-VLSQ)/EL + SYLT*(VLT/ELT +   .5/E1    - VL/ELT +
     2VL/E1)) - SYLT*(1./ELT - 1./E1)
      M76 =  M72*E1/(EL*(.5+VL)) * ((1.+VL)*M74 + SOL*(1.-VLSQ)/EL +
     1SYLT* (VLT/ELT + .5/E1 - VL/ELT + VL/E1)) + M71/EL - VLT/ELT +
     2(M73*E1 - EL)*((1.-VL*VLT)/(EL*ELT*(.5+VL)))
      ZZ = EL*ELT*(.5+VL)/(M72*(ELT*(.5+VL)*TAN2A+EL*(1.0-VL*VLT)))
```

41

```
      M77 = ZZ * M76
      M78 = ZZ * M75
      RADIC = M77**2 - 4.*M78
      IF(RADIC .LT. 0.) GO TO 550
C        CALL ROOTS TO FIND SMALLEST POSITIVE ROOT.
      CALL ROOTS(M77,RADIC,SBL)                                          192
      SBLH =  E1/(.5+VL) * ((1.+VL)*M74 + SOL*(1.-VLSQ)/EL + SYLT *(VLT/
     1ELT + .5/E1 - VL/ELT + VL/E1) -SBL*(1.-VL*VLT)/EL)
      IF(SBLH -SYLT .LT. 0.) GO TO 630
      IF(SBL - SYLT .LT. 0.) GO TO 660
C
C              CONDITION 3
  650 M75 =  M74 - VL*SOL/EL + M70/EL + (M73*E1-EL)/ (EL*(VL-.5)) * ((1.
     1+VL)*M74 + SOL*(1.-VLSQ)/EL - SYLT*(1.+VL)* ((1.-VLT)/ELT - .5/E1)
     2)  - SYLT* ((1.-VLT)/ELT - .5/E1)
      M76 = M72*E1/(EL*(VL-.5)) * ((1.+VL)*M74 + SOL*(1.-VLSQ)/EL - SYLT
     1*(1.+VL)*((1.-VLT)/ELT - .5/E1))  + M71/EL - .5/E1 + (M73*E1 -EL)*
     2((1.-.5*VL)/(EL*E1*(VL-.5)))
      ZZ = EL*(2.0*VL-1.0)/(M72*(2.0-VL+TAN2A*(2.0*VL-1.0)))
      M77=  ZZ* M76
      M78=  ZZ* M75
      RADIC = M77**2 - 4.*M78
      IF(RADIC .LT. 0.) GO TO 550
C         CALL ROOTS TO FIND SMALLEST POSITIVE ROOT.
      CALL ROOTS(M77,RADIC,SBL)                                          204
      SBLH =  E1/(VL-.5) * ((1.+VL)*M74 + SOL*(1.-VLSQ)/EL - SYLT*(1.+VL
     1)*((1.-VLT)/ELT - .5/E1) - SBL*(1.-.5*VL)/E1 )
      IF(SBLH - SYLT  .LT. 0.) GO TO 630
      IF(SBL - SYLT   .LT. 0.) GO TO 640
  660 SOLH =M70-M71*SBL+TAN2A*M72*SBL**2-M72*SBL*SBLH+M73*SBLH
      GO TO 313
  680 WRITE(6,681)                                                       214
  681 FORMAT(//10X,17HSFD MUST BE INPUT )
      GO TO 552
  684 WRITE(6,685)                                                       216
  685 FORMAT(// 10X,28HBOTH PD AND TL MUST BE INPUT )
      GO TO 552
      END
```

42

```
$IBFTC RNKT     M94,XR7,DECK,LIST
```

42

43

```
      SUBROUTINE RUNKUT
C*****************************************************************
C     THE PURPOSE OF THIS ROUTINE IS TO DETERMINE HEAD CONTOUR PARAMETER
C     BY RUNGE-KUTTA-GILL INTEGRATION OF THE APPLICABLE DIFFERENTIAL
C     EQUATION.
C*****************************************************************
C
      COMMON ABIG,C,XO,A,PD,BIK,TO,TL,SOF,SOL,SFO,SYL,EF,EL,E1,VL,
     XRHOG,RHOL,ISO,KAY,ALFO,PW,SOLR,SOFR,EOL,P,EBL,ETL,SBL,VLEN,TE
     X,TDL,TDF,TR,DELDT,DF1DT,DEFDT,DSYLDT,DNULDT,DSYCDT,ALFL,ALFF,SYLC
     X,TMIN,SOLT,SOFT,SYLT,SYLCT,E1T,ELT,EFT,VLT,C1,C2,C3,XO1,EBLH,SOLH
      REAL KAY
      EQUIVALENCE (BIK,PBIG)
      DIMENSION G(2),RKGA(3),RKGB(3),TIDOT(2),TI(2),PRIOR(7)
      COMMON/RUNGE/TI,PRIOR,QT,Q,Z,U,PHI,ALPHA,THETA,RONE,RTWO,TALF,
     X NSTOP,NIBP,NIBPC,CONA,N,D,DELT,FF,NPREV,JUMP,NI,CTR
      RKGA(1)=C.29289321                                          206 0090
      RKGA(2)=1.7071067                                           206 0100
      RKGA(3)=.16666667                                           206 0110
      RKGB(1)=RKGA(1)                                             206 0120
      RKGB(2)=RKGA(2)                                             206 0130
      RKGB(3)=1.0/3.0                                             206 0140
      IF(JUMP.GE.1) GO TO 9998
 9997 IF(QT)3,2,3                                                 206 0760
    2 U=U+DELT/2.                                                 206 0770
    3 Z=TI(2)                                                     206 0780
      Q=TI(1)                                                     206 0790
      X=A*TI(2)                                                   206 0800
      IF(Q) 15,16,15
   16 PHI = 1.57080
      GO TO 4
   15 PHI= ATAN (-1./Q)                                                   13
    4 TIDOT(2)=Q                                                  206 0810
      SQIRT=SQRT(1.0+Q**2)                                                15
   70 IF(ISO-2)72,71,72                                           206 0820
   72 IF(ABIG*U-C)25,27,25                                        206 0830
   27 THETA = 1.57080
      GO TO 26                                                    206 0860
25    XNUM=SQRT(ABS(Z**2-(U*ABIG+C)**2))                                  23
```

44

```
      THETA=ATAN2(XNUM,(U*ABIG+C))                                      24
26    TALF=(ABIG-Q*COS(THETA))/(SIN(THETA)*SQIRT)                       26    27
      ALPHA=ATAN(TALF)                                                  28
      TIDOT(1) = -(1. +Q**2)/Z *(2.-KAY/(Z*SQIRT) - (1.- KAY/(Z*SQIRT))*
     1TALF**2)
      GOTO73                                                      206 0900
C                    SET THETA TO 90 DEGREES AT INITIAL CONDITIONS FOR
C                    ISOTENSOID.
   71 IF(ABIG*U-C .EQ. 0.0) THETA = 1.57080
      TIDOT(1) = -(1. +Q**2)/Z *(2.-KAY/(Z*SQIRT) - (1.- KAY/(Z*SQIRT))*
     1D**2/(Z**2 - D**2))
73    IF(CTR) 74,9998,9998
74    RTWO=X/SIN(PHI)                                                   36
      TIDOT(1)=(-A*(RTWO**2))/(X**3)
C     RUNGE-KUTTA-GILL INTEGRATION     BY LIONEL HEBERT           206 0960
9998  IF(NIBPC)9996,9995,9996
 9995 NIBPC=NIBP                                                  206 0980
      GO TO 9999                                                  206 0990
 9996 IF(CONA)9994,9993,9994                                      206 1000
 9993 DO 9992  I=1,N                                              206 1010
      G(I)=TIDOT(I)*DELT                                          206 1020
 9992 TI(I)=TI(I)+G(I)*0.5                                        206 1030
      CONA=1.0                                                    206 1040
      KUTTA=+2                                                    206 1050
 9991 QT=0.0                                                      206 1060
      GO TO 9997                                                  206 1070
 9994 K=3-KUTTA                                                   206 1080
      DO 9990 I=1,N                                               206 1090
      TI(I)=TI(I)+TIDOT(I)*DELT*RKGA(K)-RKGB(K)*G(I)              206 1100
      IF(KUTTA)9989,9990,9989                                     206 1110
 9989 G(I)=G(I)+3.0*(TIDOT(I)*DELT*RKGA(K)-RKGB(K)*G(I))-RKGA(K)*TIDOT(I206 1120
     1)*DELT                                                      206 1130
 9990 CONTINUE                                                    206 1140
      IF(KUTTA)9986,9987,9986                                     206 1150
 9986 KUTTA=KUTTA-1                                               206 1160
      IF(KUTTA)9985,9991,9985                                     206 1170
 9987 CONA=0.0                                                    206 1180
      NIBPC=NIBPC-1                                               206 1190
 9985 QT=1.0                                                      206 1200
      GO TO 9997                                                  206 1210
```

45

```
 9999 IF(ABS (TI(2)-PRIOR(2))-.03*FF)420,50,50                    206 1
   50 U=U-DELT*FF                                                 206 1230
      DELT=DELT/2.0                                               206 1240
      TI(1)=PRIOR(1)                                              206 1250
      TI(2)=PRIOR(2)                                              206 1260
      QT=1.0                                                      206 1270
      GO TO 9997                                                  206 1280
  420 CONTINUE
      TA=A*TI(2)
      IF(TIDOT(1))421,422,423                                     206 1290
  423 IF(NI)425,424,425                                           206 1300
  425 UL=U                                                        206 1310
      U=U-FF*DELT                                                 206 1320
      TI(1)=PRQ                                                   206 1330
      TI(2)=PRZ                                                   206 1340
      DELT=0.10*DELT                                              206 1350
      QT=1.0                                                      206 1360
      GO TO 427                                                   206 1370
  424 NI=1                                                        206 1380
      DEL=DELT                                                    206 1390
      UL=U                                                        206 1400
      UR=PRIOR(5)                                                 206 1410
      U=UR                                                        206 1420
      DELT=0.10*DELT                                              206 1430
      TI(1)=PRIOR(1)                                              206 1440
      TI(2)=PRIOR(2)                                              206 1450
      PRQ=TI(1)                                                   206 1460
      PRZ=TI(2)                                                   206 1470
      QT=1.0                                                      206 1480
      GO TO 9997                                                  206 1490
  421 IF(NI)426,59,426                                            206 1500
  426 UR=U                                                        206 1510
      PRQ=TI(1)                                                   206 1520
      PRZ=TI(2)                                                   206 1530
  427 IF(ABS (UL-UR)-.2E-06)697,697,9997                          206 1540
  422 IF(NI)697,59,697                                            206 1550
  697 CTR=-1.0
      NI=0                                                        206 1570
      DELT=DEL                                                    206 1580
   59 IF(ISO.EQ.1) GO TO 56
```

```
64      ALPHA=ATAN(D/SQRT(ABS(Z**2-D**2)))                          115   116
17      TALF=SIN(ALPHA)/COS(ALPHA)                                  118   119
   56   IF(Z)600,600,692
692     IF(ISO-2) 693,694,693
  693   IF(Z-(ABIG*U+C))600,600,685                       206 1850
  694   IF(Z-D)600,600,685
  600   NSTOP=(+1)                                        206 1860
685     RTWO=X/SIN (PHI)                                            130
        IF(CTR)4685,4686,4686                             206 2030
 4685   RONE=RTWO                                         206 2040
        GO TO 4687                                        206 2050
 4686   RONE=A*((1.+0**2)**1.5)/ABS (TIDOT(1))                      135
 4687   CONTINUE
        RETURN
        END
```

46

47

```
$IBFTC LPF      M94,XR7,DECK
```

48

```
      SUBROUTINE STRESS(SYL,E1,EL,E,SL)
      EYL=SYL/EL
      TEST1=E
      IF(TEST1.GT.EYL) GO TO 4
      SL=EL*TEST1
      GO TO 5
4     SL=SYL+E1*(TEST1-EYL)
5     RETURN
      END
```

ASSEMBLED TEXT.

49

```
$TEXT  TSTO                                                                    TSTO0001

                                  *      THIS ROUTINE TESTS AN INPUT VARIABLE FOR BLANK,ZERO, OR NONZERO
                                  *      CONDITION. VALIDITY DEPENDS ON FORTRAN IV STORAGE OF (-0) FOR
                                  *      ALL INPUT FIELDS LEFT BLANK.
                                  *              USAGE...  CALL TESTO(VAR,K)   (REAL VARIABLE) OR
                                  *                        CALL TESTO(NVAR,K)  (INTEGER VARIABLE)
                                  *                           K IS RETURNED AS (1) FOR BLANK INPUT  AND
                                  *                              (0) FOR ZERO OR NONZERO INPUT.
                                         ENTRY   TESTO

BINARY CARD ID. TSTO0002
      00000  0500 60 4 00003  10000  TESTO  CLA*    3,4      LOAD INPUT VARIABLE
      00001  4100 00 0 00003  10001         TNZ     SETO
      00002  4120 00 0 00006  10001         TMI     SET1
      00003  0500 00 0 00011  10001  SETO   CLA     =0       SET AC TO 0 IF ZERO OR NONZERO
      00004  0601 60 4 00004  10000         STO*    4,4
      00005  0020 00 4 00001  10000         TRA     1,4      RETURN
      00006  0500 00 0 00012  10001  SET1   CLA     =1       SET AC TO DEC 1 IF (-0)
      00007  0601 60 4 00004  10000         STO*    4,4
      00010  0020 00 4 00001  10000         TRA     1,4      RETURN
      00011  000000000000     10000         *LORG
      00012  000000000001     10000
                      00000  01111         END
```

$IBFTC FNC M94,XR7,DECK

50

129

51

4

```
      SUBROUTINE EXITO(IRCASE)
    5 IF(IRCASE.NE.0) RETURN
    8 READ (5,10) ISCN
   10 FORMAT(78X,I2)
      IF(ISCN .EQ. -1) RETURN
      GO TO 8
      END
```

130

52

$IBFTC STRA M94,DECK

53

```
      SUBROUTINE STRAIN (SYL,SYLH,E1,EL,SL,SLH,ALDTL,VL,EPOL,EPOLH,EPL,
     1EPLH,DSYL,DSYLH,DEOL,DEOLH,DEL,DELH)
C*********************************************************************
C     THE PURPOSE OF THIS ROUTINE IS TO DETERMINE METAL SHELL BIAXIAL
C     STRAIN FOR ANY STRESS LEVEL. FOUR PATHS ARE AVAILABLE WHICH COVER
C     THE TOTAL ELASTO/PLASTIC RANGE.
C*********************************************************************
C
      IF (SLH-SYLH.LE.0.0) GO TO 10
      IF (SL-SYL.GT.0.0) GO TO 8
C
 6    EPL = SL/EL - SLH/(2.0*E1) +(1.0/(2.0*E1)- VL/EL)*SYLH + ALDTL
     1 - EPOL     +DEOL
      EPLH = SLH/E1 - VL*SL/EL +(1.0/EL- 1.0/E1)*SYLH + ALDTL - EPOLH
     1 + DEOLH
      DSYL = 0.0
      DSYLH = SLH-SYLH
      DEL = DSYLH*(VL/EL - .5/E1) + DEOL
      DELH=  DSYLH* (1./E1 -1./EL) + DEOLH
      GO TO 100
C
    8 EPL =SL/E1-SLH/(2.*E1)+(1.0/EL - 1.0/E1)*SYL + (1.0/(2.0*E1)-VL/EL
     1)*SYLH + ALDTL- EPOL  + DEOL
      EPLH = SLH/E1 - SL/(2.0*E1) +(1.0/EL - 1.0/E1)*SYLH + (1.0/(2.*E1)
     1- VL/EL) * SYL + ALDTL - EPOLH  + DEOLH
      DSYL = SL-SYL
      DSYLH = SLH - SYLH
      DEL = DSYL*(1./E1 - 1./EL) + DSYLH*(VL/EL - .5/E1) + DEOL
      DELH = DSYLH *(1./E1 - 1./EL) + DSYL*(VL/EL - .5/E1) + DEOLH
      GO TO 100
C
   10 IF(SL - SYL .GT. 0.) GO TO 12
      EPL = (SL-VL*SLH)/EL + ALDTL  - EPOL + DEOL
      EPLH = (SLH-VL*SL)/EL + ALDTL - EPOLH + DEOLH
      DSYL = 0.0
      DSYLH = 0.0
      DEL = DEOL
      DELH = DEOLH
      GO TO 100
```

```
C
   12 EPL = SL/E1 -VL*SLH/EL + (1./EL - 1./E1)*SYL + ALDTL - EPOL + DEOL
      EPLH = SLH/EL - .5*SL/E1 + (.5/E1 -VL/EL)*SYL + ALDTL-EPOLH +DEOLH
      DSYL = SL - SYL
      DSYLH = 0.0
      DEL = (1./E1 - 1./EL)*DSYL + DEOL
      DELH = DSYL*(VL/EL - .5/E1) + DEOLH
  100 RETURN
      END
```

54

133

55

```
$IBFTC ROOT     M94,XR7,DECK
```

131

56

```
      SUBROUTINE  ROOTS(M77,RADIC,SBL)
CALCULATE THE SMALLEST POSITIVE ROOT FROM EQTN. SBL=(M77+OR-SQRT(M77**2-
C         4.*M78)/2.
      REAL M77
      ROOT1 = (M77 + SQRT(RADIC ))/2.                                    2
      ROOT2 = (M77 - SQRT(RADIC ))/2.                                    3
      SBL = AMIN1(ROOT1,ROOT2)
      IF(SBL .GT. 0.) RETURN
      IF(SBL .EQ. ROOT1) GO TO 50
      IF(ROOT1 .LT. 0.) GO TO 100
      SBL = ROOT1
   10 RETURN
   50 IF(ROOT2 .LT. 0.) GO TO 100
      SBL = ROOT2
      GO TO 10
  100 WRITE(6,105) RADIC,M77                                             17
  105 FORMAT(// 10X, 6HCKIN--,5X,29HNO REAL,POSITIVE ROOT EXISTS.,5X,
     1 6HRADIC=,E15.8,5X,4HM77=,E15.8 )
      CALL EXIT                                                          18
      RETURN
      END
```

135

APPENDIX C

SAMPLE PROBLEMS

C-1-a

FILAMENT REINFORCED METAL-SHELL PRESSURE VESSELS

AEROJET GENERAL CORP., VON KARMAN CENTER (1)

BASIC INPUT

TITLE CARD

SAMPLE CASE NØ. 1, INCØNEL METAL-SHELL

VLEN	A	XØ1	XØ2	C	
16.	10.	2.	2.		
RHØL	ALFL	SYL	DSYLDT	SYLC	DSYLCDT
.3	4.99 -06	1.18 +05	-60.1	1.08 +05	-54.2
EL	DELDT	EI	DEIDT	VL	DNULDT
3.1 +07	-2010.	7.96 +05	0.0	.29	0.0
RHØG	ALFF	EF	DEFDT	BIK	
.072	2.01 -06	1.24 +07	-2410.	.673	
PD	SØF	SØL	TR	TDF	TDL
4445.	4.7 +04	0.0	75.	-320.	-320.
TØ	SFD	EBLH	TL	SØLH	CYLN
	4.95 +05		.060	0.0	
EBL					

IRCASE

(8)

SERVICE CYCLE INPUT

(2)

SERVICE CYCLE CONTROL FLAG →

P_N	T_{NL}	T_{NF}		
0.0	75.	75.		1
1000.				
2000.				
3000.				
4000.				
4445.				
0.0	75.	75.		
0.0	75.	75.		1
0.0	-320.	-320.		
1000.				
2000.				
3000.				
4000.				
4445.				
0.0	-320.	-320.		
0.0	75.	75.		-1

FLAG = 1 — Initializes to design conditions. Use at <u>start</u> of <u>each</u> service-cycle.

FLAG = 0 (or blank) — Uses conditions set at previous pass through service-cycle. Use for cards following the first card (where FLAG = 1).

FLAG = -1 — Causes transfer to main program where a new design case is read in. Use for <u>very</u> <u>last</u> card of service-cycle data only.

SAMPLE CASE NO. 3 INCONEL METAL-SHELL
INPUT

VLEN	A	XO1	XO2	C	
16.000	10.0000	2.000	2.000	-0.00000	
RHOL	ALFL	SYL	DSYLDT	SYLC	DSYCDT
0.300	0.00000499	118000.0	-60.1	108000.0	-54.2
EL	DELDT	E1	DE1DT	VL	DNULDT
3.1000000E 07	-2010.0	7.9600000E 05	0.0	0.29000	0.0000000
RHO G	ALPHA F	EF	DEFDT	K	
0.07200	2.0100000E-06	1.2400000E 07	-2410.0	0.67300	
PD	SOF	SOL	TR	TDF	TDL
4445.0	4.7000000E 04	0.0000000E-39	75.00	-320.00	-320.00
TO	SFD	FBLH	TL	SOLH	CYLN
-0.00000	4.9500000E 05	-0.0000000E-39	0.0600	0.0000000E-39	-0.00
EBL					
-0.0000000E-39					

SAMPLE CASE NO. 1, INCONEL METAL-SHELL
RIGID MANDREL WINDING PRESSURE IS FICTICIOUS

4

40

SAMPLE CASE NO. INCONEL METAL-SHELL

DESIGN DATA AT THE EQUATOR

5

EFT =	0.13351950E 08	SYLCT=	0.12940900E 06
ELT =	0.31793950E 08	TL =	0.60000000E-01
E1T =	0.79600000E 06	PD =	0.44450000E 04
VLT =	0.29000000E 00	SOF =	0.47000000E 05
SYLT =	0.14173950E 06	SFD =	0.49500000E 06

	HEAD NO. 1	HEAD NO. 2
TO =	0.33555441E-01	0.33555441E-01
TE =	0.21679499E-01	0.21679499E-01
PW =	0.20378729E 03	0.20378729E 03
SOL =	0.00000000E-38	0.00000000E-38
SOLH =	0.00000000E-38	0.00000000E-38
SOLP =	-0.14860447E 05	-0.14860447E 05
SOLHP=	-0.61918524E 03	-0.61918524E 03
SOFP =	0.41127647E 05	0.41127647E 05
SOLT =	-0.10963692E 05	-0.10963692E 05
SOLHT=	-0.45682047E 03	-0.45682047E 03
SOFT =	0.30343021E 05	0.30343021E 05
SBL =	0.19156079E 06	0.19156079E 06
SBLH =	0.19156079E 06	0.19156079E 06
K =	0.51714951E 00	0.51714951E 00

141

SAMPLE CASE NO. 1, INCONEL METAL-SHELL

6

DESIGN DATA FOR GEODESIC ISOTENSOID CONTOUR

CONTOUR INPUT DATA ABIG = 0.250000 C = -0.000000 V LEN = 16.000000

	1	2	3	4	5	6
Z	0.10000000E 01	0.99992684E 00	0.99970735E 00	0.99934140E 00	0.99882879E 00	0.99816920E 00
U	0.00000000E-38	0.10000000E-01	0.20000000E-01	0.30000000E-01	0.40000000E-01	0.49999999E-01
PHI	0.90000243E 02	0.89161924E 02	0.88323680E 02	0.87485158E 02	0.86646220E 02	0.85806726E 02
ALPHA	0.11536963E 02	0.11537819E 02	0.11540387E 02	0.11544671E 02	0.11550677E 02	0.11558415E 02
THETA	0.90000243E 02	0.89883270E 02	0.89766230E 02	0.89649060E 02	0.89531701E 02	0.89414092E 02
R ONE	0.68365237E 01	0.68366910E 01	0.68371930E 01	0.68380308E 01	0.68392057E 01	0.68407195E 01
R TWO	0.10000000E 02	0.10000338E 02	0.10001354E 02	0.10003048E 02	0.10005424E 02	0.10008484E 02
T	0.33555441E-01	0.33557998E-01	0.33565673E-01	0.33578476E-01	0.33596429E-01	0.33619558E-01
X	0.10000000E 02	0.99992684E 01	0.99970734E 01	0.99934139E 01	0.99882878E 01	0.99816920E 01
Y	0.00000000E-38	0.10000000E 00	0.20000000E 00	0.30000000E 00	0.39999999E 00	0.49999999E 00
XFO	0.10002079E 02	0.10016046E 02	0.10013849E 02	0.10010187E 02	0.10005057E 02	0.99984567E 01
YFO	0.16648445E-01	0.10024543E 00	0.20049096E 00	0.30073668E 00	0.40098272E 00	0.50122914E 00
XFI	0.99979212E 01	0.99824911E 01	0.99802977E 01	0.99766408E 01	0.99715183E 01	0.99649271E 01
YFI	-0.16648445E-01	0.99754569E-01	0.19950904E 00	0.29926331E 00	0.39901727E 00	0.49877083E 00
XM	0.99904872E 01	0.99224975E 01	0.99203234E 01	0.99166986E 01	0.99116211E 01	0.99050877E 01
YM	-0.76186135E-01	0.98876934E-01	0.19775382E 00	0.29663058E 00	0.39550717E 00	0.49438353E 00
SOL	0.00000000E-38	0.00000000E-38	0.00000000E-38	0.00000000E-38	0.00000000E-38	0.00000000E-38
SOLH	0.00000000E-38	0.00000000E-38	0.00000000E-38	0.00000000E-38	0.00000000E-38	0.00000000E-38
SOF	0.47000000E 05	0.47000000E 05	0.47000000E 05	0.47000000E 05	0.47000000E 05	0.47000000E 05
EOL	0.00000000E-38	0.00000000E-38	0.00000000E-38	0.00000000E-38	0.00000000E-38	0.00000000E-38
EOLH	0.00000000E-38	0.00000000E-38	0.00000000E-38	0.00000000E-38	0.00000000E-38	0.00000000E-38
EOF	0.37903226E-02	0.37903226E-02	0.37903226E-02	0.37903226E-02	0.37903226E-02	0.37903226E-02
SOLP	-0.14860463E 05	-0.14861378E 05	-0.14864124E 05	-0.14868706E 05	-0.14875128E 05	-0.14883399E 05
SOLHP	-0.61916505E 03	-0.61929758E 03	-0.61969538E 03	-0.62035938E 03	-0.62129114E 03	-0.62249281E 03
SOFP	0.41127638E 05	0.41127287E 05	0.41126234E 05	0.41124479E 05	0.41122019E 05	0.41118849E 05
EOLP	-0.47357758E-03	-0.47360586E-03	-0.47369073E-03	-0.47383230E-03	-0.47403074E-03	-0.47428633E-03
EOLHP	0.11904417E-03	0.11904845E-03	0.11906131E-03	0.11908275E-03	0.11911277E-03	0.11915138E-03
EOFP	0.33167450E-02	0.33167167E-02	0.33166318E-02	0.33164903E-02	0.33162918E-02	0.33160362E-02
SOLT	-0.10963704E 05	-0.10964375E 05	-0.10966389E 05	-0.10969749E 05	-0.10974458E 05	-0.10980524E 05
SOLHT	-0.45680557E 03	-0.45690318E 03	-0.45719617E 03	-0.45768520E 03	-0.45837143E 03	-0.45925646E 03
SOFT	0.30343015E 05	0.30342745E 05	0.30341935E 05	0.30340583E 05	0.30338689E 05	0.30336250E 05
EOLT	-0.23117195E-02	-0.23117397E-02	-0.23118004E-02	-0.23119016E-02	-0.23120435E-02	-0.23122262E-02
EOLHT	-0.18854152E-02	-0.18854121E-02	-0.18854030E-02	-0.18853877E-02	-0.18853663E-02	-0.18853388E-02
EOFT	0.14786030E-02	0.14785828E-02	0.14785221E-02	0.14784209E-02	0.14782791E-02	0.14780963E-02
SBL	0.19156088E 06	0.19156088E 06	0.19156087E 06	0.19156087E 06	0.19156087E 06	0.19156087E 06
SBLH	0.19156105E 06	0.19156106E 06	0.19156105E 06	0.19156105E 06	0.19156106E 06	0.19156106E 06
SFD	0.49499912E 06	0.49499908E 06	0.49499905E 06	0.49499901E 06	0.49499898E 06	0.49499895E 06
EDL	0.32488907E-01	0.32488900E-01	0.32488901E-01	0.32488897E-01	0.32488890E-01	0.32488890E-01
EDLH	0.32489228E-01	0.32489241E-01	0.32489231E-01	0.32489238E-01	0.32489250E-01	0.32489245E-01
EFD	0.36279220E-01	0.36279217E-01	0.36279215E-01	0.36279212E-01	0.36279209E-01	0.36279208E-01

M2

SAMPLE CASE NO. INCONEL METAL-SHELL

DESIGN DATA FOR GEODESIC ISOTENSOID CONTOUR

CONTOUR INPUT DATA ABIG = 0.250000 C = -0.000000 V LEN = 16.000000

	7	8	9	10	11	12
Z	0.99736224E 00	0.99640743E 00	0.99530417E 00	0.99405183E 00	0.99264961E 00	0.99109668E 00
U	0.59999999E-01	0.69999998E-01	0.79999998E-01	0.89999998E-01	0.99999998E-01	0.11000000E 00
PHI	0.84966537E 02	0.84125510E 02	0.83283504E 02	0.82440373E 02	0.81595973E 02	0.80750154E 02
ALPHA	0.11567896E 02	0.11579134E 02	0.11592147E 02	0.11606955E 02	0.11623579E 02	0.11642047E 02
THETA	0.89296171E 02	0.89177876E 02	0.89059142E 02	0.88939907E 02	0.88820103E 02	0.88699661E 02
R ONE	0.68425744E 01	0.68447738E 01	0.68473210E 01	0.68502200E 01	0.68534758E 01	0.68570936E 01
R TWO	0.10012234E 02	0.10016677E 02	0.10021822E 02	0.10027675E 02	0.10034244E 02	0.10041540E 02
T	0.33647898E-01	0.33681495E-01	0.33720399E-01	0.33764672E-01	0.33814386E-01	0.33869616E-01
X	0.99736223E 01	0.99640743E 01	0.99530417E 01	0.99405183E 01	0.99264960E 01	0.99109668E 01
Y	0.59999999E 00	0.69999998E 00	0.79999998E 00	0.89999998E 00	0.99999998E 00	0.11000000E 01
XFO	0.99903814E 01	0.99808265E 01	0.99697860E 01	0.99572538E 01	0.99432216E 01	0.99276813E 01
YFO	0.60147608E 00	0.70172363E 00	0.80197190E 00	0.90222099E 00	0.10024710E 01	0.11027221E 01
XFI	0.99568632E 01	0.99473219E 01	0.99362972E 01	0.99237826E 01	0.99097704E 01	0.98942521E 01
YFI	0.59852389E 00	0.69827633E 00	0.79802806E 00	0.89777896E 00	0.99752893E 00	0.10972778E 01
XM	0.98970946E 01	0.98876370E 01	0.98767089E 01	0.98643041E 01	0.98504146E 01	0.98350323E 01
YM	0.59325960E 00	0.69213531E 00	0.79101063E 00	0.88988546E 00	0.98875975E 00	0.10876334E 01
SOL	0.00000000E-38	0.00000000E-38	0.00000000E-38	0.00000000E-38	0.00000000E-38	0.00000000E-38
SOLH	0.00000000E-38	0.00000000E-38	0.00000000E-38	0.00000000E-38	0.00000000E-38	0.00000000E-38
SOF	0.47000000E 05	0.47000000E 05	0.47000000E 05	0.47000000E 05	0.47000000E 05	0.47000000E 05
EOL	0.00000000E-38	0.00000000E-38	0.00000000E-38	0.00000000E-38	0.00000000E-38	0.00000000E-38
EOLH	0.00000000E-38	0.00000000E-38	0.00000000E-38	0.00000000E-38	0.00000000E-38	0.00000000E-38
EOF	0.37903226E-02	0.37903226E-02	0.37903226E-02	0.37903226E-02	0.37903226E-02	0.37903226E-02
SOLP	-0.14893531E 05	-0.14905536E 05	-0.14919432E 05	-0.14935236E 05	-0.14952970E 05	-0.14972659E 05
SOLHP	-0.62396722E 03	-0.62571783E 03	-0.62774884E 03	-0.63006505E 03	-0.63267210E 03	-0.63557628E 03
SOFP	0.41114967E 05	0.41110369E 05	0.41105046E 05	0.41098993E 05	0.41092202E 05	0.41084663E 05
EOLP	-0.47459936E-03	-0.47497026E-03	-0.47539951E-03	-0.47588765E-03	-0.47643534E-03	-0.47704328E-03
EOLHP	0.11919860E-03	0.11925444E-03	0.11931892E-03	0.11939204E-03	0.11947385E-03	0.11956435E-03
EOFP	0.33157232E-02	0.33153523E-02	0.33149230E-02	0.33144349E-02	0.33138872E-02	0.33132793E-02
SOLT	-0.10987954E 05	-0.10996758E 05	-0.11006948E 05	-0.11018537E 05	-0.11031542E 05	-0.11045979E 05
SOLHT	-0.46034235E 03	-0.46163165E 03	-0.46312746E 03	-0.46483331E 03	-0.46675331E 03	-0.46889215E 03
SOFT	0.30333261E 05	0.30329721E 05	0.30325625E 05	0.30320965E 05	0.30315738E 05	0.30309935E 05
EOLT	-0.23124500E-02	-0.23127151E-02	-0.23130220E-02	-0.23133709E-02	-0.23137624E-02	-0.23141970E-02
EOLHT	-0.18853052E-02	-0.18852655E-02	-0.18852196E-02	-0.18851675E-02	-0.18851093E-02	-0.18850449E-02
EOFT	0.14778726E-02	0.14776074E-02	0.14773006E-02	0.14769516E-02	0.14765601E-02	0.14761255E-02
SBL	0.19156086E 06	0.19156086E 06	0.19156086E 06	0.19156086E 06	0.19156086E 06	0.19156086E 06
SBLH	0.19156105E 06	0.19156105E 06	0.19156105E 06	0.19156105E 06	0.19156107E 06	0.19156106E 06
SFD	0.49499893E 06	0.49499890E 06	0.49499886E 06	0.49499884E 06	0.49499875E 06	0.49499873E 06
EDL	0.32488888E-01	0.32488889E-01	0.32488882E-01	0.32488879E-01	0.32488875E-01	0.32488876E-01
EDLH	0.32489237E-01	0.32489236E-01	0.32489245E-01	0.32489245E-01	0.32489263E-01	0.32489259E-01
EFD	0.36279206E-01	0.36279204E-01	0.36279201E-01	0.36279199E-01	0.36279193E-01	0.36279191E-01

143

SAMPLE CASE NO. 1, INCONEL METAL-SHELL

8

DESIGN DATA FOR GEODESIC ISOTENSOID CONTOUR

ABIG = 0.250000 C = -0.000000 V LEN = 16.000000

CONTOUR INPUT DATA

	13	14	15	16	17	18
Z	0.98939205E 00	0.98753469E 00	0.98552340E 00	0.98335692E 00	0.98103387E 00	0.97855270E 00
U	0.12000000E 00	0.13000000E 00	0.14000000E 00	0.14999999E 00	0.15999999E 00	0.16999999E 00
PHI	0.79902767E 02	0.79053659E 02	0.78202676E 02	0.77349658E 02	0.76494445E 02	0.75636871E 02
ALPHA	0.11662386E 02	0.11684630E 02	0.11708813E 02	0.11734976E 02	0.11763161E 02	0.11793415E 02
THETA	0.88578514E 02	0.88456591E 02	0.88333817E 02	0.88210116E 02	0.88085410E 02	0.87959618E 02
R ONE	0.68610792E 01	0.68654400E 01	0.68701825E 01	0.68753153E 01	0.68808475E 01	0.68867885E 01
R TWO	0.10049573E 02	0.10058355E 02	0.10067900E 02	0.10078222E 02	0.10089337E 02	0.10101263E 02
T	0.33930454E-01	0.33996997E-01	0.34069356E-01	0.34147651E-01	0.34232014E-01	0.34322590E-01
X	0.98939204E 01	0.98753468E 01	0.98552340E 01	0.98335692E 01	0.98103386E 01	0.97855270E 01
Y	0.12000000E 01	0.13000000E 01	0.13999999E 01	0.14999999E 01	0.15999999E 01	0.16999999E 01
XFO	0.99106228E 01	0.98920360E 01	0.98719088E 01	0.98502284E 01	0.98269813E 01	0.98021518E 01
YFO	0.12029743E 01	0.13032278E 01	0.14034827E 01	0.15037391E 01	0.16039972E 01	0.17042570E 01
XFI	0.98772179E 01	0.98586575E 01	0.98385592E 01	0.98169098E 01	0.97936958E 01	0.97689021E 01
YFI	0.11970256E 01	0.12967721E 01	0.13965172E 01	0.14962607E 01	0.15960026E 01	0.16957427E 01
XM	0.98181472E 01	0.97997491E 01	0.97798265E 01	0.97583662E 01	0.97353550E 01	0.97107775E 01
YM	0.11865065E 01	0.12853787E 01	0.13842501E 01	0.14831207E 01	0.15819902E 01	0.16808587E 01
SOL	0.00000000E-38	0.00000000E-38	0.00000000E-38	0.00000000E-38	0.00000000E-38	0.00000000E-38
SOLH	0.00000000E-38	0.00000000E-38	0.00000000E-38	0.00000000E-38	0.00000000E-38	0.00000000E-38
SOF	0.47000000E 05	0.47000000E 05	0.47000000E 05	0.47000000E 05	0.47000000E 05	0.47000000E 05
EOL	0.00000000E-38	0.00000000E-38	0.00000000E-38	0.00000000E-38	0.00000000E-38	0.00000000E-38
EOLH	0.00000000E-38	0.00000000E-38	0.00000000E-38	0.00000000E-38	0.00000000E-38	0.00000000E-38
EOF	0.37903226E-02	0.37903226E-02	0.37903226E-02	0.37903226E-02	0.37903226E-02	0.37903226E-02
SOLP	-0.14994329E 05	-0.15018011E 05	-0.15043738E 05	-0.15071547E 05	-0.15101477E 05	-0.15133573E 05
SOLHP	-0.63878481E 03	-0.64230566E 03	-0.64614773E 03	-0.65032086E 03	-0.65483597E 03	-0.65970500E 03
SOFP	0.41076367E 05	0.41067303E 05	0.41057458E 05	0.41046818E 05	0.41035370E 05	0.41023096E 05
EOLP	-0.47771231E-03	-0.47844331E-03	-0.47923726E-03	-0.48009527E-03	-0.48101854E-03	-0.48200834E-03
EOLHP	0.11966357E-03	0.11977153E-03	0.11988827E-03	0.12001379E-03	0.12014814E-03	0.12029133E-03
EOFP	0.33126102E-02	0.33118793E-02	0.33110853E-02	0.33102272E-02	0.33093040E-02	0.33083142E-02
SOLT	-0.11061869E 05	-0.11079234E 05	-0.11098099E 05	-0.11118489E 05	-0.11140435E 05	-0.11163967E 05
SOLHT	-0.47125510E 03	-0.47384802E 03	-0.47667747E 03	-0.47975072E 03	-0.48307574E 03	-0.48666135E 03
SOFT	0.30303550E 05	0.30296573E 05	0.30288996E 05	0.30280807E 05	0.30271996E 05	0.30262550E 05
EOLT	-0.23146753E-02	-0.23151978E-02	-0.23157653E-02	-0.23163786E-02	-0.23170385E-02	-0.23177460E-02
EOLHT	-0.18849743E-02	-0.18848974E-02	-0.18848144E-02	-0.18847250E-02	-0.18846294E-02	-0.18845276E-02
EOFT	0.14756473E-02	0.14751248E-02	0.14745573E-02	0.14739440E-02	0.14732841E-02	0.14725766E-02
SBL	0.19156085E 06	0.19156086E 06	0.19156085E 06	0.19156085E 06	0.19156085E 06	0.19156085E 06
SBLH	0.19156105E 06	0.19156108E 06	0.19156106E 06	0.19156107E 06	0.19156107E 06	0.19156106E 06
SFD	0.49499870E 06	0.49499863E 06	0.49499861E 06	0.49499855E 06	0.49499850E 06	0.49499847E 06
EDL	0.32488870E-01	0.32488867E-01	0.32488867E-01	0.32488862E-01	0.32488855E-01	0.32488856E-01
EDLH	0.32489250E-01	0.32489275E-01	0.32489263E-01	0.32489267E-01	0.32489276E-01	0.32489267E-01
EFD	0.36279188E-01	0.36279183E-01	0.36279182E-01	0.36279177E-01	0.36279174E-01	0.36279171E-01

144

SAMPLE CASE NO. INCONEL METAL-SHELL

9

DESIGN DATA FOR GEODESIC ISOTENSOID CONTOUR

CONTOUR INPUT DATA ABIG = 0.250000 C = -0.000000 V LEN = 16.000000

	19	20	21	22	23	24
Z	0.97591182E 00	0.97310945E 00	0.97014368E 00	0.96701249E 00	0.96371368E 00	0.96024491E 00
U	0.17999999E 00	0.18999998E 00	0.19999998E 00	0.20999998E 00	0.21999998E 00	0.22999998E 00
PHI	0.74776768E 02	0.73913960E 02	0.73048273E 02	0.72179521E 02	0.71307516E 02	0.70432064E 02
ALPHA	0.11825789E 02	0.11860339E 02	0.11897126E 02	0.11936215E 02	0.11977678E 02	0.12021591E 02
THETA	0.87832653E 02	0.87704430E 02	0.87574852E 02	0.87443824E 02	0.87311244E 02	0.87177006E 02
R ONE	0.68931495E 01	0.68999416E 01	0.69071775E 01	0.69148710E 01	0.69230371E 01	0.69316915E 01
R TWO	0.10114019E 02	0.10127626E 02	0.10142105E 02	0.10157481E 02	0.10173782E 02	0.10191033E 02
T	0.34419535E-01	0.34523022E-01	0.34633237E-01	0.34750382E-01	0.34874678E-01	0.35006361E-01
X	0.97591181E 01	0.97310944E 01	0.97014368E 01	0.96701248E 01	0.96371368E 01	0.96024491E 01
Y	0.17999999E 01	0.18999998E 01	0.19999998E 01	0.20999998E 01	0.21999998E 01	0.22999997E 01
XFO	0.97757239E 01	0.97476799E 01	0.97180009E 01	0.96866663E 01	0.96536543E 01	0.96189413E 01
YFO	0.18045188E 01	0.19047827E 01	0.20050488E 01	0.21053172E 01	0.22055883E 01	0.23058620E 01
XFI	0.97425121E 01	0.97145087E 01	0.96848725E 01	0.96535832E 01	0.96206192E 01	0.95859567E 01
YFI	0.17954809E 01	0.18952170E 01	0.19949509E 01	0.20946823E 01	0.21944113E 01	0.22941375E 01
XM	0.96846175E 01	0.96568578E 01	0.96274794E 01	0.95964620E 01	0.95637841E 01	0.95294220E 01
YM	0.17797260E 01	0.18785921E 01	0.19774569E 01	0.20763202E 01	0.21751819E 01	0.22740420E 01
SOL	0.00000000E-38	0.00000000E-38	0.00000000E-38	0.00000000E-38	0.00000000E-38	0.00000000E-38
SOLH	0.00000000E-38	0.00000000E-38	0.00000000E-38	0.00000000E-38	0.00000000E-38	0.00000000E-38
SOF	0.47000000E 05	0.47000000E 05	0.47000000E 05	0.47000000E 05	0.47000000E 05	0.47000000E 05
EOL	0.00000000E-38	0.00000000E-38	0.00000000E-38	0.00000000E-38	0.00000000E-38	0.00000000E-38
EOLH	0.00000000E-38	0.00000000E-38	0.00000000E-38	0.00000000E-38	0.00000000E-38	0.00000000E-38
EOF	0.37903226E-02	0.37903226E-02	0.37903226E-02	0.37903226E-02	0.37903226E-02	0.37903226E-02
SOLP	-0.15167882E 05	-0.15204456E 05	-0.15243349E 05	-0.15284624E 05	-0.15328345E 05	-0.15374583E 05
SOLHP	-0.66494104E 03	-0.67055851E 03	-0.67657315E 03	-0.68300224E 03	-0.68986461E 03	-0.69718087E 03
SOFP	0.41009980E 05	0.40996002E 05	0.40981143E 05	0.40965378E 05	0.40948687E 05	0.40931040E 05
EOLP	-0.48306609E-03	-0.48419334E-03	-0.48539171E-03	-0.48666301E-03	-0.48800918E-03	-0.48943228E-03
EOLHP	0.12044338E-03	0.12060431E-03	0.12077413E-03	0.12095286E-03	0.12114050E-03	0.12133704E-03
EOFP	0.33072564E-02	0.33061292E-02	0.33049308E-02	0.33036595E-02	0.33023134E-02	0.33008903E-02
SOLT	-0.11189122E 05	-0.11215937E 05	-0.11244451E 05	-0.11274711E 05	-0.11306762E 05	-0.11340658E 05
SOLHT	-0.49051717E 03	-0.49465380E 03	-0.49908282E 03	-0.50381695E 03	-0.50887001E 03	-0.51425719E 03
SOFT	0.30252456E 05	0.30241698E 05	0.30230263E 05	0.30218132E 05	0.30205287E 05	0.30191709E 05
EOLT	-0.23185020E-02	-0.23193076E-02	-0.23201641E-02	-0.23210727E-02	-0.23220347E-02	-0.23230517E-02
EOLHT	-0.18844194E-02	-0.18843049E-02	-0.18841842E-02	-0.18840570E-02	-0.18839236E-02	-0.18837839E-02
EOFT	0.14718206E-02	0.14710149E-02	0.14701584E-02	0.14692499E-02	0.14682879E-02	0.14672709E-02
SBL	0.19156085E 06	0.19156085E 06	0.19156084E 06	0.19156085E 06	0.19156084E 06	0.19156084E 06
SBLH	0.19156108E 06	0.19156108E 06	0.19156108E 06	0.19156108E 06	0.19156108E 06	0.19156109E 06
SFD	0.49499839E 06	0.49499836E 06	0.49499834E 06	0.49499829E 06	0.49499825E 06	0.49499818E 06
EDL	0.32488853E-01	0.32488843E-01	0.32488844E-01	0.32488845E-01	0.32488840E-01	0.32488835E-01
EDLH	0.32489286E-01	0.32489293E-01	0.32489286E-01	0.32489290E-01	0.32489295E-01	0.32489304E-01
EFD	0.36279166E-01	0.36279163E-01	0.36279162E-01	0.36279158E-01	0.36279155E-01	0.36279149E-01

145

SAMPLE CASE NO. 1, INCONEL METAL-SHELL

10

DESIGN DATA FOR GEODESIC ISOTENSOID CONTOUR

CONTOUR INPUT DATA ABIG = 0.250000 C = -0.000000 V LEN = 16.000000

	25	26	27	28	29	30
Z	0.95660368E 00	0.95278729E 00	0.94879289E 00	0.94461739E 00	0.94025753E 00	0.93570980E 00
U	0.23999997E 00	0.24999997E 00	0.25999997E 00	0.26999997E 00	0.27999996E 00	0.28999996E 00
PHI	0.69552963E 02	0.68670009E 02	0.67782982E 02	0.66891662E 02	0.65995816E 02	0.65095203E 02
ALPHA	0.12068037E 02	0.12117108E 02	0.12168900E 02	0.12223520E 02	0.12281081E 02	0.12341708E 02
THETA	0.87040995E 02	0.86903093E 02	0.86763175E 02	0.86621105E 02	0.86476743E 02	0.86329935E 02
R ONE	0.69408520E 01	0.69505372E 01	0.69607676E 01	0.69715653E 01	0.69829547E 01	0.69949613E 01
R TWO	0.10209268E 02	0.10228518E 02	0.10248820E 02	0.10270212E 02	0.10292736E 02	0.10316438E 02
T	0.35145688E-01	0.35292939E-01	0.35448416E-01	0.35612446E-01	0.35785384E-01	0.35967612E-01
X	0.95660368E 01	0.95278729E 01	0.94879289E 01	0.94461739E 01	0.94025753E 01	0.93570979E 01
Y	0.23999997E 01	0.24999997E 01	0.25999997E 01	0.26999997E 01	0.27999996E 01	0.28999996E 01
XFO	0.95825025E 01	0.95443106E 01	0.95043372E 01	0.94625514E 01	0.94189204E 01	0.93734093E 01
YFO	0.24061387E 01	0.25064184E 01	0.26067015E 01	0.27069881E 01	0.28072784E 01	0.29075728E 01
XFI	0.95495710E 01	0.95114352E 01	0.94715204E 01	0.94297963E 01	0.93862300E 01	0.93407863E 01
YFI	0.23938608E 01	0.24935810E 01	0.25932978E 01	0.26930112E 01	0.27927208E 01	0.28924264E 01
XM	0.94933513E 01	0.94555451E 01	0.94159750E 01	0.93746104E 01	0.93314190E 01	0.92863659E 01
YM	0.23729003E 01	0.24717566E 01	0.25706109E 01	0.26694629E 01	0.27683126E 01	0.28671597E 01
SOL	0.00000000E-38	0.00000000E-38	0.00000000E-38	0.00000000E-38	0.00000000E-38	0.00000000E-38
SOLH	0.00000000E-38	0.00000000E-38	0.00000000E-38	0.00000000E-38	0.00000000E-38	0.00000000E-38
SOF	0.47000000E 05	0.47000000E 05	0.47000000E 05	0.47000000E 05	0.47000000E 05	0.47000000E 05
EOL	0.00000000E-38	0.00000000E-38	0.00000000E-38	0.00000000E-38	0.00000000E-38	0.00000000E-38
EOLH	0.00000000E-38	0.00000000E-38	0.00000000E-38	0.00000000E-38	0.00000000E-38	0.00000000E-38
EOF	0.37903226E-02	0.37903226E-02	0.37903226E-02	0.37903226E-02	0.37903226E-02	0.37903226E-02
SOLP	-0.15423414E 05	-0.15474919E 05	-0.15529187E 05	-0.15586314E 05	-0.15646402E 05	-0.15709563E 05
SOLHP	-0.70497347E 03	-0.71326711E 03	-0.72208871E 03	-0.73146775E 03	-0.74143655E 03	-0.75203054E 03
SOFP	0.40912412E 05	0.40892771E 05	0.40872087E 05	0.40850324E 05	0.40827445E 05	0.40803410E 05
EOLP	-0.49093455E-03	-0.49251842E-03	-0.49418648E-03	-0.49594155E-03	-0.49778663E-03	-0.49972496E-03
EOLHP	0.12154247E-03	0.12175675E-03	0.12197985E-03	0.12221171E-03	0.12245226E-03	0.12270137E-03
EOFP	0.32993880E-02	0.32978041E-02	0.32961361E-02	0.32943810E-02	0.32925359E-02	0.32905976E-02
SOLT	-0.11376453E 05	-0.11414207E 05	-0.11453986E 05	-0.11495857E 05	-0.11539898E 05	-0.11586188E 05
SOLHT	-0.51999499E 03	-0.52610155E 03	-0.53259670E 03	-0.53950210E 03	-0.54684150E 03	-0.55464097E 03
SOFT	0.30177375E 05	0.30162264E 05	0.30146350E 05	0.30129607E 05	0.30112006E 05	0.30093516E 05
EOLT	-0.23241251E-02	-0.23252569E-02	-0.23264488E-02	-0.23277028E-02	-0.23290210E-02	-0.23304058E-02
EOLHT	-0.18836379E-02	-0.18834856E-02	-0.18833270E-02	-0.18831623E-02	-0.18829914E-02	-0.18828145E-02
EOFT	0.14661974E-02	0.14650656E-02	0.14638737E-02	0.14626197E-02	0.14613015E-02	0.14599167E-02
SBL	0.19156084E 06	0.19156084E 06	0.19156083E 06	0.19156083E 06	0.19156083E 06	0.19156083E 06
SBLH	0.19156109E 06	0.19156110E 06	0.19156109E 06	0.19156109E 06	0.19156111E 06	0.19156111E 06
SFD	0.49499814E 06	0.49499808E 06	0.49499805E 06	0.49499800E 06	0.49499793E 06	0.49499788E 06
EDL	0.32488835E-01	0.32488822E-01	0.32488824E-01	0.32488824E-01	0.32488809E-01	0.32488806E-01
EDLH	0.32489304E-01	0.32489322E-01	0.32489313E-01	0.32489307E-01	0.32489334E-01	0.32489340E-01
EFD	0.36279147E-01	0.36279142E-01	0.36279140E-01	0.36279137E-01	0.36279131E-01	0.36279127E-01

146

SAMPLE CASE NO. INCONEL METAL-SHELL

11

DESIGN DATA FOR GEODESIC ISOTENSOID CONTOUR

CONTOUR INPUT DATA ABIG = 0.250000 C = -0.000000 V LEN = 16.000000

	31	32	33	34	35	36
Z	0.93097045E 00	0.92603549E 00	0.92090064E 00	0.91556130E 00	0.91001258E 00	0.90424923E 00
U	0.29999996E 00	0.30999996E 00	0.31999996E 00	0.32999995E 00	0.33999995E 00	0.34999995E 00
PHI	0.64189572E 02	0.63278661E 02	0.62362194E 02	0.61439884E 02	0.60511429E 02	0.59576514E 02
ALPHA	0.12405534E 02	0.12472706E 02	0.12543383E 02	0.12617735E 02	0.12695951E 02	0.12778234E 02
THETA	0.86180521E 02	0.86028329E 02	0.85873171E 02	0.85714849E 02	0.85553147E 02	0.85387836E 02
R ONE	0.70076135E 01	0.70209422E 01	0.70349805E 01	0.70497647E 01	0.70653346E 01	0.70817332E 01
R TWO	0.10341365E 02	0.10367572E 02	0.10395115E 02	0.10424056E 02	0.10454462E 02	0.10486408E 02
T	0.36159550E-01	0.36361651E-01	0.36574407E-01	0.36798356E-01	0.37034082E-01	0.37282224E-01
X	0.93097044E 01	0.92603548E 01	0.92090063E 01	0.91556129E 01	0.91001258E 01	0.90424923E 01
Y	0.29999996E 01	0.30999996E 01	0.31999995E 01	0.32999995E 01	0.33999995E 01	0.34999995E 01
XFO	0.93259805E 01	0.92765939E 01	0.92252069E 01	0.91717732E 01	0.91162440E 01	0.90585666E 01
YFO	0.30078714E 01	0.31081746E 01	0.32084826E 01	0.33087958E 01	0.34091145E 01	0.35094391E 01
XFI	0.92934282E 01	0.92441155E 01	0.91928056E 01	0.91394526E 01	0.90840075E 01	0.90264179E 01
YFI	0.29921277E 01	0.30918245E 01	0.31915164E 01	0.32912032E 01	0.33908845E 01	0.34905598E 01
XM	0.92394139E 01	0.91905233E 01	0.91396518E 01	0.90867536E 01	0.90317802E 01	0.89746795E 01
YM	0.29660040E 01	0.30648454E 01	0.31636836E 01	0.32625184E 01	0.33613495E 01	0.34601766E 01
SOL	0.00000000E-38	0.00000000E-38	0.00000000E-38	0.00000000E-38	0.00000000E-38	0.00000000E-38
SOLH	0.00000000E-38	0.00000000E-38	0.00000000E-38	0.00000000E-38	0.00000000E-38	0.00000000E-38
SOF	0.47000000E 05	0.47000000E 05	0.47000000E 05	0.47000000E 05	0.47000000E 05	0.47000000E 05
EOL	0.00000000E-38	0.00000000E-38	0.00000000E-38	0.00000000E-38	0.00000000E-38	0.00000000E-38
EOLH	0.00000000E-38	0.00000000E-38	0.00000000E-38	0.00000000E-38	0.00000000E-38	0.00000000E-38
EOF	0.37903226E-02	0.37903226E-02	0.37903226E-02	0.37903226E-02	0.37903226E-02	0.37903226E-02
SOLP	-0.15775916E 05	-0.15845590E 05	-0.15918725E 05	-0.15995473E 05	-0.16075998E 05	-0.16160477E 05
SOLHP	-0.76328858E 03	-0.77525352E 03	-0.78797243E 03	-0.80149731E 03	-0.81588559E 03	-0.83120078E 03
SOFP	0.40778175E 05	0.40751693E 05	0.40723914E 05	0.40694784E 05	0.40664244E 05	0.40632229E 05
EOLP	-0.50176006E-03	-0.50389568E-03	-0.50613590E-03	-0.50848513E-03	-0.51094811E-03	-0.51352994E-03
EOLHP	0.12295893E-03	0.12322475E-03	0.12349864E-03	0.12378032E-03	0.12406948E-03	0.12436572E-03
EOFP	0.32885625E-02	0.32864269E-02	0.32841866E-02	0.32818374E-02	0.32793745E-02	0.32767926E-02
SOLT	-0.11634815E 05	-0.11685874E 05	-0.11739466E 05	-0.11795703E 05	-0.11854703E 05	-0.11916597E 05
SOLHT	-0.56292908E 03	-0.57173731E 03	-0.58110030E 03	-0.59105624E 03	-0.60164735E 03	-0.61292033E 03
SOFT	0.30074104E 05	0.30053735E 05	0.30032369E 05	0.30009965E 05	0.29986477E 05	0.29961857E 05
EOLT	-0.23318597E-02	-0.23333853E-02	-0.23349855E-02	-0.23366635E-02	-0.23384226E-02	-0.23402665E-02
EOLHT	-0.18826317E-02	-0.18824430E-02	-0.18822487E-02	-0.18820488E-02	-0.18818438E-02	-0.18816338E-02
EOFT	0.14584629E-02	0.14569373E-02	0.14553371E-02	0.14536591E-02	0.14519000E-02	0.14500561E-02
SBL	0.19156083E 06	0.19156083E 06	0.19156083E 06	0.19156082E 06	0.19156083E 06	0.19156084E 06
SBLH	0.19156112E 06	0.19156112E 06	0.19156113E 06	0.19156112E 06	0.19156114E 06	0.19156115E 06
SFD	0.49499784E 06	0.49499777E 06	0.49499774E 06	0.49499770E 06	0.49499762E 06	0.49499755E 06
EDL	0.32488803E-01	0.32488797E-01	0.32488802E-01	0.32488794E-01	0.32488791E-01	0.32488789E-01
EDLH	0.32489343E-01	0.32489356E-01	0.32489356E-01	0.32489353E-01	0.32489372E-01	0.32489385E-01
EFD	0.36279125E-01	0.36279119E-01	0.36279117E-01	0.36279113E-01	0.36279107E-01	0.36279102E-01

I-1

SAMPLE CASE NO. 1, INCONEL METAL-SHELL

(12)

DESIGN DATA FOR GEODESIC ISOTENSOID CONTOUR

CONTOUR INPUT DATA ABIG = 0.250000 C = -0.000000 V LEN = 16.000000

	37	38	39	40	41	42
Z	0.89826562E 00	0.89205570E 00	0.88561296E 00	0.87893043E 00	0.87200058E 00	0.86481528E 00
U	0.35999995E 00	0.36999995E 00	0.37999994E 00	0.38999994E 00	0.39999994E 00	0.40999994E 00
PHI	0.58634804E 02	0.57685947E 02	0.56729573E 02	0.55765287E 02	0.54792674E 02	0.53811289E 02
ALPHA	0.12864808E 02	0.12955918E 02	0.13051829E 02	0.13152836E 02	0.13259261E 02	0.13371461E 02
THETA	0.85218664E 02	0.85045359E 02	0.84867624E 02	0.84685139E 02	0.84497548E 02	0.84304466E 02
R ONE	0.70990077E 01	0.71172099E 01	0.71363967E 01	0.71566303E 01	0.71779797E 01	0.72005206E 01
R TWO	0.10519972E 02	0.10555241E 02	0.10592311E 02	0.10631284E 02	0.10672274E 02	0.10715407E 02
T	0.37543480E-01	0.37818617E-01	0.38108472E-01	0.38413970E-01	0.38736130E-01	0.39076074E-01
X	0.89826561E 01	0.89205569E 01	0.88561296E 01	0.87893043E 01	0.87200058E 01	0.86481527E 01
Y	0.35999995E 01	0.36999995E 01	0.37999994E 01	0.38999994E 01	0.39999994E 01	0.40999994E 01
XFO	0.89986846E 01	0.89365376E 01	0.88720607E 01	0.88051834E 01	0.87358308E 01	0.86639214E 01
YFO	0.36097700E 01	0.37101076E 01	0.38104524E 01	0.39108050E 01	0.40111657E 01	0.41115355E 01
XFI	0.89666275E 01	0.89045761E 01	0.88401985E 01	0.87734250E 01	0.87041806E 01	0.86323839E 01
YFI	0.35902289E 01	0.36898913E 01	0.37895464E 01	0.38891938E 01	0.39888330E 01	0.40884632E 01
XM	0.89153955E 01	0.88538681E 01	0.87900331E 01	0.87238207E 01	0.86551564E 01	0.85839593E 01
YM	0.35589994E 01	0.36578177E 01	0.37566309E 01	0.38554388E 01	0.39542407E 01	0.40530363E 01
SOL	0.00000000E-38	0.00000000E-38	0.00000000E-38	0.00000000E-38	0.00000000E-38	0.00000000E-38
SOLH	0.00000000E-38	0.00000000E-38	0.00000000E-38	0.00000000E-38	0.00000000E-38	0.00000000E-38
SOF	0.47000000E 05	0.47000000E 05	0.47000000E 05	0.47000000E 05	0.47000000E 05	0.47000000E 05
EOL	0.00000000E-38	0.00000000E-38	0.00000000E-38	0.00000000E-38	0.00000000E-38	0.00000000E-38
EOLH	0.00000000E-38	0.00000000E-38	0.00000000E-38	0.00000000E-38	0.00000000E-38	0.00000000E-38
EOF	0.37903226E-02	0.37903226E-02	0.37903226E-02	0.37903226E-02	0.37903226E-02	0.37903226E-02
SOLP	-0.16249102E 05	-0.16342084E 05	-0.16439651E 05	-0.16542051E 05	-0.16649557E 05	-0.16762466E 05
SOLHP	-0.84751338E 03	-0.86490187E 03	-0.88345368E 03	-0.90326640E 03	-0.92444957E 03	-0.94712614E 03
SOFP	0.40598670E 05	0.40563495E 05	0.40526620E 05	0.40487958E 05	0.40447414E 05	0.40404880E 05
EOLP	-0.51623624E-03	-0.51907299E-03	-0.52204674E-03	-0.52516464E-03	-0.52843440E-03	-0.53186448E-03
EOLHP	0.12466859E-03	0.12497750E-03	0.12529177E-03	0.12561059E-03	0.12593296E-03	0.12625770E-03
EOFP	0.32740863E-02	0.32712496E-02	0.32682758E-02	0.32651579E-02	0.32618882E-02	0.32584581E-02
SOLT	-0.11981525E 05	-0.12049640E 05	-0.12121108E 05	-0.12196112E 05	-0.12274849E 05	-0.12357537E 05
SOLHT	-0.62492700E 03	-0.63772503E 03	-0.65137866E 03	-0.66595962E 03	-0.68154842E 03	-0.69823537E 03
SOFT	0.29936053E 05	0.29909007E 05	0.29880656E 05	0.29850934E 05	0.29819767E 05	0.29787074E 05
EOLT	-0.23421991E-02	-0.23442247E-02	-0.23463480E-02	-0.23485741E-02	-0.23509084E-02	-0.23533569E-02
EOLHT	-0.18814192E-02	-0.18812005E-02	-0.18809780E-02	-0.18807525E-02	-0.18805247E-02	-0.18802953E-02
EOFT	0.14481235E-02	0.14460978E-02	0.14439745E-02	0.14417484E-02	0.14394141E-02	0.14369656E-02
SBL	0.19156083E 06	0.19156083E 06	0.19156082E 06	0.19156083E 06	0.19156083E 06	0.19156083E 06
SBLH	0.19156115E 06	0.19156115E 06	0.19156116E 06	0.19156117E 06	0.19156119E 06	0.19156120E 06
SFO	0.49499748E 06	0.49499743E 06	0.49499735E 06	0.49499726E 06	0.49499718E 06	0.49499712E 06
EDL	0.32488786E-01	0.32488777E-01	0.32488769E-01	0.32488768E-01	0.32488764E-01	0.32488757E-01
EDLH	0.32489381E-01	0.32489389E-01	0.32489403E-01	0.32489416E-01	0.32489432E-01	0.32489441E-01
EFD	0.36279098E-01	0.36279093E-01	0.36279088E-01	0.36279081E-01	0.36279074E-01	0.36279071E-01

148

SAMPLE CASE NO. INCONEL METAL-SHELL

13

DESIGN DATA FOR GEODESIC ISOTENSOID CONTOUR

CONTOUR INPUT DATA ABIG = 0.250000 C = -0.000000 V LEN = 16.000000

	43	44	45	46	47	48
Z	0.85736574E 00	0.84964246E 00	0.84163512E 00	0.83333250E 00	0.82472239E 00	0.81579142E 00
U	0.41999993E 00	0.42999993E 00	0.43999993E 00	0.44999993E 00	0.45999993E 00	0.46999992E 00
PHI	0.52820662E 02	0.51820289E 02	0.50809631E 02	0.49788112E 02	0.48755112E 02	0.47709962E 02
ALPHA	0.13489829E 02	0.13614802E 02	0.13746865E 02	0.13886559E 02	0.14034490E 02	0.14191336E 02
THETA	0.84105467E 02	0.83900081E 02	0.83687789E 02	0.83468013E 02	0.83240108E 02	0.83003353E 02
R ONE	0.72243373E 01	0.72495232E 01	0.72761825E 01	0.73044311E 01	0.73343996E 01	0.73662345E 01
R TWO	0.10760818E 02	0.10808661E 02	0.10859100E 02	0.10912323E 02	0.10968534E 02	0.11027965E 02
T	0.39435051E-01	0.39814444E-01	0.40215798E-01	0.40640835E-01	0.41091492E-01	0.41569947E-01
X	0.85736574E 01	0.84964246E 01	0.84163512E 01	0.83333249E 01	0.82472239E 01	0.81579142E 01
Y	0.41999993E 01	0.42999993E 01	0.43999993E 01	0.44999993E 01	0.45999992E 01	0.46999992E 01
XFO	0.85893673E 01	0.85120730E 01	0.84319358E 01	0.83488427E 01	0.82626721E 01	0.81732898E 01
YFO	0.42119148E 01	0.43123045E 01	0.44127054E 01	0.45131184E 01	0.46135446E 01	0.47139851E 01
XFI	0.85579474E 01	0.84807760E 01	0.84007665E 01	0.83178070E 01	0.82317755E 01	0.81425384E 01
YFI	0.41880838E 01	0.42876940E 01	0.43872930E 01	0.44868801E 01	0.45864539E 01	0.46860133E 01
XM	0.85101426E 01	0.84336114E 01	0.83542634E 01	0.82719872E 01	0.81866616E 01	0.80981536E 01
YM	0.41518250E 01	0.42506062E 01	0.43493791E 01	0.44481431E 01	0.45468971E 01	0.46456403E 01
SOL	0.00000000E-38	0.00000000E-38	0.00000000E-38	0.00000000E-38	0.00000000E-38	0.00000000E-38
SOLH	0.00000000E-38	0.00000000E-38	0.00000000E-38	0.00000000E-38	0.00000000E-38	0.00000000E-38
SOF	0.47000000E 05	0.47000000E 05	0.47000000E 05	0.47000000E 05	0.47000000E 05	0.47000000E 05
EOL	0.00000000E-38	0.00000000E-38	0.00000000E-38	0.00000000E-38	0.00000000E-38	0.00000000E-38
EOLH	0.00000000E-38	0.00000000E-38	0.00000000E-38	0.00000000E-38	0.00000000E-38	0.00000000E-38
EOF	0.37903226E-02	0.37903226E-02	0.37903226E-02	0.37903226E-02	0.37903226E-02	0.37903226E-02
SOLP	-0.16881104E 05	-0.17005832E 05	-0.17137044E 05	-0.17275179E 05	-0.17420720E 05	-0.17574208E 05
SOLHP	-0.97143497E 03	-0.99753300E 03	-0.10255984E 04	-0.10558345E 04	-0.10884738E 04	-0.11237836E 04
SOFP	0.40360245E 05	0.40313381E 05	0.40264152E 05	0.40212405E 05	0.40157975E 05	0.40100675E 05
EOLP	-0.53546413E-03	-0.53924345E-03	-0.54321357E-03	-0.54738666E-03	-0.55177622E-03	-0.55639711E-03
EOLHP	0.12658339E-03	0.12690833E-03	0.12723047E-03	0.12754733E-03	0.12785597E-03	0.12815279E-03
EOFP	0.32548584E-02	0.32510791E-02	0.32471090E-02	0.32429359E-02	0.32385463E-02	0.32339254E-02
SOLT	-0.12444414E 05	-0.12535741E 05	-0.12631808E 05	-0.12732934E 05	-0.12839471E 05	-0.12951813E 05
SOLHT	-0.71612251E 03	-0.73532513E 03	-0.75597414E 03	-0.77821890E 03	-0.80223016E 03	-0.82820433E 03
SOFT	0.29752769E 05	0.29716753E 05	0.29678924E 05	0.29639166E 05	0.29597349E 05	0.29553334E 05
EOLT	-0.23559263E-02	-0.23586236E-02	-0.23614568E-02	-0.23644346E-02	-0.23675664E-02	-0.23708630E-02
EOLHT	-0.18800655E-02	-0.18798364E-02	-0.18796096E-02	-0.18793869E-02	-0.18791703E-02	-0.18789626E-02
EOFT	0.14343963E-02	0.14316989E-02	0.14288657E-02	0.14258880E-02	0.14227561E-02	0.14194596E-02
SBL	0.19156083E 06	0.19156083E 06	0.19156083E 06	0.19156084E 06	0.19156084E 06	0.19156084E 06
SBLH	0.19156120E 06	0.19156121E 06	0.19156123E 06	0.19156125E 06	0.19156126E 06	0.19156128E 06
SFD	0.49499706E 06	0.49499699E 06	0.49499691E 06	0.49499682E 06	0.49499675E 06	0.49499668E 06
EDL	0.32488753E-01	0.32488747E-01	0.32488737E-01	0.32488734E-01	0.32488729E-01	0.32488716E-01
EDLH	0.32489449E-01	0.32489459E-01	0.32489480E-01	0.32489505E-01	0.32489517E-01	0.32489543E-01
EFD	0.36279066E-01	0.36279060E-01	0.36279055E-01	0.36279048E-01	0.36279043E-01	0.36279038E-01

14

SAMPLE CASE NO. 1, INCONEL METAL-SHELL

(14)

DESIGN DATA FOR GEODESIC ISOTENSOID CONTOUR

CONTOUR INPUT DATA ABIG = 0.250000 C = -0.000000 V LEN = 16.000000

	49	50	51	52	53	54
Z	0.80652499E 00	0.79690702E 00	0.78691979E 00	0.77654374E 00	0.76575713E 00	0.75453572E 00
U	0.47999992E 00	0.48999992E 00	0.49999992E 00	0.50999991E 00	0.51999990E 00	0.52999989E 00
PHI	0.46651940E 02	0.45580264E 02	0.44494083E 02	0.43392471E 02	0.42274414E 02	0.41138796E 02
ALPHA	0.14357864E 02	0.14534943E 02	0.14723556E 02	0.14924831E 02	0.15140062E 02	0.15370741E 02
THETA	0.82756937E 02	0.82499947E 02	0.82231340E 02	0.81949936E 02	0.81654373E 02	0.81343087E 02
R ONE	0.74001017E 01	0.74361889E 01	0.74747105E 01	0.75159120E 01	0.75600761E 01	0.76075301E 01
R TWO	0.11090873E 02	0.11157546E 02	0.11228311E 02	0.11303537E 02	0.11383643E 02	0.11469110E 02
T	0.42078663E-01	0.42620436E-01	0.43198459E-01	0.43816389E-01	0.44478443E-01	0.45189518E-01
X	0.80652499E 01	0.79690701E 01	0.78691979E 01	0.77654374E 01	0.76575713E 01	0.75453572E 01
Y	0.47999992E 01	0.48999992E 01	0.49999992E 01	0.50999991E 01	0.51999990E 01	0.52999989E 01
XFO	0.80805496E 01	0.79842905E 01	0.78843354E 01	0.77804881E 01	0.76725311E 01	0.75602219E 01
YFO	0.48144411E 01	0.49149144E 01	0.50154064E 01	0.51159189E 01	0.52164544E 01	0.53170153E 01
XFI	0.80499501E 01	0.79538497E 01	0.78540604E 01	0.77503867E 01	0.76426113E 01	0.75304924E 01
YFI	0.47855572E 01	0.48850840E 01	0.49845919E 01	0.50840791E 01	0.51835434E 01	0.52829823E 01
XM	0.80063183E 01	0.79109958E 01	0.78120102E 01	0.77091671E 01	0.76022504E 01	0.74910192E 01
YM	0.47443714E 01	0.48430893E 01	0.49417925E 01	0.50404792E 01	0.51391475E 01	0.52377952E 01
SOL	0.00000000E-38	0.00000000E-38	0.00000000E-38	0.00000000E-38	0.00000000E-38	0.00000000E-38
SOLH	0.00000000E-38	0.00000000E-38	0.00000000E-38	0.00000000E-38	0.00000000E-38	0.00000000E-38
SOF	0.47000000E 05	0.47000000E 05	0.47000000E 05	0.47000000E 05	0.47000000E 05	0.47000000E 05
EOL	0.00000000E-38	0.00000000E-38	0.00000000E-38	0.00000000E-38	0.00000000E-38	0.00000000E-38
EOLH	0.00000000E-38	0.00000000E-38	0.00000000E-38	0.00000000E-38	0.00000000E-38	0.00000000E-38
EOF	0.37903226E-02	0.37903226E-02	0.37903226E-02	0.37903226E-02	0.37903226E-02	0.37903226E-02
SOLP	-0.17736242E 05	-0.17907496E 05	-0.18088724E 05	-0.18280780E 05	-0.18484627E 05	-0.18701366E 05
SOLHP	-0.11620731E 04	-0.12037009E 04	-0.12490862E 04	-0.12987208E 04	-0.13531869E 04	-0.14131772E 04
SOFP	0.40040304E 05	0.39976631E 05	0.39909404E 05	0.39838339E 05	0.39763118E 05	0.39683381E 05
EOLP	-0.56126584E-03	-0.56640072E-03	-0.57182223E-03	-0.57755323E-03	-0.58361945E-03	-0.59004981E-03
EOLHP	0.12843345E-03	0.12869267E-03	0.12892399E-03	0.12911952E-03	0.12926951E-03	0.12936190E-03
EOFP	0.32290567E-02	0.32239218E-02	0.32185003E-02	0.32127693E-02	0.32067031E-02	0.32002727E-02
SOLT	-0.13070397E 05	-0.13195714E 05	-0.13328315E 05	-0.13468818E 05	-0.13617929E 05	-0.13776448E 05
SOLHT	-0.85636840E 03	-0.88698576E 03	-0.92036418E 03	-0.95686484E 03	-0.99691509E 03	-0.10410235E 04
SOFT	0.29506965E 05	0.29458067E 05	0.29406446E 05	0.29351885E 05	0.29294144E 05	0.29232946E 05
EOLT	-0.23743358E-02	-0.23779981E-02	-0.23818643E-02	-0.23859505E-02	-0.23902751E-02	-0.23948586E-02
EOLHT	-0.18787668E-02	-0.18785868E-02	-0.18784271E-02	-0.18782936E-02	-0.18781932E-02	-0.18781346E-02
EOFT	0.14159867E-02	0.14123245E-02	0.14084583E-02	0.14043720E-02	0.14000474E-02	0.13954639E-02
SBL	0.19156085E 06	0.19156085E 06	0.19156085E 06	0.19156086E 06	0.19156087E 06	0.19156088E 06
SBLH	0.19156129E 06	0.19156131E 06	0.19156133E 06	0.19156135E 06	0.19156138E 06	0.19156141E 06
SFD	0.49499661E 06	0.49499653E 06	0.49499644E 06	0.49499633E 06	0.49499622E 06	0.49499611E 06
EDL	0.32488715E-01	0.32488709E-01	0.32488700E-01	0.32488695E-01	0.32488691E-01	0.32488683E-01
EDLH	0.32489550E-01	0.32489573E-01	0.32489597E-01	0.32489620E-01	0.32489649E-01	0.32489681E-01
EFD	0.36279032E-01	0.36279026E-01	0.36279019E-01	0.36279012E-01	0.36279003E-01	0.36278994E-01

151
0

SAMPLE CASE NO. INCONEL METAL-SHELL

15

DESIGN DATA FOR GEODESIC ISOTENSOID CONTOUR

CONTOUR INPUT DATA ABIG = 0.250000 C = -0.000000 V LEN = 16.000000

	55	56	57	58	59	60
Z	0.74285237E 00	0.73067658E 00	0.71797383E 00	0.70470479E 00	0.69082445E 00	0.67628089E 00
U	0.53999988E 00	0.54999987E 00	0.55999986E 00	0.56999985E 00	0.57999984E 00	0.58999983E 00
PHI	0.39984389E 02	0.38809834E 02	0.37613616E 02	0.36394044E 02	0.35149217E 02	0.33876986E 02
ALPHA	0.15618607E 02	0.15885690E 02	0.16174386E 02	0.16487543E 02	0.16828578E 02	0.17201629E 02
THETA	0.81014258E 02	0.80665761E 02	0.80295089E 02	0.79899264E 02	0.79474717E 02	0.79017118E 02
R ONE	0.76586563E 01	0.77139031E 01	0.77738019E 01	0.78389866E 01	0.79102215E 01	0.79884385E 01
R TWO	0.11560489E 02	0.11658417E 02	0.11763636E 02	0.11877013E 02	0.11999570E 02	0.12132525E 02
T	0.45955325E-01	0.46782584E-01	0.47679259E-01	0.48654879E-01	0.49720948E-01	0.50891507E-01
X	0.74285237E 01	0.73067658E 01	0.71797383E 01	0.70470479E 01	0.69082445E 01	0.67628089E 01
Y	0.53999988E 01	0.54999987E 01	0.55999986E 01	0.56999985E 01	0.57999984E 01	0.58999983E 01
XFO	0.74432886E 01	0.73214260E 01	0.71942884E 01	0.70614822E 01	0.69225568E 01	0.67769926E 01
YFO	0.54176047E 01	0.55182258E 01	0.56188830E 01	0.57195809E 01	0.58203257E 01	0.59211243E 01
XFI	0.74137588E 01	0.72921056E 01	0.71651881E 01	0.70326136E 01	0.68939321E 01	0.67486251E 01
YFI	0.53823928E 01	0.54817715E 01	0.55811141E 01	0.56804160E 01	0.57796711E 01	0.58788723E 01
XM	0.73752040E 01	0.72545013E 01	0.71285681E 01	0.69970134E 01	0.68593897E 01	0.67151804E 01
YM	0.53364196E 01	0.54350176E 01	0.55335854E 01	0.56321186E 01	0.57306117E 01	0.58290581E 01
SOL	0.00000000E-38	0.00000000E-38	0.00000000E-38	0.00000000E-38	0.00000000E-38	0.00000000E-38
SOLH	0.00000000E-38	0.00000000E-38	0.00000000E-38	0.00000000E-38	0.00000000E-38	0.00000000E-38
SOF	0.47000000E 05	0.47000000E 05	0.47000000E 05	0.47000000E 05	0.47000000E 05	0.47000000E 05
EOL	0.00000000E-38	0.00000000E-38	0.00000000E-38	0.00000000E-38	0.00000000E-38	0.00000000E-38
EOLH	0.00000000E-38	0.00000000E-38	0.00000000E-38	0.00000000E-38	0.00000000E-38	0.00000000E-38
EOF	0.37903226E-02	0.37903226E-02	0.37903226E-02	0.37903226E-02	0.37903226E-02	0.37903226E-02
SOLP	-0.18932254E 05	-0.19178736E 05	-0.19442488E 05	-0.19725461E 05	-0.20029947E 05	-0.20358658E 05
SOLHP	-0.14795235E 04	-0.15532316E 04	-0.16355306E 04	-0.17279364E 04	-0.18323412E 04	-0.19511357E 04
SOFP	0.39598723E 05	0.39508680E 05	0.39412726E 05	0.39310256E 05	0.39200572E 05	0.39082869E 05
EOLP	-0.59687715E-03	-0.60413867E-03	-0.61187690E-03	-0.62014063E-03	-0.62898605E-03	-0.63847833E-03
EOLHP	0.12938161E-03	0.12930974E-03	0.12912229E-03	0.12878862E-03	0.12826914E-03	0.12751209E-03
EOFP	0.31934454E-02	0.31861839E-02	0.31784456E-02	0.31701819E-02	0.31613365E-02	0.31518442E-02
SOLT	-0.13945289E 05	-0.14125505E 05	-0.14318317E 05	-0.14525144E 05	-0.14747654E 05	-0.14987820E 05
SOLHT	-0.10898006E 04	-0.11439848E 04	-0.12044778E 04	-0.12723923E 04	-0.13491167E 04	-0.14364047E 04
SOFT	0.29167981E 05	0.29098897E 05	0.29025292E 05	0.28946706E 05	0.28862607E 05	0.28772378E 05
EOLT	-0.23997242E-02	-0.24048982E-02	-0.24104109E-02	-0.24162966E-02	-0.24225953E-02	-0.24293530E-02
EOLHT	-0.18781288E-02	-0.18781892E-02	-0.18783332E-02	-0.18785827E-02	-0.18789663E-02	-0.18795212E-02
EOFT	0.13905984E-02	0.13854243E-02	0.13799117E-02	0.13740259E-02	0.13677273E-02	0.13609695E-02
SBL	0.19156089E 06	0.19156090E 06	0.19156091E 06	0.19156093E 06	0.19156094E 06	0.19156096E 06
SBLH	0.19156145E 06	0.19156148E 06	0.19156152E 06	0.19156158E 06	0.19156162E 06	0.19156166E 06
SFD	0.49499598E 06	0.49499583E 06	0.49499573E 06	0.49499557E 06	0.49499541E 06	0.49499525E 06
EDL	0.32488667E-01	0.32488657E-01	0.32488649E-01	0.32488638E-01	0.32488629E-01	0.32488622E-01
EDLH	0.32489724E-01	0.32489764E-01	0.32489797E-01	0.32489861E-01	0.32489906E-01	0.32489949E-01
EFD	0.36278985E-01	0.36278974E-01	0.36278966E-01	0.36278955E-01	0.36278942E-01	0.36278930E-01

51

DESIGN DATA FOR GEODESIC ISOTENSOID CONTOUR

CONTOUR INPUT DATA ABIG = 0.250000 C = -0.000000 V LEN = 16.000000

	61	62	63	64	65	66
Z	0.66101369E 00	0.64495188E 00	0.62801133E 00	0.61009104E 00	0.59106815E 00	0.57079083E 00
U	0.59999982E 00	0.60999981E 00	0.61999980E 00	0.62999979E 00	0.63999978E 00	0.64999977E 00
PHI	0.32574904E 02	0.31240170E 02	0.29869549E 02	0.28459273E 02	0.27004917E 02	0.25501231E 02
ALPHA	0.17611770E 02	0.18065303E 02	0.18570162E 02	0.19136514E 02	0.19777632E 02	0.20511243E 02
THETA	0.78521163E 02	0.77980257E 02	0.77386087E 02	0.76727991E 02	0.75992023E 02	0.75159511E 02
R ONE	0.80747876E 01	0.81707063E 01	0.82780212E 01	0.83990970E 01	0.85370604E 01	0.86961504E 01
R TWO	0.12277336E 02	0.12435770E 02	0.12609991E 02	0.12802681E 02	0.13017206E 02	0.13257854E 02
T	0.52183911E-01	0.53619906E-01	0.55227170E-01	0.57041575E-01	0.59110603E-01	0.61498682E-01
X	0.66101368E 01	0.64495188E 01	0.62801133E 01	0.61009104E 01	0.59106815E 01	0.57079083E 01
Y	0.59999982E 01	0.60999981E 01	0.61999980E 01	0.62999979E 01	0.63999978E 01	0.64999977E 01
XFO	0.66241847E 01	0.64634231E 01	0.62938656E 01	0.61145015E 01	0.59241015E 01	0.57211468E 01
YFO	0.60219856E 01	0.61229206E 01	0.62239434E 01	0.63250721E 01	0.64263306E 01	0.65277513E 01
XFI	0.65960888E 01	0.64356144E 01	0.62663609E 01	0.60873192E 01	0.58972614E 01	0.56946697E 01
YFI	0.59780108E 01	0.60770755E 01	0.61760526E 01	0.62749237E 01	0.63736650E 01	0.64722441E 01
XM	0.65637847E 01	0.64044968E 01	0.62364793E 01	0.60587272E 01	0.58700173E 01	0.56688379E 01
YM	0.59274495E 01	0.60257755E 01	0.61240228E 01	0.62221743E 01	0.63202069E 01	0.64180895E 01
SOL	0.00000000E-38	0.00000000E-38	0.00000000E-38	0.00000000E-38	0.00000000E-38	0.00000000E-38
SOLH	0.00000000E-38	0.00000000E-38	0.00000000E-38	0.00000000E-38	0.00000000E-38	0.00000000E-38
SOF	0.47000000E 05	0.47000000E 05	0.47000000E 05	0.47000000E 05	0.47000000E 05	0.47000000E 05
EOL	0.00000000E-38	0.00000000E-38	0.00000000E-38	0.00000000E-38	0.00000000E-38	0.00000000E-38
EOLH	0.00000000E-38	0.00000000E-38	0.00000000E-38	0.00000000E-38	0.00000000E-38	0.00000000E-38
EOF	0.37903226E-02	0.37903226E-02	0.37903226E-02	0.37903226E-02	0.37903226E-02	0.37903226E-02
SOLP	-0.20714832E 05	-0.21102378E 05	-0.21526063E 05	-0.21991773E 05	-0.22506888E 05	-0.23080802E 05
SOLHP	-0.20873839E 04	-0.22450764E 04	-0.24295046E 04	-0.26478340E 04	-0.29100044E 04	-0.32302029E 04
SOFP	0.38956204E 05	0.38819478E 05	0.38671397E 05	0.38510439E 05	0.38334805E 05	0.38142383E 05
EOLP	-0.64869324E-03	-0.65971954E-03	-0.67166149E-03	-0.68464197E-03	-0.69880602E-03	-0.71432396E-03
EOLHP	0.12644895E-03	0.12498752E-03	0.12300173E-03	0.12031549E-03	0.11667720E-03	0.11171708E-03
EOFP	0.31416293E-02	0.31306030E-02	0.31186611E-02	0.31056805E-02	0.30915165E-02	0.30759986E-02
SOLT	-0.15247999E 05	-0.15531034E 05	-0.15840391E 05	-0.16180354E 05	-0.16556289E 05	-0.16975030E 05
SOLHT	-0.15365043E 04	-0.16523425E 04	-0.17878004E 04	-0.19481326E 04	-0.21406279E 04	-0.23756884E 04
SOFT	0.28675307E 05	0.28570553E 05	0.28457135E 05	0.28333892E 05	0.28199461E 05	0.28052236E 05
EOLT	-0.24366232E-02	-0.24444688E-02	-0.24529633E-02	-0.24621936E-02	-0.24722619E-02	-0.24832883E-02
EOLHT	-0.18802964E-02	-0.18813582E-02	-0.18827969E-02	-0.18847389E-02	-0.18873644E-02	-0.18909382E-02
EOFT	0.13536993E-02	0.13458537E-02	0.13373592E-02	0.13281290E-02	0.13180606E-02	0.13070342E-02
SBL	0.19156098E 06	0.19156101E 06	0.19156105E 06	0.19156109E 06	0.19156115E 06	0.19156122E 06
SBLH	0.19156173E 06	0.19156181E 06	0.19156192E 06	0.19156202E 06	0.19156218E 06	0.19156235E 06
SFD	0.49499509E 06	0.49499491E 06	0.49499468E 06	0.49499447E 06	0.49499421E 06	0.49499388E 06
EDL	0.32488611E-01	0.32488593E-01	0.32488576E-01	0.32488565E-01	0.32488543E-01	0.32488517E-01
EDLH	0.32490022E-01	0.32490107E-01	0.32490216E-01	0.32490311E-01	0.32490473E-01	0.32490649E-01
EFD	0.36278919E-01	0.36278905E-01	0.36278887E-01	0.36278872E-01	0.36278852E-01	0.36278828E-01

SAMPLE CASE NO. INCONEL METAL-SHELL

(17)

DESIGN DATA FOR GEODESIC ISOTENSOID CONTOUR

CONTOUR INPUT DATA ABIG = 0.250000 C = -0.000000 V LEN = 16.000000

	67	68	69	70	71	72
Z	0.54906808E 00	0.52565435E 00	0.50022582E 00	0.47234193E 00	0.45729430E 00	0.44137976E 00
U	0.65999977E 00	0.66999976E 00	0.67999975E 00	0.68999974E 00	0.69499972E 00	0.69999971E 00
PHI	0.23941914E 02	0.22319333E 02	0.20624147E 02	0.18844875E 02	0.17919430E 02	0.16967526E 02
ALPHA	0.21361660E 02	0.22363312E 02	0.23566899E 02	0.25050836E 02	0.25935258E 02	0.26944338E 02
THETA	0.74204772E 02	0.73091300E 02	0.71765066E 02	0.70141963E 02	0.69194641E 02	0.68117832E 02
R ONE	0.88822975E 01	0.91041151E 01	0.93747318E 01	0.97154605E 01	0.99228508E 01	0.10164048E 02
R TWO	0.13530171E 02	0.13841452E 02	0.14201439E 02	0.14623276E 02	0.14862698E 02	0.15124574E 02
T	0.64295836E-01	0.67632464E-01	0.71705997E-01	0.76832719E-01	0.79947253E-01	0.83558477E-01
X	0.54906808E 01	0.52565435E 01	0.50022582E 01	0.47234192E 01	0.45729429E 01	0.44137976E 01
Y	0.65999976E 01	0.66999975E 01	0.67999974E 01	0.68999974E 01	0.69499971E 01	0.69999971E 01
XFO	0.55037267E 01	0.52693858E 01	0.50148869E 01	0.47358280E 01	0.45852419E 01	0.44259899E 01
YFO	0.66293795E 01	0.67312803E 01	0.68335527E 01	0.69363545E 01	0.69880316E 01	0.70399576E 01
XFI	0.54776348E 01	0.52437012E 01	0.49896294E 01	0.47110105E 01	0.45606439E 01	0.44016051E 01
YFI	0.65706158E 01	0.66687148E 01	0.67664422E 01	0.68636402E 01	0.69119626E 01	0.69600365E 01
XM	0.54532862E 01	0.52209151E 01	0.49684952E 01	0.46916301E 01	0.45421831E 01	0.43840953E 01
YM	0.65157784E 01	0.66132098E 01	0.67102875E 01	0.68068564E 01	0.68548732E 01	0.69026482E 01
SOL	0.00000000E-38	0.00000000E-38	0.00000000E-38	0.00000000E-38	0.00000000E-38	0.00000000E-38
SOLH	0.00000000E-38	0.00000000E-38	0.00000000E-38	0.00000000E-38	0.00000000E-38	0.00000000E-38
SOF	0.47000000E 05	0.47000000E 05	0.47000000E 05	0.47000000E 05	0.47000000E 05	0.47000000E 05
EOL	0.00000000E-38	0.00000000E-38	0.00000000E-38	0.00000000E-38	0.00000000E-38	0.00000000E-38
EOLH	0.00000000E-38	0.00000000E-38	0.00000000E-38	0.00000000E-38	0.00000000E-38	0.00000000E-38
EOF	0.37903226E-02	0.37903226E-02	0.37903226E-02	0.37903226E-02	0.37903226E-02	0.37903226E-02
SOLP	-0.23725695E 05	-0.24457706E 05	-0.25298719E 05	-0.26279230E 05	-0.26834768E 05	-0.27442954E 05
SOLHP	-0.36293750E 04	-0.41397413E 04	-0.48134489E 04	-0.57405258E 04	-0.63467501E 04	-0.70901945E 04
SOFP	0.37930729E 05	0.37697127E 05	0.37438872E 05	0.37154208E 05	0.37002316E 05	0.36845281E 05
EOLP	-0.73139279E-03	-0.75023163E-03	-0.77105868E-03	-0.79401540E-03	-0.80626485E-03	-0.81892896E-03
EOLHP	0.10487344E-03	0.95257849E-04	0.81392893E-04	0.60659705E-04	0.46301053E-04	0.28008458E-04
EOFP	0.30589298E-02	0.30400909E-02	0.30192638E-02	0.29963071E-02	0.29840577E-02	0.29713936E-02
SOLT	-0.17445442E 05	-0.17979272E 05	-0.18592470E 05	-0.19307290E 05	-0.19712297E 05	-0.20155735E 05
SOLHT	-0.26686700E 04	-0.30431937E 04	-0.35374876E 04	-0.42175511E 04	-0.46621988E 04	-0.52074599E 04
SOFT	0.27890367E 05	0.27711795E 05	0.27514480E 05	0.27297112E 05	0.27181180E 05	0.27061362E 05
EOLT	-0.24954116E-02	-0.25087858E-02	-0.25235639E-02	-0.25398437E-02	-0.25485265E-02	-0.25575003E-02
EOLHT	-0.18958625E-02	-0.19027730E-02	-0.19127267E-02	-0.19275963E-02	-0.19378875E-02	-0.19509926E-02
EOFT	0.12949109E-02	0.12815367E-02	0.12667587E-02	0.12504788E-02	0.12417961E-02	0.12328223E-02
SBL	0.19156131E 06	0.19156144E 06	0.19156161E 06	0.19156188E 06	0.19156206E 06	0.19156227E 06
SBLH	0.19156258E 06	0.19156288E 06	0.19156329E 06	0.19156390E 06	0.19156431E 06	0.19156480E 06
SFD	0.49499352E 06	0.49499311E 06	0.49499263E 06	0.49499200E 06	0.49499150E 06	0.49499092E 06
EDL	0.32488485E-01	0.32488457E-01	0.32488417E-01	0.32488371E-01	0.32488342E-01	0.32488292E-01
EDLH	0.32490885E-01	0.32491184E-01	0.32491588E-01	0.32492185E-01	0.32492584E-01	0.32493073E-01
EFD	0.36278801E-01	0.36278770E-01	0.36278734E-01	0.36278686E-01	0.36278650E-01	0.36278606E-01

15

SAMPLE CASE NO. 1, INCONEL METAL-SHELL

18

DESIGN DATA FOR GEODESIC ISOTENSOID CONTOUR

CONTOUR INPUT DATA ABIG = 0.250000 C = -0.000000 V LEN = 16.000000

	73	74	75	76	77	78
Z	0.42447301E 00	0.40641776E 00	0.38701607E 00	0.36601368E 00	0.34308084E 00	0.31779295E 00
U	0.70499971E 00	0.70999970E 00	0.71499970E 00	0.71999969E 00	0.72499969E 00	0.72999968E 00
PHI	0.15987097E 02	0.14976141E 02	0.13933099E 02	0.12857752E 02	0.11753473E 02	0.10633308E 02
ALPHA	0.28110442E 02	0.29479007E 02	0.31116144E 02	0.33122292E 02	0.35658521E 02	0.39001503E 02
THETA	0.66877542E 02	0.65425855E 02	0.63692731E 02	0.61571133E 02	0.58888125E 02	0.55343837E 02
R ONE	0.10449781E 02	0.10796472E 02	0.11230956E 02	0.11801169E 02	0.12604318E 02	0.13879759E 02
R TWO	0.15411800E 02	0.15727225E 02	0.16072851E 02	0.16447744E 02	0.16842371E 02	0.17222434E 02
T	0.87813171E-01	0.92926391E-01	0.99227970E-01	0.10725392E 00	0.11794392E 00	0.13312538E 00
X	0.42447301E 01	0.40641776E 01	0.38701606E 01	0.36601368E 01	0.34308084E 01	0.31779295E 01
Y	0.70499970E 01	0.70999970E 01	0.71499969E 01	0.71999969E 01	0.72499968E 01	0.72999968E 01
XFO	0.42568228E 01	0.40761844E 01	0.38821071E 01	0.36720704E 01	0.34428210E 01	0.31902118E 01
YFO	0.70922055E 01	0.71448820E 01	0.71981511E 01	0.72522792E 01	0.73077323E 01	0.73654165E 01
XFI	0.42326372E 01	0.40521707E 01	0.38582141E 01	0.36482031E 01	0.34187957E 01	0.31656471E 01
YFI	0.70077885E 01	0.70551119E 01	0.71018427E 01	0.71477146E 01	0.71922613E 01	0.72345771E 01
XM	0.42161120E 01	0.40366657E 01	0.38437668E 01	0.36348512E 01	0.34065737E 01	0.31545758E 01
YM	0.69501091E 01	0.69971499E 01	0.70436080E 01	0.70892190E 01	0.71335193E 01	0.71756074E 01
SOL	0.00000000E-38	0.00000000E-38	0.00000000E-38	0.00000000E-38	0.00000000E-38	0.00000000E-38
SOLH	0.00000000E-38	0.00000000E-38	0.00000000E-38	0.00000000E-38	0.00000000E-38	0.00000000E-38
SOF	0.47000000E 05	0.47000000E 05	0.47000000E 05	0.47000000E 05	0.47000000E 05	0.47000000E 05
EOL	0.00000000E-38	0.00000000E-38	0.00000000E-38	0.00000000E-38	0.00000000E-38	0.00000000E-38
EOLH	0.00000000E-38	0.00000000E-38	0.00000000E-38	0.00000000E-38	0.00000000E-38	0.00000000E-38
EOF	0.37903226E-02	0.37903226E-02	0.37903226E-02	0.37903226E-02	0.37903226E-02	0.37903226E-02
SOLP	-0.28112499E 05	-0.28853975E 05	-0.29680049E 05	-0.30605222E 05	-0.31643910E 05	-0.32802943E 05
SOLHP	-0.80216702E 04	-0.92199707E 04	-0.10813797E 05	-0.13027669E 05	-0.16288662E 05	-0.21511838E 05
SOFP	0.36685514E 05	0.36527926E 05	0.36382380E 05	0.36269120E 05	0.36231920E 05	0.36374195E 05
EOLP	-0.83181336E-03	-0.84452204E-03	-0.85625961E-03	-0.86539346E-03	-0.86839347E-03	-0.85691968E-03
EOLHP	0.42243317E-05	-0.27494129E-04	-0.71180077E-04	-0.13394048E-03	-0.22941703E-03	-0.38706402E-03
EOFP	0.29585092E-02	0.29458005E-02	0.29340629E-02	0.29249290E-02	0.29219291E-02	0.29334028E-02
SOLT	-0.20644025E 05	-0.21185014E 05	-0.21788200E 05	-0.22464702E 05	-0.23226208E 05	-0.24080519E 05
SOLHT	-0.58906028E 04	-0.67694384E 04	-0.79384359E 04	-0.95625090E 04	-0.11955661E 05	-0.15791761E 05
SOFT	0.26939501E 05	0.26819342E 05	0.26708399E 05	0.26622091E 05	0.26593747E 05	0.26702161E 05
EOLT	-0.25666271E-02	-0.25756265E-02	-0.25839356E-02	-0.25903997E-02	-0.25925225E-02	-0.25844028E-02
EOLHT	-0.19680253E-02	-0.19907325E-02	-0.20219986E-02	-0.20669093E-02	-0.21352340E-02	-0.22480967E-02
EOFT	0.12236954E-02	0.12146961E-02	0.12063870E-02	0.11999228E-02	0.11978000E-02	0.12059198E-02
SBL	0.19156256E 06	0.19156295E 06	0.19156354E 06	0.19156441E 06	0.19156588E 06	0.19156863E 06
SBLH	0.19156549E 06	0.19156637E 06	0.19156773E 06	0.19156968E 06	0.19157300E 06	0.19157930E 06
SFD	0.49499015E 06	0.49498923E 06	0.49498789E 06	0.49498599E 06	0.49498277E 06	0.49497625E 06
EDL	0.32488232E-01	0.32488163E-01	0.32488058E-01	0.32487925E-01	0.32487685E-01	0.32487182E-01
EDLH	0.32493751E-01	0.32494614E-01	0.32495948E-01	0.32497849E-01	0.32501104E-01	0.32507285E-01
EFD	0.36278549E-01	0.36278480E-01	0.36278379E-01	0.36278237E-01	0.36277996E-01	0.36277507E-01

151

SAMPLE CASE NO. INCONEL METAL-SHELL

(19)

DESIGN DATA FOR GEODESIC ISOTENSOID CONTOUR

CONTOUR INPUT DATA ABIG = 0.250000 C = -0.000000 V LEN = 16.000000

	79	80	81	82	83	84
Z	0.28963936E 00	0.27434098E 00	0.25821716E 00	0.24141879E 00	0.23714843E 00	0.21965934E 00
U	0.73499968E 00	0.73749967E 00	0.73999967E 00	0.74249966E 00	0.74312625E 00	0.74562625E 00
PHI	0.95388374E 01	0.90365078E 01	0.86126796E 01	0.83603842E 01	0.83462921E 01	0.78209759E 01
ALPHA	0.43670817E 02	0.46804297E 02	0.50763532E 02	0.55938424E 02	0.57495994E 02	0.65574670E 02
THETA	0.50368218E 02	0.47103833E 02	0.42970556E 02	0.37552963E 02	0.35964444E 02	0.27464682E 02
R ONE	0.16451166E 02	0.19291044E 02	0.26513716E 02	0.91159416E 02	0.16337533E 02	0.16142137E 02
R TWO	0.17478050E 02	0.17466859E 02	0.17242744E 02	0.16603890E 02	0.16337533E 02	0.16142137E 02
T	0.15693183E 00	0.17508103E 00	0.20129702E 00	0.24315009E 00	0.25799653E 00	0.36196420E 00
X	0.28963936E 01	0.27434098E 01	0.25821716E 01	0.24141879E 01	0.23714843E 01	0.21965934E 01
Y	0.73499967E 01	0.73749967E 01	0.73999966E 01	0.74249966E 01	0.74312625E 01	0.74562625E 01
XFO	0.29093966E 01	0.27571592E 01	0.25972441E 01	0.24318647E 01	0.23902091E 01	0.22212211E 01
YFO	0.74273777E 01	0.74614506E 01	0.74995101E 01	0.75452797E 01	0.75588945E 01	0.76355610E 01
XFI	0.28833905E 01	0.27296603E 01	0.25670991E 01	0.23965110E 01	0.23527595E 01	0.21719656E 01
YFI	0.72726157E 01	0.72885426E 01	0.73004831E 01	0.73047135E 01	0.73036304E 01	0.72769638E 01
XM	0.28734475E 01	0.27202365E 01	0.25581138E 01	0.23877870E 01	0.23440501E 01	0.21638010E 01
YM	0.72134453E 01	0.72292873E 01	0.72411597E 01	0.72453511E 01	0.72442659E 01	0.72175219E 01
SOL	0.00000000E-38	0.00000000E-38	0.00000000E-38	0.00000000E-38	0.00000000E-38	0.00000000E-38
SOLH	0.00000000E-38	0.00000000E-38	0.00000000E-38	0.00000000E-38	0.00000000E-38	0.00000000E-38
SOF	0.47000000E 05	0.47000000E 05	0.47000000E 05	0.47000000E 05	0.47000000E 05	0.47000000E 05
EOL	0.00000000E-38	0.00000000E-38	0.00000000E-38	0.00000000E-38	0.00000000E-38	0.00000000E-38
EOLH	0.00000000E-38	0.00000000E-38	0.00000000E-38	0.00000000E-38	0.00000000E-38	0.00000000E-38
EOF	0.37903226E-02	0.37903226E-02	0.37903226E-02	0.37903226E-02	0.37903226E-02	0.37903226E-02
SOLP	-0.34055468E 05	-0.34680765E 05	-0.35258020E 05	-0.35740995E 05	-0.35851692E 05	-0.36776280E 05
SOLHP	-0.31034878E 05	-0.39337465E 05	-0.52865182E 05	-0.78189496E 05	-0.88301630E 05	-0.17828655E 06
SOFP	0.36977858E 05	0.37690839E 05	0.39029152E 05	0.41773583E 05	0.42902312E 05	0.52970728E 05
EOLP	-0.80823722E-03	-0.75073871E-03	-0.64281023E-03	-0.42148521E-03	-0.33045871E-03	0.48151032E-03
EOLHP	-0.68254168E-03	-0.94451752E-03	-0.13754954E-02	-0.21878906E-02	-0.25130528E-02	-0.54071429E-02
EOFP	0.29820853E-02	0.30395838E-02	0.31475123E-02	0.33688373E-02	0.34598639E-02	0.42718328E-02
SOLT	-0.25015841E 05	-0.25494248E 05	-0.25955100E 05	-0.26386852E 05	-0.26500148E 05	-0.27475894E 05
SOLHT	-0.22797031E 05	-0.28917445E 05	-0.38916567E 05	-0.57725720E 05	-0.65269061E 05	-0.13319951E 06
SOFT	0.27162516E 05	0.27706990E 05	0.28731209E 05	0.30840590E 05	0.31711686E 05	0.39574913E 05
EOLT	-0.25499243E-02	-0.25091457E-02	-0.24324364E-02	-0.22744534E-02	-0.22092123E-02	-0.16202926E-02
EOLHT	-0.24598989E-02	-0.26480377E-02	-0.29583318E-02	-0.35459890E-02	-0.37822127E-02	-0.59098967E-02
EOFT	0.12403983E-02	0.12811768E-02	0.13578862E-02	0.15158691E-02	0.15811103E-02	0.21700299E-02
SBL	0.19157529E 06	0.19158512E 06	0.19161702E 06	0.19035629E 06	0.20808098E 07	0.16251507E 06
SBLH	0.19159482E 06	0.19161613E 06	0.19168490E 06	0.18898968E 06	0.42396268E 07	-0.15129105E 07
SFD	0.49495771E 06	0.49494374E 06	0.49490210E 06	0.49635949E 06	-0.17658408E 07	0.62715242E 06
EDL	0.32485806E-01	0.32484762E-01	0.32481642E-01	0.32590786E-01	-0.13683766E 00	0.42386589E-01
EDLH	0.32522595E-01	0.32543201E-01	0.32609553E-01	0.30015516E-01	0.39312848E 01	-0.63898725E-01
EFD	0.36276119E-01	0.36275072E-01	0.36271953E-01	0.36381105E-01	-0.13304735E 00	0.46176898E-01

20

DESIGN DATA FOR GEODESIC ISOTENSOID CONTOUR

ABIG = 0.250000 C = -0.000000 V LEN = 16.000000

CONTOUR INPUT DATA	85	86
Z	0.20061924E 00	0.20000000E 00
U	0.74812625E 00	0.74820367E 00
PHI	0.71393440E 01	0.71171738E 01
ALPHA	0.85497122E 02	0.90000031E 02
THETA	0.62030823E 01	0.16557455E 01
R ONE	0.16142153E 02	0.16142198E 02
R TWO	0.16142153E 02	0.16142198E 02
T	0.20873848E 01	0.20873848E 01
X	0.20061924E 01	0.20000000E 01
Y	0.74812624E 01	0.74820367E 01
XFO	0.21359054E 01	0.21293123E 01
YFO	0.85168629E 01	0.85176872E 01
XFI	0.18764793E 01	0.18706877E 01
YFI	0.64456620E 01	0.64463861E 01
XM	0.18690224E 01	0.18632537E 01
YM	0.63861272E 01	0.63868484E 01
SOL	0.00000000E-38	0.00000000E-38
SOLH	0.00000000E-38	0.00000000E-38
SOF	0.47000000E 05	0.47000000E 05
EOL	0.00000000E-38	0.00000000E-38
EOLH	0.00000000E-38	0.00000000E-38
EOF	0.37903226E-02	0.37903226E-02
SOLP	0.76329041E 03	0.81903312E-04
SOLHP	0.12299465E 06	0.12295103E 06
SOFP	-0.52857516E 04	-0.52512881E 04
EOLP	-0.42165918E-02	-0.42138118E-02
EOLHP	0.10073995E-01	0.10026332E-01
EOFP	-0.42627029E-03	-0.42349097E-03
SOLT	0.89754181E 03	0.96309903E-04
SOLHT	0.14462757E 06	0.14457781E 06
SOFT	-0.62154365E 04	-0.61749767E 04
EOLT	-0.50497761E-02	-0.50467475E-02
EOLHT	0.61070613E-02	0.60527317E-02
EOFT	-0.12594578E-02	-0.12564275E-02
SBL	0.60087198E 06	0.59793390E 06
SBLH	0.10716310E 07	0.10657097E 07
SFD	-0.20357422E 05	-0.19978895E 05
EDL	-0.61089367E-02	-0.60805947E-02
EDLH	0.88099980E 00	0.87540653E 00
EFD	-0.23136278E-02	-0.22902779E-02

156

HEAD PROPERTIES

ARC LENGTH = 0.14018640E 02

SURFACE AREA = 0.54506506E 03

CONTAINED VOLUME = 0.16154423E 04

WT. OF LINER = 0.94383587E 01

WT. OF FILAMENTS = 0.20850498E 01

WT. OF HEAD = 0.11523408E 02

15

CYLINDER PROPERTIES

CYLINDER LENGTH	= 0.10359266E 01
ARC LENGTH	= 0.10572881E 01
HOOP WRAP THICKNESS	= 0.97585699E-01
SURFACE AREA	= 0.65089131E 02
CONTAINED VOLUME	= 0.32046744E 03
WT. OF LINER	= 0.11661239E 01
WT. OF FILAMENTS	= 0.61758084E 00
WT. OF CYLINDER	= 0.17837047E 01

151

SAMPLE CASE NO. INCONEL METAL-SHELL

DESIGN DATA FOR GEODESIC ISOTENSOID CONTOUR

23

CYLINDER STRESSES AND STRAINS

	WRAP	ZERO PRESS. AND ROOM TEMP.	DESIGN TEMP. AND ZERO PRESS.	DESIGN TEMP. AND PRESSURE
SFC =	0.47000000E 05	0.43596397E 05	0.31788220E 05	0.49348961E 06
SLC =	0.00000000E-38	-0.15752468E 05	-0.11485878E 05	0.19210654E 06
SLHC =	0.00000000E-38	-0.24977442E 05	-0.14124145E 05	0.19283236E 06
SFHC =	0.30383127E 05	0.22219436E 05	0.12466416E 05	0.49385909E 06
EFC =	0.37903226E-02	0.35158384E-02	0.15868423E-02	0.36166165E-01
ELC =	0.00000000E-38	-0.27448417E-03	-0.22034802E-02	0.32375846E-01
ELHC =	0.00000000E-38	-0.65836214E-03	-0.23105246E-02	0.33743602E-01
EFHC =	0.24502522E-02	0.31319604E-02	0.14797979E-02	0.37533908E-01

159

24

VESSEL PROPERTIES

TOTAL ARC LENGTH = 0.29094568E 02

TOTAL SURFACE AREA = 0.11552192E 04

TOTAL CONTAINED VOLUME = 0.35513521E 04

TOTAL WEIGHT = 0.24830521E 02

PERFORMANCE FACTOR = 0.63574018E 06

SAMPLE CASE NO. INCONEL METAL-SHELL

DESIGN DATA FOR GEODESIC ISOTENSOID CONTOUR

25

SERVICE CYCLE 1

P NEW	TL NEW	TF NEW
0.0000	75.0000	75.0000

	1	2	3	4	5	6
SNL	-0.14860463E 05	-0.14861378E 05	-0.14864124E 05	-0.14868706E 05	-0.14875128E 05	-0.14883399E 05
SNLH	-0.61916505E 03	-0.61929758E 03	-0.61969538E 03	-0.62035938E 03	-0.62129114E 03	-0.62249281E 03
SNF	0.41127638E 05	0.41127287E 05	0.41126234E 05	0.41124479E 05	0.41122019E 05	0.41118849E 05
ENL	-0.47357758E-03	-0.47360586E-03	-0.47369073E-03	-0.47383230E-03	-0.47403074E-03	-0.47428633E-03
ENLH	0.11904417E-03	0.11904845E-03	0.11906131E-03	0.11908275E-03	0.11911277E-03	0.11915138E-03
ENF	0.33167450E-02	0.33167167E-02	0.33166318E-02	0.33164903E-02	0.33162918E-02	0.33160362E-02
DSYLN	0.00000000E-38	0.00000000E-38	0.00000000E-38	0.00000000E-38	0.00000000E-38	0.00000000E-38
DSYLHN	0.00000000E-38	0.00000000E-38	0.00000000E-38	0.00000000E-38	0.00000000E-38	0.00000000E-38

	7	8	9	10	11	12
SNL	-0.14893531E 05	-0.14905536E 05	-0.14919432E 05	-0.14935236E 05	-0.14952970E 05	-0.14972659E 05
SNLH	-0.62396722E 03	-0.62571783E 03	-0.62774884E 03	-0.63006505E 03	-0.63267210E 03	-0.63557628E 03
SNF	0.41114967E 05	0.41110369E 05	0.41105046E 05	0.41098993E 05	0.41092202E 05	0.41084663E 05
ENL	-0.47459936E-03	-0.47497026E-03	-0.47539951E-03	-0.47588765E-03	-0.47643534E-03	-0.47704328E-03
ENLH	0.11919860E-03	0.11925444E-03	0.11931892E-03	0.11939204E-03	0.11947385E-03	0.11956435E-03
ENF	0.33157232E-02	0.33153523E-02	0.33149230E-02	0.33144349E-02	0.33138872E-02	0.33132793E-02
DSYLN	0.00000000E-38	0.00000000E-38	0.00000000E-38	0.00000000E-38	0.00000000E-38	0.00000000E-38
DSYLHN	0.00000000E-38	0.00000000E-38	0.00000000E-38	0.00000000E-38	0.00000000E-38	0.00000000E-38

	13	14	15	16	17	18
SNL	-0.14994329E 05	-0.15018011E 05	-0.15043738E 05	-0.15071547E 05	-0.15101477E 05	-0.15133573E 05
SNLH	-0.63878481E 03	-0.64230566E 03	-0.64614773E 03	-0.65032086E 03	-0.65483597E 03	-0.65970500E 03
SNF	0.41076367E 05	0.41067303E 05	0.41057458E 05	0.41046818E 05	0.41035370E 05	0.41023096E 05
ENL	-0.47771231E-03	-0.47844331E-03	-0.47923726E-03	-0.48009527E-03	-0.48101854E-03	-0.48200834E-03
ENLH	0.11966357E-03	0.11977153E-03	0.11988827E-03	0.12001379E-03	0.12014814E-03	0.12029133E-03
ENF	0.33126102E-02	0.33118793E-02	0.33110853E-02	0.33102272E-02	0.33093040E-02	0.33083142E-02
DSYLN	0.00000000E-38	0.00000000E-38	0.00000000E-38	0.00000000E-38	0.00000000E-38	0.00000000E-38
DSYLHN	0.00000000E-38	0.00000000E-38	0.00000000E-38	0.00000000E-38	0.00000000E-38	0.00000000E-38

	19	20	21	22	23	24
SNL	-0.15167882E 05	-0.15204456E 05	-0.15243349E 05	-0.15284624E 05	-0.15328345E 05	-0.15374583E 05
SNLH	-0.66494104E 03	-0.67055851E 03	-0.67657315E 03	-0.68300224E 03	-0.68986461E 03	-0.69718087E 03
SNF	0.41009980E 05	0.40996002E 05	0.40981143E 05	0.40965378E 05	0.40948687E 05	0.40931040E 05
ENL	-0.48306609E-03	-0.48419334E-03	-0.48539171E-03	-0.48666301E-03	-0.48800918E-03	-0.48943228E-03
ENLH	0.12044338E-03	0.12060431E-03	0.12077413E-03	0.12095286E-03	0.12114050E-03	0.12133704E-03
ENF	0.33072564E-02	0.33061292E-02	0.33049308E-02	0.33036595E-02	0.33023134E-02	0.33008903E-02
DSYLN	0.00000000E-38	0.00000000E-38	0.00000000E-38	0.00000000E-38	0.00000000E-38	0.00000000E-38
DSYLHN	0.00000000E-38	0.00000000E-38	0.00000000E-38	0.00000000E-38	0.00000000E-38	0.00000000E-38

(6)

DESIGN DATA FOR GEODESIC ISOTENSO ID CONTOUR

SERVICE CYCLE 1

P NEW	TL NEW	TF NEW
0.0000	75.0000	75.0000

26

	25	26	27	28	29	30
SNL	-0.15423414E 05	-0.15474919E 05	-0.15529187E 05	-0.15586314E 05	-0.15646402E 05	-0.15709563E 05
SNLH	-0.70497347E 03	-0.71326711E 03	-0.72208871E 03	-0.73146775E 03	-0.74143655E 03	-0.75203054E 03
SNF	0.40912412E 05	0.40892771E 05	0.40872087E 05	0.40850324E 05	0.40827445E 05	0.40803410E 05
ENL	-0.49093455E-03	-0.49251842E-03	-0.49418648E-03	-0.49594155E-03	-0.49778663E-03	-0.49972496E-03
ENLH	0.12154247E-03	0.12175675E-03	0.12197985E-03	0.12221171E-03	0.12245226E-03	0.12270137E-03
ENF	0.32993880E-02	0.32978041E-02	0.32961361E-02	0.32943810E-02	0.32925359E-02	0.32905976E-02
DSYLN	0.00000000E-38	0.00000000E-38	0.00000000E-38	0.00000000E-38	0.00000000E-38	0.00000000E-38
DSYLHN	0.00000000E-38	0.00000000E-38	0.00000000E-38	0.00000000E-38	0.00000000E-38	0.00000000E-38

	31	32	33	34	35	36
SNL	-0.15775916E 05	-0.15845590E 05	-0.15918725E 05	-0.15995473E 05	-0.16075998E 05	-0.16160477E 05
SNLH	-0.76328858E 03	-0.77525352E 03	-0.78797243E 03	-0.80149731E 03	-0.81588559E 03	-0.83120078E 03
SNF	0.40778175E 05	0.40751693E 05	0.40723914E 05	0.40694784E 05	0.40664244E 05	0.40632229E 05
ENL	-0.50176006E-03	-0.50389568E-03	-0.50613590E-03	-0.50848513E-03	-0.51094811E-03	-0.51352994E-03
ENLH	0.12295893E-03	0.12322475E-03	0.12349864E-03	0.12378032E-03	0.12406948E-03	0.12436572E-03
ENF	0.32885625E-02	0.32864269E-02	0.32841866E-02	0.32818374E-02	0.32793745E-02	0.32767926E-02
DSYLN	0.00000000E-38	0.00000000E-38	0.00000000E-38	0.00000000E-38	0.00000000E-38	0.00000000E-38
DSYLHN	0.00000000E-38	0.00000000E-38	0.00000000E-38	0.00000000E-38	0.00000000E-38	0.00000000E-38

	37	38	39	40	41	42
SNL	-0.16249102E 05	-0.16342084E 05	-0.16439651E 05	-0.16542051E 05	-0.16649557E 05	-0.16762466E 05
SNLH	-0.84751338E 03	-0.86490187E 03	-0.88345368E 03	-0.90326640E 03	-0.92444957E 03	-0.94712614E 03
SNF	0.40598670E 05	0.40563495E 05	0.40526620E 05	0.40487958E 05	0.40447414E 05	0.40404880E 05
ENL	-0.51623624E-03	-0.51907299E-03	-0.52204674E-03	-0.52516464E-03	-0.52843440E-03	-0.53186448E-03
ENLH	0.12466859E-03	0.12497750E-03	0.12529177E-03	0.12561059E-03	0.12593296E-03	0.12625770E-03
ENF	0.32740863E-02	0.32712496E-02	0.32682758E-02	0.32651579E-02	0.32618882E-02	0.32584581E-02
DSYLN	0.00000000E-38	0.00000000E-38	0.00000000E-38	0.00000000E-38	0.00000000E-38	0.00000000E-38
DSYLHN	0.00000000E-38	0.00000000E-38	0.00000000E-38	0.00000000E-38	0.00000000E-38	0.00000000E-38

	43	44	45	46	47	48
SNL	-0.16881104E 05	-0.17005832E 05	-0.17137044E 05	-0.17275179E 05	-0.17420720E 05	-0.17574208E 05
SNLH	-0.97143497E 03	-0.99753300E 03	-0.10255984E 04	-0.10558345E 04	-0.10884738E 04	-0.11237836E 04
SNF	0.40360245E 05	0.40313381E 05	0.40264152E 05	0.40212405E 05	0.40157975E 05	0.40100675E 05
ENL	-0.53546413E-03	-0.53924345E-03	-0.54321357E-03	-0.54738666E-03	-0.55177622E-03	-0.55639711E-03
ENLH	0.12658339E-03	0.12690833E-03	0.12723047E-03	0.12754733E-03	0.12785597E-03	0.12815279E-03
ENF	0.32548584E-02	0.32510791E-02	0.32471090E-02	0.32429359E-02	0.32385463E-02	0.32339254E-02
DSYLN	0.00000000E-38	0.00000000E-38	0.00000000E-38	0.00000000E-38	0.00000000E-38	0.00000000E-38
DSYLHN	0.00000000E-38	0.00000000E-38	0.00000000E-38	0.00000000E-38	0.00000000E-38	0.00000000E-38

168

SAMPLE CASE NO. INCONEL METAL-SHELL

DESIGN DATA FOR GEODESIC ISOTENSOID CONTOUR

27

SERVICE CYCLE 1	P NEW	TL NEW	TF NEW
	0.0000	75.0000	75.0000

	49	50	51	52	53	54
SNL	-0.17736242E 05	-0.17907496E 05	-0.18088724E 05	-0.18280780E 05	-0.18484627E 05	-0.18701366E 05
SNLH	-0.11620731E 04	-0.12037009E 04	-0.12490862E 04	-0.12987208E 04	-0.13531869E 04	-0.14131772E 04
SNF	0.40040304E 05	0.39976631E 05	0.39909404E 05	0.39838339E 05	0.39763118E 05	0.39683381E 05
ENL	-0.56126584E-03	-0.56640072E-03	-0.57182223E-03	-0.57755323E-03	-0.58361945E-03	-0.59004981E-03
ENLH	0.12843345E-03	0.12869267E-03	0.12892399E-03	0.12911952E-03	0.12926951E-03	0.12936190E-03
ENF	0.32290567E-02	0.32239218E-02	0.32185003E-02	0.32127693E-02	0.32067031E-02	0.32002727E-02
DSYLN	0.00000000E-38	0.00000000E-38	0.00000000E-38	0.00000000E-38	0.00000000E-38	0.00000000E-38
DSYLHN	0.00000000E-38	0.00000000E-38	0.00000000E-38	0.00000000E-38	0.00000000E-38	0.00000000E-38

	55	56	57	58	59	60
SNL	-0.18932254E 05	-0.19178736E 05	-0.19442488E 05	-0.19725461E 05	-0.20029947E 05	-0.20358658E 05
SNLH	-0.14795235E 04	-0.15532316E 04	-0.16355306E 04	-0.17279364E 04	-0.18323412E 04	-0.19511357E 04
SNF	0.39598723E 05	0.39508680E 05	0.39412726E 05	0.39310256E 05	0.39200572E 05	0.39082869E 05
ENL	-0.59687715E-03	-0.60413867E-03	-0.61187690E-03	-0.62014063E-03	-0.62898605E-03	-0.63847833E-03
ENLH	0.12938161E-03	0.12930974E-03	0.12912229E-03	0.12878862E-03	0.12826914E-03	0.12751209E-03
ENF	0.31934454E-02	0.31861839E-02	0.31784456E-02	0.31701819E-02	0.31613365E-02	0.31518442E-02
DSYLN	0.00000000E-38	0.00000000E-38	0.00000000E-38	0.00000000E-38	0.00000000E-38	0.00000000E-38
DSYLHN	0.00000000E-38	0.00000000E-38	0.00000000E-38	0.00000000E-38	0.00000000E-38	0.00000000E-38

	61	62	63	64	65	66
SNL	-0.20714832E 05	-0.21102378E 05	-0.21526063E 05	-0.21991773E 05	-0.22506888E 05	-0.23080802E 05
SNLH	-0.20873839E 04	-0.22450764E 04	-0.24295046E 04	-0.26478340E 04	-0.29100044E 04	-0.32302029E 04
SNF	0.38956204E 05	0.38819478E 05	0.38671397E 05	0.38510439E 05	0.38334805E 05	0.38142383E 05
ENL	-0.64869324E-03	-0.65971954E-03	-0.67166149E-03	-0.68464197E-03	-0.69880602E-03	-0.71432396E-03
ENLH	0.12644895E-03	0.12498752E-03	0.12300173E-03	0.12031549E-03	0.11667720E-03	0.11171708E-03
ENF	0.31416293E-02	0.31306030E-02	0.31186611E-02	0.31056805E-02	0.30915165E-02	0.30759986E-02
DSYLN	0.00000000E-38	0.00000000E-38	0.00000000E-38	0.00000000E-38	0.00000000E-38	0.00000000E-38
DSYLHN	0.00000000E-38	0.00000000E-38	0.00000000E-38	0.00000000E-38	0.00000000E-38	0.00000000E-38

	67	68	69	70	71	72
SNL	-0.23725695E 05	-0.24457706E 05	-0.25298719E 05	-0.26279230E 05	-0.26834768E 05	-0.27442954E 05
SNLH	-0.36293750E 04	-0.41397413E 04	-0.48134489E 04	-0.57405258E 04	-0.63467501E 04	-0.70901945E 04
SNF	0.37930729E 05	0.37697127E 05	0.37438872E 05	0.37154208E 05	0.37002316E 05	0.36845281E 05
ENL	-0.73139279E-03	-0.75023163E-03	-0.77105868E-03	-0.79401540E-03	-0.80626485E-03	-0.81892896E-03
ENLH	0.10487344E-03	0.95257849E-04	0.81392893E-04	0.60659705E-04	0.46301053E-04	0.28008458E-04
ENF	0.30589298E-02	0.30400909E-02	0.30192638E-02	0.29963071E-02	0.29840577E-02	0.29713936E-02
DSYLN	0.00000000E-38	0.00000000E-38	0.00000000E-38	0.00000000E-38	0.00000000E-38	0.00000000E-38
DSYLHN	0.00000000E-38	0.00000000E-38	0.00000000E-38	0.00000000E-38	0.00000000E-38	0.00000000E-38

16.2

28

DESIGN DATA FOR GEODESIC ISOTENSOID CONTOUR

SERVICE CYCLE 1

P NEW	TL NEW	TF NEW
0.0000	75.0000	75.0000

	73	74	75	76	77	78
SNL	-0.28112499E 05	-0.28853975E 05	-0.29680049E 05	-0.30605222E 05	-0.31643910E 05	-0.32802943E 05
SNLH	-0.80216702E 04	-0.92199707E 04	-0.10813797E 05	-0.13027669E 05	-0.16288662E 05	-0.21511838E 05
SNF	0.36685514E 05	0.36527926E 05	0.36382380E 05	0.36269120E 05	0.36231920E 05	0.36374195E 05
ENL	-0.83181336E-03	-0.84452204E-03	-0.85625961E-03	-0.86539346E-03	-0.86839347E-03	-0.85691968E-03
ENLH	0.42243317E-05	-0.27494129E-04	-0.71180077E-04	-0.13394048E-03	-0.22941703E-03	-0.38706402E-03
ENF	0.29585092E-02	0.29458005E-02	0.29340629E-02	0.29249290E-02	0.29219291E-02	0.29334028E-02
DSYLN	0.00000000E-38	0.00000000E-38	0.00000000E-38	0.00000000E-38	0.00000000E-38	0.00000000E-38
DSYLHN	0.00000000E-38	0.00000000E-38	0.00000000E-38	0.00000000E-38	0.00000000E-38	0.00000000E-38

	79	80	81	82	83	84
SNL	-0.34055468E 05	-0.34680765E 05	-0.35258020E 05	-0.35740995E 05	-0.35851692E 05	-0.36776280E 05
SNLH	-0.31034878E 05	-0.39337465E 05	-0.52865182E 05	-0.78189496E 05	-0.88301630E 05	-0.17828655E 06
SNF	0.36977858E 05	0.37690839E 05	0.39029152E 05	0.41773583E 05	0.42902312E 05	0.52970728E 05
ENL	-0.80823722E-03	-0.75073871E-03	-0.64281023E-03	-0.42148521E-03	-0.33045871E-03	0.48151032E-03
ENLH	-0.68254168E-03	-0.94451752E-03	-0.13754954E-02	-0.21878906E-02	-0.25130528E-02	-0.54071429E-02
ENF	0.29820853E-02	0.30395838E-02	0.31475123E-02	0.33688373E-02	0.34598639E-02	0.42718328E-02
DSYLN	0.00000000E-38	0.00000000E-38	0.00000000E-38	0.00000000E-38	0.00000000E-38	0.00000000E-38
DSYLHN	0.00000000E-38	0.00000000E-38	0.00000000E-38	0.00000000E-38	0.00000000E-38	0.00000000E-38

	85	86
SNL	0.76329041E 03	0.81903312E-04
SNLH	0.12299465E 06	0.12295103E 06
SNF	-0.52857516E 04	-0.52512881E 04
ENL	-0.42165918E-02	-0.42138118E-02
ENLH	0.10073995E-01	0.10026332E-01
ENF	-0.42627029E-03	-0.42349097E-03
DSYLN	0.00000000E-38	0.00000000E-38
DSYLHN	0.49946475E 04	0.49510254E 04

164

29

DESIGN DATA FOR GEODESIC ISOTENSOID CONTOUR

SERVICE CYCLE	P NEW	TL NEW	TF NEW
1	0.0000	75.0000	75.0000

CYLINDER PROPERTIES

SNL	=	-0.15752468E 05
SNLH	=	-0.24977442E 05
SNF	=	0.43596397E 05
SNFH	=	0.22219436E 05
ENL	=	-0.27448417E-03
ENLH	=	-0.65836214E-03
ENF	=	0.35158384E-02
ENFH	=	0.31319604E-02
DSYLHN	=	0.00000000E-38
DSYLHN	=	0.00000000E-38

165

DESIGN DATA FOR GEODESIC ISOTENSOID CONTOUR

SERVICE CYCLE 1

P NEW	TL NEW	TF NEW
1000.0000	75.0000	75.0000

30

	1	2	3	4	5	6
SNL	0.59575646E 05	0.59576657E 05	0.59579700E 05	0.59584777E 05	0.59591897E 05	0.59601067E 05
SNLH	0.43782486E 05	0.43782635E 05	0.43783074E 05	0.43783811E 05	0.43784846E 05	0.43786177E 05
SNF	0.65751489E 05	0.65751877E 05	0.65753042E 05	0.65754988E 05	0.65757716E 05	0.65761229E 05
ENL	0.15122169E-02	0.15122482E-02	0.15123422E-02	0.15124991E-02	0.15127191E-02	0.15130025E-02
ENLH	0.85501770E-03	0.85501304E-03	0.85499874E-03	0.85497501E-03	0.85494180E-03	0.85489894E-03
ENF	0.53025394E-02	0.53025707E-02	0.53026646E-02	0.53028216E-02	0.53030415E-02	0.53033250E-02
DSYLN	0.00000000E-38	0.00000000E-38	0.00000000E-38	0.00000000E-38	0.00000000E-38	0.00000000E-38
DSYLHN	0.00000000E-38	0.00000000E-38	0.00000000E-38	0.00000000E-38	0.00000000E-38	0.00000000E-38

	7	8	9	10	11	12
SNL	0.59612300E 05	0.59625612E 05	0.59641019E 05	0.59658543E 05	0.59678204E 05	0.59700037E 05
SNLH	0.43787811E 05	0.43789751E 05	0.43792005E 05	0.43794573E 05	0.43797468E 05	0.43800688E 05
SNF	0.65765533E 05	0.65770633E 05	0.65776533E 05	0.65783245E 05	0.65790775E 05	0.65799134E 05
ENL	0.15133495E-02	0.15137608E-02	0.15142367E-02	0.15147779E-02	0.15153851E-02	0.15160593E-02
ENLH	0.85484657E-03	0.85478464E-03	0.85471322E-03	0.85463211E-03	0.85454157E-03	0.85444120E-03
ENF	0.53036720E-02	0.53040833E-02	0.53045591E-02	0.53051004E-02	0.53057077E-02	0.53063817E-02
DSYLN	0.00000000E-38	0.00000000E-38	0.00000000E-38	0.00000000E-38	0.00000000E-38	0.00000000E-38
DSYLHN	0.00000000E-38	0.00000000E-38	0.00000000E-38	0.00000000E-38	0.00000000E-38	0.00000000E-38

	13	14	15	16	17	18
SNL	0.59724065E 05	0.59750322E 05	0.59778851E 05	0.59809685E 05	0.59842875E 05	0.59878463E 05
SNLH	0.43804243E 05	0.43808153E 05	0.43812410E 05	0.43817038E 05	0.43822047E 05	0.43827444E 05
SNF	0.65808331E 05	0.65818384E 05	0.65829300E 05	0.65841096E 05	0.65853790E 05	0.65867399E 05
ENL	0.15168011E-02	0.15176115E-02	0.15184920E-02	0.15194433E-02	0.15204671E-02	0.15215646E-02
ENLH	0.85433109E-03	0.85421160E-03	0.85408205E-03	0.85394289E-03	0.85379399E-03	0.85363515E-03
ENF	0.53071234E-02	0.53079341E-02	0.53088145E-02	0.53097658E-02	0.53107895E-02	0.53118870E-02
DSYLN	0.00000000E-38	0.00000000E-38	0.00000000E-38	0.00000000E-38	0.00000000E-38	0.00000000E-38
DSYLHN	0.00000000E-38	0.00000000E-38	0.00000000E-38	0.00000000E-38	0.00000000E-38	0.00000000E-38

	19	20	21	22	23	24
SNL	0.59916507E 05	0.59957062E 05	0.60000193E 05	0.60045960E 05	0.60094443E 05	0.60145714E 05
SNLH	0.43833255E 05	0.43839485E 05	0.43846153E 05	0.43853282E 05	0.43860894E 05	0.43869009E 05
SNF	0.65881943E 05	0.65897443E 05	0.65913922E 05	0.65931402E 05	0.65949913E 05	0.65969480E 05
ENL	0.15227375E-02	0.15239875E-02	0.15253164E-02	0.15267260E-02	0.15282188E-02	0.15297968E-02
ENLH	0.85346671E-03	0.85328829E-03	0.85309992E-03	0.85290174E-03	0.85269373E-03	0.85247588E-03
ENF	0.53130599E-02	0.53143099E-02	0.53156388E-02	0.53170485E-02	0.53185414E-02	0.53201194E-02
DSYLN	0.00000000E-38	0.00000000E-38	0.00000000E-38	0.00000000E-38	0.00000000E-38	0.00000000E-38
DSYLHN	0.00000000E-38	0.00000000E-38	0.00000000E-38	0.00000000E-38	0.00000000E-38	0.00000000E-38

6

DESIGN DATA FOR GEODESIC ISOTENSOID CONTOUR

31

SERVICE CYCLE 1

P NEW	TL NEW	TF NEW
1000.0000	75.0000	75.0000

	25	26	27	28	29	30
SNL	0.60199863E 05	0.60256976E 05	0.60317153E 05	0.60380502E 05	0.60447133E 05	0.60517172E 05
SNLH	0.43877651E 05	0.43886852E 05	0.43896631E 05	0.43907031E 05	0.43918091E 05	0.43929840E 05
SNF	0.65990137E 05	0.66011915E 05	0.66034851E 05	0.66058983E 05	0.66084353E 05	0.66111007E 05
ENL	0.15314627E-02	0.15332190E-02	0.15350687E-02	0.15370149E-02	0.15390608E-02	0.15412103E-02
ENLH	0.85224810E-03	0.85201060E-03	0.85176311E-03	0.85150599E-03	0.85123943E-03	0.85096324E-03
ENF	0.53217852E-02	0.53235415E-02	0.53253911E-02	0.53273374E-02	0.53293832E-02	0.53315328E-02
DSYLN	0.00000000E-38	0.00000000E-38	0.00000000E-38	0.00000000E-38	0.00000000E-38	0.00000000E-38
DSYLHN	0.00000000E-38	0.00000000E-38	0.00000000E-38	0.00000000E-38	0.00000000E-38	0.00000000E-38

	31	32	33	34	35	36
SNL	0.60590750E 05	0.60668012E 05	0.60749116E 05	0.60834223E 05	0.60923516E 05	0.61017194E 05
SNLH	0.43942325E 05	0.43955596E 05	0.43969701E 05	0.43984698E 05	0.44000658E 05	0.44017644E 05
SNF	0.66138991E 05	0.66168355E 05	0.66199159E 05	0.66231461E 05	0.66265330E 05	0.66300831E 05
ENL	0.15434670E-02	0.15458351E-02	0.15483194E-02	0.15509245E-02	0.15536556E-02	0.15565186E-02
ENLH	0.85067765E-03	0.85038297E-03	0.85007926E-03	0.84976690E-03	0.84944641E-03	0.84911800E-03
ENF	0.53337896E-02	0.53361577E-02	0.53386418E-02	0.53412468E-02	0.53439782E-02	0.53468412E-02
DSYLN	0.00000000E-38	0.00000000E-38	0.00000000E-38	0.00000000E-38	0.00000000E-38	0.00000000E-38
DSYLHN	0.00000000E-38	0.00000000E-38	0.00000000E-38	0.00000000E-38	0.00000000E-38	0.00000000E-38

	37	38	39	40	41	42
SNL	0.61115471E 05	0.61218581E 05	0.61326771E 05	0.61440324E 05	0.61559538E 05	0.61684745E 05
SNLH	0.44035733E 05	0.44055017E 05	0.44075592E 05	0.44097566E 05	0.44121061E 05	0.44146209E 05
SNF	0.66338043E 05	0.66377049E 05	0.66417939E 05	0.66460812E 05	0.66505771E 05	0.66552937E 05
ENL	0.15595196E-02	0.15626653E-02	0.15659629E-02	0.15694203E-02	0.15730461E-02	0.15768498E-02
ENLH	0.84878214E-03	0.84843964E-03	0.84809123E-03	0.84773783E-03	0.84738048E-03	0.84702042E-03
ENF	0.53498421E-02	0.53529878E-02	0.53562854E-02	0.53597428E-02	0.53633687E-02	0.53671723E-02
DSYLN	0.00000000E-38	0.00000000E-38	0.00000000E-38	0.00000000E-38	0.00000000E-38	0.00000000E-38
DSYLHN	0.00000000E-38	0.00000000E-38	0.00000000E-38	0.00000000E-38	0.00000000E-38	0.00000000E-38

	43	44	45	46	47	48
SNL	0.61816306E 05	0.61954618E 05	0.62100123E 05	0.62253303E 05	0.62414697E 05	0.62584903E 05
SNLH	0.44173167E 05	0.44202111E 05	0.44233238E 05	0.44266774E 05	0.44302971E 05	0.44342132E 05
SNF	0.66602434E 05	0.66654401E 05	0.66708993E 05	0.66766373E 05	0.66826732E 05	0.66890271E 05
ENL	0.15808415E-02	0.15850324E-02	0.15894349E-02	0.15940625E-02	0.15989302E-02	0.16040544E-02
ENLH	0.84665932E-03	0.84629910E-03	0.84594203E-03	0.84559084E-03	0.84524868E-03	0.84491969E-03
ENF	0.53711639E-02	0.53753549E-02	0.53797575E-02	0.53843849E-02	0.53892526E-02	0.53943767E-02
DSYLN	0.00000000E-38	0.00000000E-38	0.00000000E-38	0.00000000E-38	0.00000000E-38	0.00000000E-38
DSYLHN	0.00000000E-38	0.00000000E-38	0.00000000E-38	0.00000000E-38	0.00000000E-38	0.00000000E-38

DESIGN DATA FOR GEODESIC ISOTENSO ID CONTOUR

SERVICE CYCLE 1

P NEW	TL NEW	TF NEW
1000.0000	75.0000	75.0000

32

	49	50	51	52	53	54
SNL	0.62764586E 05	0.62954496E 05	0.63155462E 05	0.63368437E 05	0.63594488E 05	0.63834834E 05
SNLH	0.44384596E 05	0.44430763E 05	0.44481098E 05	0.44536145E 05	0.44596551E 05	0.44663084E 05
SNF	0.66957223E 05	0.67027828E 05	0.67102377E 05	0.67181181E 05	0.67264593E 05	0.67353014E 05
ENL	0.16094533E-02	0.16151475E-02	0.16211595E-02	0.16275147E-02	0.16342415E-02	0.16413722E-02
ENLH	0.84460857E-03	0.84432128E-03	0.84406495E-03	0.84384833E-03	0.84368225E-03	0.84358007E-03
ENF	0.53997760E-02	0.54054700E-02	0.54114820E-02	0.54178371E-02	0.54245639E-02	0.54316946E-02
DSYLN	0.00000000E-38	0.00000000E-38	0.00000000E-38	0.00000000E-38	0.00000000E-38	0.00000000E-38
DSYLHN	0.00000000E-38	0.00000000E-38	0.00000000E-38	0.00000000E-38	0.00000000E-38	0.00000000E-38

	55	56	57	58	59	60
SNL	0.64090868E 05	0.64364195E 05	0.64656678E 05	0.64970472E 05	0.65308122E 05	0.65672634E 05
SNLH	0.44736667E 05	0.44818413E 05	0.44909685E 05	0.45012172E 05	0.45127961E 05	0.45259706E 05
SNF	0.67446894E 05	0.67546741E 05	0.67653146E 05	0.67766776E 05	0.67888403E 05	0.68018927E 05
ENL	0.16489431E-02	0.16569953E-02	0.16655764E-02	0.16747401E-02	0.16845488E-02	0.16950748E-02
ENLH	0.84355856E-03	0.84363860E-03	0.84384673E-03	0.84421725E-03	0.84479375E-03	0.84563362E-03
ENF	0.54392656E-02	0.54473178E-02	0.54558989E-02	0.54650626E-02	0.54748712E-02	0.54853973E-02
DSYLN	0.00000000E-38	0.00000000E-38	0.00000000E-38	0.00000000E-38	0.00000000E-38	0.00000000E-38
DSYLHN	0.00000000E-38	0.00000000E-38	0.00000000E-38	0.00000000E-38	0.00000000E-38	0.00000000E-38

	61	62	63	64	65	66
SNL	0.66067604E 05	0.66497362E 05	0.66967192E 05	0.67483629E 05	0.68054850E 05	0.68691269E 05
SNLH	0.45410812E 05	0.45585703E 05	0.45790246E 05	0.46032381E 05	0.46323147E 05	0.46678265E 05
SNF	0.68159386E 05	0.68311003E 05	0.68475207E 05	0.68653692E 05	0.68848454E 05	0.69061827E 05
ENL	0.17064022E-02	0.17186293E-02	0.17318716E-02	0.17462657E-02	0.17619721E-02	0.17791797E-02
ENLH	0.84681315E-03	0.84843446E-03	0.85063743E-03	0.85361705E-03	0.85765292E-03	0.86315473E-03
ENF	0.54967246E-02	0.55089518E-02	0.55221941E-02	0.55365881E-02	0.55522947E-02	0.55695022E-02
DSYLN	0.00000000E-38	0.00000000E-38	0.00000000E-38	0.00000000E-38	0.00000000E-38	0.00000000E-38
DSYLHN	0.00000000E-38	0.00000000E-38	0.00000000E-38	0.00000000E-38	0.00000000E-38	0.00000000E-38

	67	68	69	70	71	72
SNL	0.69406401E 05	0.70218137E 05	0.71150753E 05	0.72238060E 05	0.72854086E 05	0.73528493E 05
SNLH	0.47120972E 05	0.47686999E 05	0.48434183E 05	0.49462376E 05	0.50134714E 05	0.50959237E 05
SNF	0.69296526E 05	0.69555562E 05	0.69841935E 05	0.70157586E 05	0.70326008E 05	0.70500125E 05
ENL	0.17981071E-02	0.18189970E-02	0.18420916E-02	0.18675474E-02	0.18811296E-02	0.18951714E-02
ENLH	0.87074567E-03	0.88141095E-03	0.89678917E-03	0.91978512E-03	0.93571062E-03	0.95599915E-03
ENF	0.55884295E-02	0.56093195E-02	0.56324141E-02	0.56578698E-02	0.56714522E-02	0.56854939E-02
DSYLN	0.00000000E-38	0.00000000E-38	0.00000000E-38	0.00000000E-38	0.00000000E-38	0.00000000E-38
DSYLHN	0.00000000E-38	0.00000000E-38	0.00000000E-38	0.00000000E-38	0.00000000E-38	0.00000000E-38

168

DESIGN DATA FOR GEODESIC ISOTENSOID CONTOUR

33

SERVICE CYCLE 1

P NEW	TL NEW	TF NEW
1000.0000	75.0000	75.0000

	73	74	75	76	77	78
SNL	0.74270931E 05	0.75093130E 05	0.76009111E 05	0.77034950E 05	0.78186573E 05	0.79471352E 05
SNLH	0.51992304E 05	0.53321289E 05	0.55088951E 05	0.57544264E 05	0.61160884E 05	0.66953522E 05
SNF	0.70677265E 05	0.70851980E 05	0.71013325E 05	0.71138843E 05	0.71179964E 05	0.71021930E 05
ENL	0.19094569E-02	0.19235470E-02	0.19365586E-02	0.19466811E-02	0.19499973E-02	0.19372526E-02
ENLH	0.98237851E-03	0.10175575E-02	0.10660100E-02	0.11356170E-02	0.12415090E-02	0.14163494E-02
ENF	0.56997794E-02	0.57138694E-02	0.57268810E-02	0.57370034E-02	0.57403196E-02	0.57275749E-02
DSYLN	0.00000000E-38	0.00000000E-38	0.00000000E-38	0.00000000E-38	0.00000000E-38	0.00000000E-38
DSYLHN	0.00000000E-38	0.00000000E-38	0.00000000E-38	0.00000000E-38	0.00000000E-38	0.00000000E-38

	79	80	81	82	83	84
SNL	0.80858558E 05	0.81551515E 05	0.82190855E 05	0.76869806E 05	0.70800302E 05	0.67848626E 05
SNLH	0.77513825E 05	0.86721332E 05	0.10172312E 06	0.11699657E 06	-0.24798631E 05	-0.18868558E 06
SNF	0.70351819E 05	0.69560930E 05	0.68076459E 05	0.71875608E 05	0.78196761E 05	0.96026977E 05
ENL	0.18832112E-02	0.18194299E-02	0.16997146E-02	0.13851871E-02	0.25158679E-02	0.39537885E-02
ENLH	0.17440272E-02	0.20345610E-02	0.25125086E-02	0.30549782E-02	-0.14622812E-02	-0.67213445E-02
ENF	0.56735338E-02	0.56097524E-02	0.54900370E-02	0.57964200E-02	0.63061903E-02	0.77441110E-02
DSYLN	0.00000000E-38	0.00000000E-38	0.00000000E-38	0.00000000E-38	0.00000000E-38	0.00000000E-38
DSYLHN	0.00000000E-38	0.00000000E-38	0.00000000E-38	0.00000000E-38	0.00000000E-38	0.00000000E-38

	85	86
SNL	0.13468764E 06	0.13451831E 06
SNLH	0.16186286E 06	0.16152139E 06
SNF	-0.11751603E 04	-0.11533126E 04
ENL	-0.38850912E-02	-0.38833318E-02
ENLH	0.47324484E-01	0.47001875E-01
ENF	-0.94770990E-04	-0.93009078E-04
DSYLN	0.16687641E 05	0.16518311E 05
DSYLHN	0.38868208E 05	0.38570367E 05

169

34

DESIGN DATA FOR GEODESIC ISOTENSO ID CONTOUR

SERVICE CYCLE	P NEW	TL NEW	TF NEW
1	1000.0000	75.0000	75.0000

CYLINDER PROPERTIES

SNL	=	0.61546107E 05
SNLH	=	0.97588800E 05
SNF	=	0.60298144E 05
SNFH	=	0.62279298E 05
ENL	=	0.10724308E-02
ENLH	=	0.25722719E-02
ENF	=	0.48627535E-02
ENFH	=	0.63625943E-02
DSYLHN	=	0.00000000E-38
DSYLHN	=	0.00000000E-38

170

DESIGN DATA FOR GEODESIC ISOTENSOID CONTOUR

35

SERVICE CYCLE 1	P NEW	TL NEW	TF NEW
	2000.0000	75.0000	75.0000

	1	2	3	4	5	6
SNL	0.12076115E 06	0.12076152E 06	0.12076262E 06	0.12076446E 06	0.12076703E 06	0.12077034E 06
SNLH	0.87632047E 05	0.87632286E 05	0.87632986E 05	0.87634164E 05	0.87635819E 05	0.87637943E 05
SNF	0.12704755E 06	0.12705322E 06	0.12707028E 06	0.12709874E 06	0.12713861E 06	0.12718994E 06
ENL	0.64554531E-02	0.64559095E-02	0.64572860E-02	0.64595826E-02	0.64627975E-02	0.64669382E-02
ENLH	-0.11423603E-04	-0.11646189E-04	-0.12313947E-04	-0.13430603E-04	-0.14991499E-04	-0.17004088E-04
ENF	0.10245770E-01	0.10246227E-01	0.10247603E-01	0.10249898E-01	0.10253114E-01	0.10257253E-01
DSYLN	0.27611514E 04	0.27615186E 04	0.27626182E 04	0.27644551E 04	0.27670264E 04	0.27703379E 04
DSYLHN	0.00000000E-38	0.00000000E-38	0.00000000E-38	0.00000000E-38	0.00000000E-38	0.00000000E-38

	7	8	9	10	11	12
SNL	0.12077439E 06	0.12077918E 06	0.12078472E 06	0.12079102E 06	0.12079806E 06	0.12080587E 06
SNLH	0.87640550E 05	0.87643646E 05	0.87647237E 05	0.87651325E 05	0.87655933E 05	0.87661051E 05
SNF	0.12725273E 06	0.12732706E 06	0.12741297E 06	0.12751051E 06	0.12761975E 06	0.12774079E 06
ENL	0.64719990E-02	0.64779967E-02	0.64849220E-02	0.64927898E-02	0.65015983E-02	0.65113623E-02
ENLH	-0.19461848E-04	-0.22375956E-04	-0.25739893E-04	-0.29560179E-04	-0.33837743E-04	-0.38578175E-04
ENF	0.10262317E-01	0.10268311E-01	0.10275239E-01	0.10283106E-01	0.10291915E-01	0.10301676E-01
DSYLN	0.27743867E 04	0.27791846E 04	0.27847227E 04	0.27910156E 04	0.27980615E 04	0.28058721E 04
DSYLHN	0.00000000E-38	0.00000000E-38	0.00000000E-38	0.00000000E-38	0.00000000E-38	0.00000000E-38

	13	14	15	16	17	18
SNL	0.12081444E 06	0.12082379E 06	0.12083392E 06	0.12084483E 06	0.12085654E 06	0.12086905E 06
SNLH	0.87666692E 05	0.87672895E 05	0.87679636E 05	0.87686953E 05	0.87694863E 05	0.87703367E 05
SNF	0.12787370E 06	0.12801858E 06	0.12817554E 06	0.12834469E 06	0.12852618E 06	0.12872012E 06
ENL	0.65220799E-02	0.65337624E-02	0.65464191E-02	0.65600630E-02	0.65746997E-02	0.65903366E-02
ENLH	-0.43781474E-04	-0.49452297E-04	-0.55595301E-04	-0.62214211E-04	-0.69314614E-04	-0.76899305E-04
ENF	0.10312395E-01	0.10324079E-01	0.10336737E-01	0.10350378E-01	0.10365014E-01	0.10380655E-01
DSYLN	0.28144443E 04	0.28237910E 04	0.28339170E 04	0.28448301E 04	0.28565410E 04	0.28690508E 04
DSYLHN	0.00000000E-38	0.00000000E-38	0.00000000E-38	0.00000000E-38	0.00000000E-38	0.00000000E-38

	19	20	21	22	23	24
SNL	0.12088238E 06	0.12089653E 06	0.12091152E 06	0.12092736E 06	0.12094406E 06	0.12096163E 06
SNLH	0.87712513E 05	0.87722297E 05	0.87732748E 05	0.87743896E 05	0.87755775E 05	0.87768410E 05
SNF	0.12892668E 06	0.12914600E 06	0.12937829E 06	0.12962370E 06	0.12988244E 06	0.13015472E 06
ENL	0.66069942E-02	0.66246856E-02	0.66434182E-02	0.66632070E-02	0.66840742E-02	0.67060329E-02
ENLH	-0.84975734E-04	-0.93551353E-04	-0.10262895E-03	-0.11221599E-03	-0.12232177E-03	-0.13295282E-03
ENF	0.10397313E-01	0.10415000E-01	0.10433733E-01	0.10453524E-01	0.10474390E-01	0.10496348E-01
DSYLN	0.28823789E 04	0.28965342E 04	0.29115225E 04	0.29273564E 04	0.29440566E 04	0.29616289E 04
DSYLHN	0.00000000E-38	0.00000000E-38	0.00000000E-38	0.00000000E-38	0.00000000E-38	0.00000000E-38

DESIGN DATA FOR GEODESIC ISOTENSOID CONTOUR

36

SERVICE CYCLE 1

P NEW	TL NEW	TF NEW
2000.0000	75.0000	75.0000

	25	26	27	28	29	30
SNL	0.12098009E 06	0.12099946E 06	0.12101975E 06	0.12104099E 06	0.12106318E 06	0.12108636E 06
SNLH	0.87781830E 05	0.87796081E 05	0.87811185E 05	0.87827202E 05	0.87844186E 05	0.87862171E 05
SNF	0.13044078E 06	0.13074086E 06	0.13105522E 06	0.13138416E 06	0.13172793E 06	0.13208691E 06
ENL	0.67291036E-02	0.67533031E-02	0.67786556E-02	0.68051796E-02	0.68329051E-02	0.68618525E-02
ENLH	-0.14411844E-03	-0.15582424E-03	-0.16808417E-03	-0.18090475E-03	-0.19429903E-03	-0.20827632E-03
ENF	0.10519418E-01	0.10543618E-01	0.10568969E-01	0.10595496E-01	0.10623220E-01	0.10652170E-01
DSYLN	0.29800937E 04	0.29994619E 04	0.30197549E 04	0.30409883E 04	0.30631836E 04	0.30863604E 04
DSYLHN	0.00000000E-38	0.00000000E-38	0.00000000E-38	0.00000000E-38	0.00000000E-38	0.00000000E-38

	31	32	33	34	35	36
SNL	0.12111054E 06	0.12113575E 06	0.12116202E 06	0.12118936E 06	0.12121781E 06	0.12124741E 06
SNLH	0.87881216E 05	0.87901394E 05	0.87922759E 05	0.87945391E 05	0.87969383E 05	0.87994811E 05
SNF	0.13246140E 06	0.13285177E 06	0.13325844E 06	0.13368178E 06	0.13412227E 06	0.13458036E 06
ENL	0.68920515E-02	0.69235377E-02	0.69563296E-02	0.69904719E-02	0.70259925E-02	0.70629381E-02
ENLH	-0.22285152E-03	-0.23803767E-03	-0.25384501E-03	-0.27029123E-03	-0.28739031E-03	-0.30516088E-03
ENF	0.10682371E-01	0.10713852E-01	0.10746648E-01	0.10780789E-01	0.10816312E-01	0.10853255E-01
DSYLN	0.31105410E 04	0.31357529E 04	0.31620156E 04	0.31893604E 04	0.32178145E 04	0.32474111E 04
DSYLHN	0.00000000E-38	0.00000000E-38	0.00000000E-38	0.00000000E-38	0.00000000E-38	0.00000000E-38

	37	38	39	40	41	42
SNL	0.12127818E 06	0.12131017E 06	0.12134340E 06	0.12137792E 06	0.12141378E 06	0.12145102E 06
SNLH	0.88021771E 05	0.88050389E 05	0.88080777E 05	0.88113077E 05	0.88147437E 05	0.88184020E 05
SNF	0.13505657E 06	0.13555147E 06	0.13606562E 06	0.13659967E 06	0.13715429E 06	0.13773022E 06
ENL	0.71013421E-02	0.71412548E-02	0.71827173E-02	0.72257873E-02	0.72705150E-02	0.73169600E-02
ENLH	-0.32361969E-03	-0.34278724E-03	-0.36267936E-03	-0.38332399E-03	-0.40473975E-03	-0.42695366E-03
ENF	0.10891659E-01	0.10931570E-01	0.10973034E-01	0.11016102E-01	0.11060829E-01	0.11107276E-01
DSYLN	0.32781826E 04	0.33101660E 04	0.33433965E 04	0.33779199E 04	0.34137803E 04	0.34510225E 04
DSYLHN	0.00000000E-38	0.00000000E-38	0.00000000E-38	0.00000000E-38	0.00000000E-38	0.00000000E-38

	43	44	45	46	47	48
SNL	0.12148970E 06	0.12152987E 06	0.12157160E 06	0.12161495E 06	0.12165999E 06	0.12170680E 06
SNLH	0.88223020E 05	0.88264652E 05	0.88309161E 05	0.88356814E 05	0.88407913E 05	0.88462822E 05
SNF	0.13832826E 06	0.13894922E 06	0.13959409E 06	0.14026381E 06	0.14095953E 06	0.14168240E 06
ENL	0.73651839E-02	0.74152667E-02	0.74672699E-02	0.75212829E-02	0.75773876E-02	0.76356810E-02
ENLH	-0.44999085E-03	-0.47388393E-03	-0.49865711E-03	-0.52434951E-03	-0.55099186E-03	-0.57862513E-03
ENF	0.11155505E-01	0.11205583E-01	0.11257588E-01	0.11311598E-01	0.11367704E-01	0.11426000E-01
DSYLN	0.34896992E 04	0.35298750E 04	0.35716006E 04	0.36149512E 04	0.36599902E 04	0.37067998E 04
DSYLHN	0.00000000E-38	0.00000000E-38	0.00000000E-38	0.00000000E-38	0.00000000E-38	0.00000000E-38

178

DESIGN DATA FOR GEODESIC ISOTENSOID CONTOUR

SERVICE CYCLE 1

P NEW	TL NEW	TF NEW
2000.0000	75.0000	75.0000

37

	49	50	51	52	53	54
SNL	0.12175547E 06	0.12180610E 06	0.12185878E 06	0.12191363E 06	0.12197079E 06	0.12203038E 06
SNLH	0.88521939E 05	0.88585739E 05	0.88654760E 05	0.88729632E 05	0.88811100E 05	0.88900032E 05
SNF	0.14243373E 06	0.14321494E 06	0.14402759E 06	0.14487340E 06	0.14575427E 06	0.14667232E 06
ENL	0.76962747E-02	0.77592805E-02	0.78248121E-02	0.78930221E-02	0.79640616E-02	0.80380980E-02
ENLH	-0.60729124E-03	-0.63703395E-03	-0.66789612E-03	-0.69993641E-03	-0.73320884E-03	-0.76777488E-03
ENF	0.11486591E-01	0.11549592E-01	0.11615128E-01	0.11683339E-01	0.11754377E-01	0.11828413E-01
DSYLN	0.37554736E 04	0.38060996E 04	0.38587773E 04	0.39136309E 04	0.39707852E 04	0.40303809E 04
DSYLHN	0.00000000E-38	0.00000000E-38	0.00000000E-38	0.00000000E-38	0.00000000E-38	0.00000000E-38

	55	56	57	58	59	60
SNL	0.12209257E 06	0.12215755E 06	0.12222550E 06	0.12229666E 06	0.12237128E 06	0.12244966E 06
SNLH	0.88997476E 05	0.89104672E 05	0.89223130E 05	0.89354710E 05	0.89501673E 05	0.89666874E 05
SNF	0.14762989E 06	0.14862959E 06	0.14967440E 06	0.15076762E 06	0.15191301E 06	0.15311490E 06
ENL	0.81153195E-02	0.81959404E-02	0.82802009E-02	0.83683636E-02	0.84607340E-02	0.85576605E-02
ENLH	-0.80369785E-03	-0.84105227E-03	-0.87991450E-03	-0.92036650E-03	-0.96249860E-03	-0.10064058E-02
ENF	0.11905636E-01	0.11986257E-01	0.12070516E-01	0.12158679E-01	0.12251049E-01	0.12347976E-01
DSYLN	0.40925742E 04	0.41575469E 04	0.42254990E 04	0.42966572E 04	0.43712783E 04	0.44496621E 04
DSYLHN	0.00000000E-38	0.00000000E-38	0.00000000E-38	0.00000000E-38	0.00000000E-38	0.00000000E-38

	61	62	63	64	65	66
SNL	0.12253215E 06	0.12261915E 06	0.12271112E 06	0.12280864E 06	0.12291237E 06	0.12302313E 06
SNLH	0.89853948E 05	0.90067552E 05	0.90313797E 05	0.90600851E 05	0.90939959E 05	0.91346901E 05
SNF	0.15437822E 06	0.15570868E 06	0.15711291E 06	0.15859869E 06	0.16017523E 06	0.16185342E 06
ENL	0.86595435E-02	0.87668393E-02	0.88800807E-02	0.89999028E-02	0.91270413E-02	0.92623793E-02
ENLH	-0.10521878E-02	-0.10999441E-02	-0.11497736E-02	-0.12017675E-02	-0.12559835E-02	-0.13124291E-02
ENF	0.12449857E-01	0.12557152E-01	0.12670396E-01	0.12790217E-01	0.12917357E-01	0.13052695E-01
DSYLN	0.45321543E 04	0.46191514E 04	0.47111250E 04	0.48086416E 04	0.49123691E 04	0.50231279E 04
DSYLHN	0.00000000E-38	0.00000000E-38	0.00000000E-38	0.00000000E-38	0.00000000E-38	0.00000000E-38

	67	68	69	70	71	72
SNL	0.12314193E 06	0.12327005E 06	0.12340908E 06	0.12356113E 06	0.12364285E 06	0.12372891E 06
SNLH	0.91844734E 05	0.92468421E 05	0.93273807E 05	0.94356010E 05	0.95050712E 05	0.95891405E 05
SNF	0.16364638E 06	0.16556976E 06	0.16764224E 06	0.16988529E 06	0.17107776E 06	0.17232084E 06
ENL	0.94069727E-02	0.95620863E-02	0.97292215E-02	0.99101122E-02	0.10006279E-01	0.10106532E-01
ENLH	-0.13709953E-02	-0.14313497E-02	-0.14927043E-02	-0.15533026E-02	-0.15822258E-02	-0.16091652E-02
ENF	0.13197289E-01	0.13352400E-01	0.13519536E-01	0.13700426E-01	0.13796594E-01	0.13896842E-01
DSYLN	0.51419316E 04	0.52700459E 04	0.54090820E 04	0.55611309E 04	0.56428525E 04	0.57289141E 04
DSYLHN	0.00000000E-38	0.00000000E-38	0.00000000E-38	0.00000000E-38	0.00000000E-38	0.00000000E-38

12

38

DESIGN DATA FOR GEODESIC ISOTENSOID CONTOUR

SERVICE CYCLE 1

P NEW	TL NEW	TF NEW
2000.0000	75.0000	75.0000

	73	74	75	76	77	78
SNL	0.12381977E 06	0.12391595E 06	0.11411550E 06	0.11519230E 06	0.11686699E 06	0.12436113E 06
SNLH	0.96930362E 05	0.98248188E 05	0.96368212E 05	0.98539568E 05	0.10198602E 06	0.11122880E 06
SNF	0.17361572E 06	0.17496108E 06	0.18848854E 06	0.18835011E 06	0.18759404E 06	0.18039032E 06
ENL	0.10210956E-01	0.10319451E-01	0.27796362E-02	0.27940588E-02	0.28158400E-02	0.10757299E-01
ENLH	-0.16327221E-02	-0.16506221E-02	0.20411199E-02	0.21010904E-02	0.21965999E-02	-0.15115328E-02
ENF	0.14001268E-01	0.14109764E-01	0.15200689E-01	0.15189525E-01	0.15128552E-01	0.14547607E-01
DSYLN	0.58197715E 04	0.59159473E 04	0.00000000E-38	0.00000000E-38	0.00000000E-38	0.63611328E 04
DSYLHN	0.00000000E-38	0.00000000E-38	0.00000000E-38	0.00000000E-38	0.00000000E-38	0.00000000E-38

	79	80	81	82	83	84
SNL	0.12696528E 06	0.13600684E 06	0.16411160E 06	-0.12193204E 07	0.12272680E 06	0.12223053E 06
SNLH	0.12335817E 06	0.14270818E 06	0.20304124E 06	-0.27698088E 07	-0.96082867E 05	-0.44265604E 06
SNF	0.17843762E 06	0.16856983E 06	0.13645192E 06	0.17485649E 07	0.17897906E 06	0.21145075E 06
ENL	0.10599808E-01	0.98040244E-02	0.72138691E-02	-0.13421802E-01	0.10643482E-01	0.13262166E-01
ENLH	0.38024923E-02	0.22432177E-01	0.80573729E-01	-0.77942125E-01	-0.71724150E-02	-0.18040468E-01
ENF	0.14390131E-01	0.13594341E-01	0.11004187E-01	0.14101330E 00	0.14433795E-01	0.17052480E-01
DSYLN	0.89652773E 04	0.18006838E 05	0.46111604E 05	0.00000000E-38	0.47268008E 04	0.42305312E 04
DSYLHN	0.53581680E 04	0.24708178E 05	0.85041238E 05	0.00000000E-38	0.00000000E-38	0.00000000E-38

	85	86
SNL	0.27005562E 06	0.26903662E 06
SNLH	0.43335457E 06	0.43129971E 06
SNF	-0.70616714E 04	-0.69303221E 04
ENL	-0.43598085E-02	-0.43492170E-02
ENLH	0.30336433E 00	0.30142292E 00
ENF	-0.56948963E-03	-0.55889694E-03
DSYLN	0.13536798E 06	0.13451831E 06
DSYLHN	0.27149172E 06	0.26977831E 06

174

39

DESIGN DATA FOR GEODESIC ISOTENSOID CONTOUR

SERVICE CYCLE	P NEW	TL NEW	TF NEW
1	2000.0000	75.0000	75.0000

CYLINDER PROPERTIES

SNL	=	0.12592138E 06
SNLH	=	0.12970173E 06
SNF	=	0.11276630E 06
SNFH	=	0.18448421E 06
ENL	=	0.53037358E-02
ENLH	=	0.12427504E-01
ENF	=	0.90940562E-02
ENFH	=	0.16217829E-01
DSYLHN	=	0.79213848E 04
DSYLHN	=	0.11701732E 05

175

DESIGN DATA FOR GEODESIC ISOTENSOID CONTOUR

SERVICE CYCLE 1

P NEW	TL NEW	TF NEW
3000.0000	75.0000	75.0000

40

	1	2	3	4	5	6
SNL	0.13847976E 06	0.13847988E 06	0.13848025E 06	0.13848087E 06	0.13848174E 06	0.13848287E 06
SNLH	0.12967055E 06	0.12967062E 06	0.12967080E 06	0.12967112E 06	0.12967158E 06	0.12967215E 06
SNF	0.30864207E 06	0.30864348E 06	0.30864779E 06	0.30865496E 06	0.30866503E 06	0.30867799E 06
ENL	0.21100175E-01	0.21100286E-01	0.21100634E-01	0.21101216E-01	0.21102022E-01	0.21103074E-01
ENLH	0.44999040E-02	0.44999152E-02	0.44999137E-02	0.44999273E-02	0.44999492E-02	0.44999620E-02
ENF	0.24890489E-01	0.24890603E-01	0.24890950E-01	0.24891529E-01	0.24892341E-01	0.24893386E-01
DSYLN	0.17718606E 05	0.17718364E 05	0.17717632E 05	0.17716420E 05	0.17714716E 05	0.17712527E 05
DSYLHN	0.11670548E 05	0.11670619E 05	0.11670802E 05	0.11671125E 05	0.11671576E 05	0.11672148E 05

	7	8	9	10	11	12
SNL	0.13848423E 06	0.13848586E 06	0.13848774E 06	0.13848987E 06	0.13849227E 06	0.13849493E 06
SNLH	0.12967285E 06	0.12967369E 06	0.12967466E 06	0.12967577E 06	0.12967702E 06	0.12967841E 06
SNF	0.30869387E 06	0.30871265E 06	0.30873435E 06	0.30875901E 06	0.30878658E 06	0.30881716E 06
ENL	0.21104352E-01	0.21105868E-01	0.21107615E-01	0.21109602E-01	0.21111829E-01	0.21114301E-01
ENLH	0.44999834E-02	0.45000134E-02	0.45000603E-02	0.45001067E-02	0.45001772E-02	0.45002475E-02
ENF	0.24894667E-01	0.24896181E-01	0.24897931E-01	0.24899920E-01	0.24902143E-01	0.24904610E-01
DSYLN	0.17709848E 05	0.17706675E 05	0.17703016E 05	0.17698857E 05	0.17694212E 05	0.17689062E 05
DSYLHN	0.11672850E 05	0.11673686E 05	0.11674662E 05	0.11675767E 05	0.11677023E 05	0.11678409E 05

	13	14	15	16	17	18
SNL	0.13849785E 06	0.13850104E 06	0.13850450E 06	0.13850823E 06	0.13851224E 06	0.13851654E 06
SNLH	0.12967993E 06	0.12968162E 06	0.12968344E 06	0.12968543E 06	0.12968757E 06	0.12968987E 06
SNF	0.30885075E 06	0.30888732E 06	0.30892699E 06	0.30896970E 06	0.30901552E 06	0.30906449E 06
ENL	0.21117004E-01	0.21119957E-01	0.21123153E-01	0.21126597E-01	0.21130293E-01	0.21134240E-01
ENLH	0.45003280E-02	0.45004481E-02	0.45005647E-02	0.45007110E-02	0.45008871E-02	0.45010792E-02
ENF	0.24907318E-01	0.24910268E-01	0.24913467E-01	0.24916911E-01	0.24920606E-01	0.24924555E-01
DSYLN	0.17683401E 05	0.17677252E 05	0.17670579E 05	0.17663398E 05	0.17655703E 05	0.17647486E 05
DSYLHN	0.11679929E 05	0.11681624E 05	0.11683442E 05	0.11685426E 05	0.11687573E 05	0.11689874E 05

	19	20	21	22	23	24
SNL	0.13852113E 06	0.13852601E 06	0.13853119E 06	0.13853667E 06	0.13854248E 06	0.13854860E 06
SNLH	0.12969236E 06	0.12969502E 06	0.12969785E 06	0.12970087E 06	0.12970410E 06	0.12970754E 06
SNF	0.30911661E 06	0.30917195E 06	0.30923057E 06	0.30929249E 06	0.30935773E 06	0.30942636E 06
ENL	0.21138444E-01	0.21142911E-01	0.21147640E-01	0.21152626E-01	0.21157891E-01	0.21163424E-01
ENLH	0.45013238E-02	0.45015939E-02	0.45018952E-02	0.45022516E-02	0.45026623E-02	0.45031315E-02
ENF	0.24928759E-01	0.24933222E-01	0.24937949E-01	0.24942942E-01	0.24948204E-01	0.24953739E-01
DSYLN	0.17638748E 05	0.17629478E 05	0.17619669E 05	0.17609317E 05	0.17598422E 05	0.17586971E 05
DSYLHN	0.11692363E 05	0.11695020E 05	0.11697850E 05	0.11700875E 05	0.11704104E 05	0.11707537E 05

SAMPLE CASE NO. INCONEL METAL-SHELL

DESIGN DATA FOR GEODESIC ISOTENSOID CONTOUR

41

SERVICE CYCLE 1

P NEW	TL NEW	TF NEW
3000.0000	75.0000	75.0000

	25	26	27	28	29	30
SNL	0.13855505E 06	0.13856184E 06	0.13856897E 06	0.13857647E 06	0.13858434E 06	0.13859259E 06
SNLH	0.12971118E 06	0.12971506E 06	0.12971916E 06	0.12972351E 06	0.12972814E 06	0.12973304E 06
SNF	0.30949847E 06	0.30957407E 06	0.30965325E 06	0.30973608E 06	0.30982258E 06	0.30991289E 06
ENL	0.21169242E-01	0.21175340E-01	0.21181720E-01	0.21188405E-01	0.21195377E-01	0.21202665E-01
ENLH	0.45036545E-02	0.45042604E-02	0.45049337E-02	0.45056920E-02	0.45065694E-02	0.45075389E-02
ENF	0.24959554E-01	0.24965650E-01	0.24972036E-01	0.24978716E-01	0.24985692E-01	0.24992975E-01
DSYLN	0.17574959E 05	0.17562382E 05	0.17549220E 05	0.17535482E 05	0.17521154E 05	0.17506226E 05
DSYLHN	0.11711181E 05	0.11715060E 05	0.11719160E 05	0.11723512E 05	0.11728145E 05	0.11733039E 05

	31	32	33	34	35	36
SNL	0.13860122E 06	0.13861027E 06	0.13861974E 06	0.13862965E 06	0.13864002E 06	0.13865086E 06
SNLH	0.12973822E 06	0.12974372E 06	0.12974955E 06	0.12975572E 06	0.12976227E 06	0.12976922E 06
SNF	0.31000707E 06	0.31010518E 06	0.31020736E 06	0.31031365E 06	0.31042418E 06	0.31053905E 06
ENL	0.21210252E-01	0.21218167E-01	0.21226408E-01	0.21234981E-01	0.21243895E-01	0.21253155E-01
ENLH	0.45086294E-02	0.45098558E-02	0.45112208E-02	0.45127460E-02	0.45144667E-02	0.45163792E-02
ENF	0.25000570E-01	0.25008482E-01	0.25016722E-01	0.25025294E-01	0.25034208E-01	0.25043472E-01
DSYLN	0.17490676E 05	0.17474515E 05	0.17457723E 05	0.17440288E 05	0.17422207E 05	0.17403452E 05
DSYLHN	0.11738224E 05	0.11743725E 05	0.11749547E 05	0.11755716E 05	0.11762272E 05	0.11769216E 05

	37	38	39	40	41	42
SNL	0.13866221E 06	0.13867408E 06	0.13868650E 06	0.13869949E 06	0.13871311E 06	0.13872735E 06
SNLH	0.12977658E 06	0.12978440E 06	0.12979272E 06	0.12980157E 06	0.12981100E 06	0.12982103E 06
SNF	0.31065840E 06	0.31078235E 06	0.31091102E 06	0.31104455E 06	0.31118311E 06	0.31132689E 06
ENL	0.21262786E-01	0.21272782E-01	0.21283155E-01	0.21293924E-01	0.21305104E-01	0.21316693E-01
ENLH	0.45185035E-02	0.45208762E-02	0.45235269E-02	0.45264811E-02	0.45297694E-02	0.45334292E-02
ENF	0.25053097E-01	0.25063092E-01	0.25073469E-01	0.25084238E-01	0.25095412E-01	0.25107007E-01
DSYLN	0.17384030E 05	0.17363914E 05	0.17343100E 05	0.17321574E 05	0.17299325E 05	0.17276325E 05
DSYLHN	0.11776581E 05	0.11784403E 05	0.11792721E 05	0.11801571E 05	0.11810995E 05	0.11821028E 05

	43	44	45	46	47	48
SNL	0.13874227E 06	0.13875793E 06	0.13877436E 06	0.13879161E 06	0.13880974E 06	0.13882882E 06
SNLH	0.12983173E 06	0.12984318E 06	0.12985543E 06	0.12986856E 06	0.12988266E 06	0.12989783E 06
SNF	0.31147604E 06	0.31163073E 06	0.31179120E 06	0.31195762E 06	0.31213031E 06	0.31230948E 06
ENL	0.21328719E-01	0.21341199E-01	0.21354138E-01	0.21367562E-01	0.21381488E-01	0.21395935E-01
ENLH	0.45375024E-02	0.45420506E-02	0.45471224E-02	0.45527832E-02	0.45591006E-02	0.45661702E-02
ENF	0.25119035E-01	0.25131511E-01	0.25144451E-01	0.25157873E-01	0.25171799E-01	0.25186248E-01
DSYLN	0.17252572E 05	0.17228055E 05	0.17202755E 05	0.17176656E 05	0.17149750E 05	0.17122024E 05
DSYLHN	0.11831733E 05	0.11843183E 05	0.11855433E 05	0.11868564E 05	0.11882659E 05	0.11897829E 05

77

DESIGN DATA FOR GEODESIC ISOTENSOID CONTOUR

SERVICE CYCLE 1

P NEW	TL NEW	TF NEW
3000.0000	75.0000	75.0000

42

	49	50	51	52	53	54
SNL	0.13884893E 06	0.13887016E 06	0.13889260E 06	0.13891637E 06	0.13894160E 06	0.13896845E 06
SNLH	0.12991418E 06	0.12993185E 06	0.12995101E 06	0.12997182E 06	0.12999452E 06	0.13001934E 06
SNF	0.31249542E 06	0.31268840E 06	0.31288878E 06	0.31309690E 06	0.31331316E 06	0.31353798E 06
ENL	0.21410928E-01	0.21426497E-01	0.21442652E-01	0.21459439E-01	0.21476881E-01	0.21495012E-01
ENLH	0.45740756E-02	0.45829467E-02	0.45929166E-02	0.46041329E-02	0.46167959E-02	0.46311221E-02
ENF	0.25201244E-01	0.25216806E-01	0.25232966E-01	0.25249750E-01	0.25267190E-01	0.25285321E-01
DSYLN	0.17093458E 05	0.17064062E 05	0.17033822E 05	0.17002738E 05	0.16970814E 05	0.16938064E 05
DSYLHN	0.11914176E 05	0.11931852E 05	0.11951006E 05	0.11971820E 05	0.11994516E 05	0.12019341E 05

	55	56	57	58	59	60
SNL	0.13899709E 06	0.13902774E 06	0.13906067E 06	0.13909620E 06	0.13913469E 06	0.13917663E 06
SNLH	0.13004661E 06	0.13007668E 06	0.13011000E 06	0.13014714E 06	0.13018876E 06	0.13023572E 06
SNF	0.31377180E 06	0.31401516E 06	0.31426862E 06	0.31453273E 06	0.31480817E 06	0.31509567E 06
ENL	0.21513871E-01	0.21533492E-01	0.21553931E-01	0.21575232E-01	0.21597448E-01	0.21620635E-01
ENLH	0.46473855E-02	0.46659078E-02	0.46870799E-02	0.47114269E-02	0.47395319E-02	0.47721827E-02
ENF	0.25304178E-01	0.25323803E-01	0.25344244E-01	0.25365542E-01	0.25387755E-01	0.25410941E-01
DSYLN	0.16904518E 05	0.16870197E 05	0.16835175E 05	0.16799544E 05	0.16763415E 05	0.16726969E 05
DSYLHN	0.12046609E 05	0.12076680E 05	0.12109999E 05	0.12147142E 05	0.12188759E 05	0.12235719E 05

	61	62	63	64	65	66
SNL	0.13922262E 06	0.13927343E 06	0.13933006E 06	0.13939385E 06	0.13946664E 06	0.13955100E 06
SNLH	0.13028914E 06	0.13035046E 06	0.13042157E 06	0.13050501E 06	0.13060439E 06	0.13072480E 06
SNF	0.31539600E 06	0.31570994E 06	0.31603835E 06	0.31638211E 06	0.31674192E 06	0.31711832E 06
ENL	0.21644848E-01	0.21670171E-01	0.21696649E-01	0.21724376E-01	0.21753391E-01	0.21783744E-01
ENLH	0.48104152E-02	0.48555292E-02	0.49092853E-02	0.49740387E-02	0.50531748E-02	0.51514452E-02
ENF	0.25435161E-01	0.25460479E-01	0.25486963E-01	0.25514686E-01	0.25543703E-01	0.25574058E-01
DSYLN	0.16690463E 05	0.16654280E 05	0.16618936E 05	0.16585210E 05	0.16554271E 05	0.16527876E 05
DSYLHN	0.12289145E 05	0.12350463E 05	0.12421567E 05	0.12505006E 05	0.12604393E 05	0.12724798E 05

	67	68	69	70	71	72
SNL	0.13965076E 06	0.13977169E 06	0.13992329E 06	0.14012207E 06	0.14024810E 06	0.14040002E 06
SNLH	0.13087384E 06	0.13106330E 06	0.13131259E 06	0.13165608E 06	0.13188189E 06	0.13216090E 06
SNF	0.31751128E 06	0.31791957E 06	0.31833929E 06	0.31876053E 06	0.31896499E 06	0.31915845E 06
ENL	0.21815446E-01	0.21848364E-01	0.21882216E-01	0.21916182E-01	0.21932673E-01	0.21948277E-01
ENLH	0.52760244E-02	0.54380753E-02	0.56560375E-02	0.59626924E-02	0.61672042E-02	0.64222881E-02
ENF	0.25605748E-01	0.25638675E-01	0.25672524E-01	0.25706494E-01	0.25722983E-01	0.25738584E-01
DSYLN	0.16508828E 05	0.16501647E 05	0.16514203E 05	0.16560936E 05	0.16605245E 05	0.16671109E 05
DSYLHN	0.12873841E 05	0.13063301E 05	0.13312594E 05	0.13656082E 05	0.13881889E 05	0.14160898E 05

43

DESIGN DATA FOR GEODESIC ISOTENSOID CONTOUR

SERVICE CYCLE 1

P NEW	TL NEW	TF NEW
3000.0000	75.0000	75.0000

	73	74	75	76	77	78
SNL	0.14058804E 06	0.14082866E 06	0.13348754E 06	0.13367355E 06	0.13400830E 06	0.14359924E 06
SNLH	0.13251476E 06	0.13297856E 06	0.13082169E 06	0.13115939E 06	0.13172394E 06	0.13868197E 06
SNF	0.31933130E 06	0.31946703E 06	0.32892870E 06	0.32887878E 06	0.32867014E 06	0.31820309E 06
ENL	0.21962211E-01	0.21973159E-01	0.14105461E-01	0.14127024E-01	0.14192943E-01	0.21871241E-01
ENLH	0.67487296E-02	0.71802619E-02	0.90818815E-02	0.93892813E-02	0.98882457E-02	0.12605032E-01
ENF	0.25752524E-01	0.25763470E-01	0.26526508E-01	0.26522482E-01	0.26505656E-01	0.25661540E-01
DSYLN	0.16768271E 05	0.16912715E 05	0.15487539E 05	0.15673551E 05	0.16008297E 05	0.19238105E 05
DSYLHN	0.14514756E 05	0.14978564E 05	0.12821692E 05	0.13159389E 05	0.13723937E 05	0.20681971E 05

	79	80	81	82	83	84
SNL	0.14661467E 06	0.15046014E 06	0.28156048E 06	-0.11008547E 07	0.13120625E 06	0.13035593E 06
SNLH	0.14509185E 06	0.15332180E 06	0.35762954E 06	-0.25618141E 07	-0.27437587E 06	-0.92087197E 06
SNF	0.31525113E 06	0.31105269E 06	0.16549922E 06	0.17718237E 07	0.33175274E 06	0.39350011E 06
ENL	0.21633166E-01	0.21294593E-01	0.57659504E-01	-0.11546084E-01	0.22963963E-01	0.27943581E-01
ENLH	0.18763527E-01	0.26687167E-01	0.20100571E 00	-0.72340845E-01	-0.18250089E-01	-0.38570678E-01
ENF	0.25423478E-01	0.25084894E-01	0.13346711E-01	0.14288901E 00	0.26754253E-01	0.31733879E-01
DSYLN	0.19649391E 05	0.14453303E 05	0.11744888E 06	0.00000000E-38	0.84794492E 04	0.81253945E 04
DSYLHN	0.21733680E 05	0.10613623E 05	0.15458830E 06	0.00000000E-38	0.00000000E-38	0.00000000E-38

	85	86
SNL	0.40542361E 06	0.40355494E 06
SNLH	0.70484630E 06	0.70107802E 06
SNF	-0.12948183E 05	-0.12707331E 05
ENL	-0.48345305E-02	-0.48150943E-02
ENLH	0.55940421E 00	0.55584396E 00
ENF	-0.10442083E-02	-0.10247848E-02
DSYLN	0.13536799E 06	0.13451832E 06
DSYLHN	0.27149173E 06	0.26977831E 06

179

DESIGN DATA FOR GEODESIC ISOTENSO ID CONTOUR

SERVICE CYCLE	P NEW	TL NEW	TF NEW
1	3000.0000	75.0000	75.0000

44

CYLINDER PROPERTIES

SNL	=	0.14647254E 06
SNLH	=	0.14849607E 06
SNF	=	0.28652174E 06
SNFH	=	0.31718860E 06
ENL	=	0.19316273E-01
ENLH	=	0.23129475E-01
ENF	=	0.23106592E-01
ENFH	=	0.26919796E-01
DSYLHN	=	0.20551150E 05
DSYLHN	=	0.18794342E 05

SAMPLE CASE NO. INCONEL METAL-SHELL

45

DESIGN DATA FOR GEODESIC ISOTENSOID CONTOUR

SERVICE CYCLE 1

P NEW	TL NEW	TF NEW
4000.0000	75.0000	75.0000

	1	2	3	4	5	6
SNL	0.16912841E 06	0.16912836E 06	0.16912822E 06	0.16912801E 06	0.16912769E 06	0.16912730E 06
SNLH	0.17224778E 06	0.17224777E 06	0.17224769E 06	0.17224758E 06	0.17224743E 06	0.17224722E 06
SNF	0.45445157E 06	0.45445102E 06	0.45444947E 06	0.45444687E 06	0.45444329E 06	0.45443864E 06
ENL	0.32859009E-01	0.32858961E-01	0.32858832E-01	0.32858633E-01	0.32858331E-01	0.32857971E-01
ENLH	0.38737229E-01	0.38737239E-01	0.38737231E-01	0.38737227E-01	0.38737240E-01	0.38737219E-01
ENF	0.36649320E-01	0.36649276E-01	0.36649151E-01	0.36648941E-01	0.36648652E-01	0.36648278E-01
DSYLN	0.30648650E 05	0.30648480E 05	0.30647973E 05	0.30647133E 05	0.30645951E 05	0.30644436E 05
DSYLHN	0.42577235E 05	0.42577150E 05	0.42576892E 05	0.42576457E 05	0.42575857E 05	0.42575074E 05

	7	8	9	10	11	12
SNL	0.16912680E 06	0.16912623E 06	0.16912556E 06	0.16912480E 06	0.16912396E 06	0.16912302E 06
SNLH	0.17224697E 06	0.17224667E 06	0.17224633E 06	0.17224594E 06	0.17224551E 06	0.17224502E 06
SNF	0.45443301E 06	0.45442632E 06	0.45441860E 06	0.45440984E 06	0.45439998E 06	0.45438912E 06
ENL	0.32857506E-01	0.32856975E-01	0.32856343E-01	0.32855637E-01	0.32854848E-01	0.32853976E-01
ENLH	0.38737210E-01	0.38737196E-01	0.38737194E-01	0.38737175E-01	0.38737168E-01	0.38737139E-01
ENF	0.36647823E-01	0.36647284E-01	0.36646661E-01	0.36645955E-01	0.36645160E-01	0.36644284E-01
DSYLN	0.30642568E 05	0.30640373E 05	0.30637820E 05	0.30634928E 05	0.30631686E 05	0.30628086E 05
DSYLHN	0.42574117E 05	0.42572984E 05	0.42571668E 05	0.42570169E 05	0.42568486E 05	0.42566608E 05

	13	14	15	16	17	18
SNL	0.16912198E 06	0.16912085E 06	0.16911962E 06	0.16911829E 06	0.16911687E 06	0.16911534E 06
SNLH	0.17224446E 06	0.17224389E 06	0.17224323E 06	0.17224253E 06	0.17224178E 06	0.17224095E 06
SNF	0.45437719E 06	0.45436415E 06	0.45435011E 06	0.45433492E 06	0.45431863E 06	0.45430126E 06
ENL	0.32853017E-01	0.32851963E-01	0.32850822E-01	0.32849597E-01	0.32848291E-01	0.32846884E-01
ENLH	0.38737098E-01	0.38737087E-01	0.38737035E-01	0.38736986E-01	0.38736935E-01	0.38736854E-01
ENF	0.36643322E-01	0.36642270E-01	0.36641138E-01	0.36639913E-01	0.36638599E-01	0.36637198E-01
DSYLN	0.30624131E 05	0.30619811E 05	0.30615121E 05	0.30610061E 05	0.30604631E 05	0.30598803E 05
DSYLHN	0.42564534E 05	0.42562269E 05	0.42559790E 05	0.42557105E 05	0.42554210E 05	0.42551077E 05

	19	20	21	22	23	24
SNL	0.16911372E 06	0.16911200E 06	0.16911016E 06	0.16910821E 06	0.16910616E 06	0.16910399E 06
SNLH	0.17224009E 06	0.17223916E 06	0.17223815E 06	0.17223707E 06	0.17223594E 06	0.17223473E 06
SNF	0.45428273E 06	0.45426307E 06	0.45424230E 06	0.45422034E 06	0.45419718E 06	0.45417280E 06
ENL	0.32845390E-01	0.32843809E-01	0.32842138E-01	0.32840356E-01	0.32838493E-01	0.32836531E-01
ENLH	0.38736793E-01	0.38736702E-01	0.38736586E-01	0.38736465E-01	0.38736327E-01	0.38736173E-01
ENF	0.36635703E-01	0.36634118E-01	0.36632443E-01	0.36630672E-01	0.36628805E-01	0.36626838E-01
DSYLN	0.30592596E 05	0.30585986E 05	0.30578969E 05	0.30571531E 05	0.30563678E 05	0.30555391E 05
DSYLHN	0.42547730E 05	0.42544139E 05	0.42540299E 05	0.42536199E 05	0.42531836E 05	0.42527197E 05

81

DESIGN DATA FOR GEODESIC ISOTENSOID CONTOUR

SERVICE CYCLE 1

P NEW	TL NEW	TF NEW
4000.0000	75.0000	75.0000

46

	25	26	27	28	29	30
SNL	0.16910171E 06	0.16909930E 06	0.16909676E 06	0.16909411E 06	0.16909132E 06	0.16908841E 06
SNLH	0.17223345E 06	0.17223209E 06	0.17223062E 06	0.17222907E 06	0.17222746E 06	0.17222573E 06
SNF	0.45414723E 06	0.45412039E 06	0.45409231E 06	0.45406294E 06	0.45403222E 06	0.45400018E 06
ENL	0.32834467E-01	0.32832303E-01	0.32830034E-01	0.32827670E-01	0.32825189E-01	0.32822611E-01
ENLH	0.38735990E-01	0.38735792E-01	0.38735545E-01	0.38735271E-01	0.38734989E-01	0.38734650E-01
ENF	0.36624776E-01	0.36622612E-01	0.36620348E-01	0.36617979E-01	0.36615501E-01	0.36612918E-01
DSYLN	0.30546652E 05	0.30537457E 05	0.30527787E 05	0.30517637E 05	0.30506986E 05	0.30495822E 05
DSYLHN	0.42522265E 05	0.42517026E 05	0.42511459E 05	0.42505562E 05	0.42499314E 05	0.42492691E 05

	31	32	33	34	35	36
SNL	0.16908534E 06	0.16908214E 06	0.16907879E 06	0.16907528E 06	0.16907161E 06	0.16906776E 06
SNLH	0.17222389E 06	0.17222196E 06	0.17221990E 06	0.17221771E 06	0.17221541E 06	0.17221296E 06
SNF	0.45396680E 06	0.45393199E 06	0.45389577E 06	0.45385806E 06	0.45381886E 06	0.45377811E 06
ENL	0.32819910E-01	0.32817100E-01	0.32814189E-01	0.32811153E-01	0.32807983E-01	0.32804696E-01
ENLH	0.38734272E-01	0.38733853E-01	0.38733366E-01	0.38732821E-01	0.38732240E-01	0.38731575E-01
ENF	0.36610226E-01	0.36607418E-01	0.36604497E-01	0.36601456E-01	0.36598295E-01	0.36595008E-01
DSYLN	0.30484123E 05	0.30471869E 05	0.30459051E 05	0.30445629E 05	0.30431584E 05	0.30416900E 05
DSYLHN	0.42485671E 05	0.42478234E 05	0.42470352E 05	0.42461993E 05	0.42453138E 05	0.42443745E 05

	37	38	39	40	41	42
SNL	0.16906374E 06	0.16905954E 06	0.16905513E 06	0.16905054E 06	0.16904573E 06	0.16904068E 06
SNLH	0.17221035E 06	0.17220758E 06	0.17220465E 06	0.17220153E 06	0.17219821E 06	0.17219467E 06
SNF	0.45373577E 06	0.45369182E 06	0.45364618E 06	0.45359879E 06	0.45354962E 06	0.45349866E 06
ENL	0.32801288E-01	0.32797738E-01	0.32794051E-01	0.32790239E-01	0.32786280E-01	0.32782164E-01
ENLH	0.38730816E-01	0.38729987E-01	0.38729064E-01	0.38728035E-01	0.38726887E-01	0.38725604E-01
ENF	0.36591594E-01	0.36588050E-01	0.36584369E-01	0.36580548E-01	0.36576583E-01	0.36572473E-01
DSYLN	0.30401531E 05	0.30385457E 05	0.30368639E 05	0.30351047E 05	0.30332625E 05	0.30313334E 05
DSYLHN	0.42433767E 05	0.42423181E 05	0.42411928E 05	0.42399960E 05	0.42387218E 05	0.42373638E 05

	43	44	45	46	47	48
SNL	0.16903539E 06	0.16902985E 06	0.16902404E 06	0.16901795E 06	0.16901153E 06	0.16900477E 06
SNLH	0.17219088E 06	0.17218684E 06	0.17218252E 06	0.17217790E 06	0.17217292E 06	0.17216757E 06
SNF	0.45344579E 06	0.45339093E 06	0.45333403E 06	0.45327497E 06	0.45321375E 06	0.45315023E 06
ENL	0.32777898E-01	0.32773471E-01	0.32768882E-01	0.32764134E-01	0.32759198E-01	0.32754072E-01
ENLH	0.38724168E-01	0.38722575E-01	0.38720803E-01	0.38718820E-01	0.38716595E-01	0.38714118E-01
ENF	0.36568209E-01	0.36563785E-01	0.36559196E-01	0.36554433E-01	0.36549496E-01	0.36544373E-01
DSYLN	0.30293119E 05	0.30271918E 05	0.30249682E 05	0.30226338E 05	0.30201785E 05	0.30175945E 05
DSYLHN	0.42359146E 05	0.42343655E 05	0.42327089E 05	0.42309334E 05	0.42290259E 05	0.42269739E 05

DESIGN DATA FOR GEODESIC ISOTENSOID CONTOUR

SERVICE CYCLE 1

P NEW	TL NEW	TF NEW
4000.0000	75.0000	75.0000

47

	49	50	51	52	53	54
SNL	0.16899764E 06	0.16899014E 06	0.16898219E 06	0.16897378E 06	0.16896486E 06	0.16895536E 06
SNLH	0.17216179E 06	0.17215555E 06	0.17214880E 06	0.17214145E 06	0.17213345E 06	0.17212469E 06
SNF	0.45308434E 06	0.45301590E 06	0.45294484E 06	0.45287104E 06	0.45279434E 06	0.45271462E 06
ENL	0.32748747E-01	0.32743238E-01	0.32737499E-01	0.32731548E-01	0.32725365E-01	0.32718932E-01
ENLH	0.38711337E-01	0.38708217E-01	0.38704718E-01	0.38700771E-01	0.38696323E-01	0.38691289E-01
ENF	0.36539059E-01	0.36533540E-01	0.36527810E-01	0.36521858E-01	0.36515672E-01	0.36509243E-01
DSYLN	0.30148713E 05	0.30119979E 05	0.30089594E 05	0.30057414E 05	0.30023262E 05	0.29986914E 05
DSYLHN	0.42247615E 05	0.42223703E 05	0.42197791E 05	0.42169631E 05	0.42138934E 05	0.42105351E 05

	55	56	57	58	59	60
SNL	0.16894523E 06	0.16893439E 06	0.16892274E 06	0.16891018E 06	0.16889657E 06	0.16888174E 06
SNLH	0.17211508E 06	0.17210447E 06	0.17209271E 06	0.17207963E 06	0.17206495E 06	0.17204836E 06
SNF	0.45263166E 06	0.45254533E 06	0.45245547E 06	0.45236179E 06	0.45226406E 06	0.45216208E 06
ENL	0.32712248E-01	0.32705284E-01	0.32698036E-01	0.32690478E-01	0.32682607E-01	0.32674386E-01
ENLH	0.38685574E-01	0.38679066E-01	0.38671604E-01	0.38663060E-01	0.38653163E-01	0.38641644E-01
ENF	0.36502553E-01	0.36495591E-01	0.36488344E-01	0.36480789E-01	0.36472908E-01	0.36464684E-01
DSYLN	0.29948143E 05	0.29906643E 05	0.29862064E 05	0.29813979E 05	0.29761881E 05	0.29705107E 05
DSYLHN	0.42068471E 05	0.42027795E 05	0.41982712E 05	0.41932489E 05	0.41876190E 05	0.41812645E 05

	61	62	63	64	65	66
SNL	0.16886547E 06	0.16884752E 06	0.16882750E 06	0.16880495E 06	0.16877926E 06	0.16874946E 06
SNLH	0.17202952E 06	0.17200791E 06	0.17198285E 06	0.17195341E 06	0.17191840E 06	0.17187597E 06
SNF	0.45205557E 06	0.45194420E 06	0.45182767E 06	0.45170571E 06	0.45157800E 06	0.45144436E 06
ENL	0.32665789E-01	0.32656804E-01	0.32647396E-01	0.32637563E-01	0.32627274E-01	0.32616495E-01
ENLH	0.38628191E-01	0.38612319E-01	0.38593411E-01	0.38570589E-01	0.38542752E-01	0.38508156E-01
ENF	0.36456094E-01	0.36447113E-01	0.36437715E-01	0.36427880E-01	0.36417581E-01	0.36406803E-01
DSYLN	0.29642857E 05	0.29574084E 05	0.29497437E 05	0.29411100E 05	0.29312617E 05	0.29198453E 05
DSYLHN	0.41740379E 05	0.41657445E 05	0.41561282E 05	0.41448404E 05	0.41314012E 05	0.41151169E 05

	67	68	69	70	71	72
SNL	0.16871426E 06	0.16867157E 06	0.16861809E 06	0.16854801E 06	0.16850359E 06	0.16845002E 06
SNLH	0.17182347E 06	0.17175672E 06	0.17166891E 06	0.17154799E 06	0.17146849E 06	0.17137026E 06
SNF	0.45130479E 06	0.45115976E 06	0.45101060E 06	0.45086075E 06	0.45078777E 06	0.45071862E 06
ENL	0.32605256E-01	0.32593546E-01	0.32581519E-01	0.32569432E-01	0.32563562E-01	0.32557973E-01
ENLH	0.38464309E-01	0.38407273E-01	0.38330556E-01	0.38222663E-01	0.38150697E-01	0.38060932E-01
ENF	0.36395547E-01	0.36383851E-01	0.36371822E-01	0.36359738E-01	0.36353852E-01	0.36348276E-01
DSYLN	0.29063502E 05	0.28899873E 05	0.28694805E 05	0.28425941E 05	0.28255488E 05	0.28049996E 05
DSYLHN	0.40949626E 05	0.40693418E 05	0.40356320E 05	0.39891906E 05	0.39586604E 05	0.39209359E 05

18

DESIGN DATA FOR GEODESIC ISOTENSOID CONTOUR

SERVICE CYCLE 1

P NEW	TL NEW	TF NEW
4000.0000	75.0000	75.0000

48

	73	74	75	76	77	78
SNL	0.16838377E 06	0.16829902E 06	0.16052263E 06	0.16008968E 06	0.15946183E 06	0.16732441E 06
SNLH	0.17124574E 06	0.17108252E 06	0.16806717E 06	0.16715683E 06	0.16574056E 06	0.16907771E 06
SNF	0.45065656E 06	0.45060745E 06	0.45997532E 06	0.46000412E 06	0.46022885E 06	0.45104028E 06
ENL	0.32552960E-01	0.32549010E-01	0.24673746E-01	0.24701655E-01	0.24802519E-01	0.32583929E-01
ENLH	0.37946119E-01	0.37794304E-01	0.38890842E-01	0.38019150E-01	0.36634294E-01	0.35887892E-01
ENF	0.36343270E-01	0.36339310E-01	0.37094784E-01	0.37097107E-01	0.37115229E-01	0.36374216E-01
DSYLN	0.27795730E 05	0.27470354E 05	0.27035094E 05	0.26416125E 05	0.25453531E 05	0.23725168E 05
DSYLHN	0.38730986E 05	0.38103955E 05	0.37245479E 05	0.35997437E 05	0.34016619E 05	0.30395740E 05

	79	80	81	82	83	84
SNL	0.16626404E 06	0.16491344E 06	0.39900936E 06	-0.98238897E 06	0.13968570E 06	0.13848132E 06
SNLH	0.16682551E 06	0.16393541E 06	0.51221784E 06	-0.23538194E 07	-0.45266886E 06	-0.13990879E 07
SNF	0.45206465E 06	0.45353554E 06	0.19454653E 06	0.17950826E 07	0.48452641E 06	0.57554945E 06
ENL	0.32666510E-01	0.32785157E-01	0.10810514E 00	-0.96703658E-02	0.35284443E-01	0.42624997E-01
ENLH	0.33724556E-01	0.30942149E-01	0.32143771E 00	-0.66739568E-01	-0.29327766E-01	-0.59100889E-01
ENF	0.36456827E-01	0.36575446E-01	0.15689236E-01	0.14476473E 00	0.39074711E-01	0.46415278E-01
DSYLN	0.19649375E 05	0.14453297E 05	0.11744888E 06	0.00000000E-38	0.84794531E 04	0.81253945E 04
DSYLHN	0.21733664E 05	0.10613613E 05	0.15459831E 06	0.00000000E-38	0.00000000E-38	0.00000000E-38

	85	86
SNL	0.54079159E 06	0.53807324E 06
SNLH	0.97633802E 06	0.97085634E 06
SNF	-0.18834694E 05	-0.18484341E 05
ENL	-0.53092424E-02	-0.52809977E-02
ENLH	0.81544404E 00	0.81026503E 00
ENF	-0.15189269E-02	-0.14906727E-02
DSYLN	0.13536798E 06	0.13451830E 06
DSYLHN	0.27149171E 06	0.26977832E 06

184

DESIGN DATA FOR GEODESIC ISOTENSOID CONTOUR

SERVICE CYCLE	P NEW	TL NEW	TF NEW
1	4000.0000	75.0000	75.0000

49

CYLINDER PROPERTIES

SNL	=	0.16702369E 06
SNLH	=	0.16729042E 06
SNF	=	0.46027718E 06
SNFH	=	0.44989298E 06
ENL	=	0.33328812E-01
ENLH	=	0.33831444E-01
ENF	=	0.37119127E-01
ENFH	=	0.37621762E-01
DSYLHN	=	0.20551152E 05
DSYLHN	=	0.18794344E 05

SAMPLE CASE NO. 1, INCONEL METAL-SHELL

DESIGN DATA FOR GEODESIC ISOTENSOID CONTOUR

SERVICE CYCLE 1

P NEW	TL NEW	TF NEW
4445.0000	75.0000	75.0000

50

	1	2	3	4	5	6
SNL	0.18276706E 06	0.18276695E 06	0.18276658E 06	0.18276599E 06	0.18276515E 06	0.18276408E 06
SNLH	0.19119465E 06	0.19119460E 06	0.19119441E 06	0.19119411E 06	0.19119369E 06	0.19119313E 06
SNF	0.51933677E 06	0.51933535E 06	0.51933121E 06	0.51932425E 06	0.51931460E 06	0.51930211E 06
ENL	0.38091701E-01	0.38091582E-01	0.38091241E-01	0.38090691E-01	0.38089895E-01	0.38088908E-01
ENLH	0.53972834E-01	0.53972845E-01	0.53972835E-01	0.53972826E-01	0.53972827E-01	0.53972799E-01
ENF	0.41881998E-01	0.41881883E-01	0.41881549E-01	0.41880988E-01	0.41880209E-01	0.41879202E-01
DSYLN	0.13638656E 05	0.13638582E 05	0.13638355E 05	0.13637982E 05	0.13637453E 05	0.13636783E 05
DSYLHN	0.18946869E 05	0.18946832E 05	0.18946717E 05	0.18946527E 05	0.18946256E 05	0.18945912E 05

	7	8	9	10	11	12
SNL	0.18276275E 06	0.18276121E 06	0.18275940E 06	0.18275735E 06	0.18275506E 06	0.18275253E 06
SNLH	0.19119245E 06	0.19119165E 06	0.19119072E 06	0.19118966E 06	0.19118849E 06	0.19118716E 06
SNF	0.51928692E 06	0.51926889E 06	0.51924808E 06	0.51922446E 06	0.51919793E 06	0.51916862E 06
ENL	0.38087668E-01	0.38086226E-01	0.38084534E-01	0.38082632E-01	0.38080496E-01	0.38078142E-01
ENLH	0.53972775E-01	0.53972737E-01	0.53972714E-01	0.53972661E-01	0.53972627E-01	0.53972551E-01
ENF	0.41877978E-01	0.41876523E-01	0.41874845E-01	0.41872940E-01	0.41870801E-01	0.41868437E-01
DSYLN	0.13635951E 05	0.13634973E 05	0.13633838E 05	0.13632551E 05	0.13631105E 05	0.13629506E 05
DSYLHN	0.18945484E 05	0.18944979E 05	0.18944395E 05	0.18943725E 05	0.18942979E 05	0.18942141E 05

	13	14	15	16	17	18
SNL	0.18274972E 06	0.18274668E 06	0.18274335E 06	0.18273977E 06	0.18273594E 06	0.18273182E 06
SNLH	0.19118568E 06	0.19118410E 06	0.19118234E 06	0.19118045E 06	0.19117840E 06	0.19117619E 06
SNF	0.51913643E 06	0.51910133E 06	0.51906339E 06	0.51902244E 06	0.51897850E 06	0.51893161E 06
ENL	0.38075547E-01	0.38072713E-01	0.38069641E-01	0.38066339E-01	0.38062803E-01	0.38059019E-01
ENLH	0.53972458E-01	0.53972387E-01	0.53972263E-01	0.53972126E-01	0.53971973E-01	0.53971772E-01
ENF	0.41865841E-01	0.41863010E-01	0.41859950E-01	0.41856648E-01	0.41853105E-01	0.41849323E-01
DSYLN	0.13627746E 05	0.13625824E 05	0.13623732E 05	0.13621484E 05	0.13619062E 05	0.13616479E 05
DSYLHN	0.18941221E 05	0.18940211E 05	0.18939109E 05	0.18937914E 05	0.18936621E 05	0.18935234E 05

	19	20	21	22	23	24
SNL	0.18272743E 06	0.18272277E 06	0.18271780E 06	0.18271255E 06	0.18270700E 06	0.18270114E 06
SNLH	0.19117383E 06	0.19117130E 06	0.19116858E 06	0.19116569E 06	0.19116261E 06	0.19115934E 06
SNF	0.51888164E 06	0.51882860E 06	0.51877250E 06	0.51871322E 06	0.51865073E 06	0.51858494E 06
ENL	0.38054989E-01	0.38050715E-01	0.38046187E-01	0.38041407E-01	0.38036366E-01	0.38031068E-01
ENLH	0.53971571E-01	0.53971322E-01	0.53971023E-01	0.53970689E-01	0.53970309E-01	0.53969874E-01
ENF	0.41845293E-01	0.41841016E-01	0.41836492E-01	0.41831711E-01	0.41826671E-01	0.41821366E-01
DSYLN	0.13613711E 05	0.13610768E 05	0.13607641E 05	0.13604344E 05	0.13600842E 05	0.13597152E 05
DSYLHN	0.18933740E 05	0.18932143E 05	0.18930432E 05	0.18928613E 05	0.18926670E 05	0.18924602E 05

SAMPLE CASE NO. INCONEL METAL-SHELL

DESIGN DATA FOR GEODESIC ISOTENSOID CONTOUR

SERVICE CYCLE 1

P NEW	TL NEW	TF NEW
4445.0000	75.0000	75.0000

51

	25	26	27	28	29	30
SNL	0.18269497E 06	0.18268847E 06	0.18268163E 06	0.18267446E 06	0.18266694E 06	0.18265905E 06
SNLH	0.19115585E 06	0.19115216E 06	0.19114822E 06	0.19114405E 06	0.19113965E 06	0.19113498E 06
SNF	0.51851591E 06	0.51844348E 06	0.51836768E 06	0.51828837E 06	0.51820549E 06	0.51811901E 06
ENL	0.38025498E-01	0.38019657E-01	0.38013540E-01	0.38007152E-01	0.38000463E-01	0.37993492E-01
ENLH	0.53969373E-01	0.53968816E-01	0.53968165E-01	0.53967427E-01	0.53966630E-01	0.53965711E-01
ENF	0.41815799E-01	0.41809957E-01	0.41803845E-01	0.41797449E-01	0.41790765E-01	0.41783791E-01
DSYLN	0.13593262E 05	0.13589172E 05	0.13584873E 05	0.13580355E 05	0.13575617E 05	0.13570646E 05
DSYLHN	0.18922404E 05	0.18920074E 05	0.18917604E 05	0.18914975E 05	0.18912195E 05	0.18909248E 05

	31	32	33	34	35	36
SNL	0.18265078E 06	0.18264212E 06	0.18263307E 06	0.18262358E 06	0.18261366E 06	0.18260329E 06
SNLH	0.19113002E 06	0.19112477E 06	0.19111921E 06	0.19111329E 06	0.19110706E 06	0.19110043E 06
SNF	0.51802886E 06	0.51793490E 06	0.51783709E 06	0.51773532E 06	0.51762948E 06	0.51751947E 06
ENL	0.37986216E-01	0.37978630E-01	0.37970758E-01	0.37962550E-01	0.37954009E-01	0.37945136E-01
ENLH	0.53964676E-01	0.53963527E-01	0.53962217E-01	0.53960753E-01	0.53959144E-01	0.53957336E-01
ENF	0.41776521E-01	0.41768943E-01	0.41761056E-01	0.41752848E-01	0.41744313E-01	0.41735441E-01
DSYLN	0.13565441E 05	0.13559984E 05	0.13554283E 05	0.13548307E 05	0.13542059E 05	0.13535523E 05
DSYLHN	0.18906123E 05	0.18902814E 05	0.18899309E 05	0.18895586E 05	0.18891646E 05	0.18887467E 05

	37	38	39	40	41	42
SNL	0.18259243E 06	0.18258107E 06	0.18256919E 06	0.18255676E 06	0.18254376E 06	0.18253012E 06
SNLH	0.19109338E 06	0.19108590E 06	0.19107796E 06	0.19106951E 06	0.19106053E 06	0.19105094E 06
SNF	0.51740518E 06	0.51728653E 06	0.51716331E 06	0.51703542E 06	0.51690271E 06	0.51676508E 06
ENL	0.37935926E-01	0.37926349E-01	0.37916414E-01	0.37906104E-01	0.37895414E-01	0.37884310E-01
ENLH	0.53955296E-01	0.53953038E-01	0.53950523E-01	0.53947722E-01	0.53944599E-01	0.53941115E-01
ENF	0.41726224E-01	0.41716655E-01	0.41706718E-01	0.41696405E-01	0.41685702E-01	0.41674603E-01
DSYLN	0.13528687E 05	0.13521531E 05	0.13514055E 05	0.13506221E 05	0.13498025E 05	0.13489443E 05
DSYLHN	0.18883029E 05	0.18878314E 05	0.18873309E 05	0.18867982E 05	0.18862312E 05	0.18856270E 05

	43	44	45	46	47	48
SNL	0.18251584E 06	0.18250086E 06	0.18248515E 06	0.18246867E 06	0.18245132E 06	0.18243307E 06
SNLH	0.19104070E 06	0.19102977E 06	0.19101808E 06	0.19100555E 06	0.19099208E 06	0.19097761E 06
SNF	0.51662231E 06	0.51647421E 06	0.51632059E 06	0.51616118E 06	0.51599587E 06	0.51582435E 06
ENL	0.37872791E-01	0.37860841E-01	0.37848447E-01	0.37835615E-01	0.37822277E-01	0.37808444E-01
ENLH	0.53937232E-01	0.53932903E-01	0.53928087E-01	0.53922697E-01	0.53916680E-01	0.53909956E-01
ENF	0.41663089E-01	0.41651146E-01	0.41638757E-01	0.41625901E-01	0.41612570E-01	0.41598738E-01
DSYLN	0.13480447E 05	0.13471010E 05	0.13461111E 05	0.13450725E 05	0.13439795E 05	0.13428301E 05
DSYLHN	0.18849822E 05	0.18842928E 05	0.18835555E 05	0.18827650E 05	0.18819164E 05	0.18810037E 05

DESIGN DATA FOR GEODESIC ISOTENSOID CONTOUR

52

SERVICE CYCLE 1

P NEW	TL NEW	TF NEW
4445.0000	75.0000	75.0000

	49	50	51	52	53	54
SNL	0.18241383E 06	0.18239354E 06	0.18237207E 06	0.18234934E 06	0.18232522E 06	0.18229954E 06
SNLH	0.19096198E 06	0.19094510E 06	0.19092681E 06	0.19090694E 06	0.19088528E 06	0.19086157E 06
SNF	0.51564639E 06	0.51546161E 06	0.51526977E 06	0.51507051E 06	0.51486345E 06	0.51464820E 06
ENL	0.37794085E-01	0.37779197E-01	0.37763716E-01	0.37747647E-01	0.37730951E-01	0.37713584E-01
ENLH	0.53902411E-01	0.53893954E-01	0.53884466E-01	0.53873769E-01	0.53861708E-01	0.53848058E-01
ENF	0.41584386E-01	0.41569485E-01	0.41554014E-01	0.41537944E-01	0.41521245E-01	0.41503887E-01
DSYLN	0.13416182E 05	0.13403396E 05	0.13389877E 05	0.13375559E 05	0.13360359E 05	0.13344186E 05
DSYLHN	0.18800187E 05	0.18789547E 05	0.18778018E 05	0.18765486E 05	0.18751826E 05	0.18736881E 05

	55	56	57	58	59	60
SNL	0.18227216E 06	0.18224285E 06	0.18221137E 06	0.18217741E 06	0.18214061E 06	0.18210052E 06
SNLH	0.19083555E 06	0.19080684E 06	0.19077502E 06	0.19073959E 06	0.19069985E 06	0.19065499E 06
SNF	0.51442428E 06	0.51419123E 06	0.51394860E 06	0.51369570E 06	0.51343191E 06	0.51315662E 06
ENL	0.37695533E-01	0.37676741E-01	0.37657175E-01	0.37636774E-01	0.37615509E-01	0.37593314E-01
ENLH	0.53832565E-01	0.53814915E-01	0.53794709E-01	0.53771530E-01	0.53744720E-01	0.53713552E-01
ENF	0.41485829E-01	0.41467035E-01	0.41447467E-01	0.41427072E-01	0.41405799E-01	0.41383598E-01
DSYLN	0.13326930E 05	0.13308467E 05	0.13288627E 05	0.13267230E 05	0.13244039E 05	0.13218781E 05
DSYLHN	0.18720469E 05	0.18702369E 05	0.18682307E 05	0.18659957E 05	0.18634900E 05	0.18606629E 05

	61	62	63	64	65	66
SNL	0.18205655E 06	0.18200800E 06	0.18195386E 06	0.18189291E 06	0.18182338E 06	0.18174278E 06
SNLH	0.19060399E 06	0.19054547E 06	0.19047762E 06	0.19039796E 06	0.19030314E 06	0.19018824E 06
SNF	0.51286907E 06	0.51256843E 06	0.51225390E 06	0.51192470E 06	0.51158005E 06	0.51121943E 06
ENL	0.37570111E-01	0.37545871E-01	0.37520486E-01	0.37493955E-01	0.37466158E-01	0.37437076E-01
ENLH	0.53677099E-01	0.53634083E-01	0.53582845E-01	0.53521048E-01	0.53445612E-01	0.53351892E-01
ENF	0.41360409E-01	0.41336163E-01	0.41310798E-01	0.41284250E-01	0.41256455E-01	0.41227373E-01
DSYLN	0.13191076E 05	0.13160480E 05	0.13126365E 05	0.13087959E 05	0.13044121E 05	0.12993320E 05
DSYLHN	0.18574471E 05	0.18537564E 05	0.18494771E 05	0.18444545E 05	0.18384736E 05	0.18312273E 05

	67	68	69	70	71	72
SNL	0.18164752E 06	0.18153202E 06	0.18138729E 06	0.18119756E 06	0.18107729E 06	0.18093227E 06
SNLH	0.19004605E 06	0.18986529E 06	0.18962748E 06	0.18929989E 06	0.18908454E 06	0.18881842E 06
SNF	0.51084289E 06	0.51045163E 06	0.51004932E 06	0.50964532E 06	0.50944889E 06	0.50926289E 06
ENL	0.37406722E-01	0.37375167E-01	0.37342719E-01	0.37310143E-01	0.37294317E-01	0.37279284E-01
ENLH	0.53233094E-01	0.53078561E-01	0.52870716E-01	0.52578342E-01	0.52383350E-01	0.52140131E-01
ENF	0.41197007E-01	0.41165454E-01	0.41133009E-01	0.41100429E-01	0.41084588E-01	0.41069588E-01
DSYLN	0.12933258E 05	0.12860457E 05	0.12769199E 05	0.12649555E 05	0.12573703E 05	0.12482246E 05
DSYLHN	0.18222580E 05	0.18108574E 05	0.17958566E 05	0.17751898E 05	0.17616043E 05	0.17448164E 05

188

53

DESIGN DATA FOR GEODESIC ISOTENSO ID CONTOUR

SERVICE CYCLE 1

P NEW	TL NEW	TF NEW
4445.0000	75.0000	75.0000

	73	74	75	76	77	78
SNL	0.18075289E 06	0.18052332E 06	0.17255326E 06	0.17184486E 06	0.17078866E 06	0.17788211E 06
SNLH	0.18848104E 06	0.18803878E 06	0.18464142E 06	0.18317570E 06	0.18087796E 06	0.18260382E 06
SNF	0.50909628E 06	0.50896493E 06	0.51829106E 06	0.51835490E 06	0.51877246E 06	0.51015282E 06
ENL	0.37265863E-01	0.37255263E-01	0.29376643E-01	0.29407374E-01	0.29523791E-01	0.37351076E-01
ENLH	0.51828954E-01	0.51417553E-01	0.52155833E-01	0.50759446E-01	0.48536281E-01	0.46248764E-01
ENF	0.41056151E-01	0.41045559E-01	0.41797666E-01	0.41802814E-01	0.41836488E-01	0.41141356E-01
DSYLN	0.12369117E 05	0.12224309E 05	0.12030629E 05	0.11755187E 05	0.11326832E 05	0.10557703E 05
DSYLHN	0.17235297E 05	0.16956260E 05	0.16574246E 05	0.16018869E 05	0.15137398E 05	0.13526105E 05

	79	80	81	82	83	84
SNL	0.17500804E 06	0.17134519E 06	0.45127411E 06	-0.92967173E 06	0.14345907E 06	0.14209713E 06
SNLH	0.17649701E 06	0.16865852E 06	0.58100963E 06	-0.22612618E 07	-0.53200920E 06	-0.16118939E 07
SNF	0.51294665E 06	0.51694037E 06	0.20747257E 06	0.18054328E 07	0.55251068E 06	0.65656141E 06
ENL	0.37576362E-01	0.37898474E-01	0.13055344E 00	-0.88356716E-02	0.40767070E-01	0.49158240E-01
ENLH	0.40382224E-01	0.32835649E-01	0.37502994E 00	-0.64246998E-01	-0.34257337E-01	-0.68236839E-01
ENF	0.41366665E-01	0.41688739E-01	0.16731659E-01	0.14559942E 00	0.44557313E-01	0.52948500E-01
DSYLN	0.87439922E 04	0.64317500E 04	0.52264746E 05	0.00000000E-38	0.37733672E 04	0.36158125E 04
DSYLHN	0.96715000E 04	0.47231016E 04	0.68791789E 05	0.00000000E-38	0.00000000E-38	0.00000000E-38

	85	86
SNL	0.60103035E 06	0.59793390E 06
SNLH	0.10971518E 07	0.10909077E 07
SNF	-0.21454191E 05	-0.21055110E 05
ENL	-0.55204943E-02	-0.54882934E-02
ENLH	0.92938177E 00	0.92348236E 00
ENF	-0.17301767E-02	-0.16979927E-02
DSYLN	0.60238758E 05	0.59860656E 05
DSYLHN	0.12081381E 06	0.12005134E 06

52

DESIGN DATA FOR GEODESIC ISOTENSO ID CONTOUR

SERVICE CYCLE	P NEW	TL NEW	TF NEW
1	4445.0000	75.0000	75.0000

54

CYLINDER PROPERTIES

SNL	=	0.17616896E 06
SNLH	=	0.17565393E 06
SNF	=	0.53759832E 06
SNFH	=	0.50894642E 06
ENL	=	0.39564383E-01
ENLH	=	0.38593851E-01
ENF	=	0.43354703E-01
ENFH	=	0.42384136E-01
DSYLHN	=	0.91452715E 04
DSYLHN	=	0.83635117E 04

190

55

DESIGN DATA FOR GEODESIC ISOTENSOID CONTOUR

SERVICE CYCLE 1

P NEW	TL NEW	TF NEW
0.0000	75.0000	75.0000

	1	2	3	4	5	6
SNL	-0.14810144E 06	-0.14811012E 06	-0.14813622E 06	-0.14817974E 06	-0.14824078E 06	-0.14831937E 06
SNLH	-0.61706848E 04	-0.61719874E 04	-0.61758990E 04	-0.61824274E 04	-0.61915893E 04	-0.62034041E 04
SNF	0.40988375E 06	0.40987905E 06	0.40986504E 06	0.40984164E 06	0.40980892E 06	0.40976673E 06
ENL	0.29264842E-01	0.29264459E-01	0.29263323E-01	0.29261446E-01	0.29258790E-01	0.29255409E-01
ENLH	0.50701428E-01	0.50701479E-01	0.50701590E-01	0.50701782E-01	0.50702066E-01	0.50702398E-01
ENF	0.33055141E-01	0.33054762E-01	0.33053632E-01	0.33051745E-01	0.33049107E-01	0.33045704E-01
DSYLN	0.00000000E-38	0.00000000E-38	0.00000000E-38	0.00000000E-38	0.00000000E-38	0.00000000E-38
DSYLHN	0.00000000E-38	0.00000000E-38	0.00000000E-38	0.00000000E-38	0.00000000E-38	0.00000000E-38

	7	8	9	10	11	12
SNL	-0.14841566E 06	-0.14852975E 06	-0.14866180E 06	-0.14881199E 06	-0.14898051E 06	-0.14916761E 06
SNLH	-0.62179016E 04	-0.62351135E 04	-0.62550823E 04	-0.62778544E 04	-0.63034839E 04	-0.63320344E 04
SNF	0.40971515E 06	0.40965401E 06	0.40958331E 06	0.40950295E 06	0.40941277E 06	0.40931279E 06
ENL	0.29251233E-01	0.29246314E-01	0.29240599E-01	0.29234123E-01	0.29226853E-01	0.29218799E-01
ENLH	0.50702818E-01	0.50703305E-01	0.50703885E-01	0.50704517E-01	0.50705248E-01	0.50706021E-01
ENF	0.33041544E-01	0.33036614E-01	0.33030912E-01	0.33024431E-01	0.33017159E-01	0.33009096E-01
DSYLN	0.00000000E-38	0.00000000E-38	0.00000000E-38	0.00000000E-38	0.00000000E-38	0.00000000E-38
DSYLHN	0.00000000E-38	0.00000000E-38	0.00000000E-38	0.00000000E-38	0.00000000E-38	0.00000000E-38

	13	14	15	16	17	18
SNL	-0.14937353E 06	-0.14959857E 06	-0.14984305E 06	-0.15010730E 06	-0.15039170E 06	-0.15069668E 06
SNLH	-0.63635754E 04	-0.63981844E 04	-0.64359502E 04	-0.64769670E 04	-0.65213418E 04	-0.65691924E 04
SNF	0.40920284E 06	0.40908278E 06	0.40895254E 06	0.40881186E 06	0.40866062E 06	0.40849866E 06
ENL	0.29209933E-01	0.29200249E-01	0.29189732E-01	0.29178387E-01	0.29166196E-01	0.29153137E-01
ENLH	0.50706858E-01	0.50707798E-01	0.50708770E-01	0.50709810E-01	0.50710915E-01	0.50712057E-01
ENF	0.33000229E-01	0.32990546E-01	0.32980043E-01	0.32968699E-01	0.32956501E-01	0.32943441E-01
DSYLN	0.00000000E-38	0.00000000E-38	0.00000000E-38	0.00000000E-38	0.00000000E-38	0.00000000E-38
DSYLHN	0.00000000E-38	0.00000000E-38	0.00000000E-38	0.00000000E-38	0.00000000E-38	0.00000000E-38

	19	20	21	22	23	24
SNL	-0.15102267E 06	-0.15137018E 06	-0.15173973E 06	-0.15213190E 06	-0.15254730E 06	-0.15298658E 06
SNLH	-0.66206458E 04	-0.66758431E 04	-0.67349392E 04	-0.67981017E 04	-0.68655148E 04	-0.69373793E 04
SNF	0.40832575E 06	0.40814168E 06	0.40794629E 06	0.40773924E 06	0.40752027E 06	0.40728907E 06
ENL	0.29139190E-01	0.29124351E-01	0.29108589E-01	0.29091890E-01	0.29074231E-01	0.29055592E-01
ENLH	0.50713281E-01	0.50714539E-01	0.50715832E-01	0.50717174E-01	0.50718551E-01	0.50719959E-01
ENF	0.32929496E-01	0.32914652E-01	0.32898894E-01	0.32882196E-01	0.32864538E-01	0.32845893E-01
DSYLN	0.00000000E-38	0.00000000E-38	0.00000000E-38	0.00000000E-38	0.00000000E-38	0.00000000E-38
DSYLHN	0.00000000E-38	0.00000000E-38	0.00000000E-38	0.00000000E-38	0.00000000E-38	0.00000000E-38

19

DESIGN DATA FOR GEODESIC ISOTENSOID CONTOUR

SERVICE CYCLE 1

P NEW	TL NEW	TF NEW
0.0000	75.0000	75.0000

56

	25	26	27	28	29	30
SNL	-0.15345050E 06	-0.15393979E 06	-0.15445535E 06	-0.15499803E 06	-0.15556882E 06	-0.15616878E 06
SNLH	-0.70139161E 04	-0.70953648E 04	-0.71819899E 04	-0.72740778E 04	-0.73719444E 04	-0.74759363E 04
SNF	0.40704542E 06	0.40678888E 06	0.40651919E 06	0.40623587E 06	0.40593852E 06	0.40562674E 06
ENL	0.29035941E-01	0.29015253E-01	0.28993499E-01	0.28970659E-01	0.28946675E-01	0.28921534E-01
ENLH	0.50721384E-01	0.50722836E-01	0.50724276E-01	0.50725712E-01	0.50727169E-01	0.50728584E-01
ENF	0.32826243E-01	0.32805555E-01	0.32783805E-01	0.32760957E-01	0.32736978E-01	0.32711834E-01
DSYLN	0.00000000E-38	0.00000000E-38	0.00000000E-38	0.00000000E-38	0.00000000E-38	0.00000000E-38
DSYLHN	0.00000000E-38	0.00000000E-38	0.00000000E-38	0.00000000E-38	0.00000000E-38	0.00000000E-38

	31	32	33	34	35	36
SNL	-0.15679905E 06	-0.15746084E 06	-0.15815548E 06	-0.15888441E 06	-0.15964918E 06	-0.16045146E 06
SNLH	-0.75864329E 04	-0.77038513E 04	-0.78286519E 04	-0.79613414E 04	-0.81024804E 04	-0.82526882E 04
SNF	0.40530004E 06	0.40495784E 06	0.40459961E 06	0.40422477E 06	0.40383265E 06	0.40342253E 06
ENL	0.28895179E-01	0.28867574E-01	0.28838702E-01	0.28808474E-01	0.28776842E-01	0.28743767E-01
ENLH	0.50729963E-01	0.50731306E-01	0.50732564E-01	0.50733739E-01	0.50734842E-01	0.50735809E-01
ENF	0.32685487E-01	0.32657890E-01	0.32629001E-01	0.32598772E-01	0.32567149E-01	0.32534075E-01
DSYLN	0.00000000E-38	0.00000000E-38	0.00000000E-38	0.00000000E-38	0.00000000E-38	0.00000000E-38
DSYLHN	0.00000000E-38	0.00000000E-38	0.00000000E-38	0.00000000E-38	0.00000000E-38	0.00000000E-38

	37	38	39	40	41	42
SNL	-0.16129310E 06	-0.16217608E 06	-0.16310256E 06	-0.16407489E 06	-0.16509567E 06	-0.16616773E 06
SNLH	-0.84126530E 04	-0.85831401E 04	-0.87650011E 04	-0.89591876E 04	-0.91667677E 04	-0.93889409E 04
SNF	0.40299367E 06	0.40254527E 06	0.40207639E 06	0.40158609E 06	0.40107330E 06	0.40053696E 06
ENL	0.28709191E-01	0.28673020E-01	0.28635209E-01	0.28595673E-01	0.28554329E-01	0.28511074E-01
ENLH	0.50736609E-01	0.50737247E-01	0.50737678E-01	0.50737865E-01	0.50737764E-01	0.50737322E-01
ENF	0.32499489E-01	0.32463328E-01	0.32425515E-01	0.32385975E-01	0.32344621E-01	0.32301368E-01
DSYLN	0.00000000E-38	0.00000000E-38	0.00000000E-38	0.00000000E-38	0.00000000E-38	0.00000000E-38
DSYLHN	0.00000000E-38	0.00000000E-38	0.00000000E-38	0.00000000E-38	0.00000000E-38	0.00000000E-38

	43	44	45	46	47	48
SNL	-0.16729415E 06	-0.16847834E 06	-0.16972406E 06	-0.17103543E 06	-0.17241711E 06	-0.17387417E 06
SNLH	-0.96270590E 04	-0.98826512E 04	-0.10157453E 05	-0.10453443E 05	-0.10772890E 05	-0.11118393E 05
SNF	0.39997578E 06	0.39938837E 06	0.39877327E 06	0.39812877E 06	0.39745324E 06	0.39674457E 06
ENL	0.28465811E-01	0.28418433E-01	0.28368824E-01	0.28316873E-01	0.28262388E-01	0.28205237E-01
ENLH	0.50736493E-01	0.50735210E-01	0.50733411E-01	0.50730994E-01	0.50727866E-01	0.50723925E-01
ENF	0.32256111E-01	0.32208740E-01	0.32159134E-01	0.32107159E-01	0.32052680E-01	0.31995530E-01
DSYLN	0.00000000E-38	0.00000000E-38	0.00000000E-38	0.00000000E-38	0.00000000E-38	0.00000000E-38
DSYLHN	0.00000000E-38	0.00000000E-38	0.00000000E-38	0.00000000E-38	0.00000000E-38	0.00000000E-38

19/22

DESIGN DATA FOR GEODESIC ISOTENSOID CONTOUR

SERVICE CYCLE 1

P NEW	TL NEW	TF NEW
0.0000	75.0000	75.0000

57

	49	50	51	52	53	54
SNL	-0.17541236E 06	-0.17703801E 06	-0.17875834E 06	-0.18058142E 06	-0.18251644E 06	-0.18457386E 06
SNLH	-0.11492964E 05	-0.11900090E 05	-0.12343854E 05	-0.12829040E 05	-0.13361312E 05	-0.13947407E 05
SNF	0.39600069E 06	0.39521904E 06	0.39439700E 06	0.39353157E 06	0.39261938E 06	0.39165667E 06
ENL	0.28145236E-01	0.28082213E-01	0.28015910E-01	0.27946119E-01	0.27872558E-01	0.27794912E-01
ENLH	0.50719011E-01	0.50712983E-01	0.50705662E-01	0.50696799E-01	0.50686141E-01	0.50673356E-01
ENF	0.31935539E-01	0.31872503E-01	0.31806210E-01	0.31736417E-01	0.31662853E-01	0.31585215E-01
DSYLN	0.00000000E-38	0.00000000E-38	0.00000000E-38	0.00000000E-38	0.00000000E-38	0.00000000E-38
DSYLHN	0.00000000E-38	0.00000000E-38	0.00000000E-38	0.00000000E-38	0.00000000E-38	0.00000000E-38

	55	56	57	58	59	60
SNL	-0.18676561E 06	-0.18910548E 06	-0.19160942E 06	-0.19429601E 06	-0.19718709E 06	-0.20030857E 06
SNLH	-0.14595416E 05	-0.15315118E 05	-0.16118465E 05	-0.17020193E 05	-0.18038692E 05	-0.19197199E 05
SNF	0.39063916E 06	0.38956205E 06	0.38841993E 06	0.38720646E 06	0.38591450E 06	0.38453584E 06
ENL	0.27712861E-01	0.27625999E-01	0.27533893E-01	0.27436026E-01	0.27331843E-01	0.27220669E-01
ENLH	0.50658046E-01	0.50639720E-01	0.50617758E-01	0.50591447E-01	0.50559766E-01	0.50521499E-01
ENF	0.31503158E-01	0.31416294E-01	0.31324187E-01	0.31226327E-01	0.31122137E-01	0.31010954E-01
DSYLN	0.00000000E-38	0.00000000E-38	0.00000000E-38	0.00000000E-38	0.00000000E-38	0.00000000E-38
DSYLHN	0.00000000E-38	0.00000000E-38	0.00000000E-38	0.00000000E-38	0.00000000E-38	0.00000000E-38

	61	62	63	64	65	66
SNL	-0.20369137E 06	-0.20737285E 06	-0.21139865E 06	-0.21582525E 06	-0.22072355E 06	-0.22618407E 06
SNLH	-0.20525491E 05	-0.22062342E 05	-0.23859170E 05	-0.25985600E 05	-0.28538219E 05	-0.31654899E 05
SNF	0.38306092E 06	0.38147860E 06	0.37977596E 06	0.37793792E 06	0.37594687E 06	0.37378249E 06
ENL	0.27101710E-01	0.26974110E-01	0.26836780E-01	0.26688567E-01	0.26527999E-01	0.26353449E-01
ENLH	0.50475080E-01	0.50418358E-01	0.50348501E-01	0.50261520E-01	0.50151971E-01	0.50011749E-01
ENF	0.30892010E-01	0.30764403E-01	0.30627094E-01	0.30478864E-01	0.30318296E-01	0.30143749E-01
DSYLN	0.00000000E-38	0.00000000E-38	0.00000000E-38	0.00000000E-38	0.00000000E-38	0.00000000E-38
DSYLHN	0.00000000E-38	0.00000000E-38	0.00000000E-38	0.00000000E-38	0.00000000E-38	0.00000000E-38

	67	68	69	70	71	72
SNL	-0.23232464E 06	-0.23930210E 06	-0.24733061E 06	-0.25671179E 06	-0.26203967E 06	-0.26788581E 06
SNLH	-0.35539243E 05	-0.40504567E 05	-0.47058242E 05	-0.56077009E 05	-0.61975580E 05	-0.69211299E 05
SNF	0.37142191E 06	0.36884088E 06	0.36601770E 06	0.36294530E 06	0.36132508E 06	0.35966711E 06
ENL	0.26163094E-01	0.25954942E-01	0.25727263E-01	0.25479495E-01	0.25348846E-01	0.25215105E-01
ENLH	0.49828789E-01	0.49584109E-01	0.49246278E-01	0.48759527E-01	0.48429920E-01	0.48015209E-01
ENF	0.29953379E-01	0.29745232E-01	0.29517556E-01	0.29269783E-01	0.29139119E-01	0.29005412E-01
DSYLN	0.00000000E-38	0.00000000E-38	0.00000000E-38	0.00000000E-38	0.00000000E-38	0.00000000E-38
DSYLHN	0.00000000E-38	0.00000000E-38	0.00000000E-38	0.00000000E-38	0.00000000E-38	0.00000000E-38

58

DESIGN DATA FOR GEODESIC ISOTENSOID CONTOUR

SERVICE CYCLE 1

P NEW	TL NEW	TF NEW
0.0000	75.0000	75.0000

	73	74	75	76	77	78
SNL	-0.27434145E 06	-0.28152154E 06	-0.29723505E 06	-0.30661570E 06	-0.31740783E 06	-0.32117712E 06
SNLH	-0.78281077E 05	-0.89957116E 05	-0.10829629E 06	-0.13051655E 06	-0.16338527E 06	-0.21062471E 06
SNF	0.35800295E 06	0.35639450E 06	0.36435650E 06	0.36335896E 06	0.36342839E 06	0.35614363E 06
ENL	0.25080914E-01	0.24951195E-01	0.16962565E-01	0.16907702E-01	0.16996043E-01	0.24930978E-01
ENLH	0.47481058E-01	0.46772296E-01	0.47101019E-01	0.45116260E-01	0.41998012E-01	0.38232589E-01
ENF	0.28871205E-01	0.28741492E-01	0.29383589E-01	0.29303142E-01	0.29308741E-01	0.28721260E-01
DSYLN	0.00000000E-38	0.00000000E-38	0.00000000E-38	0.00000000E-38	0.00000000E-38	0.00000000E-38
DSYLHN	0.00000000E-38	0.00000000E-38	0.00000000E-38	0.00000000E-38	0.00000000E-38	0.00000000E-38

	79	80	81	82	83	84
SNL	-0.33578481E 06	-0.34530729E 06	0.45882055E 06	-0.14562517E 07	-0.33060904E 06	-0.32296057E 06
SNLH	-0.30600198E 06	-0.39167283E 06	0.68794652E 06	-0.31857979E 07	-0.81428003E 06	-0.15656702E 07
SNF	0.36459939E 06	0.37527781E 06	-0.50789514E 06	0.17020470E 07	0.39562685E 06	0.46517637E 06
ENL	0.25612872E-01	0.26474072E-01	0.72862492E-01	-0.17173236E-01	0.28115146E-01	0.33723962E-01
ENLH	0.29596122E-01	0.19593643E-01	0.50463252E 00	-0.89144675E-01	-0.38928016E-01	-0.62395211E-01
ENF	0.29403177E-01	0.30264340E-01	-0.40959285E-01	0.13726185E 00	0.31905391E-01	0.37514223E-01
DSYLN	0.00000000E-38	0.00000000E-38	0.75464453E 04	0.00000000E-38	0.00000000E-38	0.00000000E-38
DSYLHN	0.00000000E-38	0.00000000E-38	0.10693688E 06	0.00000000E-38	0.00000000E-38	0.00000000E-38

	85	86
SNL	-0.11841021E 05	-0.12150787E-02
SNLH	-0.19080316E 07	-0.18240431E 07
SNF	0.81998535E 05	0.77905619E 05
ENL	0.28224710E-02	0.24924084E-02
ENLH	0.83817367E 00	0.83504526E 00
ENF	0.66127850E-02	0.62827112E-02
DSYLN	0.00000000E-38	0.00000000E-38
DSYLHN	0.00000000E-38	0.00000000E-38

194

59

DESIGN DATA FOR GEODESIC ISOTENSOID CONTOUR

SERVICE CYCLE	P NEW	TL NEW	TF NEW
1	0.0000	75.0000	75.0000

CYLINDER PROPERTIES

SNL	=	-0.16742321E 06
SNLH	=	-0.36915301E 06
SNF	=	0.46335906E 06
SNFH	=	0.33088032E 06
ENL	=	0.33577343E-01
ENLH	=	0.24233681E-01
ENF	=	0.37367666E-01
ENFH	=	0.28023967E-01
DSYLHN	=	0.00000000E-38
DSYLHN	=	0.00000000E-38

195

DESIGN DATA FOR GEODESIC ISOTENSOID CONTOUR

60

SERVICE CYCLE 2

P NEW	TL NEW	TF NEW
0.0000	75.0000	75.0000

	1	2	3	4	5	6
SNL	-0.14860463E 05	-0.14861378E 05	-0.14864124E 05	-0.14868706E 05	-0.14875128E 05	-0.14883399E 05
SNLH	-0.61916505E 03	-0.61929758E 03	-0.61969538E 03	-0.62035938E 03	-0.62129114E 03	-0.62249281E 03
SNF	0.41127638E 05	0.41127287E 05	0.41126234E 05	0.41124479E 05	0.41122019E 05	0.41118849E 05
ENL	-0.47357758E-03	-0.47360586E-03	-0.47369073E-03	-0.47383230E-03	-0.47403074E-03	-0.47428633E-03
ENLH	0.11904417E-03	0.11904845E-03	0.11906131E-03	0.11908275E-03	0.11911277E-03	0.11915138E-03
ENF	0.33167450E-02	0.33167167E-02	0.33166318E-02	0.33164903E-02	0.33162918E-02	0.33160362E-02
DSYLN	0.00000000E-38	0.00000000E-38	0.00000000E-38	0.00000000E-38	0.00000000E-38	0.00000000E-38
DSYLHN	0.00000000E-38	0.00000000E-38	0.00000000E-38	0.00000000E-38	0.00000000E-38	0.00000000E-38

	7	8	9	10	11	12
SNL	-0.14893531E 05	-0.14905536E 05	-0.14919432E 05	-0.14935236E 05	-0.14952970E 05	-0.14972659E 05
SNLH	-0.62396722E 03	-0.62571783E 03	-0.62774884E 03	-0.63006505E 03	-0.63267210E 03	-0.63557628E 03
SNF	0.41114967E 05	0.41110369E 05	0.41105046E 05	0.41098993E 05	0.41092202E 05	0.41084663E 05
ENL	-0.47459936E-03	-0.47497026E-03	-0.47539951E-03	-0.47588765E-03	-0.47643534E-03	-0.47704328E-03
ENLH	0.11919860E-03	0.11925444E-03	0.11931892E-03	0.11939204E-03	0.11947385E-03	0.11956435E-03
ENF	0.33157232E-02	0.33153523E-02	0.33149230E-02	0.33144349E-02	0.33138872E-02	0.33132793E-02
DSYLN	0.00000000E-38	0.00000000E-38	0.00000000E-38	0.00000000E-38	0.00000000E-38	0.00000000E-38
DSYLHN	0.00000000E-38	0.00000000E-38	0.00000000E-38	0.00000000E-38	0.00000000E-38	0.00000000E-38

	13	14	15	16	17	18
SNL	-0.14994329E 05	-0.15018011E 05	-0.15043738E 05	-0.15071547E 05	-0.15101477E 05	-0.15133573E 05
SNLH	-0.63878481E 03	-0.64230566E 03	-0.64614773E 03	-0.65032086E 03	-0.65483597E 03	-0.65970500E 03
SNF	0.41076367E 05	0.41067303E 05	0.41057458E 05	0.41046818E 05	0.41035370E 05	0.41023096E 05
ENL	-0.47771231E-03	-0.47844331E-03	-0.47923726E-03	-0.48009527E-03	-0.48101854E-03	-0.48200834E-03
ENLH	0.11966357E-03	0.11977153E-03	0.11988827E-03	0.12001379E-03	0.12014814E-03	0.12029133E-03
ENF	0.33126102E-02	0.33118793E-02	0.33110853E-02	0.33102272E-02	0.33093040E-02	0.33083142E-02
DSYLN	0.00000000E-38	0.00000000E-38	0.00000000E-38	0.00000000E-38	0.00000000E-38	0.00000000E-38
DSYLHN	0.00000000E-38	0.00000000E-38	0.00000000E-38	0.00000000E-38	0.00000000E-38	0.00000000E-38

	19	20	21	22	23	24
SNL	-0.15167882E 05	-0.15204456E 05	-0.15243349E 05	-0.15284624E 05	-0.15328345E 05	-0.15374583E 05
SNLH	-0.66494104E 03	-0.67055851E 03	-0.67657315E 03	-0.68300224E 03	-0.68986461E 03	-0.69718087E 03
SNF	0.41009980E 05	0.40996002E 05	0.40981143E 05	0.40965378E 05	0.40948687E 05	0.40931040E 05
ENL	-0.48306609E-03	-0.48419334E-03	-0.48539171E-03	-0.48666301E-03	-0.48800918E-03	-0.48943228E-03
ENLH	0.12044338E-03	0.12060431E-03	0.12077413E-03	0.12095286E-03	0.12114050E-03	0.12133704E-03
ENF	0.33072564E-02	0.33061292E-02	0.33049308E-02	0.33036595E-02	0.33023134E-02	0.33008903E-02
DSYLN	0.00000000E-38	0.00000000E-38	0.00000000E-38	0.00000000E-38	0.00000000E-38	0.00000000E-38
DSYLHN	0.00000000E-38	0.00000000E-38	0.00000000E-38	0.00000000E-38	0.00000000E-38	0.00000000E-38

196

DESIGN DATA FOR GEODESIC ISOTENSOID CONTOUR

SERVICE CYCLE 2

P NEW	TL NEW	TF NEW
0.0000	75.0000	75.0000

61

	25	26	27	28	29	30
SNL	-0.15423414E 05	-0.15474919E 05	-0.15529187E 05	-0.15586314E 05	-0.15646402E 05	-0.15709563E 05
SNLH	-0.70497347E 03	-0.71326711E 03	-0.72208871E 03	-0.73146775E 03	-0.74143655E 03	-0.75203054E 03
SNF	0.40912412E 05	0.40892771E 05	0.40872087E 05	0.40850324E 05	0.40827445E 05	0.40803410E 05
ENL	-0.49093455E-03	-0.49251842E-03	-0.49418648E-03	-0.49594155E-03	-0.49778663E-03	-0.49972496E-03
ENLH	0.12154247E-03	0.12175675E-03	0.12197985E-03	0.12221171E-03	0.12245226E-03	0.12270137E-03
ENF	0.32993880E-02	0.32978041E-02	0.32961361E-02	0.32943810E-02	0.32925359E-02	0.32905976E-02
DSYLN	0.00000000E-38	0.00000000E-38	0.00000000E-38	0.00000000E-38	0.00000000E-38	0.00000000E-38
DSYLHN	0.00000000E-38	0.00000000E-38	0.00000000E-38	0.00000000E-38	0.00000000E-38	0.00000000E-38

	31	32	33	34	35	36
SNL	-0.15775916E 05	-0.15845590E 05	-0.15918725E 05	-0.15995473E 05	-0.16075998E 05	-0.16160477E 05
SNLH	-0.76328858E 03	-0.77525352E 03	-0.78797243E 03	-0.80149731E 03	-0.81588559E 03	-0.83120078E 03
SNF	0.40778175E 05	0.40751693E 05	0.40723914E 05	0.40694784E 05	0.40664244E 05	0.40632229E 05
ENL	-0.50176006E-03	-0.50389568E-03	-0.50613590E-03	-0.50848513E-03	-0.51094811E-03	-0.51352994E-03
ENLH	0.12295893E-03	0.12322475E-03	0.12349864E-03	0.12378032E-03	0.12406948E-03	0.12436572E-03
ENF	0.32885625E-02	0.32864269E-02	0.32841866E-02	0.32818374E-02	0.32793745E-02	0.32767926E-02
DSYLN	0.00000000E-38	0.00000000E-38	0.00000000E-38	0.00000000E-38	0.00000000E-38	0.00000000E-38
DSYLHN	0.00000000E-38	0.00000000E-38	0.00000000E-38	0.00000000E-38	0.00000000E-38	0.00000000E-38

	37	38	39	40	41	42
SNL	-0.16249102E 05	-0.16342084E 05	-0.16439651E 05	-0.16542051E 05	-0.16649557E 05	-0.16762466E 05
SNLH	-0.84751338E 03	-0.86490187E 03	-0.88345368E 03	-0.90326640E 03	-0.92444957E 03	-0.94712614E 03
SNF	0.40598670E 05	0.40563495E 05	0.40526620E 05	0.40487958E 05	0.40447414E 05	0.40404880E 05
ENL	-0.51623624E-03	-0.51907299E-03	-0.52204674E-03	-0.52516464E-03	-0.52843440E-03	-0.53186448E-03
ENLH	0.12466859E-03	0.12497750E-03	0.12529177E-03	0.12561059E-03	0.12593296E-03	0.12625770E-03
ENF	0.32740863E-02	0.32712496E-02	0.32682758E-02	0.32651579E-02	0.32618882E-02	0.32584581E-02
DSYLN	0.00000000E-38	0.00000000E-38	0.00000000E-38	0.00000000E-38	0.00000000E-38	0.00000000E-38
DSYLHN	0.00000000E-38	0.00000000E-38	0.00000000E-38	0.00000000E-38	0.00000000E-38	0.00000000E-38

	43	44	45	46	47	48
SNL	-0.16881104E 05	-0.17005832E 05	-0.17137044E 05	-0.17275179E 05	-0.17420720E 05	-0.17574208E 05
SNLH	-0.97143497E 03	-0.99753300E 03	-0.10255984E 04	-0.10558345E 04	-0.10884738E 04	-0.11237836E 04
SNF	0.40360245E 05	0.40313381E 05	0.40264152E 05	0.40212405E 05	0.40157975E 05	0.40100675E 05
ENL	-0.53546413E-03	-0.53924345E-03	-0.54321357E-03	-0.54738666E-03	-0.55177622E-03	-0.55639711E-03
ENLH	0.12658339E-03	0.12690833E-03	0.12723047E-03	0.12754733E-03	0.12785597E-03	0.12815279E-03
ENF	0.32548584E-02	0.32510791E-02	0.32471090E-02	0.32429359E-02	0.32385463E-02	0.32339254E-02
DSYLN	0.00000000E-38	0.00000000E-38	0.00000000E-38	0.00000000E-38	0.00000000E-38	0.00000000E-38
DSYLHN	0.00000000E-38	0.00000000E-38	0.00000000E-38	0.00000000E-38	0.00000000E-38	0.00000000E-38

18

DESIGN DATA FOR GEODESIC ISOTENSOID CONTOUR

SERVICE CYCLE 2

P NEW	TL NEW	TF NEW
0.0000	75.0000	75.0000

62

	49	50	51	52	53	54
SNL	-0.17736242E 05	-0.17907496E 05	-0.18088724E 05	-0.18280780E 05	-0.18484627E 05	-0.18701366E 05
SNLH	-0.11620731E 04	-0.12037009E 04	-0.12490862E 04	-0.12987208E 04	-0.13531869E 04	-0.14131772E 04
SNF	0.40040304E 05	0.39976631E 05	0.39909404E 05	0.39838339E 05	0.39763118E 05	0.39683381E 05
ENL	-0.56126584E-03	-0.56640072E-03	-0.57182223E-03	-0.57755323E-03	-0.58361945E-03	-0.59004981E-03
ENLH	0.12843345E-03	0.12869267E-03	0.12892399E-03	0.12911952E-03	0.12926951E-03	0.12936190E-03
ENF	0.32290567E-02	0.32239218E-02	0.32185003E-02	0.32127693E-02	0.32067031E-02	0.32002727E-02
DSYLN	0.00000000E-38	0.00000000E-38	0.00000000E-38	0.00000000E-38	0.00000000E-38	0.00000000E-38
DSYLHN	0.00000000E-38	0.00000000E-38	0.00000000E-38	0.00000000E-38	0.00000000E-38	0.00000000E-38

	55	56	57	58	59	60
SNL	-0.18932254E 05	-0.19178736E 05	-0.19442488E 05	-0.19725461E 05	-0.20029947E 05	-0.20358658E 05
SNLH	-0.14795235E 04	-0.15532316E 04	-0.16355306E 04	-0.17279364E 04	-0.18323412E 04	-0.19511357E 04
SNF	0.39598723E 05	0.39508680E 05	0.39412726E 05	0.39310256E 05	0.39200572E 05	0.39082869E 05
ENL	-0.59687715E-03	-0.60413867E-03	-0.61187690E-03	-0.62014063E-03	-0.62898605E-03	-0.63847833E-03
ENLH	0.12938161E-03	0.12930974E-03	0.12912229E-03	0.12878862E-03	0.12826914E-03	0.12751209E-03
ENF	0.31934454E-02	0.31861839E-02	0.31784456E-02	0.31701819E-02	0.31613365E-02	0.31518442E-02
DSYLN	0.00000000E-38	0.00000000E-38	0.00000000E-38	0.00000000E-38	0.00000000E-38	0.00000000E-38
DSYLHN	0.00000000E-38	0.00000000E-38	0.00000000E-38	0.00000000E-38	0.00000000E-38	0.00000000E-38

	61	62	63	64	65	66
SNL	-0.20714832E 05	-0.21102378E 05	-0.21526063E 05	-0.21991773E 05	-0.22506888E 05	-0.23080802E 05
SNLH	-0.20873839E 04	-0.22450764E 04	-0.24295046E 04	-0.26478340E 04	-0.29100044E 04	-0.32302029E 04
SNF	0.38956204E 05	0.38819478E 05	0.38671397E 05	0.38510439E 05	0.38334805E 05	0.38142383E 05
ENL	-0.64869324E-03	-0.65971954E-03	-0.67166149E-03	-0.68464197E-03	-0.69880602E-03	-0.71432396E-03
ENLH	0.12644895E-03	0.12498752E-03	0.12300173E-03	0.12031549E-03	0.11667720E-03	0.11171708E-03
ENF	0.31416293E-02	0.31306030E-02	0.31186611E-02	0.31056805E-02	0.30915165E-02	0.30759986E-02
DSYLN	0.00000000E-38	0.00000000E-38	0.00000000E-38	0.00000000E-38	0.00000000E-38	0.00000000E-38
DSYLHN	0.00000000E-38	0.00000000E-38	0.00000000E-38	0.00000000E-38	0.00000000E-38	0.00000000E-38

	67	68	69	70	71	72
SNL	-0.23725695E 05	-0.24457706E 05	-0.25298719E 05	-0.26279230E 05	-0.26834768E 05	-0.27442954E 05
SNLH	-0.36293750E 04	-0.41397413E 04	-0.48134489E 04	-0.57405258E 04	-0.63467501E 04	-0.70901945E 04
SNF	0.37930729E 05	0.37697127E 05	0.37438872E 05	0.37154208E 05	0.37002316E 05	0.36845281E 05
ENL	-0.73139279E-03	-0.75023163E-03	-0.77105868E-03	-0.79401540E-03	-0.80626485E-03	-0.81892896E-03
ENLH	0.10487344E-03	0.95257849E-04	0.81392893E-04	0.60659705E-04	0.46301053E-04	0.28008458E-04
ENF	0.30589298E-02	0.30400909E-02	0.30192638E-02	0.29963071E-02	0.29840577E-02	0.29713936E-02
DSYLN	0.00000000E-38	0.00000000E-38	0.00000000E-38	0.00000000E-38	0.00000000E-38	0.00000000E-38
DSYLHN	0.00000000E-38	0.00000000E-38	0.00000000E-38	0.00000000E-38	0.00000000E-38	0.00000000E-38

63

DESIGN DATA FOR GEODESIC ISOTENSO ID CONTOUR

SERVICE CYCLE 2

P NEW	TL NEW	TF NEW
0.0000	75.0000	75.0000

	73	74	75	76	77	78
SNL	-0.28112499E 05	-0.28853975E 05	-0.29680049E 05	-0.30605222E 05	-0.31643910E 05	-0.32802943E 05
SNLH	-0.80216702E 04	-0.92199707E 04	-0.10813797E 05	-0.13027669E 05	-0.16288662E 05	-0.21511838E 05
SNF	0.36685514E 05	0.36527926E 05	0.36382380E 05	0.36269120E 05	0.36231920E 05	0.36374195E 05
ENL	-0.83181336E-03	-0.84452204E-03	-0.85625961E-03	-0.86539346E-03	-0.86839347E-03	-0.85691968E-03
ENLH	0.42243317E-05	-0.27494129E-04	-0.71180077E-04	-0.13394048E-03	-0.22941703E-03	-0.38706402E-03
ENF	0.29585092E-02	0.29458005E-02	0.29340629E-02	0.29249290E-02	0.29219291E-02	0.29334028E-02
DSYLN	0.00000000E-38	0.00000000E-38	0.00000000E-38	0.00000000E-38	0.00000000E-38	0.00000000E-38
DSYLHN	0.00000000E-38	0.00000000E-38	0.00000000E-38	0.00000000E-38	0.00000000E-38	0.00000000E-38

	79	80	81	82	83	84
SNL	-0.34055468E 05	-0.34680765E 05	-0.35258020E 05	-0.35740995E 05	-0.35851692E 05	-0.36776280E 05
SNLH	-0.31034878E 05	-0.39337465E 05	-0.52865182E 05	-0.78189496E 05	-0.88301630E 05	-0.17828655E 06
SNF	0.36977858E 05	0.37690839E 05	0.39029152E 05	0.41773583E 05	0.42902312E 05	0.52970728E 05
ENL	-0.80823722E-03	-0.75073871E-03	-0.64281023E-03	-0.42148521E-03	-0.33045871E-03	0.48151032E-03
ENLH	-0.68254168E-03	-0.94451752E-03	-0.13754954E-02	-0.21878906E-02	-0.25130528E-02	-0.54071429E-02
ENF	0.29820853E-02	0.30395838E-02	0.31475123E-02	0.33688373E-02	0.34598639E-02	0.42718328E-02
DSYLN	0.00000000E-38	0.00000000E-38	0.00000000E-38	0.00000000E-38	0.00000000E-38	0.00000000E-38
DSYLHN	0.00000000E-38	0.00000000E-38	0.00000000E-38	0.00000000E-38	0.00000000E-38	0.00000000E-38

	85	86
SNL	0.76329041E 03	0.81903312E-04
SNLH	0.12299465E 06	0.12295103E 06
SNF	-0.52857516E 04	-0.52512881E 04
ENL	-0.42165918E-02	-0.42138118E-02
ENLH	0.10073995E-01	0.10026332E-01
ENF	-0.42627029E-03	-0.42349097E-03
DSYLN	0.00000000E-38	0.00000000E-38
DSYLHN	0.49946475E 04	0.49510254E 04

199

64

DESIGN DATA FOR GEODESIC ISOTENSO ID CONTOUR

SERVICE CYCLE	P NEW	TL NEW	TF NEW
2	0.0000	75.0000	75.0000

CYLINDER PROPERTIES

SNL	=	-0.15752468E 05
SNLH	=	-0.24977442E 05
SNF	=	0.43596397E 05
SNFH	=	0.22219436E 05
ENL	=	-0.27448417E-03
ENLH	=	-0.65836214E-03
ENF	=	0.35158384E-02
ENFH	=	0.31319604E-02
DSYLHN	=	0.00000000E-38
DSYLHN	=	0.00000000E-38

78

SAMPLE CASE NO. INCONEL METAL-SHELL

DESIGN DATA FOR GEODESIC ISOTENSOID CONTOUR

65

SERVICE CYCLE 2

P NEW	TL NEW	TF NEW
0.0000	-320.0000	-320.0000

	1	2	3	4	5	6
SNL	-0.10963704E 05	-0.10964375E 05	-0.10966389E 05	-0.10969749E 05	-0.10974458E 05	-0.10980524E 05
SNLH	-0.45680557E 03	-0.45690318E 03	-0.45719616E 03	-0.45768520E 03	-0.45837143E 03	-0.45925644E 03
SNF	0.30343015E 05	0.30342744E 05	0.30341934E 05	0.30340583E 05	0.30338688E 05	0.30336249E 05
ENL	-0.23117195E-02	-0.23117397E-02	-0.23118004E-02	-0.23119016E-02	-0.23120435E-02	-0.23122262E-02
ENLH	-0.18854152E-02	-0.18854121E-02	-0.18854030E-02	-0.18853877E-02	-0.18853663E-02	-0.18853389E-02
ENF	0.14786030E-02	0.14785828E-02	0.14785221E-02	0.14784209E-02	0.14782790E-02	0.14780963E-02
DSYLN	0.00000000E-38	0.00000000E-38	0.00000000E-38	0.00000000E-38	0.00000000E-38	0.00000000E-38
DSYLHN	0.00000000E-38	0.00000000E-38	0.00000000E-38	0.00000000E-38	0.00000000E-38	0.00000000E-38

	7	8	9	10	11	12
SNL	-0.10987953E 05	-0.10996758E 05	-0.11006948E 05	-0.11018536E 05	-0.11031541E 05	-0.11045979E 05
SNLH	-0.46034234E 03	-0.46163164E 03	-0.46312746E 03	-0.46483328E 03	-0.46675331E 03	-0.46889215E 03
SNF	0.30333261E 05	0.30329721E 05	0.30325624E 05	0.30320964E 05	0.30315737E 05	0.30309935E 05
ENL	-0.23124500E-02	-0.23127151E-02	-0.23130220E-02	-0.23133709E-02	-0.23137624E-02	-0.23141970E-02
ENLH	-0.18853052E-02	-0.18852655E-02	-0.18852196E-02	-0.18851675E-02	-0.18851093E-02	-0.18850449E-02
ENF	0.14778725E-02	0.14776074E-02	0.14773006E-02	0.14769516E-02	0.14765601E-02	0.14761255E-02
DSYLN	0.00000000E-38	0.00000000E-38	0.00000000E-38	0.00000000E-38	0.00000000E-38	0.00000000E-38
DSYLHN	0.00000000E-38	0.00000000E-38	0.00000000E-38	0.00000000E-38	0.00000000E-38	0.00000000E-38

	13	14	15	16	17	18
SNL	-0.11061869E 05	-0.11079234E 05	-0.11098099E 05	-0.11118489E 05	-0.11140434E 05	-0.11163967E 05
SNLH	-0.47125509E 03	-0.47384802E 03	-0.47667747E 03	-0.47975071E 03	-0.48307573E 03	-0.48666133E 03
SNF	0.30303549E 05	0.30296573E 05	0.30288996E 05	0.30280806E 05	0.30271995E 05	0.30262548E 05
ENL	-0.23146753E-02	-0.23151978E-02	-0.23157653E-02	-0.23163786E-02	-0.23170385E-02	-0.23177460E-02
ENLH	-0.18849743E-02	-0.18848974E-02	-0.18848144E-02	-0.18847250E-02	-0.18846295E-02	-0.18845276E-02
ENF	0.14756472E-02	0.14751248E-02	0.14745573E-02	0.14739439E-02	0.14732840E-02	0.14725765E-02
DSYLN	0.00000000E-38	0.00000000E-38	0.00000000E-38	0.00000000E-38	0.00000000E-38	0.00000000E-38
DSYLHN	0.00000000E-38	0.00000000E-38	0.00000000E-38	0.00000000E-38	0.00000000E-38	0.00000000E-38

	19	20	21	22	23	24
SNL	-0.11189122E 05	-0.11215937E 05	-0.11244451E 05	-0.11274710E 05	-0.11306762E 05	-0.11340658E 05
SNLH	-0.49051716E 03	-0.49465380E 03	-0.49908282E 03	-0.50381694E 03	-0.50887001E 03	-0.51425719E 03
SNF	0.30252455E 05	0.30241698E 05	0.30230263E 05	0.30218132E 05	0.30205287E 05	0.30191709E 05
ENL	-0.23185020E-02	-0.23193076E-02	-0.23201641E-02	-0.23210727E-02	-0.23220347E-02	-0.23230517E-02
ENLH	-0.18844194E-02	-0.18843049E-02	-0.18841842E-02	-0.18840571E-02	-0.18839236E-02	-0.18837839E-02
ENF	0.14718205E-02	0.14710149E-02	0.14701584E-02	0.14692499E-02	0.14682879E-02	0.14672709E-02
DSYLN	0.00000000E-38	0.00000000E-38	0.00000000E-38	0.00000000E-38	0.00000000E-38	0.00000000E-38
DSYLHN	0.00000000E-38	0.00000000E-38	0.00000000E-38	0.00000000E-38	0.00000000E-38	0.00000000E-38

90

DESIGN DATA FOR GEODESIC ISOTENSOID CONTOUR

66

SERVICE CYCLE 2	P NEW	TL NEW	TF NEW
	0.0000	-320.0000	-320.0000

	25	26	27	28	29	30
SNL	-0.11376453E 05	-0.11414207E 05	-0.11453985E 05	-0.11495857E 05	-0.11539898E 05	-0.11586188E 05
SNLH	-0.51999499E 03	-0.52610155E 03	-0.53259669E 03	-0.53950208E 03	-0.54684148E 03	-0.55464096E 03
SNF	0.30177375E 05	0.30162263E 05	0.30146349E 05	0.30129606E 05	0.30112005E 05	0.30093516E 05
ENL	-0.23241251E-02	-0.23252569E-02	-0.23264488E-02	-0.23277028E-02	-0.23290210E-02	-0.23304058E-02
ENLH	-0.18836379E-02	-0.18834856E-02	-0.18833270E-02	-0.18831623E-02	-0.18829914E-02	-0.18828145E-02
ENF	0.14661974E-02	0.14650656E-02	0.14638737E-02	0.14626197E-02	0.14613015E-02	0.14599167E-02
DSYLN	0.00000000E-38	0.00000000E-38	0.00000000E-38	0.00000000E-38	0.00000000E-38	0.00000000E-38
DSYLHN	0.00000000E-38	0.00000000E-38	0.00000000E-38	0.00000000E-38	0.00000000E-38	0.00000000E-38

	31	32	33	34	35	36
SNL	-0.11634815E 05	-0.11685874E 05	-0.11739466E 05	-0.11795703E 05	-0.11854703E 05	-0.11916597E 05
SNLH	-0.56292908E 03	-0.57173730E 03	-0.58110029E 03	-0.59105622E 03	-0.60164735E 03	-0.61292033E 03
SNF	0.30074104E 05	0.30053734E 05	0.30032368E 05	0.30009964E 05	0.29986477E 05	0.29961857E 05
ENL	-0.23318597E-02	-0.23333853E-02	-0.23349855E-02	-0.23366635E-02	-0.23384226E-02	-0.23402665E-02
ENLH	-0.18826317E-02	-0.18824430E-02	-0.18822487E-02	-0.18820488E-02	-0.18818438E-02	-0.18816338E-02
ENF	0.14584629E-02	0.14569372E-02	0.14553370E-02	0.14536590E-02	0.14519000E-02	0.14500561E-02
DSYLN	0.00000000E-38	0.00000000E-38	0.00000000E-38	0.00000000E-38	0.00000000E-38	0.00000000E-38
DSYLHN	0.00000000E-38	0.00000000E-38	0.00000000E-38	0.00000000E-38	0.00000000E-38	0.00000000E-38

	37	38	39	40	41	42
SNL	-0.11981525E 05	-0.12049640E 05	-0.12121108E 05	-0.12196112E 05	-0.12274849E 05	-0.12357537E 05
SNLH	-0.62492700E 03	-0.63772502E 03	-0.65137865E 03	-0.66595961E 03	-0.68154840E 03	-0.69823535E 03
SNF	0.29936053E 05	0.29909006E 05	0.29880656E 05	0.29850934E 05	0.29819766E 05	0.29787073E 05
ENL	-0.23421991E-02	-0.23442247E-02	-0.23463480E-02	-0.23485741E-02	-0.23509084E-02	-0.23533569E-02
ENLH	-0.18814192E-02	-0.18812005E-02	-0.18809780E-02	-0.18807525E-02	-0.18805247E-02	-0.18802953E-02
ENF	0.14481235E-02	0.14460978E-02	0.14439745E-02	0.14417484E-02	0.14394141E-02	0.14369656E-02
DSYLN	0.00000000E-38	0.00000000E-38	0.00000000E-38	0.00000000E-38	0.00000000E-38	0.00000000E-38
DSYLHN	0.00000000E-38	0.00000000E-38	0.00000000E-38	0.00000000E-38	0.00000000E-38	0.00000000E-38

	43	44	45	46	47	48
SNL	-0.12444414E 05	-0.12535741E 05	-0.12631808E 05	-0.12732933E 05	-0.12839471E 05	-0.12951813E 05
SNLH	-0.71612249E 03	-0.73532513E 03	-0.75597414E 03	-0.77821888E 03	-0.80223015E 03	-0.82820432E 03
SNF	0.29752768E 05	0.29716753E 05	0.29678924E 05	0.29639165E 05	0.29597349E 05	0.29553334E 05
ENL	-0.23559263E-02	-0.23586236E-02	-0.23614568E-02	-0.23644346E-02	-0.23675664E-02	-0.23708629E-02
ENLH	-0.18800655E-02	-0.18798364E-02	-0.18796096E-02	-0.18793869E-02	-0.18791704E-02	-0.18789626E-02
ENF	0.14343963E-02	0.14316989E-02	0.14288657E-02	0.14258879E-02	0.14227561E-02	0.14194595E-02
DSYLN	0.00000000E-38	0.00000000E-38	0.00000000E-38	0.00000000E-38	0.00000000E-38	0.00000000E-38
DSYLHN	0.00000000E-38	0.00000000E-38	0.00000000E-38	0.00000000E-38	0.00000000E-38	0.00000000E-38

DESIGN DATA FOR GEODESIC ISOTENSOID CONTOUR

SERVICE CYCLE 2

P NEW	TL NEW	TF NEW
0.0000	-320.0000	-320.0000

	49	50	51	52	53	54
SNL	-0.13070397E 05	-0.13195714E 05	-0.13328315E 05	-0.13468818E 05	-0.13617929E 05	-0.13776447E 05
SNLH	-0.85636838E 03	-0.88698576E 03	-0.92036418E 03	-0.95686480E 03	-0.99691507E 03	-0.10410235E 04
SNF	0.29506964E 05	0.29458066E 05	0.29406445E 05	0.29351884E 05	0.29294143E 05	0.29232944E 05
ENL	-0.23743358E-02	-0.23779981E-02	-0.23818643E-02	-0.23859505E-02	-0.23902751E-02	-0.23948586E-02
ENLH	-0.18787668E-02	-0.18785868E-02	-0.18784271E-02	-0.18782936E-02	-0.18781932E-02	-0.18781346E-02
ENF	0.14159867E-02	0.14123244E-02	0.14084583E-02	0.14043719E-02	0.14000473E-02	0.13954638E-02
DSYLN	0.00000000E-38	0.00000000E-38	0.00000000E-38	0.00000000E-38	0.00000000E-38	0.00000000E-38
DSYLHN	0.00000000E-38	0.00000000E-38	0.00000000E-38	0.00000000E-38	0.00000000E-38	0.00000000E-38

	55	56	57	58	59	60
SNL	-0.13945288E 05	-0.14125505E 05	-0.14318317E 05	-0.14525144E 05	-0.14747654E 05	-0.14987820E 05
SNLH	-0.10898006E 04	-0.11439847E 04	-0.12044778E 04	-0.12723923E 04	-0.13491166E 04	-0.14364046E 04
SNF	0.29167980E 05	0.29098897E 05	0.29025292E 05	0.28946706E 05	0.28862606E 05	0.28772378E 05
ENL	-0.23997242E-02	-0.24048982E-02	-0.24104108E-02	-0.24162966E-02	-0.24225953E-02	-0.24293530E-02
ENLH	-0.18781288E-02	-0.18781892E-02	-0.18783332E-02	-0.18785827E-02	-0.18789663E-02	-0.18795212E-02
ENF	0.13905984E-02	0.13854243E-02	0.13799116E-02	0.13740259E-02	0.13677272E-02	0.13609695E-02
DSYLN	0.00000000E-38	0.00000000E-38	0.00000000E-38	0.00000000E-38	0.00000000E-38	0.00000000E-38
DSYLHN	0.00000000E-38	0.00000000E-38	0.00000000E-38	0.00000000E-38	0.00000000E-38	0.00000000E-38

	61	62	63	64	65	66
SNL	-0.15247999E 05	-0.15531033E 05	-0.15840391E 05	-0.16180354E 05	-0.16556289E 05	-0.16975030E 05
SNLH	-0.15365042E 04	-0.16523425E 04	-0.17878004E 04	-0.19481326E 04	-0.21406279E 04	-0.23756883E 04
SNF	0.28675306E 05	0.28570552E 05	0.28457134E 05	0.28333892E 05	0.28199460E 05	0.28052236E 05
ENL	-0.24366232E-02	-0.24444688E-02	-0.24529633E-02	-0.24621936E-02	-0.24722619E-02	-0.24832883E-02
ENLH	-0.18802964E-02	-0.18813582E-02	-0.18827969E-02	-0.18847389E-02	-0.18873644E-02	-0.18909382E-02
ENF	0.13536993E-02	0.13458537E-02	0.13373592E-02	0.13281289E-02	0.13180606E-02	0.13070342E-02
DSYLN	0.00000000E-38	0.00000000E-38	0.00000000E-38	0.00000000E-38	0.00000000E-38	0.00000000E-38
DSYLHN	0.00000000E-38	0.00000000E-38	0.00000000E-38	0.00000000E-38	0.00000000E-38	0.00000000E-38

	67	68	69	70	71	72
SNL	-0.17445442E 05	-0.17979272E 05	-0.18592470E 05	-0.19307290E 05	-0.19712297E 05	-0.20155735E 05
SNLH	-0.26686700E 04	-0.30431937E 04	-0.35374875E 04	-0.42175510E 04	-0.46621987E 04	-0.52074598E 04
SNF	0.27890366E 05	0.27711795E 05	0.27514479E 05	0.27297111E 05	0.27181179E 05	0.27061362E 05
ENL	-0.24954116E-02	-0.25087858E-02	-0.25235638E-02	-0.25398437E-02	-0.25485265E-02	-0.25575003E-02
ENLH	-0.18958625E-02	-0.19027730E-02	-0.19127267E-02	-0.19275963E-02	-0.19378875E-02	-0.19509926E-02
ENF	0.12949109E-02	0.12815367E-02	0.12667586E-02	0.12504788E-02	0.12417960E-02	0.12328222E-02
DSYLN	0.00000000E-38	0.00000000E-38	0.00000000E-38	0.00000000E-38	0.00000000E-38	0.00000000E-38
DSYLHN	0.00000000E-38	0.00000000E-38	0.00000000E-38	0.00000000E-38	0.00000000E-38	0.00000000E-38

68

DESIGN DATA FOR GEODESIC ISOTENSOID CONTOUR

SERVICE CYCLE 2

P NEW	TL NEW	TF NEW
0.0000	-320.0000	-320.0000

	73	74	75	76	77	78
SNL	-0.20644025E 05	-0.21185013E 05	-0.21788200E 05	-0.22464701E 05	-0.23226208E 05	-0.24080518E 05
SNLH	-0.58906028E 04	-0.67694381E 04	-0.79384357E 04	-0.95625085E 04	-0.11955660E 05	-0.15791760E 05
SNF	0.26939500E 05	0.26819341E 05	0.26708399E 05	0.26622089E 05	0.26593746E 05	0.26702161E 05
ENL	-0.25666271E-02	-0.25756265E-02	-0.25839356E-02	-0.25903997E-02	-0.25925225E-02	-0.25844027E-02
ENLH	-0.19680253E-02	-0.19907325E-02	-0.20219986E-02	-0.20669092E-02	-0.21352340E-02	-0.22480967E-02
ENF	0.12236954E-02	0.12146960E-02	0.12063869E-02	0.11999227E-02	0.11978000E-02	0.12059197E-02
DSYLN	0.00000000E-38	0.00000000E-38	0.00000000E-38	0.00000000E-38	0.00000000E-38	0.00000000E-38
DSYLHN	0.00000000E-38	0.00000000E-38	0.00000000E-38	0.00000000E-38	0.00000000E-38	0.00000000E-38

	79	80	81	82	83	84
SNL	-0.25015841E 05	-0.25494247E 05	-0.25955100E 05	-0.26386852E 05	-0.26500148E 05	-0.27475894E 05
SNLH	-0.22797031E 05	-0.28917443E 05	-0.38916566E 05	-0.57725718E 05	-0.65269061E 05	-0.13319950E 06
SNF	0.27162516E 05	0.27706989E 05	0.28731208E 05	0.30840589E 05	0.31711686E 05	0.39574912E 05
ENL	-0.25499243E-02	-0.25091457E-02	-0.24324364E-02	-0.22744534E-02	-0.22092123E-02	-0.16202926E-02
ENLH	-0.24598989E-02	-0.26480376E-02	-0.29583317E-02	-0.35459890E-02	-0.37822127E-02	-0.59098966E-02
ENF	0.12403982E-02	0.12811767E-02	0.13578861E-02	0.15158691E-02	0.15811103E-02	0.21700299E-02
DSYLN	0.00000000E-38	0.00000000E-38	0.00000000E-38	0.00000000E-38	0.00000000E-38	0.00000000E-38
DSYLHN	0.00000000E-38	0.00000000E-38	0.00000000E-38	0.00000000E-38	0.00000000E-38	0.00000000E-38

	85	86
SNL	-0.51909547E 03	-0.50660849E-04
SNLH	-0.83645704E 05	-0.76050688E 05
SNF	0.35947126E 04	0.32481557E 04
ENL	-0.43150422E-02	-0.43409985E-02
ENLH	0.15163812E-02	0.16971345E-02
ENF	-0.52472246E-03	-0.55067799E-03
DSYLN	0.00000000E-38	0.00000000E-38
DSYLHN	0.00000000E-38	0.00000000E-38

202

69

DESIGN DATA FOR GEODESIC ISOTENSOID CONTOUR

SERVICE CYCLE 2

P NEW	TL NEW	TF NEW
0.0000	-320.0000	-320.0000

CYLINDER PROPERTIES

SNL	=	-0.11485878E 05
SNLH	=	-0.14124145E 05
SNF	=	0.31788221E 05
SNFH	=	0.12466415E 05
ENL	=	-0.22034803E-02
ENLH	=	-0.23105246E-02
ENF	=	0.15868424E-02
ENFH	=	0.14797979E-02
DSYLHN	=	0.00000000E-38
DSYLHN	=	0.00000000E-38

20

DESIGN DATA FOR GEODESIC ISOTENSOID CONTOUR

SERVICE CYCLE 2

P NEW	TL NEW	TF NEW
1000.0000	-320.0000	-320.0000

70

	1	2	3	4	5	6
SNL	0.63086455E 05	0.63087676E 05	0.63091345E 05	0.63097468E 05	0.63106053E 05	0.63117111E 05
SNLH	0.43928765E 05	0.43928945E 05	0.43929477E 05	0.43930369E 05	0.43931622E 05	0.43933234E 05
SNF	0.56035016E 05	0.56035505E 05	0.56036980E 05	0.56039445E 05	0.56042896E 05	0.56047343E 05
ENL	-0.38750617E-03	-0.38746942E-03	-0.38735886E-03	-0.38717443E-03	-0.38691584E-03	-0.38658273E-03
ENLH	-0.11648056E-02	-0.11648111E-02	-0.11648278E-02	-0.11648556E-02	-0.11648945E-02	-0.11649447E-02
ENF	0.34028164E-02	0.34028531E-02	0.34029635E-02	0.34031481E-02	0.34034066E-02	0.34037397E-02
DSYLN	0.00000000E-38	0.00000000E-38	0.00000000E-38	0.00000000E-38	0.00000000E-38	0.00000000E-38
DSYLHN	0.00000000E-38	0.00000000E-38	0.00000000E-38	0.00000000E-38	0.00000000E-38	0.00000000E-38

	7	8	9	10	11	12
SNL	0.63130654E 05	0.63146705E 05	0.63165281E 05	0.63186411E 05	0.63210118E 05	0.63236440E 05
SNLH	0.43935213E 05	0.43937563E 05	0.43940292E 05	0.43943401E 05	0.43946906E 05	0.43950805E 05
SNF	0.56052790E 05	0.56059245E 05	0.56066715E 05	0.56075208E 05	0.56084737E 05	0.56095318E 05
ENL	-0.38617481E-03	-0.38569141E-03	-0.38513202E-03	-0.38449583E-03	-0.38378211E-03	-0.38298981E-03
ENLH	-0.11650060E-02	-0.11650785E-02	-0.11651621E-02	-0.11652570E-02	-0.11653630E-02	-0.11654804E-02
ENF	0.34041476E-02	0.34046311E-02	0.34051905E-02	0.34058267E-02	0.34065403E-02	0.34073327E-02
DSYLN	0.00000000E-38	0.00000000E-38	0.00000000E-38	0.00000000E-38	0.00000000E-38	0.00000000E-38
DSYLHN	0.00000000E-38	0.00000000E-38	0.00000000E-38	0.00000000E-38	0.00000000E-38	0.00000000E-38

	13	14	15	16	17	18
SNL	0.63265410E 05	0.63297068E 05	0.63331462E 05	0.63368635E 05	0.63408647E 05	0.63451551E 05
SNLH	0.43955110E 05	0.43959843E 05	0.43965000E 05	0.43970603E 05	0.43976668E 05	0.43983202E 05
SNF	0.56106958E 05	0.56119677E 05	0.56133493E 05	0.56148422E 05	0.56164486E 05	0.56181707E 05
ENL	-0.38211790E-03	-0.38116534E-03	-0.38013060E-03	-0.37901253E-03	-0.37780935E-03	-0.37651951E-03
ENLH	-0.11656093E-02	-0.11657492E-02	-0.11659007E-02	-0.11660635E-02	-0.11662377E-02	-0.11664236E-02
ENF	0.34082046E-02	0.34091571E-02	0.34101919E-02	0.34113101E-02	0.34125131E-02	0.34138029E-02
DSYLN	0.00000000E-38	0.00000000E-38	0.00000000E-38	0.00000000E-38	0.00000000E-38	0.00000000E-38
DSYLHN	0.00000000E-38	0.00000000E-38	0.00000000E-38	0.00000000E-38	0.00000000E-38	0.00000000E-38

	19	20	21	22	23	24
SNL	0.63497413E 05	0.63546302E 05	0.63598292E 05	0.63653461E 05	0.63711900E 05	0.63773698E 05
SNLH	0.43990237E 05	0.43997780E 05	0.44005854E 05	0.44014486E 05	0.44023701E 05	0.44033525E 05
SNF	0.56200112E 05	0.56219725E 05	0.56240573E 05	0.56262690E 05	0.56286110E 05	0.56310866E 05
ENL	-0.37514123E-03	-0.37367234E-03	-0.37211075E-03	-0.37045429E-03	-0.36870028E-03	-0.36684619E-03
ENLH	-0.11666206E-02	-0.11668293E-02	-0.11670495E-02	-0.11672813E-02	-0.11675245E-02	-0.11677791E-02
ENF	0.34151813E-02	0.34166503E-02	0.34182117E-02	0.34198682E-02	0.34216222E-02	0.34234763E-02
DSYLN	0.00000000E-38	0.00000000E-38	0.00000000E-38	0.00000000E-38	0.00000000E-38	0.00000000E-38
DSYLHN	0.00000000E-38	0.00000000E-38	0.00000000E-38	0.00000000E-38	0.00000000E-38	0.00000000E-38

70

DESIGN DATA FOR GEODESIC ISOTENSOID CONTOUR

SERVICE CYCLE 2

P NEW	TL NEW	TF NEW
1000.0000	-320.0000	-320.0000

	25	26	27	28	29	30
SNL	0.63838962E 05	0.63907797E 05	0.63980321E 05	0.64056666E 05	0.64136960E 05	0.64221359E 05
SNLH	0.44043987E 05	0.44055125E 05	0.44066964E 05	0.44079554E 05	0.44092941E 05	0.44107163E 05
SNF	0.56337000E 05	0.56364550E 05	0.56393565E 05	0.56424092E 05	0.56456182E 05	0.56489894E 05
ENL	-0.36488888E-03	-0.36282546E-03	-0.36065237E-03	-0.35836599E-03	-0.35596262E-03	-0.35343778E-03
ENLH	-0.11680454E-02	-0.11683230E-02	-0.11686121E-02	-0.11689124E-02	-0.11692238E-02	-0.11695463E-02
ENF	0.34254336E-02	0.34274970E-02	0.34296701E-02	0.34319564E-02	0.34343598E-02	0.34368846E-02
DSYLN	0.00000000E-38	0.00000000E-38	0.00000000E-38	0.00000000E-38	0.00000000E-38	0.00000000E-38
DSYLHN	0.00000000E-38	0.00000000E-38	0.00000000E-38	0.00000000E-38	0.00000000E-38	0.00000000E-38

	31	32	33	34	35	36
SNL	0.64310019E 05	0.64403112E 05	0.64500828E 05	0.64603362E 05	0.64710935E 05	0.64823782E 05
SNLH	0.44122274E 05	0.44138337E 05	0.44155409E 05	0.44173561E 05	0.44192876E 05	0.44213433E 05
SNF	0.56525287E 05	0.56562424E 05	0.56601380E 05	0.56642229E 05	0.56685054E 05	0.56729941E 05
ENL	-0.35078704E-03	-0.34800555E-03	-0.34508784E-03	-0.34202848E-03	-0.33882121E-03	-0.33545936E-03
ENLH	-0.11698797E-02	-0.11702236E-02	-0.11705779E-02	-0.11709422E-02	-0.11713159E-02	-0.11716987E-02
ENF	0.34395355E-02	0.34423169E-02	0.34452345E-02	0.34482939E-02	0.34515013E-02	0.34548631E-02
DSYLN	0.00000000E-38	0.00000000E-38	0.00000000E-38	0.00000000E-38	0.00000000E-38	0.00000000E-38
DSYLHN	0.00000000E-38	0.00000000E-38	0.00000000E-38	0.00000000E-38	0.00000000E-38	0.00000000E-38

	37	38	39	40	41	42
SNL	0.64942162E 05	0.65066354E 05	0.65196658E 05	0.65333409E 05	0.65476968E 05	0.65627731E 05
SNLH	0.44235323E 05	0.44258660E 05	0.44283557E 05	0.44310146E 05	0.44338572E 05	0.44368999E 05
SNF	0.56776990E 05	0.56826301E 05	0.56877991E 05	0.56932181E 05	0.56989007E 05	0.57048614E 05
ENL	-0.33193571E-03	-0.32824241E-03	-0.32437110E-03	-0.32031247E-03	-0.31605645E-03	-0.31159210E-03
ENLH	-0.11720899E-02	-0.11724887E-02	-0.11728942E-02	-0.11733052E-02	-0.11737206E-02	-0.11741387E-02
ENF	0.34583868E-02	0.34620801E-02	0.34659514E-02	0.34700100E-02	0.34742659E-02	0.34787303E-02
DSYLN	0.00000000E-38	0.00000000E-38	0.00000000E-38	0.00000000E-38	0.00000000E-38	0.00000000E-38
DSYLHN	0.00000000E-38	0.00000000E-38	0.00000000E-38	0.00000000E-38	0.00000000E-38	0.00000000E-38

	43	44	45	46	47	48
SNL	0.65786131E 05	0.65952646E 05	0.66127804E 05	0.66312183E 05	0.66506431E 05	0.66711262E 05
SNLH	0.44401614E 05	0.44436628E 05	0.44474283E 05	0.44514847E 05	0.44558629E 05	0.44605993E 05
SNF	0.57111164E 05	0.57176827E 05	0.57245799E 05	0.57318290E 05	0.57394532E 05	0.57474783E 05
ENL	-0.30690753E-03	-0.30198960E-03	-0.29682387E-03	-0.29139468E-03	-0.28568444E-03	-0.27967400E-03
ENLH	-0.11745577E-02	-0.11749752E-02	-0.11753886E-02	-0.11757945E-02	-0.11761892E-02	-0.11765678E-02
ENF	0.34834150E-02	0.34883328E-02	0.34934986E-02	0.34989277E-02	0.35046379E-02	0.35106484E-02
DSYLN	0.00000000E-38	0.00000000E-38	0.00000000E-38	0.00000000E-38	0.00000000E-38	0.00000000E-38
DSYLHN	0.00000000E-38	0.00000000E-38	0.00000000E-38	0.00000000E-38	0.00000000E-38	0.00000000E-38

DESIGN DATA FOR GEODESIC ISOTENSOID CONTOUR

72

SERVICE CYCLE 2

P NEW	TL NEW	TF NEW
1000.0000	-320.0000	-320.0000

	49	50	51	52	53	54
SNL	0.66927475E 05	0.67155964E 05	0.67397730E 05	0.67653909E 05	0.67925778E 05	0.68214802E 05
SNLH	0.44657347E 05	0.44713176E 05	0.44774041E 05	0.44840598E 05	0.44913628E 05	0.44994058E 05
SNF	0.57559329E 05	0.57648484E 05	0.57742602E 05	0.57842077E 05	0.57947357E 05	0.58058937E 05
ENL	-0.27334198E-03	-0.26666465E-03	-0.25961563E-03	-0.25216525E-03	-0.24428040E-03	-0.23592351E-03
ENLH	-0.11769247E-02	-0.11772528E-02	-0.11775437E-02	-0.11777870E-02	-0.11779698E-02	-0.11780763E-02
ENF	0.35169805E-02	0.35236578E-02	0.35307068E-02	0.35381570E-02	0.35460420E-02	0.35543989E-02
DSYLN	0.00000000E-38	0.00000000E-38	0.00000000E-38	0.00000000E-38	0.00000000E-38	0.00000000E-38
DSYLHN	0.00000000E-38	0.00000000E-38	0.00000000E-38	0.00000000E-38	0.00000000E-38	0.00000000E-38

	55	56	57	58	59	60
SNL	0.68522645E 05	0.68851228E 05	0.69202779E 05	0.69579882E 05	0.69985578E 05	0.70423468E 05
SNLH	0.45083002E 05	0.45181805E 05	0.45292110E 05	0.45415953E 05	0.45555855E 05	0.45715017E 05
SNF	0.58177386E 05	0.58303342E 05	0.58437542E 05	0.58580827E 05	0.58734161E 05	0.58898668E 05
ENL	-0.22705235E-03	-0.21761880E-03	-0.20756772E-03	-0.19683650E-03	-0.18535242E-03	-0.17303143E-03
ENLH	-0.11780867E-02	-0.11779762E-02	-0.11777134E-02	-0.11772579E-02	-0.11765580E-02	-0.11755461E-02
ENF	0.35632701E-02	0.35727037E-02	0.35827547E-02	0.35934860E-02	0.36049700E-02	0.36172909E-02
DSYLN	0.00000000E-38	0.00000000E-38	0.00000000E-38	0.00000000E-38	0.00000000E-38	0.00000000E-38
DSYLHN	0.00000000E-38	0.00000000E-38	0.00000000E-38	0.00000000E-38	0.00000000E-38	0.00000000E-38

	61	62	63	64	65	66
SNL	0.70897846E 05	0.71413897E 05	0.71977939E 05	0.72597786E 05	0.73283222E 05	0.74046698E 05
SNLH	0.45897544E 05	0.46108772E 05	0.46355776E 05	0.46648131E 05	0.46999144E 05	0.47427767E 05
SNF	0.59075657E 05	0.59266650E 05	0.59473439E 05	0.59698141E 05	0.59943242E 05	0.60211665E 05
ENL	-0.15977591E-03	-0.14547144E-03	-0.12998388E-03	-0.11315476E-03	-0.94797768E-04	-0.74694079E-04
ENLH	-0.11741320E-02	-0.11721954E-02	-0.11695713E-02	-0.11660298E-02	-0.11612415E-02	-0.11547241E-02
ENF	0.36305465E-02	0.36448510E-02	0.36603386E-02	0.36771677E-02	0.36955247E-02	0.37156283E-02
DSYLN	0.00000000E-38	0.00000000E-38	0.00000000E-38	0.00000000E-38	0.00000000E-38	0.00000000E-38
DSYLHN	0.00000000E-38	0.00000000E-38	0.00000000E-38	0.00000000E-38	0.00000000E-38	0.00000000E-38

	67	68	69	70	71	72
SNL	0.74904388E 05	0.75877704E 05	0.76995731E 05	0.78299045E 05	0.79037467E 05	0.79845954E 05
SNLH	0.47962012E 05	0.48644944E 05	0.49546275E 05	0.50786359E 05	0.51597160E 05	0.52591424E 05
SNF	0.60506790E 05	0.60832365E 05	0.61192114E 05	0.61588418E 05	0.61799777E 05	0.62018217E 05
ENL	-0.52590534E-04	-0.28206458E-04	-0.12629316E-05	0.28418464E-04	0.44248212E-04	0.60608261E-04
ENLH	-0.11457439E-02	-0.11331418E-02	-0.11149905E-02	-0.10878745E-02	-0.10691081E-02	-0.10452104E-02
ENF	0.37377319E-02	0.37621159E-02	0.37890594E-02	0.38187409E-02	0.38345707E-02	0.38509308E-02
DSYLN	0.00000000E-38	0.00000000E-38	0.00000000E-38	0.00000000E-38	0.00000000E-38	0.00000000E-38
DSYLHN	0.00000000E-38	0.00000000E-38	0.00000000E-38	0.00000000E-38	0.00000000E-38	0.00000000E-38

DESIGN DATA FOR GEODESIC ISOTENSO ID CONTOUR

SERVICE CYCLE 2

P NEW	TL NEW	TF NEW
1000.0000	-320.0000	-320.0000

73

	73	74	75	76	77	78
SNL	0.80736211E 05	0.81722543E 05	0.82822256E 05	0.84055604E 05	0.85443846E 05	0.87001004E 05
SNLH	0.53837118E 05	0.55439646E 05	0.57571291E 05	0.60532732E 05	0.64896556E 05	0.71891393E 05
SNF	0.62240373E 05	0.62459420E 05	0.62661641E 05	0.62818926E 05	0.62870468E 05	0.62672525E 05
ENL	0.77246805E-04	0.93652430E-04	0.10879792E-03	0.12057784E-03	0.12443808E-03	0.10961315E-03
ENLH	-0.10141504E-02	-0.97274347E-03	-0.91572858E-03	-0.83383340E-03	-0.70924261E-03	-0.50344055E-03
ENF	0.38675692E-02	0.38839749E-02	0.38991203E-02	0.39109002E-02	0.39147605E-02	0.38999355E-02
DSYLN	0.00000000E-38	0.00000000E-38	0.00000000E-38	0.00000000E-38	0.00000000E-38	0.00000000E-38
DSYLHN	0.00000000E-38	0.00000000E-38	0.00000000E-38	0.00000000E-38	0.00000000E-38	0.00000000E-38

	79	80	81	82	83	84
SNL	0.88704637E 05	0.89576470E 05	0.90415957E 05	0.87941583E 05	0.78814722E 05	0.75457772E 05
SNLH	0.84663987E 05	0.95823823E 05	0.11405567E 06	0.14121796E 06	-0.50593574E 04	-0.15179744E 06
SNF	0.61832446E 05	0.60839459E 05	0.58971616E 05	0.58935067E 05	0.68606220E 05	0.85067140E 05
ENL	0.46694884E-04	-0.27675211E-04	-0.16756813E-03	-0.49314700E-03	0.55401953E-03	0.17868672E-02
ENLH	-0.11724942E-03	0.22580338E-03	0.79158388E-03	0.16684759E-02	-0.28490669E-02	-0.74337306E-02
ENF	0.38370174E-02	0.37626472E-02	0.36227543E-02	0.36200169E-02	0.43443420E-02	0.55771897E-02
DSYLN	0.00000000E-38	0.00000000E-38	0.00000000E-38	0.00000000E-38	0.00000000E-38	0.00000000E-38
DSYLHN	0.00000000E-38	0.00000000E-38	0.00000000E-38	0.00000000E-38	0.00000000E-38	0.00000000E-38

	85	86
SNL	0.13461816E 06	0.13451831E 06
SNLH	0.15066681E 06	0.15066125E 06
SNF	-0.69400500E 03	-0.68947153E 03
ENL	-0.46362493E-02	-0.46359091E-02
ENLH	0.12470325E-01	0.12464288E-01
ENF	-0.84592780E-03	-0.84558826E-03
DSYLN	0.00000000E-38	0.00000000E-38
DSYLHN	0.39326621E 04	0.39707266E 04

DESIGN DATA FOR GEODESIC ISOTENSOID CONTOUR

SERVICE CYCLE	P NEW	TL NEW	TF NEW
2	1000.0000	-320.0000	-320.0000

74

CYLINDER PROPERTIES

SNL	=	0.65492617E 05
SNLH	=	0.10690528E 06
SNF	=	0.49375816E 05
SNFH	=	0.53918108E 05
ENL	=	-0.88624975E-03
ENLH	=	0.79401766E-03
ENF	=	0.29040728E-02
ENFH	=	0.45843400E-02
DSYLHN	=	0.00000000E-38
DSYLHN	=	0.00000000E-38

22

SAMPLE CASE NO. INCONEL METAL-SHELL

DESIGN DATA FOR GEODESIC ISOTENSOID CONTOUR

SERVICE CYCLE 2

P NEW	TL NEW	TF NEW
2000.0000	-320.0000	-320.0000

15

	1	2	3	4	5	6
SNL	0.13713661E 06	0.13713973E 06	0.13714908E 06	0.13716468E 06	0.13718656E 06	0.13721474E 06
SNLH	0.88314335E 05	0.88314792E 05	0.88316149E 05	0.88318423E 05	0.88321615E 05	0.88325725E 05
SNF	0.81727016E 05	0.81728267E 05	0.81732026E 05	0.81738307E 05	0.81747104E 05	0.81758437E 05
ENL	0.15367072E-02	0.15368009E-02	0.15370827E-02	0.15375527E-02	0.15382118E-02	0.15390607E-02
ENLH	-0.44419608E-03	-0.44421009E-03	-0.44425270E-03	-0.44432352E-03	-0.44442268E-03	-0.44455049E-03
ENF	0.53270297E-02	0.53271234E-02	0.53274049E-02	0.53278753E-02	0.53285342E-02	0.53293830E-02
DSYLN	0.00000000E-38	0.00000000E-38	0.00000000E-38	0.00000000E-38	0.00000000E-38	0.00000000E-38
DSYLHN	0.00000000E-38	0.00000000E-38	0.00000000E-38	0.00000000E-38	0.00000000E-38	0.00000000E-38

	7	8	9	10	11	12
SNL	0.13724926E 06	0.13729017E 06	0.13733751E 06	0.13739136E 06	0.13745178E 06	0.13751886E 06
SNLH	0.88330768E 05	0.88336758E 05	0.88343711E 05	0.88351636E 05	0.88360564E 05	0.88370502E 05
SNF	0.81772319E 05	0.81788769E 05	0.81807806E 05	0.81829453E 05	0.81853736E 05	0.81880701E 05
ENL	0.15401003E-02	0.15413323E-02	0.15427579E-02	0.15443793E-02	0.15461982E-02	0.15482174E-02
ENLH	-0.44470672E-03	-0.44489143E-03	-0.44510454E-03	-0.44534644E-03	-0.44561672E-03	-0.44591601E-03
ENF	0.53304227E-02	0.53316547E-02	0.53330805E-02	0.53347018E-02	0.53365205E-02	0.53385400E-02
DSYLN	0.00000000E-38	0.00000000E-38	0.00000000E-38	0.00000000E-38	0.00000000E-38	0.00000000E-38
DSYLHN	0.00000000E-38	0.00000000E-38	0.00000000E-38	0.00000000E-38	0.00000000E-38	0.00000000E-38

	13	14	15	16	17	18
SNL	0.13759269E 06	0.13767337E 06	0.13776102E 06	0.13785576E 06	0.13795773E 06	0.13806707E 06
SNLH	0.88381476E 05	0.88393535E 05	0.88406677E 05	0.88420956E 05	0.88436411E 05	0.88453065E 05
SNF	0.81910368E 05	0.81942781E 05	0.81977990E 05	0.82016038E 05	0.82056978E 05	0.82100864E 05
ENL	0.15504395E-02	0.15528671E-02	0.15555041E-02	0.15583536E-02	0.15614198E-02	0.15647069E-02
ENLH	-0.44624429E-03	-0.44660090E-03	-0.44698706E-03	-0.44740205E-03	-0.44784605E-03	-0.44831954E-03
ENF	0.53407619E-02	0.53431895E-02	0.53458265E-02	0.53486761E-02	0.53517423E-02	0.53550293E-02
DSYLN	0.00000000E-38	0.00000000E-38	0.00000000E-38	0.00000000E-38	0.00000000E-38	0.00000000E-38
DSYLHN	0.00000000E-38	0.00000000E-38	0.00000000E-38	0.00000000E-38	0.00000000E-38	0.00000000E-38

	19	20	21	22	23	24
SNL	0.13818395E 06	0.13830854E 06	0.13844104E 06	0.13858163E 06	0.13873056E 06	0.13888805E 06
SNLH	0.88470991E 05	0.88490215E 05	0.88510792E 05	0.88532788E 05	0.88556271E 05	0.88581308E 05
SNF	0.82147769E 05	0.82197750E 05	0.82250883E 05	0.82307249E 05	0.82366933E 05	0.82430023E 05
ENL	0.15682196E-02	0.15719630E-02	0.15759426E-02	0.15801640E-02	0.15846341E-02	0.15893593E-02
ENLH	-0.44882181E-03	-0.44935361E-03	-0.44991494E-03	-0.45050550E-03	-0.45112532E-03	-0.45177441E-03
ENF	0.53585421E-02	0.53622855E-02	0.53662650E-02	0.53704865E-02	0.53749565E-02	0.53796818E-02
DSYLN	0.00000000E-38	0.00000000E-38	0.00000000E-38	0.00000000E-38	0.00000000E-38	0.00000000E-38
DSYLHN	0.00000000E-38	0.00000000E-38	0.00000000E-38	0.00000000E-38	0.00000000E-38	0.00000000E-38

DESIGN DATA FOR GEODESIC ISOTENSOID CONTOUR

76

SERVICE CYCLE 2	P NEW	TL NEW	TF NEW
	2000.0000	-320.0000	-320.0000

	25	26	27	28	29	30
SNL	0.13905438E 06	0.13922980E 06	0.13941463E 06	0.13960919E 06	0.13981382E 06	0.14002891E 06
SNLH	0.88607970E 05	0.88636351E 05	0.88666524E 05	0.88698610E 05	0.88732723E 05	0.88768967E 05
SNF	0.82496625E 05	0.82566837E 05	0.82640780E 05	0.82718578E 05	0.82800359E 05	0.82886271E 05
ENL	0.15943474E-02	0.15996060E-02	0.16051441E-02	0.16109708E-02	0.16170958E-02	0.16235303E-02
ENLH	-0.45245289E-03	-0.45316032E-03	-0.45389711E-03	-0.45466256E-03	-0.45545612E-03	-0.45627802E-03
ENF	0.53846699E-02	0.53899285E-02	0.53954665E-02	0.54012932E-02	0.54074182E-02	0.54138526E-02
DSYLN	0.00000000E-38	0.00000000E-38	0.00000000E-38	0.00000000E-38	0.00000000E-38	0.00000000E-38
DSYLHN	0.00000000E-38	0.00000000E-38	0.00000000E-38	0.00000000E-38	0.00000000E-38	0.00000000E-38

	31	32	33	34	35	36
SNL	0.14025485E 06	0.14049210E 06	0.14074112E 06	0.14100243E 06	0.14127657E 06	0.14156416E 06
SNLH	0.88807479E 05	0.88848412E 05	0.88891919E 05	0.88938179E 05	0.88987400E 05	0.89039785E 05
SNF	0.82976470E 05	0.83071114E 05	0.83170394E 05	0.83274494E 05	0.83383630E 05	0.83498025E 05
ENL	0.16302856E-02	0.16373742E-02	0.16448098E-02	0.16526065E-02	0.16607801E-02	0.16693478E-02
ENLH	-0.45712764E-03	-0.45800414E-03	-0.45890715E-03	-0.45983559E-03	-0.46078798E-03	-0.46176353E-03
ENF	0.54206081E-02	0.54276965E-02	0.54351321E-02	0.54429288E-02	0.54511025E-02	0.54596702E-02
DSYLN	0.00000000E-38	0.00000000E-38	0.00000000E-38	0.00000000E-38	0.00000000E-38	0.00000000E-38
DSYLHN	0.00000000E-38	0.00000000E-38	0.00000000E-38	0.00000000E-38	0.00000000E-38	0.00000000E-38

	37	38	39	40	41	42
SNL	0.14175860E 06	0.14180612E 06	0.14185548E 06	0.14190677E 06	0.14196003E 06	0.14201534E 06
SNLH	0.89089980E 05	0.89135133E 05	0.89183081E 05	0.89234040E 05	0.89288246E 05	0.89345961E 05
SNF	0.83885894E 05	0.84677459E 05	0.85499728E 05	0.86353713E 05	0.87240488E 05	0.88161219E 05
ENL	0.16984019E-02	0.17576862E-02	0.18192708E-02	0.18832303E-02	0.19496467E-02	0.20186037E-02
ENLH	-0.47378225E-03	-0.50221087E-03	-0.53171330E-03	-0.56232308E-03	-0.59407373E-03	-0.62699971E-03
ENF	0.54887197E-02	0.55480044E-02	0.56095885E-02	0.56735481E-02	0.57399636E-02	0.58089221E-02
DSYLN	0.19099609E 02	0.66617187E 02	0.11598633E 03	0.16726953E 03	0.22052930E 03	0.27583984E 03
DSYLHN	0.00000000E-38	0.00000000E-38	0.00000000E-38	0.00000000E-38	0.00000000E-38	0.00000000E-38

	43	44	45	46	47	48
SNL	0.14207277E 06	0.14213242E 06	0.14219436E 06	0.14225870E 06	0.14232555E 06	0.14239501E 06
SNLH	0.89407486E 05	0.89473162E 05	0.89543368E 05	0.89618531E 05	0.89699129E 05	0.89785731E 05
SNF	0.89117143E 05	0.90109619E 05	0.91140112E 05	0.92210189E 05	0.93321601E 05	0.94476220E 05
ENL	0.20901982E-02	0.21645270E-02	0.22417076E-02	0.23218535E-02	0.24050970E-02	0.24915721E-02
ENLH	-0.66114293E-03	-0.69654157E-03	-0.73324406E-03	-0.77129510E-03	-0.81074872E-03	-0.85165800E-03
ENF	0.58805164E-02	0.59548484E-02	0.60320276E-02	0.61121715E-02	0.61954111E-02	0.62818868E-02
DSYLN	0.33327539E 03	0.39291797E 03	0.45486328E 03	0.51920508E 03	0.58605078E 03	0.65551367E 03
DSYLHN	0.00000000E-38	0.00000000E-38	0.00000000E-38	0.00000000E-38	0.00000000E-38	0.00000000E-38

71

DESIGN DATA FOR GEODESIC ISOTENSOID CONTOUR

SERVICE CYCLE 2

P NEW	TL NEW	TF NEW
2000.0000	-320.0000	-320.0000

77

	49	50	51	52	53	54
SNL	0.14246722E 06	0.14254231E 06	0.14262045E 06	0.14270179E 06	0.14278653E 06	0.14287487E 06
SNLH	0.89878967E 05	0.89979580E 05	0.90088422E 05	0.90206484E 05	0.90334938E 05	0.90475156E 05
SNF	0.95676100E 05	0.96923481E 05	0.98220826E 05	0.99570855E 05	0.10097658E 06	0.10244134E 06
ENL	0.25814354E-02	0.26748564E-02	0.27720194E-02	0.28731331E-02	0.29784154E-02	0.30881196E-02
ENLH	-0.89408254E-03	-0.93808753E-03	-0.98374189E-03	-0.10311239E-02	-0.10803107E-02	-0.11313910E-02
ENF	0.63717523E-02	0.64651755E-02	0.65623407E-02	0.66634517E-02	0.67687343E-02	0.68784375E-02
DSYLN	0.72772266E 03	0.80281641E 03	0.88094922E 03	0.96229297E 03	0.10470293E 04	0.11353711E 04
DSYLHN	0.00000000E-38	0.00000000E-38	0.00000000E-38	0.00000000E-38	0.00000000E-38	0.00000000E-38

	55	56	57	58	59	60
SNL	0.14296705E 06	0.14306333E 06	0.14316400E 06	0.14326939E 06	0.14337990E 06	0.14349595E 06
SNLH	0.90628780E 05	0.90797772E 05	0.90984507E 05	0.91191906E 05	0.91423543E 05	0.91683910E 05
SNF	0.10396881E 06	0.10556315E 06	0.10722904E 06	0.10897170E 06	0.11079708E 06	0.11271198E 06
ENL	0.32025196E-02	0.33219337E-02	0.34466993E-02	0.35772130E-02	0.37139255E-02	0.38573436E-02
ENLH	-0.11844605E-02	-0.12396228E-02	-0.12969848E-02	-0.13566630E-02	-0.14187915E-02	-0.14834980E-02
ENF	0.69928386E-02	0.71122471E-02	0.72370148E-02	0.73675321E-02	0.75042446E-02	0.76476617E-02
DSYLN	0.12275508E 04	0.13238301E 04	0.14245000E 04	0.15298945E 04	0.16404004E 04	0.17564512E 04
DSYLHN	0.00000000E-38	0.00000000E-38	0.00000000E-38	0.00000000E-38	0.00000000E-38	0.00000000E-38

	61	62	63	64	65	66
SNL	0.14361805E 06	0.14374679E 06	0.14388288E 06	0.14402712E 06	0.14418051E 06	0.14434426E 06
SNLH	0.91978724E 05	0.92315315E 05	0.92703312E 05	0.93155578E 05	0.93689801E 05	0.94330836E 05
SNF	0.11472419E 06	0.11684273E 06	0.11907803E 06	0.12144240E 06	0.12395032E 06	0.12661900E 06
ENL	0.40080521E-02	0.41667178E-02	0.43341361E-02	0.45112159E-02	0.46990469E-02	0.48989218E-02
ENLH	-0.15509239E-02	-0.16212061E-02	-0.16944807E-02	-0.17708575E-02	-0.18504074E-02	-0.19331060E-02
ENF	0.77983672E-02	0.79570358E-02	0.81244495E-02	0.83015305E-02	0.84893624E-02	0.86892337E-02
DSYLN	0.18785547E 04	0.20072969E 04	0.21433789E 04	0.22876172E 04	0.24410098E 04	0.26047637E 04
DSYLHN	0.00000000E-38	0.00000000E-38	0.00000000E-38	0.00000000E-38	0.00000000E-38	0.00000000E-38

	67	68	69	70	71	72
SNL	0.14451987E 06	0.14470919E 06	0.14491463E 06	0.14513929E 06	0.14526005E 06	0.14538724E 06
SNLH	0.95114967E 05	0.96097237E 05	0.97365551E 05	0.99069618E 05	0.10016344E 06	0.10148708E 06
SNF	0.12946906E 06	0.13252519E 06	0.13581677E 06	0.13937756E 06	0.14126993E 06	0.14324208E 06
ENL	0.51123790E-02	0.53412665E-02	0.55877894E-02	0.58544773E-02	0.59962097E-02	0.61439156E-02
ENLH	-0.20187477E-02	-0.21067763E-02	-0.21959309E-02	-0.22834491E-02	-0.23249004E-02	-0.23631582E-02
ENF	0.89026906E-02	0.91315808E-02	0.93781052E-02	0.96447919E-02	0.97865214E-02	0.99342266E-02
DSYLN	0.27803691E 04	0.29696953E 04	0.31751367E 04	0.33997930E 04	0.35205527E 04	0.36477383E 04
DSYLHN	0.00000000E-38	0.00000000E-38	0.00000000E-38	0.00000000E-38	0.00000000E-38	0.00000000E-38

78

DESIGN DATA FOR GEODESIC ISOTENSOID CONTOUR

SERVICE CYCLE 2

P NEW	TL NEW	TF NEW
2000.0000	-320.0000	-320.0000

	73	74	75	76	77	78
SNL	0.14552156E 06	0.14566379E 06	0.14581481E 06	0.14597535E 06	0.13114751E 06	0.13557425E 06
SNLH	0.10312279E 06	0.10519747E 06	0.10791772E 06	0.11164294E 06	0.10933691E 06	0.11858225E 06
SNF	0.14529589E 06	0.14742921E 06	0.14963092E 06	0.15187024E 06	0.17124300E 06	0.16795644E 06
ENL	0.62977422E-02	0.64575050E-02	0.66224124E-02	0.67901213E-02	0.11565831E-02	0.12114861E-02
ENLH	-0.23960842E-02	-0.24201738E-02	-0.24294740E-02	-0.24131497E-02	0.27164482E-03	0.52205689E-03
ENF	0.10088047E-01	0.10247824E-01	0.10412721E-01	0.10580436E-01	0.12031367E-01	0.11785219E-01
DSYLN	0.37820605E 04	0.39242949E 04	0.40753105E 04	0.42358535E 04	0.00000000E-38	0.00000000E-38
DSYLHN	0.00000000E-38	0.00000000E-38	0.00000000E-38	0.00000000E-38	0.00000000E-38	0.00000000E-38

	79	80	81	82	83	84
SNL	0.14650850E 06	0.15945071E 06	0.20146168E 06	-0.14127690E 07	0.14489805E 06	0.14438050E 06
SNLH	0.14116798E 06	0.16929993E 06	0.25904320E 06	-0.31930106E 07	-0.41475742E 05	-0.33527592E 06
SNF	0.15721734E 06	0.14309118E 06	0.95106948E 05	0.19746650E 07	0.15244759E 06	0.17954703E 06
ENL	0.71906030E-02	0.61326094E-02	0.25388088E-02	-0.17282013E-01	0.68333607E-02	0.88629882E-02
ENLH	-0.18194065E-02	0.24692705E-01	0.11104671E 00	-0.89513098E-01	-0.65524241E-02	-0.15468085E-01
ENF	0.10980910E-01	0.99229253E-02	0.63291254E-02	0.14709943E 00	0.10623678E-01	0.12653302E-01
DSYLN	0.47690039E 04	0.17711207E 05	0.59722178E 05	0.00000000E-38	0.31585547E 04	0.26410020E 04
DSYLHN	0.00000000E-38	0.27560432E 05	0.11730371E 06	0.00000000E-38	0.00000000E-38	0.00000000E-38

	85	86
SNL	0.26989809E 06	0.26903662E 06
SNLH	0.40796974E 06	0.40623355E 06
SNF	-0.59707464E 04	-0.58597365E 04
ENL	-0.50314467E-02	-0.50231393E-02
ENLH	0.25514862E 00	0.25350864E 00
ENF	-0.12411316E-02	-0.12328175E-02
DSYLN	0.12815859E 06	0.12729712E 06
DSYLHN	0.25730293E 06	0.25557230E 06

79

DESIGN DATA FOR GEODESIC ISOTENSOID CONTOUR

SERVICE CYCLE 2

P NEW	TL NEW	TF NEW
2000.0000	-320.0000	-320.0000

CYLINDER PROPERTIES

SNL	=	0.14471657E 06
SNLH	=	0.14964963E 06
SNF	=	0.60748906E 05
SNFH	=	0.16697553E 06
ENL	=	-0.34457829E-04
ENLH	=	0.92615058E-02
ENF	=	0.37558652E-02
ENFH	=	0.13051823E-01
DSYLHN	=	0.29770703E 04
DSYLHN	=	0.79101289E 04

DESIGN DATA FOR GEODESIC ISOTENSOID CONTOUR

SERVICE CYCLE 2

P NEW	TL NEW	TF NEW
3000.0000	-320.0000	-320.0000

80

	1	2	3	4	5	6
SNL	0.15305246E 06	0.15305270E 06	0.15305341E 06	0.15305459E 06	0.15305625E 06	0.15305839E 06
SNLH	0.13027772E 06	0.13027789E 06	0.13027837E 06	0.13027918E 06	0.13028031E 06	0.13028176E 06
SNF	0.26831084E 06	0.26831477E 06	0.26832661E 06	0.26834637E 06	0.26837407E 06	0.26840972E 06
ENL	0.15510987E-01	0.15511283E-01	0.15512169E-01	0.15513652E-01	0.15515725E-01	0.15518398E-01
ENLH	-0.62724583E-02	-0.62726017E-02	-0.62730329E-02	-0.62737519E-02	-0.62747577E-02	-0.62760551E-02
ENF	0.19301304E-01	0.19301599E-01	0.19302486E-01	0.19303966E-01	0.19306040E-01	0.19308710E-01
DSYLN	0.11312961E 05	0.11313197E 05	0.11313908E 05	0.11315094E 05	0.11316752E 05	0.11318889E 05
DSYLHN	0.00000000E-38	0.00000000E-38	0.00000000E-38	0.00000000E-38	0.00000000E-38	0.00000000E-38

	7	8	9	10	11	12
SNL	0.15306100E 06	0.15306409E 06	0.15306767E 06	0.15307173E 06	0.15307628E 06	0.15308132E 06
SNLH	0.13028355E 06	0.13028566E 06	0.13028813E 06	0.13029092E 06	0.13029408E 06	0.13029759E 06
SNF	0.26845335E 06	0.26850500E 06	0.26856468E 06	0.26863245E 06	0.26870834E 06	0.26879244E 06
ENL	0.15521665E-01	0.15525530E-01	0.15529997E-01	0.15535076E-01	0.15540757E-01	0.15547059E-01
ENLH	-0.62776411E-02	-0.62795168E-02	-0.62816840E-02	-0.62841483E-02	-0.62869040E-02	-0.62899606E-02
ENF	0.19311978E-01	0.19315846E-01	0.19320316E-01	0.19325392E-01	0.19331075E-01	0.19337374E-01
DSYLN	0.11321504E 05	0.11324596E 05	0.11328170E 05	0.11332232E 05	0.11336777E 05	0.11341818E 05
DSYLHN	0.00000000E-38	0.00000000E-38	0.00000000E-38	0.00000000E-38	0.00000000E-38	0.00000000E-38

	13	14	15	16	17	18
SNL	0.15308685E 06	0.15309288E 06	0.15309941E 06	0.15310646E 06	0.15311401E 06	0.15312209E 06
SNLH	0.13030145E 06	0.13030570E 06	0.13031031E 06	0.13031532E 06	0.13032074E 06	0.13032656E 06
SNF	0.26888475E 06	0.26898540E 06	0.26909445E 06	0.26921194E 06	0.26933802E 06	0.26947273E 06
ENL	0.15553977E-01	0.15561515E-01	0.15569679E-01	0.15578481E-01	0.15587920E-01	0.15598011E-01
ENLH	-0.62933153E-02	-0.62969707E-02	-0.63009279E-02	-0.63051952E-02	-0.63097680E-02	-0.63146575E-02
ENF	0.19344288E-01	0.19351826E-01	0.19359994E-01	0.19368793E-01	0.19378236E-01	0.19388325E-01
DSYLN	0.11347354E 05	0.11353385E 05	0.11359916E 05	0.11366961E 05	0.11374512E 05	0.11382588E 05
DSYLHN	0.00000000E-38	0.00000000E-38	0.00000000E-38	0.00000000E-38	0.00000000E-38	0.00000000E-38

	19	20	21	22	23	24
SNL	0.15313068E 06	0.15313981E 06	0.15314948E 06	0.15315971E 06	0.15317047E 06	0.15318181E 06
SNLH	0.13033283E 06	0.13033953E 06	0.13034668E 06	0.13035431E 06	0.13036245E 06	0.13037110E 06
SNF	0.26961620E 06	0.26976854E 06	0.26992987E 06	0.27010029E 06	0.27027999E 06	0.27046905E 06
ENL	0.15608757E-01	0.15620166E-01	0.15632247E-01	0.15645019E-01	0.15658475E-01	0.15672632E-01
ENLH	-0.63198608E-02	-0.63253854E-02	-0.63312341E-02	-0.63374153E-02	-0.63439243E-02	-0.63507704E-02
ENF	0.19399070E-01	0.19410480E-01	0.19422563E-01	0.19435326E-01	0.19448785E-01	0.19462945E-01
DSYLN	0.11391186E 05	0.11400316E 05	0.11409984E 05	0.11420207E 05	0.11430977E 05	0.11442309E 05
DSYLHN	0.00000000E-38	0.00000000E-38	0.00000000E-38	0.00000000E-38	0.00000000E-38	0.00000000E-38

DESIGN DATA FOR GEODESIC ISOTENSOID CONTOUR

81

SERVICE CYCLE 2

P NEW	TL NEW	TF NEW
3000.0000	-320.0000	-320.0000

	25	26	27	28	29	30
SNL	0.15319372E 06	0.15320621E 06	0.15321929E 06	0.15323299E 06	0.15324730E 06	0.15326224E 06
SNLH	0.13038029E 06	0.13039004E 06	0.13040038E 06	0.13041134E 06	0.13042298E 06	0.13043529E 06
SNF	0.27066770E 06	0.27087605E 06	0.27109430E 06	0.27132266E 06	0.27156131E 06	0.27181048E 06
ENL	0.15687513E-01	0.15703115E-01	0.15719461E-01	0.15736566E-01	0.15754434E-01	0.15773098E-01
ENLH	-0.63579640E-02	-0.63655021E-02	-0.63733969E-02	-0.63816549E-02	-0.63902762E-02	-0.63992765E-02
ENF	0.19477822E-01	0.19493427E-01	0.19509773E-01	0.19526876E-01	0.19544750E-01	0.19563412E-01
DSYLN	0.11454221E 05	0.11466711E 05	0.11479797E 05	0.11493492E 05	0.11507801E 05	0.11522746E 05
DSYLHN	0.00000000E-38	0.00000000E-38	0.00000000E-38	0.00000000E-38	0.00000000E-38	0.00000000E-38

	31	32	33	34	35	36
SNL	0.15327784E 06	0.15329409E 06	0.15331102E 06	0.15332864E 06	0.15334698E 06	0.15336606E 06
SNLH	0.13044833E 06	0.13046214E 06	0.13047676E 06	0.13049225E 06	0.13050868E 06	0.13052608E 06
SNF	0.27207041E 06	0.27234133E 06	0.27262354E 06	0.27291729E 06	0.27322291E 06	0.27354070E 06
ENL	0.15792568E-01	0.15812856E-01	0.15833997E-01	0.15855997E-01	0.15878883E-01	0.15902688E-01
ENLH	-0.64086614E-02	-0.64184338E-02	-0.64286113E-02	-0.64391939E-02	-0.64501966E-02	-0.64616304E-02
ENF	0.19582879E-01	0.19603170E-01	0.19624306E-01	0.19646307E-01	0.19669196E-01	0.19692997E-01
DSYLN	0.11538338E 05	0.11554588E 05	0.11571521E 05	0.11589146E 05	0.11607484E 05	0.11626559E 05
DSYLHN	0.00000000E-38	0.00000000E-38	0.00000000E-38	0.00000000E-38	0.00000000E-38	0.00000000E-38

	37	38	39	40	41	42
SNL	0.15338588E 06	0.15340649E 06	0.15342790E 06	0.15345014E 06	0.15347324E 06	0.15349722E 06
SNLH	0.13054453E 06	0.13056411E 06	0.13058491E 06	0.13060702E 06	0.13063054E 06	0.13065557E 06
SNF	0.27387104E 06	0.27421430E 06	0.27457088E 06	0.27494120E 06	0.27532575E 06	0.27572502E 06
ENL	0.15927428E-01	0.15953139E-01	0.15979840E-01	0.16007579E-01	0.16036382E-01	0.16066285E-01
ENLH	-0.64735046E-02	-0.64858329E-02	-0.64986237E-02	-0.65118990E-02	-0.65256677E-02	-0.65399468E-02
ENF	0.19717738E-01	0.19743447E-01	0.19770153E-01	0.19797888E-01	0.19826690E-01	0.19856593E-01
DSYLN	0.11627287E 05	0.11600377E 05	0.11572412E 05	0.11543371E 05	0.11513209E 05	0.11481883E 05
DSYLHN	0.00000000E-38	0.00000000E-38	0.00000000E-38	0.00000000E-38	0.00000000E-38	0.00000000E-38

	43	44	45	46	47	48
SNL	0.15352212E 06	0.15354799E 06	0.15357485E 06	0.15360275E 06	0.15363174E 06	0.15366187E 06
SNLH	0.13068225E 06	0.13071074E 06	0.13074120E 06	0.13077380E 06	0.13080876E 06	0.13084633E 06
SNF	0.27613957E 06	0.27656998E 06	0.27701685E 06	0.27748089E 06	0.27796286E 06	0.27846356E 06
ENL	0.16097328E-01	0.16129562E-01	0.16163031E-01	0.16197783E-01	0.16233887E-01	0.16271388E-01
ENLH	-0.65547516E-02	-0.65701012E-02	-0.65860166E-02	-0.66025167E-02	-0.66196280E-02	-0.66373685E-02
ENF	0.19887641E-01	0.19919876E-01	0.19953345E-01	0.19988100E-01	0.20024196E-01	0.20061697E-01
DSYLN	0.11449352E 05	0.11415572E 05	0.11380490E 05	0.11344049E 05	0.11306195E 05	0.11266855E 05
DSYLHN	0.00000000E-38	0.00000000E-38	0.00000000E-38	0.00000000E-38	0.00000000E-38	0.00000000E-38

DESIGN DATA FOR GEODESIC ISOTENSOID CONTOUR

82

SERVICE CYCLE 2	P NEW	TL NEW	TF NEW
	3000.0000	-320.0000	-320.0000

	49	50	51	52	53	54
SNL	0.15369318E 06	0.15372574E 06	0.15375963E 06	0.15379491E 06	0.15383165E 06	0.15386996E 06
SNLH	0.13088677E 06	0.13093041E 06	0.13097762E 06	0.13102884E 06	0.13108456E 06	0.13114538E 06
SNF	0.27898390E 06	0.27952485E 06	0.28008745E 06	0.28067289E 06	0.28128249E 06	0.28191770E 06
ENL	0.16310360E-01	0.16350868E-01	0.16393003E-01	0.16436860E-01	0.16482513E-01	0.16530086E-01
ENLH	-0.66557667E-02	-0.66748470E-02	-0.66946463E-02	-0.67151964E-02	-0.67365250E-02	-0.67586746E-02
ENF	0.20100668E-01	0.20141183E-01	0.20183319E-01	0.20227165E-01	0.20272822E-01	0.20320396E-01
DSYLN	0.11225963E 05	0.11183430E 05	0.11139180E 05	0.11093117E 05	0.11045127E 05	0.10995092E 05
DSYLHN	0.00000000E-38	0.00000000E-38	0.00000000E-38	0.00000000E-38	0.00000000E-38	0.00000000E-38

	55	56	57	58	59	60
SNL	0.15390994E 06	0.15395169E 06	0.15399535E 06	0.15404105E 06	0.15408897E 06	0.15413930E 06
SNLH	0.13121202E 06	0.13128533E 06	0.13136632E 06	0.13145630E 06	0.13155678E 06	0.13166971E 06
SNF	0.28258008E 06	0.28327145E 06	0.28399389E 06	0.28474961E 06	0.28554118E 06	0.28637157E 06
ENL	0.16579696E-01	0.16631486E-01	0.16685590E-01	0.16742183E-01	0.16801467E-01	0.16863668E-01
ENLH	-0.67816874E-02	-0.68056118E-02	-0.68304847E-02	-0.68563626E-02	-0.68833026E-02	-0.69113654E-02
ENF	0.20370006E-01	0.20421786E-01	0.20475893E-01	0.20532493E-01	0.20591779E-01	0.20653971E-01
DSYLN	0.10942887E 05	0.10888365E 05	0.10831350E 05	0.10771656E 05	0.10709070E 05	0.10643352E 05
DSYLHN	0.00000000E-38	0.00000000E-38	0.00000000E-38	0.00000000E-38	0.00000000E-38	0.00000000E-38

	61	62	63	64	65	66
SNL	0.15419225E 06	0.15424808E 06	0.15430709E 06	0.15436964E 06	0.15443616E 06	0.15450718E 06
SNLH	0.13179760E 06	0.13194361E 06	0.13211193E 06	0.13230811E 06	0.13253986E 06	0.13281794E 06
SNF	0.28724419E 06	0.28816291E 06	0.28913223E 06	0.29015756E 06	0.29124512E 06	0.29240237E 06
ENL	0.16929019E-01	0.16997825E-01	0.17070425E-01	0.17147218E-01	0.17228671E-01	0.17315354E-01
ENLH	-0.69406016E-02	-0.69710789E-02	-0.70028530E-02	-0.70359731E-02	-0.70704675E-02	-0.71063307E-02
ENF	0.20719326E-01	0.20788134E-01	0.20860732E-01	0.20937524E-01	0.21018978E-01	0.21105650E-01
DSYLN	0.10574195E 05	0.10501283E 05	0.10424215E 05	0.10342525E 05	0.10255652E 05	0.10162918E 05
DSYLHN	0.00000000E-38	0.00000000E-38	0.00000000E-38	0.00000000E-38	0.00000000E-38	0.00000000E-38

	67	68	69	70	71	72
SNL	0.15458333E 06	0.15466543E 06	0.15475452E 06	0.15485194E 06	0.15490431E 06	0.15495946E 06
SNLH	0.13315811E 06	0.13358423E 06	0.13413445E 06	0.13487372E 06	0.13534826E 06	0.13592249E 06
SNF	0.29363830E 06	0.29496358E 06	0.29639096E 06	0.29793508E 06	0.29875562E 06	0.29961075E 06
ENL	0.17407912E-01	0.17507167E-01	0.17614068E-01	0.17729719E-01	0.17791182E-01	0.17855231E-01
ENLH	-0.71434627E-02	-0.71816300E-02	-0.72202856E-02	-0.72582292E-02	-0.72762000E-02	-0.72927823E-02
ENF	0.21198215E-01	0.21297473E-01	0.21404378E-01	0.21520025E-01	0.21581480E-01	0.21645525E-01
DSYLN	0.10063459E 05	0.99562324E 04	0.98398809E 04	0.97126484E 04	0.96442598E 04	0.95722266E 04
DSYLHN	0.00000000E-38	0.00000000E-38	0.00000000E-38	0.00000000E-38	0.00000000E-38	0.00000000E-38

DESIGN DATA FOR GEODESIC ISOTENSOID CONTOUR

83

SERVICE CYCLE 2

P NEW	TL NEW	TF NEW
3000.0000	-320.0000	-320.0000

	73	74	75	76	77	78
SNL	0.15501771E 06	0.15507937E 06	0.15514486E 06	0.15521446E 06	0.14999092E 06	0.15116142E 06
SNLH	0.13663214E 06	0.13753222E 06	0.13871244E 06	0.14032867E 06	0.13995097E 06	0.14364117E 06
SNF	0.30050125E 06	0.30142623E 06	0.30238074E 06	0.30335145E 06	0.31037021E 06	0.30981761E 06
ENL	0.17921930E-01	0.17991188E-01	0.18062692E-01	0.18135387E-01	0.11576601E-01	0.11836246E-01
ENLH	-0.73070488E-02	-0.73174717E-02	-0.73214858E-02	-0.73143693E-02	-0.40451333E-02	-0.23350770E-02
ENF	0.21712220E-01	0.21781496E-01	0.21852984E-01	0.21925686E-01	0.22451360E-01	0.22409972E-01
DSYLN	0.94961484E 04	0.94155781E 04	0.93300488E 04	0.92391055E 04	0.82514238E 04	0.94219238E 04
DSYLHN	0.00000000E-38	0.00000000E-38	0.00000000E-38	0.00000000E-38	0.00000000E-38	0.19016758E 04

	79	80	81	82	83	84
SNL	0.16466749E 06	0.17259362E 06	0.31783273E 06	-0.12951807E 07	0.15274524E 06	0.15179751E 06
SNLH	0.16154346E 06	0.17842722E 06	0.41201544E 06	-0.29869353E 07	-0.22132598E 06	-0.81692602E 06
SNF	0.29564915E 06	0.28699815E 06	0.12534735E 06	0.19989493E 07	0.30597787E 06	0.36261671E 06
ENL	0.17558518E-01	0.16910590E-01	0.52645518E-01	-0.15463223E-01	0.18332092E-01	0.22574079E-01
ENLH	0.11671514E-01	0.27903551E-01	0.23012548E 00	-0.84104062E-01	-0.17138306E-01	-0.35276121E-01
ENF	0.21348819E-01	0.20700899E-01	0.85939935E-02	0.14891821E 00	0.22122393E-01	0.26364383E-01
DSYLN	0.18158990E 05	0.13142920E 05	0.11637106E 06	0.00000000E-38	0.78471875E 04	0.74170078E 04
DSYLHN	0.19803957E 05	0.91272930E 04	0.15297224E 06	0.00000000E-38	0.00000000E-38	0.00000000E-38

	85	86
SNL	0.40526574E 06	0.40355494E 06
SNLH	0.67940662E 06	0.67595873E 06
SNF	-0.11854901E 05	-0.11634476E 05
ENL	-0.54721392E-02	-0.54556371E-02
ENLH	0.51111979E 00	0.50786293E 00
ENF	-0.16818278E-02	-0.16653191E-02
DSYLN	0.13536765E 06	0.13451832E 06
DSYLHN	0.27143688E 06	0.26972518E 06

84

DESIGN DATA FOR GEODESIC ISOTENSO ID CONTOUR

SERVICE CYCLE	P NEW	TL NEW	TF NEW
2	3000.0000	-320.0000	-320.0000

CYLINDER PROPERTIES

SNL	=	0.16409896E 06
SNLH	=	0.16731129E 06
SNF	=	0.23773898E 06
SNFH	=	0.30067023E 06
ENL	=	0.13221279E-01
ENLH	=	0.19274647E-01
ENF	=	0.17011612E-01
ENFH	=	0.23064945E-01
DSYLHN	=	0.19382396E 05
DSYLHN	=	0.17661658E 05

SAMPLE CASE NO. INCONEL METAL-SHELL

DESIGN DATA FOR GEODESIC ISOTENSOID CONTOUR

SERVICE CYCLE 2

P NEW 4000.0000

TL NEW -320.0000

TF NEW -320.0000

85

	1	2	3	4	5	6
SNL	0.17818178E 06	0.17818186E 06	0.17818207E 06	0.17818245E 06	0.17818297E 06	0.17818365E 06
SNLH	0.17262500E 06	0.17262504E 06	0.17262515E 06	0.17262536E 06	0.17262565E 06	0.17262600E 06
SNF	0.42939556E 06	0.42939644E 06	0.42939917E 06	0.42940372E 06	0.42941013E 06	0.42941839E 06
ENL	0.27575502E-01	0.27575570E-01	0.27575772E-01	0.27576117E-01	0.27576593E-01	0.27577211E-01
ENLH	0.17104171E-01	0.17104182E-01	0.17104188E-01	0.17104204E-01	0.17104241E-01	0.17104266E-01
ENF	0.31365813E-01	0.31365879E-01	0.31366084E-01	0.31366425E-01	0.31366905E-01	0.31367523E-01
DSYLN	0.25129324E 05	0.25129164E 05	0.25128668E 05	0.25127859E 05	0.25126725E 05	0.25125260E 05
DSYLHN	0.30885498E 05	0.30885545E 05	0.30885656E 05	0.30885857E 05	0.30886148E 05	0.30886504E 05

	7	8	9	10	11	12
SNL	0.17818447E 06	0.17818545E 06	0.17818657E 06	0.17818786E 06	0.17818930E 06	0.17819090E 06
SNLH	0.17262644E 06	0.17262696E 06	0.17262758E 06	0.17262827E 06	0.17262907E 06	0.17262994E 06
SNF	0.42942849E 06	0.42944046E 06	0.42945429E 06	0.42947000E 06	0.42948754E 06	0.42950704E 06
ENL	0.27577968E-01	0.27578871E-01	0.27579894E-01	0.27581075E-01	0.27582391E-01	0.27583853E-01
ENLH	0.17104300E-01	0.17104343E-01	0.17104414E-01	0.17104474E-01	0.17104569E-01	0.17104657E-01
ENF	0.31368280E-01	0.31369177E-01	0.31370212E-01	0.31371389E-01	0.31372703E-01	0.31374163E-01
DSYLN	0.25123465E 05	0.25121354E 05	0.25118904E 05	0.25116127E 05	0.25113029E 05	0.25109586E 05
DSYLHN	0.30886941E 05	0.30887467E 05	0.30888084E 05	0.30888775E 05	0.30889574E 05	0.30890443E 05

	13	14	15	16	17	18
SNL	0.17819266E 06	0.17819458E 06	0.17819665E 06	0.17819890E 06	0.17820132E 06	0.17820390E 06
SNLH	0.17263089E 06	0.17263197E 06	0.17263310E 06	0.17263435E 06	0.17263571E 06	0.17263714E 06
SNF	0.42952843E 06	0.42955173E 06	0.42957701E 06	0.42960420E 06	0.42963340E 06	0.42966461E 06
ENL	0.27585462E-01	0.27587197E-01	0.27589090E-01	0.27591131E-01	0.27593318E-01	0.27595653E-01
ENLH	0.17104747E-01	0.17104893E-01	0.17105018E-01	0.17105171E-01	0.17105354E-01	0.17105542E-01
ENF	0.31375764E-01	0.31377510E-01	0.31379403E-01	0.31381440E-01	0.31383627E-01	0.31385964E-01
DSYLN	0.25105805E 05	0.25101693E 05	0.25097238E 05	0.25092441E 05	0.25087309E 05	0.25081811E 05
DSYLHN	0.30891393E 05	0.30892469E 05	0.30893605E 05	0.30894852E 05	0.30896207E 05	0.30897645E 05

	19	20	21	22	23	24
SNL	0.17820666E 06	0.17820960E 06	0.17821272E 06	0.17821602E 06	0.17821952E 06	0.17822320E 06
SNLH	0.17263872E 06	0.17264039E 06	0.17264216E 06	0.17264406E 06	0.17264609E 06	0.17264826E 06
SNF	0.42969780E 06	0.42973307E 06	0.42977044E 06	0.42980986E 06	0.42985143E 06	0.42989514E 06
ENL	0.27598138E-01	0.27600781E-01	0.27603582E-01	0.27606537E-01	0.27609656E-01	0.27612928E-01
ENLH	0.17105783E-01	0.17106035E-01	0.17106306E-01	0.17106620E-01	0.17106974E-01	0.17107375E-01
ENF	0.31388450E-01	0.31391092E-01	0.31393890E-01	0.31396843E-01	0.31399956E-01	0.31403230E-01
DSYLN	0.25075977E 05	0.25069785E 05	0.25063234E 05	0.25056314E 05	0.25049043E 05	0.25041396E 05
DSYLHN	0.30899219E 05	0.30900889E 05	0.30902664E 05	0.30904564E 05	0.30906596E 05	0.30908758E 05

86

DESIGN DATA FOR GEODESIC ISOTENSOID CONTOUR

SERVICE CYCLE 2

P NEW 4000.0000

TL NEW -320.0000

TF NEW -320.0000

	25	26	27	28	29	30
SNL	0.17822709E 06	0.17823118E 06	0.17823546E 06	0.17823998E 06	0.17824472E 06	0.17824969E 06
SNLH	0.17265055E 06	0.17265299E 06	0.17265556E 06	0.17265829E 06	0.17266121E 06	0.17266429E 06
SNF	0.42994108E 06	0.42998923E 06	0.43003968E 06	0.43009243E 06	0.43014752E 06	0.43020503E 06
ENL	0.27616368E-01	0.27619973E-01	0.27623741E-01	0.27627702E-01	0.27631819E-01	0.27636129E-01
ENLH	0.17107814E-01	0.17108313E-01	0.17108846E-01	0.17109444E-01	0.17110137E-01	0.17110881E-01
ENF	0.31406671E-01	0.31410276E-01	0.31414055E-01	0.31418006E-01	0.31422132E-01	0.31426439E-01
DSYLN	0.25033367E 05	0.25024969E 05	0.25016166E 05	0.25006990E 05	0.24997418E 05	0.24987443E 05
DSYLHN	0.30911049E 05	0.30913492E 05	0.30916059E 05	0.30918793E 05	0.30921713E 05	0.30924791E 05

	31	32	33	34	35	36
SNL	0.17825489E 06	0.17826034E 06	0.17826606E 06	0.17827203E 06	0.17827829E 06	0.17828483E 06
SNLH	0.17266754E 06	0.17267101E 06	0.17267467E 06	0.17267854E 06	0.17268267E 06	0.17268703E 06
SNF	0.43026500E 06	0.43032747E 06	0.43039253E 06	0.43046021E 06	0.43053056E 06	0.43060367E 06
ENL	0.27640619E-01	0.27645295E-01	0.27650177E-01	0.27655242E-01	0.27660513E-01	0.27665988E-01
ENLH	0.17111704E-01	0.17112630E-01	0.17113635E-01	0.17114751E-01	0.17116005E-01	0.17117381E-01
ENF	0.31430931E-01	0.31435609E-01	0.31440482E-01	0.31445551E-01	0.31450820E-01	0.31456295E-01
DSYLN	0.24977055E 05	0.24966258E 05	0.24955039E 05	0.24943381E 05	0.24931305E 05	0.24918771E 05
DSYLHN	0.30928047E 05	0.30931510E 05	0.30935168E 05	0.30939039E 05	0.30943168E 05	0.30947535E 05

	37	38	39	40	41	42
SNL	0.17829167E 06	0.17829883E 06	0.17830632E 06	0.17831417E 06	0.17832240E 06	0.17833100E 06
SNLH	0.17269165E 06	0.17269657E 06	0.17270180E 06	0.17270737E 06	0.17271329E 06	0.17271959E 06
SNF	0.43067964E 06	0.43075851E 06	0.43084039E 06	0.43092533E 06	0.43101346E 06	0.43110494E 06
ENL	0.27671678E-01	0.27677589E-01	0.27683714E-01	0.27690084E-01	0.27696691E-01	0.27703536E-01
ENLH	0.17118891E-01	0.17120569E-01	0.17122431E-01	0.17124491E-01	0.17126771E-01	0.17129287E-01
ENF	0.31461985E-01	0.31467892E-01	0.31474025E-01	0.31480386E-01	0.31486987E-01	0.31493838E-01
DSYLN	0.24905783E 05	0.24892340E 05	0.24878424E 05	0.24864035E 05	0.24849160E 05	0.24833775E 05
DSYLHN	0.30952156E 05	0.30957074E 05	0.30962301E 05	0.30967867E 05	0.30973793E 05	0.30980096E 05

	43	44	45	46	47	48
SNL	0.17834001E 06	0.17834947E 06	0.17835941E 06	0.17836984E 06	0.17838082E 06	0.17839237E 06
SNLH	0.17272632E 06	0.17273351E 06	0.17274121E 06	0.17274947E 06	0.17275833E 06	0.17276786E 06
SNF	0.43119981E 06	0.43129820E 06	0.43140023E 06	0.43150604E 06	0.43161581E 06	0.43172967E 06
ENL	0.27710637E-01	0.27718002E-01	0.27725646E-01	0.27733573E-01	0.27741795E-01	0.27750328E-01
ENLH	0.17132075E-01	0.17135166E-01	0.17138602E-01	0.17142421E-01	0.17146651E-01	0.17151368E-01
ENF	0.31500943E-01	0.31508312E-01	0.31515954E-01	0.31523879E-01	0.31532100E-01	0.31540628E-01
DSYLN	0.24817887E 05	0.24801480E 05	0.24784555E 05	0.24767092E 05	0.24749072E 05	0.24730508E 05
DSYLHN	0.30986822E 05	0.30994012E 05	0.31001717E 05	0.31009975E 05	0.31018828E 05	0.31028361E 05

87

DESIGN DATA FOR GEODESIC ISOTENSOID CONTOUR

SERVICE CYCLE 2

P NEW 4000.0000

TL NEW -320.0000

TF NEW -320.0000

	49	50	51	52	53	54
SNL	0.17840455E 06	0.17841741E 06	0.17843102E 06	0.17844544E 06	0.17846076E 06	0.17847706E 06
SNLH	0.17277813E 06	0.17278923E 06	0.17280127E 06	0.17281435E 06	0.17282861E 06	0.17284420E 06
SNF	0.43184785E 06	0.43197049E 06	0.43209777E 06	0.43222995E 06	0.43236728E 06	0.43251003E 06
ENL	0.27759176E-01	0.27768353E-01	0.27777886E-01	0.27787796E-01	0.27798083E-01	0.27808768E-01
ENLH	0.17156620E-01	0.17162495E-01	0.17169067E-01	0.17176432E-01	0.17184726E-01	0.17194080E-01
ENF	0.31549479E-01	0.31558664E-01	0.31568197E-01	0.31578097E-01	0.31588382E-01	0.31599073E-01
DSYLN	0.24711369E 05	0.24691666E 05	0.24671391E 05	0.24650535E 05	0.24629107E 05	0.24607104E 05
DSYLHN	0.31038631E 05	0.31049736E 05	0.31061771E 05	0.31074848E 05	0.31089107E 05	0.31104705E 05

	55	56	57	58	59	60
SNL	0.17849448E 06	0.17851314E 06	0.17853319E 06	0.17855484E 06	0.17857832E 06	0.17860395E 06
SNLH	0.17286134E 06	0.17288023E 06	0.17290116E 06	0.17292450E 06	0.17295064E 06	0.17298012E 06
SNF	0.43265844E 06	0.43281286E 06	0.43297370E 06	0.43314125E 06	0.43331592E 06	0.43349820E 06
ENL	0.27819887E-01	0.27831458E-01	0.27843502E-01	0.27856037E-01	0.27869124E-01	0.27882787E-01
ENLH	0.17204664E-01	0.17216679E-01	0.17230374E-01	0.17246097E-01	0.17264184E-01	0.17285135E-01
ENF	0.31610188E-01	0.31621753E-01	0.31633799E-01	0.31646348E-01	0.31659431E-01	0.31673082E-01
DSYLN	0.24584549E 05	0.24561447E 05	0.24537844E 05	0.24513791E 05	0.24489355E 05	0.24464645E 05
DSYLHN	0.31121840E 05	0.31140732E 05	0.31161658E 05	0.31184998E 05	0.31211139E 05	0.31240625E 05

	61	62	63	64	65	66
SNL	0.17863207E 06	0.17866319E 06	0.17869792E 06	0.17873710E 06	0.17878190E 06	0.17883391E 06
SNLH	0.17301368E 06	0.17305219E 06	0.17309686E 06	0.17314925E 06	0.17321169E 06	0.17328731E 06
SNF	0.43368857E 06	0.43388751E 06	0.43409554E 06	0.43431324E 06	0.43454103E 06	0.43477920E 06
ENL	0.27897040E-01	0.27911943E-01	0.27927518E-01	0.27943828E-01	0.27960893E-01	0.27978732E-01
ENLH	0.17309624E-01	0.17338462E-01	0.17372759E-01	0.17413970E-01	0.17464263E-01	0.17526593E-01
ENF	0.31687340E-01	0.31702240E-01	0.31717820E-01	0.31734125E-01	0.31751186E-01	0.31769024E-01
DSYLN	0.24439818E 05	0.24415109E 05	0.24390828E 05	0.24367457E 05	0.24345738E 05	0.24326730E 05
DSYLHN	0.31274180E 05	0.31312695E 05	0.31357361E 05	0.31409754E 05	0.31472187E 05	0.31547809E 05

	67	68	69	70	71	72
SNL	0.17889554E 06	0.17897041E 06	0.17906453E 06	0.17918828E 06	0.17926691E 06	0.17936184E 06
SNLH	0.17338092E 06	0.17349991E 06	0.17365650E 06	0.17387229E 06	0.17401415E 06	0.17418945E 06
SNF	0.43502779E 06	0.43528595E 06	0.43555121E 06	0.43581727E 06	0.43594628E 06	0.43606826E 06
ENL	0.27997354E-01	0.28016675E-01	0.28036549E-01	0.28056473E-01	0.28066149E-01	0.28075293E-01
ENLH	0.17605487E-01	0.17707943E-01	0.17845544E-01	0.18038899E-01	0.18167726E-01	0.18328323E-01
ENF	0.31787641E-01	0.31806977E-01	0.31826844E-01	0.31846770E-01	0.31856432E-01	0.31865568E-01
DSYLN	0.24312213E 05	0.24304988E 05	0.24310012E 05	0.24336342E 05	0.24362604E 05	0.24402381E 05
DSYLHN	0.31641422E 05	0.31760416E 05	0.31917002E 05	0.32132789E 05	0.32274652E 05	0.32449953E 05

88

DESIGN DATA FOR GEODESIC ISOTENSOID CONTOUR

SERVICE CYCLE 2

P NEW	TL NEW	TF NEW
4000.0000	-320.0000	-320.0000

	73	74	75	76	77	78
SNL	0.17947952E 06	0.17963035E 06	0.17983254E 06	0.18012057E 06	0.17361511E 06	0.17406301E 06
SNLH	0.17441182E 06	0.17470332E 06	0.17510265E 06	0.17568334E 06	0.17302594E 06	0.17349682E 06
SNF	0.43617713E 06	0.43626246E 06	0.43630486E 06	0.43626625E 06	0.44402350E 06	0.44356804E 06
ENL	0.28083441E-01	0.28089826E-01	0.28093002E-01	0.28090097E-01	0.21586632E-01	0.21853540E-01
ENLH	0.18533770E-01	0.18805232E-01	0.19179898E-01	0.19728481E-01	0.20476382E-01	0.20786596E-01
ENF	0.31873722E-01	0.31880113E-01	0.31883289E-01	0.31880396E-01	0.32461379E-01	0.32427268E-01
DSYLN	0.24461809E 05	0.24550977E 05	0.24687682E 05	0.24906113E 05	0.23624191E 05	0.22901590E 05
DSYLHN	0.32672324E 05	0.32963824E 05	0.33363154E 05	0.33943842E 05	0.31286443E 05	0.29855646E 05

	79	80	81	82	83	84
SNL	0.18328884E 06	0.18573655E 06	0.43420379E 06	-0.11775924E 07	0.16059243E 06	0.15921452E 06
SNLH	0.18234027E 06	0.18755451E 06	0.56498768E 06	-0.27808601E 07	-0.40117623E 06	-0.12985761E 07
SNF	0.43357891E 06	0.43090511E 06	0.15558776E 06	0.20232337E 07	0.45950815E 06	0.54568637E 06
ENL	0.27888843E-01	0.27688575E-01	0.10275222E 00	-0.13644434E-01	0.29830825E-01	0.36285179E-01
ENLH	0.26101344E-01	0.31114390E-01	0.34920427E 00	-0.78695024E-01	-0.27724188E-01	-0.55084160E-01
ENF	0.31679128E-01	0.31478872E-01	0.10858862E-01	0.15073700E 00	0.33621109E-01	0.40075464E-01
DSYLN	0.18621348E 05	0.13142922E 05	0.11637106E 06	0.00000000E-38	0.78471895E 04	0.74170156E 04
DSYLHN	0.20796818E 05	0.91272891E 04	0.15297224E 06	0.00000000E-38	0.00000000E-38	0.00000000E-38

	85	86
SNL	0.54063337E 06	0.53807324E 06
SNLH	0.95084348E 06	0.94568388E 06
SNF	-0.17739054E 05	-0.17409216E 05
ENL	-0.59128336E-02	-0.58881433E-02
ENLH	0.76709095E 00	0.76221719E 00
ENF	-0.21225240E-02	-0.20978206E-02
DSYLN	0.13536764E 06	0.13451830E 06
DSYLHN	0.27143686E 06	0.26972516E 06

89

DESIGN DATA FOR GEODESIC ISOTENSOID CONTOUR

SERVICE CYCLE	P NEW	TL NEW	TF NEW
2	4000.0000	-320.0000	-320.0000

CYLINDER PROPERTIES

SNL	=	0.18348136E 06
SNLH	=	0.18497294E 06
SNF	=	0.41472905E 06
SNFH	=	0.43436494E 06
ENL	=	0.26477020E-01
ENLH	=	0.29287780E-01
ENF	=	0.30267359E-01
ENFH	=	0.33078068E-01
DSYLHN	=	0.19382396E 05
DSYLHN	=	0.17661652E 05

DESIGN DATA FOR GEODESIC ISOTENSOID CONTOUR

SERVICE CYCLE 2

P NEW	TL NEW	TF NEW
4445.0000	-320.0000	-320.0000

90

	1	2	3	4	5	6
SNL	0.19156089E 06	0.19156089E 06	0.19156088E 06	0.19156088E 06	0.19156087E 06	0.19156088E 06
SNLH	0.19156105E 06	0.19156106E 06	0.19156105E 06	0.19156105E 06	0.19156106E 06	0.19156106E 06
SNF	0.49499909E 06	0.49499905E 06	0.49499904E 06	0.49499898E 06	0.49499896E 06	0.49499893E 06
ENL	0.32488917E-01	0.32488909E-01	0.32488906E-01	0.32488906E-01	0.32488894E-01	0.32488901E-01
ENLH	0.32489223E-01	0.32489236E-01	0.32489228E-01	0.32489233E-01	0.32489248E-01	0.32489238E-01
ENF	0.36279218E-01	0.36279215E-01	0.36279214E-01	0.36279210E-01	0.36279208E-01	0.36279206E-01
DSYLN	0.13379104E 05	0.13379027E 05	0.13378803E 05	0.13378430E 05	0.13377900E 05	0.13377230E 05
DSYLHN	0.18936053E 05	0.18936018E 05	0.18935895E 05	0.18935699E 05	0.18935416E 05	0.18935055E 05

	7	8	9	10	11	12
SNL	0.19156087E 06	0.19156087E 06	0.19156086E 06	0.19156087E 06	0.19156087E 06	0.19156087E 06
SNLH	0.19156105E 06	0.19156105E 06	0.19156105E 06	0.19156105E 06	0.19156107E 06	0.19156106E 06
SNF	0.49499891E 06	0.49499887E 06	0.49499885E 06	0.49499882E 06	0.49499873E 06	0.49499870E 06
ENL	0.32488898E-01	0.32488904E-01	0.32488883E-01	0.32488891E-01	0.32488885E-01	0.32488889E-01
ENLH	0.32489234E-01	0.32489227E-01	0.32489244E-01	0.32489236E-01	0.32489256E-01	0.32489252E-01
ENF	0.36279204E-01	0.36279202E-01	0.36279200E-01	0.36279198E-01	0.36279191E-01	0.36279189E-01
DSYLN	0.13376404E 05	0.13375428E 05	0.13374291E 05	0.13373010E 05	0.13371566E 05	0.13369969E 05
DSYLHN	0.18934611E 05	0.18934082E 05	0.18933473E 05	0.18932777E 05	0.18931996E 05	0.18931123E 05

	13	14	15	16	17	18
SNL	0.19156087E 06	0.19156087E 06	0.19156086E 06	0.19156086E 06	0.19156086E 06	0.19156086E 06
SNLH	0.19156105E 06	0.19156108E 06	0.19156106E 06	0.19156107E 06	0.19156107E 06	0.19156106E 06
SNF	0.49499866E 06	0.49499861E 06	0.49499859E 06	0.49499852E 06	0.49499847E 06	0.49499844E 06
ENL	0.32488887E-01	0.32488872E-01	0.32488874E-01	0.32488873E-01	0.32488864E-01	0.32488869E-01
ENLH	0.32489240E-01	0.32489273E-01	0.32489259E-01	0.32489260E-01	0.32489271E-01	0.32489260E-01
ENF	0.36279186E-01	0.36279182E-01	0.36279181E-01	0.36279175E-01	0.36279172E-01	0.36279169E-01
DSYLN	0.13368209E 05	0.13366289E 05	0.13364207E 05	0.13361961E 05	0.13359539E 05	0.13356959E 05
DSYLHN	0.18930162E 05	0.18929111E 05	0.18927961E 05	0.18926717E 05	0.18925367E 05	0.18923920E 05

	19	20	21	22	23	24
SNL	0.19156086E 06	0.19156086E 06	0.19156085E 06	0.19156086E 06	0.19156086E 06	0.19156086E 06
SNLH	0.19156108E 06	0.19156108E 06	0.19156108E 06	0.19156108E 06	0.19156108E 06	0.19156109E 06
SNF	0.49499837E 06	0.49499833E 06	0.49499831E 06	0.49499825E 06	0.49499821E 06	0.49499814E 06
ENL	0.32488859E-01	0.32488856E-01	0.32488855E-01	0.32488859E-01	0.32488861E-01	0.32488852E-01
ENLH	0.32489283E-01	0.32489286E-01	0.32489280E-01	0.32489281E-01	0.32489283E-01	0.32489294E-01
ENF	0.36279164E-01	0.36279161E-01	0.36279160E-01	0.36279155E-01	0.36279152E-01	0.36279147E-01
DSYLN	0.13354197E 05	0.13351256E 05	0.13348135E 05	0.13344838E 05	0.13341342E 05	0.13337652E 05
DSYLHN	0.18922365E 05	0.18920697E 05	0.18918914E 05	0.18917018E 05	0.18914990E 05	0.18912836E 05

DESIGN DATA FOR GEODESIC ISOTENSOID CONTOUR

SERVICE CYCLE 2

P NEW	TL NEW	TF NEW
4445.0000	-320.0000	-320.0000

91

	25	26	27	28	29	30
SNL	0.19156085E 06	0.19156085E 06	0.19156084E 06	0.19156084E 06	0.19156084E 06	0.19156084E 06
SNLH	0.19156109E 06	0.19156110E 06	0.19156109E 06	0.19156109E 06	0.19156111E 06	0.19156111E 06
SNF	0.49499811E 06	0.49499805E 06	0.49499803E 06	0.49499797E 06	0.49499791E 06	0.49499786E 06
ENL	0.32488849E-01	0.32488839E-01	0.32488830E-01	0.32488836E-01	0.32488816E-01	0.32488815E-01
ENLH	0.32489296E-01	0.32489313E-01	0.32489309E-01	0.32489301E-01	0.32489334E-01	0.32489333E-01
ENF	0.36279145E-01	0.36279140E-01	0.36279138E-01	0.36279134E-01	0.36279130E-01	0.36279126E-01
DSYLN	0.13333768E 05	0.13329674E 05	0.13325379E 05	0.13320861E 05	0.13316121E 05	0.13311150E 05
DSYLHN	0.18910545E 05	0.18908113E 05	0.18905537E 05	0.18902797E 05	0.18899900E 05	0.18896824E 05

	31	32	33	34	35	36
SNL	0.19156084E 06	0.19156083E 06	0.19156085E 06	0.19156083E 06	0.19156085E 06	0.19156084E 06
SNLH	0.19156112E 06	0.19156112E 06	0.19156113E 06	0.19156112E 06	0.19156114E 06	0.19156115E 06
SNF	0.49499782E 06	0.49499776E 06	0.49499770E 06	0.49499767E 06	0.49499758E 06	0.49499752E 06
ENL	0.32488813E-01	0.32488801E-01	0.32488818E-01	0.32488806E-01	0.32488809E-01	0.32488799E-01
ENLH	0.32489337E-01	0.32489352E-01	0.32489347E-01	0.32489345E-01	0.32489363E-01	0.32489378E-01
ENF	0.36279123E-01	0.36279119E-01	0.36279114E-01	0.36279112E-01	0.36279105E-01	0.36279100E-01
DSYLN	0.13305945E 05	0.13300488E 05	0.13294789E 05	0.13288809E 05	0.13282559E 05	0.13276016E 05
DSYLHN	0.18893570E 05	0.18890117E 05	0.18886463E 05	0.18882584E 05	0.18878475E 05	0.18874119E 05

	37	38	39	40	41	42
SNL	0.19156084E 06	0.19156084E 06	0.19156083E 06	0.19156084E 06	0.19156085E 06	0.19156085E 06
SNLH	0.19156115E 06	0.19156115E 06	0.19156116E 06	0.19156118E 06	0.19156119E 06	0.19156120E 06
SNF	0.49499746E 06	0.49499739E 06	0.49499732E 06	0.49499723E 06	0.49499713E 06	0.49499709E 06
ENL	0.32488798E-01	0.32488796E-01	0.32488781E-01	0.32488784E-01	0.32488787E-01	0.32488771E-01
ENLH	0.32489374E-01	0.32489379E-01	0.32489395E-01	0.32489409E-01	0.32489423E-01	0.32489435E-01
ENF	0.36279096E-01	0.36279091E-01	0.36279086E-01	0.36279079E-01	0.36279071E-01	0.36279068E-01
DSYLN	0.13269172E 05	0.13262008E 05	0.13254514E 05	0.13246670E 05	0.13238457E 05	0.13229850E 05
DSYLHN	0.18869492E 05	0.18864578E 05	0.18859361E 05	0.18853811E 05	0.18847900E 05	0.18841604E 05

	43	44	45	46	47	48
SNL	0.19156084E 06	0.19156084E 06	0.19156084E 06	0.19156085E 06	0.19156086E 06	0.19156086E 06
SNLH	0.19156120E 06	0.19156121E 06	0.19156123E 06	0.19156125E 06	0.19156126E 06	0.19156128E 06
SNF	0.49499703E 06	0.49499697E 06	0.49499689E 06	0.49499680E 06	0.49499672E 06	0.49499664E 06
ENL	0.32488765E-01	0.32488754E-01	0.32488750E-01	0.32488745E-01	0.32488744E-01	0.32488737E-01
ENLH	0.32489441E-01	0.32489454E-01	0.32489476E-01	0.32489497E-01	0.32489508E-01	0.32489533E-01
ENF	0.36279064E-01	0.36279059E-01	0.36279053E-01	0.36279046E-01	0.36279041E-01	0.36279034E-01
DSYLN	0.13220830E 05	0.13211369E 05	0.13201437E 05	0.13191008E 05	0.13180039E 05	0.13168486E 05
DSYLHN	0.18834881E 05	0.18827699E 05	0.18820014E 05	0.18811777E 05	0.18802934E 05	0.18793424E 05

DESIGN DATA FOR GEODESIC ISOTENSOID CONTOUR

SERVICE CYCLE 2

P NEW	TL NEW	TF NEW
4445.0000	-320.0000	-320.0000

92

	49	50	51	52	53	54
SNL	0.19156086E 06	0.19156086E 06	0.19156086E 06	0.19156088E 06	0.19156089E 06	0.19156089E 06
SNLH	0.19156129E 06	0.19156131E 06	0.19156133E 06	0.19156135E 06	0.19156138E 06	0.19156141E 06
SNF	0.49499659E 06	0.49499651E 06	0.49499642E 06	0.49499630E 06	0.49499618E 06	0.49499608E 06
ENL	0.32488728E-01	0.32488722E-01	0.32488710E-01	0.32488714E-01	0.32488709E-01	0.32488698E-01
ENLH	0.32489542E-01	0.32489566E-01	0.32489592E-01	0.32489611E-01	0.32489642E-01	0.32489671E-01
ENF	0.36279031E-01	0.36279025E-01	0.36279018E-01	0.36279009E-01	0.36279000E-01	0.36278992E-01
DSYLN	0.13156303E 05	0.13143451E 05	0.13129846E 05	0.13115434E 05	0.13100127E 05	0.13083828E 05
DSYLHN	0.18783160E 05	0.18772074E 05	0.18760061E 05	0.18747008E 05	0.18732777E 05	0.18717207E 05

	55	56	57	58	59	60
SNL	0.19156091E 06	0.19156092E 06	0.19156092E 06	0.19156094E 06	0.19156095E 06	0.19156098E 06
SNLH	0.19156145E 06	0.19156149E 06	0.19156152E 06	0.19156158E 06	0.19156162E 06	0.19156166E 06
SNF	0.49499594E 06	0.49499579E 06	0.49499570E 06	0.49499555E 06	0.49499539E 06	0.49499521E 06
ENL	0.32488689E-01	0.32488679E-01	0.32488671E-01	0.32488649E-01	0.32488638E-01	0.32488644E-01
ENLH	0.32489715E-01	0.32489755E-01	0.32489786E-01	0.32489855E-01	0.32489902E-01	0.32489938E-01
ENF	0.36278982E-01	0.36278971E-01	0.36278964E-01	0.36278953E-01	0.36278941E-01	0.36278928E-01
DSYLN	0.13066422E 05	0.13047775E 05	0.13027732E 05	0.13006098E 05	0.12982627E 05	0.12957031E 05
DSYLHN	0.18700111E 05	0.18681256E 05	0.18660359E 05	0.18637082E 05	0.18610986E 05	0.18581541E 05

	61	62	63	64	65	66
SNL	0.19156100E 06	0.19156103E 06	0.19156107E 06	0.19156111E 06	0.19156117E 06	0.19156124E 06
SNLH	0.19156173E 06	0.19156182E 06	0.19156192E 06	0.19156202E 06	0.19156218E 06	0.19156235E 06
SNF	0.49499507E 06	0.49499487E 06	0.49499464E 06	0.49499443E 06	0.49499417E 06	0.49499384E 06
ENL	0.32488623E-01	0.32488618E-01	0.32488592E-01	0.32488587E-01	0.32488565E-01	0.32488544E-01
ENLH	0.32490015E-01	0.32490095E-01	0.32490210E-01	0.32490300E-01	0.32490463E-01	0.32490638E-01
ENF	0.36278917E-01	0.36278902E-01	0.36278885E-01	0.36278869E-01	0.36278849E-01	0.36278824E-01
DSYLN	0.12928930E 05	0.12897844E 05	0.12863146E 05	0.12824012E 05	0.12779273E 05	0.12727332E 05
DSYLHN	0.18548057E 05	0.18509623E 05	0.18465064E 05	0.18412766E 05	0.18350492E 05	0.18275047E 05

	67	68	69	70	71	72
SNL	0.19156134E 06	0.19156145E 06	0.19156163E 06	0.19156191E 06	0.19156209E 06	0.19156231E 06
SNLH	0.19156259E 06	0.19156289E 06	0.19156329E 06	0.19156391E 06	0.19156432E 06	0.19156481E 06
SNF	0.49499347E 06	0.49499309E 06	0.49499260E 06	0.49499196E 06	0.49499145E 06	0.49499086E 06
ENL	0.32488521E-01	0.32488469E-01	0.32488440E-01	0.32488402E-01	0.32488374E-01	0.32488339E-01
ENLH	0.32490869E-01	0.32491177E-01	0.32491576E-01	0.32492174E-01	0.32492573E-01	0.32493058E-01
ENF	0.36278797E-01	0.36278768E-01	0.36278732E-01	0.36278684E-01	0.36278646E-01	0.36278601E-01
DSYLN	0.12665801E 05	0.12591035E 05	0.12497102E 05	0.12373625E 05	0.12295176E 05	0.12200465E 05
DSYLHN	0.18181666E 05	0.18062973E 05	0.17906795E 05	0.17691621E 05	0.17550168E 05	0.17375361E 05

DESIGN DATA FOR GEODESIC ISOTENSOID CONTOUR

93

SERVICE CYCLE 2

P NEW	TL NEW	TF NEW
4445.0000	-320.0000	-320.0000

	73	74	75	76	77	78
SNL	0.19156260E 06	0.19156298E 06	0.19156358E 06	0.19156443E 06	0.18461152E 06	0.18425421E 06
SNLH	0.19156550E 06	0.19156638E 06	0.19156774E 06	0.19156969E 06	0.18799325E 06	0.18678257E 06
SNF	0.49499011E 06	0.49498920E 06	0.49498784E 06	0.49498596E 06	0.50294544E 06	0.50308699E 06
ENL	0.32488270E-01	0.32488196E-01	0.32488093E-01	0.32487945E-01	0.25999629E-01	0.26311230E-01
ENLH	0.32493740E-01	0.32494605E-01	0.32495944E-01	0.32497847E-01	0.32372249E-01	0.31075734E-01
ENF	0.36278545E-01	0.36278477E-01	0.36278375E-01	0.36278235E-01	0.36874363E-01	0.36884964E-01
DSYLN	0.12083082E 05	0.11932629E 05	0.11731039E 05	0.11443863E 05	0.10996402E 05	0.10191199E 05
DSYLHN	0.17153678E 05	0.16863057E 05	0.16465092E 05	0.15886348E 05	0.14967311E 05	0.13285754E 05

	79	80	81	82	83	84
SNL	0.19157535E 06	0.19158517E 06	0.48598891E 06	-0.11252656E 07	0.16408444E 06	0.16251510E 06
SNLH	0.19159487E 06	0.19161619E 06	0.63306032E 06	-0.26891567E 07	-0.48120955E 06	-0.15129103E 07
SNF	0.49495765E 06	0.49494369E 06	0.16904474E 06	0.20340403E 07	0.52782911E 06	0.62715238E 06
ENL	0.32485840E-01	0.32484788E-01	0.12504970E 00	-0.12835073E-01	0.34947777E-01	0.42386623E-01
ENLH	0.32522625E-01	0.32543238E-01	0.40219432E 00	-0.76288006E-01	-0.32434914E-01	-0.63898738E-01
ENF	0.36276115E-01	0.36275069E-01	0.11866728E-01	0.15154636E 00	0.38738036E-01	0.46176895E-01
DSYLN	0.82865078E 04	0.58486211E 04	0.51785117E 05	0.00000000E-38	0.34920117E 04	0.33005742E 04
DSYLHN	0.92545937E 04	0.40616758E 04	0.68072641E 05	0.00000000E-38	0.00000000E-38	0.00000000E-38

	85	86
SNL	0.60087198E 06	0.59793390E 06
SNLH	0.10716329E 07	0.10657116E 07
SNF	-0.20357503E 05	-0.19978975E 05
ENL	-0.61089440E-02	-0.60805918E-02
ENLH	0.88099813E 00	0.87540484E 00
ENF	-0.23186339E-02	-0.22902838E-02
DSYLN	0.60238609E 05	0.59860656E 05
DSYLHN	0.12078943E 06	0.12002770E 06

DESIGN DATA FOR GEODESIC ISOTENSOID CONTOUR

SERVICE CYCLE	P NEW	TL NEW	TF NEW
2	4445.0000	-320.0000	-320.0000

94

CYLINDER PROPERTIES

SNL	=	0.19210653E 06
SNLH	=	0.19283238E 06
SNF	=	0.49348962E 06
SNFH	=	0.49385907E 06
ENL	=	0.32375824E-01
ENLH	=	0.33743633E-01
ENF	=	0.36166165E-01
ENFH	=	0.37533906E-01
DSYLHN	=	0.86251719E 04
DSYLHN	=	0.78594453E 04

A-30

SAMPLE CASE NO. INCONEL METAL-SHELL

DESIGN DATA FOR GEODESIC ISOTENSOID CONTOUR

SERVICE CYCLE 2

P NEW	TL NEW	TF NEW
0.0000	-320.0000	-320.0000

95

	1	2	3	4	5	6
SNL	-0.13759207E 06	-0.13760048E 06	-0.13762575E 06	-0.13766789E 06	-0.13772699E 06	-0.13780311E 06
SNLH	-0.57328093E 04	-0.57340338E 04	-0.57377105E 04	-0.57438469E 04	-0.57524589E 04	-0.57635652E 04
SNF	0.38079815E 06	0.38079473E 06	0.38078455E 06	0.38076754E 06	0.38074376E 06	0.38071311E 06
ENL	0.23935787E-01	0.23935527E-01	0.23934761E-01	0.23933492E-01	0.23931701E-01	0.23929414E-01
ENLH	0.29286112E-01	0.29286164E-01	0.29286271E-01	0.29286467E-01	0.29286748E-01	0.29287085E-01
ENF	0.27726090E-01	0.27725834E-01	0.27725071E-01	0.27723798E-01	0.27722016E-01	0.27719721E-01
DSYLN	0.00000000E-38	0.00000000E-38	0.00000000E-38	0.00000000E-38	0.00000000E-38	0.00000000E-38
DSYLHN	0.00000000E-38	0.00000000E-38	0.00000000E-38	0.00000000E-38	0.00000000E-38	0.00000000E-38

	7	8	9	10	11	12
SNL	-0.13789634E 06	-0.13800682E 06	-0.13813470E 06	-0.13828012E 06	-0.13844330E 06	-0.13862448E 06
SNLH	-0.57771927E 04	-0.57933726E 04	-0.58121445E 04	-0.58335519E 04	-0.58576463E 04	-0.58844880E 04
SNF	0.38067559E 06	0.38063113E 06	0.38057970E 06	0.38052120E 06	0.38045551E 06	0.38038268E 06
ENL	0.23926602E-01	0.23923282E-01	0.23919412E-01	0.23915040E-01	0.23910122E-01	0.23904670E-01
ENLH	0.29287503E-01	0.29287995E-01	0.29288587E-01	0.29289233E-01	0.29289983E-01	0.29290787E-01
ENF	0.27716911E-01	0.27713581E-01	0.27709729E-01	0.27705348E-01	0.27700428E-01	0.27694973E-01
DSYLN	0.00000000E-38	0.00000000E-38	0.00000000E-38	0.00000000E-38	0.00000000E-38	0.00000000E-38
DSYLHN	0.00000000E-38	0.00000000E-38	0.00000000E-38	0.00000000E-38	0.00000000E-38	0.00000000E-38

	13	14	15	16	17	18
SNL	-0.13882389E 06	-0.13904180E 06	-0.13927854E 06	-0.13953441E 06	-0.13980980E 06	-0.14010512E 06
SNLH	-0.59141418E 04	-0.59466818E 04	-0.59821906E 04	-0.60207581E 04	-0.60624857E 04	-0.61074838E 04
SNF	0.38030250E 06	0.38021491E 06	0.38011979E 06	0.38001697E 06	0.37990635E 06	0.37978777E 06
ENL	0.23898669E-01	0.23892096E-01	0.23884976E-01	0.23877281E-01	0.23868991E-01	0.23860116E-01
ENLH	0.29291662E-01	0.29292658E-01	0.29293687E-01	0.29294809E-01	0.29296018E-01	0.29297286E-01
ENF	0.27688968E-01	0.27682408E-01	0.27675284E-01	0.27667583E-01	0.27659298E-01	0.27650417E-01
DSYLN	0.00000000E-38	0.00000000E-38	0.00000000E-38	0.00000000E-38	0.00000000E-38	0.00000000E-38
DSYLHN	0.00000000E-38	0.00000000E-38	0.00000000E-38	0.00000000E-38	0.00000000E-38	0.00000000E-38

	19	20	21	22	23	24
SNL	-0.14042079E 06	-0.14075729E 06	-0.14111514E 06	-0.14149487E 06	-0.14189710E 06	-0.14232246E 06
SNLH	-0.61558726E 04	-0.62077855E 04	-0.62633685E 04	-0.63227797E 04	-0.63861938E 04	-0.64538006E 04
SNF	0.37966105E 06	0.37952600E 06	0.37938248E 06	0.37923019E 06	0.37906895E 06	0.37889848E 06
ENL	0.23850619E-01	0.23840505E-01	0.23829757E-01	0.23818361E-01	0.23806288E-01	0.23793516E-01
ENLH	0.29298665E-01	0.29300106E-01	0.29301614E-01	0.29303210E-01	0.29304889E-01	0.29306654E-01
ENF	0.27640926E-01	0.27630812E-01	0.27620062E-01	0.27608657E-01	0.27596580E-01	0.27583813E-01
DSYLN	0.00000000E-38	0.00000000E-38	0.00000000E-38	0.00000000E-38	0.00000000E-38	0.00000000E-38
DSYLHN	0.00000000E-38	0.00000000E-38	0.00000000E-38	0.00000000E-38	0.00000000E-38	0.00000000E-38

96

DESIGN DATA FOR GEODESIC ISOTENSOID CONTOUR

SERVICE CYCLE 2

P NEW	TL NEW	TF NEW
0.0000	-320.0000	-320.0000

	25	26	27	28	29	30
SNL	-0.14277166E 06	-0.14324545E 06	-0.14374465E 06	-0.14427011E 06	-0.14482279E 06	-0.14540370E 06
SNLH	-0.65258080E 04	-0.66024431E 04	-0.66839554E 04	-0.67706154E 04	-0.68627222E 04	-0.69606027E 04
SNF	0.37871857E 06	0.37852888E 06	0.37832915E 06	0.37811897E 06	0.37789804E 06	0.37766595E 06
ENL	0.23780042E-01	0.23765830E-01	0.23750864E-01	0.23735133E-01	0.23718571E-01	0.23701191E-01
ENLH	0.29308487E-01	0.29310414E-01	0.29312399E-01	0.29314458E-01	0.29316633E-01	0.29318856E-01
ENF	0.27570339E-01	0.27556132E-01	0.27541173E-01	0.27525432E-01	0.27508885E-01	0.27491503E-01
DSYLN	0.00000000E-38	0.00000000E-38	0.00000000E-38	0.00000000E-38	0.00000000E-38	0.00000000E-38
DSYLHN	0.00000000E-38	0.00000000E-38	0.00000000E-38	0.00000000E-38	0.00000000E-38	0.00000000E-38

	31	32	33	34	35	36
SNL	-0.14601395E 06	-0.14665471E 06	-0.14732726E 06	-0.14803300E 06	-0.14877341E 06	-0.14955014E 06
SNLH	-0.70646158E 04	-0.71751560E 04	-0.72926580E 04	-0.74176019E 04	-0.75505159E 04	-0.76919880E 04
SNF	0.37742232E 06	0.37716663E 06	0.37689843E 06	0.37661724E 06	0.37632240E 06	0.37601338E 06
ENL	0.23682943E-01	0.23663787E-01	0.23643722E-01	0.23622652E-01	0.23600579E-01	0.23577430E-01
ENLH	0.29321154E-01	0.29323536E-01	0.29325970E-01	0.29328476E-01	0.29331066E-01	0.29333716E-01
ENF	0.27473255E-01	0.27454105E-01	0.27434019E-01	0.27412959E-01	0.27390877E-01	0.27367733E-01
DSYLN	0.00000000E-38	0.00000000E-38	0.00000000E-38	0.00000000E-38	0.00000000E-38	0.00000000E-38
DSYLHN	0.00000000E-38	0.00000000E-38	0.00000000E-38	0.00000000E-38	0.00000000E-38	0.00000000E-38

	37	38	39	40	41	42
SNL	-0.15036495E 06	-0.15121975E 06	-0.15211664E 06	-0.15305788E 06	-0.15404597E 06	-0.15508367E 06
SNLH	-0.78426675E 04	-0.80032780E 04	-0.81746264E 04	-0.83576116E 04	-0.85532445E 04	-0.87626605E 04
SNF	0.37568949E 06	0.37535001E 06	0.37499417E 06	0.37462107E 06	0.37422984E 06	0.37381953E 06
ENL	0.23553175E-01	0.23527752E-01	0.23501092E-01	0.23473159E-01	0.23443867E-01	0.23413126E-01
ENLH	0.29336404E-01	0.29339154E-01	0.29341961E-01	0.29344804E-01	0.29347677E-01	0.29350567E-01
ENF	0.27343475E-01	0.27318049E-01	0.27291398E-01	0.27263455E-01	0.27234154E-01	0.27203423E-01
DSYLN	0.00000000E-38	0.00000000E-38	0.00000000E-38	0.00000000E-38	0.00000000E-38	0.00000000E-38
DSYLHN	0.00000000E-38	0.00000000E-38	0.00000000E-38	0.00000000E-38	0.00000000E-38	0.00000000E-38

	43	44	45	46	47	48
SNL	-0.15617393E 06	-0.15732004E 06	-0.15852562E 06	-0.15979469E 06	-0.16113167E 06	-0.16254150E 06
SNLH	-0.89871382E 04	-0.92281245E 04	-0.94872620E 04	-0.97664253E 04	-0.10067758E 05	-0.10393724E 05
SNF	0.37338896E 06	0.37293693E 06	0.37246212E 06	0.37196308E 06	0.37143823E 06	0.37088579E 06
ENL	0.23380875E-01	0.23347015E-01	0.23311456E-01	0.23274083E-01	0.23234779E-01	0.23193402E-01
ENLH	0.29353459E-01	0.29356345E-01	0.29359211E-01	0.29362028E-01	0.29364754E-01	0.29367386E-01
ENF	0.27171175E-01	0.27137321E-01	0.27101759E-01	0.27064384E-01	0.27025075E-01	0.26983699E-01
DSYLN	0.00000000E-38	0.00000000E-38	0.00000000E-38	0.00000000E-38	0.00000000E-38	0.00000000E-38
DSYLHN	0.00000000E-38	0.00000000E-38	0.00000000E-38	0.00000000E-38	0.00000000E-38	0.00000000E-38

DESIGN DATA FOR GEODESIC ISOTENSOID CONTOUR

SERVICE CYCLE 2

P NEW	TL NEW	TF NEW
0.0000	-320.0000	-320.0000

92

	49	50	51	52	53	54
SNL	-0.16402968E 06	-0.16560235E 06	-0.16726640E 06	-0.16902964E 06	-0.17090089E 06	-0.17289020E 06
SNLH	-0.10747174E 05	-0.11131411E 05	-0.11550298E 05	-0.12008367E 05	-0.12510983E 05	-0.13064527E 05
SNF	0.37030382E 06	0.36969010E 06	0.36904220E 06	0.36835737E 06	0.36763264E 06	0.36686453E 06
ENL	0.23149808E-01	0.23103844E-01	0.23055315E-01	0.23004037E-01	0.22949762E-01	0.22892230E-01
ENLH	0.29369855E-01	0.29372134E-01	0.29374163E-01	0.29375858E-01	0.29377146E-01	0.29377912E-01
ENF	0.26940113E-01	0.26894148E-01	0.26845623E-01	0.26794333E-01	0.26740053E-01	0.26682526E-01
DSYLN	0.00000000E-38	0.00000000E-38	0.00000000E-38	0.00000000E-38	0.00000000E-38	0.00000000E-38
DSYLHN	0.00000000E-38	0.00000000E-38	0.00000000E-38	0.00000000E-38	0.00000000E-38	0.00000000E-38

	55	56	57	58	59	60
SNL	-0.17500905E 06	-0.17727066E 06	-0.17969035E 06	-0.18228590E 06	-0.18507826E 06	-0.18809219E 06
SNLH	-0.13676661E 05	-0.14356650E 05	-0.15115815E 05	-0.15968116E 05	-0.16930975E 05	-0.18026404E 05
SNF	0.36604913E 06	0.36518203E 06	0.36425823E 06	0.36327189E 06	0.36221632E 06	0.36108384E 06
ENL	0.22831162E-01	0.22766221E-01	0.22697031E-01	0.22623147E-01	0.22544092E-01	0.22459293E-01
ENLH	0.29378025E-01	0.29377306E-01	0.29375530E-01	0.29372465E-01	0.29367697E-01	0.29360768E-01
ENF	0.26621456E-01	0.26556514E-01	0.26487326E-01	0.26413453E-01	0.26334396E-01	0.26249578E-01
DSYLN	0.00000000E-38	0.00000000E-38	0.00000000E-38	0.00000000E-38	0.00000000E-38	0.00000000E-38
DSYLHN	0.00000000E-38	0.00000000E-38	0.00000000E-38	0.00000000E-38	0.00000000E-38	0.00000000E-38

	61	62	63	64	65	66
SNL	-0.19135729E 06	-0.19490919E 06	-0.19879141E 06	-0.20305773E 06	-0.20777545E 06	-0.21303034E 06
SNLH	-0.19282615E 05	-0.20736336E 05	-0.22436275E 05	-0.24448377E 05	-0.26864107E 05	-0.29814009E 05
SNF	0.35986550E 06	0.35855071E 06	0.35712716E 06	0.35558034E 06	0.35389305E 06	0.35204517E 06
ENL	0.22368036E-01	0.22269572E-01	0.22162949E-01	0.22047109E-01	0.21920737E-01	0.21782341E-01
ENLH	0.29351113E-01	0.29337867E-01	0.29319920E-01	0.29295636E-01	0.29262844E-01	0.29218165E-01
ENF	0.26158330E-01	0.26059859E-01	0.25953241E-01	0.25837391E-01	0.25711021E-01	0.25572623E-01
DSYLN	0.00000000E-38	0.00000000E-38	0.00000000E-38	0.00000000E-38	0.00000000E-38	0.00000000E-38
DSYLHN	0.00000000E-38	0.00000000E-38	0.00000000E-38	0.00000000E-38	0.00000000E-38	0.00000000E-38

	67	68	69	70	71	72
SNL	-0.21893365E 06	-0.22563281E 06	-0.23332792E 06	-0.24229824E 06	-0.24738061E 06	-0.25294520E 06
SNLH	-0.33490791E 05	-0.38190886E 05	-0.44394026E 05	-0.52928465E 05	-0.58508533E 05	-0.65351225E 05
SNF	0.35001346E 06	0.34777214E 06	0.34529550E 06	0.34256709E 06	0.34111178E 06	0.33960764E 06
ENL	0.21630180E-01	0.21462293E-01	0.21276810E-01	0.21072475E-01	0.20963490E-01	0.20850846E-01
ENLH	0.29156591E-01	0.29070166E-01	0.28945639E-01	0.28759610E-01	0.28630849E-01	0.28466854E-01
ENF	0.25420458E-01	0.25252593E-01	0.25067104E-01	0.24862759E-01	0.24753762E-01	0.24641109E-01
DSYLN	0.00000000E-38	0.00000000E-38	0.00000000E-38	0.00000000E-38	0.00000000E-38	0.00000000E-38
DSYLHN	0.00000000E-38	0.00000000E-38	0.00000000E-38	0.00000000E-38	0.00000000E-38	0.00000000E-38

DESIGN DATA FOR GEODESIC ISOTENSOID CONTOUR

SERVICE CYCLE 2

P NEW	TL NEW	TF NEW
0.0000	-320.0000	-320.0000

	73	74	75	76	77	78
SNL	-0.25907254E 06	-0.26586111E 06	-0.27342989E 06	-0.28191832E 06	-0.29842687E 06	-0.30950314E 06
SNLH	-0.73924220E 05	-0.84952995E 05	-0.99622990E 05	-0.12000366E 06	-0.15361485E 06	-0.20296903E 06
SNF	0.33807772E 06	0.33656904E 06	0.33517568E 06	0.33409101E 06	0.34169541E 06	0.34319871E 06
ENL	0.20736250E-01	0.20623249E-01	0.20518891E-01	0.20437650E-01	0.13922739E-01	0.14336329E-01
ENLH	0.28253764E-01	0.27969643E-01	0.27578572E-01	0.27016823E-01	0.26033715E-01	0.23320736E-01
ENF	0.24526525E-01	0.24413532E-01	0.24309175E-01	0.24227939E-01	0.24797473E-01	0.24910064E-01
DSYLN	0.00000000E-38	0.00000000E-38	0.00000000E-38	0.00000000E-38	0.00000000E-38	0.00000000E-38
DSYLHN	0.00000000E-38	0.00000000E-38	0.00000000E-38	0.00000000E-38	0.00000000E-38	0.00000000E-38

	79	80	81	82	83	84
SNL	-0.31391218E 06	-0.31990417E 06	0.50388646E 06	-0.16479456E 07	-0.30404015E 06	-0.29502505E 06
SNLH	-0.28606936E 06	-0.36285875E 06	0.75551745E 06	-0.36051608E 07	-0.74884166E 06	-0.14302425E 07
SNF	0.34084981E 06	0.34766986E 06	-0.55778121E 06	0.19260962E 07	0.36383291E 06	0.42493943E 06
ENL	0.20943868E-01	0.21454649E-01	0.70613748E-01	-0.20919591E-01	0.22665209E-01	0.27241795E-01
ENLH	0.22109546E-01	0.19769015E-01	0.54479274E 00	-0.10033116E 00	-0.36582744E-01	-0.57125295E-01
ENF	0.24734142E-01	0.25244932E-01	-0.42569212E-01	0.14346184E 00	0.26455471E-01	0.31032070E-01
DSYLN	0.00000000E-38	0.00000000E-38	0.17897547E 05	0.00000000E-38	0.00000000E-38	0.00000000E-38
DSYLHN	0.00000000E-38	0.00000000E-38	0.12245712E 06	0.00000000E-38	0.00000000E-38	0.00000000E-38

	85	86
SNL	-0.11579143E 05	-0.11902789E-02
SNLH	-0.18658333E 07	-0.17868143E 07
SNF	0.80185045E 05	0.76315564E 05
ENL	0.14212297E-02	0.11314272E-02
ENLH	0.79419370E 00	0.79113958E 00
ENF	0.52115431E-02	0.49217367E-02
DSYLN	0.00000000E-38	0.00000000E-38
DSYLHN	0.00000000E-38	0.00000000E-38

28.

99

DESIGN DATA FOR GEODESIC ISOTENSOID CONTOUR

SERVICE CYCLE 2

P NEW	TL NEW	TF NEW
0.0000	-320.0000	-320.0000

CYLINDER PROPERTIES

SNL	=	-0.15006287E 06
SNLH	=	-0.34514341E 06
SNF	=	0.41531275E 06
SNFH	=	0.30960629E 06
ENL	=	0.26520735E-01
ENLH	=	0.19943941E-01
ENF	=	0.30311076E-01
ENFH	=	0.23734216E-01
DSYLHN	=	0.00000000E-38
DSYLHN	=	0.00000000E-38

DESIGN DATA FOR GEODESIC ISOTENSOID CONTOUR

SERVICE CYCLE 2

P NEW	TL NEW	TF NEW
0.0000	75.0000	75.0000

100

	1	2	3	4	5	6
SNL	-0.13319357E 06	-0.13320176E 06	-0.13322637E 06	-0.13326742E 06	-0.13332497E 06	-0.13339910E 06
SNLH	-0.55495447E 04	-0.55507321E 04	-0.55542975E 04	-0.55602481E 04	-0.55685991E 04	-0.55793693E 04
SNF	0.36862492E 06	0.36862175E 06	0.36861230E 06	0.36859652E 06	0.36857445E 06	0.36854602E 06
ENL	0.25937513E-01	0.25937253E-01	0.25936488E-01	0.25935221E-01	0.25933430E-01	0.25931146E-01
ENLH	0.31249451E-01	0.31249503E-01	0.31249610E-01	0.31249807E-01	0.31250089E-01	0.31250427E-01
ENF	0.29727816E-01	0.29727560E-01	0.29726798E-01	0.29725526E-01	0.29723746E-01	0.29721453E-01
DSYLN	0.00000000E-38	0.00000000E-38	0.00000000E-38	0.00000000E-38	0.00000000E-38	0.00000000E-38
DSYLHN	0.00000000E-38	0.00000000E-38	0.00000000E-38	0.00000000E-38	0.00000000E-38	0.00000000E-38

	7	8	9	10	11	12
SNL	-0.13348990E 06	-0.13359750E 06	-0.13372204E 06	-0.13386368E 06	-0.13402260E 06	-0.13419906E 06
SNLH	-0.55925840E 04	-0.56082741E 04	-0.56264779E 04	-0.56472375E 04	-0.56706031E 04	-0.56966330E 04
SNF	0.36851120E 06	0.36846996E 06	0.36842223E 06	0.36836796E 06	0.36830700E 06	0.36823943E 06
ENL	0.25928337E-01	0.25925020E-01	0.25921154E-01	0.25916786E-01	0.25911872E-01	0.25906425E-01
ENLH	0.31250846E-01	0.31251340E-01	0.31251934E-01	0.31252583E-01	0.31253335E-01	0.31254141E-01
ENF	0.29718645E-01	0.29715319E-01	0.29711470E-01	0.29707093E-01	0.29702178E-01	0.29696728E-01
DSYLN	0.00000000E-38	0.00000000E-38	0.00000000E-38	0.00000000E-38	0.00000000E-38	0.00000000E-38
DSYLHN	0.00000000E-38	0.00000000E-38	0.00000000E-38	0.00000000E-38	0.00000000E-38	0.00000000E-38

	13	14	15	16	17	18
SNL	-0.13439328E 06	-0.13460553E 06	-0.13483611E 06	-0.13508534E 06	-0.13535359E 06	-0.13564125E 06
SNLH	-0.57253901E 04	-0.57569468E 04	-0.57913826E 04	-0.58287856E 04	-0.58692534E 04	-0.59128939E 04
SNF	0.36816502E 06	0.36808376E 06	0.36799550E 06	0.36790008E 06	0.36779743E 06	0.36768739E 06
ENL	0.25900429E-01	0.25893862E-01	0.25886748E-01	0.25879059E-01	0.25870776E-01	0.25861908E-01
ENLH	0.31255019E-01	0.31256018E-01	0.31257051E-01	0.31258177E-01	0.31259391E-01	0.31260664E-01
ENF	0.29690728E-01	0.29684174E-01	0.29677056E-01	0.29669361E-01	0.29661083E-01	0.29652209E-01
DSYLN	0.00000000E-38	0.00000000E-38	0.00000000E-38	0.00000000E-38	0.00000000E-38	0.00000000E-38
DSYLHN	0.00000000E-38	0.00000000E-38	0.00000000E-38	0.00000000E-38	0.00000000E-38	0.00000000E-38

	19	20	21	22	23	24
SNL	-0.13594874E 06	-0.13627653E 06	-0.13662513E 06	-0.13699505E 06	-0.13738691E 06	-0.13780131E 06
SNLH	-0.59598234E 04	-0.60101716E 04	-0.60640804E 04	-0.61217030E 04	-0.61832093E 04	-0.62487834E 04
SNF	0.36756979E 06	0.36744446E 06	0.36731127E 06	0.36716993E 06	0.36702028E 06	0.36686206E 06
ENL	0.25852419E-01	0.25842312E-01	0.25831571E-01	0.25820182E-01	0.25808117E-01	0.25795353E-01
ENLH	0.31262049E-01	0.31263495E-01	0.31265009E-01	0.31266612E-01	0.31268298E-01	0.31270071E-01
ENF	0.29642725E-01	0.29632618E-01	0.29621877E-01	0.29610478E-01	0.29598410E-01	0.29585650E-01
DSYLN	0.00000000E-38	0.00000000E-38	0.00000000E-38	0.00000000E-38	0.00000000E-38	0.00000000E-38
DSYLHN	0.00000000E-38	0.00000000E-38	0.00000000E-38	0.00000000E-38	0.00000000E-38	0.00000000E-38

DESIGN DATA FOR GEODESIC ISOTENSOID CONTOUR

SERVICE CYCLE 2

P NEW	TL NEW	TF NEW
0.0000	75.0000	75.0000

101

	25	26	27	28	29	30
SNL	-0.13823897E 06	-0.13870059E 06	-0.13918699E 06	-0.13969899E 06	-0.14023754E 06	-0.14080363E 06
SNLH	-0.63186277E 04	-0.63929620E 04	-0.64720294E 04	-0.65560920E 04	-0.66454409E 04	-0.67403934E 04
SNF	0.36669507E 06	0.36651899E 06	0.36633359E 06	0.36613848E 06	0.36593337E 06	0.36571791E 06
ENL	0.25781886E-01	0.25767681E-01	0.25752722E-01	0.25736998E-01	0.25720442E-01	0.25703068E-01
ENLH	0.31271914E-01	0.31273850E-01	0.31275845E-01	0.31277914E-01	0.31280101E-01	0.31282336E-01
ENF	0.29572183E-01	0.29557983E-01	0.29543031E-01	0.29527296E-01	0.29510756E-01	0.29493380E-01
DSYLN	0.00000000E-38	0.00000000E-38	0.00000000E-38	0.00000000E-38	0.00000000E-38	0.00000000E-38
DSYLHN	0.00000000E-38	0.00000000E-38	0.00000000E-38	0.00000000E-38	0.00000000E-38	0.00000000E-38

	31	32	33	34	35	36
SNL	-0.14139834E 06	-0.14202280E 06	-0.14267829E 06	-0.14336617E 06	-0.14408787E 06	-0.14484504E 06
SNLH	-0.68412979E 04	-0.69485377E 04	-0.70625354E 04	-0.71837573E 04	-0.73127167E 04	-0.74499847E 04
SNF	0.36549171E 06	0.36525430E 06	0.36500526E 06	0.36474414E 06	0.36447034E 06	0.36418335E 06
ENL	0.25684824E-01	0.25665673E-01	0.25645611E-01	0.25624544E-01	0.25602472E-01	0.25579322E-01
ENLH	0.31284648E-01	0.31287045E-01	0.31289495E-01	0.31292018E-01	0.31294626E-01	0.31297297E-01
ENF	0.29475138E-01	0.29455991E-01	0.29435908E-01	0.29414850E-01	0.29392769E-01	0.29369625E-01
DSYLN	0.00000000E-38	0.00000000E-38	0.00000000E-38	0.00000000E-38	0.00000000E-38	0.00000000E-38
DSYLHN	0.00000000E-38	0.00000000E-38	0.00000000E-38	0.00000000E-38	0.00000000E-38	0.00000000E-38

	37	38	39	40	41	42
SNL	-0.14563936E 06	-0.14647273E 06	-0.14734719E 06	-0.14826496E 06	-0.14922849E 06	-0.15024047E 06
SNLH	-0.75961921E 04	-0.77520428E 04	-0.79183199E 04	-0.80958978E 04	-0.82857589E 04	-0.84890063E 04
SNF	0.36388252E 06	0.36356719E 06	0.36323664E 06	0.36289004E 06	0.36252655E 06	0.36214530E 06
ENL	0.25555065E-01	0.25529637E-01	0.25502971E-01	0.25475029E-01	0.25445726E-01	0.25414969E-01
ENLH	0.31300006E-01	0.31302780E-01	0.31305613E-01	0.31308483E-01	0.31311385E-01	0.31314307E-01
ENF	0.29345364E-01	0.29319935E-01	0.29293277E-01	0.29265325E-01	0.29236012E-01	0.29205266E-01
DSYLN	0.00000000E-38	0.00000000E-38	0.00000000E-38	0.00000000E-38	0.00000000E-38	0.00000000E-38
DSYLHN	0.00000000E-38	0.00000000E-38	0.00000000E-38	0.00000000E-38	0.00000000E-38	0.00000000E-38

	43	44	45	46	47	48
SNL	-0.15130380E 06	-0.15242170E 06	-0.15359772E 06	-0.15483577E 06	-0.15614022E 06	-0.15751588E 06
SNLH	-0.87068831E 04	-0.89407963E 04	-0.91923422E 04	-0.94633434E 04	-0.97558844E 04	-0.10072361E 05
SNF	0.36174520E 06	0.36132512E 06	0.36088380E 06	0.36041993E 06	0.35993202E 06	0.35941838E 06
ENL	0.25382699E-01	0.25348817E-01	0.25313229E-01	0.25275823E-01	0.25236480E-01	0.25195057E-01
ENLH	0.31317234E-01	0.31320157E-01	0.31323066E-01	0.31325927E-01	0.31328702E-01	0.31331387E-01
ENF	0.29173000E-01	0.29139122E-01	0.29103532E-01	0.29066124E-01	0.29026776E-01	0.28985353E-01
DSYLN	0.00000000E-38	0.00000000E-38	0.00000000E-38	0.00000000E-38	0.00000000E-38	0.00000000E-38
DSYLHN	0.00000000E-38	0.00000000E-38	0.00000000E-38	0.00000000E-38	0.00000000E-38	0.00000000E-38

DESIGN DATA FOR GEODESIC ISOTENSOID CONTOUR

SERVICE CYCLE 2

P NEW	TL NEW	TF NEW
0.0000	75.0000	75.0000

102

	49	50	51	52	53	54
SNL	-0.15896817E 06	-0.16050307E 06	-0.16212737E 06	-0.16384870E 06	-0.16567572E 06	-0.16761829E 06
SNLH	-0.10415545E 05	-0.10788649E 05	-0.11195431E 05	-0.11640298E 05	-0.12128468E 05	-0.12666152E 05
SNF	0.35887725E 06	0.35830649E 06	0.35770387E 06	0.35706682E 06	0.35639254E 06	0.35567779E 06
ENL	0.25151408E-01	0.25105381E-01	0.25056778E-01	0.25005416E-01	0.24951043E-01	0.24893397E-01
ENLH	0.31333914E-01	0.31336257E-01	0.31338356E-01	0.31340128E-01	0.31341500E-01	0.31342359E-01
ENF	0.28941713E-01	0.28895685E-01	0.28847086E-01	0.28795711E-01	0.28741333E-01	0.28683692E-01
DSYLN	0.00000000E-38	0.00000000E-38	0.00000000E-38	0.00000000E-38	0.00000000E-38	0.00000000E-38
DSYLHN	0.00000000E-38	0.00000000E-38	0.00000000E-38	0.00000000E-38	0.00000000E-38	0.00000000E-38

	55	56	57	58	59	60
SNL	-0.16968766E 06	-0.17189679E 06	-0.17426073E 06	-0.17679694E 06	-0.17952594E 06	-0.18247206E 06
SNLH	-0.13260803E 05	-0.13921435E 05	-0.14659068E 05	-0.15487287E 05	-0.16423048E 05	-0.17487781E 05
SNF	0.35491889E 06	0.35411173E 06	0.35325163E 06	0.35233311E 06	0.35134989E 06	0.35029478E 06
ENL	0.24832198E-01	0.24767105E-01	0.24697741E-01	0.24623654E-01	0.24544364E-01	0.24459294E-01
ENLH	0.31342575E-01	0.31341970E-01	0.31340321E-01	0.31337398E-01	0.31332788E-01	0.31326036E-01
ENF	0.28622491E-01	0.28557397E-01	0.28488034E-01	0.28413960E-01	0.28334668E-01	0.28249579E-01
DSYLN	0.00000000E-38	0.00000000E-38	0.00000000E-38	0.00000000E-38	0.00000000E-38	0.00000000E-38
DSYLHN	0.00000000E-38	0.00000000E-38	0.00000000E-38	0.00000000E-38	0.00000000E-38	0.00000000E-38

	61	62	63	64	65	66
SNL	-0.18566435E 06	-0.18913779E 06	-0.19293512E 06	-0.19710912E 06	-0.20172590E 06	-0.20686965E 06
SNLH	-0.18708951E 05	-0.20122319E 05	-0.21775314E 05	-0.23732158E 05	-0.26081938E 05	-0.28951808E 05
SNF	0.34915939E 06	0.34793378E 06	0.34660638E 06	0.34516357E 06	0.34358918E 06	0.34186427E 06
ENL	0.24367722E-01	0.24268889E-01	0.24161835E-01	0.24045489E-01	0.23918520E-01	0.23779418E-01
ENLH	0.31316581E-01	0.31303561E-01	0.31285872E-01	0.31261883E-01	0.31229431E-01	0.31185145E-01
ENF	0.28158015E-01	0.28059176E-01	0.27952128E-01	0.27835772E-01	0.27708805E-01	0.27569699E-01
DSYLN	0.00000000E-38	0.00000000E-38	0.00000000E-38	0.00000000E-38	0.00000000E-38	0.00000000E-38
DSYLHN	0.00000000E-38	0.00000000E-38	0.00000000E-38	0.00000000E-38	0.00000000E-38	0.00000000E-38

	67	68	69	70	71	72
SNL	-0.21264956E 06	-0.21921026E 06	-0.22674786E 06	-0.23553565E 06	-0.24051455E 06	-0.24596526E 06
SNLH	-0.32529499E 05	-0.37103797E 05	-0.43142075E 05	-0.51451222E 05	-0.56884625E 05	-0.63547878E 05
SNF	0.33996697E 06	0.33787294E 06	0.33555786E 06	0.33300598E 06	0.33164420E 06	0.33023627E 06
ENL	0.23626414E-01	0.23457518E-01	0.23270824E-01	0.23065038E-01	0.22955228E-01	0.22841694E-01
ENLH	0.31124030E-01	0.31038146E-01	0.30914265E-01	0.30729016E-01	0.30600711E-01	0.30437227E-01
ENF	0.27416691E-01	0.27247818E-01	0.27061118E-01	0.26855321E-01	0.26745500E-01	0.26631957E-01
DSYLN	0.00000000E-38	0.00000000E-38	0.00000000E-38	0.00000000E-38	0.00000000E-38	0.00000000E-38
DSYLHN	0.00000000E-38	0.00000000E-38	0.00000000E-38	0.00000000E-38	0.00000000E-38	0.00000000E-38

DESIGN DATA FOR GEODESIC ISOTENSOID CONTOUR

SERVICE CYCLE 2

P NEW	TL NEW	TF NEW
0.0000	75.0000	75.0000

103

	73	74	75	76	77	78
SNL	-0.25196580E 06	-0.25861093E 06	-0.26601398E 06	-0.27430483E 06	-0.29014448E 06	-0.30086516E 06
SNLH	-0.71896368E 05	-0.82636280E 05	-0.96921034E 05	-0.11676284E 06	-0.14935150E 06	-0.19730433E 06
SNF	0.32880375E 06	0.32739062E 06	0.32608511E 06	0.32506854E 06	0.33221217E 06	0.33362031E 06
ENL	0.22726155E-01	0.22612187E-01	0.22506902E-01	0.22424917E-01	0.15916570E-01	0.16331129E-01
ENLH	0.30224718E-01	0.29941276E-01	0.29551032E-01	0.28990383E-01	0.28010783E-01	0.25302514E-01
ENF	0.26516431E-01	0.26402469E-01	0.26297186E-01	0.26215205E-01	0.26791304E-01	0.26904864E-01
DSYLN	0.00000000E-38	0.00000000E-38	0.00000000E-38	0.00000000E-38	0.00000000E-38	0.00000000E-38
DSYLHN	0.00000000E-38	0.00000000E-38	0.00000000E-38	0.00000000E-38	0.00000000E-38	0.00000000E-38

	79	80	81	82	83	84
SNL	-0.30520823E 06	-0.31080157E 06	0.46097020E 06	-0.15500412E 07	-0.29472495E 06	-0.28367554E 06
SNLH	-0.27813742E 06	-0.35253392E 06	0.69116966E 06	-0.33909783E 07	-0.72589859E 06	-0.13752216E 07
SNF	0.33139895E 06	0.33777721E 06	-0.51027471E 06	0.18116668E 07	0.35268577E 06	0.40859216E 06
ENL	0.22935447E-01	0.23449814E-01	0.72031777E-01	-0.18279274E-01	0.24652139E-01	0.29160706E-01
ENLH	0.24097933E-01	0.21770406E-01	0.54558041E 00	-0.94886011E-01	-0.34490934E-01	-0.54568747E-01
ENF	0.26725722E-01	0.27240098E-01	-0.41151186E-01	0.14610216E 00	0.28442400E-01	0.32950980E-01
DSYLN	0.00000000E-38	0.00000000E-38	0.00000000E-38	0.00000000E-38	0.00000000E-38	0.00000000E-38
DSYLHN	0.00000000E-38	0.00000000E-38	0.00000000E-38	0.00000000E-38	0.00000000E-38	0.00000000E-38

	85	86
SNL	-0.10332704E 05	-0.10600221E-02
SNLH	-0.16649853E 07	-0.15912764E 07
SNF	0.71553511E 05	0.67964058E 05
ENL	0.19801306E-02	0.16906626E-02
ENLH	0.80113176E 00	0.79797896E 00
ENF	0.57704444E-02	0.54809724E-02
DSYLN	0.00000000E-38	0.00000000E-38
DSYLHN	0.00000000E-38	0.00000000E-38

DESIGN DATA FOR GEODESIC ISOTENSOID CONTOUR

SERVICE CYCLE 2

P NEW	TL NEW	TF NEW
0.0000	75.0000	75.0000

104

CYLINDER PROPERTIES

SNL	=	-0.14485044E 06
SNLH	=	-0.33654575E 06
SNF	=	0.40088687E 06
SNFH	=	0.30195000E 06
ENL	=	0.28539245E-01
ENLH	=	0.21900602E-01
ENF	=	0.32329586E-01
ENFH	=	0.25690877E-01
DSYLHN	=	0.00000000E-38
DSYLHN	=	0.00000000E-38

2

FILAMENT REINFORCED METAL-SHELL PRESSURE VESSELS

AEROJET GENERAL CORP., VON KARMAN CENTER

105

BASIC INPUT

TITLE CARD

SAMPLE CASE NØ. 2, TITANIUM METAL-SHELL

VLEN	A	XØ1	XØ2	C	
20.	10.	2.	2.	.038	
RHØL	ALFL	SYL	DSYLDT	SYLC	DSYLCDT
.162	3.91 -06	1.0 +05	197.3	9.0 +04	180.5
EL	DELDT	EI	DEIDT	VL	DNULDT
1.55 +07	6210.	7.03 +05	74.3	.295	2.01 -05
RHØG	ALFF	EF	DEFDT	BIK	
.072	2.01 -06	1.24 +07	2410.	.673	
PD	SØF	SØL	TR	TDF	TDL
3335.	4.7 +04	0.0	75.	75.	75.
TØ	SFD	EBLH	TL	SØLH	CYLN
	3.3 +05		.09708		1.0
EBL					
					IRCASE
					1

SAMPLE CASE NO. 2, TITANIUM METAL-SHELL
INPUT

106

VLEN	A	XO1	XO2	C	
20.000	10.0000	2.000	2.000	0.03800	
RHOL	ALFL	SYL	DSYLDT	SYLC	DSYCDT
0.162	0.00000391	100000.0	-197.3	90000.0	-180.5
EL	DELDT	F1	DEIDT	VL	DNULDT
1.5500000E 07	-6210.0	7.0300000E 05	-74.3	0.29500	-0.0000201
RHO G	ALPHA F	EF	DEFDT	K	
0.07200	2.0100000E-06	1.2400000E 07	-2410.0	0.67300	
PD	SDF	SOL	TR	TDF	TDL
3335.0	4.7000000E 04	0.0000000E-39	75.00	75.00	75.00
TO	SFD	EBLH	TL	SOLH	CYLN
-0.00000	3.3000000E 05	-0.0000000E-39	0.0971	-0.0000000E-39	1.00
EBL					
-0.0000000E-39					

2.

SAMPLE CASE NO. 2, TITANIUM METAL-SHELL

107

243

SAMPLE CASE NO. 2, TITANIUM METAL-SHELL

DESIGN DATA AT THE EQUATOR

108

EFT =	0.12400000E 08	SYLCT=	0.90000000E 05
ELT =	0.15500000E 08	TL =	0.97080000E-01
E1T =	0.70300000E 06	PD =	0.33350000E 04
VLT =	0.29500000E 00	SOF =	0.47000000E 05
SYLT =	0.10000000E 06	SFD =	0.33000000E 06

	HEAD NO. 1	HEAD NO. 2
TO =	0.21271082E-01	0.21271082E-01
TE =	0.13537050E-01	0.13537050E-01
PW =	0.12724827E 03	0.12724827E 03
SOL =	0.00000000E-38	0.00000000E-38
SOLH =	0.45289004E 04	0.45289004E 04
SOLP =	-0.60404208E 04	-0.60404208E 04
SOLHP=	-0.34732771E 03	-0.34732771E 03
SOFP =	0.43318453E 05	0.43318453E 05
SOLT =	-0.60404208E 04	-0.60404208E 04
SOLHT=	-0.34732771E 03	-0.34732771E 03
SOFT =	0.43318453E 05	0.43318453E 05
SBL =	0.12574962E 06	0.12574962E 06
SBLH =	0.12592685E 06	0.12592685E 06
K =	0.73210037E 00	0.73210037E 00

34

SAMPLE CASE NO. 2, TITANIUM METAL-SHELL

109

DESIGN DATA FOR BALANCED IN PLANE WRAP CONTOUR

CONTOUR INPUT DATA ABIG = 0.239793 C = 0.000004 V LEN = 16.681069

	1	2	3	4	5	6
Z	0.10000000E 01	0.99993741E 00	0.99974963E 00	0.99943659E 00	0.99899814E 00	0.99843407E 00
U	0.00000000E-38	0.10000000E-01	0.20000000E-01	0.30000000E-01	0.40000000E-01	0.49999999E-01
PHI	0.90000243E 02	0.89282980E 02	0.88565825E 02	0.87848472E 02	0.87130816E 02	0.86412756E 02
ALPHA	0.13484512E 02	0.13485161E 02	0.13487102E 02	0.13490339E 02	0.13494874E 02	0.13500715E 02
THETA	0.89999812E 02	0.89862412E 02	0.89724959E 02	0.89587402E 02	0.89449688E 02	0.89311761E 02
R ONE	0.79906446E 01	0.79907106E 01	0.79909090E 01	0.79912397E 01	0.79917033E 01	0.79923003E 01
R TWO	0.10000000E 02	0.10000157E 02	0.10000629E 02	0.10001417E 02	0.10002520E 02	0.10003942E 02
T	0.21271081E-01	0.21272470E-01	0.21276639E-01	0.21283591E-01	0.21293337E-01	0.21305888E-01
X	0.10000000E 02	0.99993740E 01	0.99974962E 01	0.99943658E 01	0.99899813E 01	0.99843407E 01
Y	0.00000000E-38	0.10000000E 00	0.20000000E 00	0.30000000E 00	0.39999999E 00	0.49999999E 00
XFO	0.10001679E 02	0.10010009E 02	0.10008131E 02	0.10005000E 02	0.10000615E 02	0.99949727E 01
YFO	0.10502209E-01	0.10013311E 00	0.20026626E 00	0.30039952E 00	0.40053293E 00	0.50066653E 00
XFI	0.99983212E 01	0.99887385E 01	0.99868612E 01	0.99837315E 01	0.99793479E 01	0.99737085E 01
YFI	-0.10502209E-01	0.99866891E-01	0.19973373E 00	0.29960047E 00	0.39946706E 00	0.49933345E 00
XM	0.99829973E 01	0.98916662E 01	0.98898116E 01	0.98867199E 01	0.98823897E 01	0.98768188E 01
YM	-0.10636517E 00	0.98651973E-01	0.19730392E 00	0.29595580E 00	0.39460759E 00	0.49325926E 00
SOL	0.00000000E-38	-0.28955890E 00	-0.11578450E 01	-0.26062254E 01	-0.46361651E 01	-0.72501056E 01
SOLH	0.45289000E 04	0.45288558E 04	0.45287234E 04	0.45285023E 04	0.45281923E 04	0.45277925E 04
SOF	0.47000000E 05	0.47000000E 05	0.47000000E 05	0.47000000E 05	0.47000000E 05	0.47000000E 05
EOL	0.00000000E-38	0.00000000E-38	0.00000000E-38	0.00000000E-38	0.00000000E-38	0.00000000E-38
EOLH	0.00000000E-38	0.00000000E-38	0.00000000E-38	0.00000000E-38	0.00000000E-38	0.00000000E-38
EOF	0.37903226E-02	0.37903226E-02	0.37903226E-02	0.37903226E-02	0.37903226E-02	0.37903226E-02
SOLP	-0.60404303E 04	-0.60407850E 04	-0.60418497E 04	-0.60436255E 04	-0.60461144E 04	-0.60493194E 04
SOLHP	-0.34731642E 03	-0.34737151E 03	-0.34753656E 03	-0.34781192E 03	-0.34819804E 03	-0.34869573E 03
SOFP	0.43318442E 05	0.43318393E 05	0.43318243E 05	0.43317995E 05	0.43317645E 05	0.43317196E 05
EOLP	-0.29689977E-03	-0.29690377E-03	-0.29691581E-03	-0.29693590E-03	-0.29696407E-03	-0.29700033E-03
EOLHP	-0.19963157E-03	-0.19963104E-03	-0.19962941E-03	-0.19962668E-03	-0.19962285E-03	-0.19961792E-03
EOFP	0.34934228E-02	0.34934187E-02	0.34934067E-02	0.34933866E-02	0.34933585E-02	0.34933222E-02
SOLT	-0.60404303E 04	-0.60407850E 04	-0.60418497E 04	-0.60436255E 04	-0.60461144E 04	-0.60493194E 04
SOLHT	-0.34731642E 03	-0.34737151E 03	-0.34753656E 03	-0.34781192E 03	-0.34819804E 03	-0.34869573E 03
SOFT	0.43318442E 05	0.43318393E 05	0.43318243E 05	0.43317995E 05	0.43317645E 05	0.43317196E 05
EOLT	-0.29689977E-03	-0.29690377E-03	-0.29691581E-03	-0.29693590E-03	-0.29696407E-03	-0.29700033E-03
EOLHT	-0.19963157E-03	-0.19963104E-03	-0.19962941E-03	-0.19962668E-03	-0.19962285E-03	-0.19961792E-03
EOFT	0.34934228E-02	0.34934187E-02	0.34934067E-02	0.34933866E-02	0.34933585E-02	0.34933222E-02
SBL	0.12574960E 06	0.12574958E 06	0.12574950E 06	0.12574938E 06	0.12574920E 06	0.12574897E 06
SBLH	0.12592693E 06	0.12592693E 06	0.12592693E 06	0.12592692E 06	0.12592690E 06	0.12592687E 06
SFD	0.32999954E 06	0.32999933E 06	0.32999870E 06	0.32999769E 06	0.32999629E 06	0.32999449E 06
EDL	0.22822546E-01	0.22822527E-01	0.22822477E-01	0.22822397E-01	0.22822280E-01	0.22822139E-01
EDLH	0.22822531E-01	0.22822544E-01	0.22822587E-01	0.22822644E-01	0.22822728E-01	0.22822826E-01
EFD	0.26612866E-01	0.26612849E-01	0.26612798E-01	0.26612717E-01	0.26612604E-01	0.26612459E-01

245

SAMPLE CASE NO. 2, TITANIUM METAL-SHELL

110

DESIGN DATA FOR BALANCED IN PLANE WRAP CONTOUR

CONTOUR INPUT DATA ABIG = 0.239793 C = 0.000004 V LEN = 16.681069

	7	8	9	10	11	12
Z	0.99774416E 00	0.99692806E 00	0.99598540E 00	0.99491577E 00	0.99371864E 00	0.99239347E 00
U	0.59999999E-01	0.69999998E-01	0.79999998E-01	0.89999998E-01	0.99999998E-01	0.11000000E 00
PHI	0.85694193E 02	0.84975020E 02	0.84255139E 02	0.83534444E 02	0.82812828E 02	0.82090187E 02
ALPHA	0.13507868E 02	0.13516343E 02	0.13526150E 02	0.13537302E 02	0.13549814E 02	0.13563701E 02
THETA	0.89173572E 02	0.89035064E 02	0.88896182E 02	0.88756873E 02	0.88617080E 02	0.88476744E 02
R ONE	0.79930321E 01	0.79938991E 01	0.79949030E 01	0.79960449E 01	0.79973264E 01	0.79987499E 01
R TWO	0.10005683E 02	0.10007745E 02	0.10010130E 02	0.10012843E 02	0.10015884E 02	0.10019259E 02
T	0.21321260E-01	0.21339472E-01	0.21360548E-01	0.21384515E-01	0.21411403E-01	0.21441247E-01
X	0.99774415E 01	0.99692805E 01	0.99598540E 01	0.99491576E 01	0.99371864E 01	0.99239347E 01
Y	0.59999999E 00	0.69999998E 00	0.79999998E 00	0.89999998E 00	0.99999998E 00	0.11000000E 01
XFO	0.99880720E 01	0.99799092E 01	0.99704806E 01	0.99597818E 01	0.99478079E 01	0.99345533E 01
YFO	0.60080039E 00	0.70093454E 00	0.80106907E 00	0.90120399E 00	0.10013394E 01	0.11014753E 01
XFT	0.99668109E 01	0.99586517E 01	0.99492273E 01	0.99385333E 01	0.99265647E 01	0.99133160E 01
YFT	0.59919958E 00	0.69906541E 00	0.79893089E 00	0.89879595E 00	0.99866056E 00	0.10985246E 01
XM	0.98700050E 01	0.98619448E 01	0.98526349E 01	0.98420707E 01	0.98302475E 01	0.98171597E 01
YM	0.59191078E 00	0.69056211E 00	0.78921325E 00	0.88786412E 00	0.98651473E 00	0.10851650E 01
SOL	-0.10450879E 02	-0.14242489E 02	-0.18629136E 02	-0.23616385E 02	-0.29209901E 02	-0.35416423E 02
SOLH	0.45273028E 04	0.45267215E 04	0.45260479E 04	0.45252808E 04	0.45244182E 04	0.45234590E 04
SOF	0.47000000E 05	0.47000000E 05	0.47000000E 05	0.47000000E 05	0.47000000E 05	0.47000000E 05
EOL	0.00000000E-38	0.00000000E-38	0.00000000E-38	0.00000000E-38	0.00000000E-38	0.00000000E-38
EOLH	0.00000000E-38	0.00000000E-38	0.00000000E-38	0.00000000E-38	0.00000000E-38	0.00000000E-38
EOF	0.37903226E-02	0.37903226E-02	0.37903226E-02	0.37903226E-02	0.37903226E-02	0.37903226E-02
SOLP	-0.60532438E 04	-0.60578926E 04	-0.60632709E 04	-0.60693851E 04	-0.60762425E 04	-0.60838511E 04
SOLHP	-0.34930585E 03	-0.35002960E 03	-0.35086834E 03	-0.35182370E 03	-0.35289750E 03	-0.35409185E 03
SOFP	0.43316645E 05	0.43315992E 05	0.43315238E 05	0.43314381E 05	0.43313420E 05	0.43312354E 05
EOLP	-0.29704473E-03	-0.29709732E-03	-0.29715816E-03	-0.29722728E-03	-0.29730480E-03	-0.29739078E-03
EOLHP	-0.19961191E-03	-0.19960479E-03	-0.19959657E-03	-0.19958727E-03	-0.19957684E-03	-0.19956533E-03
EOFP	0.34932778E-02	0.34932252E-02	0.34931643E-02	0.34930952E-02	0.34930177E-02	0.34929317E-02
SOLT	-0.60532438E 04	-0.60578926E 04	-0.60632709E 04	-0.60693851E 04	-0.60762425E 04	-0.60838511E 04
SOLHT	-0.34930585E 03	-0.35002960E 03	-0.35086834E 03	-0.35182370E 03	-0.35289750E 03	-0.35409185E 03
SOFT	0.43316645E 05	0.43315992E 05	0.43315238E 05	0.43314381E 05	0.43313420E 05	0.43312354E 05
EOLT	-0.29704473E-03	-0.29709732E-03	-0.29715816E-03	-0.29722728E-03	-0.29730480E-03	-0.29739078E-03
EOLHT	-0.19961191E-03	-0.19960479E-03	-0.19959657E-03	-0.19958727E-03	-0.19957684E-03	-0.19956533E-03
EOFT	0.34932778E-02	0.34932252E-02	0.34931643E-02	0.34930952E-02	0.34930177E-02	0.34929317E-02
SBL	0.12574870E 06	0.12574837E 06	0.12574799E 06	0.12574756E 06	0.12574707E 06	0.12574654E 06
SBLH	0.12592685E 06	0.12592681E 06	0.12592678E 06	0.12592673E 06	0.12592668E 06	0.12592663E 06
SFD	0.32999229E 06	0.32998969E 06	0.32998670E 06	0.32998327E 06	0.32997948E 06	0.32997521E 06
EDL	0.22821960E-01	0.22821749E-01	0.22821509E-01	0.22821233E-01	0.22820925E-01	0.22820583E-01
EDLH	0.22822963E-01	0.22823110E-01	0.22823286E-01	0.22823487E-01	0.22823703E-01	0.22823954E-01
EFD	0.26612281E-01	0.26612072E-01	0.26611830E-01	0.26611554E-01	0.26611248E-01	0.26610904E-01

246

SAMPLE CASE NO. 2, TITANIUM METAL-SHELL

111

DESIGN DATA FOR BALANCED IN PLANE WRAP CONTOUR

CONTOUR INPUT DATA ABIG = 0.239793 C = 0.000004 V LEN = 16.681069

	13	14	15	16	17	18
Z	0.99093964E 00	0.98935646E 00	0.98764318E 00	0.98579898E 00	0.98382296E 00	0.98171418E 00
U	0.12000000E 00	0.13000000E 00	0.14000000E 00	0.14999999E 00	0.15999999E 00	0.16999999E 00
PHI	0.81366413E 02	0.80641396E 02	0.79915027E 02	0.79187192E 02	0.78457778E 02	0.77726667E 02
ALPHA	0.13578983E 02	0.13595679E 02	0.13613812E 02	0.13633406E 02	0.13654487E 02	0.13677087E 02
THETA	0.88335807E 02	0.88194210E 02	0.88051891E 02	0.87908789E 02	0.87764836E 02	0.87619968E 02
R ONE	0.80003170E 01	0.80020300E 01	0.80038915E 01	0.80059044E 01	0.80080717E 01	0.80103968E 01
R TWO	0.10022972E 02	0.10027026E 02	0.10031427E 02	0.10036180E 02	0.10041290E 02	0.10046765E 02
T	0.21474087E-01	0.21509964E-01	0.21548928E-01	0.21591031E-01	0.21636329E-01	0.21684885E-01
X	0.99093963E 01	0.98935646E 01	0.98764318E 01	0.98579897E 01	0.98382295E 01	0.98171418E 01
Y	0.12000000E 01	0.13000000E 01	0.13999999E 01	0.14999999E 01	0.15999999E 01	0.16999999E 01
XFO	0.99200116E 01	0.99041764E 01	0.98870398E 01	0.98685935E 01	0.98488289E 01	0.98277364E 01
YFO	0.12016118E 01	0.13017489E 01	0.14018866E 01	0.15020252E 01	0.16021645E 01	0.17023047E 01
XFI	0.98987808E 01	0.98829527E 01	0.98658237E 01	0.98473858E 01	0.98276300E 01	0.98065470E 01
YFI	0.11983882E 01	0.12982510E 01	0.13981132E 01	0.14979747E 01	0.15978353E 01	0.16976950E 01
XM	0.98028009E 01	0.97871648E 01	0.97702438E 01	0.97520294E 01	0.97325133E 01	0.97116859E 01
YM	0.11838150E 01	0.12824645E 01	0.13811136E 01	0.14797623E 01	0.15784105E 01	0.16770581E 01
SOL	-0.42243567E 02	-0.49699245E 02	-0.57792929E 02	-0.66534678E 02	-0.75935332E 02	-0.86006318E 02
SOLH	0.45224013E 04	0.45212425E 04	0.45199805E 04	0.45186128E 04	0.45171364E 04	0.45155485E 04
SOF	0.47000000E 05	0.47000000E 05	0.47000000E 05	0.47000000E 05	0.47000000E 05	0.47000000E 05
EOL	0.00000000E-38	0.00000000E-38	0.00000000E-38	0.00000000E-38	0.00000000E-38	0.00000000E-38
EOLH	0.00000000E-38	0.00000000E-38	0.00000000E-38	0.00000000E-38	0.00000000E-38	0.00000000E-38
EOF	0.37903226E-02	0.37903226E-02	0.37903226E-02	0.37903226E-02	0.37903226E-02	0.37903226E-02
SOLP	-0.60922197E 04	-0.61013585E 04	-0.61112786E 04	-0.61219922E 04	-0.61335124E 04	-0.61458535E 04
SOLHP	-0.35540910E 03	-0.35685183E 03	-0.35842296E 03	-0.36012569E 03	-0.36196350E 03	-0.36394024E 03
SOFP	0.43311183E 05	0.43309902E 05	0.43308514E 05	0.43307016E 05	0.43305405E 05	0.43303681E 05
EOLP	-0.29748529E-03	-0.29758848E-03	-0.29770043E-03	-0.29782127E-03	-0.29795113E-03	-0.29809019E-03
EOLHP	-0.19955273E-03	-0.19953902E-03	-0.19952420E-03	-0.19950829E-03	-0.19949126E-03	-0.19947314E-03
EOFP	0.34928373E-02	0.34927340E-02	0.34926221E-02	0.34925013E-02	0.34923714E-02	0.34922323E-02
SOLT	-0.60922197E 04	-0.61013585E 04	-0.61112786E 04	-0.61219922E 04	-0.61335124E 04	-0.61458535E 04
SOLHT	-0.35540910E 03	-0.35685183E 03	-0.35842296E 03	-0.36012569E 03	-0.36196350E 03	-0.36394024E 03
SOFT	0.43311183E 05	0.43309902E 05	0.43308514E 05	0.43307016E 05	0.43305405E 05	0.43303681E 05
EOLT	-0.29748529E-03	-0.29758848E-03	-0.29770043E-03	-0.29782127E-03	-0.29795113E-03	-0.29809019E-03
EOLHT	-0.19955273E-03	-0.19953902E-03	-0.19952420E-03	-0.19950829E-03	-0.19949126E-03	-0.19947314E-03
EOFT	0.34928373E-02	0.34927340E-02	0.34926221E-02	0.34925013E-02	0.34923714E-02	0.34922323E-02
SBL	0.12574595E 06	0.12574530E 06	0.12574460E 06	0.12574385E 06	0.12574303E 06	0.12574216E 06
SBLH	0.12592657E 06	0.12592650E 06	0.12592643E 06	0.12592635E 06	0.12592627E 06	0.12592617E 06
SFD	0.32997053E 06	0.32996546E 06	0.32995992E 06	0.32995393E 06	0.32994750E 06	0.32994062E 06
EDL	0.22820205E-01	0.22819794E-01	0.22819349E-01	0.22818866E-01	0.22818349E-01	0.22817793E-01
EDLH	0.22824231E-01	0.22824529E-01	0.22824846E-01	0.22825197E-01	0.22825570E-01	0.22825971E-01
EFD	0.26610526E-01	0.26610117E-01	0.26609671E-01	0.26609188E-01	0.26608669E-01	0.26608115E-01

247

SAMPLE CASE NO. 2, TITANIUM METAL-SHELL

112

DESIGN DATA FOR BALANCED IN PLANE WRAP CONTOUR

CONTOUR INPUT DATA ABIG = 0.239793 C = 0.000004 V LEN = 16.681069

	19	20	21	22	23	24
Z	0.97947159E 00	0.97709407E 00	0.97458044E 00	0.97192940E 00	0.96913961E 00	0.96620958E 00
U	0.17999999E 00	0.18999998E 00	0.19999998E 00	0.20999998E 00	0.21999998E 00	0.22999998E 00
PHI	0.76993742E 02	0.76258881E 02	0.75521960E 02	0.74782851E 02	0.74041427E 02	0.73297550E 02
ALPHA	0.13701234E 02	0.13726965E 02	0.13754316E 02	0.13783327E 02	0.13814041E 02	0.13846504E 02
THETA	0.87474116E 02	0.87327209E 02	0.87179173E 02	0.87029932E 02	0.86879407E 02	0.86727516E 02
R ONE	0.80128833E 01	0.80155350E 01	0.80183562E 01	0.80213515E 01	0.80245259E 01	0.80278847E 01
R TWO	0.10052612E 02	0.10058837E 02	0.10065449E 02	0.10072456E 02	0.10079868E 02	0.10087695E 02
T	0.21736766E-01	0.21792045E-01	0.21850801E-01	0.21913121E-01	0.21979094E-01	0.22048820E-01
X	0.97947158E 01	0.97709407E 01	0.97458043E 01	0.97192940E 01	0.96913960E 01	0.96620958E 01
Y	0.17999999E 01	0.18999998E 01	0.19999998E 01	0.20999998E 01	0.21999998E 01	0.22999997E 01
XFO	0.98053052E 01	0.97815248E 01	0.97563827E 01	0.97298663E 01	0.97019620E 01	0.96726550E 01
YFO	0.18024459E 01	0.19025880E 01	0.20027313E 01	0.21028756E 01	0.22030213E 01	0.23031682E 01
XFI	0.97841262E 01	0.97603564E 01	0.97352258E 01	0.97087215E 01	0.96808299E 01	0.96515365E 01
YFI	0.17975538E 01	0.18974116E 01	0.19972684E 01	0.20971239E 01	0.21969783E 01	0.22968313E 01
XM	0.96895367E 01	0.96660550E 01	0.96412287E 01	0.96150453E 01	0.95874913E 01	0.95585523E 01
YM	0.17757052E 01	0.18743517E 01	0.19729975E 01	0.20716425E 01	0.21702868E 01	0.22689303E 01
SOL	-0.96761112E 02	-0.10821339E 03	-0.12037808E 03	-0.13327151E 03	-0.14691086E 03	-0.16131507E 03
SOLH	0.45138455E 04	0.45120237E 04	0.45100791E 04	0.45080075E 04	0.45058042E 04	0.45034639E 04
SOF	0.47000000E 05	0.47000000E 05	0.47000000E 05	0.47000000E 05	0.47000000E 05	0.47000000E 05
EOL	0.00000000E-38	0.00000000E-38	0.00000000E-38	0.00000000E-38	0.00000000E-38	0.00000000E-38
EOLH	0.00000000E-38	0.00000000E-38	0.00000000E-38	0.00000000E-38	0.00000000E-38	0.00000000E-38
EOF	0.37903226E-02	0.37903226E-02	0.37903226E-02	0.37903226E-02	0.37903226E-02	0.37903226E-02
SOLP	-0.61590310E 04	-0.61730620E 04	-0.61879642E 04	-0.62037574E 04	-0.62204626E 04	-0.62381024E 04
SOLHP	-0.36606007E 03	-0.36832757E 03	-0.37074768E 03	-0.37332577E 03	-0.37606768E 03	-0.37897977E 03
SOFP	0.43301841E 05	0.43299884E 05	0.43297806E 05	0.43295605E 05	0.43293280E 05	0.43290827E 05
EOLP	-0.29823856E-03	-0.29839644E-03	-0.29856401E-03	-0.29874146E-03	-0.29892900E-03	-0.29912686E-03
EOLHP	-0.19945393E-03	-0.19943360E-03	-0.19941218E-03	-0.19938967E-03	-0.19936607E-03	-0.19934138E-03
EOFP	0.34920840E-02	0.34919261E-02	0.34917585E-02	0.34915811E-02	0.34913936E-02	0.34911957E-02
SOLT	-0.61590310E 04	-0.61730620E 04	-0.61879642E 04	-0.62037574E 04	-0.62204626E 04	-0.62381024E 04
SOLHT	-0.36606007E 03	-0.36832757E 03	-0.37074768E 03	-0.37332577E 03	-0.37606768E 03	-0.37897977E 03
SOFT	0.43301841E 05	0.43299884E 05	0.43297806E 05	0.43295605E 05	0.43293280E 05	0.43290827E 05
EOLT	-0.29823856E-03	-0.29839644E-03	-0.29856401E-03	-0.29874146E-03	-0.29892900E-03	-0.29912686E-03
EOLHT	-0.19945393E-03	-0.19943360E-03	-0.19941218E-03	-0.19938967E-03	-0.19936607E-03	-0.19934138E-03
EOFT	0.34920840E-02	0.34919261E-02	0.34917585E-02	0.34915811E-02	0.34913936E-02	0.34911957E-02
SBL	0.12574123E 06	0.12574024E 06	0.12573919E 06	0.12573807E 06	0.12573689E 06	0.12573564E 06
SBLH	0.12592608E 06	0.12592598E 06	0.12592586E 06	0.12592574E 06	0.12592562E 06	0.12592549E 06
SFO	0.32993327E 06	0.32992542E 06	0.32991710E 06	0.32990827E 06	0.32989893E 06	0.32988905E 06
EDL	0.22817201E-01	0.22816567E-01	0.22815897E-01	0.22815183E-01	0.22814431E-01	0.22813634E-01
EDLH	0.22826399E-01	0.22826859E-01	0.22827341E-01	0.22827855E-01	0.22828398E-01	0.22828977E-01
EFO	0.26607521E-01	0.26606889E-01	0.26606217E-01	0.26605505E-01	0.26604752E-01	0.26603956E-01

SAMPLE CASE NO. 2, TITANIUM METAL-SHELL

113

DESIGN DATA FOR BALANCED IN PLANE WRAP CONTOUR

CONTOUR INPUT DATA ABIG = 0.239793 C = 0.000004 V LEN = 16.681069

	25	26	27	28	29	30
Z	0.96313779E 00	0.95992257E 00	0.95656219E 00	0.95305477E 00	0.94939834E 00	0.94559080E 00
U	0.23999997E 00	0.24999997E 00	0.25999997E 00	0.26999997E 00	0.27999996E 00	0.28999996E 00
PHI	0.72551086E 02	0.71801894E 02	0.71049828E 02	0.70294738E 02	0.69536469E 02	0.68774864E 02
ALPHA	0.13880767E 02	0.13916881E 02	0.13954906E 02	0.13994904E 02	0.14036939E 02	0.14081084E 02
THETA	0.86574173E 02	0.86419288E 02	0.86262768E 02	0.86104514E 02	0.85944424E 02	0.85782388E 02
R ONE	0.80314335E 01	0.80351785E 01	0.80391266E 01	0.80432849E 01	0.80476608E 01	0.80522629E 01
R TWO	0.10095947E 02	0.10104637E 02	0.10113776E 02	0.10123378E 02	0.10133458E 02	0.10144029E 02
T	0.22122407E-01	0.22199967E-01	0.22281624E-01	0.22367510E-01	0.22457767E-01	0.22552547E-01
X	0.96313778E 01	0.95992256E 01	0.95656219E 01	0.95305476E 01	0.94939834E 01	0.94559079E 01
Y	0.23999997E 01	0.24999997E 01	0.25999997E 01	0.26999997E 01	0.27999996E 01	0.28999996E 01
XFO	0.96419300E 01	0.96097704E 01	0.95761588E 01	0.95410764E 01	0.95045036E 01	0.94664192E 01
YFO	0.24033165E 01	0.25034662E 01	0.26036176E 01	0.27037706E 01	0.28039254E 01	0.29040820E 01
XFI	0.96208255E 01	0.95886807E 01	0.95550848E 01	0.95200187E 01	0.94834630E 01	0.94453965E 01
YFI	0.23966829E 01	0.24965331E 01	0.25963817E 01	0.26962287E 01	0.27960739E 01	0.28959172E 01
XM	0.95282127E 01	0.94964565E 01	0.94632664E 01	0.94286238E 01	0.93925093E 01	0.93549019E 01
YM	0.23675730E 01	0.24662147E 01	0.25648554E 01	0.26634950E 01	0.27621336E 01	0.28607709E 01
SOL	-0.17650407E 03	-0.19249944E 03	-0.20932403E 03	-0.22700285E 03	-0.24556206E 03	-0.26503048E 03
SOLH	0.45009810E 04	0.44983496E 04	0.44955633E 04	0.44926151E 04	0.44894969E 04	0.44862009E 04
SOF	0.47000000E 05	0.47000000E 05	0.47000000E 05	0.47000000E 05	0.47000000E 05	0.47000000E 05
EOL	0.00000000E-38	0.00000000E-38	0.00000000E-38	0.00000000E-38	0.00000000E-38	0.00000000E-38
EOLH	0.00000000E-38	0.00000000E-38	0.00000000E-38	0.00000000E-38	0.00000000E-38	0.00000000E-38
EOF	0.37903226E-02	0.37903226E-02	0.37903226E-02	0.37903226E-02	0.37903226E-02	0.37903226E-02
SOLP	-0.62567008E 04	-0.62762842E 04	-0.62968800E 04	-0.63185182E 04	-0.63412308E 04	-0.63650520E 04
SOLHP	-0.38206890E 03	-0.38534248E 03	-0.38880856E 03	-0.39247591E 03	-0.39635397E 03	-0.40045303E 03
SOFP	0.43288241E 05	0.43285523E 05	0.43282667E 05	0.43279669E 05	0.43276525E 05	0.43273232E 05
EOLP	-0.29933529E-03	-0.29955455E-03	-0.29978492E-03	-0.30002667E-03	-0.30028017E-03	-0.30054571E-03
EOLHP	-0.19931560E-03	-0.19928874E-03	-0.19926082E-03	-0.19923187E-03	-0.19920184E-03	-0.19917081E-03
EOFP	0.34909872E-02	0.34907680E-02	0.34905376E-02	0.34902959E-02	0.34900423E-02	0.34897768E-02
SOLT	-0.62567008E 04	-0.62762842E 04	-0.62968800E 04	-0.63185182E 04	-0.63412308E 04	-0.63650520E 04
SOLHT	-0.38206890E 03	-0.38534248E 03	-0.38880856E 03	-0.39247591E 03	-0.39635397E 03	-0.40045303E 03
SOFT	0.43288241E 05	0.43285523E 05	0.43282667E 05	0.43279669E 05	0.43276525E 05	0.43273232E 05
EOLT	-0.29933529E-03	-0.29955455E-03	-0.29978492E-03	-0.30002667E-03	-0.30028017E-03	-0.30054571E-03
EOLHT	-0.19931560E-03	-0.19928874E-03	-0.19926082E-03	-0.19923187E-03	-0.19920184E-03	-0.19917081E-03
EOFT	0.34909872E-02	0.34907680E-02	0.34905376E-02	0.34902959E-02	0.34900423E-02	0.34897768E-02
SBL	0.12573432E 06	0.12573293E 06	0.12573147E 06	0.12572994E 06	0.12572832E 06	0.12572663E 06
SBLH	0.12592534E 06	0.12592519E 06	0.12592503E 06	0.12592486E 06	0.12592468E 06	0.12592449E 06
SFD	0.32987864E 06	0.32986766E 06	0.32985613E 06	0.32984396E 06	0.32983123E 06	0.32981782E 06
EDL	0.22812795E-01	0.22811908E-01	0.22810980E-01	0.22809996E-01	0.22808970E-01	0.22807890E-01
EDLH	0.22829577E-01	0.22830214E-01	0.22830881E-01	0.22831593E-01	0.22832327E-01	0.22833106E-01
EFD	0.26603116E-01	0.26602231E-01	0.26601301E-01	0.26600320E-01	0.26599292E-01	0.26598212E-01

SAMPLE CASE NO. 2, TITANIUM METAL-SHELL

114

DESIGN DATA FOR BALANCED IN PLANE WRAP CONTOUR

CONTOUR INPUT DATA ABIG = 0.239793 C = 0.000004 V LEN = 16.681069

	31	32	33	34	35	36
Z	0.94162993E 00	0.93751337E 00	0.93323861E 00	0.92880300E 00	0.92420375E 00	0.91943783E 00
U	0.29999996E 00	0.30999996E 00	0.31999996E 00	0.32999995E 00	0.33999995E 00	0.34999995E 00
PHI	0.68009756E 02	0.67240973E 02	0.66468340E 02	0.65691669E 02	0.64910770E 02	0.64125445E 02
ALPHA	0.14127415E 02	0.14176014E 02	0.14226972E 02	0.14280380E 02	0.14336345E 02	0.14394974E 02
THETA	0.85618294E 02	0.85452019E 02	0.85283438E 02	0.85112416E 02	0.84938808E 02	0.84762466E 02
R ONE	0.80570998E 01	0.80621815E 01	0.80675180E 01	0.80731206E 01	0.80790013E 01	0.80851734E 01
R TWO	0.10155109E 02	0.10166715E 02	0.10178866E 02	0.10191582E 02	0.10204885E 02	0.10218797E 02
T	0.22652014E-01	0.22756344E-01	0.22865726E-01	0.22980366E-01	0.23100480E-01	0.23226308E-01
X	0.94162992E 01	0.93751336E 01	0.93323860E 01	0.92880300E 01	0.92420375E 01	0.91943783E 01
Y	0.29999996E 01	0.30999996E 01	0.31999995E 01	0.32999995E 01	0.33999995E 01	0.34999995E 01
XFO	0.94268012E 01	0.93856258E 01	0.93428681E 01	0.92985015E 01	0.92524979E 01	0.92048272E 01
YFO	0.30042406E 01	0.31044013E 01	0.32045642E 01	0.33047294E 01	0.34048971E 01	0.35050675E 01
XFI	0.94057971E 01	0.93646413E 01	0.93219038E 01	0.92775584E 01	0.92315770E 01	0.91839292E 01
YFI	0.29957586E 01	0.30955978E 01	0.31954349E 01	0.32952696E 01	0.33951018E 01	0.34949315E 01
XM	0.93157799E 01	0.92751200E 01	0.92328970E 01	0.91890852E 01	0.91436567E 01	0.90965813E 01
YM	0.29594070E 01	0.30580418E 01	0.31566751E 01	0.32553069E 01	0.33539371E 01	0.34525655E 01
SOL	-0.28543808E 03	-0.30681778E 03	-0.32920454E 03	-0.35263548E 03	-0.37715110E 03	-0.40279508E 03
SOLH	0.44827176E 04	0.44790377E 04	0.44751501E 04	0.44710434E 04	0.44667048E 04	0.44621212E 04
SOF	0.47000000E 05	0.47000000E 05	0.47000000E 05	0.47000000E 05	0.47000000E 05	0.47000000E 05
EOL	0.00000000E-38	0.00000000E-38	0.00000000E-38	0.00000000E-38	0.00000000E-38	0.00000000E-38
EOLH	0.00000000E-38	0.00000000E-38	0.00000000E-38	0.00000000E-38	0.00000000E-38	0.00000000E-38
EOF	0.37903226E-02	0.37903226E-02	0.37903226E-02	0.37903226E-02	0.37903226E-02	0.37903226E-02
SOLP	-0.63900185E 04	-0.64161694E 04	-0.64435473E 04	-0.64721971E 04	-0.65021666E 04	-0.65335093E 04
SOLHP	-0.40478424E 03	-0.40935965E 03	-0.41419254E 03	-0.41929710E 03	-0.42468900E 03	-0.43038524E 03
SOFP	0.43269786E 05	0.43266180E 05	0.43262411E 05	0.43258471E 05	0.43254355E 05	0.43250060E 05
EOLP	-0.30082370E-03	-0.30111448E-03	-0.30141849E-03	-0.30173620E-03	-0.30206802E-03	-0.30241450E-03
EOLHP	-0.19913875E-03	-0.19910572E-03	-0.19907170E-03	-0.19903676E-03	-0.19900091E-03	-0.19896424E-03
EOFP	0.34894988E-02	0.34892081E-02	0.34889041E-02	0.34885864E-02	0.34882545E-02	0.34879080E-02
SOLT	-0.63900185E 04	-0.64161694E 04	-0.64435473E 04	-0.64721971E 04	-0.65021666E 04	-0.65335093E 04
SOLHT	-0.40478424E 03	-0.40935965E 03	-0.41419254E 03	-0.41929710E 03	-0.42468900E 03	-0.43038524E 03
SOFT	0.43269786E 05	0.43266180E 05	0.43262411E 05	0.43258471E 05	0.43254355E 05	0.43250060E 05
EOLT	-0.30082370E-03	-0.30111448E-03	-0.30141849E-03	-0.30173620E-03	-0.30206802E-03	-0.30241450E-03
EOLHT	-0.19913875E-03	-0.19910572E-03	-0.19907170E-03	-0.19903676E-03	-0.19900091E-03	-0.19896424E-03
EOFT	0.34894988E-02	0.34892081E-02	0.34889041E-02	0.34885864E-02	0.34882545E-02	0.34879080E-02
SBL	0.12572485E 06	0.12572299E 06	0.12572104E 06	0.12571900E 06	0.12571686E 06	0.12571462E 06
SBLH	0.12592428E 06	0.12592407E 06	0.12592384E 06	0.12592360E 06	0.12592334E 06	0.12592308E 06
SFD	0.32980379E 06	0.32978906E 06	0.32977363E 06	0.32975749E 06	0.32974061E 06	0.32972287E 06
EDL	0.22806757E-01	0.22805570E-01	0.22804325E-01	0.22803026E-01	0.22801665E-01	0.22800236E-01
EDLH	0.22833915E-01	0.22834767E-01	0.22835655E-01	0.22836584E-01	0.22837549E-01	0.22838577E-01
EFD	0.26597080E-01	0.26595892E-01	0.26594647E-01	0.26593346E-01	0.26591985E-01	0.26590554E-01

SAMPLE CASE NO. 2, TITANIUM METAL-SHELL

115

DESIGN DATA FOR BALANCED IN PLANE WRAP CONTOUR

CONTOUR INPUT DATA ABIG = 0.239793 C = 0.000004 V LEN = 16.681069

	37	38	39	40	41	42
Z	0.91450209E 00	0.90939318E 00	0.90410750E 00	0.89864126E 00	0.89299043E 00	0.88715070E 00
U	0.35999995E 00	0.36999995E 00	0.37999994E 00	0.38999994E 00	0.39999994E 00	0.40999994E 00
PHI	0.63335483E 02	0.62540668E 02	0.61740771E 02	0.60935555E 02	0.60124770E 02	0.59308153E 02
ALPHA	0.14456388E 02	0.14520715E 02	0.14588094E 02	0.14658675E 02	0.14732623E 02	0.14810111E 02
THETA	0.84583228E 02	0.84400920E 02	0.84215360E 02	0.84026351E 02	0.83833682E 02	0.83637129E 02
R ONE	0.80916505E 01	0.80984479E 01	0.81055824E 01	0.81130716E 01	0.81209348E 01	0.81291934E 01
R TWO	0.10233344E 02	0.10248552E 02	0.10264450E 02	0.10281070E 02	0.10298444E 02	0.10316609E 02
T	0.23358105E-01	0.23496144E-01	0.23640727E-01	0.23792174E-01	0.23950837E-01	0.24117093E-01
X	0.91450208E 01	0.90939317E 01	0.90410749E 01	0.89864125E 01	0.89299042E 01	0.88715070E 01
Y	0.35999995E 01	0.36999995E 01	0.37999994E 01	0.38999994E 01	0.39999994E 01	0.40999994E 01
XFO	0.91554577E 01	0.91043562E 01	0.90514864E 01	0.89968106E 01	0.89402882E 01	0.88818765E 01
YFO	0.36052406E 01	0.37054167E 01	0.38055959E 01	0.39057784E 01	0.40059645E 01	0.41061543E 01
XFI	0.91345838E 01	0.90835071E 01	0.90306633E 01	0.89760144E 01	0.89195201E 01	0.88611375E 01
YFI	0.35947583E 01	0.36945822E 01	0.37944029E 01	0.38942204E 01	0.39940342E 01	0.40938444E 01
XM	0.90478283E 01	0.89973643E 01	0.89451538E 01	0.88911593E 01	0.88353409E 01	0.87776561E 01
YM	0.35511921E 01	0.36498167E 01	0.37484392E 01	0.38470595E 01	0.39456774E 01	0.40442927E 01
SOL	-0.42961351E 03	-0.45765609E 03	-0.48697713E 03	-0.51763424E 03	-0.54969002E 03	-0.58321215E 03
SOLH	0.44572768E 04	0.44521553E 04	0.44467390E 04	0.44410078E 04	0.44349400E 04	0.44285118E 04
SOF	0.47000000E 05	0.47000000E 05	0.47000000E 05	0.47000000E 05	0.47000000E 05	0.47000000E 05
EOL	0.00000000E-38	0.00000000E-38	0.00000000E-38	0.00000000E-38	0.00000000E-38	0.00000000E-38
EOLH	0.00000000E-38	0.00000000E-38	0.00000000E-38	0.00000000E-38	0.00000000E-38	0.00000000E-38
EOF	0.37903226E-02	0.37903226E-02	0.37903226E-02	0.37903226E-02	0.37903226E-02	0.37903226E-02
SOLP	-0.65662803E 04	-0.66005395E 04	-0.66363519E 04	-0.66737872E 04	-0.67129207E 04	-0.67538330E 04
SOLHP	-0.43640436E 03	-0.44276671E 03	-0.44949448E 03	-0.45661210E 03	-0.46414639E 03	-0.47212677E 03
SOFP	0.43245575E 05	0.43240895E 05	0.43236011E 05	0.43230916E 05	0.43225600E 05	0.43220053E 05
EOLP	-0.30277617E-03	-0.30315363E-03	-0.30354747E-03	-0.30395839E-03	-0.30438710E-03	-0.30483435E-03
EOLHP	-0.19892674E-03	-0.19888848E-03	-0.19884954E-03	-0.19880998E-03	-0.19876989E-03	-0.19872938E-03
EOFP	0.34875464E-02	0.34871689E-02	0.34867751E-02	0.34863642E-02	0.34859354E-02	0.34854882E-02
SOLT	-0.65662803E 04	-0.66005395E 04	-0.66363519E 04	-0.66737872E 04	-0.67129207E 04	-0.67538330E 04
SOLHT	-0.43640436E 03	-0.44276671E 03	-0.44949448E 03	-0.45661210E 03	-0.46414639E 03	-0.47212677E 03
SOFT	0.43245575E 05	0.43240895E 05	0.43236011E 05	0.43230916E 05	0.43225600E 05	0.43220053E 05
EOLT	-0.30277617E-03	-0.30315363E-03	-0.30354747E-03	-0.30395839E-03	-0.30438710E-03	-0.30483435E-03
EOLHT	-0.19892674E-03	-0.19888848E-03	-0.19884954E-03	-0.19880998E-03	-0.19876989E-03	-0.19872938E-03
EOFT	0.34875464E-02	0.34871689E-02	0.34867751E-02	0.34863642E-02	0.34859354E-02	0.34854882E-02
SBL	0.12571227E 06	0.12570982E 06	0.12570725E 06	0.12570456E 06	0.12570174E 06	0.12569880E 06
SBLH	0.12592279E 06	0.12592249E 06	0.12592217E 06	0.12592183E 06	0.12592147E 06	0.12592108E 06
SFD	0.32970432E 06	0.32968494E 06	0.32966462E 06	0.32964339E 06	0.32962114E 06	0.32959788E 06
EDL	0.22798736E-01	0.22797174E-01	0.22795535E-01	0.22793822E-01	0.22792028E-01	0.22790154E-01
EDLH	0.22839642E-01	0.22840750E-01	0.22841916E-01	0.22843130E-01	0.22844397E-01	0.22845719E-01
EFD	0.26589058E-01	0.26587495E-01	0.26585856E-01	0.26584144E-01	0.26582350E-01	0.26580474E-01

SAMPLE CASE NO. 2, TITANIUM METAL-SHELL

116

DESIGN DATA FOR BALANCED IN PLANE WRAP CONTOUR

CONTOUR INPUT DATA ABIG = 0.239793 C = 0.000004 V LEN = 16.681069

	43	44	45	46	47	48
Z	0.88111750E 00	0.87488595E 00	0.86845081E 00	0.86180654E 00	0.85494716E 00	0.84786629E 00
U	0.41999993E 00	0.42999993E 00	0.43999993E 00	0.44999993E 00	0.45999993E 00	0.46999992E 00
PHI	0.58485429E 02	0.57656307E 02	0.56820480E 02	0.55977625E 02	0.55127400E 02	0.54269440E 02
ALPHA	0.14891335E 02	0.14976501E 02	0.15065837E 02	0.15159593E 02	0.15258039E 02	0.15361475E 02
THETA	0.83436446E 02	0.83231372E 02	0.83021624E 02	0.82806892E 02	0.82586846E 02	0.82361120E 02
R ONE	0.81378703E 01	0.81469907E 01	0.81565819E 01	0.81666741E 01	0.81773002E 01	0.81884966E 01
R TWO	0.10335603E 02	0.10355470E 02	0.10376255E 02	0.10398007E 02	0.10420781E 02	0.10444636E 02
T	0.24291357E-01	0.24474078E-01	0.24665747E-01	0.24866899E-01	0.25078122E-01	0.25300059E-01
X	0.88111750E 01	0.87488594E 01	0.86845081E 01	0.86180654E 01	0.85494716E 01	0.84786628E 01
Y	0.41999993E 01	0.42999993E 01	0.43999993E 01	0.44999993E 01	0.45999992E 01	0.46999992E 01
XFO	0.88215292E 01	0.87591978E 01	0.86948302E 01	0.86283704E 01	0.85597589E 01	0.84889318E 01
YFO	0.42063481E 01	0.43065460E 01	0.44067486E 01	0.45069560E 01	0.46071685E 01	0.47073865E 01
XFI	0.88008207E 01	0.87385209E 01	0.86741859E 01	0.86077602E 01	0.85391842E 01	0.84683938E 01
YFI	0.41936505E 01	0.42934525E 01	0.43932499E 01	0.44930425E 01	0.45928299E 01	0.46926119E 01
XM	0.87180593E 01	0.86565024E 01	0.85929339E 01	0.85272985E 01	0.84595373E 01	0.83895870E 01
YM	0.41429054E 01	0.42415150E 01	0.43401214E 01	0.44387246E 01	0.45373241E 01	0.46359196E 01
SOL	-0.61827388E 03	-0.65495391E 03	-0.69333819E 03	-0.73352028E 03	-0.77560114E 03	-0.81969212E 03
SOLH	0.44216969E 04	0.44144658E 04	0.44067864E 04	0.43986227E 04	0.43899345E 04	0.43806773E 04
SOF	0.47000000E 05	0.47000000E 05	0.47000000E 05	0.47000000E 05	0.47000000E 05	0.47000000E 05
EOL	0.00000000E-38	0.00000000E-38	0.00000000E-38	0.00000000E-38	0.00000000E-38	0.00000000E-38
EOLH	0.00000000E-38	0.00000000E-38	0.00000000E-38	0.00000000E-38	0.00000000E-38	0.00000000E-38
EOF	0.37903226E-02	0.37903226E-02	0.37903226E-02	0.37903226E-02	0.37903226E-02	0.37903226E-02
SOLP	-0.67966125E 04	-0.68413538E 04	-0.68881601E 04	-0.69371431E 04	-0.69884240E 04	-0.70421359E 04
SOLHP	-0.48058593E 03	-0.48955975E 03	-0.49908812E 03	-0.50921533E 03	-0.51999060E 03	-0.53146906E 03
SOFP	0.43214267E 05	0.43208229E 05	0.43201929E 05	0.43195352E 05	0.43188483E 05	0.43181311E 05
EOLP	-0.30530097E-03	-0.30578789E-03	-0.30629606E-03	-0.30682649E-03	-0.30738032E-03	-0.30795874E-03
EOLHP	-0.19868857E-03	-0.19864758E-03	-0.19860658E-03	-0.19856576E-03	-0.19852531E-03	-0.19848551E-03
EOFP	0.34850215E-02	0.34845346E-02	0.34840265E-02	0.34834961E-02	0.34829422E-02	0.34823638E-02
SOLT	-0.67966125E 04	-0.68413538E 04	-0.68881601E 04	-0.69371431E 04	-0.69884240E 04	-0.70421359E 04
SOLHT	-0.48058593E 03	-0.48955975E 03	-0.49908812E 03	-0.50921533E 03	-0.51999060E 03	-0.53146906E 03
SOFT	0.43214267E 05	0.43208229E 05	0.43201929E 05	0.43195352E 05	0.43188483E 05	0.43181311E 05
EOLT	-0.30530097E-03	-0.30578789E-03	-0.30629606E-03	-0.30682649E-03	-0.30738032E-03	-0.30795874E-03
EOLHT	-0.19868857E-03	-0.19864758E-03	-0.19860658E-03	-0.19856576E-03	-0.19852531E-03	-0.19848551E-03
EOFT	0.34850215E-02	0.34845346E-02	0.34840265E-02	0.34834961E-02	0.34829422E-02	0.34823638E-02
SBL	0.12569571E 06	0.12569248E 06	0.12568910E 06	0.12568555E 06	0.12568183E 06	0.12567793E 06
SBLH	0.12592068E 06	0.12592024E 06	0.12591978E 06	0.12591929E 06	0.12591876E 06	0.12591819E 06
SFD	0.32957350E 06	0.32954798E 06	0.32952128E 06	0.32949329E 06	0.32946397E 06	0.32943317E 06
EDL	0.22788183E-01	0.22786130E-01	0.22783976E-01	0.22781718E-01	0.22779351E-01	0.22776871E-01
EDLH	0.22847111E-01	0.22848557E-01	0.22850071E-01	0.22851654E-01	0.22853308E-01	0.22855040E-01
EFD	0.26578508E-01	0.26576450E-01	0.26574297E-01	0.26572039E-01	0.26569675E-01	0.26567191E-01

SAMPLE CASE NO. 2, TITANIUM METAL-SHELL

117

DESIGN DATA FOR BALANCED IN PLANE WRAP CONTOUR

CONTOUR INPUT DATA ABIG = 0.239793 C = 0.000004 V LEN = 16.681069

	49	50	51	52	53	54
Z	0.84055708E 00	0.83301219E 00	0.82522368E 00	0.81718303E 00	0.80888099E 00	0.80030759E 00
U	0.47999992E 00	0.48999992E 00	0.49999992E 00	0.50999991E 00	0.51999990E 00	0.52999989E 00
PHI	0.53403359E 02	0.52528748E 02	0.51645166E 02	0.50752148E 02	0.49849191E 02	0.48935759E 02
ALPHA	0.15470230E 02	0.15584660E 02	0.15705169E 02	0.15832195E 02	0.15966228E 02	0.16107816E 02
THETA	0.82129318E 02	0.81891008E 02	0.81645713E 02	0.81392910E 02	0.81132020E 02	0.80862405E 02
R ONE	0.82003036E 01	0.82127651E 01	0.82259306E 01	0.82398545E 01	0.82545978E 01	0.82702283E 01
R TWO	0.10469636E 02	0.10495852E 02	0.10523360E 02	0.10552246E 02	0.10582603E 02	0.10614534E 02
T	0.25533421E-01	0.25778987E-01	0.26037623E-01	0.26310286E-01	0.26598041E-01	0.26902079E-01
X	0.84055707E 01	0.83301218E 01	0.82522367E 01	0.81718302E 01	0.80888098E 01	0.80030758E 01
Y	0.47999992E 01	0.48999992E 01	0.49999992E 01	0.50999991E 01	0.51999990E 01	0.52999989E 01
XFO	0.84158205E 01	0.83403516E 01	0.82624458E 01	0.81820177E 01	0.80989749E 01	0.80132174E 01
YFO	0.48076104E 01	0.49078407E 01	0.50080777E 01	0.51083220E 01	0.52085742E 01	0.53088349E 01
XFI	0.83953209E 01	0.83198918E 01	0.82420275E 01	0.81616426E 01	0.80786446E 01	0.79929341E 01
YFI	0.47923879E 01	0.48921577E 01	0.49919206E 01	0.50916761E 01	0.51914237E 01	0.52911628E 01
XM	0.83173801E 01	0.82428435E 01	0.81658990E 01	0.80864623E 01	0.80044416E 01	0.79197384E 01
YM	0.47345110E 01	0.48330978E 01	0.49316795E 01	0.50302559E 01	0.51288263E 01	0.52273905E 01
SOL	-0.86591334E 03	-0.91439722E 03	-0.96528869E 03	-0.10187471E 04	-0.10749483E 04	-0.11340865E 04
SOLH	0.43708011E 04	0.43602496E 04	0.43489596E 04	0.43368593E 04	0.43238678E 04	0.43098918E 04
SOF	0.47000000E 05	0.47000000E 05	0.47000000E 05	0.47000000E 05	0.47000000E 05	0.47000000E 05
EOL	0.00000000E-38	0.00000000E-38	0.00000000E-38	0.00000000E-38	0.00000000E-38	0.00000000E-38
EOLH	0.00000000E-38	0.00000000E-38	0.00000000E-38	0.00000000E-38	0.00000000E-38	0.00000000E-38
EOF	0.37903226E-02	0.37903226E-02	0.37903226E-02	0.37903226E-02	0.37903226E-02	0.37903226E-02
SOLP	-0.70984232E 04	-0.71574443E 04	-0.72193719E 04	-0.72843973E 04	-0.73527301E 04	-0.74246022E 04
SOLHP	-0.54371229E 03	-0.55678931E 03	-0.57077816E 03	-0.58576686E 03	-0.60185525E 03	-0.61915720E 03
SOFP	0.43173817E 05	0.43165984E 05	0.43157791E 05	0.43149219E 05	0.43140244E 05	0.43130843E 05
EOLP	-0.30856312E-03	-0.30919488E-03	-0.30985552E-03	-0.31054680E-03	-0.31127055E-03	-0.31202879E-03
EOLHP	-0.19844664E-03	-0.19840903E-03	-0.19837311E-03	-0.19833931E-03	-0.19830822E-03	-0.19828044E-03
EOFP	0.34817594E-02	0.34811277E-02	0.34804670E-02	0.34797757E-02	0.34790519E-02	0.34782937E-02
SOLT	-0.70984232E 04	-0.71574443E 04	-0.72193719E 04	-0.72843973E 04	-0.73527301E 04	-0.74246022E 04
SOLHT	-0.54371229E 03	-0.55678931E 03	-0.57077816E 03	-0.58576686E 03	-0.60185525E 03	-0.61915720E 03
SOFT	0.43173817E 05	0.43165984E 05	0.43157791E 05	0.43149219E 05	0.43140244E 05	0.43130843E 05
EOLT	-0.30856312E-03	-0.30919488E-03	-0.30985552E-03	-0.31054680E-03	-0.31127055E-03	-0.31202879E-03
EOLHT	-0.19844664E-03	-0.19840903E-03	-0.19837311E-03	-0.19833931E-03	-0.19830822E-03	-0.19828044E-03
EOFT	0.34817594E-02	0.34811277E-02	0.34804670E-02	0.34797757E-02	0.34790519E-02	0.34782937E-02
SBL	0.12567384E 06	0.12566953E 06	0.12566501E 06	0.12566025E 06	0.12565524E 06	0.12564995E 06
SBLH	0.12591759E 06	0.12591695E 06	0.12591625E 06	0.12591550E 06	0.12591470E 06	0.12591383E 06
SFD	0.32940088E 06	0.32936698E 06	0.32933137E 06	0.32929394E 06	0.32925454E 06	0.32921305E 06
EDL	0.22774267E-01	0.22771529E-01	0.22768662E-01	0.22765639E-01	0.22762462E-01	0.22759116E-01
EDLH	0.22856856E-01	0.22858756E-01	0.22860741E-01	0.22862829E-01	0.22865019E-01	0.22867307E-01
EFD	0.26564587E-01	0.26561853E-01	0.26558982E-01	0.26555963E-01	0.26552786E-01	0.26549439E-01

DESIGN DATA FOR BALANCED IN PLANE WRAP CONTOUR

CONTOUR INPUT DATA ABIG = 0.239793 C = 0.000004 V LEN = 16.681069

	55	56	57	58	59	60
Z	0.79145202E 00	0.78230248E 00	0.77284614E 00	0.76306897E 00	0.75295557E 00	0.74248901E 00
U	0.53999988E 00	0.54999987E 00	0.55999986E 00	0.56999985E 00	0.57999984E 00	0.58999983E 00
PHI	0.48011273E 02	0.47075110E 02	0.46126597E 02	0.45165002E 02	0.44189534E 02	0.43199326E 02
ALPHA	0.16257566E 02	0.16416163E 02	0.16584377E 02	0.16763075E 02	0.16953246E 02	0.17156014E 02
THETA	0.80583353E 02	0.80294070E 02	0.79993671E 02	0.79681157E 02	0.79355400E 02	0.79015123E 02
R ONE	0.82868232E 01	0.83044677E 01	0.83232601E 01	0.83433110E 01	0.83647468E 01	0.83877126E 01
R TWO	0.10648154E 02	0.10683588E 02	0.10720979E 02	0.10760484E 02	0.10802280E 02	0.10846566E 02
T	0.27223728E-01	0.27564483E-01	0.27926030E-01	0.28310279E-01	0.28719402E-01	0.29155884E-01
X	0.79145202E 01	0.78230247E 01	0.77284614E 01	0.76306896E 01	0.75295557E 01	0.74248901E 01
Y	0.53999988E 01	0.54999987E 01	0.55999986E 01	0.56999985E 01	0.57999984E 01	0.58999983E 01
XFO	0.79246376E 01	0.78331167E 01	0.77385269E 01	0.76407276E 01	0.75395648E 01	0.74348692E 01
YFO	0.54091049E 01	0.55093849E 01	0.56096759E 01	0.57099788E 01	0.58102948E 01	0.59106253E 01
XFI	0.79044028E 01	0.78129327E 01	0.77183958E 01	0.76206516E 01	0.75195464E 01	0.74149109E 01
YFI	0.53908926E 01	0.54906124E 01	0.55903212E 01	0.56900181E 01	0.57897019E 01	0.58893713E 01
XM	0.78322455E 01	0.77418462E 01	0.76484135E 01	0.75518083E 01	0.74518784E 01	0.73484559E 01
YM	0.53259476E 01	0.54244971E 01	0.55230383E 01	0.56215702E 01	0.57200919E 01	0.58186022E 01
SOL	-0.11963763E 04	-0.12620571E 04	-0.13313947E 04	-0.14046872E 04	-0.14822688E 04	-0.15645165E 04
SOLH	0.42948265E 04	0.42785494E 04	0.42609206E 04	0.42417772E 04	0.42209293E 04	0.41981539E 04
SOF	0.47000000E 05	0.47000000E 05	0.47000000E 05	0.47000000E 05	0.47000000E 05	0.47000000E 05
EOL	0.00000000E-38	0.00000000E-38	0.00000000E-38	0.00000000E-38	0.00000000E-38	0.00000000E-38
EOLH	0.00000000E-38	0.00000000E-38	0.00000000E-38	0.00000000E-38	0.00000000E-38	0.00000000E-38
EOF	0.37903226E-02	0.37903226E-02	0.37903226E-02	0.37903226E-02	0.37903226E-02	0.37903226E-02
SOLP	-0.75002698E 04	-0.75800181E 04	-0.76641644E 04	-0.77530634E 04	-0.78471129E 04	-0.79467610E 04
SOLHP	-0.63780257E 03	-0.65794089E 03	-0.67974437E 03	-0.70341287E 03	-0.72917946E 03	-0.75731736E 03
SOFP	0.43120985E 05	0.43110642E 05	0.43099781E 05	0.43088363E 05	0.43076350E 05	0.43063695E 05
EOLP	-0.31282373E-03	-0.31365782E-03	-0.31453378E-03	-0.31545452E-03	-0.31642335E-03	-0.31744390E-03
EOLHP	-0.19825680E-03	-0.19823818E-03	-0.19822567E-03	-0.19822058E-03	-0.19822450E-03	-0.19823930E-03
EOFP	0.34774988E-02	0.34766647E-02	0.34757887E-02	0.34748680E-02	0.34738992E-02	0.34728786E-02
SOLT	-0.75002698E 04	-0.75800181E 04	-0.76641644E 04	-0.77530634E 04	-0.78471129E 04	-0.79467610E 04
SOLHT	-0.63780257E 03	-0.65794089E 03	-0.67974437E 03	-0.70341287E 03	-0.72917946E 03	-0.75731736E 03
SOFT	0.43120985E 05	0.43110642E 05	0.43099781E 05	0.43088363E 05	0.43076350E 05	0.43063695E 05
EOLT	-0.31282373E-03	-0.31365782E-03	-0.31453378E-03	-0.31545452E-03	-0.31642335E-03	-0.31744390E-03
EOLHT	-0.19825680E-03	-0.19823818E-03	-0.19822567E-03	-0.19822058E-03	-0.19822450E-03	-0.19823930E-03
EOFT	0.34774988E-02	0.34766647E-02	0.34757887E-02	0.34748680E-02	0.34738992E-02	0.34728786E-02
SBL	0.12564438E 06	0.12563849E 06	0.12563226E 06	0.12562566E 06	0.12561865E 06	0.12561121E 06
SBLH	0.12591289E 06	0.12591186E 06	0.12591075E 06	0.12590954E 06	0.12590821E 06	0.12590675E 06
SFD	0.32916930E 06	0.32912313E 06	0.32907433E 06	0.32902273E 06	0.32896804E 06	0.32891001E 06
EDL	0.22755590E-01	0.22751864E-01	0.22747929E-01	0.22743770E-01	0.22739357E-01	0.22734678E-01
EDLH	0.22869725E-01	0.22872257E-01	0.22874924E-01	0.22877730E-01	0.22880692E-01	0.22883815E-01
EFD	0.26545911E-01	0.26542188E-01	0.26538252E-01	0.26534091E-01	0.26529681E-01	0.26525001E-01

251

SAMPLE CASE NO. 2, TITANIUM METAL-SHELL

119

DESIGN DATA FOR BALANCED IN PLANE WRAP CONTOUR

CONTOUR INPUT DATA ABIG = 0.239793 C = 0.000004 V LEN = 16.681069

	61	62	63	64	65	66
Z	0.73165061E 00	0.72041966E 00	0.70877313E 00	0.69668525E 00	0.68412712E 00	0.67106608E 00
U	0.59999982E 00	0.60999981E 00	0.61999980E 00	0.62999979E 00	0.63999978E 00	0.64999977E 00
PHI	0.42193432E 02	0.41170814E 02	0.40130327E 02	0.39070706E 02	0.37990546E 02	0.36888279E 02
ALPHA	0.17372668E 02	0.17604694E 02	0.17853811E 02	0.18122029E 02	0.18411705E 02	0.18725632E 02
THETA	0.78658870E 02	0.78284966E 02	0.77891485E 02	0.77476190E 02	0.77036464E 02	0.76569222E 02
R ONE	0.84123758E 01	0.84389309E 01	0.84676045E 01	0.84986635E 01	0.85324242E 01	0.85692645E 01
R TWO	0.10893567E 02	0.10943539E 02	0.10996774E 02	0.11053605E 02	0.11114417E 02	0.11179656E 02
T	0.29622580E-01	0.30122790E-01	0.30660356E-01	0.31239778E-01	0.31866363E-01	0.32546430E-01
X	0.73165060E 01	0.72041966E 01	0.70877312E 01	0.69668524E 01	0.68412712E 01	0.67106608E 01
Y	0.59999982E 01	0.60999981E 01	0.61999980E 01	0.62999979E 01	0.63999978E 01	0.64999977E 01
XFO	0.73264538E 01	0.72141116E 01	0.70976120E 01	0.69766973E 01	0.68510786E 01	0.67204289E 01
YFO	0.60109716E 01	0.61113356E 01	0.62117192E 01	0.63121247E 01	0.64125549E 01	0.65130131E 01
XFI	0.73065582E 01	0.71942815E 01	0.70778505E 01	0.69570075E 01	0.68314638E 01	0.67008927E 01
YFI	0.59890248E 01	0.60886606E 01	0.61882768E 01	0.62878711E 01	0.63874407E 01	0.64869823E 01
XM	0.72413558E 01	0.71303732E 01	0.70152797E 01	0.68958201E 01	0.67717081E 01	0.66426198E 01
YM	0.59171000E 01	0.60155836E 01	0.61140513E 01	0.62125012E 01	0.63109307E 01	0.64093369E 01
SOL	-0.16518561E 04	-0.17447713E 04	-0.18438153E 04	-0.19496223E 04	-0.20629229E 04	-0.21845670E 04
SOLH	0.41731880E 04	0.41457190E 04	0.41153724E 04	0.40816964E 04	0.40441397E 04	0.40020258E 04
SOF	0.47000000E 05	0.47000000E 05	0.47000000E 05	0.47000000E 05	0.47000000E 05	0.47000000E 05
EOL	0.00000000E-38	0.00000000E-38	0.00000000E-38	0.00000000E-38	0.00000000E-38	0.00000000E-38
EOLH	0.00000000E-38	0.00000000E-38	0.00000000E-38	0.00000000E-38	0.00000000E-38	0.00000000E-38
EOF	0.37903226E-02	0.37903226E-02	0.37903226E-02	0.37903226E-02	0.37903226E-02	0.37903226E-02
SOLP	-0.80525141E 04	-0.81649469E 04	-0.82847152E 04	-0.84125717E 04	-0.85493822E 04	-0.86961526E 04
SOLHP	-0.78814897E 03	-0.82205753E 03	-0.85950159E 03	-0.90103457E 03	-0.94733019E 03	-0.99921672E 03
SOFP	0.43050349E 05	0.43036254E 05	0.43021350E 05	0.43005564E 05	0.42988818E 05	0.42971024E 05
EOLP	-0.31852023E-03	-0.31965687E-03	-0.32085884E-03	-0.32213185E-03	-0.32348229E-03	-0.32491735E-03
EOLHP	-0.19826727E-03	-0.19831127E-03	-0.19837474E-03	-0.19846199E-03	-0.19857835E-03	-0.19873063E-03
EOFP	0.34718023E-02	0.34706657E-02	0.34694637E-02	0.34681907E-02	0.34668402E-02	0.34654052E-02
SOLT	-0.80525141E 04	-0.81649469E 04	-0.82847152E 04	-0.84125717E 04	-0.85493822E 04	-0.86961526E 04
SOLHT	-0.78814897E 03	-0.82205753E 03	-0.85950159E 03	-0.90103457E 03	-0.94733019E 03	-0.99921672E 03
SOFT	0.43050349E 05	0.43036254E 05	0.43021350E 05	0.43005564E 05	0.42988818E 05	0.42971024E 05
EOLT	-0.31852023E-03	-0.31965687E-03	-0.32085884E-03	-0.32213185E-03	-0.32348229E-03	-0.32491735E-03
EOLHT	-0.19826727E-03	-0.19831127E-03	-0.19837474E-03	-0.19846199E-03	-0.19857835E-03	-0.19873063E-03
EOFT	0.34718023E-02	0.34706657E-02	0.34694637E-02	0.34681907E-02	0.34668402E-02	0.34654052E-02
SBL	0.12560328E 06	0.12559482E 06	0.12558578E 06	0.12557608E 06	0.12556565E 06	0.12555441E 06
SBLH	0.12590514E 06	0.12590336E 06	0.12590138E 06	0.12589917E 06	0.12589669E 06	0.12589388E 06
SFD	0.32884834E 06	0.32878270E 06	0.32871268E 06	0.32863778E 06	0.32855760E 06	0.32847141E 06
EDL	0.22729707E-01	0.22724412E-01	0.22718767E-01	0.22712725E-01	0.22706258E-01	0.22699310E-01
EDLH	0.22887111E-01	0.22890597E-01	0.22894289E-01	0.22898207E-01	0.22902352E-01	0.22906760E-01
EFD	0.26520027E-01	0.26514734E-01	0.26509087E-01	0.26503047E-01	0.26496581E-01	0.26489630E-01

255

SAMPLE CASE NO. 2, TITANIUM METAL-SHELL

120

DESIGN DATA FOR BALANCED IN PLANE WRAP CONTOUR

CONTOUR INPUT DATA ABIG = 0.239793 C = 0.000004 V LEN = 16.681069

	67	68	69	70	71	72
Z	0.65746503E 00	0.64328156E 00	0.62846685E 00	0.61296418E 00	0.59670715E 00	0.57961715E 00
U	0.65999977E 00	0.66999976E 00	0.67999975E 00	0.68999974E 00	0.69999973E 00	0.70999972E 00
PHI	0.35762147E 02	0.34610168E 02	0.33430095E 02	0.32219365E 02	0.30975034E 02	0.29693694E 02
ALPHA	0.19067142E 02	0.19440254E 02	0.19849860E 02	0.20301990E 02	0.20804173E 02	0.21365955E 02
THETA	0.76070804E 02	0.75536813E 02	0.74961922E 02	0.74339596E 02	0.73661716E 02	0.72918036E 02
R ONE	0.86096412E 01	0.86541096E 01	0.87033578E 01	0.87582438E 01	0.88198599E 01	0.88896164E 01
R TWO	0.11249843E 02	0.11325586E 02	0.11407609E 02	0.11496770E 02	0.11594103E 02	0.11700859E 02
T	0.33287569E-01	0.34098987E-01	0.34991980E-01	0.35980592E-01	0.37082531E-01	0.38320507E-01
X	0.65746503E 01	0.64328156E 01	0.62846685E 01	0.61296417E 01	0.59670715E 01	0.57961715E 01
Y	0.65999976E 01	0.66999975E 01	0.67999974E 01	0.68999974E 01	0.69999973E 01	0.70999972E 01
XFO	0.65843772E 01	0.64424995E 01	0.62943074E 01	0.61392334E 01	0.59766140E 01	0.58056628E 01
YFO	0.66135032E 01	0.67140298E 01	0.68145989E 01	0.69152173E 01	0.70158944E 01	0.71166414E 01
XFI	0.65649233E 01	0.64231316E 01	0.62750296E 01	0.61200500E 01	0.59575289E 01	0.57866802E 01
YFI	0.65864920E 01	0.66859652E 01	0.67853960E 01	0.68847773E 01	0.69841001E 01	0.70833529E 01
XM	0.65081877E 01	0.63679912E 01	0.62215464E 01	0.60682906E 01	0.59075653E 01	0.57385904E 01
YM	0.65077164E 01	0.66060649E 01	0.67043771E 01	0.68026463E 01	0.69008645E 01	0.69990208E 01
SOL	-0.23155455E 04	-0.24570243E 04	-0.26103837E 04	-0.27772722E 04	-0.29596739E 04	-0.31600018E 04
SOLH	0.39545136E 04	0.39005432E 04	0.38387670E 04	0.37674386E 04	0.36842634E 04	0.35861634E 04
SOF	0.47000000E 05	0.47000000E 05	0.47000000E 05	0.47000000E 05	0.47000000E 05	0.47000000E 05
EOL	0.00000000E-38	0.00000000E-38	0.00000000E-38	0.00000000E-38	0.00000000E-38	0.00000000E-38
EOLH	0.00000000E-38	0.00000000E-38	0.00000000E-38	0.00000000E-38	0.00000000E-38	0.00000000E-38
EOF	0.37903226E-02	0.37903226E-02	0.37903226E-02	0.37903226E-02	0.37903226E-02	0.37903226E-02
SOLP	-0.88540551E 04	-0.90244684E 04	-0.92090222E 04	-0.94096630E 04	-0.96287312E 04	-0.98690708E 04
SOLHP	-0.10577227E 04	-0.11241419E 04	-0.12001218E 04	-0.12877927E 04	-0.13899552E 04	-0.15103621E 04
SOFP	0.42952079E 05	0.42931870E 05	0.42910267E 05	0.42887122E 05	0.42862270E 05	0.42835525E 05
EOLP	-0.32644515E-03	-0.32807496E-03	-0.32981717E-03	-0.33168370E-03	-0.33368792E-03	-0.33584477E-03
EOLHP	-0.19892748E-03	-0.19917994E-03	-0.19950260E-03	-0.19991458E-03	-0.20044172E-03	-0.20111936E-03
EOFP	0.34638773E-02	0.34622476E-02	0.34605054E-02	0.34586389E-02	0.34566346E-02	0.34544778E-02
SOLT	-0.88540551E 04	-0.90244684E 04	-0.92090222E 04	-0.94096630E 04	-0.96287312E 04	-0.98690708E 04
SOLHT	-0.10577227E 04	-0.11241419E 04	-0.12001218E 04	-0.12877927E 04	-0.13899552E 04	-0.15103621E 04
SOFT	0.42952079E 05	0.42931870E 05	0.42910267E 05	0.42887122E 05	0.42862270E 05	0.42835525E 05
EOLT	-0.32644515E-03	-0.32807496E-03	-0.32981717E-03	-0.33168370E-03	-0.33368792E-03	-0.33584477E-03
EOLHT	-0.19892748E-03	-0.19917994E-03	-0.19950260E-03	-0.19991458E-03	-0.20044172E-03	-0.20111936E-03
EOFT	0.34638773E-02	0.34622476E-02	0.34605054E-02	0.34586389E-02	0.34566346E-02	0.34544778E-02
SBL	0.12554226E 06	0.12552904E 06	0.12551464E 06	0.12549885E 06	0.12548145E 06	0.12546214E 06
SBLH	0.12589071E 06	0.12588705E 06	0.12588286E 06	0.12587795E 06	0.12587218E 06	0.12586529E 06
SFD	0.32837854E 06	0.32827816E 06	0.32816924E 06	0.32805062E 06	0.32792089E 06	0.32777821E 06
EDL	0.22691819E-01	0.22683724E-01	0.22674940E-01	0.22665375E-01	0.22654912E-01	0.22643409E-01
EDLH	0.22911466E-01	0.22916453E-01	0.22921793E-01	0.22927473E-01	0.22933536E-01	0.22939984E-01
EFD	0.26482140E-01	0.26474045E-01	0.26465261E-01	0.26455695E-01	0.26445233E-01	0.26433727E-01

256

SAMPLE CASE NO. 2, TITANIUM METAL-SHELL

(121)

DESIGN DATA FOR BALANCED IN PLANE WRAP CONTOUR

CONTOUR INPUT DATA ABIG = 0.239793 C = 0.000004 V LEN = 16.681069

	73	74	75	76	77	78
Z	0.56160006E 00	0.54254171E 00	0.52230149E 00	0.50070307E 00	0.47752083E 00	0.45245877E 00
U	0.71999971E 00	0.72999970E 00	0.73999969E 00	0.74999968E 00	0.75999967E 00	0.76999966E 00
PHI	0.28371372E 02	0.27003393E 02	0.25584215E 02	0.24107203E 02	0.22564364E 02	0.20946045E 02
ALPHA	0.21999650E 02	0.22721456E 02	0.23553195E 02	0.24525083E 02	0.25680380E 02	0.27083619E 02
THETA	0.72095406E 02	0.71176604E 02	0.70138556E 02	0.68949464E 02	0.67564039E 02	0.65915072E 02
R ONE	0.89693762E 01	0.90616567E 01	0.91699635E 01	0.92993537E 01	0.94574523E 01	0.96564348E 01
R TWO	0.11818569E 02	0.11949123E 02	0.12094872E 02	0.12258761E 02	0.12444483E 02	0.12656596E 02
T	0.39724200E-01	0.41333279E-01	0.43202186E-01	0.45408040E-01	0.48064392E-01	0.51346737E-01
X	0.56160006E 01	0.54254171E 01	0.52230148E 01	0.50070307E 01	0.47752083E 01	0.45245877E 01
Y	0.71999971E 01	0.72999970E 01	0.73999969E 01	0.74999968E 01	0.75999967E 01	0.76999966E 01
XFO	0.56254387E 01	0.54348006E 01	0.52323430E 01	0.50163040E 01	0.47844299E 01	0.45337656E 01
YFO	0.72174734E 01	0.73184105E 01	0.74194800E 01	0.75207206E 01	0.76221892E 01	0.77239734E 01
XFI	0.56065624E 01	0.54160336E 01	0.52136866E 01	0.49977574E 01	0.47659866E 01	0.45154097E 01
YFI	0.71825206E 01	0.72815834E 01	0.73805137E 01	0.74792729E 01	0.75778041E 01	0.76760197E 01
XM	0.55604315E 01	0.53719550E 01	0.51717639E 01	0.49581055E 01	0.47287350E 01	0.44807047E 01
YM	0.70971013E 01	0.71950871E 01	0.72929522E 01	0.73906599E 01	0.74881557E 01	0.75853550E 01
SOL	-0.33812152E 04	-0.36269806E 04	-0.39018846E 04	-0.42117078E 04	-0.45637589E 04	-0.49671951E 04
SOLH	0.34689225E 04	0.33266129E 04	0.31506526E 04	0.29281653E 04	0.26389811E 04	0.22497781E 04
SOF	0.47000000E 05	0.47000000E 05	0.47000000E 05	0.47000000E 05	0.47000000E 05	0.47000000E 05
EOL	0.00000000E-38	0.00000000E-38	0.00000000E-38	0.00000000E-38	0.00000000E-38	0.00000000E-38
EOLH	0.00000000E-38	0.00000000E-38	0.00000000E-38	0.00000000E-38	0.00000000E-38	0.00000000E-38
EOF	0.37903226E-02	0.37903226E-02	0.37903226E-02	0.37903226E-02	0.37903226E-02	0.37903226E-02
SOLP	-0.10134169E 05	-0.10428345E 05	-0.10757004E 05	-0.11126966E 05	-0.11546871E 05	-0.12027606E 05
SOLHP	-0.16541537E 04	-0.18285508E 04	-0.20440060E 04	-0.23161978E 04	-0.26696805E 04	-0.31450272E 04
SOFP	0.42806682E 05	0.42775526E 05	0.42741843E 05	0.42705463E 05	0.42666353E 05	0.42624845E 05
EOLP	-0.33817072E-03	-0.34068332E-03	-0.34339971E-03	-0.34633360E-03	-0.34948753E-03	-0.35283502E-03
EOLHP	-0.20199709E-03	-0.20314587E-03	-0.20467086E-03	-0.20673303E-03	-0.20958991E-03	-0.21367640E-03
EOFP	0.34521518E-02	0.34496392E-02	0.34469228E-02	0.34439890E-02	0.34408349E-02	0.34374875E-02
SOLT	-0.10134169E 05	-0.10428345E 05	-0.10757004E 05	-0.11126966E 05	-0.11546871E 05	-0.12027606E 05
SOLHT	-0.16541537E 04	-0.18285508E 04	-0.20440060E 04	-0.23161978E 04	-0.26696805E 04	-0.31450272E 04
SOFT	0.42806682E 05	0.42775526E 05	0.42741843E 05	0.42705463E 05	0.42666353E 05	0.42624845E 05
EOLT	-0.33817072E-03	-0.34068332E-03	-0.34339971E-03	-0.34633360E-03	-0.34948753E-03	-0.35283502E-03
EOLHT	-0.20199709E-03	-0.20314587E-03	-0.20467086E-03	-0.20673303E-03	-0.20958991E-03	-0.21367640E-03
EOFT	0.34521518E-02	0.34496392E-02	0.34469228E-02	0.34439890E-02	0.34408349E-02	0.34374875E-02
SBL	0.12544057E 06	0.12541625E 06	0.12538854E 06	0.12535656E 06	0.12531904E 06	0.12527406E 06
SBLH	0.12585698E 06	0.12584674E 06	0.12583388E 06	0.12581735E 06	0.12579540E 06	0.12576505E 06
SFD	0.32762041E 06	0.32744477E 06	0.32724773E 06	0.32702474E 06	0.32676988E 06	0.32647511E 06
EDL	0.22630679E-01	0.22616514E-01	0.22600625E-01	0.22582642E-01	0.22562093E-01	0.22538319E-01
EDLH	0.22946854E-01	0.22954089E-01	0.22961631E-01	0.22969323E-01	0.22976733E-01	0.22982990E-01
EFD	0.26421000E-01	0.26406836E-01	0.26390946E-01	0.26372963E-01	0.26352410E-01	0.26328638E-01

251

DESIGN DATA FOR BALANCED IN PLANE WRAP CONTOUR

CONTOUR INPUT DATA ABIG = 0.239793 C = 0.000004 V LEN = 16.681069

	79	80	81	82	83	84
Z	0.42511728E 00	0.41042548E 00	0.39493755E 00	0.37854350E 00	0.36110826E 00	0.34246480E 00
U	0.77999965E 00	0.78499963E 00	0.78999963E 00	0.79499962E 00	0.79999962E 00	0.80499961E 00
PHI	0.19240702E 02	0.18351305E 02	0.17435159E 02	0.16490753E 02	0.15517161E 02	0.14514925E 02
ALPHA	0.28836152E 02	0.29892388E 02	0.31108183E 02	0.32527352E 02	0.34212379E 02	0.36255861E 02
THETA	0.63897563E 02	0.62700080E 02	0.61336110E 02	0.59760769E 02	0.57910216E 02	0.55690073E 02
R ONE	0.99172846E 01	0.10082170E 02	0.10280267E 02	0.10524509E 02	0.10836250E 02	0.11253878E 02
R TWO	0.12900429E 02	0.13035904E 02	0.13181009E 02	0.13335546E 02	0.13498017E 02	0.13664043E 02
T	0.55543737E-01	0.58131878E-01	0.61171476E-01	0.64809157E-01	0.69267216E-01	0.74901632E-01
X	0.42511727E 01	0.41042548E 01	0.39493755E 01	0.37854350E 01	0.36110826E 01	0.34246480E 01
Y	0.77999965E 01	0.78499963E 01	0.78999962E 01	0.79499962E 01	0.79999961E 01	0.80499960E 01
XFO	0.42603245E 01	0.41134059E 01	0.39585398E 01	0.37946333E 01	0.36203480E 01	0.34340343E 01
YFO	0.78262171E 01	0.78775840E 01	0.79291767E 01	0.79810678E 01	0.80333673E 01	0.80862514E 01
XFI	0.42420208E 01	0.40951036E 01	0.39402112E 01	0.37762366E 01	0.36018172E 01	0.34152616E 01
YFI	0.77737759E 01	0.78224085E 01	0.78708156E 01	0.79189245E 01	0.79666249E 01	0.80137405E 01
XM	0.42100294E 01	0.40645387E 01	0.39111235E 01	0.37486794E 01	0.35758457E 01	0.33909302E 01
YM	0.76821185E 01	0.77302656E 01	0.77781959E 01	0.78258379E 01	0.78730834E 01	0.79197591E 01
SOL	-0.54329979E 04	-0.56929018E 04	-0.59723149E 04	-0.62713132E 04	-0.65877127E 04	-0.69142087E 04
SOLH	0.17016522E 04	0.13360954E 04	0.88076830E 03	0.30022853E 03	-0.46156255E 03	-0.14981644E 04
SOF	0.47000000E 05	0.47000000E 05	0.47000000E 05	0.47000000E 05	0.47000000E 05	0.47000000E 05
EOL	0.00000000E-38	0.00000000E-38	0.00000000E-38	0.00000000E-38	0.00000000E-38	0.00000000E-38
EOLH	0.00000000E-38	0.00000000E-38	0.00000000E-38	0.00000000E-38	0.00000000E-38	0.00000000E-38
EOF	0.37903226E-02	0.37903226E-02	0.37903226E-02	0.37903226E-02	0.37903226E-02	0.37903226E-02
SOLP	-0.12582388E 05	-0.12892017E 05	-0.13225162E 05	-0.13582279E 05	-0.13961468E 05	-0.14355405E 05
SOLHP	-0.38140047E 04	-0.42600083E 04	-0.48155043E 04	-0.55238755E 04	-0.64538945E 04	-0.77208173E 04
SOFP	0.42582183E 05	0.42561388E 05	0.42542042E 05	0.42525716E 05	0.42515186E 05	0.42515588E 05
EOLP	-0.35627556E-03	-0.35795256E-03	-0.35951271E-03	-0.36082937E-03	-0.36167854E-03	-0.36164603E-03
EOLHP	-0.21977979E-03	-0.22402352E-03	-0.22946339E-03	-0.23660446E-03	-0.24626284E-03	-0.25983871E-03
EOFP	0.34340470E-02	0.34323700E-02	0.34308098E-02	0.34294932E-02	0.34286440E-02	0.34286765E-02
SOLT	-0.12582388E 05	-0.12892017E 05	-0.13225162E 05	-0.13582279E 05	-0.13961468E 05	-0.14355405E 05
SOLHT	-0.38140047E 04	-0.42600083E 04	-0.48155043E 04	-0.55238755E 04	-0.64538945E 04	-0.77208173E 04
SOFT	0.42582183E 05	0.42561388E 05	0.42542042E 05	0.42525716E 05	0.42515186E 05	0.42515588E 05
EOLT	-0.35627556E-03	-0.35795256E-03	-0.35951271E-03	-0.36082937E-03	-0.36167854E-03	-0.36164603E-03
EOLHT	-0.21977979E-03	-0.22402352E-03	-0.22946339E-03	-0.23660446E-03	-0.24626284E-03	-0.25983871E-03
EOFT	0.34340470E-02	0.34323700E-02	0.34308098E-02	0.34294932E-02	0.34286440E-02	0.34286765E-02
SBL	0.12521856E 06	0.12518531E 06	0.12514704E 06	0.12510213E 06	0.12504793E 06	0.12497973E 06
SBLH	0.12572082E 06	0.12569034E 06	0.12565124E 06	0.12559957E 06	0.12552843E 06	0.12542499E 06
SFD	0.32612967E 06	0.32593359E 06	0.32571938E 06	0.32548511E 06	0.32522985E 06	0.32495583E 06
EDL	0.22510459E-01	0.22494648E-01	0.22477371E-01	0.22458480E-01	0.22437891E-01	0.22415796E-01
EDLH	0.22986033E-01	0.22984964E-01	0.22980635E-01	0.22970833E-01	0.22951319E-01	0.22913338E-01
EFD	0.26300780E-01	0.26284966E-01	0.26267692E-01	0.26248799E-01	0.26228213E-01	0.26206115E-01

20

SAMPLE CASE NO. 2, TITANIUM METAL-SHELL

123

DESIGN DATA FOR BALANCED IN PLANE WRAP CONTOUR

CONTOUR INPUT DATA ABIG = 0.239793 C = 0.000004 V LEN = 16.681069

	85	86	87	88	89	90
Z	0.32240655E 00	0.30068339E 00	0.27701824E 00	0.25121500E 00	0.22863656E 00	0.19999708E 00
U	0.80999961E 00	0.81499960E 00	0.81999960E 00	0.82499959E 00	0.82910978E 00	0.83402526E 00
PHI	0.13488114E 02	0.12449429E 02	0.11434576E 02	0.10551132E 02	0.10183886E 02	0.90819637E 01
ALPHA	0.38801729E 02	0.42087676E 02	0.46538936E 02	0.53007672E 02	0.61202287E 02	0.90000031E 02
THETA	0.52953987E 02	0.49460756E 02	0.44779525E 02	0.38047157E 02	0.29589829E 02	0.00000000E-38
R ONE	0.11855034E 02	0.12826687E 02	0.14769870E 02	0.21262558E 02	0.12931356E 02	0.12670299E 02
R TWO	0.13822741E 02	0.13947793E 02	0.13973262E 02	0.13719134E 02	0.12931356E 02	0.12670299E 02
T	0.82324672E-01	0.92696976E-01	0.10855248E 00	0.13684144E 00	0.18780614E 00	0.18780614E 00
X	0.32240655E 01	0.30068339E 01	0.27701824E 01	0.25121500E 01	0.22863655E 01	0.19999708E 01
Y	0.80999960E 01	0.81499959E 01	0.81999959E 01	0.82499958E 01	0.82910978E 01	0.83402525E 01
XFO	0.32336664E 01	0.30168256E 01	0.27809426E 01	0.25246787E 01	0.23029683E 01	0.20147932E 01
YFO	0.81400229E 01	0.81952546E 01	0.82531948E 01	0.83172597E 01	0.83835213E 01	0.84329783E 01
XFI	0.32144646E 01	0.29968422E 01	0.27594222E 01	0.24996213E 01	0.22697627E 01	0.19851485E 01
YFI	0.80599689E 01	0.81047372E 01	0.81467968E 01	0.81827319E 01	0.81986741E 01	0.82475266E 01
XM	0.31918214E 01	0.29759139E 01	0.27401762E 01	0.24818447E 01	0.22525982E 01	0.19698247E 01
YM	0.79655666E 01	0.80099399E 01	0.80516437E 01	0.80872934E 01	0.81031235E 01	0.81516637E 01
SOL	-0.72317316E 04	-0.74929385E 04	-0.75772054E 04	-0.71513540E 04	-0.57248143E 04	0.83038383E 04
SOLH	-0.29770170E 04	-0.52267714E 04	-0.89823378E 04	-0.16262572E 05	-0.38517081E 05	-0.73749476E 12
SOF	0.47000000E 05	0.47000000E 05	0.47000000E 05	0.47000000E 05	0.47000000E 05	0.47000000E 05
EOL	0.00000000E-38	0.00000000E-38	0.00000000E-38	0.00000000E-38	0.00000000E-38	0.00000000E-38
EOLH	0.00000000E-38	0.00000000E-38	0.00000000E-38	0.00000000E-38	0.00000000E-38	0.00000000E-38
EOF	0.37903226E-02	0.37903226E-02	0.37903226E-02	0.37903226E-02	0.37903226E-02	0.37903226E-02
SOLP	-0.14744193E 05	-0.15077566E 05	-0.15226350E 05	-0.14832727E 05	-0.12764441E 05	-0.14400371E 02
SOLHP	-0.95321060E 04	-0.12298641E 05	-0.16953302E 05	-0.26134016E 05	-0.42238576E 05	-0.21617446E 11
SOFP	0.42537031E 05	0.42601259E 05	0.42761831E 05	0.43184561E 05	0.42246571E 05	0.16603870E 11
EOLP	-0.35991675E-03	-0.35473718E-03	-0.34178776E-03	-0.30769661E-03	-0.38334103E-03	-0.13624762E 05
EOLHP	-0.27992987E-03	-0.31189705E-03	-0.36867526E-03	-0.49067345E-03	-0.10611644E-03	0.46185633E 05
EOFP	0.34304057E-02	0.34355854E-02	0.34485347E-02	0.34826259E-02	0.34069815E-02	0.13390218E 04
SOLT	-0.14744193E 05	-0.15077566E 05	-0.15226350E 05	-0.14832727E 05	-0.12764441E 05	-0.14400371E 02
SOLHT	-0.95321060E 04	-0.12298641E 05	-0.16953302E 05	-0.26134016E 05	-0.42238576E 05	-0.21617446E 11
SOFT	0.42537031E 05	0.42601259E 05	0.42761831E 05	0.43184561E 05	0.42246571E 05	0.16603870E 11
EOLT	-0.35991675E-03	-0.35473718E-03	-0.34178776E-03	-0.30769661E-03	-0.38334103E-03	-0.13624762E 05
EOLHT	-0.27992987E-03	-0.31189705E-03	-0.36867526E-03	-0.49067345E-03	-0.10611644E-03	0.46185633E 05
EOFT	0.34304057E-02	0.34355854E-02	0.34485347E-02	0.34826259E-02	0.34069815E-02	0.13390218E 04
SBL	0.12488789E 06	0.12474740E 06	0.12446352E 06	0.12304106E 06	0.11183752E 06	0.21784999E 06
SBLH	0.12526227E 06	0.12497127E 06	0.12430310E 06	0.12084630E 06	-0.14280482E 06	0.32710796E 12
SFD	0.32467586E 06	0.32444240E 06	0.32450891E 06	0.32784654E 06	0.36499004E 06	-0.25124404E 12
EDL	0.22393215E-01	0.22374388E-01	0.22379751E-01	0.22648914E-01	0.25644369E-01	-0.24668741E 06
EDLH	0.22836569E-01	0.22662716E-01	0.22154864E-01	0.18727152E-01	-0.17159715E-01	0.51288301E 06
EFD	0.26183537E-01	0.26164709E-01	0.26170073E-01	0.26439236E-01	0.29434680E-01	-0.20261616E 05

HEAD PROPERTIES

ARC LENGTH = 0.14815267E 02

SURFACE AREA = 0.57581123E 03

CONTAINED VOLUME = 0.17618785E 04

WT. OF LINER = 0.86683311E 01

WT. OF FILAMENTS = 0.13863431E 01

WT. OF HEAD = 0.10054674E 02

SAMPLE CASE NO. 2, TITANIUM METAL-SHELL

125

DESIGN DATA FOR BALANCED IN PLANE WRAP CONTOUR

CONTOUR INPUT DATA ABIG = 0.239793 C = 0.000004 V LEN = 16.681069

	1	2	3	4	5	6
Z	0.10000000E 01	0.99993741E 00	0.99974963E 00	0.99943659E 00	0.99899814E 00	0.99843407E 00
U	0.00000000E-38	0.10000000E-01	0.20000000E-01	0.30000000E-01	0.40000000E-01	0.49999999E-01
PHI	0.90000243E 02	0.89282980E 02	0.88565825E 02	0.87848472E 02	0.87130816E 02	0.86412756E 02
ALPHA	0.13484512E 02	0.13485161E 02	0.13487102E 02	0.13490339E 02	0.13494874E 02	0.13500715E 02
THETA	0.89999812E 02	0.89862412E 02	0.89724959E 02	0.89587402E 02	0.89449688E 02	0.89311761E 02
R ONE	0.79906446E 01	0.79907106E 01	0.79909090E 01	0.79912397E 01	0.79917033E 01	0.79923003E 01
R TWO	0.10000000E 02	0.10000157E 02	0.10000629E 02	0.10001417E 02	0.10002520E 02	0.10003942E 02
T	0.21271081E-01	0.21272470E-01	0.21276639E-01	0.21283591E-01	0.21293337E-01	0.21305888E-01
X	0.10000000E 02	0.99993740E 01	0.99974962E 01	0.99943658E 01	0.99899813E 01	0.99843407E 01
Y	0.00000000E-38	0.10000000E 00	0.20000000E 00	0.30000000E 00	0.39999999E 00	0.49999999E 00
XFO	0.10001679E 02	0.10010009E 02	0.10008131E 02	0.10005000E 02	0.10000615E 02	0.99949727E 01
YFO	0.10502209E-01	0.10013311E 00	0.20026626E 00	0.30039952E 00	0.40053293E 00	0.50066653E 00
XFI	0.99983212E 01	0.99887385E 01	0.99868612E 01	0.99837315E 01	0.99793479E 01	0.99737085E 01
YFI	-0.10502209E-01	0.99866891E-01	0.19973373E 00	0.29960047E 00	0.39946706E 00	0.49933345E 00
XM	0.99829973E 01	0.98916662E 01	0.98898116E 01	0.98867199E 01	0.98823897E 01	0.98768188E 01
YM	-0.10636517E 00	0.98651973E-01	0.19730392E 00	0.29595580E 00	0.39460759E 00	0.49325926E 00
SOL	0.00000000E-38	-0.28955890E 00	-0.11578450E 01	-0.26062254E 01	-0.46361651E 01	-0.72501056E 01
SOLH	0.45289000E 04	0.45288558E 04	0.45287234E 04	0.45285023E 04	0.45281923E 04	0.45277925E 04
SOF	0.47000000E 05	0.47000000E 05	0.47000000E 05	0.47000000E 05	0.47000000E 05	0.47000000E 05
EOL	0.00000000E-38	0.00000000E-38	0.00000000E-38	0.00000000E-38	0.00000000E-38	0.00000000E-38
EOLH	0.00000000E-38	0.00000000E-38	0.00000000E-38	0.00000000E-38	0.00000000E-38	0.00000000E-38
EOF	0.37903226E-02	0.37903226E-02	0.37903226E-02	0.37903226E-02	0.37903226E-02	0.37903226E-02
SOLP	-0.60404303E 04	-0.60407850E 04	-0.60418497E 04	-0.60436255E 04	-0.60461144E 04	-0.60493194E 04
SOLHP	-0.34731642E 03	-0.34737151E 03	-0.34753656E 03	-0.34781192E 03	-0.34819804E 03	-0.34869573E 03
SOFP	0.43318442E 05	0.43318393E 05	0.43318243E 05	0.43317995E 05	0.43317645E 05	0.43317196E 05
EOLP	-0.29689977E-03	-0.29690377E-03	-0.29691581E-03	-0.29693590E-03	-0.29696407E-03	-0.29700033E-03
EOLHP	-0.19963157E-03	-0.19963104E-03	-0.19962941E-03	-0.19962668E-03	-0.19962285E-03	-0.19961792E-03
EOFP	0.34934228E-02	0.34934187E-02	0.34934067E-02	0.34933866E-02	0.34933585E-02	0.34933222E-02
SOLT	-0.60404303E 04	-0.60407850E 04	-0.60418497E 04	-0.60436255E 04	-0.60461144E 04	-0.60493194E 04
SOLHT	-0.34731642E 03	-0.34737151E 03	-0.34753656E 03	-0.34781192E 03	-0.34819804E 03	-0.34869573E 03
SOFT	0.43318442E 05	0.43318393E 05	0.43318243E 05	0.43317995E 05	0.43317645E 05	0.43317196E 05
EOLT	-0.29689977E-03	-0.29690377E-03	-0.29691581E-03	-0.29693590E-03	-0.29696407E-03	-0.29700033E-03
EOLHT	-0.19963157E-03	-0.19963104E-03	-0.19962941E-03	-0.19962668E-03	-0.19962285E-03	-0.19961792E-03
EOFT	0.34934228E-02	0.34934187E-02	0.34934067E-02	0.34933866E-02	0.34933585E-02	0.34933222E-02
SBL	0.12574960E 06	0.12574958E 06	0.12574950E 06	0.12574938E 06	0.12574920E 06	0.12574897E 06
SBLH	0.12592693E 06	0.12592693E 06	0.12592693E 06	0.12592692E 06	0.12592690E 06	0.12592687E 06
SFD	0.32999954E 06	0.32999933E 06	0.32999870E 06	0.32999769E 06	0.32999629E 06	0.32999449E 06
EDL	0.22822546E-01	0.22822527E-01	0.22822477E-01	0.22822397E-01	0.22822280E-01	0.22822139E-01
EDLH	0.22822531E-01	0.22822544E-01	0.22822587E-01	0.22822644E-01	0.22822728E-01	0.22822826E-01
EFD	0.26612866E-01	0.26612849E-01	0.26612798E-01	0.26612717E-01	0.26612604E-01	0.26612459E-01

76-1

DESIGN DATA FOR BALANCED IN PLANE WRAP CONTOUR

CONTOUR INPUT DATA ABTG = 0.239793 C = 0.000004 V LEN = 16.681069

	7	8	9	10	11	12
Z	0.99774416E 00	0.99692806E 00	0.99598540E 00	0.99491577E 00	0.99371864E 00	0.99239347E 00
U	0.59999999E-01	0.69999998E-01	0.79999998E-01	0.89999998E-01	0.99999998E-01	0.11000000E 00
PHI	0.85694193E 02	0.84975020E 02	0.84255139E 02	0.83534444E 02	0.82812828E 02	0.82090187E 02
ALPHA	0.13507868E 02	0.13516343E 02	0.13526150E 02	0.13537302E 02	0.13549814E 02	0.13563701E 02
THETA	0.89173572E 02	0.89035064E 02	0.88896182E 02	0.88756873E 02	0.88617080E 02	0.88476744E 02
R ONE	0.79930321E 01	0.79938991E 01	0.79949030E 01	0.79960449E 01	0.79973264E 01	0.79987499E 01
R TWO	0.10005683E 02	0.10007745E 02	0.10010130E 02	0.10012843E 02	0.10015884E 02	0.10019259E 02
T	0.21321260E-01	0.21339472E-01	0.21360548E-01	0.21384515E-01	0.21411403E-01	0.21441247E-01
X	0.99774415E 01	0.99692805E 01	0.99598540E 01	0.99491576E 01	0.99371864E 01	0.99239347E 01
Y	0.59999999E 00	0.69999998E 00	0.79999998E 00	0.89999998E 00	0.99999998E 00	0.11000000E 01
XFO	0.99880720E 01	0.99799092E 01	0.99704806E 01	0.99597818E 01	0.99478079E 01	0.99345533E 01
YFO	0.60080039E 00	0.70093454E 00	0.80106907E 00	0.90120399E 00	0.10013394E 01	0.11014753E 01
XFI	0.99668109E 01	0.99586517E 01	0.99492273E 01	0.99385333E 01	0.99265647E 01	0.99133160E 01
YFI	0.59919958E 00	0.69906541E 00	0.79893089E 00	0.89879595E 00	0.99866056E 00	0.10985246E 01
XM	0.98700050E 01	0.98619448E 01	0.98526349E 01	0.98420707E 01	0.98302475E 01	0.98171597E 01
YM	0.59191078E 00	0.69056211E 00	0.78921325E 00	0.88786412E 00	0.98651473E 00	0.10851650E 01
SOL	-0.10450879E 02	-0.14242489E 02	-0.18629136E 02	-0.23616385E 02	-0.29209901E 02	-0.35416423E 02
SOLH	0.45273028E 04	0.45267215E 04	0.45260479E 04	0.45252808E 04	0.45244182E 04	0.45234590E 04
SOF	0.47000000E 05	0.47000000E 05	0.47000000E 05	0.47000000E 05	0.47000000E 05	0.47000000E 05
EOL	0.00000000E-38	0.00000000E-38	0.00000000E-38	0.00000000E-38	0.00000000E-38	0.00000000E-38
EOLH	0.00000000E-38	0.00000000E-38	0.00000000E-38	0.00000000E-38	0.00000000E-38	0.00000000E-38
EOF	0.37903226E-02	0.37903226E-02	0.37903226E-02	0.37903226E-02	0.37903226E-02	0.37903226E-02
SOLP	-0.60532438E 04	-0.60578926E 04	-0.60632709E 04	-0.60693851E 04	-0.60762425E 04	-0.60838511E 04
SOLHP	-0.34930585E 03	-0.35002960E 03	-0.35086834E 03	-0.35182370E 03	-0.35289750E 03	-0.35409185E 03
SOFP	0.43316645E 05	0.43315992E 05	0.43315238E 05	0.43314381E 05	0.43313420E 05	0.43312354E 05
EOLP	-0.29704473E-03	-0.29709732E-03	-0.29715816E-03	-0.29722728E-03	-0.29730480E-03	-0.29739078E-03
EOLHP	-0.19961191E-03	-0.19960479E-03	-0.19959657E-03	-0.19958727E-03	-0.19957684E-03	-0.19956533E-03
EOFP	0.34932778E-02	0.34932252E-02	0.34931643E-02	0.34930952E-02	0.34930177E-02	0.34929317E-02
SOLT	-0.60532438E 04	-0.60578926E 04	-0.60632709E 04	-0.60693851E 04	-0.60762425E 04	-0.60838511E 04
SOLHT	-0.34930585E 03	-0.35002960E 03	-0.35086834E 03	-0.35182370E 03	-0.35289750E 03	-0.35409185E 03
SOFT	0.43316645E 05	0.43315992E 05	0.43315238E 05	0.43314381E 05	0.43313420E 05	0.43312354E 05
EOLT	-0.29704473E-03	-0.29709732E-03	-0.29715816E-03	-0.29722728E-03	-0.29730480E-03	-0.29739078E-03
EOLHT	-0.19961191E-03	-0.19960479E-03	-0.19959657E-03	-0.19958727E-03	-0.19957684E-03	-0.19956533E-03
EOFT	0.34932778E-02	0.34932252E-02	0.34931643E-02	0.34930952E-02	0.34930177E-02	0.34929317E-02
SBL	0.12574870E 06	0.12574837E 06	0.12574799E 06	0.12574756E 06	0.12574707E 06	0.12574654E 06
SBLH	0.12592685E 06	0.12592681E 06	0.12592678E 06	0.12592673E 06	0.12592668E 06	0.12592663E 06
SFD	0.32999229E 06	0.32998969E 06	0.32998670E 06	0.32998327E 06	0.32997948E 06	0.32997521E 06
EDL	0.22821960E-01	0.22821749E-01	0.22821509E-01	0.22821233E-01	0.22820925E-01	0.22820583E-01
EDLH	0.22822963E-01	0.22823110E-01	0.22823286E-01	0.22823487E-01	0.22823703E-01	0.22823954E-01
EFD	0.26612281E-01	0.26612072E-01	0.26611830E-01	0.26611554E-01	0.26611248E-01	0.26610904E-01

SAMPLE CASE NO. 2, TITANIUM METAL-SHELL

127

DESIGN DATA FOR BALANCED IN PLANE WRAP CONTOUR

CONTOUR INPUT DATA ABIG = 0.239793 C = 0.000004 V LEN 16.681069

	13	14	15	16	17	18
Z	0.99093964E 00	0.98935646E 00	0.98764318E 00	0.98579898E 00	0.98382296E 00	0.98171418E 00
U	0.12000000E 00	0.13000000E 00	0.14000000E 00	0.14999999E 00	0.15999999E 00	0.16999999E 00
PHI	0.81366413E 02	0.80641396E 02	0.79915027E 02	0.79187192E 02	0.78457778E 02	0.77726667E 02
ALPHA	0.13578983E 02	0.13595679E 02	0.13613812E 02	0.13633406E 02	0.13654487E 02	0.13677087E 02
THETA	0.88335807E 02	0.88194210E 02	0.88051891E 02	0.87908789E 02	0.87764836E 02	0.87619968E 02
R ONE	0.80003170E 01	0.80020300E 01	0.80038915E 01	0.80059044E 01	0.80080717E 01	0.80103968E 01
R TWO	0.10022972E 02	0.10027026E 02	0.10031427E 02	0.10036180E 02	0.10041290E 02	0.10046765E 02
T	0.21474087E-01	0.21509964E-01	0.21548928E-01	0.21591031E-01	0.21636329E-01	0.21684885E-01
X	0.99093963E 01	0.98935646E 01	0.98764318E 01	0.98579897E 01	0.98382295E 01	0.98171418E 01
Y	0.12000000E 01	0.13000000E 01	0.13999999E 01	0.14999999E 01	0.15999999E 01	0.16999999E 01
XFO	0.99200116E 01	0.99041764E 01	0.98870398E 01	0.98685935E 01	0.98488289E 01	0.98277364E 01
YFO	0.12016118E 01	0.13017489E 01	0.14018866E 01	0.15020252E 01	0.16021645E 01	0.17023047E 01
XFI	0.98987808E 01	0.98829527E 01	0.98658237E 01	0.98473858E 01	0.98276300E 01	0.98065470E 01
YFI	0.11983882E 01	0.12982510E 01	0.13981132E 01	0.14979747E 01	0.15978353E 01	0.16976950E 01
XM	0.98028009E 01	0.97871648E 01	0.97702438E 01	0.97520294E 01	0.97325133E 01	0.97116859E 01
YM	0.11838150E 01	0.12824645E 01	0.13811136E 01	0.14797623E 01	0.15784105E 01	0.16770581E 01
SOL	-0.42243567E 02	-0.49699245E 02	-0.57792929E 02	-0.66534678E 02	-0.75935332E 02	-0.86006318E 02
SOLH	0.45224013E 04	0.45212425E 04	0.45199805E 04	0.45186128E 04	0.45171364E 04	0.45155485E 04
SOF	0.47000000E 05	0.47000000E 05	0.47000000E 05	0.47000000E 05	0.47000000E 05	0.47000000E 05
EOL	0.00000000E-38	0.00000000E-38	0.00000000E-38	0.00000000E-38	0.00000000E-38	0.00000000E-38
EOLH	0.00000000E-38	0.00000000E-38	0.00000000E-38	0.00000000E-38	0.00000000E-38	0.00000000E-38
EOF	0.37903226E-02	0.37903226E-02	0.37903226E-02	0.37903226E-02	0.37903226E-02	0.37903226E-02
SOLP	-0.60922197E 04	-0.61013585E 04	-0.61112786E 04	-0.61219922E 04	-0.61335124E 04	-0.61458535E 04
SOLHP	-0.35540910E 03	-0.35685183E 03	-0.35842296E 03	-0.36012569E 03	-0.36196350E 03	-0.36394024E 03
SOFP	0.43311183E 05	0.43309902E 05	0.43308514E 05	0.43307016E 05	0.43305405E 05	0.43303681E 05
EOLP	-0.29748529E-03	-0.29758848E-03	-0.29770043E-03	-0.29782127E-03	-0.29795113E-03	-0.29809019E-03
EOLHP	-0.19955273E-03	-0.19953902E-03	-0.19952420E-03	-0.19950829E-03	-0.19949126E-03	-0.19947314E-03
EOFP	0.34928373E-02	0.34927340E-02	0.34926221E-02	0.34925013E-02	0.34923714E-02	0.34922323E-02
SOLT	-0.60922197E 04	-0.61013585E 04	-0.61112786E 04	-0.61219922E 04	-0.61335124E 04	-0.61458535E 04
SOLHT	-0.35540910E 03	-0.35685183E 03	-0.35842296E 03	-0.36012569E 03	-0.36196350E 03	-0.36394024E 03
SOFT	0.43311183E 05	0.43309902E 05	0.43308514E 05	0.43307016E 05	0.43305405E 05	0.43303681E 05
EOLT	-0.29748529E-03	-0.29758848E-03	-0.29770043E-03	-0.29782127E-03	-0.29795113E-03	-0.29809019E-03
EOLHT	-0.19955273E-03	-0.19953902E-03	-0.19952420E-03	-0.19950829E-03	-0.19949126E-03	-0.19947314E-03
EOFT	0.34928373E-02	0.34927340E-02	0.34926221E-02	0.34925013E-02	0.34923714E-02	0.34922323E-02
SBL	0.12574595E 06	0.12574530E 06	0.12574460E 06	0.12574385E 06	0.12574303E 06	0.12574216E 06
SBLH	0.12592657E 06	0.12592650E 06	0.12592643E 06	0.12592635E 06	0.12592627E 06	0.12592617E 06
SFD	0.32997053E 06	0.32996546E 06	0.32995992E 06	0.32995393E 06	0.32994750E 06	0.32994062E 06
EDL	0.22820205E-01	0.22819794E-01	0.22819349E-01	0.22818866E-01	0.22818349E-01	0.22817793E-01
EDLH	0.22824231E-01	0.22824529E-01	0.22824846E-01	0.22825197E-01	0.22825570E-01	0.22825971E-01
EFD	0.26610526E-01	0.26610117E-01	0.26609671E-01	0.26609188E-01	0.26608669E-01	0.26608115E-01

26

DESIGN DATA FOR BALANCED IN PLANE WRAP CONTOUR

CONTOUR INPUT DATA ABIG = 0.239793 C = 0.000004 V LEN = 16.681069

	19	20	21	22	23	24
Z	0.97947159E 00	0.97709407E 00	0.97458044E 00	0.97192940E 00	0.96913961E 00	0.96620958E 00
U	0.17999999E 00	0.18999998E 00	0.19999998E 00	0.20999998E 00	0.21999998E 00	0.22999998E 00
PHI	0.76993742E 02	0.76258881E 02	0.75521960E 02	0.74782851E 02	0.74041427E 02	0.73297550E 02
ALPHA	0.13701234E 02	0.13726965E 02	0.13754316E 02	0.13783327E 02	0.13814041E 02	0.13846504E 02
THETA	0.87474116E 02	0.87327209E 02	0.87179173E 02	0.87029932E 02	0.86879407E 02	0.86727516E 02
R ONE	0.80128833E 01	0.80155350E 01	0.80183562E 01	0.80213515E 01	0.80245259E 01	0.80278847E 01
R TWO	0.10052612E 02	0.10058837E 02	0.10065449E 02	0.10072456E 02	0.10079868E 02	0.10087695E 02
T	0.21736766E-01	0.21792045E-01	0.21850801E-01	0.21913121E-01	0.21979094E-01	0.22048820E-01
X	0.97947158E 01	0.97709407E 01	0.97458043E 01	0.97192940E 01	0.96913960E 01	0.96620958E 01
Y	0.17999999E 01	0.18999998E 01	0.19999998E 01	0.20999998E 01	0.21999998E 01	0.22999997E 01
XFO	0.98053052E 01	0.97815248E 01	0.97563827E 01	0.97298663E 01	0.97019620E 01	0.96726550E 01
YFO	0.18024459E 01	0.19025880E 01	0.20027313E 01	0.21028756E 01	0.22030213E 01	0.23031682E 01
XFI	0.97841262E 01	0.97603564E 01	0.97352258E 01	0.97087215E 01	0.96808299E 01	0.96515365E 01
YFI	0.17975538E 01	0.18974116E 01	0.19972684E 01	0.20971239E 01	0.21969783E 01	0.22968313E 01
XM	0.96895367E 01	0.96660550E 01	0.96412287E 01	0.96150453E 01	0.95874913E 01	0.95585523E 01
YM	0.17757052E 01	0.18743517E 01	0.19729975E 01	0.20716425E 01	0.21702868E 01	0.22689303E 01
SOL	-0.96761112E 02	-0.10821339E 03	-0.12037808E 03	-0.13327151E 03	-0.14691086E 03	-0.16131507E 03
SOLH	0.45138455E 04	0.45120237E 04	0.45100791E 04	0.45080075E 04	0.45058042E 04	0.45034639E 04
SOF	0.47000000E 05	0.47000000E 05	0.47000000E 05	0.47000000E 05	0.47000000E 05	0.47000000E 05
EOL	0.00000000E-38	0.00000000E-38	0.00000000E-38	0.00000000E-38	0.00000000E-38	0.00000000E-38
EOLH	0.00000000E-38	0.00000000E-38	0.00000000E-38	0.00000000E-38	0.00000000E-38	0.00000000E-38
EOF	0.37903226E-02	0.37903226E-02	0.37903226E-02	0.37903226E-02	0.37903226E-02	0.37903226E-02
SOLP	-0.61590310E 04	-0.61730620E 04	-0.61879642E 04	-0.62037574E 04	-0.62204626E 04	-0.62381024E 04
SOLHP	-0.36606007E 03	-0.36832757E 03	-0.37074768E 03	-0.37332577E 03	-0.37606768E 03	-0.37897977E 03
SOFP	0.43301841E 05	0.43299884E 05	0.43297806E 05	0.43295605E 05	0.43293280E 05	0.43290827E 05
EOLP	-0.29823856E-03	-0.29839644E-03	-0.29856401E-03	-0.29874146E-03	-0.29892900E-03	-0.29912686E-03
EOLHP	-0.19945393E-03	-0.19943360E-03	-0.19941218E-03	-0.19938967E-03	-0.19936607E-03	-0.19934138E-03
EOFP	0.34920840E-02	0.34919261E-02	0.34917585E-02	0.34915811E-02	0.34913936E-02	0.34911957E-02
SOLT	-0.61590310E 04	-0.61730620E 04	-0.61879642E 04	-0.62037574E 04	-0.62204626E 04	-0.62381024E 04
SOLHT	-0.36606007E 03	-0.36832757E 03	-0.37074768E 03	-0.37332577E 03	-0.37606768E 03	-0.37897977E 03
SOFT	0.43301841E 05	0.43299884E 05	0.43297806E 05	0.43295605E 05	0.43293280E 05	0.43290827E 05
EOLT	-0.29823856E-03	-0.29839644E-03	-0.29856401E-03	-0.29874146E-03	-0.29892900E-03	-0.29912686E-03
EOLHT	-0.19945393E-03	-0.19943360E-03	-0.19941218E-03	-0.19938967E-03	-0.19936607E-03	-0.19934138E-03
EOFT	0.34920840E-02	0.34919261E-02	0.34917585E-02	0.34915811E-02	0.34913936E-02	0.34911957E-02
SBL	0.12574123E 06	0.12574024E 06	0.12573919E 06	0.12573807E 06	0.12573689E 06	0.12573564E 06
SBLH	0.12592608E 06	0.12592598E 06	0.12592586E 06	0.12592574E 06	0.12592562E 06	0.12592549E 06
SFO	0.32993327E 06	0.32992542E 06	0.32991710E 06	0.32990827E 06	0.32989893E 06	0.32988905E 06
EDL	0.22817201E-01	0.22816567E-01	0.22815897E-01	0.22815183E-01	0.22814431E-01	0.22813634E-01
EDLH	0.22826399E-01	0.22826859E-01	0.22827341E-01	0.22827855E-01	0.22828398E-01	0.22828977E-01
EFO	0.26607521E-01	0.26606889E-01	0.26606217E-01	0.26605505E-01	0.26604752E-01	0.26603956E-01

96

SAMPLE CASE NO. 2, TITANIUM METAL-SHELL

129

DESIGN DATA FOR BALANCED IN PLANE WRAP CONTOUR

CONTOUR INPUT DATA ABIG = 0.239793 C = 0.000004 V LEN = 16.681069

	25	26	27	28	29	30
Z	0.96313779E 00	0.95992257E 00	0.95656219E 00	0.95305477E 00	0.94939834E 00	0.94559080E 00
U	0.23999997E 00	0.24999997E 00	0.25999997E 00	0.26999997E 00	0.27999996E 00	0.28999996E 00
PHI	0.72551086E 02	0.71801894E 02	0.71049828E 02	0.70294738E 02	0.69536469E 02	0.68774864E 02
ALPHA	0.13880767E 02	0.13916881E 02	0.13954906E 02	0.13994904E 02	0.14036939E 02	0.14081084E 02
THETA	0.86574173E 02	0.86419288E 02	0.86262768E 02	0.86104514E 02	0.85944424E 02	0.85782388E 02
R ONE	0.80314335E 01	0.80351785E 01	0.80391266E 01	0.80432849E 01	0.80476608E 01	0.80522629E 01
R TWO	0.10095947E 02	0.10104637E 02	0.10113776E 02	0.10123378E 02	0.10133458E 02	0.10144029E 02
T	0.22122407E-01	0.22199967E-01	0.22281624E-01	0.22367510E-01	0.22457767E-01	0.22552547E-01
X	0.96313778E 01	0.95992256E 01	0.95656219E 01	0.95305476E 01	0.94939834E 01	0.94559079E 01
Y	0.23999997E 01	0.24999997E 01	0.25999997E 01	0.26999997E 01	0.27999996E 01	0.28999996E 01
XFO	0.96419300E 01	0.96097704E 01	0.95761588E 01	0.95410764E 01	0.95045036E 01	0.94664192E 01
YFO	0.24033165E 01	0.25034662E 01	0.26036176E 01	0.27037706E 01	0.28039254E 01	0.29040820E 01
XFI	0.96208255E 01	0.95886807E 01	0.95550848E 01	0.95200187E 01	0.94834630E 01	0.94453965E 01
YFI	0.23966829E 01	0.24965331E 01	0.25963817E 01	0.26962287E 01	0.27960739E 01	0.28959172E 01
XM	0.95282127E 01	0.94964565E 01	0.94632664E 01	0.94286238E 01	0.93925093E 01	0.93549019E 01
YM	0.23675730E 01	0.24662147E 01	0.25648554E 01	0.26634950E 01	0.27621336E 01	0.28607709E 01
SOL	-0.17650407E 03	-0.19249944E 03	-0.20932403E 03	-0.22700285E 03	-0.24556206E 03	-0.26503048E 03
SOLH	0.45009810E 04	0.44983496E 04	0.44955633E 04	0.44926151E 04	0.44894969E 04	0.44862009E 04
SOF	0.47000000E 05	0.47000000E 05	0.47000000E 05	0.47000000E 05	0.47000000E 05	0.47000000E 05
EOL	0.00000000E-38	0.00000000E-38	0.00000000E-38	0.00000000E-38	0.00000000E-38	0.00000000E-38
EOLH	0.00000000E-38	0.00000000E-38	0.00000000E-38	0.00000000E-38	0.00000000E-38	0.00000000E-38
EOF	0.37903226E-02	0.37903226E-02	0.37903226E-02	0.37903226E-02	0.37903226E-02	0.37903226E-02
SOLP	-0.62567008E 04	-0.62762842E 04	-0.62968800E 04	-0.63185182E 04	-0.63412308E 04	-0.63650520E 04
SOLHP	-0.38206890E 03	-0.38534248E 03	-0.38880856E 03	-0.39247591E 03	-0.39635397E 03	-0.40045303E 03
SOFP	0.43288241E 05	0.43285523E 05	0.43282667E 05	0.43279669E 05	0.43276525E 05	0.43273232E 05
EOLP	-0.29933529E-03	-0.29955455E-03	-0.29978492E-03	-0.30002667E-03	-0.30028017E-03	-0.30054571E-03
EOLHP	-0.19931560E-03	-0.19928874E-03	-0.19926082E-03	-0.19923187E-03	-0.19920184E-03	-0.19917081E-03
EOFP	0.34909872E-02	0.34907680E-02	0.34905376E-02	0.34902959E-02	0.34900423E-02	0.34897768E-02
SOLT	-0.62567008E 04	-0.62762842E 04	-0.62968800E 04	-0.63185182E 04	-0.63412308E 04	-0.63650520E 04
SOLHT	-0.38206890E 03	-0.38534248E 03	-0.38880856E 03	-0.39247591E 03	-0.39635397E 03	-0.40045303E 03
SOFT	0.43288241E 05	0.43285523E 05	0.43282667E 05	0.43279669E 05	0.43276525E 05	0.43273232E 05
EOLT	-0.29933529E-03	-0.29955455E-03	-0.29978492E-03	-0.30002667E-03	-0.30028017E-03	-0.30054571E-03
EOLHT	-0.19931560E-03	-0.19928874E-03	-0.19926082E-03	-0.19923187E-03	-0.19920184E-03	-0.19917081E-03
EOFT	0.34909872E-02	0.34907680E-02	0.34905376E-02	0.34902959E-02	0.34900423E-02	0.34897768E-02
SBL	0.12573432E 06	0.12573293E 06	0.12573147E 06	0.12572994E 06	0.12572832E 06	0.12572663E 06
SBLH	0.12592534E 06	0.12592519E 06	0.12592503E 06	0.12592486E 06	0.12592468E 06	0.12592449E 06
SFD	0.32987864E 06	0.32986766E 06	0.32985613E 06	0.32984396E 06	0.32983123E 06	0.32981782E 06
EDL	0.22812795E-01	0.22811908E-01	0.22810980E-01	0.22809996E-01	0.22808970E-01	0.22807890E-01
EDLH	0.22829577E-01	0.22830214E-01	0.22830881E-01	0.22831593E-01	0.22832327E-01	0.22833106E-01
EFD	0.26603116E-01	0.26602231E-01	0.26601301E-01	0.26600320E-01	0.26599292E-01	0.26598212E-01

265

SAMPLE CASE NO. 2, TITANIUM METAL-SHELL

130

DESIGN DATA FOR BALANCED IN PLANE WRAP CONTOUR

CONTOUR INPUT DATA ABIG = 0.239793 C = 0.000004 V LEN = 16.681069

	31	32	33	34	35	36
Z	0.94162993E 00	0.93751337E 00	0.93323861E 00	0.92880300E 00	0.92420375E 00	0.91943783E 00
U	0.29999996E 00	0.30999996E 00	0.31999996E 00	0.32999995E 00	0.33999995E 00	0.34999995E 00
PHI	0.68009756E 02	0.67240973E 02	0.66468340E 02	0.65691669E 02	0.64910770E 02	0.64125445E 02
ALPHA	0.14127415E 02	0.14176014E 02	0.14226972E 02	0.14280380E 02	0.14336345E 02	0.14394974E 02
THETA	0.85618294E 02	0.85452019E 02	0.85283438E 02	0.85112416E 02	0.84938808E 02	0.84762466E 02
R ONE	0.80570998E 01	0.80621815E 01	0.80675180E 01	0.80731206E 01	0.80790013E 01	0.80851734E 01
R TWO	0.10155109E 02	0.10166715E 02	0.10178866E 02	0.10191582E 02	0.10204885E 02	0.10218797E 02
T	0.22652014E-01	0.22756344E-01	0.22865726E-01	0.22980366E-01	0.23100480E-01	0.23226308E-01
X	0.94162992E 01	0.93751336E 01	0.93323860E 01	0.92880300E 01	0.92420375E 01	0.91943783E 01
Y	0.29999996E 01	0.30999996E 01	0.31999995E 01	0.32999995E 01	0.33999995E 01	0.34999995E 01
XFO	0.94268012E 01	0.93856258E 01	0.93428681E 01	0.92985015E 01	0.92524979E 01	0.92048272E 01
YFO	0.30042406E 01	0.31044013E 01	0.32045642E 01	0.33047294E 01	0.34048971E 01	0.35050675E 01
XFI	0.94057971E 01	0.93646413E 01	0.93219038E 01	0.92775584E 01	0.92315770E 01	0.91839292E 01
YFI	0.29957586E 01	0.30955978E 01	0.31954349E 01	0.32952696E 01	0.33951018E 01	0.34949315E 01
XM	0.93157799E 01	0.92751200E 01	0.92328970E 01	0.91890852E 01	0.91436567E 01	0.90965813E 01
YM	0.29594070E 01	0.30580418E 01	0.31566751E 01	0.32553069E 01	0.33539371E 01	0.34525655E 01
SOL	-0.28543808E 03	-0.30681778E 03	-0.32920454E 03	-0.35263548E 03	-0.37715110E 03	-0.40279508E 03
SOLH	0.44827176E 04	0.44790377E 04	0.44751501E 04	0.44710434E 04	0.44667048E 04	0.44621212E 04
SOF	0.47000000E 05	0.47000000E 05	0.47000000E 05	0.47000000E 05	0.47000000E 05	0.47000000E 05
EOL	0.00000000E-38	0.00000000E-38	0.00000000E-38	0.00000000E-38	0.00000000E-38	0.00000000E-38
EOLH	0.00000000E-38	0.00000000E-38	0.00000000E-38	0.00000000E-38	0.00000000E-38	0.00000000E-38
EOF	0.37903226E-02	0.37903226E-02	0.37903226E-02	0.37903226E-02	0.37903226E-02	0.37903226E-02
SOLP	-0.63900185E 04	-0.64161694E 04	-0.64435473E 04	-0.64721971E 04	-0.65021666E 04	-0.65335093E 04
SOLHP	-0.40478424E 03	-0.40935965E 03	-0.41419254E 03	-0.41929710E 03	-0.42468900E 03	-0.43038524E 03
SOFP	0.43269786E 05	0.43266180E 05	0.43262411E 05	0.43258471E 05	0.43254355E 05	0.43250060E 05
EOLP	-0.30082370E-03	-0.30111448E-03	-0.30141849E-03	-0.30173620E-03	-0.30206802E-03	-0.30241450E-03
EOLHP	-0.19913875E-03	-0.19910572E-03	-0.19907170E-03	-0.19903676E-03	-0.19900091E-03	-0.19896424E-03
EOFP	0.34894988E-02	0.34892081E-02	0.34889041E-02	0.34885864E-02	0.34882545E-02	0.34879080E-02
SOLT	-0.63900185E 04	-0.64161694E 04	-0.64435473E 04	-0.64721971E 04	-0.65021666E 04	-0.65335093E 04
SOLHT	-0.40478424E 03	-0.40935965E 03	-0.41419254E 03	-0.41929710E 03	-0.42468900E 03	-0.43038524E 03
SOFT	0.43269786E 05	0.43266180E 05	0.43262411E 05	0.43258471E 05	0.43254355E 05	0.43250060E 05
EOLT	-0.30082370E-03	-0.30111448E-03	-0.30141849E-03	-0.30173620E-03	-0.30206802E-03	-0.30241450E-03
EOLHT	-0.19913875E-03	-0.19910572E-03	-0.19907170E-03	-0.19903676E-03	-0.19900091E-03	-0.19896424E-03
EOFT	0.34894988E-02	0.34892081E-02	0.34889041E-02	0.34885864E-02	0.34882545E-02	0.34879080E-02
SBL	0.12572485E 06	0.12572299E 06	0.12572104E 06	0.12571900E 06	0.12571686E 06	0.12571462E 06
SBLH	0.12592428E 06	0.12592407E 06	0.12592384E 06	0.12592360E 06	0.12592334E 06	0.12592308E 06
SFD	0.32980379E 06	0.32978906E 06	0.32977363E 06	0.32975749E 06	0.32974061E 06	0.32972287E 06
EDL	0.22806757E-01	0.22805570E-01	0.22804325E-01	0.22803026E-01	0.22801665E-01	0.22800236E-01
EDLH	0.22833915E-01	0.22834767E-01	0.22835655E-01	0.22836584E-01	0.22837549E-01	0.22838577E-01
EFD	0.26597080E-01	0.26595892E-01	0.26594647E-01	0.26593346E-01	0.26591985E-01	0.26590554E-01

96

SAMPLE CASE NO. 2, TITANIUM METAL-SHELL

131

DESIGN DATA FOR BALANCED IN PLANE WRAP CONTOUR

CONTOUR INPUT DATA ABIG = 0.239793 C = 0.000004 V LEN = 16.681069

	37	38	39	40	41	42
Z	0.91450209E 00	0.90939318E 00	0.90410750E 00	0.89864126E 00	0.89299043E 00	0.88715070E 00
U	0.35999995E 00	0.36999995E 00	0.37999994E 00	0.38999994E 00	0.39999994E 00	0.40999994E 00
PHI	0.63335483E 02	0.62540668E 02	0.61740771E 02	0.60935555E 02	0.60124770E 02	0.59308153E 02
ALPHA	0.14456388E 02	0.14520715E 02	0.14588094E 02	0.14658675E 02	0.14732623E 02	0.14810111E 02
THETA	0.84583228E 02	0.84400920E 02	0.84215360E 02	0.84026351E 02	0.83833682E 02	0.83637129E 02
R ONE	0.80916505E 01	0.80984479E 01	0.81055824E 01	0.81130716E 01	0.81209348E 01	0.81291934E 01
R TWO	0.10233344E 02	0.10248552E 02	0.10264450E 02	0.10281070E 02	0.10298444E 02	0.10316609E 02
T	0.23358105E-01	0.23496144E-01	0.23640727E-01	0.23792174E-01	0.23950837E-01	0.24117093E-01
X	0.91450208E 01	0.90939317E 01	0.90410749E 01	0.89864125E 01	0.89299042E 01	0.88715070E 01
Y	0.35999995E 01	0.36999995E 01	0.37999994E 01	0.38999994E 01	0.39999994E 01	0.40999994E 01
XFO	0.91554577E 01	0.91043562E 01	0.90514864E 01	0.89968106E 01	0.89402882E 01	0.88818765E 01
YFO	0.36052406E 01	0.37054167E 01	0.38055959E 01	0.39057784E 01	0.40059645E 01	0.41061543E 01
XFI	0.91345838E 01	0.90835071E 01	0.90306633E 01	0.89760144E 01	0.89195201E 01	0.88611375E 01
YFI	0.35947583E 01	0.36945822E 01	0.37944029E 01	0.38942204E 01	0.39940342E 01	0.40938444E 01
XM	0.90478283E 01	0.89973643E 01	0.89451538E 01	0.88911593E 01	0.88353409E 01	0.87776561E 01
YM	0.35511921E 01	0.36498167E 01	0.37484392E 01	0.38470595E 01	0.39456774E 01	0.40442927E 01
SOL	-0.42961351E 03	-0.45765609E 03	-0.48697713E 03	-0.51763424E 03	-0.54969002E 03	-0.58321215E 03
SOLH	0.44572768E 04	0.44521553E 04	0.44467390E 04	0.44410078E 04	0.44349400E 04	0.44285118E 04
SOF	0.47000000E 05	0.47000000E 05	0.47000000E 05	0.47000000E 05	0.47000000E 05	0.47000000E 05
EOL	0.00000000E-38	0.00000000E-38	0.00000000E-38	0.00000000E-38	0.00000000E-38	0.00000000E-38
EOLH	0.00000000E-38	0.00000000E-38	0.00000000E-38	0.00000000E-38	0.00000000E-38	0.00000000E-38
EOF	0.37903226E-02	0.37903226E-02	0.37903226E-02	0.37903226E-02	0.37903226E-02	0.37903226E-02
SOLP	-0.65662803E 04	-0.66005395E 04	-0.66363519E 04	-0.66737872E 04	-0.67129207E 04	-0.67538330E 04
SOLHP	-0.43640436E 03	-0.44276671E 03	-0.44949448E 03	-0.45661210E 03	-0.46414639E 03	-0.47212677E 03
SOFP	0.43245575E 05	0.43240895E 05	0.43236011E 05	0.43230916E 05	0.43225600E 05	0.43220053E 05
EOLP	-0.30277617E-03	-0.30315363E-03	-0.30354747E-03	-0.30395839E-03	-0.30438710E-03	-0.30483435E-03
EOLHP	-0.19892674E-03	-0.19888848E-03	-0.19884954E-03	-0.19880998E-03	-0.19876989E-03	-0.19872938E-03
EOFP	0.34875464E-02	0.34871689E-02	0.34867751E-02	0.34863642E-02	0.34859354E-02	0.34854882E-02
SOLT	-0.65662803E 04	-0.66005395E 04	-0.66363519E 04	-0.66737872E 04	-0.67129207E 04	-0.67538330E 04
SOLHT	-0.43640436E 03	-0.44276671E 03	-0.44949448E 03	-0.45661210E 03	-0.46414639E 03	-0.47212677E 03
SOFT	0.43245575E 05	0.43240895E 05	0.43236011E 05	0.43230916E 05	0.43225600E 05	0.43220053E 05
EOLT	-0.30277617E-03	-0.30315363E-03	-0.30354747E-03	-0.30395839E-03	-0.30438710E-03	-0.30483435E-03
EOLHT	-0.19892674E-03	-0.19888848E-03	-0.19884954E-03	-0.19880998E-03	-0.19876989E-03	-0.19872938E-03
EOFT	0.34875464E-02	0.34871689E-02	0.34867751E-02	0.34863642E-02	0.34859354E-02	0.34854882E-02
SBL	0.12571227E 06	0.12570982E 06	0.12570725E 06	0.12570456E 06	0.12570174E 06	0.12569880E 06
SBLH	0.12592279E 06	0.12592249E 06	0.12592217E 06	0.12592183E 06	0.12592147E 06	0.12592108E 06
SFO	0.32970432E 06	0.32968494E 06	0.32966462E 06	0.32964339E 06	0.32962114E 06	0.32959788E 06
EDL	0.22798736E-01	0.22797174E-01	0.22795535E-01	0.22793822E-01	0.22792028E-01	0.22790154E-01
EDLH	0.22839642E-01	0.22840750E-01	0.22841916E-01	0.22843130E-01	0.22844397E-01	0.22845719E-01
EFO	0.26589058E-01	0.26587495E-01	0.26585856E-01	0.26584144E-01	0.26582350E-01	0.26580474E-01

26

DESIGN DATA FOR BALANCED IN PLANE WRAP CONTOUR

CONTOUR INPUT DATA ABIG = 0.239793 C = 0.000004 V LEN = 16.681069

	43	44	45	46	47	48
Z	0.88111750E 00	0.87488595E 00	0.86845081E 00	0.86180654E 00	0.85494716E 00	0.84786629E 00
U	0.41999993E 00	0.42999993E 00	0.43999993E 00	0.44999993E 00	0.45999993E 00	0.46999992E 00
PHI	0.58485429E 02	0.57656307E 02	0.56820480E 02	0.55977625E 02	0.55127400E 02	0.54269440E 02
ALPHA	0.14891335E 02	0.14976501E 02	0.15065837E 02	0.15159593E 02	0.15258039E 02	0.15361475E 02
THETA	0.83436446E 02	0.83231372E 02	0.83021624E 02	0.82806892E 02	0.82586846E 02	0.82361120E 02
R ONE	0.81378703E 01	0.81469907E 01	0.81565819E 01	0.81666741E 01	0.81773002E 01	0.81884966E 01
R TWO	0.10335603E 02	0.10355470E 02	0.10376255E 02	0.10398007E 02	0.10420781E 02	0.10444636E 02
T	0.24291357E-01	0.24474078E-01	0.24665747E-01	0.24866899E-01	0.25078122E-01	0.25300059E-01
X	0.88111750E 01	0.87488594E 01	0.86845081E 01	0.86180654E 01	0.85494716E 01	0.84786628E 01
Y	0.41999993E 01	0.42999993E 01	0.43999993E 01	0.44999993E 01	0.45999992E 01	0.46999992E 01
XFO	0.88215292E 01	0.87591978E 01	0.86948302E 01	0.86283704E 01	0.85597589E 01	0.84889318E 01
YFO	0.42063481E 01	0.43065460E 01	0.44067486E 01	0.45069560E 01	0.46071685E 01	0.47073865E 01
XFI	0.88008207E 01	0.87385209E 01	0.86741859E 01	0.86077602E 01	0.85391842E 01	0.84683938E 01
YFI	0.41936505E 01	0.42934525E 01	0.43932499E 01	0.44930425E 01	0.45928299E 01	0.46926119E 01
XM	0.87180593E 01	0.86565024E 01	0.85929339E 01	0.85272985E 01	0.84595373E 01	0.83895870E 01
YM	0.41429054E 01	0.42415150E 01	0.43401214E 01	0.44387246E 01	0.45373241E 01	0.46359196E 01
SOL	-0.61827388E 03	-0.65495391E 03	-0.69333819E 03	-0.73352028E 03	-0.77560114E 03	-0.81969212E 03
SOLH	0.44216969E 04	0.44144658E 04	0.44067864E 04	0.43986227E 04	0.43899345E 04	0.43806773E 04
SOF	0.47000000E 05	0.47000000E 05	0.47000000E 05	0.47000000E 05	0.47000000E 05	0.47000000E 05
EOL	0.00000000E-38	0.00000000E-38	0.00000000E-38	0.00000000E-38	0.00000000E-38	0.00000000E-38
EOLH	0.00000000E-38	0.00000000E-38	0.00000000E-38	0.00000000E-38	0.00000000E-38	0.00000000E-38
EOF	0.37903226E-02	0.37903226E-02	0.37903226E-02	0.37903226E-02	0.37903226E-02	0.37903226E-02
SOLP	-0.67966125E 04	-0.68413538E 04	-0.68881601E 04	-0.69371431E 04	-0.69884240E 04	-0.70421359E 04
SOLHP	-0.48058593E 03	-0.48955975E 03	-0.49908812E 03	-0.50921533E 03	-0.51999060E 03	-0.53146906E 03
SOFP	0.43214267E 05	0.43208229E 05	0.43201929E 05	0.43195352E 05	0.43188483E 05	0.43181311E 05
EOLP	-0.30530097E-03	-0.30578789E-03	-0.30629606E-03	-0.30682649E-03	-0.30738032E-03	-0.30795874E-03
EOLHP	-0.19868857E-03	-0.19864758E-03	-0.19860658E-03	-0.19856576E-03	-0.19852531E-03	-0.19848551E-03
EOFP	0.34850215E-02	0.34845346E-02	0.34840265E-02	0.34834961E-02	0.34829422E-02	0.34823638E-02
SOLT	-0.67966125E 04	-0.68413538E 04	-0.68881601E 04	-0.69371431E 04	-0.69884240E 04	-0.70421359E 04
SOLHT	-0.48058593E 03	-0.48955975E 03	-0.49908812E 03	-0.50921533E 03	-0.51999060E 03	-0.53146906E 03
SOFT	0.43214267E 05	0.43208229E 05	0.43201929E 05	0.43195352E 05	0.43188483E 05	0.43181311E 05
EOLT	-0.30530097E-03	-0.30578789E-03	-0.30629606E-03	-0.30682649E-03	-0.30738032E-03	-0.30795874E-03
EOLHT	-0.19868857E-03	-0.19864758E-03	-0.19860658E-03	-0.19856576E-03	-0.19852531E-03	-0.19848551E-03
EOFT	0.34850215E-02	0.34845346E-02	0.34840265E-02	0.34834961E-02	0.34829422E-02	0.34823638E-02
SBL	0.12569571E 06	0.12569248E 06	0.12568910E 06	0.12568555E 06	0.12568183E 06	0.12567793E 06
SBLH	0.12592068E 06	0.12592024E 06	0.12591978E 06	0.12591929E 06	0.12591876E 06	0.12591819E 06
SFD	0.32957350E 06	0.32954798E 06	0.32952128E 06	0.32949329E 06	0.32946397E 06	0.32943317E 06
EDL	0.22788183E-01	0.22786130E-01	0.22783976E-01	0.22781718E-01	0.22779351E-01	0.22776871E-01
EDLH	0.22847111E-01	0.22848557E-01	0.22850071E-01	0.22851654E-01	0.22853308E-01	0.22855040E-01
EFD	0.26578508E-01	0.26576450E-01	0.26574297E-01	0.26572039E-01	0.26569675E-01	0.26567191E-01

265

DESIGN DATA FOR BALANCED IN PLANE WRAP CONTOUR

CONTOUR INPUT DATA ABIG = 0.239793 C = 0.000004 V LEN = 16.681069

	49	50	51	52	53	54
Z	0.84055708E 00	0.83301219E 00	0.82522368E 00	0.81718303E 00	0.80888099E 00	0.80030759E 00
U	0.47999992E 00	0.48999992E 00	0.49999992E 00	0.50999991E 00	0.51999990E 00	0.52999989E 00
PHI	0.53403359E 02	0.52528748E 02	0.51645166E 02	0.50752148E 02	0.49849191E 02	0.48935759E 02
ALPHA	0.15470230E 02	0.15584660E 02	0.15705169E 02	0.15832195E 02	0.15966228E 02	0.16107816E 02
THETA	0.82129318E 02	0.81891008E 02	0.81645713E 02	0.81392910E 02	0.81132020E 02	0.80862405E 02
R ONE	0.82003036E 01	0.82127651E 01	0.82259306E 01	0.82398545E 01	0.82545978E 01	0.82702283E 01
R TWO	0.10469636E 02	0.10495852E 02	0.10523360E 02	0.10552246E 02	0.10582603E 02	0.10614534E 02
T	0.25533421E-01	0.25778987E-01	0.26037623E-01	0.26310286E-01	0.26598041E-01	0.26902079E-01
X	0.84055707E 01	0.83301218E 01	0.82522367E 01	0.81718302E 01	0.80888098E 01	0.80030758E 01
Y	0.47999992E 01	0.48999992E 01	0.49999992E 01	0.50999991E 01	0.51999990E 01	0.52999989E 01
XFO	0.84158205E 01	0.83403516E 01	0.82624458E 01	0.81820177E 01	0.80989749E 01	0.80132174E 01
YFO	0.48076104E 01	0.49078407E 01	0.50080777E 01	0.51083220E 01	0.52085742E 01	0.53088349E 01
XFI	0.83953209E 01	0.83198918E 01	0.82420275E 01	0.81616426E 01	0.80786446E 01	0.79929341E 01
YFI	0.47923879E 01	0.48921577E 01	0.49919206E 01	0.50916761E 01	0.51914237E 01	0.52911628E 01
XM	0.83173801E 01	0.82428435E 01	0.81658990E 01	0.80864623E 01	0.80044416E 01	0.79197384E 01
YM	0.47345110E 01	0.48330978E 01	0.49316795E 01	0.50302559E 01	0.51288263E 01	0.52273905E 01
SOL	-0.86591334E 03	-0.91439722E 03	-0.96528869E 03	-0.10187471E 04	-0.10749483E 04	-0.11340865E 04
SOLH	0.43708011E 04	0.43602496E 04	0.43489596E 04	0.43368593E 04	0.43238678E 04	0.43098918E 04
SOF	0.47000000E 05	0.47000000E 05	0.47000000E 05	0.47000000E 05	0.47000000E 05	0.47000000E 05
EOL	0.00000000E-38	0.00000000E-38	0.00000000E-38	0.00000000E-38	0.00000000E-38	0.00000000E-38
EOLH	0.00000000E-38	0.00000000E-38	0.00000000E-38	0.00000000E-38	0.00000000E-38	0.00000000E-38
EOF	0.37903226E-02	0.37903226E-02	0.37903226E-02	0.37903226E-02	0.37903226E-02	0.37903226E-02
SOLP	-0.70984232E 04	-0.71574443E 04	-0.72193719E 04	-0.72843973E 04	-0.73527301E 04	-0.74246022E 04
SOLHP	-0.54371229E 03	-0.55678931E 03	-0.57077816E 03	-0.58576686E 03	-0.60185525E 03	-0.61915720E 03
SOFP	0.43173817E 05	0.43165984E 05	0.43157791E 05	0.43149219E 05	0.43140244E 05	0.43130843E 05
EOLP	-0.30856312E-03	-0.30919488E-03	-0.30985552E-03	-0.31054680E-03	-0.31127055E-03	-0.31202879E-03
EOLHP	-0.19844664E-03	-0.19840903E-03	-0.19837311E-03	-0.19833931E-03	-0.19830822E-03	-0.19828044E-03
EOFP	0.34817594E-02	0.34811277E-02	0.34804670E-02	0.34797757E-02	0.34790519E-02	0.34782937E-02
SOLT	-0.70984232E 04	-0.71574443E 04	-0.72193719E 04	-0.72843973E 04	-0.73527301E 04	-0.74246022E 04
SOLHT	-0.54371229E 03	-0.55678931E 03	-0.57077816E 03	-0.58576686E 03	-0.60185525E 03	-0.61915720E 03
SOFT	0.43173817E 05	0.43165984E 05	0.43157791E 05	0.43149219E 05	0.43140244E 05	0.43130843E 05
EOLT	-0.30856312E-03	-0.30919488E-03	-0.30985552E-03	-0.31054680E-03	-0.31127055E-03	-0.31202879E-03
EOLHT	-0.19844664E-03	-0.19840903E-03	-0.19837311E-03	-0.19833931E-03	-0.19830822E-03	-0.19828044E-03
EOFT	0.34817594E-02	0.34811277E-02	0.34804670E-02	0.34797757E-02	0.34790519E-02	0.34782937E-02
SBL	0.12567384E 06	0.12566953E 06	0.12566501E 06	0.12566025E 06	0.12565524E 06	0.12564995E 06
SBLH	0.12591759E 06	0.12591695E 06	0.12591625E 06	0.12591550E 06	0.12591470E 06	0.12591383E 06
SFD	0.32940088E 06	0.32936698E 06	0.32933137E 06	0.32929394E 06	0.32925454E 06	0.32921305E 06
EDL	0.22774267E-01	0.22771529E-01	0.22768662E-01	0.22765639E-01	0.22762462E-01	0.22759116E-01
EDLH	0.22856856E-01	0.22858756E-01	0.22860741E-01	0.22862829E-01	0.22865019E-01	0.22867307E-01
EFD	0.26564587E-01	0.26561853E-01	0.26558982E-01	0.26555963E-01	0.26552786E-01	0.26549439E-01

269

SAMPLE CASE NO. 2, TITANIUM METAL-SHELL

134

DESIGN DATA FOR BALANCED IN PLANE WRAP CONTOUR

CONTOUR INPUT DATA ABIG = 0.239793 C = 0.000004 V LEN = 16.681069

	55	56	57	58	59	60
Z	0.79145202E 00	0.78230248E 00	0.77284614E 00	0.76306897E 00	0.75295557E 00	0.74248901E 00
U	0.53999988E 00	0.54999987E 00	0.55999986E 00	0.56999985E 00	0.57999984E 00	0.58999983E 00
PHI	0.48011273E 02	0.47075110E 02	0.46126597E 02	0.45165002E 02	0.44189534E 02	0.43199326E 02
ALPHA	0.16257566E 02	0.16416163E 02	0.16584377E 02	0.16763075E 02	0.16953246E 02	0.17156014E 02
THETA	0.80583353E 02	0.80294070E 02	0.79993671E 02	0.79681157E 02	0.79355400E 02	0.79015123E 02
R ONE	0.82868232E 01	0.83044677E 01	0.83232601E 01	0.83433110E 01	0.83647468E 01	0.83877126E 01
R TWO	0.10648154E 02	0.10683588E 02	0.10720979E 02	0.10760484E 02	0.10802280E 02	0.10846566E 02
T	0.27223728E-01	0.27564483E-01	0.27926030E-01	0.28310279E-01	0.28719402E-01	0.29155884E-01
X	0.79145202E 01	0.78230247E 01	0.77284614E 01	0.76306896E 01	0.75295557E 01	0.74248901E 01
Y	0.53999988E 01	0.54999987E 01	0.55999986E 01	0.56999985E 01	0.57999984E 01	0.58999983E 01
XFO	0.79246376E 01	0.78331167E 01	0.77385269E 01	0.76407276E 01	0.75395648E 01	0.74348692E 01
YFO	0.54091049E 01	0.55093849E 01	0.56096759E 01	0.57099788E 01	0.58102948E 01	0.59106253E 01
XFI	0.79044028E 01	0.78129327E 01	0.77183958E 01	0.76206516E 01	0.75195464E 01	0.74149109E 01
YFI	0.53908926E 01	0.54906124E 01	0.55903212E 01	0.56900181E 01	0.57897019E 01	0.58893713E 01
XM	0.78322455E 01	0.77418462E 01	0.76484135E 01	0.75518083E 01	0.74518784E 01	0.73484559E 01
YM	0.53259476E 01	0.54244971E 01	0.55230383E 01	0.56215702E 01	0.57200919E 01	0.58186022E 01
SOL	-0.11963763E 04	-0.12620571E 04	-0.13313947E 04	-0.14046872E 04	-0.14822688E 04	-0.15645165E 04
SOLH	0.42948265E 04	0.42785494E 04	0.42609206E 04	0.42417772E 04	0.42209293E 04	0.41981539E 04
SOF	0.47000000E 05	0.47000000E 05	0.47000000E 05	0.47000000E 05	0.47000000E 05	0.47000000E 05
EOL	0.00000000E-38	0.00000000E-38	0.00000000E-38	0.00000000E-38	0.00000000E-38	0.00000000E-38
EOLH	0.00000000E-38	0.00000000E-38	0.00000000E-38	0.00000000E-38	0.00000000E-38	0.00000000E-38
EOF	0.37903226E-02	0.37903226E-02	0.37903226E-02	0.37903226E-02	0.37903226E-02	0.37903226E-02
SOLP	-0.75002698E 04	-0.75800181E 04	-0.76641644E 04	-0.77530634E 04	-0.78471129E 04	-0.79467610E 04
SOLHP	-0.63780257E 03	-0.65794089E 03	-0.67974437E 03	-0.70341287E 03	-0.72917946E 03	-0.75731736E 03
SOFP	0.43120985E 05	0.43110642E 05	0.43099781E 05	0.43088363E 05	0.43076350E 05	0.43063695E 05
EOLP	-0.31282373E-03	-0.31365782E-03	-0.31453378E-03	-0.31545452E-03	-0.31642335E-03	-0.31744390E-03
EOLHP	-0.19825680E-03	-0.19823818E-03	-0.19822567E-03	-0.19822058E-03	-0.19822450E-03	-0.19823930E-03
EOFP	0.34774988E-02	0.34766647E-02	0.34757887E-02	0.34748680E-02	0.34738992E-02	0.34728786E-02
SOLT	-0.75002698E 04	-0.75800181E 04	-0.76641644E 04	-0.77530634E 04	-0.78471129E 04	-0.79467610E 04
SOLHT	-0.63780257E 03	-0.65794089E 03	-0.67974437E 03	-0.70341287E 03	-0.72917946E 03	-0.75731736E 03
SOFT	0.43120985E 05	0.43110642E 05	0.43099781E 05	0.43088363E 05	0.43076350E 05	0.43063695E 05
EOLT	-0.31282373E-03	-0.31365782E-03	-0.31453378E-03	-0.31545452E-03	-0.31642335E-03	-0.31744390E-03
EOLHT	-0.19825680E-03	-0.19823818E-03	-0.19822567E-03	-0.19822058E-03	-0.19822450E-03	-0.19823930E-03
EOFT	0.34774988E-02	0.34766647E-02	0.34757887E-02	0.34748680E-02	0.34738992E-02	0.34728786E-02
SBL	0.12564438E 06	0.12563849E 06	0.12563226E 06	0.12562566E 06	0.12561865E 06	0.12561121E 06
SBLH	0.12591289E 06	0.12591186E 06	0.12591075E 06	0.12590954E 06	0.12590821E 06	0.12590675E 06
SFD	0.32916930E 06	0.32912313E 06	0.32907433E 06	0.32902273E 06	0.32896804E 06	0.32891001E 06
EDL	0.22755590E-01	0.22751864E-01	0.22747929E-01	0.22743770E-01	0.22739357E-01	0.22734678E-01
EDLH	0.22869725E-01	0.22872257E-01	0.22874924E-01	0.22877730E-01	0.22880692E-01	0.22883815E-01
EFD	0.26545911E-01	0.26542188E-01	0.26538252E-01	0.26534091E-01	0.26529681E-01	0.26525001E-01

27

SAMPLE CASE NO. 2, TITANIUM METAL-SHELL

135

DESIGN DATA FOR BALANCED IN PLANE WRAP CONTOUR

CONTOUR INPUT DATA ABIG = 0.239793 C = 0.000004 V LEN = 16.681069

	61	62	63	64	65	66
Z	0.73165061E 00	0.72041966E 00	0.70877313E 00	0.69668525E 00	0.68412712E 00	0.67106608E 00
U	0.59999982E 00	0.60999981E 00	0.61999980E 00	0.62999979E 00	0.63999978E 00	0.64999977E 00
PHI	0.42193432E 02	0.41170814E 02	0.40130327E 02	0.39070706E 02	0.37990546E 02	0.36888279E 02
ALPHA	0.17372668E 02	0.17604694E 02	0.17853811E 02	0.18122029E 02	0.18411705E 02	0.18725632E 02
THETA	0.78658870E 02	0.78284966E 02	0.77891485E 02	0.77476190E 02	0.77036464E 02	0.76569222E 02
R ONE	0.84123758E 01	0.84389309E 01	0.84676045E 01	0.84986635E 01	0.85324242E 01	0.85692645E 01
R TWO	0.10893567E 02	0.10943539E 02	0.10996774E 02	0.11053605E 02	0.11114417E 02	0.11179656E 02
T	0.29622580E-01	0.30122790E-01	0.30660356E-01	0.31239778E-01	0.31866363E-01	0.32546430E-01
X	0.73165060E 01	0.72041966E 01	0.70877312E 01	0.69668524E 01	0.68412712E 01	0.67106608E 01
Y	0.59999982E 01	0.60999981E 01	0.61999980E 01	0.62999979E 01	0.63999978E 01	0.64999977E 01
XFO	0.73264538E 01	0.72141116E 01	0.70976120E 01	0.69766973E 01	0.68510786E 01	0.67204289E 01
YFO	0.60109716E 01	0.61113356E 01	0.62117192E 01	0.63121247E 01	0.64125549E 01	0.65130131E 01
XFI	0.73065582E 01	0.71942815E 01	0.70778505E 01	0.69570075E 01	0.68314638E 01	0.67008927E 01
YFI	0.59890248E 01	0.60886606E 01	0.61882768E 01	0.62878711E 01	0.63874407E 01	0.64869823E 01
XM	0.72413558E 01	0.71303732E 01	0.70152797E 01	0.68958201E 01	0.67717081E 01	0.66426198E 01
YM	0.59171000E 01	0.60155836E 01	0.61140513E 01	0.62125012E 01	0.63109307E 01	0.64093369E 01
SOL	-0.16518561E 04	-0.17447713E 04	-0.18438153E 04	-0.19496223E 04	-0.20629229E 04	-0.21845670E 04
SOLH	0.41731880E 04	0.41457190E 04	0.41153724E 04	0.40816964E 04	0.40441397E 04	0.40020258E 04
SOF	0.47000000E 05	0.47000000E 05	0.47000000E 05	0.47000000E 05	0.47000000E 05	0.47000000E 05
EOL	0.00000000E-38	0.00000000E-38	0.00000000E-38	0.00000000E-38	0.00000000E-38	0.00000000E-38
EOLH	0.00000000E-38	0.00000000E-38	0.00000000E-38	0.00000000E-38	0.00000000E-38	0.00000000E-38
EOF	0.37903226E-02	0.37903226E-02	0.37903226E-02	0.37903226E-02	0.37903226E-02	0.37903226E-02
SOLP	-0.80525141E 04	-0.81649469E 04	-0.82847152E 04	-0.84125717E 04	-0.85493822E 04	-0.86961526E 04
SOLHP	-0.78814897E 03	-0.82205753E 03	-0.85950159E 03	-0.90103457E 03	-0.94733019E 03	-0.99921672E 03
SOFP	0.43050349E 05	0.43036254E 05	0.43021350E 05	0.43005564E 05	0.42988818E 05	0.42971024E 05
EOLP	-0.31852023E-03	-0.31965687E-03	-0.32085884E-03	-0.32213185E-03	-0.32348229E-03	-0.32491735E-03
EOLHP	-0.19826727E-03	-0.19831127E-03	-0.19837474E-03	-0.19846199E-03	-0.19857835E-03	-0.19873063E-03
EOFP	0.34718023E-02	0.34706657E-02	0.34694637E-02	0.34681907E-02	0.34668402E-02	0.34654052E-02
SOLT	-0.80525141E 04	-0.81649469E 04	-0.82847152E 04	-0.84125717E 04	-0.85493822E 04	-0.86961526E 04
SOLHT	-0.78814897E 03	-0.82205753E 03	-0.85950159E 03	-0.90103457E 03	-0.94733019E 03	-0.99921672E 03
SOFT	0.43050349E 05	0.43036254E 05	0.43021350E 05	0.43005564E 05	0.42988818E 05	0.42971024E 05
EOLT	-0.31852023E-03	-0.31965687E-03	-0.32085884E-03	-0.32213185E-03	-0.32348229E-03	-0.32491735E-03
EOLHT	-0.19826727E-03	-0.19831127E-03	-0.19837474E-03	-0.19846199E-03	-0.19857835E-03	-0.19873063E-03
EOFT	0.34718023E-02	0.34706657E-02	0.34694637E-02	0.34681907E-02	0.34668402E-02	0.34654052E-02
SBL	0.12560328E 06	0.12559482E 06	0.12558578E 06	0.12557608E 06	0.12556565E 06	0.12555441E 06
SBLH	0.12590514E 06	0.12590336E 06	0.12590138E 06	0.12589917E 06	0.12589669E 06	0.12589388E 06
SFO	0.32884834E 06	0.32878270E 06	0.32871268E 06	0.32863778E 06	0.32855760E 06	0.32847141E 06
EDL	0.22729707E-01	0.22724412E-01	0.22718767E-01	0.22712725E-01	0.22706258E-01	0.22699310E-01
EDLH	0.22887111E-01	0.22890597E-01	0.22894289E-01	0.22898207E-01	0.22902352E-01	0.22906760E-01
EFD	0.26520027E-01	0.26514734E-01	0.26509087E-01	0.26503047E-01	0.26496581E-01	0.26489630E-01

93

DESIGN DATA FOR BALANCED IN PLANE WRAP CONTOUR

CONTOUR INPUT DATA ABIG = 0.239793 C = 0.000004 V LEN = 16.681069

	67	68	69	70	71	72
Z	0.65746503E 00	0.64328156E 00	0.62846685E 00	0.61296418E 00	0.59670715E 00	0.57961715E 00
U	0.65999977E 00	0.66999976E 00	0.67999975E 00	0.68999974E 00	0.69999973E 00	0.70999972E 00
PHI	0.35762147E 02	0.34610168E 02	0.33430095E 02	0.32219365E 02	0.30975034E 02	0.29693694E 02
ALPHA	0.19067142E 02	0.19440254E 02	0.19849860E 02	0.20301990E 02	0.20804173E 02	0.21365955E 02
THETA	0.76070804E 02	0.75536813E 02	0.74961922E 02	0.74339596E 02	0.73661716E 02	0.72918036E 02
R ONE	0.86096412E 01	0.86541096E 01	0.87033578E 01	0.87582438E 01	0.88198599E 01	0.88896164E 01
R TWO	0.11249843E 02	0.11325586E 02	0.11407609E 02	0.11496770E 02	0.11594103E 02	0.11700859E 02
T	0.33287569E-01	0.34098987E-01	0.34991980E-01	0.35980592E-01	0.37082531E-01	0.38320507E-01
X	0.65746503E 01	0.64328156E 01	0.62846685E 01	0.61296417E 01	0.59670715E 01	0.57961715E 01
Y	0.65999976E 01	0.66999975E 01	0.67999974E 01	0.68999974E 01	0.69999973E 01	0.70999972E 01
XFO	0.65843772E 01	0.64424995E 01	0.62943074E 01	0.61392334E 01	0.59766140E 01	0.58056628E 01
YFO	0.66135032E 01	0.67140298E 01	0.68145989E 01	0.69152173E 01	0.70158944E 01	0.71166414E 01
XFI	0.65649233E 01	0.64231316E 01	0.62750296E 01	0.61200500E 01	0.59575289E 01	0.57866802E 01
YFI	0.65864920E 01	0.66859652E 01	0.67853960E 01	0.68847773E 01	0.69841001E 01	0.70833529E 01
XM	0.65081877E 01	0.63679912E 01	0.62215464E 01	0.60682906E 01	0.59075653E 01	0.57385904E 01
YM	0.65077164E 01	0.66060649E 01	0.67043771E 01	0.68026463E 01	0.69008645E 01	0.69990208E 01
SOL	-0.23155455E 04	-0.24570243E 04	-0.26103837E 04	-0.27772722E 04	-0.29596739E 04	-0.31600018E 04
SOLH	0.39545136E 04	0.39005432E 04	0.38387670E 04	0.37674386E 04	0.36842634E 04	0.35861634E 04
SOF	0.47000000E 05	0.47000000E 05	0.47000000E 05	0.47000000E 05	0.47000000E 05	0.47000000E 05
EOL	0.00000000E-38	0.00000000E-38	0.00000000E-38	0.00000000E-38	0.00000000E-38	0.00000000E-38
EOLH	0.00000000E-38	0.00000000E-38	0.00000000E-38	0.00000000E-38	0.00000000E-38	0.00000000E-38
EOF	0.37903226E-02	0.37903226E-02	0.37903226E-02	0.37903226E-02	0.37903226E-02	0.37903226E-02
SOLP	-0.88540551E 04	-0.90244684E 04	-0.92090222E 04	-0.94096630E 04	-0.96287312E 04	-0.98690708E 04
SOLHP	-0.10577227E 04	-0.11241419E 04	-0.12001218E 04	-0.12877927E 04	-0.13899552E 04	-0.15103621E 04
SOFP	0.42952079E 05	0.42931870E 05	0.42910267E 05	0.42887122E 05	0.42862270E 05	0.42835525E 05
EOLP	-0.32644515E-03	-0.32807496E-03	-0.32981717E-03	-0.33168370E-03	-0.33368792E-03	-0.33584477E-03
EOLHP	-0.19892748E-03	-0.19917994E-03	-0.19950260E-03	-0.19991458E-03	-0.20044172E-03	-0.20111936E-03
EOFP	0.34638773E-02	0.34622476E-02	0.34605054E-02	0.34586389E-02	0.34566346E-02	0.34544778E-02
SOLT	-0.88540551E 04	-0.90244684E 04	-0.92090222E 04	-0.94096630E 04	-0.96287312E 04	-0.98690708E 04
SOLHT	-0.10577227E 04	-0.11241419E 04	-0.12001218E 04	-0.12877927E 04	-0.13899552E 04	-0.15103621E 04
SOFT	0.42952079E 05	0.42931870E 05	0.42910267E 05	0.42887122E 05	0.42862270E 05	0.42835525E 05
EOLT	-0.32644515E-03	-0.32807496E-03	-0.32981717E-03	-0.33168370E-03	-0.33368792E-03	-0.33584477E-03
EOLHT	-0.19892748E-03	-0.19917994E-03	-0.19950260E-03	-0.19991458E-03	-0.20044172E-03	-0.20111936E-03
EOFT	0.34638773E-02	0.34622476E-02	0.34605054E-02	0.34586389E-02	0.34566346E-02	0.34544778E-02
SBL	0.12554226E 06	0.12552904E 06	0.12551464E 06	0.12549885E 06	0.12548145E 06	0.12546214E 06
SBLH	0.12589071E 06	0.12588705E 06	0.12588286E 06	0.12587795E 06	0.12587218E 06	0.12586529E 06
SFD	0.32837854E 06	0.32827816E 06	0.32816924E 06	0.32805062E 06	0.32792089E 06	0.32777821E 06
EDL	0.22691819E-01	0.22683724E-01	0.22674940E-01	0.22665375E-01	0.22654912E-01	0.22643409E-01
EDLH	0.22911466E-01	0.22916453E-01	0.22921793E-01	0.22927473E-01	0.22933536E-01	0.22939984E-01
EFD	0.26482140E-01	0.26474045E-01	0.26465261E-01	0.26455695E-01	0.26445233E-01	0.26433727E-01

SAMPLE CASE NO. 2, TITANIUM METAL-SHELL

137

DESIGN DATA FOR BALANCED IN PLANE WRAP CONTOUR

CONTOUR INPUT DATA ABIG = 0.239793 C = 0.000004 V LEN = 16.681069

	73	74	75	76	77	78
Z	0.56160006E 00	0.54254171E 00	0.52230149E 00	0.50070307E 00	0.47752083E 00	0.45245877E 00
U	0.71999971E 00	0.72999970E 00	0.73999969E 00	0.74999968E 00	0.75999967E 00	0.76999966E 00
PHI	0.28371372E 02	0.27003393E 02	0.25584215E 02	0.24107203E 02	0.22564364E 02	0.20946045E 02
ALPHA	0.21999650E 02	0.22721456E 02	0.23553195E 02	0.24525083E 02	0.25680380E 02	0.27083619E 02
THETA	0.72095406E 02	0.71176604E 02	0.70138556E 02	0.68949464E 02	0.67564039E 02	0.65915072E 02
R ONE	0.89693762E 01	0.90616567E 01	0.91699635E 01	0.92993537E 01	0.94574523E 01	0.96564348E 01
R TWO	0.11818569E 02	0.11949123E 02	0.12094872E 02	0.12258761E 02	0.12444483E 02	0.12656596E 02
T	0.39724200E-01	0.41333279E-01	0.43202186E-01	0.45408040E-01	0.48064392E-01	0.51346737E-01
X	0.56160006E 01	0.54254171E 01	0.52230148E 01	0.50070307E 01	0.47752083E 01	0.45245877E 01
Y	0.71999971E 01	0.72999970E 01	0.73999969E 01	0.74999968E 01	0.75999967E 01	0.76999966E 01
XFO	0.56254387E 01	0.54348006E 01	0.52323430E 01	0.50163040E 01	0.47844299E 01	0.45337656E 01
YFO	0.72174734E 01	0.73184105E 01	0.74194800E 01	0.75207206E 01	0.76221892E 01	0.77239734E 01
XFI	0.56065624E 01	0.54160336E 01	0.52136866E 01	0.49977574E 01	0.47659866E 01	0.45154097E 01
YFI	0.71825206E 01	0.72815834E 01	0.73805137E 01	0.74792729E 01	0.75778041E 01	0.76760197E 01
XM	0.55604315E 01	0.53719550E 01	0.51717639E 01	0.49581055E 01	0.47287350E 01	0.44807047E 01
YM	0.70971013E 01	0.71950871E 01	0.72929522E 01	0.73906599E 01	0.74881557E 01	0.75853550E 01
SOL	-0.33812152E 04	-0.36269806E 04	-0.39018846E 04	-0.42117078E 04	-0.45637589E 04	-0.49671951E 04
SOLH	0.34689225E 04	0.33266129E 04	0.31506526E 04	0.29281653E 04	0.26389811E 04	0.22497781E 04
SOF	0.47000000E 05	0.47000000E 05	0.47000000E 05	0.47000000E 05	0.47000000E 05	0.47000000E 05
EOL	0.00000000E-38	0.00000000E-38	0.00000000E-38	0.00000000E-38	0.00000000E-38	0.00000000E-38
EOLH	0.00000000E-38	0.00000000E-38	0.00000000E-38	0.00000000E-38	0.00000000E-38	0.00000000E-38
EOF	0.37903226E-02	0.37903226E-02	0.37903226E-02	0.37903226E-02	0.37903226E-02	0.37903226E-02
SOLP	-0.10134169E 05	-0.10428345E 05	-0.10757004E 05	-0.11126966E 05	-0.11546871E 05	-0.12027606E 05
SOLHP	-0.16541537E 04	-0.18285508E 04	-0.20440060E 04	-0.23161978E 04	-0.26696805E 04	-0.31450272E 04
SOFP	0.42806682E 05	0.42775526E 05	0.42741843E 05	0.42705463E 05	0.42666353E 05	0.42624845E 05
EOLP	-0.33817072E-03	-0.34068332E-03	-0.34339971E-03	-0.34633360E-03	-0.34948753E-03	-0.35283502E-03
EOLHP	-0.20199709E-03	-0.20314587E-03	-0.20467086E-03	-0.20673303E-03	-0.20958991E-03	-0.21367640E-03
EOFP	0.34521518E-02	0.34496392E-02	0.34469228E-02	0.34439890E-02	0.34408349E-02	0.34374875E-02
SOLT	-0.10134169E 05	-0.10428345E 05	-0.10757004E 05	-0.11126966E 05	-0.11546871E 05	-0.12027606E 05
SOLHT	-0.16541537E 04	-0.18285508E 04	-0.20440060E 04	-0.23161978E 04	-0.26696805E 04	-0.31450272E 04
SOFT	0.42806682E 05	0.42775526E 05	0.42741843E 05	0.42705463E 05	0.42666353E 05	0.42624845E 05
EOLT	-0.33817072E-03	-0.34068332E-03	-0.34339971E-03	-0.34633360E-03	-0.34948753E-03	-0.35283502E-03
EOLHT	-0.20199709E-03	-0.20314587E-03	-0.20467086E-03	-0.20673303E-03	-0.20958991E-03	-0.21367640E-03
EOFT	0.34521518E-02	0.34496392E-02	0.34469228E-02	0.34439890E-02	0.34408349E-02	0.34374875E-02
SBL	0.12544057E 06	0.12541625E 06	0.12538854E 06	0.12535656E 06	0.12531904E 06	0.12527406E 06
SBLH	0.12585698E 06	0.12584674E 06	0.12583388E 06	0.12581735E 06	0.12579540E 06	0.12576505E 06
SFD	0.32762041E 06	0.32744477E 06	0.32724773E 06	0.32702474E 06	0.32676988E 06	0.32647511E 06
EDL	0.22630679E-01	0.22616514E-01	0.22600625E-01	0.22582642E-01	0.22562093E-01	0.22538319E-01
EDLH	0.22946854E-01	0.22954089E-01	0.22961631E-01	0.22969323E-01	0.22976733E-01	0.22982990E-01
EFD	0.26421000E-01	0.26406836E-01	0.26390946E-01	0.26372963E-01	0.26352410E-01	0.26328638E-01

DESIGN DATA FOR BALANCED IN PLANE WRAP CONTOUR

CONTOUR INPUT DATA ABIG = 0.239793 C = 0.000004 V LEN = 16.681069

	79	80	81	82	83	84
Z	0.42511728E 00	0.41042548E 00	0.39493755E 00	0.37854350E 00	0.36110826E 00	0.34246480E 00
U	0.77999965E 00	0.78499963E 00	0.78999963E 00	0.79499962E 00	0.79999962E 00	0.80499961E 00
PHI	0.19240702E 02	0.18351305E 02	0.17435159E 02	0.16490753E 02	0.15517161E 02	0.14514925E 02
ALPHA	0.28836152E 02	0.29892388E 02	0.31108183E 02	0.32527352E 02	0.34212379E 02	0.36255861E 02
THETA	0.63897563E 02	0.62700080E 02	0.61336110E 02	0.59760769E 02	0.57910216E 02	0.55690073E 02
R ONE	0.99172846E 01	0.10082170E 02	0.10280267E 02	0.10524509E 02	0.10836250E 02	0.11253878E 02
R TWO	0.12900429E 02	0.13035904E 02	0.13181009E 02	0.13335546E 02	0.13498017E 02	0.13664043E 02
T	0.55543737E-01	0.58131878E-01	0.61171476E-01	0.64809157E-01	0.69267216E-01	0.74901632E-01
X	0.42511727E 01	0.41042548E 01	0.39493755E 01	0.37854350E 01	0.36110826E 01	0.34246480E 01
Y	0.77999965E 01	0.78499963E 01	0.78999962E 01	0.79499962E 01	0.79999961E 01	0.80499960E 01
XFO	0.42603245E 01	0.41134059E 01	0.39585398E 01	0.37946333E 01	0.36203480E 01	0.34340343E 01
YFO	0.78262171E 01	0.78775840E 01	0.79291767E 01	0.79810678E 01	0.80333673E 01	0.80862514E 01
XFI	0.42420208E 01	0.40951036E 01	0.39402112E 01	0.37762366E 01	0.36018172E 01	0.34152616E 01
YFI	0.77737759E 01	0.78224085E 01	0.78708156E 01	0.79189245E 01	0.79666249E 01	0.80137405E 01
XM	0.42100294E 01	0.40645387E 01	0.39111235E 01	0.37486794E 01	0.35758457E 01	0.33909302E 01
YM	0.76821185E 01	0.77302656E 01	0.77781959E 01	0.78258379E 01	0.78730834E 01	0.79197591E 01
SOL	-0.54329979E 04	-0.56929018E 04	-0.59723149E 04	-0.62713132E 04	-0.65877127E 04	-0.69142087E 04
SOLH	0.17016522E 04	0.13360954E 04	0.88076830E 03	0.30022853E 03	-0.46156255E 03	-0.14981644E 04
SOF	0.47000000E 05	0.47000000E 05	0.47000000E 05	0.47000000E 05	0.47000000E 05	0.47000000E 05
EOL	0.00000000E-38	0.00000000E-38	0.00000000E-38	0.00000000E-38	0.00000000E-38	0.00000000E-38
EOLH	0.00000000E-38	0.00000000E-38	0.00000000E-38	0.00000000E-38	0.00000000E-38	0.00000000E-38
EOF	0.37903226E-02	0.37903226E-02	0.37903226E-02	0.37903226E-02	0.37903226E-02	0.37903226E-02
SOLP	-0.12582388E 05	-0.12892017E 05	-0.13225162E 05	-0.13582279E 05	-0.13961468E 05	-0.14355405E 05
SOLHP	-0.38140047E 04	-0.42600083E 04	-0.48155043E 04	-0.55238755E 04	-0.64538945E 04	-0.77208173E 04
SOFP	0.42582183E 05	0.42561388E 05	0.42542042E 05	0.42525716E 05	0.42515186E 05	0.42515588E 05
EOLP	-0.35627556E-03	-0.35795256E-03	-0.35951271E-03	-0.36082937E-03	-0.36167854E-03	-0.36164603E-03
EOLHP	-0.21977979E-03	-0.22402352E-03	-0.22946339E-03	-0.23660446E-03	-0.24626284E-03	-0.25983871E-03
EOFP	0.34340470E-02	0.34323700E-02	0.34308098E-02	0.34294932E-02	0.34286440E-02	0.34286765E-02
SOLT	-0.12582388E 05	-0.12892017E 05	-0.13225162E 05	-0.13582279E 05	-0.13961468E 05	-0.14355405E 05
SOLHT	-0.38140047E 04	-0.42600083E 04	-0.48155043E 04	-0.55238755E 04	-0.64538945E 04	-0.77208173E 04
SOFT	0.42582183E 05	0.42561388E 05	0.42542042E 05	0.42525716E 05	0.42515186E 05	0.42515588E 05
EOLT	-0.35627556E-03	-0.35795256E-03	-0.35951271E-03	-0.36082937E-03	-0.36167854E-03	-0.36164603E-03
EOLHT	-0.21977979E-03	-0.22402352E-03	-0.22946339E-03	-0.23660446E-03	-0.24626284E-03	-0.25983871E-03
EOFT	0.34340470E-02	0.34323700E-02	0.34308098E-02	0.34294932E-02	0.34286440E-02	0.34286765E-02
SBL	0.12521856E 06	0.12518531E 06	0.12514704E 06	0.12510213E 06	0.12504793E 06	0.12497973E 06
SBLH	0.12572082E 06	0.12569034E 06	0.12565124E 06	0.12559957E 06	0.12552843E 06	0.12542499E 06
SFD	0.32612967E 06	0.32593359E 06	0.32571938E 06	0.32548511E 06	0.32522985E 06	0.32495583E 06
EDL	0.22510459E-01	0.22494648E-01	0.22477371E-01	0.22458480E-01	0.22437891E-01	0.22415796E-01
EDLH	0.22986033E-01	0.22984964E-01	0.22980635E-01	0.22970833E-01	0.22951319E-01	0.22913338E-01
EFD	0.26300780E-01	0.26284966E-01	0.26267692E-01	0.26248799E-01	0.26228213E-01	0.26206115E-01

SAMPLE CASE NO. 2, TITANIUM METAL-SHELL

139

DESIGN DATA FOR BALANCED IN PLANE WRAP CONTOUR

CONTOUR INPUT DATA ABIG = 0.239793 C = 0.000004 V LEN 16.681069

	85	86	87	88	89	90
Z	0.32240655E 00	0.30068339E 00	0.27701824E 00	0.25121500E 00	0.22863656E 00	0.19999708E 00
U	0.80999961E 00	0.81499960E 00	0.81999960E 00	0.82499959E 00	0.82910978E 00	0.83402526E 00
PHI	0.13488114E 02	0.12449429E 02	0.11434576E 02	0.10551132E 02	0.10183886E 02	0.90819637E 01
ALPHA	0.38801729E 02	0.42087676E 02	0.46538936E 02	0.53007672E 02	0.61202287E 02	0.90000031E 02
THETA	0.52953987E 02	0.49460756E 02	0.44779525E 02	0.38047157E 02	0.29589829E 02	0.00000000E-38
R ONE	0.11855034E 02	0.12826687E 02	0.14769870E 02	0.21262558E 02	0.12931356E 02	0.12670299E 02
R TWO	0.13822741E 02	0.13947793E 02	0.13973262E 02	0.13719134E 02	0.12931356E 02	0.12670299E 02
T	0.82324672E-01	0.92696976E-01	0.10855248E 00	0.13684144E 00	0.18780614E 00	0.18780614E 00
X	0.32240655E 01	0.30068339E 01	0.27701824E 01	0.25121500E 01	0.22863655E 01	0.19999708E 01
Y	0.80999960E 01	0.81499959E 01	0.81999959E 01	0.82499958E 01	0.82910978E 01	0.83402525E 01
XFO	0.32336664E 01	0.30168256E 01	0.27809426E 01	0.25246787E 01	0.23029683E 01	0.20147932E 01
YFO	0.81400229E 01	0.81952546E 01	0.82531948E 01	0.83172597E 01	0.83835213E 01	0.84329783E 01
XFI	0.32144646E 01	0.29968422E 01	0.27594222E 01	0.24996213E 01	0.22697627E 01	0.19851485E 01
YFI	0.80599689E 01	0.81047372E 01	0.81467968E 01	0.81827319E 01	0.81986741E 01	0.82475266E 01
XM	0.31918214E 01	0.29759139E 01	0.27401762E 01	0.24818447E 01	0.22525982E 01	0.19698247E 01
YM	0.79655666E 01	0.80099399E 01	0.80516437E 01	0.80872934E 01	0.81031235E 01	0.81516637E 01
SOL	-0.72317316E 04	-0.74929385E 04	-0.75772054E 04	-0.71513540E 04	-0.57248143E 04	0.83038383E 04
SOLH	-0.29770170E 04	-0.52267714E 04	-0.89823378E 04	-0.16262572E 05	-0.38517081E 05	-0.73749476E 12
SOF	0.47000000E 05	0.47000000E 05	0.47000000E 05	0.47000000E 05	0.47000000E 05	0.47000000E 05
EOL	0.00000000E-38	0.00000000E-38	0.00000000E-38	0.00000000E-38	0.00000000E-38	0.00000000E-38
EOLH	0.00000000E-38	0.00000000E-38	0.00000000E-38	0.00000000E-38	0.00000000E-38	0.00000000E-38
EOF	0.37903226E-02	0.37903226E-02	0.37903226E-02	0.37903226E-02	0.37903226E-02	0.37903226E-02
SOLP	-0.14744193E 05	-0.15077566E 05	-0.15226350E 05	-0.14832727E 05	-0.12764441E 05	-0.14400371E 02
SOLHP	-0.95321060E 04	-0.12298641E 05	-0.16953302E 05	-0.26134016E 05	-0.42238576E 05	-0.21617446E 11
SOFP	0.42537031E 05	0.42601259E 05	0.42761831E 05	0.43184561E 05	0.42246571E 05	0.16603870E 11
EOLP	-0.35991675E-03	-0.35473718E-03	-0.34178776E-03	-0.30769661E-03	-0.38334103E-03	-0.13624762E 05
EOLHP	-0.27992987E-03	-0.31189705E-03	-0.36867526E-03	-0.49067345E-03	-0.10611644E-03	0.46185633E 05
EOFP	0.34304057E-02	0.34355854E-02	0.34485347E-02	0.34826259E-02	0.34069815E-02	0.13390218E 04
SOLT	-0.14744193E 05	-0.15077566E 05	-0.15226350E 05	-0.14832727E 05	-0.12764441E 05	-0.14400371E 02
SOLHT	-0.95321060E 04	-0.12298641E 05	-0.16953302E 05	-0.26134016E 05	-0.42238576E 05	-0.21617446E 11
SOFT	0.42537031E 05	0.42601259E 05	0.42761831E 05	0.43184561E 05	0.42246571E 05	0.16603870E 11
EOLT	-0.35991675E-03	-0.35473718E-03	-0.34178776E-03	-0.30769661E-03	-0.38334103E-03	-0.13624762E 05
EOLHT	-0.27992987E-03	-0.31189705E-03	-0.36867526E-03	-0.49067345E-03	-0.10611644E-03	0.46185633E 05
EOFT	0.34304057E-02	0.34355854E-02	0.34485347E-02	0.34826259E-02	0.34069815E-02	0.13390218E 04
SBL	0.12488789E 06	0.12474740E 06	0.12446352E 06	0.12304106E 06	0.11183752E 06	0.21784999E 06
SBLH	0.12526227E 06	0.12497127E 06	0.12430310E 06	0.12084630E 06	-0.14280482E 06	0.32710796E 12
SFD	0.32467586E 06	0.32444240E 06	0.32450891E 06	0.32784654E 06	0.36499004E 06	-0.25124404E 12
EDL	0.22393215E-01	0.22374388E-01	0.22379751E-01	0.22648914E-01	0.25644369E-01	-0.24668741E 06
EDLH	0.22836569E-01	0.22662716E-01	0.22154864E-01	0.18727152E-01	-0.17159715E-01	0.51288301E 06
EFD	0.26183537E-01	0.26164709E-01	0.26170073E-01	0.26439236E-01	0.29434680E-01	-0.20261616E 05

140

HEAD PROPERTIES

ARC LENGTH = 0.14815267E 02

SURFACE AREA = 0.57581123E 03

CONTAINED VOLUME = 0.17618785E 04

WT. OF LINER = 0.86683311E 01

WT. OF FILAMENTS = 0.13863431E 01

WT. OF HEAD = 0.10054674E 02

141

VESSEL PROPERTIES

TOTAL ARC LENGTH = 0.29630534E 02

TOTAL SURFACE AREA = 0.11516225E 04

TOTAL CONTAINED VOLUME = 0.35237570E 04

TOTAL WEIGHT = 0.20109349E 02

PERFORMANCE FACTOR = 0.58439135E 06

NO CYLINDER ALL CYLINDER STRESSES NON-EXISTENT.

142

278

```
END-OF-FILE READING ON SYSTEM INPUT TAPE.
RETURNING TO SYSTEM.
```

143

279

144

```
048   LINES OUTPUT.
ELAPSED TIME THIS JOB--002.04 MINUTES.
```