CASE FILE
COPY

A Reproduced Copy

OF

N67-15676

Reproduced for NASA

by the

NASA Scientific and Technical Information Facility

FFNo 672 Aug 65

NASA CR 65570

GPO PRICE $ _____

CFSTI PRICE(S) $ _____

Hard copy (HC) 3.00

Microfiche (MF) .65

ff 653 July 65

FACILITY FORM 602

N67-15676 (ACCESSION NUMBER)

(THRU)

58 (PAGES)

N 0 (CODE)

(NASA CR OR TMX OR AD NUMBER)

07 (CATEGORY)

TABLE OF CONTENTS

Section		Page
I.	PROGRAM OBJECTIVES	1
II.	GENERAL DESIGN APPROACH	1
III.	DETAILED DESIGN APPROACH	2
	A. PM Transmitter	2
	B. PM Test Receiver	4
	C. FM Test Receiver	6
	D. RF Translator	6
	E. Ranging Subsystem	8
	F. PM/FM Tracking Receiver	9
	G. Other Units	12
IV.	PROBLEM AREAS	12
V.	TEST RESULTS	15
VI.	CONCLUSIONS	15

APPENDICES

APPENDIX I - UNIT I TEST RESULTS

APPENDIX II - UNIT II AND III TEST RESULTS

LIST OF ILLUSTRATIONS

Figure No.		Page
1	Equipment Rack Layout	3
2	VCO Schematic	5
3	PM Receiver Local Oscillator Multiplier Chain	7
4	Unit I (PM/FM Receiver), Block Diagram	10
5	Cross Correlation Functional Block Diagram	13

REPORT

PREPARED BY:

W. E. Michel, Project Leader

APPROVED BY:

R. J. Solem, Section Head
RF Systems Section

R. J. Coles, Program Manager

PREPARED FOR

NASA/Manned Spacecraft Center
Houston, Texas

FINAL REPORT

S-BAND LABORATORY TEST EQUIPMENT

CONTRACT NO. NAS 9-5939

December 6, 1966

LIBRARY COPY
JAN 10 1967
MANNED SPACECRAFT CENTER
HOUSTON, TEXAS

MOTOROLA INC.
Military Electronics Division
WESTERN CENTER
8201 EAST McDOWELL ROAD, SCOTTSDALE, ARIZONA

I. PROGRAM OBJECTIVES

The S-Band Transponder Laboratory Test Equipment combines elements of the Apollo Block II STE with a high performance monopulse tracking receiver. The Block II STE is specifically designed for making highly accurate measurements of transponder performance. The PM/FM ground receiver is similar to a monopulse receiver built by Motorola for the Space-Ground Link System (SGLS). This program, therefore, drew heavily on the designs and documents of past programs. The program which was undertaken can be summarized in the following activities:

(1) documentation organization and cleanup

(2) new module design

(3) parts procurement

(4) fabrication

(5) assembly

(6) test.

II. GENERAL DESIGN APPROACH

The approach used to develop equipment to meet the requirements of this contract was to build as much of the existing design as possible with a minimum of modification, and develop new modules where needed to add the required flexibility. Modifications to the existing design can be summarized as follows:

(1) PM Transmitter: Re-design the VCO module to permit 2 or 3 frequency operation.

(2) PM Test Receiver: Re-design the VCO to permit 4 frequency operation.

(3) FM Test Receiver: Add an S-band local oscillator to permit 2 frequency operation.

(4) RF Translator: Re-design the oscillator to permit 3 frequency operation.

(5) Ranging Subsystem: Re-design filters and add switchable phase shifters to permit operation on LEM and CSM frequencies.

(6) PM/FM Tracking Receiver: Re-design the local oscillator chain to permit reception of frequencies in the range of 2090 MHz to 2300 MHz. Also, the circuitry in this unit was re-packaged in the new cordwood encapsulated RF modules.

The equipment was packaged in five equipment racks as shown in Figure 1. The equipment rack layout is of necessity different from previous designs.

III. DETAILED DESIGN APPROACH

A. PM Transmitter

The PM transmitter had a requirement for five output frequencies:

2106.4 MHz

2101.8 MHz

2097.6 MHz

2277.9 MHz

2278.8 MHz

To accommodate the five frequencies, two separate transmitter drawers were built. One drawer provided the three lower frequencies and the other drawer provided the two

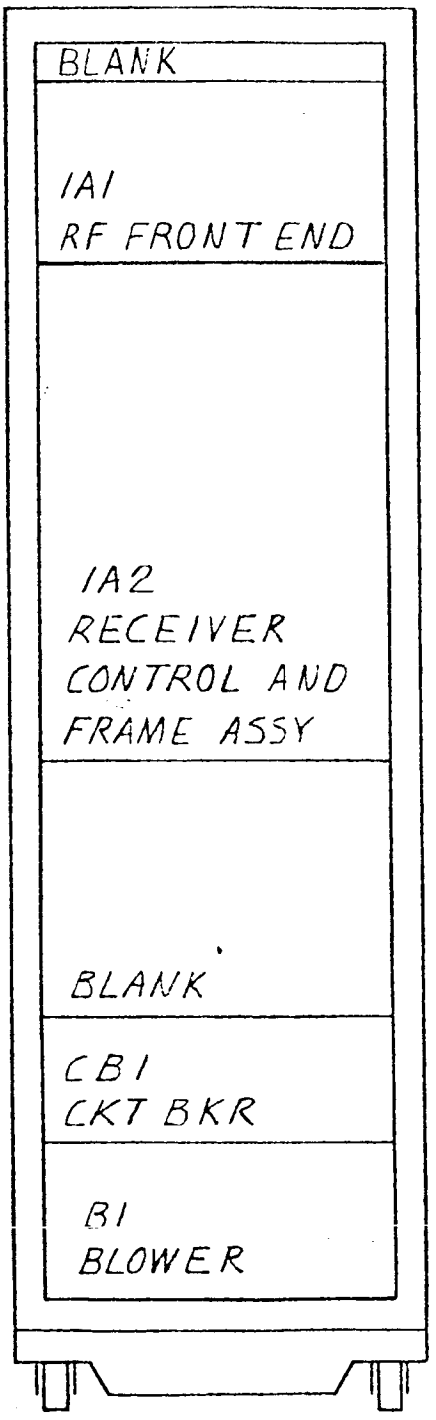

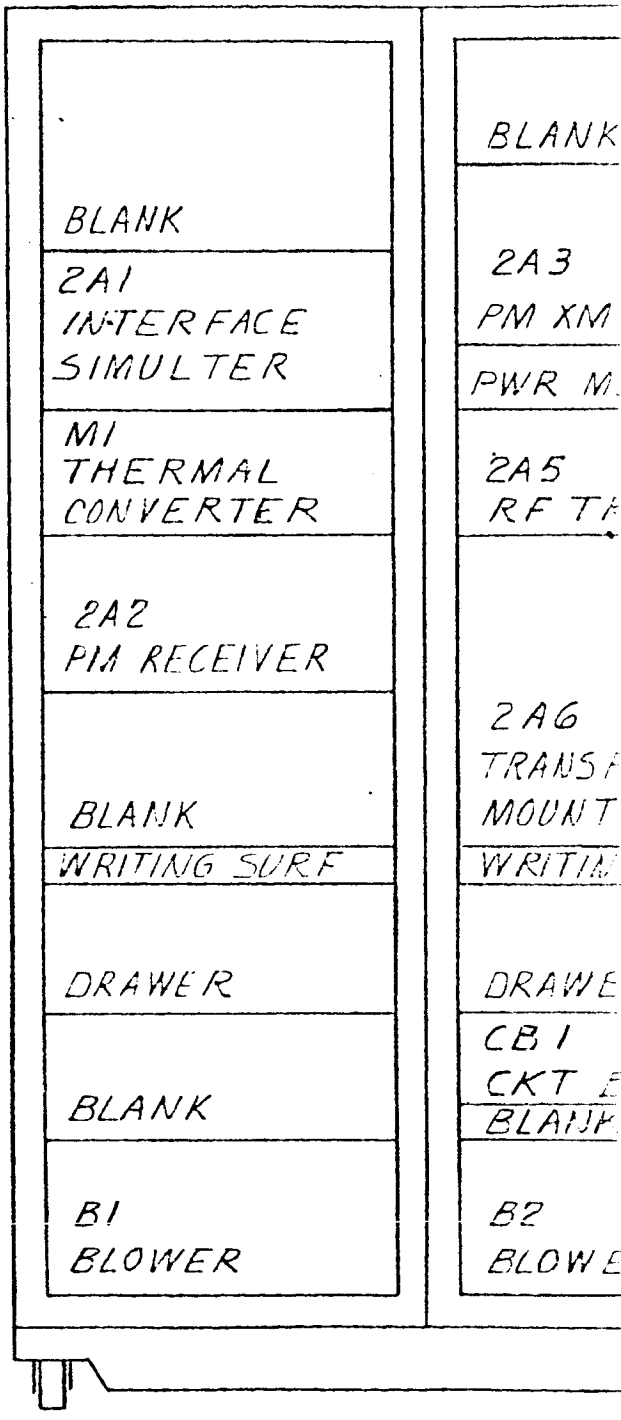

FIGU

EQUIPMENT

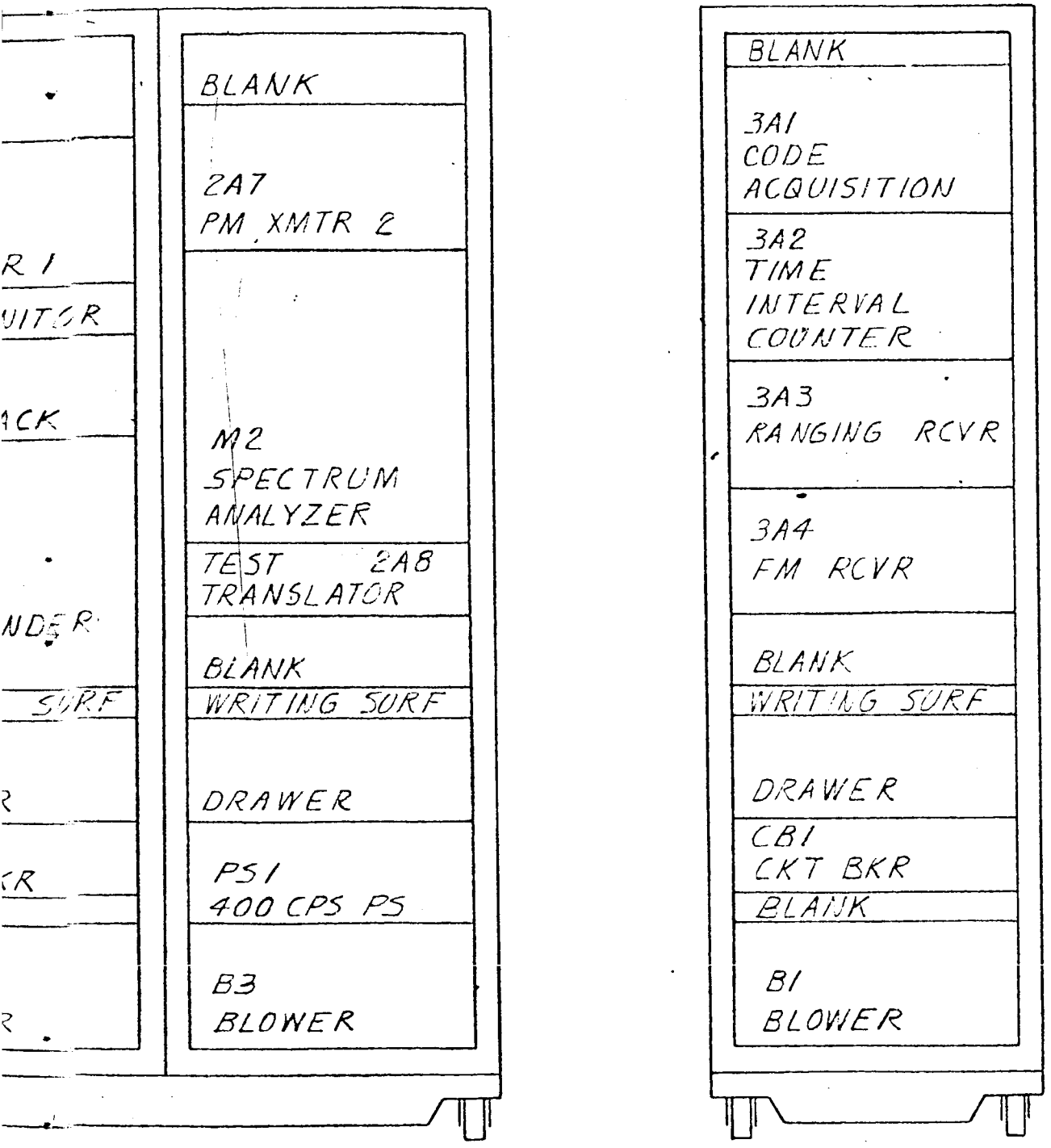

E 1

RACK LAYOUT

higher frequencies. The modification to the drawer required the addition of a front panel switch for frequency selection, a slight addition of a front panel switch for frequency selection, a slight addition to interconnect wiring and a new VCO module.

The VCO module was built using the same mechanical packaging as was used in the previous units, and therefore much greater component density was required. To achieve the high component density, an RF cordwood encapsulated module was used. The cordwood module provided the active portion of the oscillators. The passive elements, including inductors, capacitors, varicaps and crystals, were wired in a standard point-to-point manner. A schematic of the VCO is shown in Figure 2.

The VCO module for the low frequency PM transmitter contained three such VCO's plus selection circuitry to permit frequency selection by the front panel switch. The VCO module for the high frequency PM transmitter contained two VCO's.

B. PM Test Receiver

The PM Test Receiver was to be identical to the previous design except that three VCO's were to be added to obtain four frequency operation. Because of space limitations it was not possible to simply add the three VCO's. The approach used was to replace the cavity type varactor multiplier used in the existing design with a stripline step recovery diode multiplier. Also the multiplier driver circuitry was re-designed.

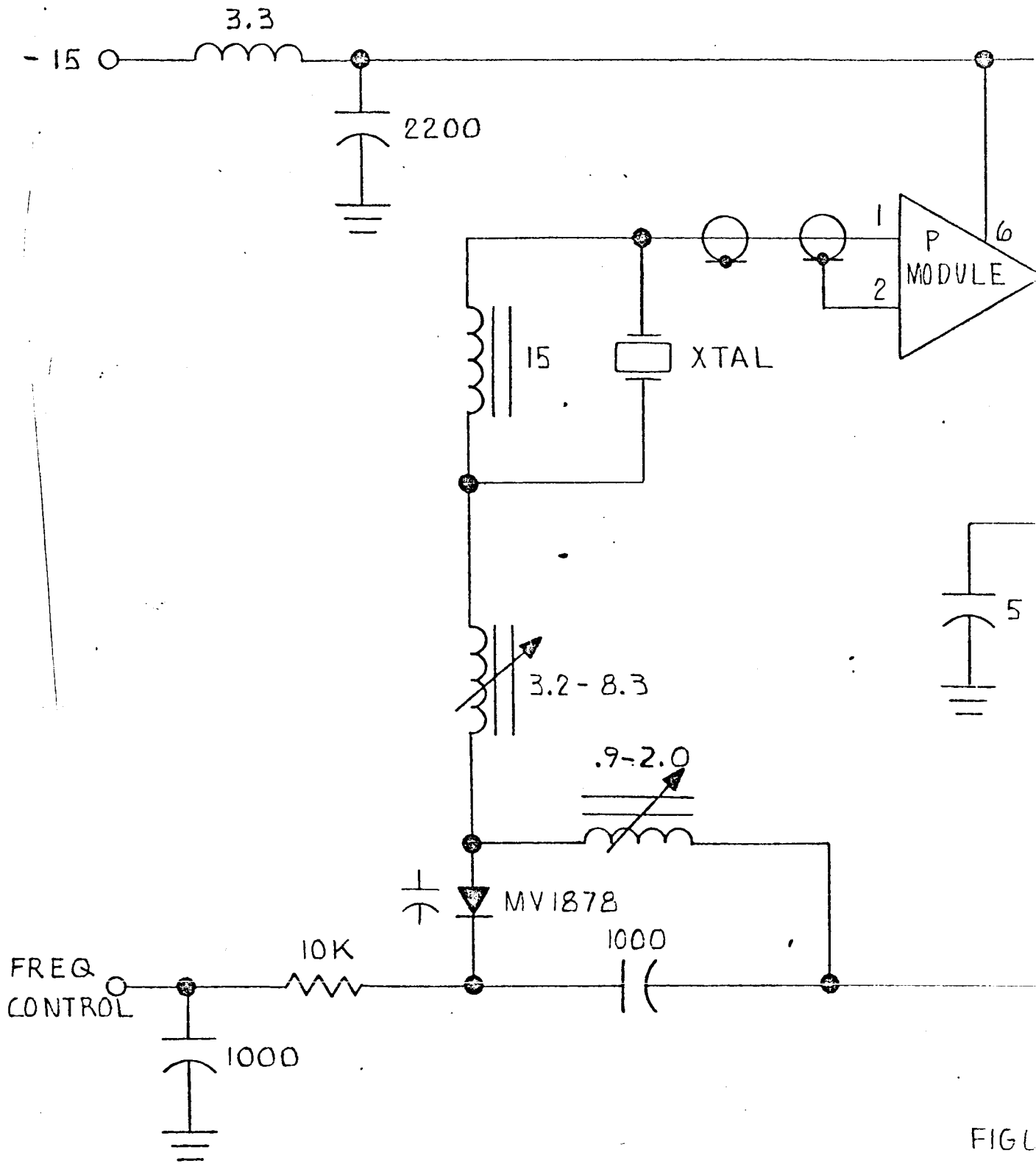
3.3
-15
2200
1
6
P
MODULE
2
15
XTAL
5
3.2 - 8.3
.9-2.0
MV1878
1000
10K
FREQ
CONTROL
1000

FIGU
VCO SC

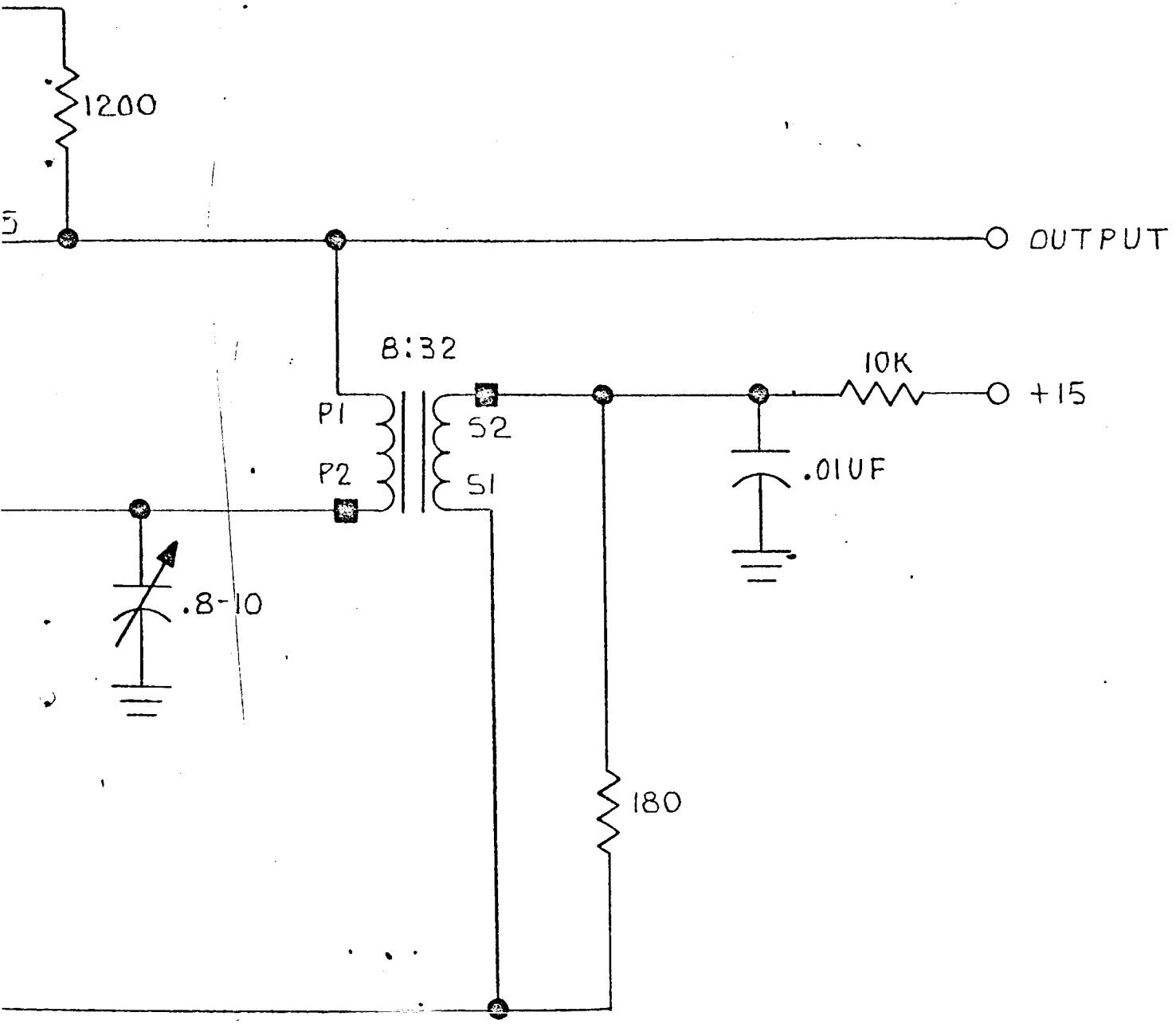

RE 2
HEMATIC

The re-designed circuitry was packaged in three modules with the standard form factor of 1" thick and 9" long and would fit into the available space.

The modular breakdown is:

(1) Quad VCO and X3 Multiplier

(2) X4 Multiplier and Power Amplifier

(3) X8 Multiplier (Step Recovery Diode).

The Quad VCO used the same circuit as was used in the test transmitter. Four oscillators are used and selected by a front panel switch through diode gates contained in the module.

The selected oscillator frequency is tripled and amplified and fed to the X4 Multiplier and Power Amplifier. A block diagram of the local oscillator circuits is shown in Figure 3.

C. FM Test Receiver

The FM Test Receiver was modified to operate at two frequencies by the addition of a front panel switch, an S-band oscillator and a coaxial relay.

All of the added items were purchased and no development effort was required. The purchased S-band oscillator requires a special power control circuit; the existing unit was modified by addition of a relay and some DC components to permit two oscillator operation.

D. RF Translator

The existing translator design contained capability for two different translation frequencies. The requirements for

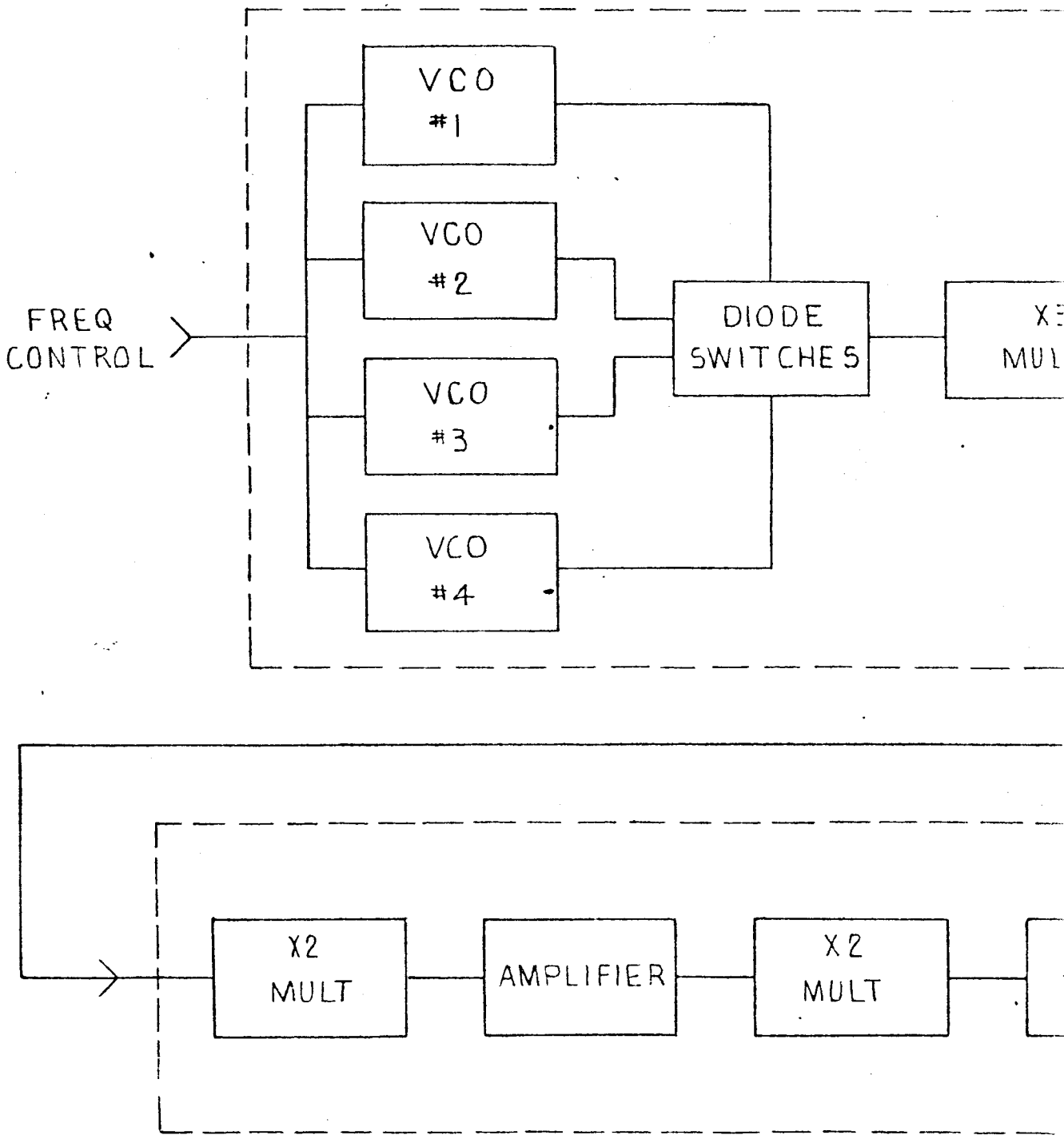

FIGU

PM RE
LOCAL OSC. N

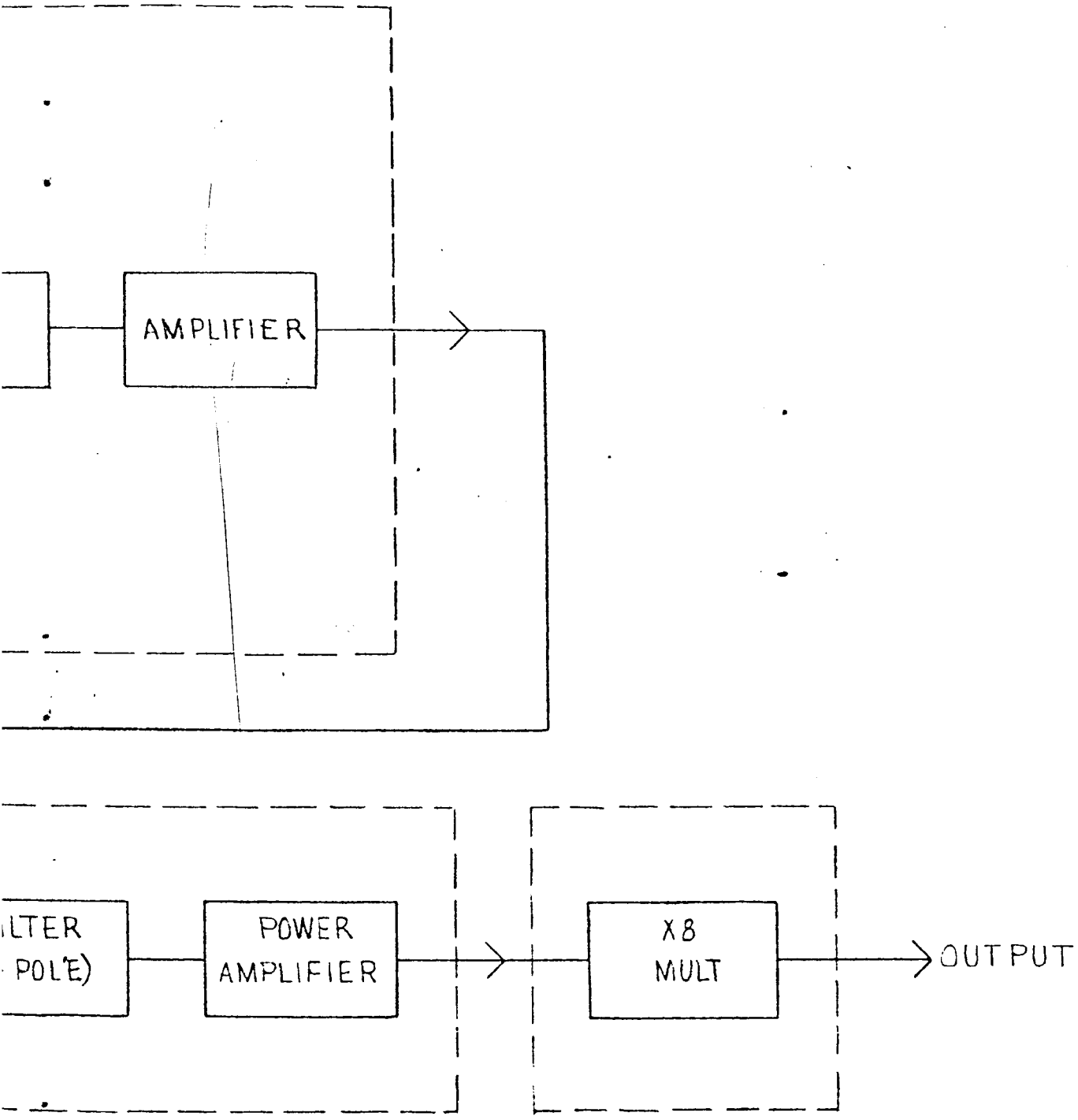

E 3

EIVER
ULT. CHAIN

three translation frequencies required the addition of an oscillator. In order to modify only the oscillator module, the design was simplified to give a higher functional density.

The existing design contained two oscillators in the 45 MHz range and a X4 frequency multiplier. Frequency selection was accomplished by a front panel switch through a relay contained in the oscillator module.

The new design contains three oscillators in 90 MHz range and a X2 frequency multiplier. Frequency selection is accomplished by diode switches.

E. Ranging Subsystem

The ranging subsystem consists of three drawers. The drawers are:

(1) Code Acquisition Drawer

(2) Time Interval Counter Drawer

(3) Ranging Receiver Drawer.

The code acquisition and time interval counter drawers were built with no modification. The ranging receiver drawer which was used was a modified version of a ranging receiver built for a test set other than the Apollo Block II test set. The advantage of the ranging receiver which was used was that it could interface directly with PM/FM tracking receiver as well as the PM test receiver. The ranging receiver also had an improved AGC system which eliminated the sometimes unreliable relays which were used on the Apollo Block II test set.

The modification required to permit using the unit with CSM or LEM frequencies was the addition of a front panel switch and a module containing switchable phase shifters; it was also necessary to increase the phase tracking range on the crystal filters. Rephasing is required on three of the 498 KHz reference signals when the frequency changeover is made.

F. PM/FM Tracking Receiver

The PM/FM Tracking Receiver was to be a copy of the existing SGLS receiver design. Since better approaches had been developed for packaging for receivers of this type, it was decided that the new equipment should reflect the latest techniques. The new techniques have evolved from the use of cordwood encapsulated RF modules. The modules are called "P" modules as an abbreviation for potted modules and contain several types of standard circuits.

A block diagram of the receiver is shown in Figure 4. The "P" modules are indicated by the symbol "P" on the block; 102 "P" modules are used on the receiver. The standard "P" module circuits used on this receiver consist of the following types:

(1) Amplifier, Variable Gain

(2) Amplifier, Power

(3) Phase Detector

(4) Limiter, Broadband

(5) Mixer

(6) Amplifier, Compensation

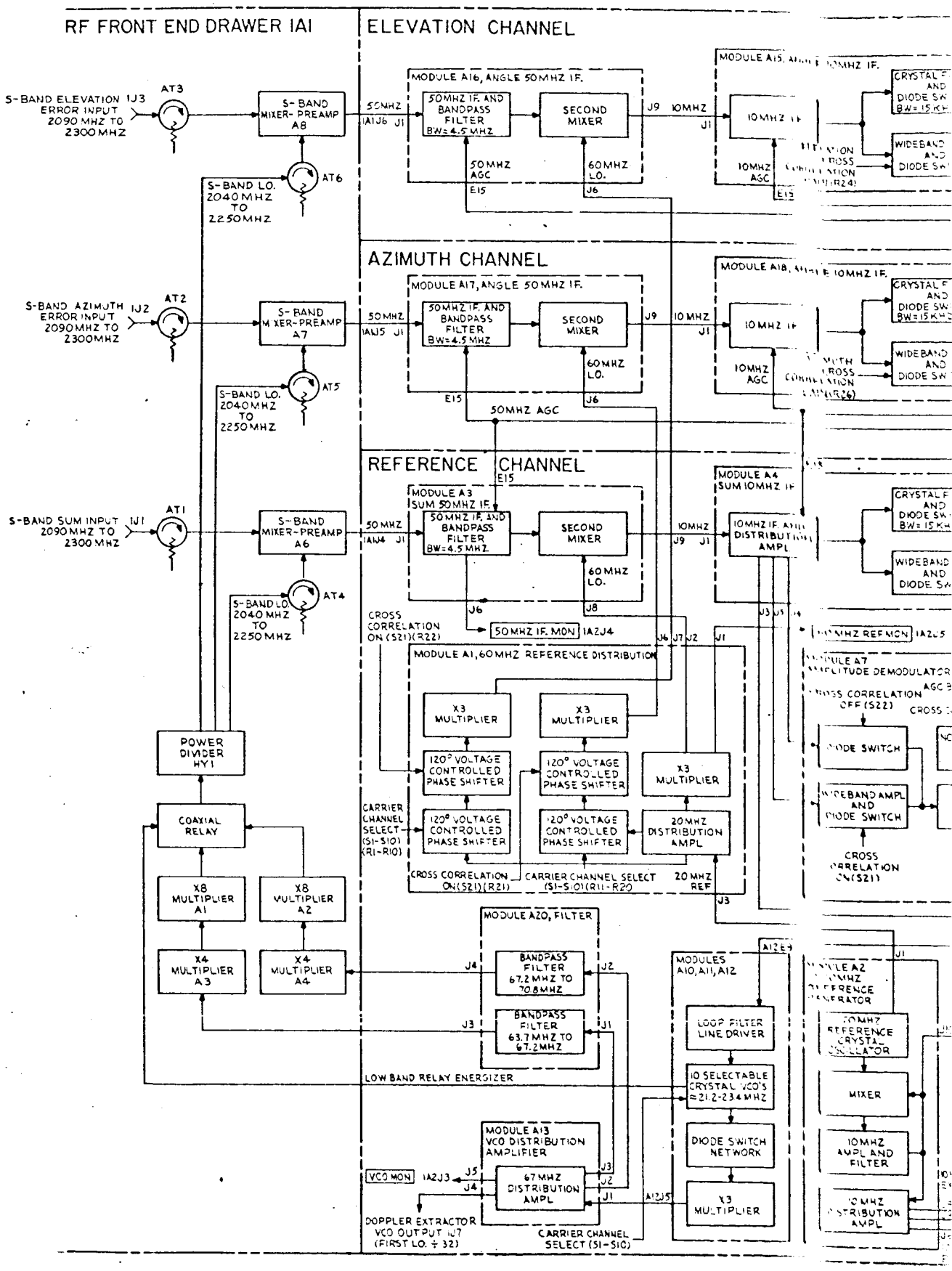
RF FRONT END DRAWER 1A1
ELEVATION CHANNEL
AZIMUTH CHANNEL
REFERENCE CHANNEL
S-BAND ELEVATION ERROR INPUT 2090 MHZ TO 2300 MHZ
S-BAND AZIMUTH ERROR INPUT 2090 MHZ TO 2300 MHZ
S-BAND SUM INPUT 2090 MHZ TO 2300 MHZ
S-BAND MIXER-PREAMP A8
S-BAND MIXER-PREAMP A7
S-BAND MIXER-PREAMP A6
S-BAND LO. 2040 MHZ TO 2250 MHZ
MODULE A16, ANGLE 50 MHZ IF.
MODULE A17, ANGLE 50 MHZ IF.
MODULE A3 SUM 50 MHZ IF.
50 MHZ IF. AND BANDPASS FILTER BW=4.5 MHZ
SECOND MIXER
60 MHZ LO.
50 MHZ AGC
10 MHZ IF
10 MHZ AGC
MODULE A4 SUM 10 MHZ IF
10 MHZ IF. AND DISTRIBUTION AMPL
CROSS CORRELATION ON (S21)(R22)
50 MHZ IF. MON
MODULE A1, 60 MHZ REFERENCE DISTRIBUTION
X3 MULTIPLIER
120° VOLTAGE CONTROLLED PHASE SHIFTER
20 MHZ DISTRIBUTION AMPL
CARRIER CHANNEL SELECT (S1-S10) (R1-R10)
CROSS CORRELATION ON (S21)(R21)
CARRIER CHANNEL SELECT (S1-S10)(R11-R20)
20 MHZ REF
POWER DIVIDER HY1
COAXIAL RELAY
X8 MULTIPLIER A1
X8 MULTIPLIER A2
X4 MULTIPLIER A3
X4 MULTIPLIER A4
MODULE A20, FILTER
BANDPASS FILTER 67.2 MHZ TO 70.8 MHZ
BANDPASS FILTER 63.7 MHZ TO 67.2 MHZ
LOW BAND RELAY ENERGIZER
MODULES A10, A11, A12
LOOP FILTER LINE DRIVER
10 SELECTABLE CRYSTAL VCO'S ≈21.2-23.4 MHZ
DIODE SWITCH NETWORK
X3 MULTIPLIER
MODULE A13 VCO DISTRIBUTION AMPLIFIER
67 MHZ DISTRIBUTION AMPL
VCO MON
DOPPLER EXTRACTOR VCO OUTPUT 1J7 (FIRST LO. ÷ 32)
CARRIER CHANNEL SELECT (S1-S10)
MIXER
10 MHZ AMPL AND FILTER
10 MHZ DISTRIBUTION AMPL
WIDEBAND AMPL AND DIODE SWITCH
CROSS CORRELATION ON (S21)

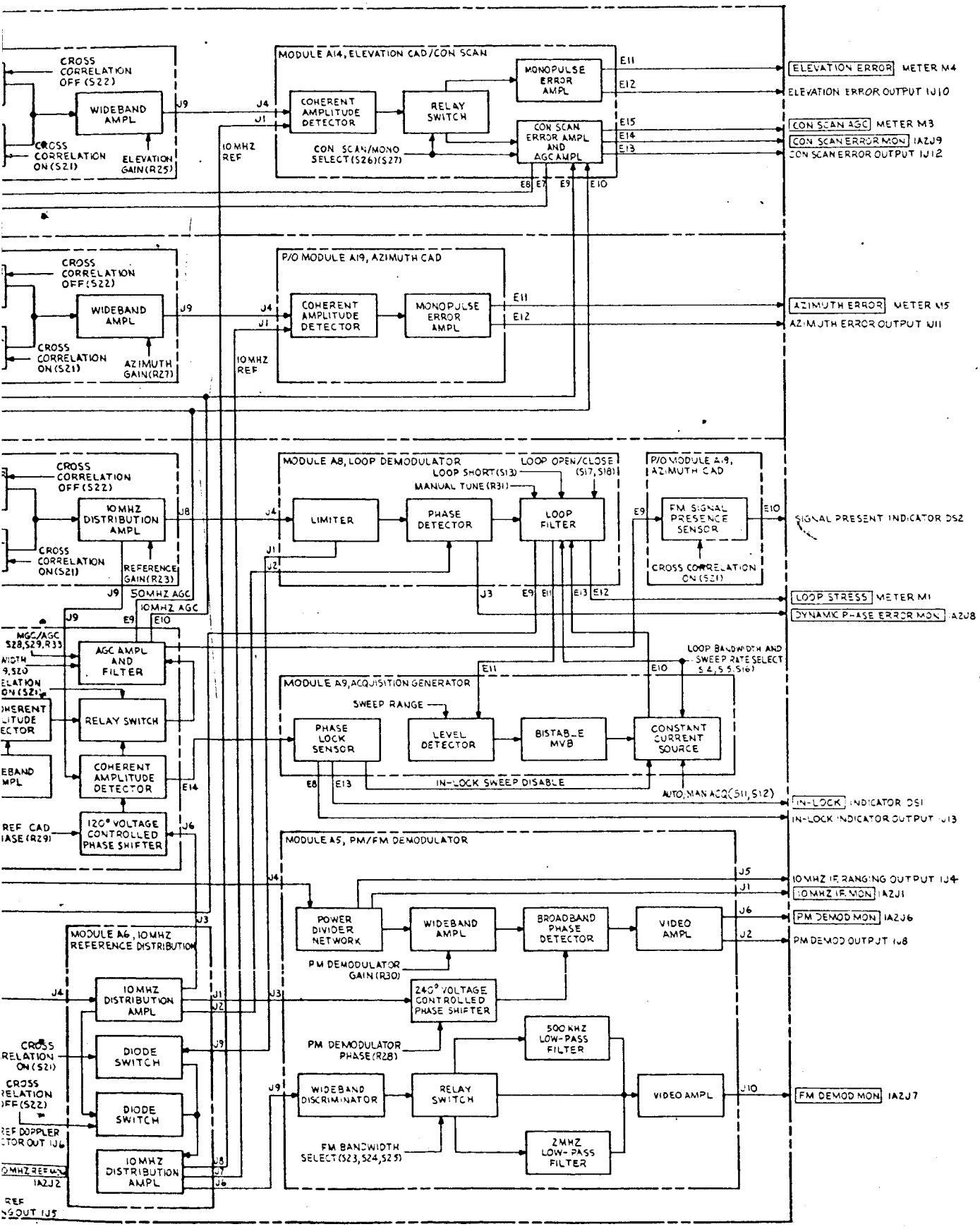

Figure 4 Unit 1 (PM/FM Receiver), Block Diagram

(7) Amplifier, Differential

(8) Phase Shifter

(9) Amplifier, Video

The "P" module approach offers several advantages for receivers of this type. Each "P" module is individually tested for compliance to its performance specification. Gain distributions are therefore accurately known throughout the receiver. Measured deviations from the specified levels will give a rapid means for fault isolation.

Reliability is also improved by use of "P" modules. Each circuit used in a "P" module has been carefully designed and thoroughly tested to assure a high production yield. Circuits with marginal performance are thereby eliminated. Further, by encapsulating all components in epoxy, the components are isolated from the thermal and physical stresses normally encountered in equipment of this type; the thermal improvement is obtained by the fact that the epoxy forms a good heat path to the mounting surface for each component.

The functional characteristics of the tracking receiver are fundamentally the same as the previously built SGLS receiver except for two notable differences. The front end was broadened to handle a 210 MHz bandwidth, and the approach to cross correlation in the non-coherent mode was changed.

The RF front end on the existing design achieved a 100 MHz bandwidth by use of three varactor multipliers each with a 35 mc bandwidth in the local oscillator chain. The proposed appraoch was to supply three extra multipliers to

permit coverage of the extra 110 MHz. The approach actually used was to incorporate two multipliers each with a 110 MHz bandwidth. The selection of the proper multiplier is accomplished automatically by the selection of the oscillator frequency.

The approach used for cross correlation is shown in the block diagram of Figure 5. The approach is basically to use the sum channel as the reference for the angle channels. The sum channel is hard limited at 10 MHz and coupled to the angle channel phase detectors. Phasing is accomplished by adjusting the phase of the second local oscillator.

G. Other Units

The other drawers used in the Test Set are:

(1) Interface Simulator

(2) RF Track

(3) Transponder Mount

(4) Commercial Test Equipment.

The first three drawers were made exactly the same as the previously built units; the commercial equipment included:

(1) HP 851A/8551A Spectrum Analyzer

(2) Fluke 540B Thermal Converter

(3) Elin SS-360 Power Supply, 400 cps, 3 Phase

IV. PROBLEM AREAS

The major problem areas in this program involved parts procurement. Long lead items which delayed completion of the effort included microwave components and quartz crystals. The microwave

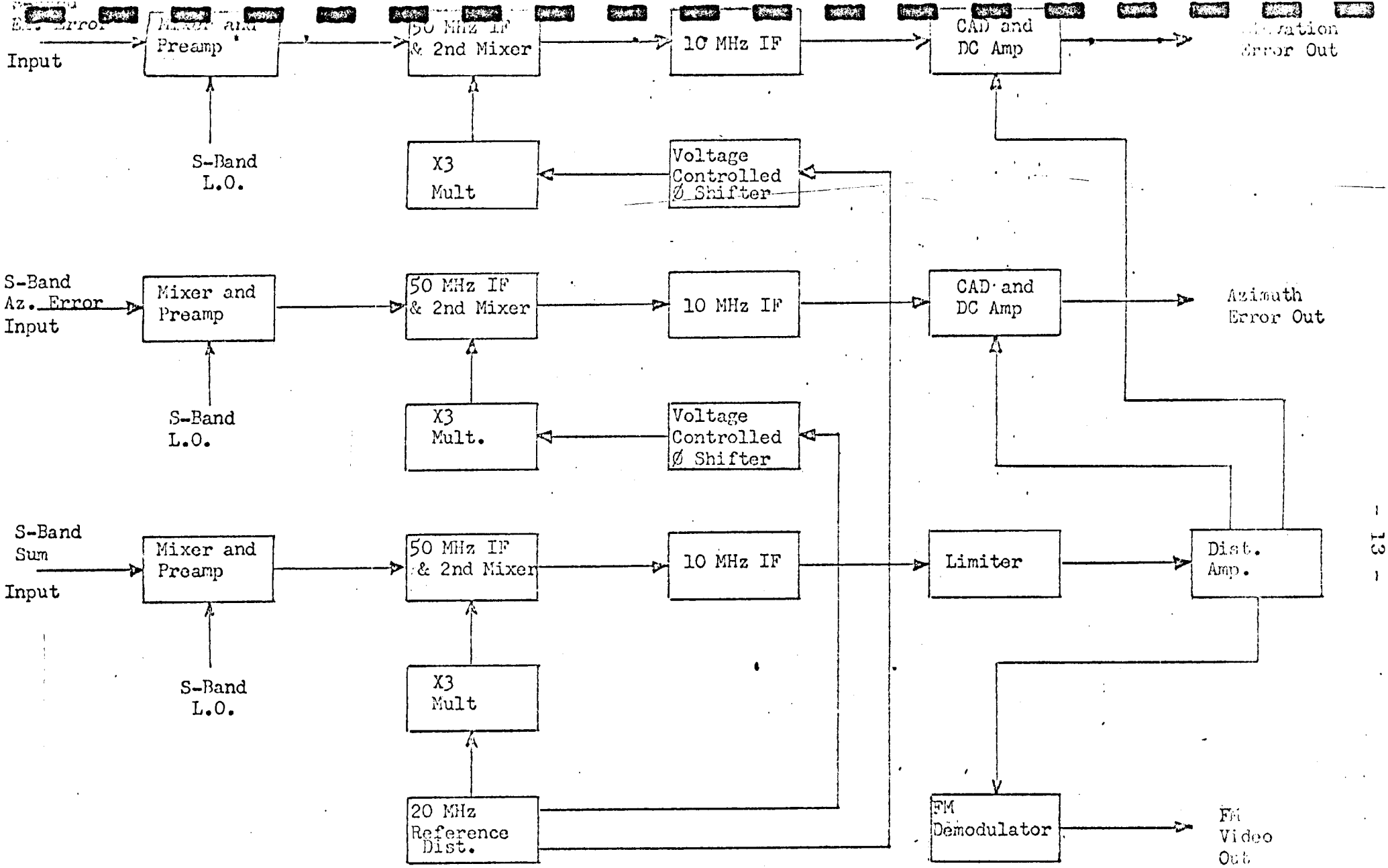

Figure 5
Cross Correlation
Functional Block Diagram

attenuators and directional couplers had delivery schedules on the order of 16 weeks ARO. The crystals ordered from Midland Wright had delivery schedules on the order of 8 weeks, but even after 12 weeks some units had not been received. Several of the crystals were out of tolerance and had to be returned and resulted in another 2 or 3 weeks delay.

Another procurement problem was encountered with the equipment racks. After working closely with a rack manufacturer to make good procurement documents, an order was placed; the manufacturer then announced that he was no longer producing the racks in question. Another manufacturer was contacted and the desired units were easily procured.

Early in the program a decision was made to change the local oscillator approach in the PM/FM receiver. The approach was to mix the output of a VCO with a switch selectable crystal oscillator to provide channel selection. After system assembly was completed, it was determined that low level spurious outputs were causing false-lock. To reduce the spurious signals to an acceptable level was determined to be impractical. The decision was made to return to the original local oscillator approach of using a separate VCO for each channel. The equipment was changed to include the ten VCO's. It should be noted that although there are ten VCO circuits, only six crystals are included to cover the specified six channels.

A minor addition was made to the PM/FM tracking receiver to improve pilot bulb life. A zener diode regulator was added on the 28 vdc unregulated supply to limit the voltage to 27 vdc.

V. TEST RESULTS

Test results for the equipment are given in Appendix I for Unit I (PM/FM Tracking Receiver) and in Appendix II for Units II and III.

VI. CONCLUSIONS

The equipment as built and delivered achieved the goals originally defined. Equipment improvements have been incorporated which offer greater testing flexibility and maintainability.

The improvements include: (1) addition of a ranging receiver input to permit interfacing to the PM/FM receiver as well as the PM test receiver; (2) addition of convenience outlets on the circuit breaker panel; (3) packaging of the PM/FM receiver including the RF head in a single equipment rack; (4) redesign of the PM/FM receiver RF head to cover the range of 2090 MHz to 2300 MHz without removal and replacement of varactor multipliers; (5) redesign of the PM/FM receiver to incorporate "P" module standard RF circuits; and (6) redesign of the cross correlation circuits in the PM/FM receiver to improve reliability and performance stability.

Although it was not a contractual requirement, channel selection on the PM/FM receiver by means of an external frequency synthesizer was a design goal; because of undesired spurious signals, the goal was not achieved.

All other goals, contractual and otherwise, were achieved.

APPENDIX I

UNIT I TEST RESULTS

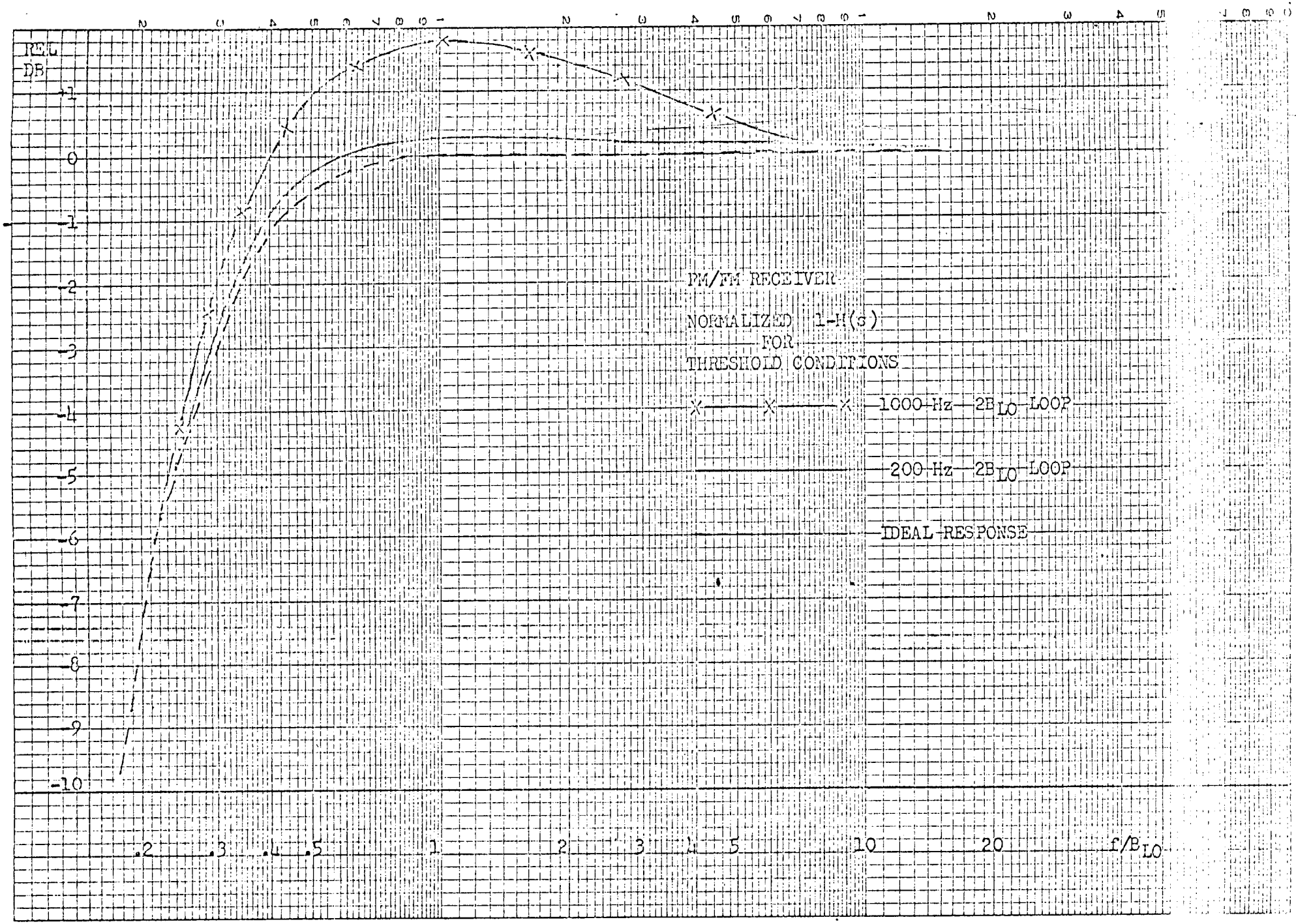
REL DB
+1
0
-1
-2
-3
-4
-5
-6
-7
-8
-9
-10
.2
.3
.4
.5
1
2
3
4
5
10
20
f/B_LO
FM/FM RECEIVER
NORMALIZED 1-H(s)
FOR
THRESHOLD CONDITIONS
1000 Hz 2B_LO LOOP
200 Hz 2B_LO LOOP
IDEAL RESPONSE

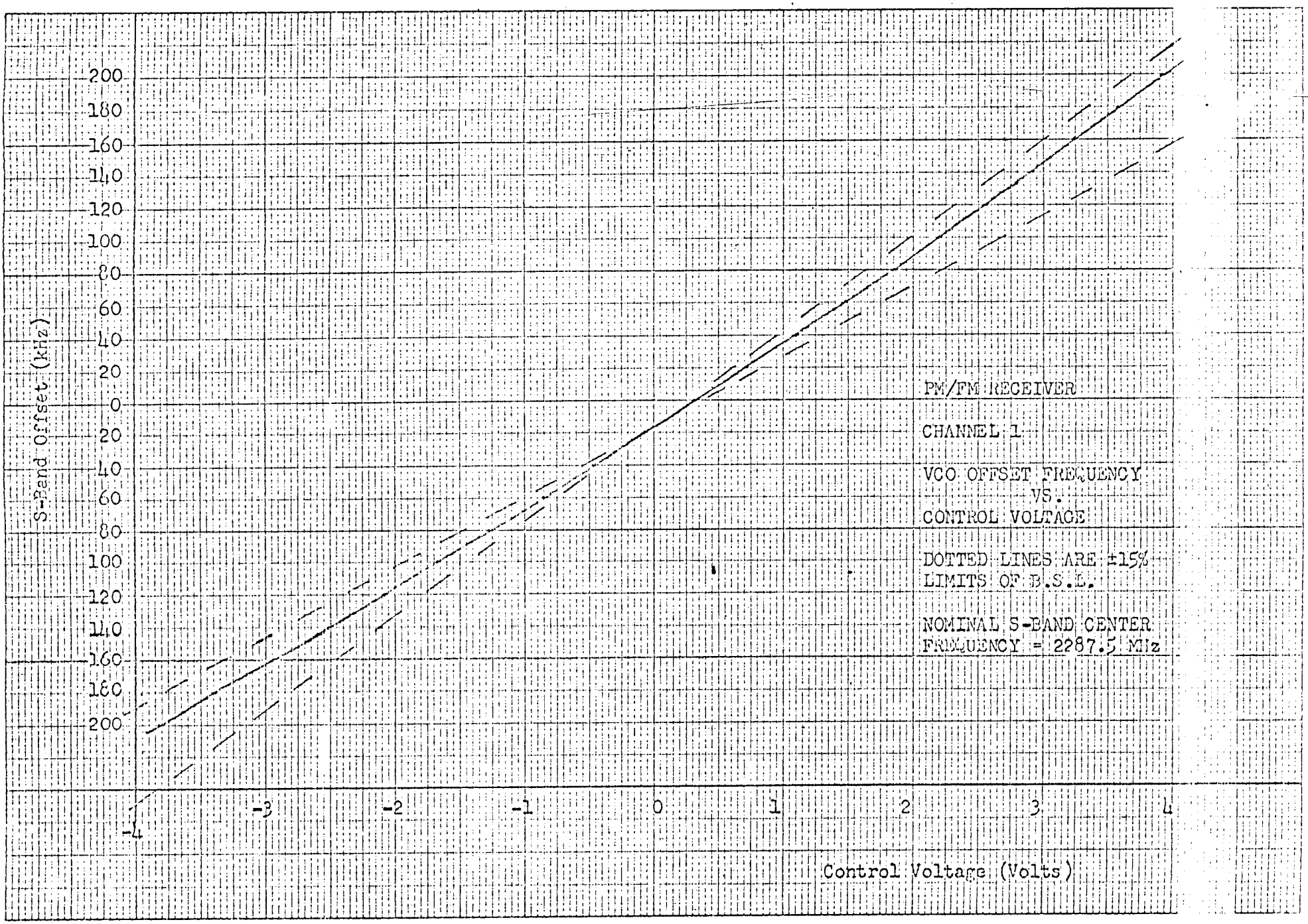
S-Band Offset (kHz)
200
180
160
140
120
100
80
60
40
20
0
20
40
60
80
100
120
140
160
180
200
-4
-3
-2
-1
0
1
2
3
4
Control Voltage (Volts)
PM/FM RECEIVER
CHANNEL 1
VCO OFFSET FREQUENCY
VS.
CONTROL VOLTAGE
DOTTED LINES ARE ±15%
LIMITS OF B.S.L.
NOMINAL S-BAND CENTER
FREQUENCY = 2287.5 MHz

Appendix

4.1.1 Noise Figure

4.1.1.1.1 Sum

	Measured	Limit
N.F.	10.5 db	12 db max

4.1.1.2.1 Elevation

	Measured	Limit
N.F.	10.5 db	12 db max

4.1.1.3.1 Azimuth

	Measured	Limit
N.F.	11.1 db	12 db max

4.1.2 IF Frequency

4.1.2.1

	Measured	Limit
IF Frequency	49.999912 MHz	50 MHz ±1 kHz

4.1.3. IF Bandwidth, Preamp

4.1.3.1.1 Sum

	Measured	Limit
f_2	58.5 MHz	
$-f_1$	41.1 MHz	
BW	17.4 MHz	10 MHz min

4.1.3.2.1 Elevation

	Measured	Limit
f_2	58.4 MHz	
$-f_1$	40.4 MHz	
BW	18.0 MHz	10 MHz min

4.1.3.3.1 Azimuth

	Measured	Limit
f_2	62.0 MHz	
$-f_1$	34.2 MHz	
BW	27.8 MHz	10 MHz min.

4.1.4 Gain, Preamp

4.1.4.1.1 Sum

	Measured	Limit
Input	-50 dbm	
Output	-23.8 dbm	
Gain	26.2 db	25 db min

4.1.4.2.1 Elevation

	Measured	Limit
Input	-50 dbm	
Output	-22.5 dbm	
Gain	27.5 db	25 db min

4.1.4.3.1 Azimuth

	Measured	Limit
Input	-50 dbm	
Output	-22.3 dbm	
Gain	27.7 db	25 db min

4.1.5 Input VSWR

4.1.5.1.1 Sum

	Measured	Limit
(2090 MHz) VSWR	1.18	1.3:1 max

4.1.5.1.2 Sum

	Measured	Limit
(2200 MHz) VSWR	1.185	1.3:1 max

4.1.5.1.3 Sum

	Measured	Limit
(2300 MHz) VSWR	1.14	1.3:1 max

4.1.5.2.1 Elevation

	Measured	Limit
2090 MHz) VSWR	1.02	1.3:1 max

4.1.5.2.2 Elevation

	Measured	Limit
(2200 MHz) VSWR	1.14	1.3:1 max

4.1.5.2.3 Elevation

	Measured	Limit
(2300 MHz) VSWR	1.18	1.3:1 max

4.1.5.3.1	Azimuth	Measured	Limit
	(2090 MHz) VSWR	1.05	1.3:1 max
4.1.5.3.2	Azimuth	Measured	Limit
	(2200 MHz) VSWR	1.15	1.3:1 max
4.1.5.3.3	Azimuth	Measured	Limit
	(2300 MHz) VSWR	1.16	1.3:1 max
4.1.6	Local Oscillator Leakage		
4.1.6.1.2	Sum	Measured	Limit
	(2237.5 MHz)	-42 dbm	-25 dbm max
4.1.6.1.3	Sum	Measured	Limit
	(2047.6 MHz)	-38 dbm	-25 dbm max
4.1.6.2.2	Elevation	Measured	Limit
	(2237.5 MHz)	-36 dbm	-25 dbm max
4.1.6.2.3	Elevation	Measured	Limit
	(2047.6 MHz)	-38 dbm	-25 dbm max
4.1.6.3.2	Azimuth	Measured	Limit
	(2237.5 MHz)	-36 dbm	-25 dbm max
4.1.6.3.3	Azimuth	Measured	Limit
	(2047.6 MHz)	-39 dbm	-25 dbm max
4.1.7	Channel Isolation		
4.1.7.1.1	Sum	Measured	
	(50 MHz Output	-9 dbm	
4.1.7.1.2	Elevation	Measured	Limit
	50 MHz Output	-82 dbm	
	Isolation, Sum to El.	71 db	45 db min
4.1.7.1.3	Azimuth	Measured	Limit
	50 MHz Output	-72 dbm	
	Isolation, Sum to Az	61 db	45 db min

4.1.7.2.1 Elevation

	Measured
50 MHz Output	-8 dbm

4.1.7.2.2 Sum

	Measured	Limit
50 MHz Output	<-80 dbm	
Isolation, El. to Sum	>72 db	45 db min

4.1.7.2.3 Azimuth

	Measured	Limit
50 MHz Output	-70 dbm	
Isolation, El. Az.	62 db	45 db min

4.1.7.3.1 Azimuth

	Measured
50 MHz Output	-8 dbm

4.1.7.3.2 Sum

	Measured	Limit
50 MHz Output	-70 dbm	
Isolation, Az. to Sum	62 db	45 db min

4.1.7.3.3 Elevation

	Measured	Limit
50 MHz Output	<-80 dbm	
Isolation, Az to El.	>72 db	45 db min

4.1.8 Frequency Stability

4.1.8.1 E_1 1.4 peak

E_2 0.02 Vrms

$$\text{Phase Jitter} = \frac{57.3\ E_2}{E_1} \text{ deg rms}$$

	Measured	Limit
Phase Jitter	0.818 deg rms	3° rms max.

4.1.9 Reference Carrier Phase Lock Requirements

4.1.9.1.1 Loop Response Data (1000 Hz BW)

4.1.9.1.1 (cont'd)

f/B_{LO}	Frequency	Relative Level
20	10 KHz	0 db
10	5 KHz	0 db
2	1 KHz	+ 1.5 db
1	500 Hz	+ 1.8 db
.5	250 Hz	+ 1.0 db
.4	200 Hz	0 db
.3	150 Hz	-2.0 db
.2	100 Hz	-7.5 db

Limit: See curve

4.1.9.1.2 Loop Response Data (200 Hz BW)

f/B_{LO}	Frequency	Relative Level
20	2 KHz	0 db
10	1 KHz	+.2 db
2	200 Hz	+.2 db
1	100 Hz	+.3 db
.8	80 Hz	+.2 db
.4	40 Hz	-.8 db
.3	30 Hz	-2.8 db
.2	20 Hz	-7.0 db

Limit: See curve.

4.1.9.2.1	+100 Hz Offset	Measured	Limit
	Center Reference	+8.7 mv	
	Phase Error Voltage	1.5 Δmv	
	Static Phase Error	0.0614 deg	±11.5° max
4.1.9.2.2	-100 Hz Offset	Measured	Limit
	Phase Error Voltage	1.8 Δmv	
	Static Phase Error	0.074 deg	±11.5° max
4.1.9.3.1	14 kHz/sec	Measured	Limit
	Dynamic Phase Error Voltage	±67 mv	
	Dynamic Phase Error	±2.75 deg	±11.5° max
4.1.9.3.2	550 Hz/sec	Measured	Limit
	Dynamic Phase Error Voltage	±28 mv	
	Dynamic Phase Error	±1.15 deg	±11.5° max
4.1.9.4.1	1000 Hz Loop Sensitivity	Measured	Limit
	Threshold	-131 dbm	-126 dbm
4.1.9.4.2	200 Hz Loop Sensitivity	Measured	Limit
	Threshold	-137 dbm	-133 dbm
4.1.9.5.1	Input -115 dbm		
	Verify no false lock	OK.	
4.1.9.5.2	Input -80 dbm		
	Verify no false lock	OK.	
4.1.9.5.3	Input -47 dbm		
	Verify no false lock	OK.	

4.1.9.6.1 VCO Linearity Data

Frequency VCO (MHz)	S-Band Offset (kHz)	Voltage	Dial Reading
69.915620	-200	-3.833 V.	0.27
69.916245	-180	-3.390	0.80
69.916870	-160	-2.950	1.33
69.917495	-140	-2.520	1.85
69.918120	-120	-2.095	2.38
69.918745	-100	-1.678	2.89
69.919370	-80	-1.267	3.39
69.919995	-60	-.861	3.88
69.920620	-40	-.463	4.38
69.921245	-20	-.075	4.86
69.921870	0	+.311	5.33
69.922495	+20	+.707	5.82
69.923120	+40	+1.113	6.32
69.923745	+60	+1.491	6.78
69.924370	+80	+1.857	7.22
69.924995	+100	+2.211	7.67
69.925620	+120	+2.564	8.10
69.926245	+140	+2.910	8.54
69.926870	+160	+3.249	8.94
69.927495	+180	+3.584	9.34
69.928120	+200	+3.916	9.74

4.1.10 Phase-Lock Acquisition

4.1.10.1.1 Sweep Rate, 200 Hz Mode	1094	Hz/sec	1000 Hz/sec nom.
4.1.10.1.2 Sweep Rate, 1000 Hz Mode	27.39	kHz/sec	25 kHz/sec nom.
4.1.10.1.3 Sweep Rate, 5000 Hz Mode	574.2	kHz/sec	500 kHz/sec nom.

4.1.10.2.1 Retrace Time

Measured	Limit
5.5 %	5% max

4.1.10.3.1 Sweep Range (max)

Measured	Limit
± 202 kHz	±200 kHz min

4.1.10.3.2 Sweep Range (min)

Measured	Limit
± 7.8 kHz	±10 kHz max

4.1.11 Reference Carrier AGC Requirements

4.1.11.1.1 40 Hz AGC Loop

		Measured	Limit
	BW, -3 db	16 Hz	
$2B_L$ = (3.14)	BW, 3 db		
	$2B_L$ =	50.2 Hz	40 Hz ± 8 Hz

4.1.11.1.2 400 Hz AGC Loop

		Measured	Limit
	BW, -3 db	142 Hz	
	$2B_L$ = (3.14) BW_{3db}		
	$2B_L$ =	446 Hz	400 Hz ±80 Hz

4.1.11.1.3 Amplitude Fluctuation Capability

p-p AGC voltage 0.255 vp-p

For reference only.

4.1.11.2 AGC vs. Signal Strength Characteristic

4.1.11.2.1 AGC vs. Signal Strength Data

Signal Strength	AGC Voltage
-45	1.05 v.
-55	1.42 v.
-65	1.76 v.
-75	2.05 v.
-85	2.28 v.
-95	2.50 v.

4.1.11.2.1 (contd)

-105 dbm	2.68 v.
-115 dbm	2.85 v.
-125 dbm	3.05 v.
-135 dbm	3.25 v.
-145 dbm	_____ v.

For reference only

4.1.11.2.2 Output Level Variation

Input Level	Relative Output Level	Limit
-45 dbm	0 db	+1 db
-80 dbm	Reference level	Reference Level
-135 dbm	-1 db	-1 db

4.1.12 Wideband Carrier Demodulator Scale Factor

	Measured	Limit
RF Voltmeter No. 2	7.05 mv	7.07 mv ±10%

4.1.13 Angle Channel Output Level and Gain Tracking

4.1.13.1.1 Output Level, Monopulse Mode

	Measured	Limit
(AZ) Voltmeter No. 1	-6.2 v	6v ±10%
(EL) Voltmeter No. 2	-6.187 v	6v ±10%

4.1.13.1.2 Gain Tracking, Azimuth

	Measured	Limit
Minimum Voltmeter No.1	-5.292 v	4.2v
Maximum voltmeter No.1	-6.17 v	8.5 v

4.1.13.1.3 Gain Tracking, Elevation

	Measured	Limit
Minimum Voltmeter No.2	-5.525 v	4.2 v
Maximum Voltmeter No.2	-6.230 v	8.5 v

4.1.13.2.1 Output Level, CON SCAN Mode

Measured	Limit
2.14 vrms	2.12 vrms ±10%

4.1.14 Angle Channel Cross Talk

4.1.14.1.1 Elevation

	Measured	Limit
p-p variation	0.07 vp-p	1.2 vp-p max (35 db)

4.1.14.2.1 Azimuth

	Measured	Limit
Mea		
p-p variation	0.21 vp-p	1.2 vp-p max (35 db)

4.1.15 Cross Correlation Demodulator

4.1.15.1.1 Demodulator Sensitivity Data

Frequency Offset	Voltage	Limit
-2.00 MHz	-2.021 v	-2v ±.2v
-1.00 MHz	-0.974 v	-1v ±.1v
+1.00 MHz	+0.989 v	+1v ±.1v
+2.00 MHz	+1.933 v	+2v ±.2v

4.1.15.2.1 Demodulator Frequency Response (2MHz BW)

	Measured	Limit
BW, -3 db	1.85 MHz	1.5 MHz min

4.1.15.2.2 Demodulator Frequency Response (500 kHz BW)

	Measured
BW, -3 db	495 kHz

For reference only

4.1.15.3 Cross Correlation Angle Channel Tracking Data

4.1.15.3.1 Elevation

	Measured
Max	-6.07 v
Min	-6.07 v

For reference only.

4.1.15.3.2 Azimuth

	Measured
Max.	-6.118 v
Min.	-5.716 v

For reference only

4.1.15.4.1 Cross Correlation Mode AGC Characteristic Data

Input Signal Level	AGC Meter
-45 dbm	1.1 v
-55 dbm	1.5 v
-65 dbm	1.8 v
-75 dbm	2.1 v
-85 dbm	2.3 v
-95 dbm	2.45 v

For reference only

.2.1 PM/FM Receiver Reference Data

Function	Designator	Output Level
10 MHz IF mon	1A2J1	-49.7 dbm
10 MHz Ref Mon	1A2J2	-0.2 dbm
VCO Mon.	1A2J3	-11.0 dbm
50 MHz IF Mon	1A2J4	-51.5 dbm
60 MHz Ref. Mon	1A2J5	-14.4 dbm
Ranging 10 MHz IF Out.	1J4	-65.0 dbm
Ranging 10 MHz Ref. Out	1J5	+9.6 dbm
Doppler Extractor 10 MHz Ref. Out	1J6	-0.1 dbm
Doppler Extractor VCO Out.	1J7	-2.2 dbm

Supplementary Data

Channel 2

I. VCO Characteristics

Control Voltage	Manual Tune Dial	Measured Frequency	Nominal Frequency
+4 v	9.84	69.772134	69.771996
+2 v	7.40	69.768631	69.768798
0 v	4.95	69.765353	69.76560
-2 v	2.49	69.762319	69.762402
-4 v	0.06	69.759490	69.759204

II. Verify No False Lock OK

Channel 5

I. VCO Characteristics

Control Voltage	Manual Tune Dial	Measured Frequency	Nominal Frequency
+4 v	9.84	63.994312	63.993996
+2 v	7.41	63.990730	63.990798
0 v	4.95	63.987425	63.987600
-2 v	2.49	63.984348	63.984402
-4 v	0.06	63.981450	63.981204

II. Verify No False Lock OK

Channel 6

I. VCO Characteristics

Control Voltage	Manual Tune Dial	Measured Frequency	Nominal Frequency
+4 v	9.84	69.459627	69.459396
+2 v	7.41	69.456102	69.456198
0 v	4.95	69.452811	69.453000
-2 v	2.49	69.449700	69.449802
-4 v	0.06	69.446770	69.446604

II. Verify No False Lock OK

Channel 9

I. VCO Characteristics

Control Voltage	Manual Tune Dial	Measured Frequency	Nominal Frequency
+4 v	9.84	69.630394	69.630146
+2 v	7.41	69.626793	69.626948
0 v	4.95	69.623481	69.623750
-2 v	2.49	69.620398	69.620552
-4 v	0.06	69.617531	69.617354

II. Verify No False Lock OK

Channel 10

I. VCO Characteristics

Control Voltage	Manual Tune Dial	Measured Frequency	Nominal Frequency
+4 v	9.84	69.656534	69.656396
+2 v	7.40	69.652976	69.653198
0 v	4.95	69.649675	69.6500
-2 v	2.49	69.646586	69.646802
-4 v	0.06	69.643840	69.643604

II. Verify No False Lock OK

APPENDIX II

UNIT II AND III TEST RESULTS

5.0 TEST DATA SHEETS

Reference Para. No.		Data	Limits
4.0	DETAILED TESTS		
4.1	FM TRANSMITTER NO. 1 CHARACTERISTICS		
4.1.1	Output Level and Frequency		
4.1.1.1	Fixed Output		
	2106.4 Freq	2106.38 MHz	2106.4 MHz ± 100 KHz
	2101.8 Freq	2101.78 MHz	2101.8 MHz ± 100 KHz
	2097.6 Freq	2097.59 MHz	2097.6 MHz ± 100 KHz
	2106.4 Level	-1.45 dbm	0 dbm ± 3 db
	2101.8 Level	-1.6 dbm	0 dbm ± 3 db
	2097.6 Level	-1.6 dbm	0 dbm ± 3 db
4.1.1.2	Variable Output		
	2106.4 Level settable to -20 dbm	✓	Check off if satisfactory
	2108.4 Level settable to -20 dbm	✓	" "
	2097.6 Level settable to -20 dbm	✓	" "
4.1.2	FM CHARACTERISTICS		
4.1.2.1	Linearity		

Linearity - Perform tests for fm = 0.1 Mc

Reference Para. No.		Data	Limits

4.1.2.1 Linearity cont.

fm = 0.1 MHz

Measured Data

Mixer: NARDA 521 fo = 8.4 gc (X4)

B	Null	RMS Volts
.601	1st Jo	0.5974
2.163	3th Jo	2.157
2.948	4th Jo	2.950

Mixer: NARDA 519 fo = 4.2 gc (X2)

1.202	1st Jo	1.199
2.760	2nd Jo	2.755

No. Mixer: fo = 2.1 gc (X1)

2.404	1st Jo	2.402

Mixer: NARDA 523 f_o = 16.8 (X8)

.301	1st Jo	0.2997
1.474	4th Jo	1.471

Linearity - Calculated Data fm = 0.1 MHz

Eth and B	From Data Sheet E_m	Eth-Em E	% Error = $\frac{E}{Eth}$ x 100
0.301	0.2997	-.0013	-0.422
0.601	0.5974	-.0036	-0.60
1.202	1.199	-.003	-0.246
1.474	1.471	-.003	-0.204
2.163	2.157	-.006	-0.28
2.405	2.402	-.003	-0.125
2.760	2.755	-.005	-0.19
2.948	2.950	+.002	+0.68

Specification: ± 3% maximum error to 2 radians and ± 6% maximum error to 3 radians deviation

4.1.2.2 Frequency Response (B = 1.3800)

Frequency	EM	% Variation	Limits
10 KC	1.364	-1.04	±3% to 1.5 MC
50 KC	1.370	-0.585	
100 KC	1.378	REF	
500 KC	1.385	+0.51	
1.0 MC	1.386	+0.585	
1.5 MC	1.397	+0.95	
4.0 MC	1.428	+3.68	within 10% to 4.0 MC

$$\% \text{ Variation} = \frac{E_m(\text{at } 100 \text{ KC}) - E_m(\text{at fm})}{E_m(\text{at } 100 \text{ KC}}$$

Reference Para. No.		Data	Limits
4.1.3	Phase Jitter		
4.1.3.1	2106.4		
		Phase Jitter 4.55 degrees RMS	4.24° RMS maximum
		Beat Note 0.079 V/deg	None
4.1.3.5	2101.8		
		Phase Jitter 1.84 degrees RMS	4.24° RMS maximum
		Beat Note 0.079 V/deg	None
4.1.3.6	2097.6		
can't check		Phase Jitter _____ degrees RMS	4.24° RMS maximum
		Beat Note _____ V/deg	None
4.2	RM TRANSMITTER NO. 2 CHARACTERISTICS		
4.2.1	RF Output Level and Frequency		
4.2.1.1	Fixed Output		
		2277.96 Freq 2277.948 MHz	2277.96 MHz ±100 KHz
		2278.8 Freq 2278.772 MHz	2278.8 MHz ±100 KHz
		2277.96 Level -5.8 dbm	0 dbm ± 3 db
		2278.8 Level -5.6 dbm	0 dbm ± 3 db
4.2.1.2	Variable Output		
		2277.96 Level settable to -20 dbm ✓	check off if satisfactory
		2278.8 Level settable to -20 dbm ✓	"

Reference Para. No.		Data	Limits

4.2.2 Phase Modulation Characteristics

4.2.2.1 Linearity

Linearity - Perform tests for fm = 0.1 Mc

fm = 0.1 Mc

Measured Data

Mixer: NARDA 521 fo = 8.4 gc (X4)

B	Null	RMS Volts
.601	1st Jo	0.6095
1.380	2nd Jo	1.406
2.163	3rd Jo	2.204
2.948	4th Jo	3.005

Mixer: NARDA 519 fo = 4.2 gc (X2)

1.202	1st Jo	1.227
2.760	2nd Jo	2.816

No. Mixer: fo = 2.1 gc (X1)

2.404	1st Jo	2.450

Linearity - Calculated Data fm = 0.1 MHz

Eth and B	From Data Sheet E_m	Eth-Em E	% Error = $\frac{E}{Eth}$ x 100
~~0.301~~			
0.601	0.6095	+.0085	+1.41
1.202	1.227	+.025	+2.01
1.380 ~~1.474~~	1.406	+.026	+1.88
2.163	2.204	+.041	+1.9
2.405	2.450	+.045	+1.9
2.760	2.816	+.056	+2.03
2.948	3.005	+.057	+1.93

Specification: ± 3% maximum error to 2 radians and ± 6% maximum error to 3 radians deviation

Reference Para. No.		Data	Limits

4.2.2.2 Frequency Response (B = 1.3800)

Frequency	EM	%Variation	Limits
10 KC	1.394	-1.06	± 3% to 1.5 MC
50 KC	1.399	-0.71	
100 KC	1.409	REF	
500 KC	1.410	+0.01	
1.0 MC	1.407	-0.14	
1.5 MC	1.395	-0.99	
4.0 MC	1.450	+0.64	within 10% to 4.0 MC

$$\% \text{ Variation} = \frac{E_m(\text{at } 100 \text{ KC}) - E_m(\text{at fm})}{E_m(\text{at } 100 \text{ KC})}$$

4.2.3 Phase Jitter

4.2.3.1 2277.96

Phase Jitter 3.35 degrees RMS 4.24°RMS maximum

Beat Note 0.079 V/deg None

2278.8

Phase Jitter 2.15 degrees RMS 4.24°RMS maximum

Beat Note 0.079 V/deg None

Reference Para. No.		Data.	Limits
	[illegible] CHARACTERISTICS		
4.3.1	Input VSWR @ J2	1.12:1	1.3:1
4.3.2	Input Attenuator		30 db

8614A Output	Attenuator Setting	Output at J9	No Limits But attenuator should cover -20 dbm to -50 dbm range
-20 dbm	30 db	-19.6 dbm	
-25	24.6 db	-19.6 dbm	
-30	19.0 db	-19.6 dbm	
-35	14.8 db	-19.6 dbm	
-40	10.5 db	-19.6 dbm	
-45	5.5 db	-19.6 dbm	
-50	1.0 db	-19.6 dbm	

4.3.3 Acquisition Range

2287.4 MHz Lockup Achieved	✓	Check mark if satisfactory
2287.6 MHz Lockup Achieved	✓	" "
2282.7 MHz Lockup Achieved	✓	" "
2282.9 MHz Lockup Achieved	✓	" "
2277.86 MHz Lockup Achieved	✓	" "
2278.06 MHz Lockup Achieved	✓	" "
2278.7 MHz Lockup Achieved	✓	" "
2278.9 MHz Lockup Achieved	✓	" "

Reference Para. No.		Data	Limits
4.3.4	Noise Figure		
		7.6 db	15 db maximum
4.3.5	Tracking Bandwidth		
	3 db modulating frequency	5.3 Hz x 3.33 =	18 21.2 Hz ±10%
	3 db modulating frequency	108 Hz x 3.33 =	360 400 Hz ±10%
4.3.6	Phase Jitter		
	See para. 4.1.3 and 4.2.3		
4.3.7	Predetection Bandwidth		
	10 MHz	+0.3 dbm	None
	1.219 MHz	-3.3 dbm	
	14.750 MHz	-3.3 dbm	
	3 db B.W. =	13.521 kHz	10 ~~kHz nominal~~ MHz MIN.
4.4	FM RECEIVER CHARACTERISTICS		
4.4.1	Input Frequency		
	f	Meter Reading	
	2272.0 MHz	49	50 ±10
	2272.5 MHz	7.5	~~0 ±10~~ 3.0 - 7.0
	2273.0 MHz	47.5	50 ±10
	2282.0 MHz	45	50 ±10
	2282.5 MHz	7.0	~~0 ±10~~ 3.0 - 7.0
	2283.0 MHz	45	50 ±10

Reference Para. No.			Data	Limits
4.4.2	Input VSWR			
			1.08:1	less than 1.3:1
4.4.3	Residual FM			
	2272.5	42.4 mv RMS	173 Hz	≤990 Hz
	2282.5	44 mv RMS	183 Hz	≤990 Hz
4.4.4	Low Gain Output Constant			
	2272.5 Hz	202 mv RMS		212 mv RMS ±10%
	2282.5 Hz	206 mv RMS		212 mv RMS ±10%

Reference Para. No.		Data	Limits

4.4.5 125 KC Linearity

Input 2272.5 Hz

Null	B	Δf	Digital Reading	HP 3400A Scale
2nd J_0 (X4)	1.380	172.50 KHz	359	0.1V
1st J_0	2.405	301.000 KHz	625	0.1V
2nd J_0	5.520	690.000 KHz	451	0.3V
3rd J_0	8.6537	1081.712 KHz	710	0.3V

Measured V_{out}	Measured Sensitivity	Cal V_{Out}	% Error	Limit
35.4MV	2.08 V/MHz	35.8MVRMS	.11	± 2.0%
62.3MV	2.076	62.45MV	.025	
143MV	2.07	143.2MV	.01	
224MV	2.07	224.5MV	.02	

1. Measured Sensitivity $= \frac{V_{out}}{\Delta f}$

2. Calculated Sensitivity = 1/2 (Maximum measured sensitivity + Min. Measured Sensitivity)

   = 2.075 V/MHz

3. Cal V_{out} = (Calculated Sensitivity) Δf

4. % Error $\frac{\text{Cal } V_{out} - \text{Measured } V_{out}}{\text{Cal } V_{out}}$

Reference Parm. No. | Data | Limits

f_m = 316.698 MHz

Input 2272.5 MHz

Null	B	Δ f	Digital Reading	HP 3400A Scale
1st J_o (X4)	.601	.2082 MHz	434	0.1V
2nd J_o (X4)	1.380	.4784 MHz	987	0.1V
1st J_o	2.4048	.8337 MHz	547	0.3V
2nd J_o	5.520	1.9138 MHz	399	1.0V
3rd J_o	8.6537	3.0002 MHz	630	1.0V

Measured V_{out}	Sensitivity	Cal V_{out}	% Error	Limit
43.4MV	2.08	43.3mV	0.23	±3%
98.7mV	2.06	99.5mV	-0.8	
173mV	2.075	173mV	0	
399mV	2.08	398mV	0.25	
630MV	210	624MV	0.96	

CAL. SENS. 2.08

Reference Para. No. | Data | Limits

[illegible] Low Gain Frequency Response

Input 2272.5 MHz

Δf = 1 MHz

Null	Frequency	Digital Reading	V_o	V_o^1	% Error	Limit
1st J_o (X4)	1.6633 MHz	654	207	207	.48	±2%
2nd J_o (X4)	724.64 kHz	655	208	208	.93	±2%
1st J_o	415.84 kHz	656	206	(VR)	0	±2%
2nd J_o	181.16 kHz	657	207	207	.48	±2%
3rd J_o	115.56 kHz	658	207	207	.48	±2%

Δf = 1.202 MHz

1st J_o (X4)	2.000 MHz	803	253	253	2.3	±11.5%
1st J_o (X8)	4.000 MHz	412	412	412	10	±11.5%

$$V_o^1 = \frac{V_o}{\Delta f \text{ in MHz}}$$

$$\% \text{ Error} = \frac{V_o^1 - VR}{VR}$$

Reference Para. No.	Data	Limit
[illegible]	Input 2282.5 MHz	
Frequency	Output Voltage	Limit
100 Hz	2.9	
1.00 kHz	2.98	
10.0 kHz	3.000 V	2.675 to 3.365 VRMS
100.0 kHz	3.00	
1000 kHz	2.98	
2000 kHz	2.86	
4000 kHz	0.130	<30 mv

Input 2272.5 MHz

Frequency	Output Voltage	Limit
100 Hz	2.90	
1.00 kHz	2.98	
10.0 kHz	3.000 V	2.675 to 3.365 VRMS
100.0 kHz	3.00	
1000 kHz	2.98	
2000 kHz	2.86	
4000 kHz	0.123	<30 mv

Reference Para. No.		Data	Limit
4.4.8	High Gain Output Constant		
	2272.5 MHz		
	Output Reading (V_o)	820 mv RMS	924 mv ±10%
	Output Constant		
	= (V_o) mv ÷ 20 kHz	41 µv RMS/Hz	
	2282.5 MHz		
	Output Reading (V_o)	834 mv RMS	924 mv ±10%
	Output Constant		
	= (V_o) mv ÷ 20 kHz	41.7 µv RMS/Hz	

4.5 TEST TRANSLATOR CHARACTERISTICS

4.5.1 Input Frequency

Transmitter Freq. (F_1) + Osc. Freq. (F_2) = Output Freq. (F_3) $F_1 + F_2 = F_3 = \pm 10$ cps

	2101.80208 MHz	+ 180.696808	= 2282.498888
(LEM)	2101.~~93403~~ .916100 MHz	+ 180.696808	= 2282.612908
	2101.~~67063~~ .674150 MHz	+ 180.696808	= 2282.370958
CSM-PM	2106.40625 MHz	+ 181.092960	= 2287.499120
CSM-FM	2106.40625 MHz	+ 166.093233	= 2272.499483

4.5.2 Frequency Response and Conversion Loss

Frequency	Conversion Loss	Conversion Loss
CSM-PM	7.0 db	10 db
CSM-FM	8.2 db	
LEM	7.4 db	

	Lower 0.2 db Point	Upper 0.2 db Point	
CSM-PM	2081.00 MHz	2115.83 MHz	2106.4 ±6 MHz
CSM-FM	2064.255 MHz	2130.026 MHz	2106.4 ±6 MHz
LEM	2076.681 MHz	2118.215 MHz	2101.8 ±6 MHz

4.6 INTERFACE SIMULATOR CHARACTERISTIC

4.6.1 DOWN-LINK SUMMING AMPLIFIER

4.6.1.1 Output Bandwidth

Frequency	Output	Limit
300 Hz	1.016	1.00V ± 59 mw
1 KHz	1.008	
10 KHz	1.00 VRMS	
100 KHz	1.010	
1 MHz	0.983	
1.5 MHz	0.970	
2.0 MHz	0.953	1.00V ± 59 mw

4.6.1.2 Output Level 9.0 V p-p 9V p-p (Minimum)

4.6.2 UP-LINK SUMMING AMPLIFIER

4.6.2.1 Output Bandwidth

Frequency	Output	Limit
300 Hz	0.990	Maximum Deviation between any two output levels shall be less than 24 MV
3 KHz	0.998	
10 KHz	1.000	
100 KHz	1.004	
1000 KHz	1.009	
1500 KHz	1.008	
2000 KHz	1.001	

4.6.2.2 Output Level and Distortion

Frequency	Output
1 MHz, A =	78 m VRMS
2 MHz, B =	270 μ VRMS
3 MHz, C =	150 μ VRMS

$$\text{Distortion} = \frac{\sqrt{B^2 + C^2}}{A} \times 100$$

$$\times 100 = 0.39\ \%$$ 2% (Maximum)

4.7 RF TRACK CHARACTERISTICS

4.7.1 MODULATION SENSITIVITY

4.7.1.5 vdc offset + 556 millivolts

4.7.1.6 Crystal detector reference .145 volts

4.7.1.7 +4.000 volts + vdc offset 4.556 volts

4.7.1.8 Power Meter Recorder reference .810 volts

4.7.1.9 Vo -4.043 volts

4.7.1.10 -4.000 volts + vdc offset -3.444 volts

4.7.1.11 Power Meter Recorder reference -.423 volts

4.7.1.12 Vn .9694 volts

4.7.1.13 Power Meter Recorder reference .889 volts

Vc = 2.604 volts

4.7.1.14 +2.5000 volts + vdc offset +3.056 volts

Power Meter recorder reference .6063 volts

Vp -3.505 volts

-2.5000 volts + vdc offset -3.944 volts

Power Meter Recorder reference .3338 volts

Vn 1.498 volts

4.7.1.15 +1.0000 volts + vdc offset 1.556 volts

Power Meter Recorder reference .4193 volts

Vp 2.925 volts

-1.0000 volts + vdc offset -.444 volts

Power Meter Recorder reference .7515 volts

Vn 2.199 volts

4.7.1.16	VDC offset	551.3 mv
	+5.0000 volts + vdc offset	5.551 volts
	Power Meter Recorder reference	.3637 volts
	Vp	2.720 volts
	-5.0000 volts + vdc offset	-4.449 volts
	Power Meter Recorder reference	.4869 volts
	Vn	1.796 volts
4.7.1.17	+2.500 volts + vdc offset	3.051 volts
	Power Meter Recorder reference	.2928 volts
	Vp	2.464 volts
	-2.500 volts + vdc offset	-1.949 volts
	Power Meter Recorder reference	.604 volts
	Vn	2.000 volts
4.7.1.18	+1.000 volts + vdc offset	1.551 volts
	Power Meter Recorder reference	.841 volts
	Vp	2.321 volts
	-1.000 volts + vdc offset	-.449 volts
	Power Meter Recorder reference	.703 volts
	Vn	2.136 volts
4.7.1.19	+0.500 volts + vdc offset	+1.051 volts
	Power Meter Recorder reference	.8015 volts
	Vp	2.275 volts
	-0.500 volts + vdc offset	+.051 volts
	Power Meter Recorder reference	.7310 volts
	Vn	2.182 volts

4.7.1.20 Mod Test Voltage	Ma	Limit
4.0000 Volts (0-80% Range)	76.2 %	75% to 85%
2.5000 Volts (0-80% Range)	50.1 %	45% to 55%
1.0000 Volts (0-80% Range)	15.1 %	15% to 25%
5.0000 Volts (0-20% Range)	20.46 %	19% to 21%
2.500 Volts (0-20% Range)	10.39 %	9.5% to 10.5%
1.000 Volts (0-20% Range)	4.15 %	3.4% to 4.4%
0.500 Volts (0-20% Range)	2.02 %	1.8% to 2.2%

4.7.2 FREQUENCY RESPONSE

(4.7.2.6 to 4.7.2.9)

Frequency	E_{out} J3	E_{out} J7
50 cps	2.89 Volts	7.37 mVolts
200 "	2.90 "	7.38 "
1000 "	2.89 "	7.38 "
2500 "	2.895 "	7.38 "
25,000 "	2.88 "	7.405 "

4.7.2.10

Frequency	$\frac{E_{out}\ J3}{E_{out}\ J7}$
50 cps	.392
200 cps	.393
1000 cps	.392
2500 cps	.392
25,000cps	.389

4.7.2.11 $\frac{E_{out}\ J3}{E_{out}\ J7}$ max. .3916

$\frac{E_{out}\ J3}{E_{out}\ J7}$ min. .3907

		Limit
4.7.2.12 Maximum Percent Error	0.2	4.7%
4.7.2.13 25 Kcps Frequency Response	0.993	Shall be greater than or equal to 0.707

4.8 RANGING CHARACTERISTICS

4.8.1 Absolute Delay and Resolution

4.8.1.4 999 nanoseconds 1000 ± 20 nsec.

4.8.2 Transmitter Code

POSITIVE PULSE
~~Full cycle~~ 1000 nanoseconds ~~1008 ± 8 nsec.~~

NEGATIVE PULSE
~~Half cycle~~ 995 nanoseconds ~~1/2 full cycle ± 20 nsec.~~ ± 20 NSEC MAX

Binary -0.400 volts 0 ± 500 mv

Levels -4.85 volts -5V ± 1 volt

Rise Time 19 nanoseconds 80 nsec. maximum

Fall Time 22 " "