THE MATERIALS RESEARCH LABORATORY

THE PENNSYLVANIA STATE UNIVERSITY

THIRD SEMIANNUAL REPORT

on

Research on The Mechanism and Kinetics of

Oxidation of Silicon in Air

For the period

1 June 1966 to 30 November 1966

Grant Number NASA Grant NGR-39-009-042

National Aeronautics and Space Administration

Washington, D. C. 20546

December 27, 1966

N67 16631 (ACCESSION NUMBER)
37 (PAGES)
CR-81334 (NASA CR OR TMX OR AD NUMBER)
(THRU)
1 (CODE)
06 (CATEGORY)
FACILITY FORM 602

GPO PRICE $ _____

CFSTI PRICE(S) $ _____

Hard copy (HC) 3.00

Microfiche (MF) .65

ff 653 July 65

K. Vedam
F. Lukes
R. Rai

UNIVERSITY PARK, PENNSYLVANIA

THIRD SEMIANNUAL REPORT

on

Research on The Mechanism and Kinetics of Oxidation of Silicon in Air

For the period

1 June 1966 to 30 November 1966

Grant Number NASA Grant NGR-39-009-042

National Aeronautics and Space Administration

Washington, D. C. 20546

December 27, 1966

K. Vedam
F. Lukes
R. Rai

Table of Contents

	Summary	(ii)
1.	Introduction	1
2.	Instrumentation	2
3.	Experimental	4
	Discussion	23
4.	Theoretical	26
5.	Conclusions	32
6.	Personnel	33

SUMMARY

This third semiannual report describes the progress of the work done on the ellipsometric studies on the growth of thin oxide film on silicon in air. After a detailed calibration of the various components of the ellipsometer the thickness of the oxide films grown in air have been measured at various angles of incidence, and by two different methods on polished silicon and germanium, on etched silicon and on freshly cleaved silicon samples. The kinetics of oxidation in air of freshly cleaved samples of silicon has also been studied for a period of more than 20 days. These studies indicate that the Elovich equation can be used to describe the rate of oxidation in the later stages. In the earlier stages, however, further experimentation is necessary before we can come to a definite conclusion.

Preliminary measurements on the thickness of the oxide layer on silicon, by allowing the light to be incident on the film from a liquid like toluol, confirm the theoretical expectations that the sensitivity that can be attained by this technique is much higher than that of Archer and others. It must be mentioned, however, that the technique suffers from some experimental difficulties, but they can be overcome. Theoretical computations indicate that for angles of incidence ϕ_o greater than the critical angle ϕ_c, the sensitivity is not as high, as when ϕ_o is slightly less than ϕ_c.

Considerable progress has also been made in the instrumentation of the various accessories to the ellipsometer - in particular for the rapid determination of the ellipsometer readings automatically.

1. INTRODUCTION

During the period July 1, 1966 to November 30, 1966 studies on the kinetics of oxidation of silicon have continued in several ways and the first experimental results have begun to come out. The thickness of the oxide films grown naturally at room temperature have been measured by two different methods on polished silicon and germanium, on etched silicon and on cleaved silicon. Several very interesting results have been obtained. These measurements were carried out at the angles of incidence of light - 50°, 61.26° and 70°. The kinetics of oxidation of a silicon sample cleaved in air has been studied during a period of more than 20 days. Preliminary measurements have also been carried out on a silicon sample cleaved in a liquid (toluol).

Considerable progress has also been made in the instrumentation of the various accessories to the ellipsometer - in particular for the rapid determination of the ellipsometer readings automatically. This will be of immense help to follow the rate of oxidation of freshly cleaved silicon samples in the initial-take-up region. During the course of this work the ellipsometer components had to be recallibrated and checked for correct orientation by two techniques different from that mentioned in the last report. For the sake of completeness and also since one of the methods adopted has been described only in Eastern European Literature, they are also included here.

On the theoretical aspect of this project, the case when the light is incident from a denser medium like a liquid on to the surface of the film - in other words from a denser to a rarer medium - has been analyzed in detail for the case when the angle of incidence is greater than the critical angle, making use of the theory developed and reported in the last semiannual report.

2. INSTRUMENTATION

It is well known that the surfaces of a freshly cleaved silicon surface get contaminated in a fraction of a second on exposure to the room air. In fact as Archer [1] has shown that even under a vacuum of 3×10^{-7} mm of Hg, a monolayer coverage of an oxide layer on a freshly cleaved silicon surface takes less than 10 minutes. Hence under these circumstances if a knowledge of the kinetics of oxidation in the initial take up region is required, one should be able to make this measurement continuously and at the same time, the time taken for one individual measurement must be much less than 5 - 10 seconds. With this in mind, an automatic high speed scanning cum recording system has been designed, built and incorporated in the ellipsometer.

Fig. 1 shows a block diagram of the entire experimental setup. The light source is a high intensity Mercury arc employing a regulated dc power supply and an operational control system to provide a constant output intensity. The light from the lamp passes through a monochromater or a series of filters to provide the correct monochromatic wavelength. The chopper is the mechanical type to provide an interrupted output frequency of 104 cps. The chopper has a built-in 'reference voltage' and this signal is fed into the reference input of the Lock-in Amplifier. The light beam enters the ellipsometer and is polarized by the Polarizing nicol. The polarizer is attached to a large worm gear which is driven by a synchronous motor through a variable speed ratio control. The worm gear ratio was so chosen that one revolution of the worm exactly rotates the polarizer through 1°. The shaft on which the driving worm is mounted has a photocell revolution counter which is connected to the motor drive control. The photocell output is put through a pulse shaper to provide a marking pulse for the chart recorder and

1. R. J. Archer and G. W. Gobeli, J. Phys. Chem. Solids 26, 343 (1965).

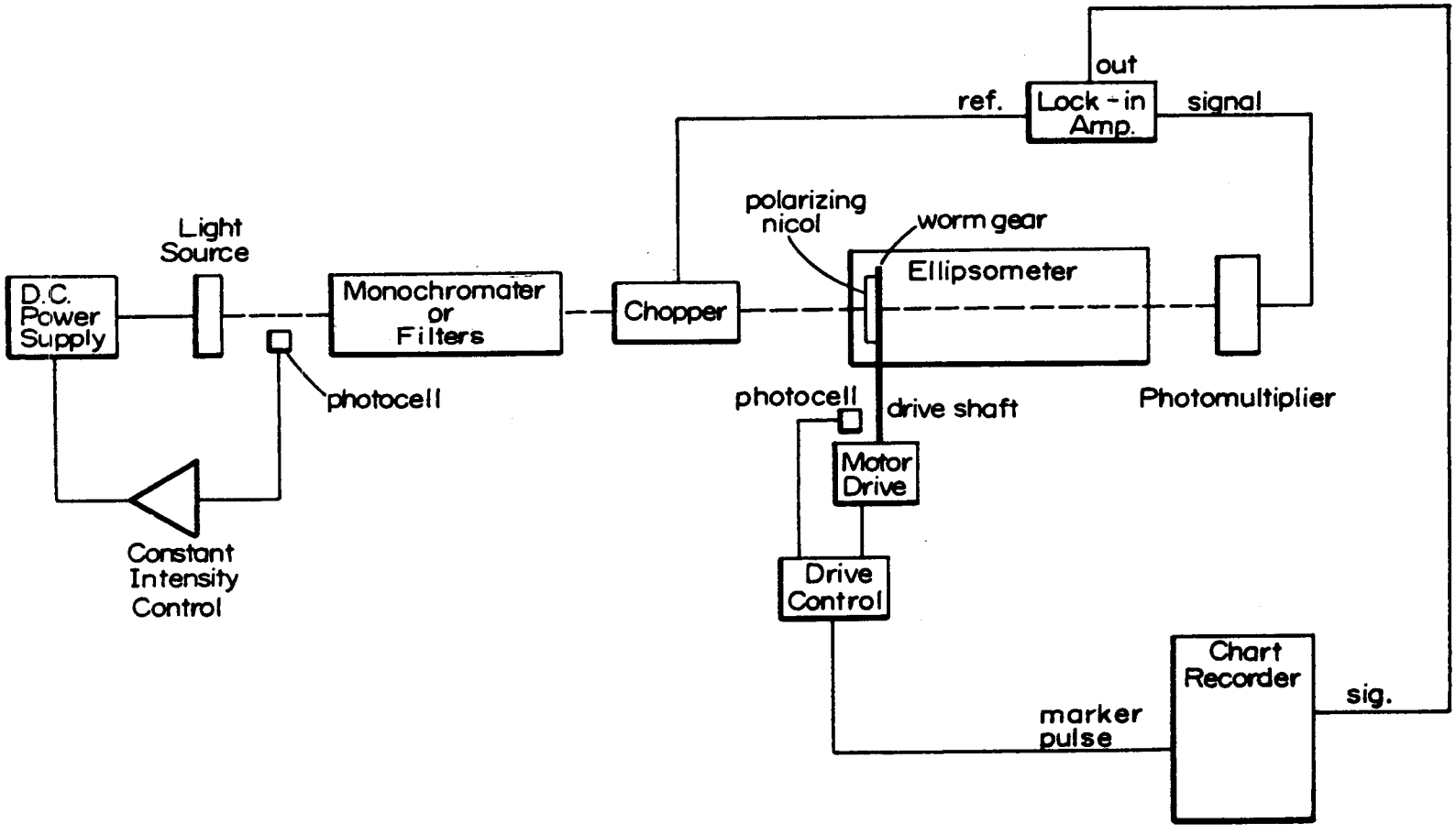
D.C. Power Supply
Light Source
Monochromater or Filters
photocell
Constant Intensity Control
Chopper
ref.
Lock - in Amp.
out
signal
polarizing nicol
worm gear
Ellipsometer
Photomultiplier
photocell
drive shaft
Motor Drive
Drive Control
Chart Recorder
marker pulse
sig.

Figure 1

at the same time acctuate a relay counting network. The motor drive control through the relay counting network provides a sweeping control by rotating the polarizer a set number off degrees, again reverses the direction and continues the operation. The speed of the motor and the variable speed control are so selected that the polarizer will be driven at a rate of 1°/sec. Since the chart recorder has a chart speed of 1"/sec, this combination provides an output reading 1°/c" sec. The chart paper graduations enables a reading accuracy of ±0.02°. The marker pulses which are printed on the chart are directly correlated to the number of degrees of rotation of the polarizer with the distance betwenn two consecutive marks equalling 1" or 1° of rotation. Detection of the output light from the ellipsometer is done by a photomultiplier tube cooled to liquid nitrogen temperature to reduce noise. The photomultiplier provides the input signal for the Lock-in Amplifier and the output from the Lock-in Amplifier is then fed to the chart recorder.

Currently this automatic scanning system is undergoing final testing after assembly.

3. EXPERIMENTAL

A: The precision callibration of the different ellipsometer components namely the polarizer, analyzer and the quarter wave plate, was carried out as follows:

(i) Monochromatic light linearly polarized by the polarizer was allowed to be incident on a vitreous silica plate at the angle of incidence equal to the Brewster angle (ϕ_B = 55°40 for λ5461Å). A mercury arc with an appropriate interference filter isolating λ5461Å was used as the light source. Since the vitreous silica behaves like a nonabsorbing dielectric material at this wavelength, the intensity of the reflected light with the component parallel

to the plane of incidence is zero, provided the light is incident at the Brewster's angle. There might be a slight complication due to the fact that a thin surface film is usually present on each material preserved at room temperature in normal atmosphere. But with silica the situation is rather good from this point of view because, the thickness of the surface film on vitreous silica is usually extremely low and thus it seems to be a suitable material for our purposes. It is rather easy to find the position of absolute minimum of light by rotating the polarizer. This value fixes the position of polarizer. During this calibration of the polarizer, the analyzer and the quarter wave plate were removed from the ellipsometer. Initially the calibration was performed with the naked eye. After establishing the position of polarizer approximately the polarizing nicol is adjusted in its graduated circle such that when the plane of the polarized light is parallel to the plane of incidence the reading on the circle of polarizer corresponds to 0°. The final adjustments were carried out with the help of the photoelectric system described in the earlier report. Using the same arrangement the position of the polarizer is established. The results of this measurement is presented in Table I to show the accuracy of the adjustments.

Table I

	P(°)	Δ_+	Δ_-
1	359.95	0.058	
2	90	008	
3	85		0.042
4	86		032
5	90	008	
6	94	048	
7	89		002
8	90	008	
9	85		042
10	88		012
	3598.92	0.130	0.130

$$\delta P = \frac{5}{2} \frac{\Sigma\Delta_+}{n\sqrt{n-1}} = \frac{\Sigma\Delta_+}{12}$$

where n is the number of measurements

$\bar{P} = (359.89_2 \pm 0.01)°$ or $P = (359.89 \pm 0.01)°$

It is seen that the accuracy of the setting of the position of the polarizer seems to be quite reasonable.

After thus establishing the position of the polarizer, the analyzer was put back into its own place in the ellipsometer. Keeping the position of the polarizer fixed, the analyzing nicol was adjusted to be in the "crossed" position with respect to the polarizer and the graduated circle of the analyzer was then suitably fixed. The following table gives the results of the checking of the final setting of the analyzer.

Table II

	A	Δ_+	Δ_-
1	180.00	0.013	
2	179.97		0.017
3	180.00	.013	
4	180.00	.013	
5	180.00	.013	
6	179.97		017
7	179.97		007
8	180.00	.013	
9	179.98		007
10	179.97		017
	1799.87	0.065	0.065

$$\delta_A = \frac{\Sigma\Delta_+}{12}$$

$A = (179.98_7 \pm 0.005)^\circ$ or $A = (179.99 \pm 0.01)^\circ$

The accuracy of the analyzer adjustment is better than in the case of polarizer, thus indicating that the <u>relative</u> position of crossed polarizer and analyzer may be determined more precisely than their <u>absolute</u> positions with respect to the plane of incidence.

Lastly the setting of quarter-wave plate was fixed as follows. The polarizer and the analyzer were first adjusted to be in the crossed position. When the quarter-wave plate was introduced in the optical path, in general there will be a restoration of light intensity, unless one of the axes of

quarter-wave plate (either "faster" or "slower") coincides with either the plane of polarization of the polarizer or of the analyzer. Hence the setting of the quarter-wave plate was adjusted and fixed in such a way to yield minimum intensity of light transmitted by the optical train.

The typical results of the checking measurements are given in Table III.

Table III

$P_1 = 89{,}89$, $A_1 = 89{,}99$

	Q	$\Delta+$	$\Delta-$	Q	$\Delta+$	$\Delta-$
1	168.80	0.003		78.80	0.003	
2	80	003		80	003	
3	80	003		80	003	
4	80	003		82		0.017
5	80	003		80	003	
6	348.82			258.80	003	
7	80	003	0.017	80	003	
8	81			80	003	
9	80	003	007	81		007
10	80	003		80	003	
	8,03	0,024	0,024	8,03	0,024	0,024

$Q = (78{,}80_3 \pm 0{,}00_2)^\circ$ or $Q = (78{,}80 \pm 0{,}01)^\circ + n.90^\circ$ $(n = 1,2,3)$

The accuracy of the adjustment of the quater-wave plate (Q) is pretty good, in fact much better than in the case of analyzer.

(ii) The second method for the calibration of the settings of the polarizer and the analyzer has been described by Vasicek[2] which was originally developed by Zahrednicek[3]. The half-shade method is usually used in this type of calibration. A Nakamura double-plate is situated just in front of the analyzer and a Ramsden's eye-piece connected with the objective in the focal plane of the objective of the telescope is used.

2. Vasicek, A. Mereni a ytrareni tenkych vrstev v optice (in Czech) Publishing House of the Czechoslovakian Academy of Sciences, Prague 1957, p. 26.

3. Zahradnicek, J., Casopis pro pestovani matematiky a fyziky, 54,354 (1925).

The first orientation measurement is performed in such a way that for two different angles of incidence one greater and one smaller than the Brewster angle ϕ_B of the material (usually glass plate) situated on the table of the ellipsometer , the position of the polarizer is changed in steps of 10° from 0° to 360° and correspondingly the minimum position of the position of the analyzer is determined with the help of the half-shade. The results of the measurements are then plotted in a figure and the cross-over point corresponds to the right positions of the polarizer and the analyzer. But a determination like this is usually rather rough and therefore for a more accurate final determination the following procedure is adopted. For several (at least three) angles of polarizer near its roughly determined position the above method is repeated at several angles of incidence (both smaller and greater than Brewster angle). The results of the measurements are again plotted in a figure and the exact positions of both polarizer and analyzer is determined from this figure.

Because in our case we have known approximately the right positions of the polarizer and the analyzer we have used only this second part of this method for three different positions of polarizer (179°, 180°, 181°) at five angle of incidence (45°, 70°, 75°, 80°, 85°). The results of our measurements are given in the Figure 2. The results of this determination are given together with the results obtained by means of the method described previously in the Table IV.

Table IV

The results of the adjustment of the fundamental positions of the polarizer and the analyzer by the methods (i) and (ii).

	Method (i)	(ii)
Polarizer (P)	359,89°	359,89°
Analyzer (A)	89,99°	89,98°

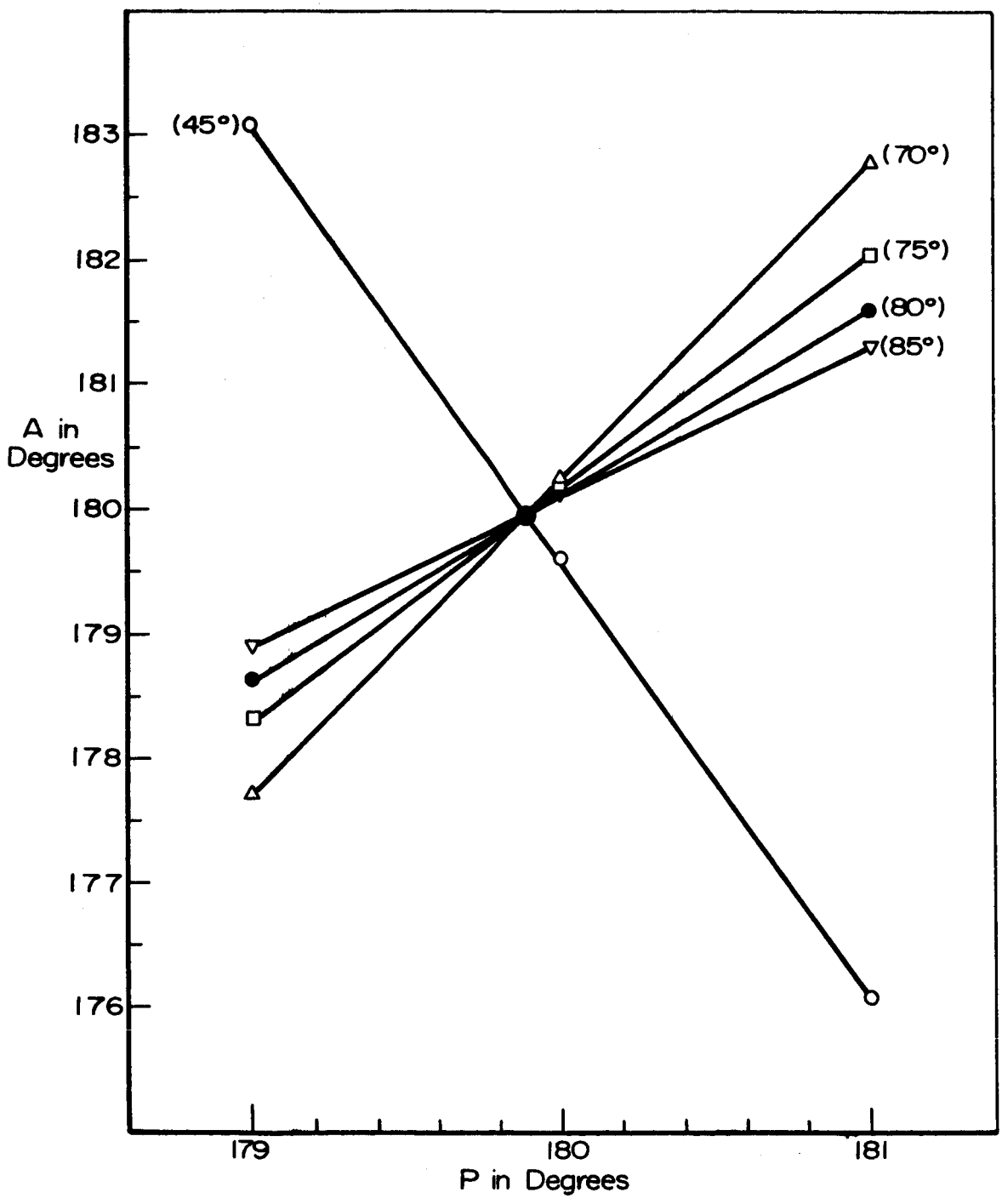
183
182
181
180
179
178
177
176
A in Degrees
(45°)
(70°)
(75°)
(80°)
(85°)
179
180
181
P in Degrees

Figure 2

These fundamental positions for both the polarizer and the analyzer correspond to the polarizing plane parallel with the plane of the incidence of light. The accuracy is approximately 0.01° for all positions. It is evident that the agreement between the results obtained from both these methods is almost complete.

The first method (i) is more simple but sometimes it could fail or does not give quite precise results due to possible existence of naturally grown surface films on the dielectric used (glass plate, vitreous silica), whereas the second method (ii) is a little more complicated but it seems to be more reliable.

B: To verify the reliability of the method which will be used in future measurements, namely the method developed by Archer[4] and which was described in the last report[5] as arrangement $P_{0-360} Q_{45}$ S A_{0-360}, [here we shall denote it by (a)], we have used a method which is rather different from this one and which is a rather special arrangement of the method described in the last report[6] as arrangement P_{45} S Q_{0-360} A_{0-360}, [here we shall denote it by (b)]. In the case (b) we have used the half-shade technique and a method described by Vasicek[2]. In this arrangement this method may be used with sufficiently high accuracy for the angles γ up to 8° (for higher angles the accuracy is not so high but the results are still reasonable up to γ of about 15°). The method of the measurement is as follows (i) the polarizer is fixed at an angle of 45° to the plane of incidence; (ii) the

4. Archer, R. J., J. Electrochem. Soc. 104, 619, (1957).
5. Second semiannual Report on Research on "The Mechanism and Kinetics of Oxidation of Silicon in Air" NASA Grant No. NGR-39-009-042, June 20, 1966 p. 12.
6. ibid., p. 7.

analyzer is adjusted with the help of the half-shade till a minimum is obtained - A_1; (iii) the quarter-wave plate is introduced in such a way that the fast direction of the compensator is parallel to A_1; (iv) the analyzer is adjusted again with the help of the half-shade, to a new minimum position- A_2. Then the angles which determine the parameters of the elliptically polarized light obtained on reflection of the linearly polarized light from the silicon sample with an oxide film, may be determined from the measured values in the ideal case in the following way:

$$\gamma = (A_2 - A_1) \tag{1}$$

$$X = A_1 \tag{2}$$

Usually we do not succeed in the setting up the positions of A_1 and A_2 quite exactly because of the inherrent inaccuracies of the measurement and due to the fact that usually we do not set up the surface of the specimen exactly perpendicularly to the plane of incidence. In this case a correction in the determination of the angle X is necessary according to the scheme given in the Table V where a typical result of measurement is presented for polished germanium with (111) orientation, [ρ = 5Ωcm, p-type].

Table V

Typical Result of the measurement of the angles γ and X for polished Ge at the angle of incidence ϕ = 50° by the method (b)

P	A_1	Q	A_2	(A_2-A_1)
45°	143.79	45.65	148.07	4.88
		135.65	138.20	5.01
135°	36.56	119.02	31.07	5.49
		29.02	41.70	5.14

$$\delta = \frac{-180+(A_1^{45} + A_1^{135})}{2} = \frac{-180 + 179.75}{2} = 0.12°$$

$$X = A_1^{135} - \delta = 36.56° + 0.12° = 36.68°$$

The differences between the values γ are rather high and are due the reasons mentioned above. Nevertheless the accuracy of the result is quite

reasonable. For the case given in Table V we get $\gamma = (5.13 \pm 0.13)°$.

Similar measurements were performed on polished, etched and cleaved silicon samples. All the silicon samples were of (111) orientation but of unknown purity and type, though generally the purity of the silicon specimens was rather high. The same specimens were measured with the method (a), as well. The typical results of these measurements are given in Table VI where all possible combinations of the polarizer and analyzer position were used to demonstrate the accuracy of the measurement.

Table VI

Typical results of the measurement of angles Δ and ψ for polished Ge at $\phi = 50°$ and $Q = 127.61°$.

P	A	P	A
219,60	306,92	39.71	36.34
219,35	127,12	39.46	36.50
39,35	127,11	39.46	36.49
39,39	307,05	39.50	36.43
129,61	233,93	39.72	36.69
129,30	54,05	39.41	36.57
309,73	53,91	39.83	36.71
309,73	233,99	39.64	36.63

We get the following results: $P = (36.59 \pm 0.25)°$, $A = (36.55 \pm 0.21)°$ Due to the relations (Vide ref. (5), p. 12)

$$\Delta = 90° + 2P$$

$$\psi = +A$$

we get

$$\Delta = (163.18 \pm 0.50)°$$

$$\psi = (36.51 \pm 0.21)°$$

In Table VII are compiled the results of the measurements of the angles Δ and ψ by both methods (a) and (b) for several samples of silicon and germanium with different surface treatment.

Table VII

Angles Δ and ψ determined by the methods (a) and (b) for polished germanium and for polished, etched and cleaved silicon determined from the measurements at the angles of incidence 50°, 61.26° and 70°.

Material	Surface Treatment	ϕ(°)	Method a Δ_a	Method a ψ_a	Method b Δ_b	Method b ψ_b
Ge	polished	50	169.18	36.55	10.50	36.82
		61.26	160.54	30.53	19.83	30.03
		70	145.18	23.49	34.93	23.57
Si-1	polished	50	175.66	34.39	4.43	34.45
		61.26	171.24	27.67	8.64	26.72
		70	126.06	16.90	17.24	16.85
Si-2	polished	61.26	162.29	26.38		
		70	142.14	17.22		
Si	etched	70	744.38	12.89	35.28	13.18
Si	cleaved	70	167.96	11.91	12.08	11.90
Si	etehed	70	179.05	11.77	Archer[7] extrapolated for clean surface	
Si	etched	61.26	179.43	23.40	Archer[4] extrapolated for clean surface.	
		70	178.70	12.10		
Ge	etched	61.26	166.78	29.58		
		70	154.73	21.54		

Before beginning the discussion of the data given in the Table VII it would be worthwhile to consider the various causes for the observed discrepancies. The possible sources of the differences in the measured values of the angles Δ and ψ, and hence γ and χ are:

1) Instrumental errors in the measurement - it is impossible to avoid it completely. It is only possible to lower it either by using the photomultiplier or in the case that we measure only with eye to use the highest possible light intensity and to repeat the measurements several times.

7. Archer, R. J., J. Opt. Soc. Amer., 52, 970 (1962).

2) The improper adjustment of the polarizer and analyzer and quarter-wave plate: As we have shown previously it is rather easily and precisely possible to adjust the analyzer perpendicularly to the polarizer. It is possible still more precisely to adjust the position of quarter-wave plate with respect to the polarizer and analyzer. The greatest possible error may be in the setting of the polarizer. But it is possible to exclude the systematic difference in the measured value of the angles Δ and ψ or γ and χ due to the poor adjustment of the polarizer by the measurement at symmetric positions of P with respect to the plane perpendicular to the plane of incidence; in other words by measuring at the positions $Q_1 = 45°$ and $Q_2 = 135°$ in the method (a); and for the positions $P_1 = 45°$ and $P_2 = 135°$ in the method (b).

3) The surface of the sample may not be exactly perpendicular to the plane of incidence. This error is impossible to exclude in our way of measurement in any other way than by the best possible adjustment. This is not so easy to do for the etched or cleaved samples since their surfaces are usually not mirror-like. One normally observes the image of the pinhole corresponding to the entrance slit of the collimator in the eye-piece. But this image is usually not too sharp due to the reflection on the not quite flat surface of the sample (cleaved or etched) and also its intensity is rather low when the aperture of the iris diaphragms of the collimator and telescope are small. It is rather difficult to estimate the exact magnitude of this difference but it is believed that it will not be too high. At least our experiences lead to the conclusion that in this case the errors are within the limits of accuracy of our measurements.

4) The sample may not be exactly in the center of the table of the ellipsometer (see Fig. 3). Let us denote by Δx to be the perpendicular distance

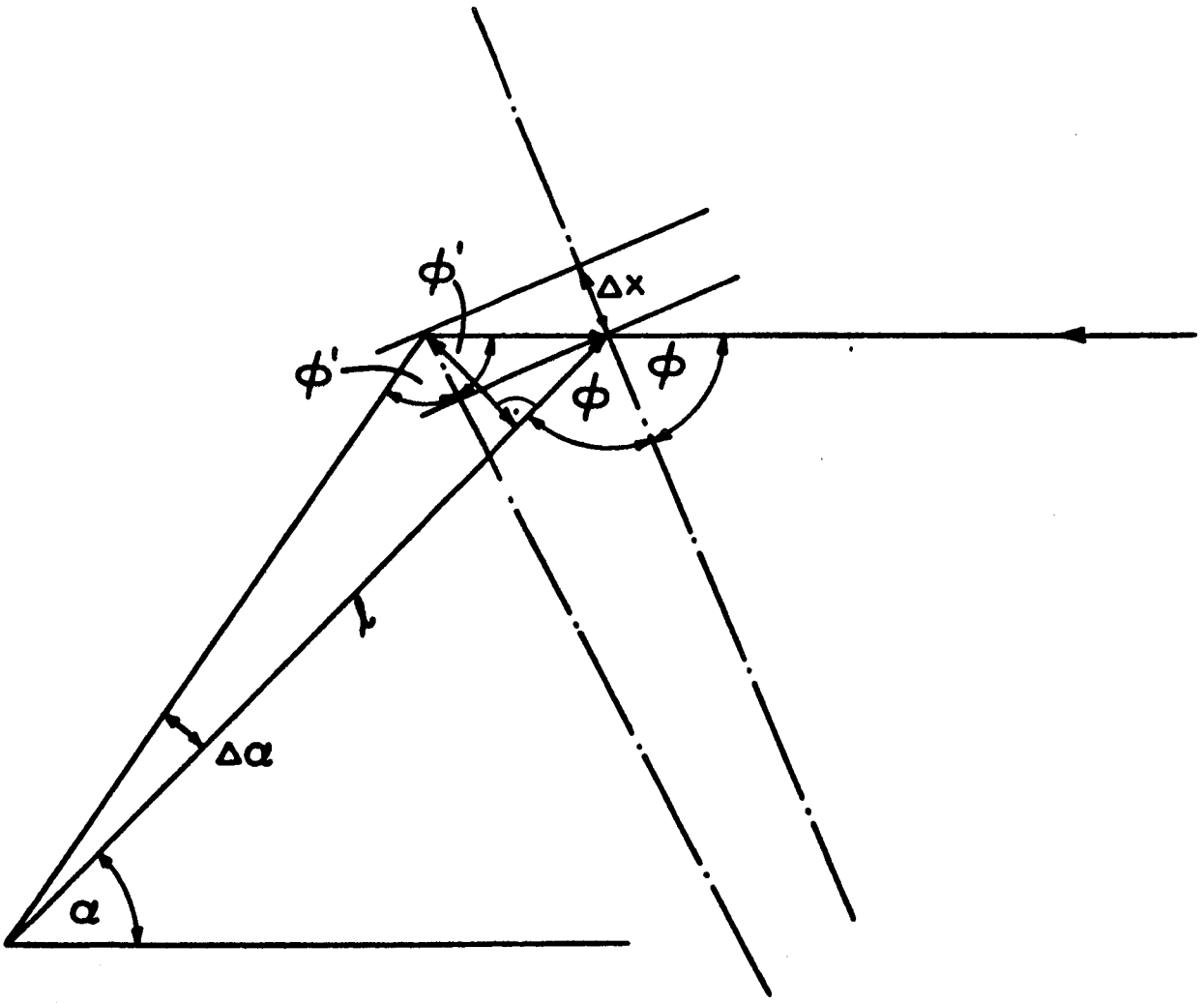

Figure 3

of the surface of the sample from the center of the table, ℓ the distance between the center of the table and the objective of the telescope ϕ, ϕ' the angles of incidence in the case when the sample is, and is not in the center of table of the ellipsometer. The meaning of other symbols is clear from the figure. It can be deduced from simple trigonometric theorems that,

$$\Delta \alpha = 2\Delta\phi = 2(\phi - \phi') = \frac{\Delta x}{\ell} \frac{\cos 2\phi}{\cos \phi}$$

Let us choose the following typical values:
$\phi = 70°$, $\Delta x = 1mm$, $\ell = 200mm$. Then we get $\Delta\phi = 16' = 0.27°$. This introduces an error in ϕ for silicon in the region of angle of incidence 60-70°, of approximately $(0.27° \times 1.3) = 0.35°$. Even if we suppose $\Delta x = 0.5mm$ the error is about 0.18° which exceeds the error in these measurements. It seems that this error is most significant mainly for cleaved surfaces and during the measurement under a liquid, as will be described below.

Similarly for Δ we get a change of $\delta\Delta = 1.10°$ corresponding to a change in $\delta\phi = 1°$ near $\phi = 70°$ for $\Delta = 13°$. In other words, the relative change in Δ is about 8% for the change $\delta\phi = 1°$ near $\phi = 70°$. Thus in the typical case considered above, we get a change of about 2% in Δ due to the above mentioned possible error in ϕ of about 0.27°.

There are several interesting features of the results given in Table VII. (1) There is complete agreement between the results for both angles Δ and Ψ within the accuracy limits of the measurements for both the methods; (2) There is a remarkable difference between the values of Ψ for the cleaved, polished and etched silicon samples for the same angles of ϕ. A similar difference is also noticed between the values of Ψ for polished and etched samples of germanium. This difference cannot be explained by the presence of the oxide (surface) films alone in spite of fact that the cor-

responding differences lie in the right direction (see Appendix II, ref 9) because it is too high. It is evidently connected with the difference in the nature of the surface film of the etched samples.

C: The time dependence of the growth of surface oxide film on cleaved silicon surface in air at room temperature has been studied. Neither the temperature nor the humidity were especially controlled in the present measurements. The medium temperature has been T = 22°C and the humidity 30%.

The specimen 1 was cleaved in the arrangement described by Gobeli and Allen[8] (see also ref. 5, p. 4) and alligned as far as possible on the table of the ellipsometer. The method (a) $P_{0-360}Q_{45}S\ A_{0-360}$ was used in the measurement in a special arrangement. The analyzer was fixed (at least during the first hour of the measurement) at the position deduced both from our own previous measurements and from Archer's values of the angle ψ which is determined directly by the analyzer position (vide. ref. 5). It is possible to use this arrangement since the angle ψ depends only slightly on the oxide film thickness for films thinner than about 25Å . (vide. ref.9 Appendix II, d = 25Å corresponds approximately to $\delta = 2$ and corresponding change of ψ is 0.10° for the index of refraction of oxide film $n_1 = 1.460$). In fact even for the case when A is adjusted not quite precisely, it has only small influence on the precise value of the angle Δ. In the technique just described, it is most important to follow the change of the film thickness, hence the change of the angle Δ (or P in fact) during the measurements. Even though the position of the analyzer would not be quite correct one can get the right dependence of the oxide film thickness vs time. Only

8. Gobeli, G. W. and F. A. Allen, J. Phys. Chem. Solids 14, (1960), 23.

9. First Semiannual report on research on "The Mechanism and Kinetics of Oxidation of Silicon in Air". NASA Grant No. NGR-39-009-042, Dec. 20, 1965.

a slight difference in the absolute value of oxide film thickness can occur in such a case.

Our measurements were performed at an angle of incidence $\phi = 70°$ with the eye. The typical mean error in the measurement deduced from ten measurements was $\delta P = \pm 0.10°$ implying $\delta\Delta = \pm 0.20°$. The mean error in the measurement was determined according to the formula

$$\delta P = \frac{5}{2} \frac{\Sigma \Delta P_+}{n\sqrt{n-1}} = \frac{5}{2} \frac{\Sigma \Delta P_-}{n\sqrt{n-1}}$$

where n is the number of measurements, ΔP_+ (ΔP_-) is the positive (negative) difference of the measured value of the angle P from the average value $\bar{P}$ deduced from n measurements. The accuracy of our results is much lower than that reported by Archer[4] who gives $\delta\Delta = 0.04°$. The main reason for this difference is in the fact that in our case the surface of the cleaved specimen useful for the measurements has been approximately 1-2mm^2 and therefore the intensity of reflected light has been extremely low. Further in our experiments some unavoidable spurious reflections from another part of the crystal was also present. It is quite possible that the optical properties of these two regions are not the same. Nevertheless the Fig. 4 shows that our results may be expressed with sufficient accuracy by the formula

$$L = a + b \ln (t - t_0)$$

which is essentially the same as Archer has observed for the oxidation of etched silicon on air. We have measured the same dependence for another cleaved sample as well. The results of the measurements for the specimen 2 are also presented in Fig. 4. These measurements were performed by both methods (a) and (b) at the angles of incidence $\phi_1 = 61.26°$ and $\phi_2 = 70°$. It is seen that all the results of the measurements lie on the same line within the accuracy limits of the measurement.

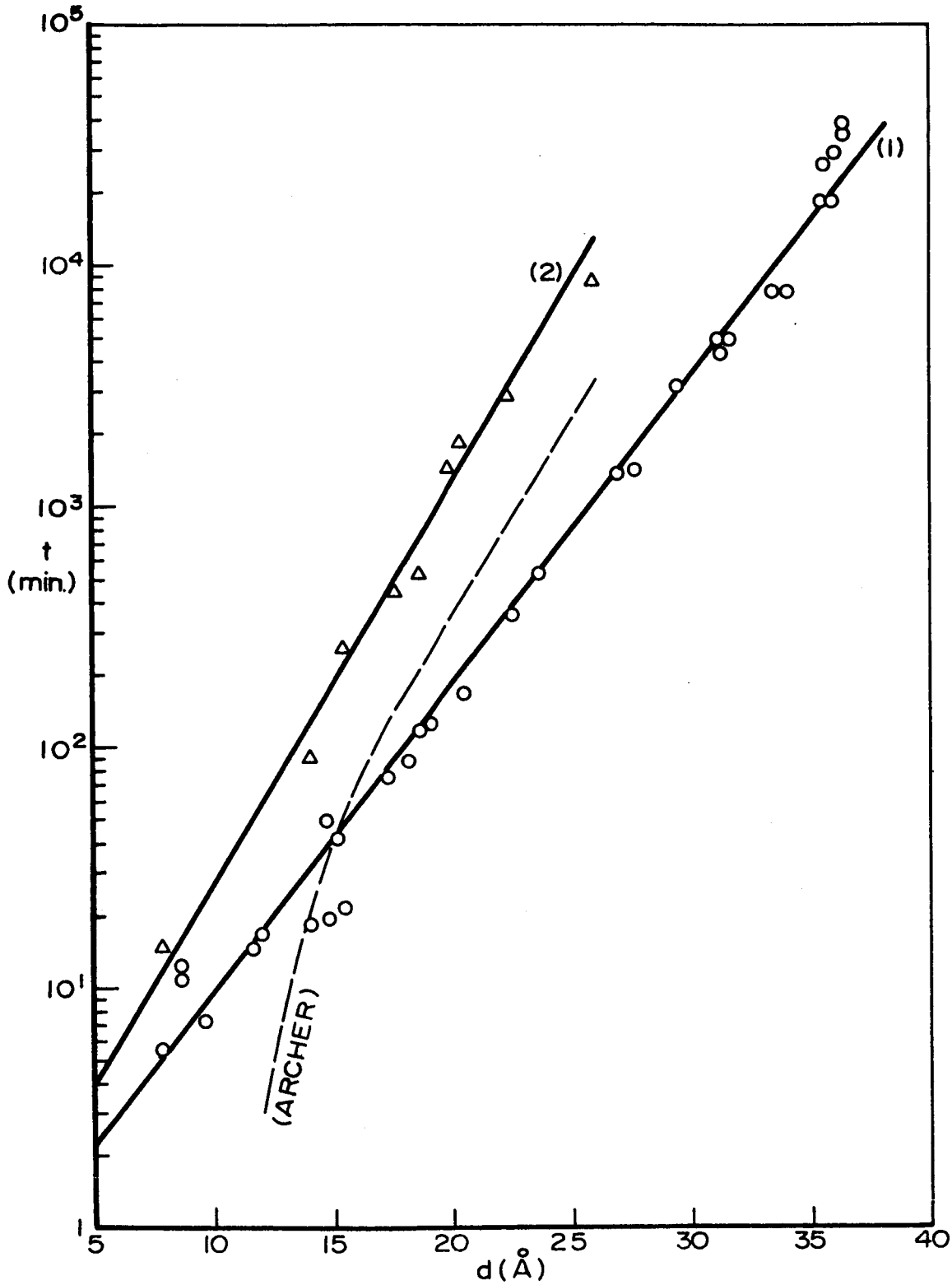

Figure 4

There are several remarkable though not essential differences between all the results as seen in the Fig. 4.

The oxide film growth rate is found to be in the whole region of measured time interval and film thickness simple semilogarithmic for both the specimens with the oxidation rate of 7.9Å/dec for the first one and 6.4Å/dec for the second. Archer's measured rate is slightly more complicated, with a much slower oxidation rate at the initial stage and with an oxidation rate of 6.80Å/dec. at a later stage which is about 14% lower than our own value for the first specimen but of about 6% higher than for the second one. The possible explanation of these differences will be discussed later.

D: As was discussed in detail in the last report (Vide. ref. 5, p. 15 et seq) thus far all the theoretical and experimental investigations have been carried out only for the case when the light is incident from air on to the film i.e. from a rarer on to a denser medium. It was also shown there theoretically that by allowing the light to be incident from a denser medium like a liquid, on to the film one can increase the sensitivity considerably. During this report period preliminary measurements of the angles Δ and ψ for a sample in a liquid have been carried out. We have used two earlier specimens of cleaved silicon immersed in toluol. The measurements were made at $\phi = 70°$ by the method (a). However the following experimental difficulties were noticed in this type of measurement:

1) both the windows of the vessel containing the liquid and the experimental sample must be exactly perpendicular to the incident and reflected light. If this is not the case then it will be necessary to adjust the relative orientation of the sample whenever the liquid is added or drained out of the vessel, due to the complicated refraction of the light

beam inside the vessel. It is necessary first to adjust the vessel so that the light beam is incident exactly perpendicularly on the entrance window and goes out of the vessel exactly perpendicularly through the exit window. This is done by means of adjusting the table of the ellipsometer before the measurements starts. Then after cleaving the specimen inside the vessel in liquid it is necessary to adjust the specimen only by means of the device, holding the sample. The table of the ellipsometer has to be fixed during the above adjustment of the specimen.

2) Often one observes a difference between the angles Δ measured in air with and without the vessel (For example see Table VIII, specimen 2).

Table VIII

Measurement of the cleaved silicon surface in pure toluol

Specimen 1				Specimen 2		
Δ	ψ	where measured	Q	Δ	ψ	where measured
168.48	12.09	in air	127.55	164.52	12.46	in air
168.64	11.99	in air	37.55	163.30	12.06	in air in the vessel
166.50	12.43	in air in the vessel	37.55	371.4	2.20	in toluol
340.48	2.19	in toluol in the vessel	127.55	17.12	12.14	in air
346.28	2.36	in toluol in the vessel	37.55			

This effect is probably due to the possible surface film on windows of the vessel and this will have much greater influence in the case when the light is incident not quite perpendicularly to the entrance and exit windows.

3) One notices, as for example in specimen (2) Table VIII, the angle Δ in air is different before and after immersion in the liquid. Probably some film either of toluol or of other constituent has remained on the silicon surface, even after the liquid has been drained and the sample dried.

4) The intensity of light reflected from the specimen in the liquid (toluol) is extremely low so that only rough estimate of the angle Δ could be made in our arrangement. The accuracy of polarizer setting has not been better than 0.5° implying that the accuracy of Δ is not better than 1°. The extremely small intensity of light in this case occurs for the following reasons: a) due to the lowered reflectivity of the surface-toluol-silicon surface, which appears to be the main cause and b) the losses due to reflection on windows and due to a slight absorption and some scattering of light in toluol.

In view of the facts mentioned above it is rather difficult to evaluate the measurements carried out in the liquid (toluol). Nevertheless the following procedure was adopted: From the measurements made in air it is rather easy to evaluate the true value for the thickness of the oxide film on a specimen, assuming the index of refraction n_1 =1.460 for SiO_2 film. We have used the table in Appendix II(ref.9) for this numerical evaluation. Then we evaluated the corresponding values Δ and Ψ for the same film thickness, for the measurement in toluene with the index of refraction n_o = 1.496 from the tables computed as described in the last report. This theoretically enumerated values of Δ and Ψ angles for two specimens are given in the Table IX, along with the experimentally measured values in toluol.

Table IX

The comparison of the experimental and theoretical values of the angles Δ and Ψ for Si with silicon dioxide film in toluene.

	Specimen 1		Specimen 2	
	Δ(°)	Ψ(°)	Δ(°)	Ψ(°)
theoretical	343.2	2.72	339.9	2.20
experimental	343.3	2.27	341.4	2.31

The agreement between the enumerated and experimental values is quite good when we take into the account the facts mentioned above. The thickness of the SiO_2 films for the specimens are: $d_1 = 31.6Å$ (specimen 1) and $d_2 = 44.0Å$ (specimen 2). Hence we can conclude on the basis of the existing results: (i) the adjustment of the system must be performed extremely carefully to assure that the light beam is perpendicular to both the windows and the surface of the specimen at the same time; (ii) it is necessary to study the influence of the immersion of the specimen in the liquid on the quality of the surface; (iii) the light intensity must be increased, at least when measurements are performed with the eye.

DISCUSSION: As we had concluded in an earlier paragraph our results concerning the oxidation of cleaved silicon surface with the orientation (111) are qualitatively the same as those reported by Archer[4] for etched surfaces. The only difference is the fact that our observed rate of oxidation is the same down to the lowest times detected in our experiment while that observed by Archer is of another type in the intial stage. The exact cause for this discrepancy is not clear at this moment and it will be necessary to carry out in future detailed measurements varying systematically all the parameters which could cause such a discrepancy, e.g. impurity concentration and the type of the impurities, surface orientation, humidity and the exact composition of the ambient etc.

Our curves are in reasonable agreement with the Elovich[10] equation,

$$\frac{dL}{dt} = Ae^{-BL} \qquad (1)$$

10. S. Ya. Elovich and C. M. Zhabrova, Zhur. Fiz. Khim. USSR, 13 (1939) 1761, 1775.

Archer[4] could also represent his data by a similar equation. We get after integration

$$L = a + b \log (t - t_o) \qquad (2)$$

There are three constants in the equation (2) all of which cannot be determined uniquely from our results. The constant b can be determined from the experimental results but it is necessary to estimate the value of either t_o or a while the other can then be determined from the curve. Let us suppose that t_o = 1 min, which implies that the equation (2) holds only after one minute. To prove this suggestion it would be necessary to measure this dependence at times considerably less than 1 minute after cleavage in air. But it is reasonable to expect that just after cleaving the crystal the oxidation rate of the surface will of another type due to the essentially different mechanism of the interaction between the pure silicon surface and oxygen and then later between the system consisting of silicon + silicon dioxide (or absorbed or chemisorbed oxygen and the oxygen - eventually air). It is sure that up to now we can say nothing definite about this first oxidation stage immediately after the cleaving. This particular problem has been studied by Archer[1,11] in ultrahigh vacuum. In spite of the fact that the conditions under which Archer studied his dependence were rather different from ours (high vacuum - the oxygen pressure was of the order 10^{-7} mm Hg) it is possible to estimate that at least several qualitative features will be similar at normal atmosphere, too. Archer came to the conclusion that a monolayer of chemisorbed oxygen on cleaved silicon surface in high vacuum (the oxygen pressure of the order 10^{-6} - 10^{-7} mm Hg) is formed relatively rapidly and afterwards the process either of chemi-

11. Archer, J. Ellipsometry in the measurements of surfaces and thin films (ed. G. E. Passaglia, R. R. Stronberg, and J. Kruger, National Bureau of Standards Miscellaneous Publication), p. 255.

sorption or oxidation is very slow and we can estimate that the dependence of the thickness of chemisorbed oxygen film or oxide film on time, is then qualitatively different. The thickness of the first monolayer of chemisorbed oxygen is estimated to be 2.5 - 2.8 Å by Archer.

When we suppose in our case that t_o = 1 min. then it is possible to get from our experimental results for the two crystals studied the following values of the constant a:

a = 2.6Å (for the specimen 1) and a = 2.2Å (for the specimen 2). It must be emphasized that these values are rather arbitrary (since they are derived from an assumed values of t_o) but nevertheless are quite reasonable and are not in contradiction with our physical conceptions concerning the oxidation of cleaved silicon surfaces.

It is also not difficult to understand the difference between the oxidation of etehed surfaces on air described by Archer[4] and the cleaved surfaces in our case. It is well known that the etched surfaces are always covered with some of the constituents of the etchant or adsorbed water or by an oxide film produced during the etching and which is not quite dissolved, etc. Therefore the initial stage of the oxidation must necessarily be different from that of the cleaved surface which is perfectly clean from a chemical point of view immediately after the cleaving.

It is necessary to remark that in our considerations we have supposed that a film of amorphous silicon dioxide with index of refraction n_1 = 1.460 is formed on the clean surface of Si with optical constants n = 4.050 and k = 0.028 for λ = 5461 Å . This is not necessarily the case especially in the initial stage when chemisorption or adsorption either of oxygen or water vapour takes place. It is impossible to conclude from our experiments whether this assumption is true or not but nevertheless the facts that the value of

ψ does not change significantly for the thickness of the film up to about 35Å and that the thickness of the films evaluated from the measurements at ϕ = 70°, 61.26° and 50° are the same within the experimental accuracy support our consideration that a homogeneous surface (oxide) film on the cleaved silicon surface has grown in the normal atmosphere.

As for the measurements in the liquid it is possible to come to the following conclusions: (i) the experimental results agree very well with the theoretical values enumerated on the supposition: that there is a well defined boundary between the liquid with a definite refractive index and the homogeneous (nonabsorbing) surface film with a definite refractive index. (ii) in the case of SiO_2 films on Si measured at λ = 5461 Å in toluene (or CCl_4) it is convenient to use this method for the measurement of very thin oxide films (approximately for d $\leq$ 75Å in toluene and d $\leq$ 12Å in CCl_4). For greater thicknesses the sensitivity of this method is much lower (Δ depends on d only slightly) and it is not convenient to use the dependence $\psi = f(d)$ as well for the thickness determination in this case, because it is also not too sensitive on one hand and it is rather dependent on the true values of the index of refraction of the film and of liquid (relatively much more than Δ).

4. THEORETICAL

Ultraclean surfaces of silicon can be prepared by cleaving silicon in an inert liquid like carbon tetrachloride and the studies on the oxidation kinetics can be carried out by bubbling oxygen through the liquid and following the changes in Δ and ψ. In such a case light is incident from the liquid on to the surface of the film. The refractive index of the liquid can often be greater than the refractive index of the film, as indeed is the case of CCl_4 (or Toluol) and SiO_2 film combination. When the first

medium is denser than the film we have to consider two possibilities (i) when the angle of incidence ϕ_o is less than the critical angle ϕ_c and (ii) when the angle of incidence ϕ_o is greater than the critical angle ϕ_c. Both these cases have been dealt with in detail in the last report, (Vide, ref. 5, p. 15 et seq). It was shown that in the first case a considerable increase in sensitivity can be attained by working near the critical angle.

For the second case when light is incident on the film at an angle greater than the critical angle, the theoretical expressions for the parameters of the elliptically polarized reflected light were derived in the last report. Detailed numerical computations have now been made with IBM 7074 computer and the important features of the results are discussed below. Before doing so we should call attention to a typographical error in Equation (7) on page 19 of the last report. This equation should read as

$$x = - i \frac{2\Pi}{\lambda} \cdot 2d \left(n_o^2 \operatorname{Sin}^2 \phi_o - n_1^2\right)^{1/2} = - i x'$$

In what follows x' shall be designated by small delta δ. Fig. 5 shows the variation of Δ as a function of δ for various angles of incidence beyond the critical angle, for light incident from CCl_4 with a refractive index 1.4671 on to a film of refractive index 1.100 on silicon. Fig. 6 shows the variation of Δ with δ for various angles of incidence. Here toluol is the liquid medium with a refractive index 1.496 on to a film of refractive index 1.460, the refractive index of vitreous silica. Finally Fig. 7 shows the variation of Δ as a function of δ for an angle of incidence 89°, the liquid medium being toluol. In this case the films on the silicon surface have different refractive indices varying from 1.100 to 1.460. In Figs. 6 and 7 the region of δ from 0 to 40° is shown on an enlarged scale. The main con-

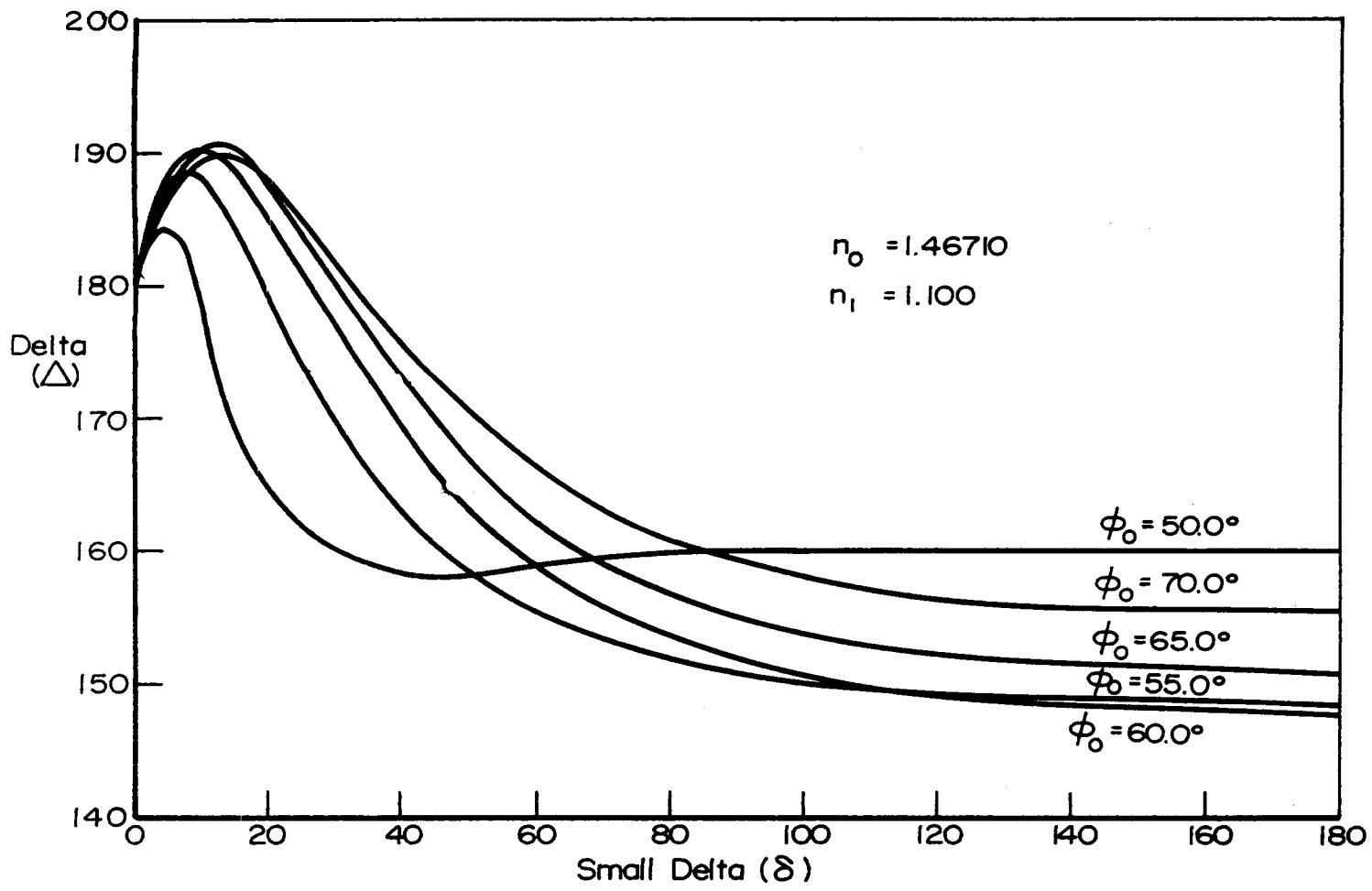
200
190
180
170
160
150
140
Delta
(Δ)
0
20
40
60
80
100
120
140
160
180
Small Delta (δ)
n_0 = 1.46710
n_1 = 1.100
ϕ_0 = 50.0°
ϕ_0 = 70.0°
ϕ_0 = 65.0°
ϕ_0 = 55.0°
ϕ_0 = 60.0°

Figure 5

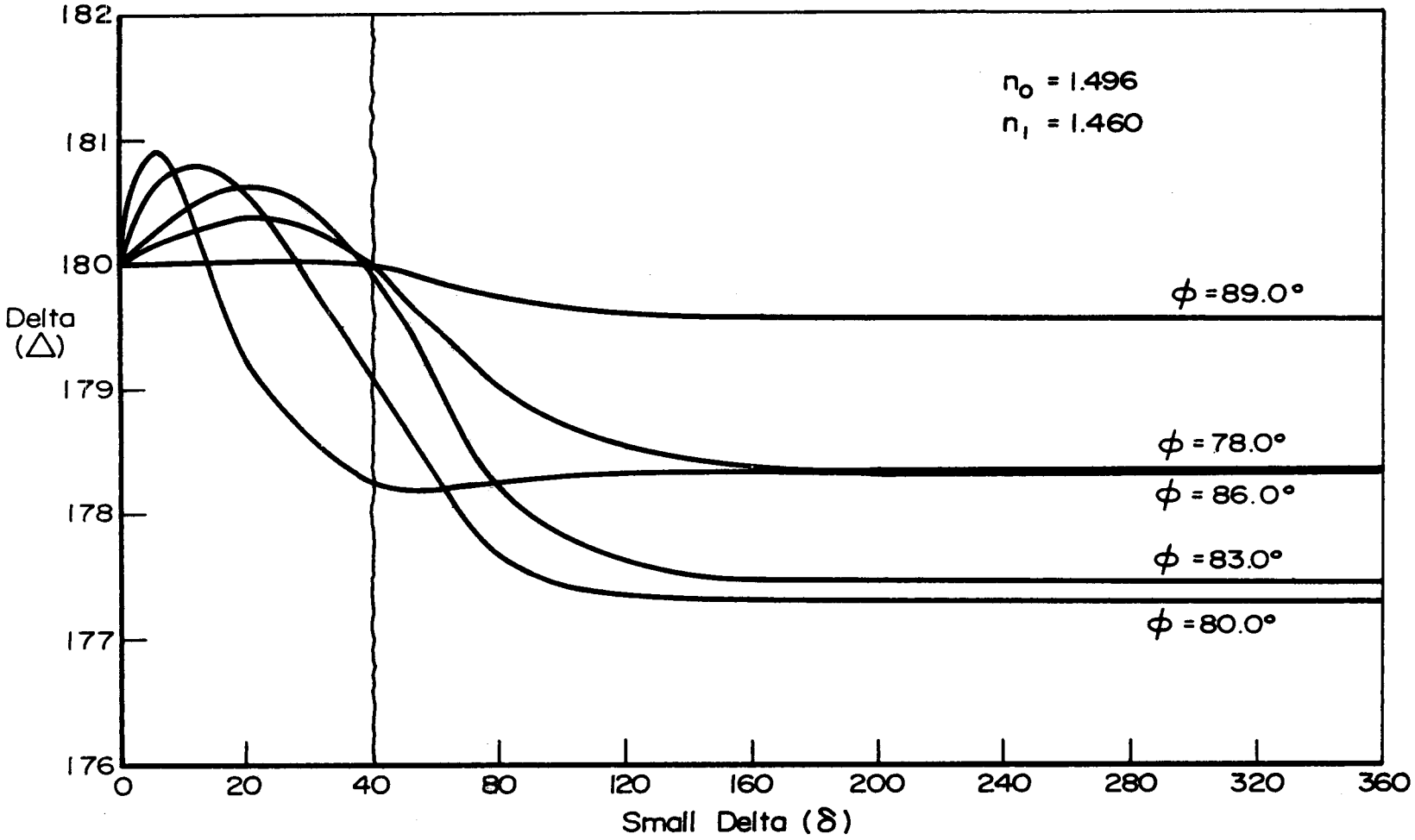
182
181
180
179
178
177
176
Delta
(Δ)
0
20
40
80
120
160
200
240
280
320
360
Small Delta (δ)
n_0 = 1.496
n_1 = 1.460
ϕ = 89.0°
ϕ = 78.0°
ϕ = 86.0°
ϕ = 83.0°
ϕ = 80.0°

Figure 6

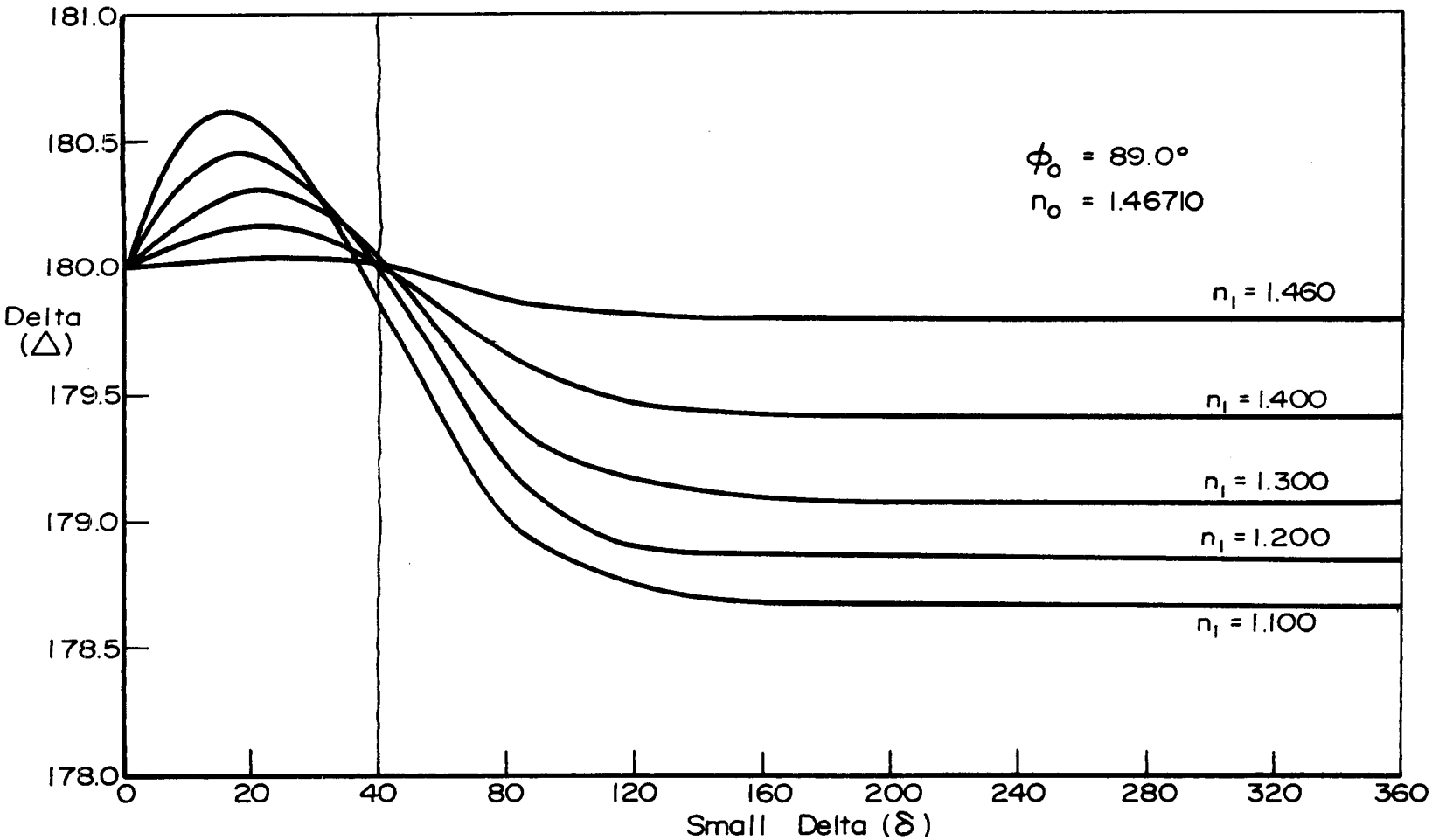
181.0
180.5
180.0
179.5
179.0
178.5
178.0
Delta
(Δ)
ϕ_0 = 89.0°
n_0 = 1.46710
n_1 = 1.460
n_1 = 1.400
n_1 = 1.300
n_1 = 1.200
n_1 = 1.100
0
20
40
80
120
160
200
240
280
320
360
Small Delta (δ)

Figure 7

clusions to be drawn from a study of these figures are: (i) the overall sensitivity in this technique is poor compared to that when the angle of incidence ϕ_o is less than the critical angle ϕ_c. (ii) All the change in Δ takes place for δ less than 80°. For larger values of δ, in other words for larger thickness of the films, there is almost no change in Δ. This is as it should be, because in the phenomenon of total internal reflection the disturbance which penetrates the film decays exponentially and hence increasing the film thickness beyond a certain value will have no effect. (iii) A comparison of Figs. 5 and 6 reveals a decrease in sensitivity with increasing critical angle. (iv) As the angle of incidence is increased from the critical angle the sensitivity increases initially, and then starts to decrease . This is seen in Fig. 5.

The final conclusion from these studies is that it is not advantageous to work with angles of incidence greater than the critical angle. On the other hand the most advantageous technique would be to use a liquid medium of fairly high refractive index and work at an angle of incidence slightly less than the critical angle.

The above results form the subject matter of a paper that will be presented at the American Physical Society meeting at Chicago, Ill. in March 1967.

5. CONCLUSIONS

The rate of oxidation in air of freshly cleaved silicon, after the initial take up region, can be expressed by the Elovich equation. Further experiments are necessary before one can formulate the rate of oxidation in the initial stages. It is definitely more advantageous to carry out the ellipsometer measurements on the kinetics of oxidation, with a liquid as the first medium and working at an angle of incidence slightly less than the critical angle.

6. PERSONNEL

Besides the Principal Investigator, K. Vedam, Associate Professor of Solid State Science, the following persons have been working on this project.

Dr. V. Prosser: Senior Research Associate, 1/4 time till September 30, 1966

Dr. F. Lukes: Senior Research Associate, since October 1, 1966 Dr. Lukes has been a colleague and collaborator of the late Professor A. Vasicek, possibly the greatest authority on ellipsometry. His arrival here has certainly provided a great impetus to this project.

Mr. R. Rai: Graduate Assistant, 1/2 time

Mr. J. Labenski: Technician - 1/2 time

Dr. R.Srinivasan: Senior Research Associate, even though not supported by this agency has continued his unstinting help and assistance in the theoretical aspects of this project.