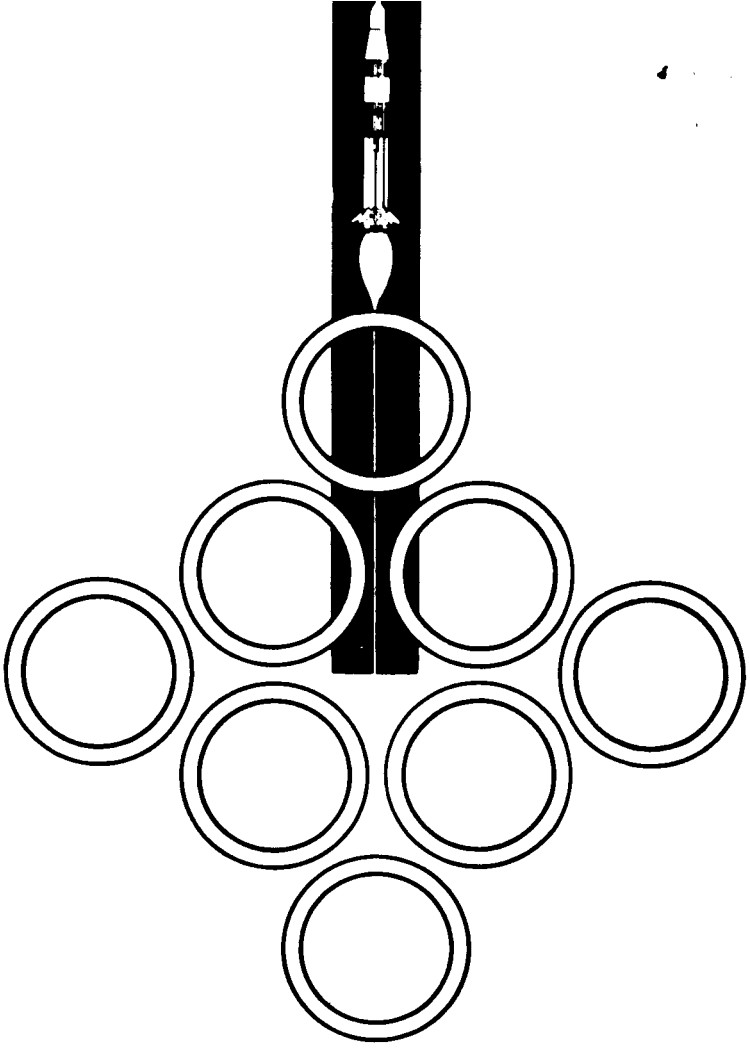

ENGINEERING DEPARTMENT

TECHNICAL REPORT

TR-RE-CCSD-FO-1088-3

January 31, 1967

SATURN IB PROGRAM

TEST REPORT FOR

PRESSURE GAUGE, 6-INCH, 0-TO 1500-PSIG

U. S. Gauge Company Part Number 1838

NASA Drawing Number 75M09618 PPG-3

FACILITY FORM 602

N67-26012 (ACCESSION NUMBER)

(THRU)

47 (PAGES)

5 (CODE)

CR-83986 (NASA CR OR TMX OR AD NUMBER)

14 (CATEGORY)

SPACE DIVISION CHRYSLER CORPORATION

TR-RE-CCSD-FO-1088-3

TEST REPORT
FOR
PRESSURE GAUGE, 6-INCH, 0- TO 1500-PSIG

U. S. Gauge Company Part Number 1838

NASA Drawing Number 75M09618 PPG-3

ABSTRACT

This report presents the results of tests performed on one specimen of Pressure Gauge 75M09618 PPG-3. The following tests were performed:

1. Receiving Inspection
2. Functional
3. Surge
4. Cycle
5. Burst

The specimen performance was in accordance with the specification requirements of NASA Specification 75M09618 PPG-3 throughout the test program.

TR-RE-CCSD-FO-1088-3

TEST REPORT

FOR

PRESSURE GAUGE, 6-INCH, 0- TO 1500-PSIG

U. S. Gauge Company Part Number 1838

NASA Drawing Number 75M09618 PPG-3

January 31, 1967

CHRYSLER CORPORATION SPACE DIVISION - NEW ORLEANS, LOUISIANA

3194-2-22-67

FOREWORD

The tests reported herein were conducted for the John F. Kennedy Space Center by Chrysler Corporation Space Division (CCSD), New Orleans, Louisiana. This document was prepared by CCSD under contract NAS 8-4016, Part VII, CWO 271620.

TABLE OF CONTENTS

Section		Page
I	INTRODUCTION	1-1
II	RECEIVING INSPECTION	2-1
III	FUNCTIONAL TEST	3-1
IV	SURGE TEST	4-1
V	CYCLE TEST	5-1
VI	BURST TEST	6-1

LIST OF ILLUSTRATIONS

Figure		Page
FRONTISPIECE	. . . . .	vi
3-1	FUNCTIONAL TEST SCHEMATIC	3-3
3-2	FUNCTIONAL TEST SETUP	3-4
4-1	SURGE TEST AND CYCLE TEST SCHEMATIC	4-5
4-2	SURGE TEST AND CYCLE TEST SETUP	4-6
4-3	TYPICAL PRESSURE SURGE	4-7
5-1	TYPICAL PRESSURE CYCLE WAVEFORM	5-13
6-1	BURST TEST SCHEMATIC	6-3
6-2	BURST TEST SETUP	6-4
6-3	EXTERNAL VIEW OF SPECIMEN AFTER BURST TEST	6-5
6-4	INTERNAL VIEW OF SPECIMEN AFTER BURST TEST	6-6

LIST OF TABLES

Table		Page
2-1	SPECIMEN NOMENCLATURE AND SIZE	2-2
3-1	FUNCTIONAL TEST EQUIPMENT LIST	3-3
3-2	INITIAL FUNCTIONAL TEST DATA	3-5
4-1	SURGE TEST AND CYCLE TEST EQUIPMENT LIST	4-3
4-2	FUNCTIONAL TEST DATA AFTER SURGE TEST	4-4
5-1	FUNCTIONAL TEST DATA AFTER 500 CYCLES	5-3
5-2	FUNCTIONAL TEST DATA AFTER 1000 CYCLES	5-4
5-3	FUNCTIONAL TEST DATA AFTER 5000 CYCLES	5-5
5-4	FUNCTIONAL TEST DATA AFTER 10,000 CYCLES	5-6

LIST OF TABLES (CONTINUED)

Table		Page
5-5	FUNCTIONAL TEST DATA AFTER 15,000 CYCLES	5-7
5-6	FUNCTIONAL TEST DATA AFTER 20,000 CYCLES	5-8
5-7	FUNCTIONAL TEST DATA AFTER 25,000 CYCLES	5-9
5-8	FUNCTIONAL TEST DATA AFTER 30,000 CYCLES	5-10
5-9	FUNCTIONAL TEST DATA AFTER 35,000 CYCLES	5-11
5-10	FUNCTIONAL TEST DATA AFTER 40,000 CYCLES	5-12
6-1	BURST TEST EQUIPMENT LIST	6-2
6-2	BURST TEST DATA	6-6

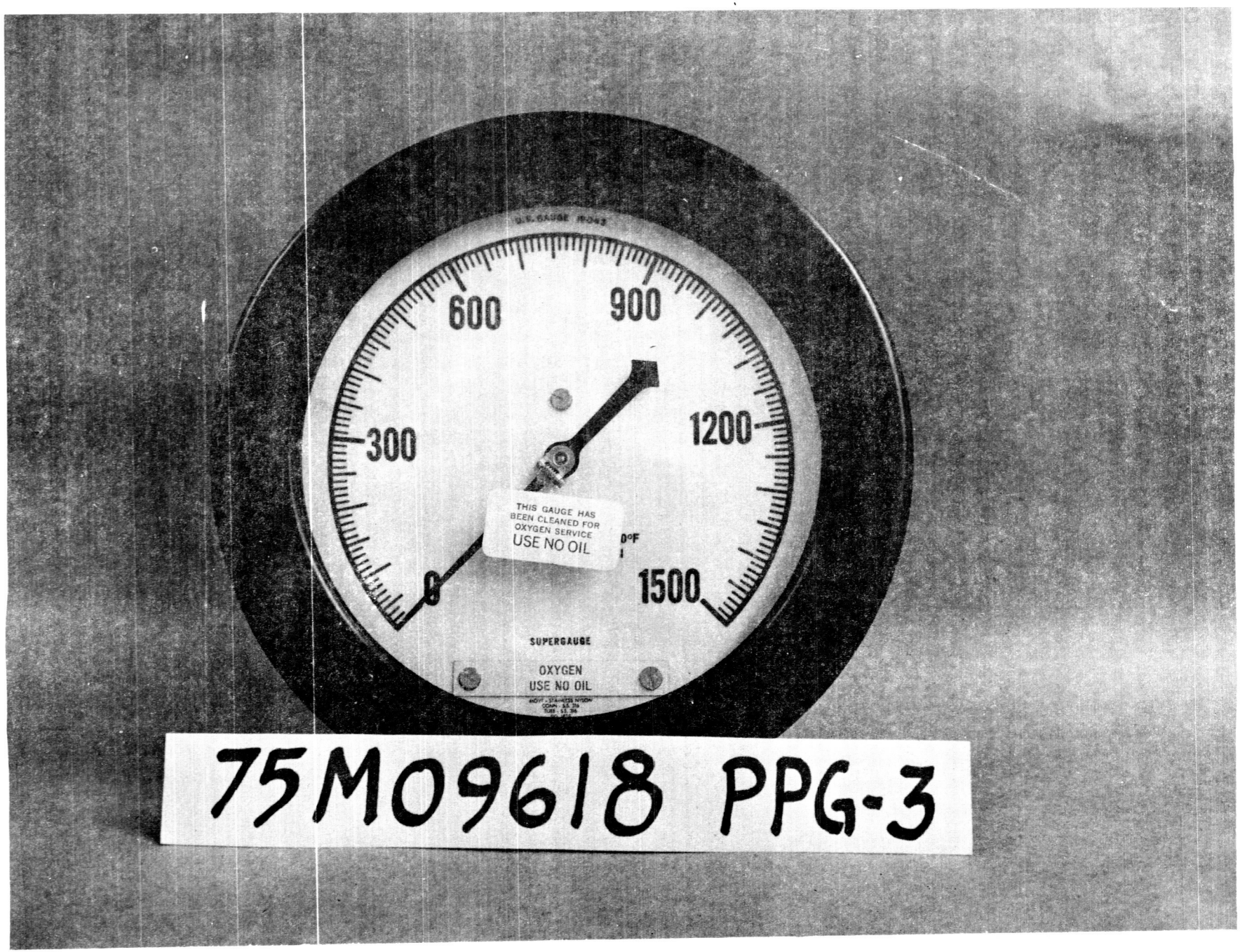

Pressure Gauge, 6-Inch, 0- To 1500-PSIG

CHECK SHEET

FOR

PRESSURE GAUGE, 6-INCH, 0- TO 1500-PSIG

MANUFACTURER: U. S. Gauge Company
MANUFACTURER'S PART NUMBER: 1838
NASA DRAWING NUMBER: 75M09618 PPG-3
TESTING AGENCY: Chrysler Corporation Space Division, New Orleans, Louisiana
AUTHORIZING AGENCY: NASA KSC

I. FUNCTIONAL REQUIREMENTS

A.	OPERATING MEDIUM:	He or GN_2
B.	OPERATING RANGE:	0 to 1500 psig
C.	ACCURACY:	1 per cent of full scale for middle (working) half of scale and 1.5 per cent of full scale for the remainder.

II. CONSTRUCTION

A.	MATERIAL:	Case - aluminum Bourdon Tube - 316 SST Meter Movement -316 SST and nylon Dial Cover - nonshatterable glass Socket and Connection - stainless steel Ring - steel Dial - steel
B.	GAUGE SIZE:	6 inches
C.	CONNECTION:	$\frac{1}{4}$-inch male NPT
D.	GAUGE MOUNTING:	Front flange mounting

III. ENVIRONMENTAL CHARACTERISTICS

A.	TEMPERATURE RANGE:	-20°F to +140°F

IV. LOCATION AND USE: The gauge is used at Launch Complex 34 in the pneumatic distribution portion of the propellant consoles.

TEST SUMMARY

PRESSURE GAUGE, 6-INCH, 0- TO 1500-PSIG

75M09618 PPG-3

Environment	Units	Operational Boundary	Test Objective	Test Results	Remarks
Receiving Inspection	1	Comply with NASA drawing 75M09618 PPG-3	Determine compliance with NASA and vendor drawings and examine for poor workmanship and defects	Satisfactory	
Functional Test	1	1% of full scale indication for middle half of scale: 1.5% for remainder of scale	Check specimen against laboratory gauge for accuracy	Satisfactory	
Surge Test	1	0- to 1000-psig within 100 milliseconds. 20 cycles	Determine if cyclic pressure surges will cause degradation or deformation	Satisfactory	
Cycle Test	1	0- to 1500 to 0 psig within 6 to 10 seconds. 40,000 cycles	Determine if cycling will cause degradation or deformation	Satisfactory	Pressure cycle was within 11.0 seconds
Burst Test	1	3000 psig for 5 minutes	Determine if abnormally high pressure will cause leakage or structural damage	Satisfactory	Specimen indicated 1600 psi after pressure was released.

SECTION I

INTRODUCTION

1.1 SCOPE

This report presents the results of tests that were performed to determine if the 0- to 1500-psig pressure gauge 75M09618 PPG-3 meets the operational and environmental requirements of Launch Complex 34, John F. Kennedy Space Center. A summary of the test results is presented on page viii.

1.2 ITEM DESCRIPTION

1.2.1 One specimen of pressure gauge 75M09618 PPG-3 was tested. The gauge is used in the pneumatic distribution portion of the propellant consoles.

1.2.2 Pressure gauge 75M09618 PPG-3 is manufactured by U. S. Gauge Company as vendor part number 1838. The pressure gauge size is 6 inches, and the scale range is 0 to 1500 psig. The gauge is designed to indicate pressure with an accuracy of 1.0 per cent of full scale for the middle half of the scale and 1.5 per cent of full scale for the remainder.

1.3 APPLICABLE DOCUMENTS

1.3.1 The following documents contain the test requirements for pressure gauge 75M09618 PPG-3:

a. KSC-STD-164(D), Standard Environmental Test Methods for Ground Support Equipment Installations at Cape Kennedy

b. NASA Drawing 75M09618 PPG-3

c. Test Plan CCSD-FO-1088-1F

d. **Test Procedure TP-RE-CCSD-FO-1088-2F**

SECTION II

RECEIVING INSPECTION

2.1 TEST REQUIREMENTS

2.1.1 The test specimen shall be visually and dimensionally inspected for conformance with the applicable specifications prior to testing.

2.2 TEST PROCEDURE

2.2.1 A visual and dimensional inspection of the specimen was performed to determine compliance with NASA drawing 75M09618 PPG-3 and the applicable vendor drawing to the extent possible without disassembly of the test specimen. At the same time, the test specimen was also inspected for poor workmanship and manufacturing defects.

2.3 TEST RESULTS

2.3.1 The specimen complied with NASA drawing 75M09618 PPG-3. No evidence of poor workmanship or manufacturing defects was observed.

2.4 TEST DATA

The data presented in table 2-1 were recorded during the inspection.

Table 2-1. Specimen Nomenclature and Size

Name	Pressure Gauge
Manufacturer	U. S. Gauge Co.
Model Number	1838
Pressure Range	0-to 1500-psig
Dial Size	6 inches
Mounting Flange Dia.	7-3/4 inches
Fitting Size	1/4-inch male NPT

SECTION III

FUNCTIONAL TEST

3.1 TEST REQUIREMENTS

3.1.1 The test specimen shall be subjected to an initial functional test consisting of 10 cycles from zero to 1500 psig, using He or GN_2 as the test medium.

3.1.2 The test specimen shall be subjected to five cycles from zero to 1500 psig in all subsequent functional tests.

3.1.3 Pressure readings shall be taken in 100-psig increments and monitored. The accuracy of these readings shall be verified abainst a laboratory gauge.

3.2 TEST PROCEDURE

3.2.1 The test setup was assembled as shown in figure 3-1, using the equipment listed in table 3-1. It was determined that all connections were tight, all gauges were installed and were operating properly, and all valves were closed.

3.2.2 Hand valve 4 was opened and pressure regulator 5 was adjusted until 1500 psig was indicated on laboratory gauge 6.

3.2.3 Vent valve 8 was opened and pressure regulator 7 was adjusted until a flow was established to purge the system of air.

3.2.4 Pressure regulator 7 was adjusted until zero psig was indicated on laboratory gauge 2. The pressure indication of test specimen 1 was recorded. Vent valve 8 was then closed.

3.2.5 Using pressure regulator 7, the pressure was increased to 100 psig as indicated on the test specimen. The pressure indication of laboratory gauge 2 was recorded.

3.2.6 The procedure described in 3.2.5 was repeated, taking pressure readings on the test specimen in 100-psig increments until a pressure of 1500 psig was reached.

3.2.7 Using pressure regulator 7 and vant valve 8, the pressure was decreased 100 psig and the pressure indicated on laboratory gauge 2 was recorded.

3.2.9 The procedures described in 3.2.5 through 3.2.8 were repeated for a total of ten cycles during the initial functional test, and five cycles during all subsequent functional tests.

3.3 TEST RESULTS

The test specimen demonstrated satisfactory accuracy, operation and resolution during the initial functional test. The test specimen indication was exact at zero, and a maximum of 1.5 per cent of full scale deviation was evident from 100 psi through 1500 psi.

3.4 TEST DATA

The data presented in table 3-2 were recorded during the test.

Table 3-1. Functional Test Equipment List

Item No.	Item	Manufacturer	Model/ Part No.	Serial No.	Remarks
1	Test Specimen	U. S. Gauge Co.	1838	75M09618 PPG-3	0-to 1500-psig 1.5% FS accuracy
2	Laboratory Gauge	Oxweld	NA	NA	0-to 3500-psig
3	GN_2 Supply	NA	NA	NA	3000-psig
4	Hand Valve	Air Products	NA	NA	GN_2 Supply
5	Pressure Regulator	Oxweld	NA	NA	3000-psig inlet 0-to 3000 psig outlet
6	Laboratory Gauge	Heise	NA	95-1569-B	0-to 1500-psig 0.5% FS accuracy Cal. date 10/13/66
7	Pressure Regulator	Grove	15KX	NA	6000-psig inlet 0-to 3500-psig outlet
8	Vent Valve	Robbins	SSKG-250 -4T	NA	$\frac{1}{4}$-inch

Table 3-2. Initial Functional Test Data

Specimen Indication (psi)	Laboratory Gauge Indication (psi)									
	1	2	3	4	5	6	7	8	9	10
0	0	0	0	0	0	0	0	0	0	0
100	94	95	96	94	96	96	93	93	92	94
200	197	198	197	195	196	196	198	195	199	197
300	301	300	299	299	300	300	301	300	299	300
400	400	400	401	399	400	400	399	401	401	403
500	501	502	501	501	500	501	502	501	502	502
600	605	603	603	603	600	602	603	602	602	603
700	706	704	703	702	702	701	702	703	703	704
800	803	803	802	802	802	803	802	802	803	802
900	907	907	905	904	904	904	906	906	904	902
1000	1001	1001	1001	1001	1000	1000	1001	1000	1000	1000
1100	1105	1104	1104	1103	1102	1103	1103	1106	1103	1102
1200	1205	1207	1204	1205	1202	1204	1204	1204	1204	1204
1300	1304	1306	1306	1305	1306	1306	1305	1306	1305	1305
1400	1406	1406	1405	1406	1405	1405	1406	1406	1406	1406
1500	1505	1503	1502	1500	1502	1500	1500	1501	1500	1501
1400	1406	1406	1405	1406	1405	1405	1406	1406	1405	1406
1300	1306	1305	1305	1306	1306	1306	1305	1306	1306	1305
1200	1206	1207	1204	1204	1202	1205	1205	1205	1204	1203
1100	1104	1103	1103	1103	1102	1103	1103	1104	1103	1103
1000	1002	1002	1001	1000	1000	1001	1000	1001	1001	1001
900	906	905	904	904	904	905	906	905	906	904
800	803	803	802	802	802	801	801	802	803	804
700	703	703	702	704	704	703	704	702	704	704
600	603	603	602	602	602	602	602	602	602	603
500	501	501	502	502	503	503	503	502	504	503
400	401	401	403	403	402	402	402	401	402	403
300	301	301	300	298	298	300	300	300	302	301
200	199	199	200	200	200	199	197	196	197	198
100	97	98	96	97	96	96	96	92	96	96
0	0	0	0	0	0	0	0	0	0	0

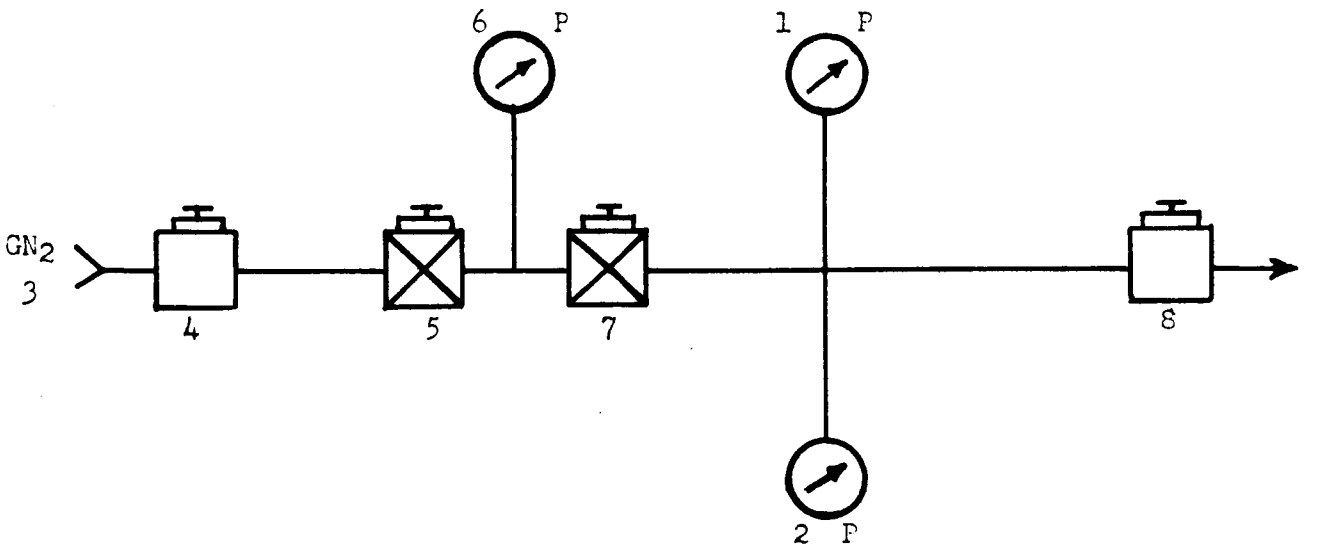

Figure 3-1. Functional Test Schematic

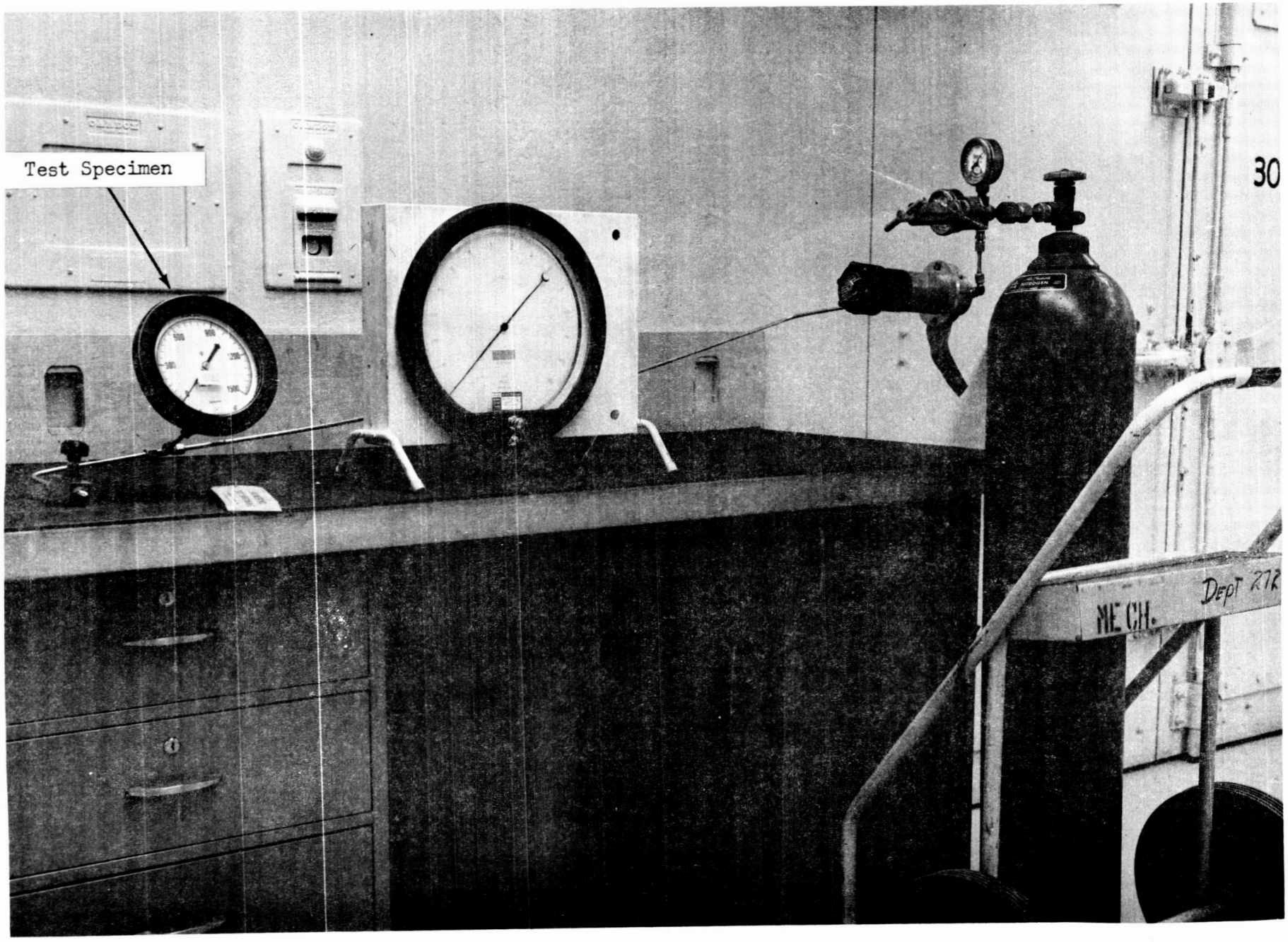

Figure 3-2. Functional Test Setup

SECTION IV

SURGE TEST

4.1 TEST REQUIREMENTS

4.1.1 A surge test shall be performed on the test specimen to determine whether cyclic pressure surges cause degradation or deformation.

4.1.2 The surge test shall consist of pressurizing the specimen from 0 to 1000 psig within 100 milliseconds, using He or GN_2.

4.1.3 Twenty cycles shall be performed.

4.2 TEST PROCEDURE

4.2.1 The surge test setup was assembled as shown in figure 4-1, using the equipment listed in table 4-1. It was ensured that all connections were tight, gauges were installed and were operating properly, and all valves were closed.

4.2.2 Vent valve 14 was opened; then hand valve 12 was opened.

4.2.3 Pressure regulator 8 was adjusted until 1000 psig was indicated on pressure gauge 6.

4.2.4 Solenoid valve 7 was actuated, hand valve 4 was opened and flow regulator 5 was adjusted until a flow was established to purge the system of air. Vent valve 14 was closed when the system was purged.

4.2.5 Solenoid valve 7 was cycled and flow regulator 5 was adjusted until a pressure rise from zero to 1000 psig within 100 milliseconds was established.

4.2.6 After the surge cycle had been established, the test specimen 1 was subjected to 20 cycles as indicated by counter 10. The cycles were monitored on oscillograph recorder 2.

4.2.7 A functional test was performed on test specimen 1 and the data was recorded.

4.3 TEST RESULTS

4.3.1 The test specimen did not leak. There was no deformation or degradation of performance.

4.4 TEST DATA

4.4.1 The data presented in table 4-2 were recorded after the test. Figure 4-3 presents a typical surge pressure cycle.

Table 4-1. Surge Test and Cycle Test Equipment List

Item No.	Item	Manufacturer	Model/ Part No.	Serial No.	Remarks
1	Test Specimen	U. S. Gauge Co.	1838	75M09618 PPG-3	0-to 1500-psig 1.5% FS accuracy
2	Oscillograph Recorder	Consolidated Electrodynamics	NA	017-887	NA
3	Pressure Transducer	CEC	4-350-0001	3145	0-to 3000-psig $\pm\frac{1}{4}$% FS accuracy Cal. date 10/1/66
4	Hand Valve	Robbins	SSKG-250-4T	NA	$\frac{1}{4}$-inch
5	Flow Regulator	Watts	M	119-3	$\frac{1}{4}$-inch
6	Pressure Gauge	Heise	NA	95-1569 -B	0-to 3000 psig 0.5% FS accuracy Cal. date 10/13/66
7	Solenoid Valve	Marotta	MV-74	17216	3-way
8	Pressure Regulator	Grove	NA	104921	3000-psig inlet 1000-psig outlet
9	Cycle Timer	Cramer Control	523	Y2389A	NA
10	Counter	General Control	NA	NA	NA
11	Filter	Bendix Corp.	2-S-134 60B-0	60	2-micron absolute
12	Hand Valve	Robbins	SSKG 250 -4T	NA	1-$\frac{1}{2}$-inch
13	He or GN_2 Supply	NA	NA	NA	3000-psig
14	Vent Valve	Robbins	SSKG 250 -4T	NA	$\frac{1}{4}$-inch

Table 4-2. Functional Test Data After Surge

Specimen Indication (psi)	Laboratory Gauge Indication (psi)				
	1	2	3	4	5
0	0	0	0	0	0
100	092	094	092	94	94
200	196	197	198	198	197
300	298	300	300	300	303
400	400	402	402	402	401
500	502	504	503	503	501
600	604	603	603	603	601
700	704	705	704	704	702
800	803	802	803	803	802
900	904	904	905	904	903
1000	1000	1000	1000	1000	998
1100	1105	1102	1105	1106	1103
1200	1202	1204	1203	1206	1204
1300	1307	1305	1303	1307	1305
1400	1403	1405	1404	1406	1406
1500	1500	1500	1500	1500	1500
1400	1404	1406	1406	1403	1406
1300	1306	1305	1307	1307	1305
1200	1205	1205	1205	1205	1207
1100	1103	1104	1104	1102	1104
1000	1000	1000	1000	1000	1000
900	904	904	904	902	904
800	803	802	802	803	802
700	704	703	704	703	700
600	605	603	603	600	602
500	504	503	502	501	501
400	402	402	402	399	398
300	302	300	302	302	299
200	198	199	200	196	196
100	93	93	93	92	74
0	0	0	0	0	0

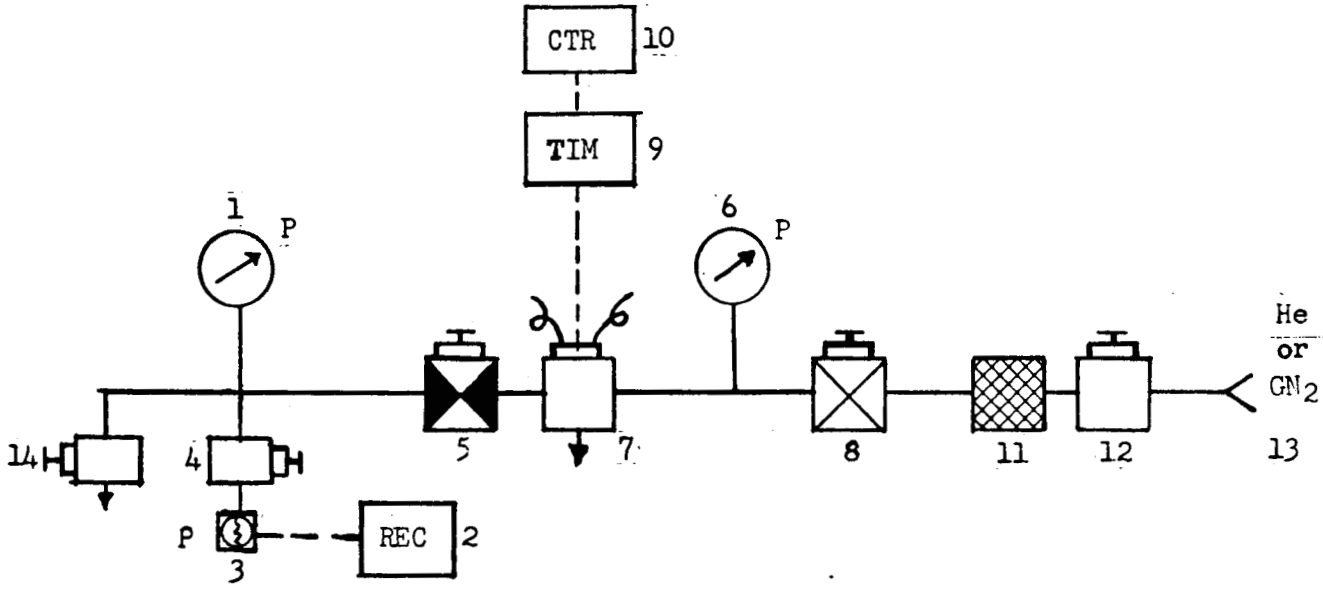

Note: All lines 1/4-inch.
Refer to table 4-1 for item identification.
Electrical connection shown broken line (- - -).

Figure 4-1. Surge Test and Cycle Test Schematic

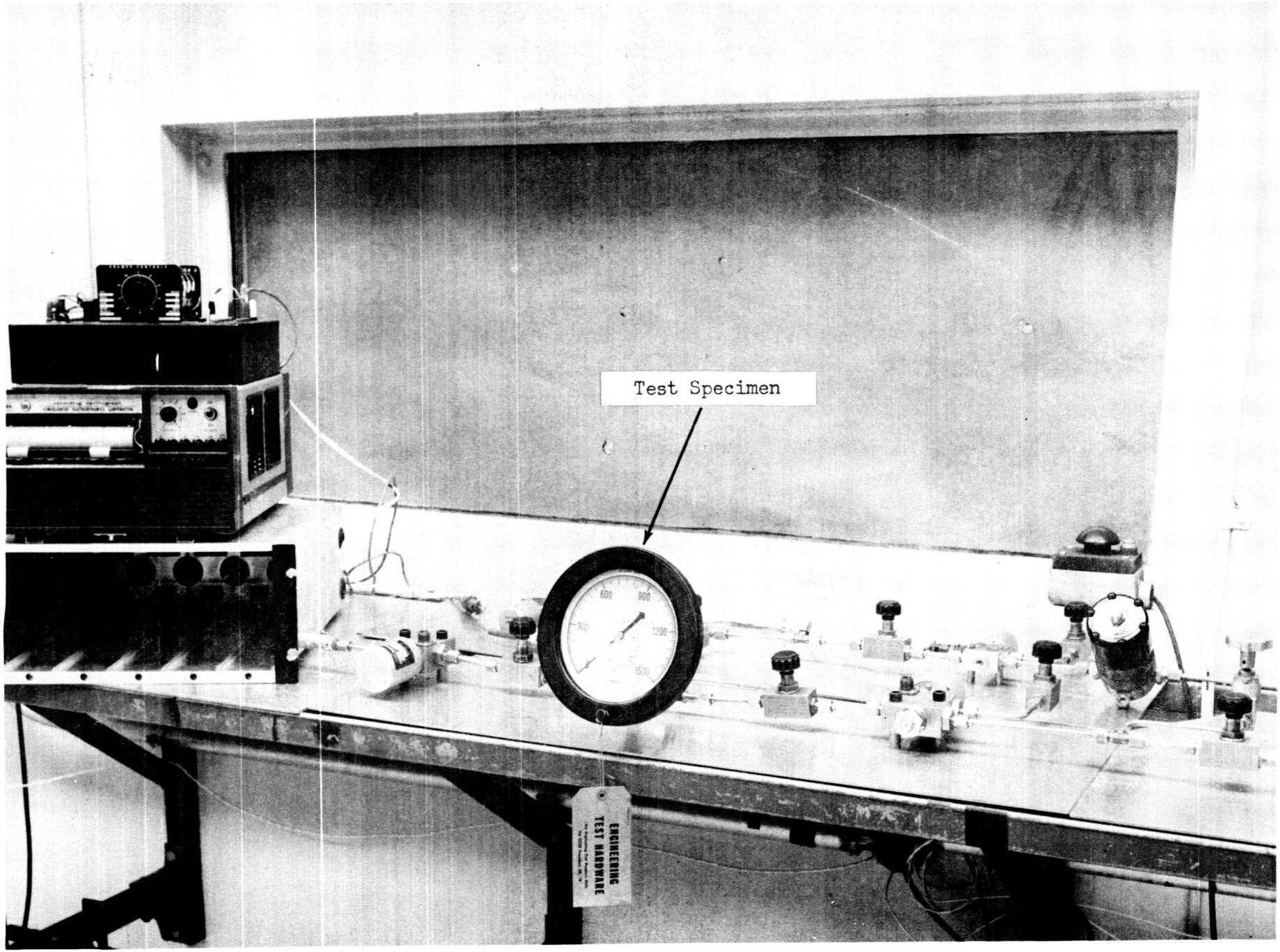

Figure 4-2. Surge Test and Cycle Test Setup

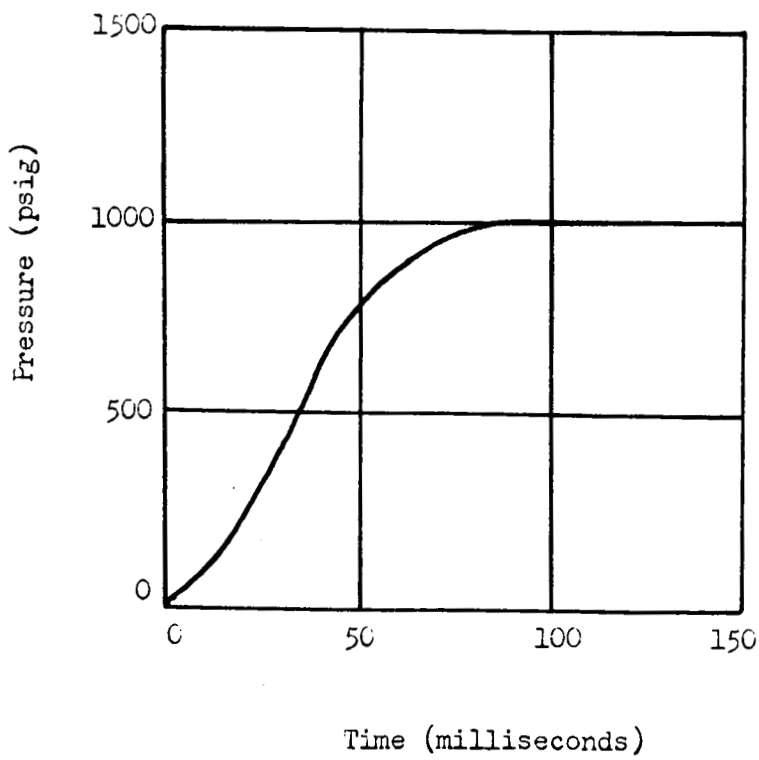

Figure 4-3. Typical Pressure Surge

SECTION V

CYCLE TEST

5.1 TEST REQUIREMENTS

5.1.1 A cycle test shall be performed on the test specimen to determine whether continued cycling cuases degradation or deformation.

5.1.2 One cycle shall consist of pressurizing the test specimen from zero to 1500 psig and back to zero in 6 to 10 seconds.

5.1.3 Conduct 40,000 cycles and perform functional tests after 500, 1000 and 5000 cycles, and every 5000 cycles thereafter.

5.2 TEST PROCEDURE

5.2.1 The cycle test setup was assembled as shown in figure 4-1, using the equipment listed in the table 4-1. It was determined that all connections were tight, gauges were installed and were operating properly, and all valves were closed.

5.2.2 Vent valve 14 was opened; then hand valve 12 was opened.

5.2.3 Pressure regulator 8 was adjusted until 1500 psig was indicated on gauge 6.

5.2.4 Solenoid valve 7 was actuated, hand valve 4 was opened, and flow regulator 5 was adjusted until a flow was established to purge the system of air. Vent valve 14 was then closed.

5.2.5 Solenoid valve 7 was cycled and flow regulator 5 adjusted until a pressure rise from zero to 1500 psig and back to zero within 11 seconds was established.

5.2.6 After the cycle had been established, test specimen 1 was subjected to 40,000 cycles as indicated by counter 10. Pressure rise and decay time was periodically checked on oscillograph recorder 2.

5.2.7 A functional test was performed on test specimen 1 after 500, 1000 and 5000 cycles, and every 5000 cycles thereafter.

5.3 TEST RESULTS

5.3.1 The test specimen did not leak. There was no deformation or degradation of performance.

5.4 TEST DATA

5.4.1 The data is presented in tables 5-1 through 5-10. A typical pressure cycle is presented in figure 5-1.

Table 5-1. Functional Test Data After 500 Cycles

Specimen Indication (psi)	Laboratory Gauge Indication (psi)				
	1	2	3	4	5
0	0	0	0	0	0
100	86.5	90.5	92	90	91
200	194	195	195.3	196	194
300	294	297	298	298	297
400	394	398	397	377	400
500	499	499	500	499	500
600	599	599	600	599	599
700	699	700	700	700	701
800	798	800	800	798	800
900	900	900	900	899	900
1000	996	987	998	996	997
1100	1098	1100	1098.5	1100	1100
1200	1195	1201	1200	1198	1198
1300	1298	1298	1301	1299	1298
1400	1396	1400	1396	1398	1399
1500	1496	1497	1498	1498	1498
1400	1399	1398	1399	1400	1400
1300	1300	1300	1302	1299	1300
1200	1198	1200	1198	1200	1201
1100	1098.5	1100	1098	1100	1100
1000	996	997	996	998	997
900	898	900	900	898	900
800	795	799	800	799	798
700	698	700	700	700	700
600	598.5	600	600	600	599
500	499	500	499	500	500
400	397	398	398	398	398
300	298	297	297	298	297
200	196	193	194	194	194
100	88	88	90	89	90
0	0	0	0	0	0

Table 5-2. Functional Test Data After 1000 Cycles

Specimen Indication (psi)	Laboratory Gauge Indication (psi)				
	1	2	3	4	5
0	0	0	0	0	0
100	90	92	90	91	92
200	196	197	196	197	197
300	301	300	300	300	300
400	401	400	402	402	400
500	502	502	503	502	502
600	603	602	602	602	602
700	704	703	703	704	703
800	802	802	802	802	802
900	903	903	904	904	904
1000	1000	1000	1000	1000	1000
1100	1103	1104	1103	1104	1103
1200	1203	1204	1204	1202	1203
1300	1303	1304	1302	1302	1303
1400	1401	1400	1400	1401	1400
1500	1500	1501	1500	1500	1500
1400	1400	1403	1402	1401	1401
1300	1302	1303	1303	1304	1303
1200	1203	1202	1202	1204	1203
1100	1103	1103	1104	1102	1100
1000	1001	1001	1000	1000	1000
900	904	904	902	904	904
800	803	802	801	800	802
700	704	703	704	704	704
600	604	601	602	602	602
500	504	502	502	502	502
400	402	400	399	400	400
300	301	300	300	300	299
200	196	196	196	196	196
100	92	91	93	91	93
0	0	0	0	0	0

Table 5-3. Functional Test Data After 5000 Cycles

Specimen Indication (psi)	Laboratory Gauge Indication (psi)				
	1	2	3	4	5
0	0	0	0	0	0
100	90	90	85	90	90
200	192	194	192	195	195
300	300	300	300	300	297
400	395	395	390	400	400
500	495	500	495	500	500
600	590	600	590	600	600
700	700	700	700	700	700
800	795	800	800	800	800
900	900	900	900	900	900
1000	1000	1000	1000	1000	1000
1100	1100	1100	1100	1100	1100
1200	1200	1200	1200	1195	1200
1300	1300	1300	1300	1300	1300
1400	1400	1400	1400	1400	1400
1500	1500	1500	1500	1500	1500
1400	1400	1400	1400	1400	1400
1300	1300	1300	1300	1300	1300
1200	1195	1200	1200	1200	1200
1100	1095	1100	1095	1100	1100
1000	1000	1000	1000	1000	1000
900	900	900	900	900	900
800	800	800	800	800	800
700	700	700	700	700	700
600	600	600	600	600	595
500	500	500	500	500	500
400	400	395	400	400	400
300	295	295	300	295	300
200	190	185	200	190	190
100	90	90	85	85	90
0	0	0	0	0	0

Table 5-4. Functional Test Data After 10,000 Cycles

Specimen Indication (psi)	Laboratory Gauge Indication (psi)				
	1	2	3	4	5
0	0	0	0	0	0
100	92	92	92	94	93
200	195	195	196	198	198
300	296	300	298	300	300
400	398	398	399	399	398
500	500	500	500	500	502
600	600	600	600	600	600
700	700	701	700	700	702
800	800	799	800	800	800
900	900	900	900	900	900
1000	997	998	998	1000	998
1100	1099	1100	1099	1099	1101
1200	1200	1197	1200	1200	1200
1300	1299	1298	1299	1298	1300
1400	1396	1396	1397	1398	1398
1500	1496	1496	1497	1498	1497
1400	1398	1396	1397	1396	1398
1300	1299	1298	1300	1300	1303
1200	1200	1200	1199	1200	1200
1100	1100	1099	1098	1102	1100
1000	998	998	998	1000	997
900	900	900	900	902	900
800	800	800	800	800	800
700	700	700	702	700	702
600	600	600	600	600	600
500	500	500	500	500	500
400	399	398	396	398	397
300	298	299	298	300	298
200	196	196	197	197	196
100	92	92	91	93	92
0	0	0	0	0	0

Table 5-5. Functional Test Data After 15,000 Cycles

Specimen Indication (psi)	Laboratory Gauge Indication (psi)				
	1	2	3	4	5
0	0	0	0	0	0
100	88	91	91	93	90
200	196	195	196	194	195
300	298	298	300	298	298
400	398	399	398	398	398
500	500	500	500	500	495
600	600	600	600	600	600
700	701	701	701	701	701
800	800	800	800	800	796
900	900	900	900	900	895
1000	997	997	997	997	998
1100	1099	1099	1100	1099	1098
1200	1200	1199	1201	1198	1196
1300	1298	1299	1298	1298	1298
1400	1399	1398	1397	1399	1398
1500	1495	1498	1496	1497	1496
1400	1398	1400	1399	1399	1396
1300	1298	1299	1300	1300	1300
1200	1200	1200	1200	1199	1198
1100	1098	1100	1099	1099	1096
1000	998	998	999	999	998
900	901	900	901	901	902
800	798	799	800	800	800
700	701	701	701	700	700
600	600	600	600	600	600
500	500	500	500	500	501
400	399	399	397	398	398
300	298	298	298	297	298
200	195	196	195	195	196
100	92	92	90	92	93
0	0	0	0	0	0

Table 5-6. Functional Test Data After 20,000 Cycles

Specimen Indication (psi)	Laboratory Gauge Indication (psi)				
	1	2	3	4	5
0	0	0	0	0	0
100	92	92	93	94	92
200	194	197	198	198	199
300	297	299	300	300	299
400	396	399	398	401	400
500	499	502	502	502	501
600	598	600	601	601	600
700	698	702	702	702	702
800	798	800	800	799	799
900	899	900	900	900	900
1000	997	998	997	998	998
1100	1099	1099	1100	1100	1100
1200	1198	1196	1199	1201	1198
1300	1296	1298	1299	1300	1298
1400	1394	1395	1395	1395	1397
1500	1494	1496	1497	1496	1495
1400	1396	1397	1397	1398	1397
1300	1298	1298	1300	1300	1299
1200	1196	1200	1198	1199	1200
1100	1098	1100	1101	1099	1100
1000	996	998	998	998	998
900	897	900	900	899	900
800	799	799	800	800	800
700	700	701	701	701	700
600	598	600	600	601	600
500	500	502	500	500	501
400	397	398	399	398	399
300	398	300	300	300	299
200	194	197	197	196	197
100	93	94	94	92	92
0	0	0	0	0	0

Table 5-7. Functional Test Data After 25,000 Cycles

Specimen Indication (psi)	Laboratory Gauge Indication (psi)				
	1	2	3	4	5
0	0	0	0	0	0
100	96	92	92	92	92
200	197	197	199	198	198
300	295	197	297	300	297
400	397	397	398	398	397
500	495	498	498	499	498
600	599	600	600	599	600
700	700	700	698	699	699
800	798	798	798	798	798
900	896	898	899	897	896
1000	996	996	997	997	996
1100	1098	1096	1094	1097	1097
1200	1199	1197	1200	1194	1196
1300	1298	1297	1300	1298	1296
1400	1397	1399	1400	1398	1398
1500	1498	1492	1498	1497	1497
1400	1396	1395	1400	1397	1394
1300	1298	1300	1298	1297	1297
1200	1198	1197	1199	1198	1198
1100	1098	1098	1097	1098	1097
1000	999	997	995	987	999
900	900	898	897	897	898
800	800	798	797	797	797
700	698	699	700	700	700
600	597	600	596	597	596
500	499	500	496	500	500
400	400	395	397	397	397
300	300	300	298	298	298
200	197	196	196	197	197
100	93	92	92	93	92
0	0	0	0	0	0

Table 5-8. Functional Test Data After 30,000 Cycles

Specimen Indication (psi)	Laboratory Gauge Indication (psi)				
	1	2	3	4	5
0	0	0	0	0	0
100	95	92	94	92	92
200	199	195	195	196	195
300	303	299	298	298	297
400	401	397	399	397	397
500	504	500	500	500	500
600	603	600	600	600	600
700	704	701	700	700	700
800	802	800	799	800	800
900	902	900	899	898	900
1000	1000	998	997	998	997
1100	1103	1099	1099	1100	1100
1200	1202	1200	1199	1198	1198
1300	1297	1298	1298	1297	1298
1400	1397	1396	1395	1395	1396
1500	1497	1498	1495	1495	1496
1400	1397	1395	1393	1395	1396
1300	1303	1297	1299	1298	1297
1200	1202	1199	1200	1198	1200
1100	1103	1100	1100	1099	1098
1000	1001	998	998	998	997
900	902	900	900	899	899
800	804	800	800	799	799
700	703	702	700	701	701
600	603	599	600	599	600
500	504	501	500	500	500
400	401	399	398	397	398
300	302	300	300	299	300
200	201	196	196	196	196
100	94	95	92	92	94
0	0	0	0	0	0

Table 5-9. Functional Test Data After 35,000 Cycles

Specimen Indication (psi)	Laboratory Gauge Indication (psi)				
	1	2	3	4	5
0	0	0	0	0	0
100	97	96	97	97	96
200	200	201	201	200	200
300	303	301	300	302	302
400	401	402	401	401	402
500	501	502	502	501	500
600	600	600	600	600	601
700	702	700	701	701	701
800	800	799	799	798	799
900	899	898	898	897	899
1000	997	994	995	995	996
1100	1097	1096	1097	1096	1096
1200	1194	1194	1195	1194	1195
1300	1294	1294	1295	1295	1295
1400	1391	1392	1392	1391	1391
1500	1492	1492	1492	1492	1492
1400	1392	1388	1390	1390	1390
1300	1295	1294	1293	1293	1292
1200	1196	1195	1194	1194	1193
1100	1098	1097	1097	1096	1097
1000	997	994	997	994	994
900	899	898	898	897	898
800	799	798	798	799	799
700	702	701	701	701	701
600	600	600	601	601	601
500	502	502	502	501	501
400	400	399	400	400	399
300	301	301	300	301	301
200	200	200	200	199	200
100	95	96	96	96	96
0	0	0	0	0	0

Table 5-10. Functional Test Data After 40,000 Cycles

Specimen Indication (psi)	Laboratory Gauge Indication (psi)				
	1	2	3	4	5
0	0	0	0	0	0
100	97	96	96	96	96
200	200	200	200	200	200
300	302	301	300	300	300
400	400	400	400	401	400
500	501	502	502	501	500
600	600	600	600	600	600
700	702	700	700	700	700
800	800	797	798	798	798
900	898	898	896	898	898
1000	996	994	995	994	996
1100	1096	1097	1095	1094	1095
1200	1194	1194	1194	1194	1195
1300	1294	1294	1294	1292	1294
1400	1390	1390	1390	1390	1390
1500	1490	1490	1490	1490	1490
1400	1392	1388	1390	1390	1390
1300	1295	1294	1292	1293	1292
1200	1196	1195	1194	1194	1193
1100	1097	1096	1096	1095	1094
1000	997	994	994	994	994
900	899	898	898	897	898
800	799	798	798	798	798
700	702	700	700	700	700
600	600	600	600	600	600
500	502	502	501	502	500
400	400	399	399	400	400
300	302	301	300	300	301
200	200	200	200	200	200
100	96	96	96	96	96
0	0	0	0	0	0

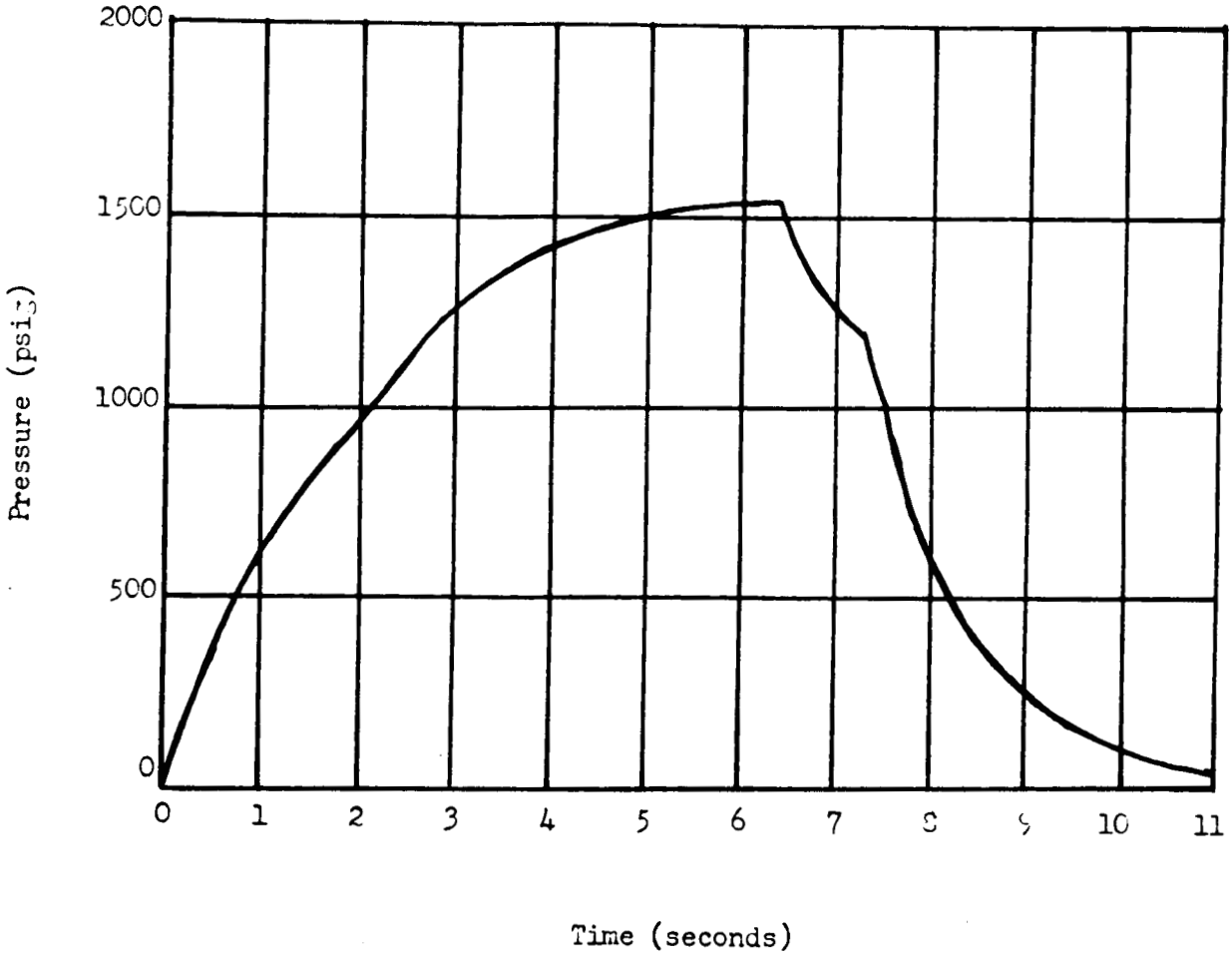

Figure 5-1. Typical Pressure Cycle Waveform

SECTION VI

BURST TEST

6.1 TEST REQUIREMENTS

6.1.1 A burst test shall be performed on the specimen to determine if abnormally high pressure will cause leakage or structural damage.

6.1.2 The test specimen shall be subjected to a water pressure of 3000 psig for 5 minutes.

6.1.3 Any leakage or structural damage to the test specimen shall be noted.

6.2 TEST PROCEDURE

6.2.1 The burst test setup was assembled as shown in figures 6-1 and 6-2 using the equipment listed in table 6-1. It was ensured that all connections were tight, gauges were installed and were operating properly, and all valves were closed.

6.2.2 Hand valves 3 and 4 were opened.

6.2.3 The system was bled, using pressure from hand pump 5, until the system was free of air.

6.2.4 Hand valve 3 was closed.

6.2.5 Using hand pump 5, the water pressure was increased to 3000 psig as indicated on laboratory gauge 2.

6.2.6 Hand valve 4 was closed.

6.2.7 The pressure was monitored for 5 minutes while checking test specimen 1 for any visible leakage or damage.

6.2.8 The pressure on hand pump 5 was released.

6.2.9 Hand valve 3 was opened to vent the system.

6.3 TEST RESULTS

The test specimen did not leak, but indicated 1600 psi after pressure was released. Figures 6-3 and 6-4 show the specimen after test.

6.4 TEST DATA

The data presented in table 6-2 were recorded during the test.

Table 6-1. Burst Test Equipment List

Item No.	Item	Manufacturer	Model/ Part No.	Serial No.	Remarks
1	Test Specimen	U. S. Gauge Co.	1838	75M09618 PPG-2	0-to 1500-psig 1.5% FS accuracy
2	Laboratory Gauge	Marsh	NA	95-12-52 -B	0-to 6000-psig 0.5% FS accuracy
3	Hand Valve	Robbins	SSKA-250 -4T	NA	$\frac{1}{4}$-inch
4	Hand Valve	Robbins	SSKA-250 -4T	NA	$\frac{1}{4}$-inch
5	Hand Pump	Pressure Products Inc.	NA	K-750	
6	Water Reservoir	NA	NA	NA	

Table 6-2. Burst Test Data

Pressure	3000 psig
Time	5 minutes
Leakage	0

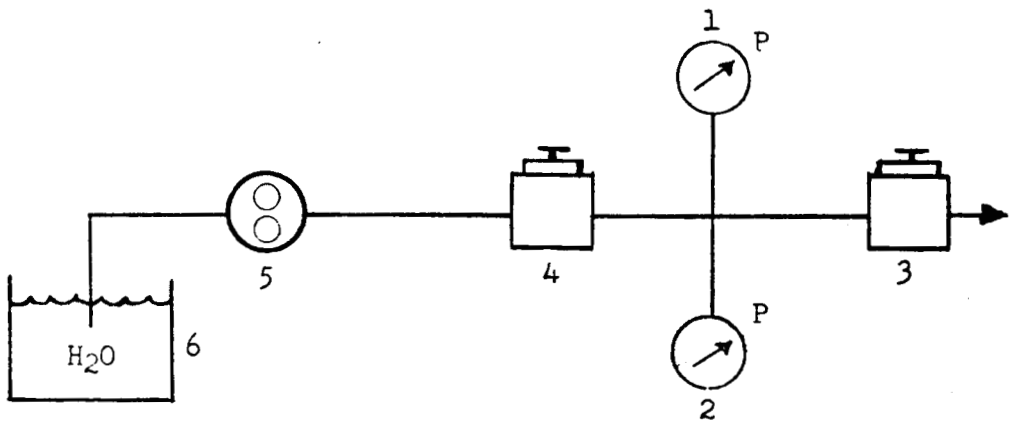

Note: All lines 1/4-inch.
Refer to table 4-1 for item identification.

Figure 6-1. Burst Test Schematic

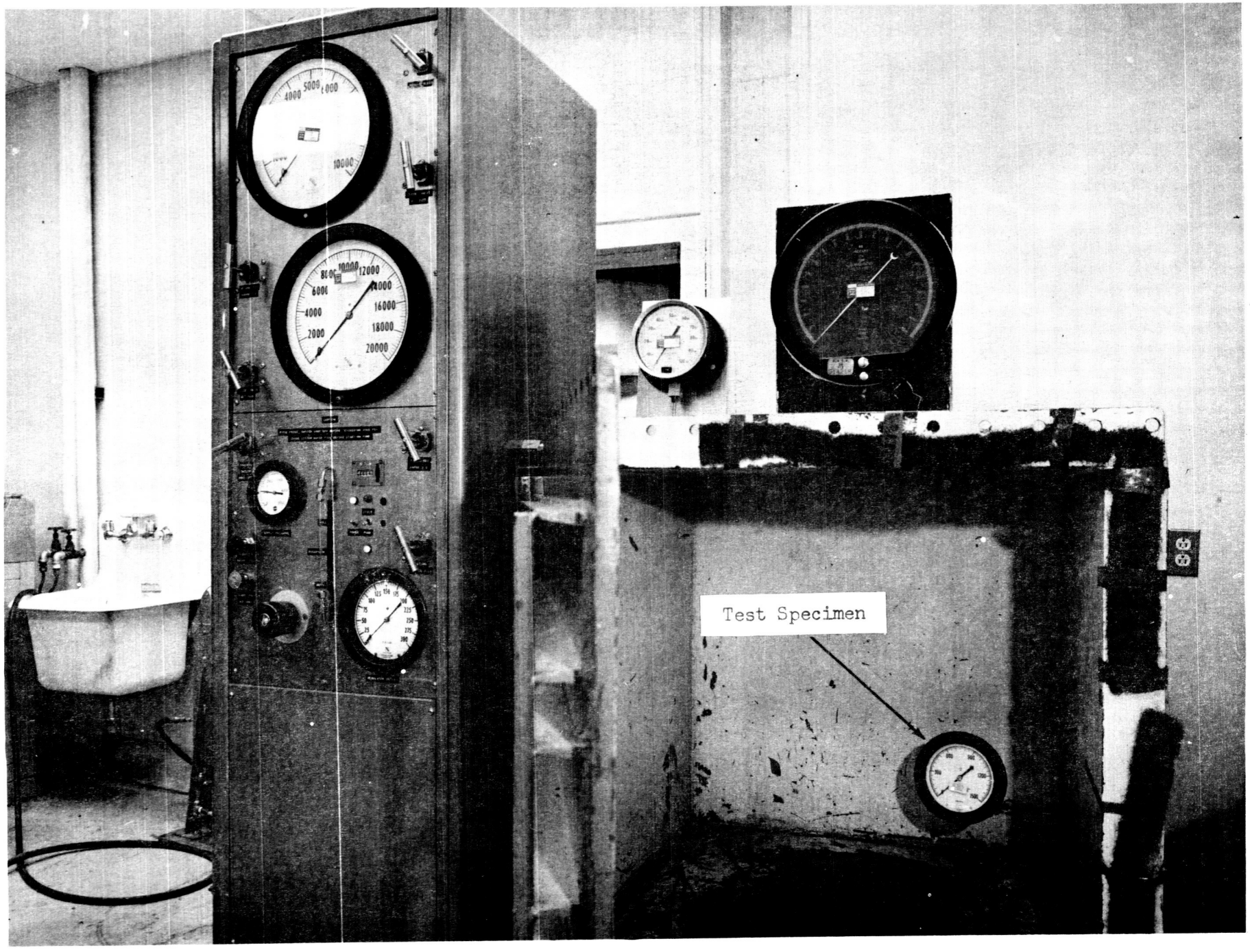

Figure 6-2. Burst Test Setup

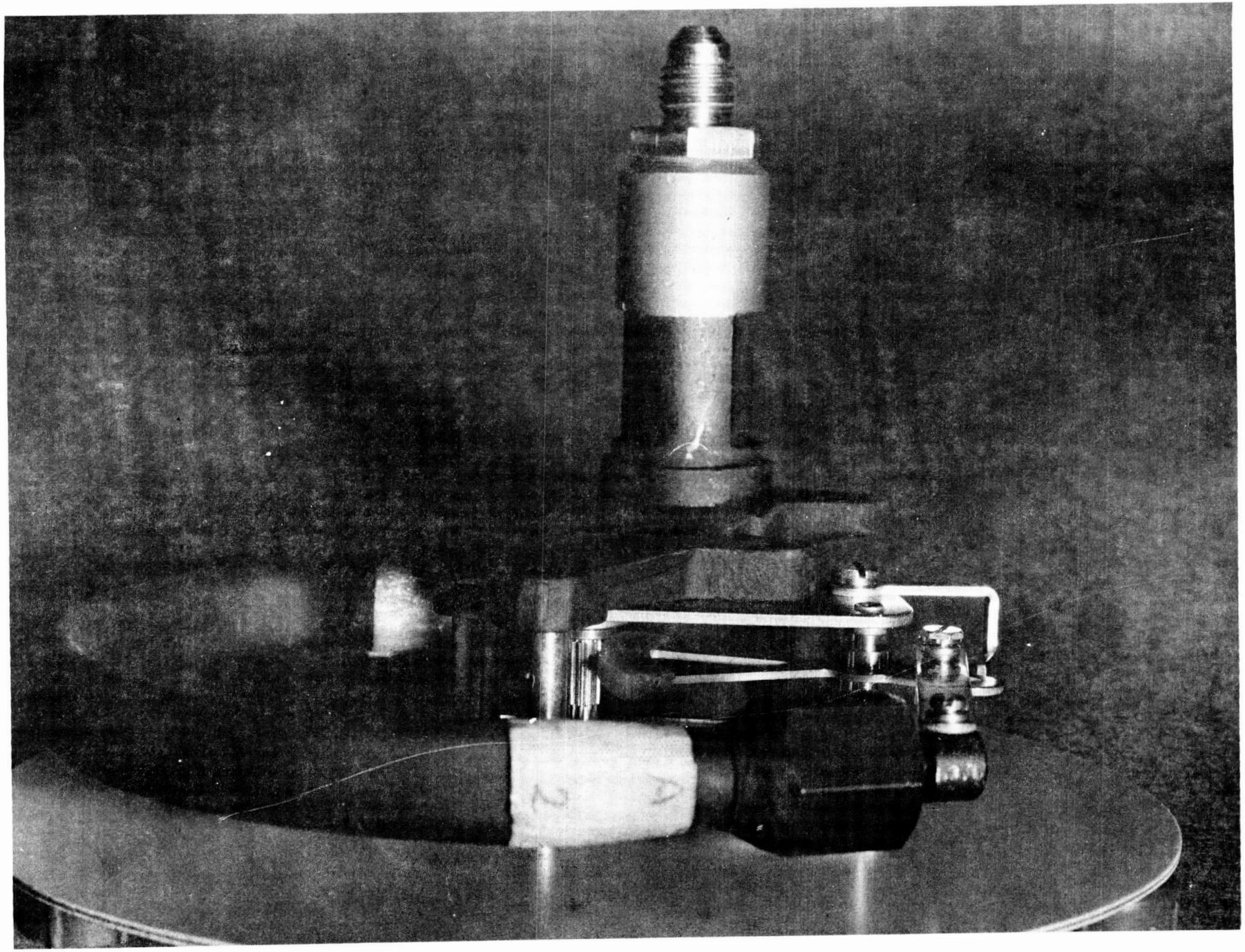

Figure 6-4. Internal View of Specimen After Burst Test

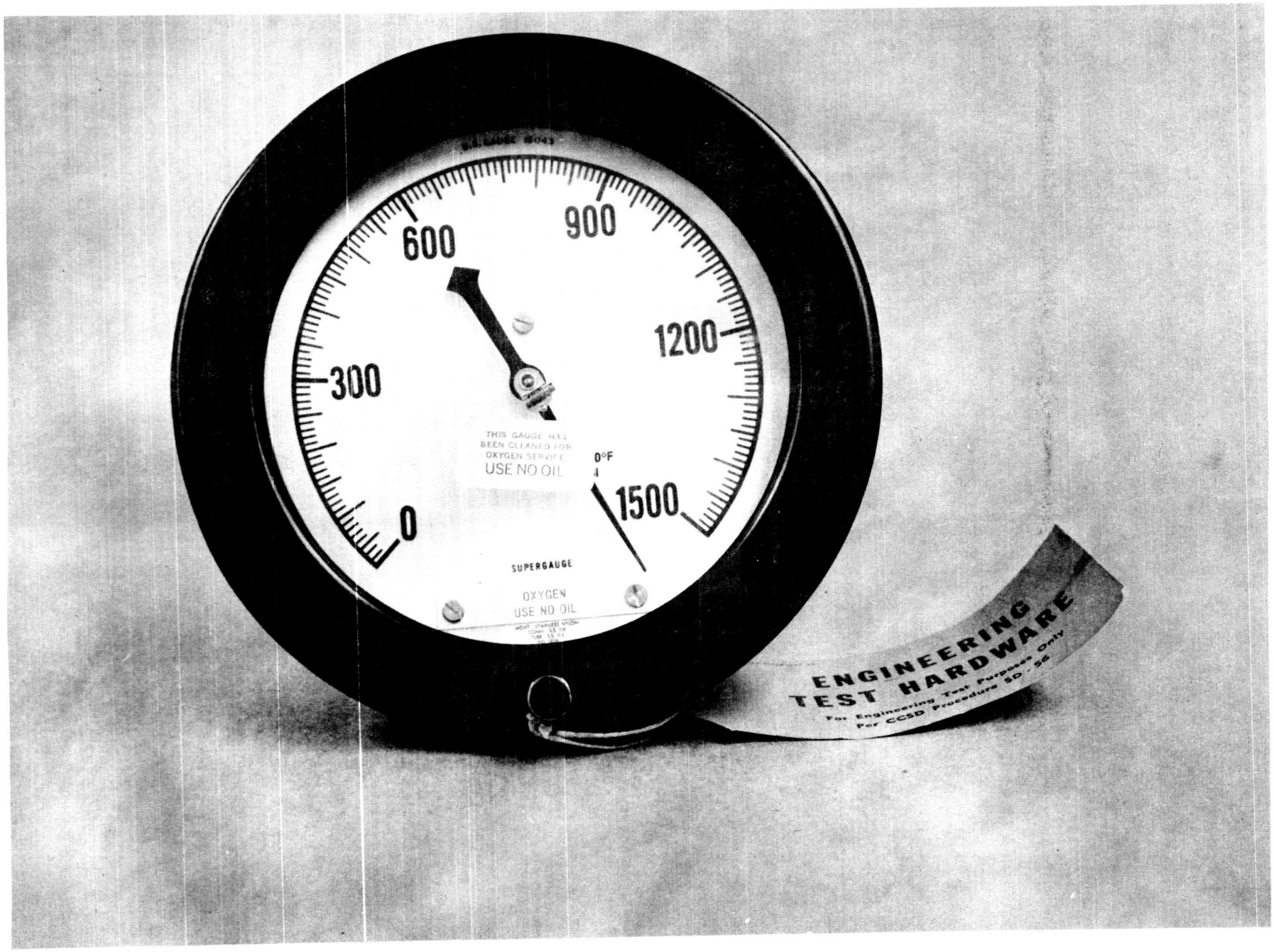

Figure 6-3. External View of Specimen After Burst Test

APPROVAL

TEST REPORT

FOR

PRESSURE GAUGE, 6-INCH, 0- TO 1500-PSIG

U. S. Gauge Company Part Number 1838

NASA Drawing Number 75M09618 PPG-3

SUBMITTED BY

R. A. Bryant
Test and Evaluation Section

APPROVALS

R. W. Claunch
Program Supervisor

V. J. Venko
Director, Engineering Department

DISTRIBUTION

Chrysler Corporation Space Division

C. A. Brakebill	Test and Evaluation Section	2
R. W. Claunch	Program Supervisor, CCSD-Michoud	2
W. E. Dempster	Program Manager, CCSD-FO	6
E. J. Dofter	Chief Engineer, Reliability Engineering Branch	1
L. L. Gray	Test and Evaluation Section	5
P. Perani	Manager, Test and Evaluation Section	2
L. T. Scherer, Jr.	Manager, Data Center Section	1
V. J. Vehko	Director, Engineering Department	1

Technical Files	3
Technical Information Centre	1
Technical Writing and Editing Group	1

National Aeronautics and Space Administration

Marshall Space Flight Center	
MS-IP, Bldg. 4200	3
APIC	1
John F. Kennedy Space Center	
MD	1
ME (Electrical only)	1
MJ (Electrical only)	1
MG	1
MH	1
ML, Mr. Fedor	1
RC-423	5
Scientific and Technical Information Facility P. O. Box 33 College Park, Maryland 20740	2