S I & F

ENGINEERING DEPARTMENT

TECHNICAL REPORT

TR-RE-CCSD-FO-1084-3

December 1, 1966

SATURN IB PROGRAM

TEST REPORT FOR

PRESSURE GAUGE, 4-1/2-INCH, 0-TO 100-PSIG

U.S. Gauge Company Part Number 5002

NASA Drawing Number 75M04406 PPG-5

FACILITY FORM 602

N67-26337 (ACCESSION NUMBER) (THRU)

37 (PAGES) 5 (CODE)

CR-84030 (NASA CR OR TMX OR AD NUMBER) 14 (CATEGORY)

SPACE DIVISION CHRYSLER CORPORATION

TEST REPORT
FOR
PRESSURE GAUGE, 4-1/2-INCH, 0-TO 100-PSIG

U.S. Gauge Company Part Number 5002

NASA Drawing Number 75M04406 PPG-5

ABSTRACT

This report presents the results of tests performed on one specimen of Pressure Gauge 75M04406 PPG-5. The following tests were performed:

1. Receiving Inspection
2. Proof Pressure
3. Functional
4. Low Temperature
5. High Temperature
6. Cycle
7. Burst

The specimen performance was in accordance with the specification requirements of NASA drawing 75M04406 PPG-5 throughout the test program.

TR-RE-CCSD-FO-1084-3

TEST REPORT

FOR

PRESSURE GAUGE, 4-1/2-INCH, 0-TO 100-PSIG

U.S. Gauge Company Part Number 5002

NASA Drawing Number 75M04406 PPG-5

December 1, 1966

CHRYSLER CORPORATION SPACE DIVISION - NEW ORLEANS, LOUISIANA

3105-2-15-67

FOREWORD

The tests reported herein were conducted for the John F. Kennedy Space Center by Chrysler Corporation Space Division (CCSD), New Orleans, Louisiana. This document was prepared by CCSD under contract NAS8-4016, Part VII, CWO 271620.

TABLE OF CONTENTS

Section		Page
I	INTRODUCTION	1-1
II	RECEIVING INSPECTION	2-1
III	PROOF PRESSURE TEST	3-1
IV	FUNCTIONAL TEST	4-1
V	LOW TEMPERATURE TEST	5-1
VI	HIGH TEMPERATURE TEST	6-1
VII	CYCLE TEST	7-1
VIII	BURST TEST	8-1

LIST OF ILLUSTRATIONS

Figure		Page
FRONTISPIECE		vi
3-1	PROOF PRESSURE TEST SCHEMATIC	3-3
3-2	PROOF PRESSURE AND FUNCTIONAL TEST SETUP	3-4
4-1	FUNCTIONAL AND TEMPERATURE TEST SCHEMATIC	4-5
4-2	FUNCTIONAL AND TEMPERATURE TEST SETUP	4-6
7-1	CYCLE TEST SCHEMATIC	7-16
7-2	CYCLE TEST SETUP	7-17
7-3	TYPICAL CYCLE TEST WAVEFORM	7-18
8-1	BURST TEST SCHEMATIC	8-3
8-2	BURST TEST SETUP	8-4

LIST OF TABLES

Table		Page
2-1	SPECIMEN NOMENCLATURE AND SIZE	2-1
3-1	PROOF PRESSURE TEST EQUIPMENT LIST	3-2
3-2	PROOF PRESSURE AND LEAKAGE TEST DATA	3-2
4-1	FUNCTIONAL AND TEMPERATURE TEST EQUIPMENT LIST	4-3
4-2	INITIAL FUNCTIONAL TEST DATA	4-4
5-1	RESULTS OF FUNCTIONAL TEST DURING +20°F ENVIRONMENT	5-2
5-2	RESULTS OF FUNCTIONAL TEST AFTER +20°F ENVIRONMENT	5-3
6-1	RESULTS OF FUNCTIONAL TEST DURING +140°F ENVIRONMENT	6-2
6-2	RESULTS OF FUNCTIONAL TEST AFTER +140°F ENVIRONMENT	6-3
7-1	CYCLE TEST EQUIPMENT LIST	7-3
7-2	RESULTS OF FUNCTIONAL TEST BEFORE CYCLE TEST	7-5
7-3	RESULTS OF FUNCTIONAL TEST AFTER 500 CYCLES	7-6
7-4	RESULTS OF FUNCTIONAL TEST AFTER 1000 CYCLES	7-7

LIST OF TABLES (Continued)

Table		Page
7-5	RESULTS OF FUNCTIONAL TEST AFTER 5000 CYCLES	7-8
7-6	RESULTS OF FUNCTIONAL TEST AFTER 10,000 CYCLES	7-9
7-7	RESULTS OF FUNCTIONAL TEST AFTER 15,000 CYCLES	7-10
7-8	RESULTS OF FUNCTIONAL TEST AFTER 20,000 CYCLES	7-11
7-9	RESULTS OF FUNCTIONAL TEST AFTER 25,000 CYCLES	7-12
7-10	RESULTS OF FUNCTIONAL TEST AFTER 30,000 CYCLES	7-13
7-11	RESULTS OF FUNCTIONAL TEST AFTER 35,000 CYCLES	7-14
7-12	RESULTS OF FUNCTIONAL TEST AFTER 40,000 CYCLES	7-15
8-1	BURST TEST EQUIPMENT LIST	8-2
8-2	BURST TEST DATA	8-2

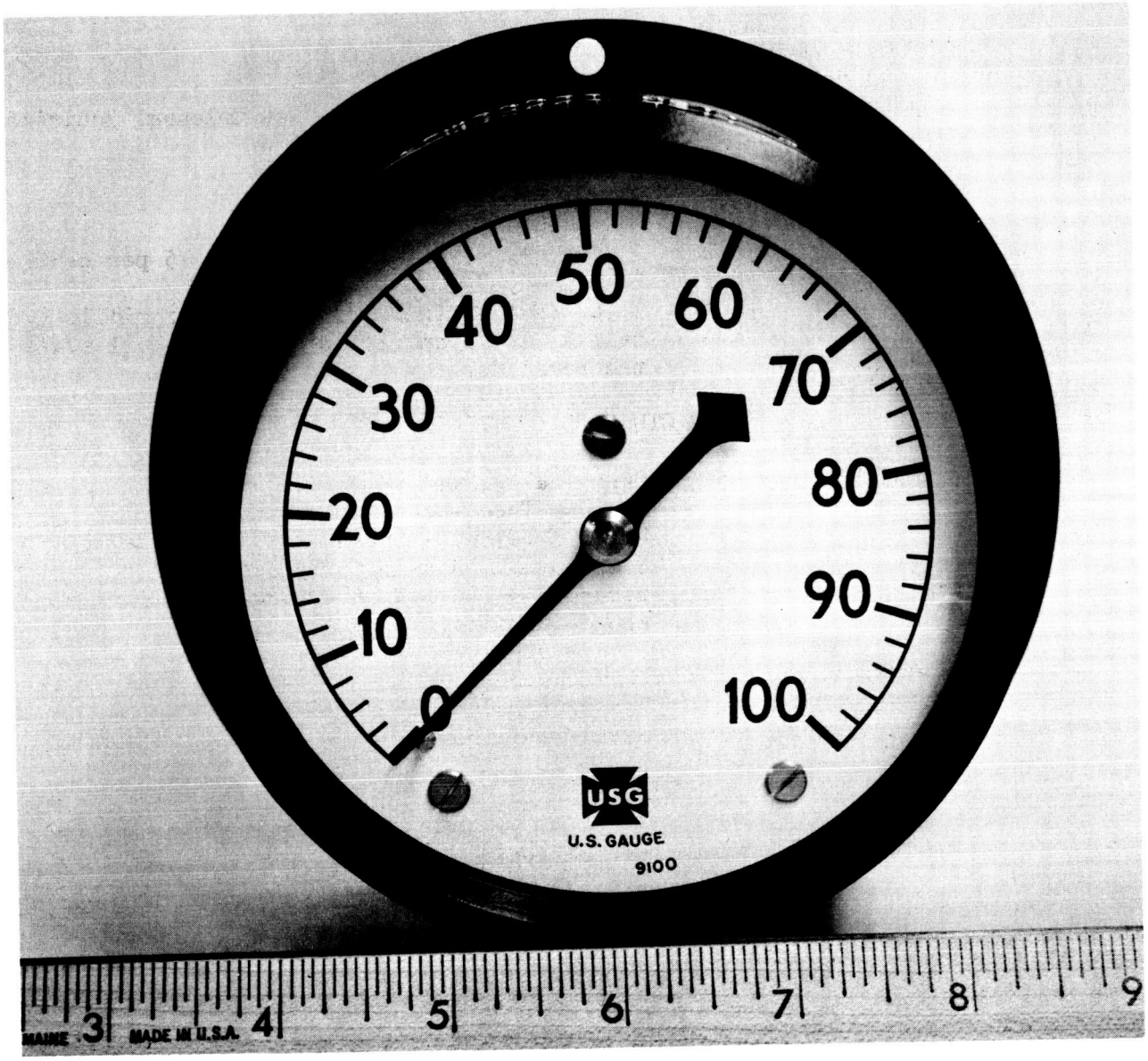

Pressure Gauge 75M04406 PPG-5, $4\frac{1}{2}$-Inch, 0- to 100-psig

CHECK SHEET

FOR

PRESSURE GAUGE, 4-1/2-INCH, 0-TO 100-PSIG

MANUFACTURER: U. S. Gauge Company
MANUFACTURER'S PART NUMBER: 5002
NASA DRAWING NUMBER: 75M04406 PPG-5
TESTING AGENCY: Chrysler Corporation Space Division, New Orleans, Louisiana
AUTHORIZING AGENCY: NASA KSC

I. FUNCTIONAL REQUIREMENTS

A. OPERATING MEDIUM: 25 per cent ethlyene glycol and 75 per cent water
B. OPERATING RANGE: 0 to 100 psig
C. ACCURACY: 1 per cent of full scale range for middle (working) half of scale and 1.5 per cent of full scale for the remainder

II. CONSTRUCTION - MANUFACTURER'S SPECIFICATIONS

A. MATERIAL:
Case - aluminum
Bourdon Tube - phosper bronze
Meter Movement - brass
Dial Cover - nonshatter glass
Socket and Connection - forged brass
Ring - aluminum
Dial - steel
B. GAUGE SIZE: 4-1/2 inches
C. CONNECTION: 1/4 inch male NPT
D. GAUGE MOUNTING: Back Flange Mounting

III. ENVIRONMENTAL CHARACTERISTICS

A. TEMPERATURE RANGE: -20 to +140°F

IV. LOCATION AND USE: The gauge is used at Complex 34 in the Environmental Control System to indicate water pressure.

TEST SUMMARY

PRESSURE GAUGE

75M04406 PPG-4

Environment	Units	Operational Boundary	Test Objective	Test Results	Remarks
Receiving Inspection	1	Comply with NASA drawing 75M04406 PPG-5	Determine compliance with NASA and vendor drawings and examined for defects or poor workmanship	Satisfactory	
Proof Pressure Test	1	100 psig	Check for leakage	Satisfactory	No leakage
Initial Functional Test	1	0 to 100 to 0 psig	Check specimen against laboratory gauge for accuracy	Satisfactory	Maximum error was 0.4% of full scale
Low Temperature Test	1	+20°F	Determine if specimen performance is impaired by low temperature	Satisfactory	Maximum error was 1.4% of full scale at 90 psig
High Temperature Test	1	140°F	Determine if specimen performance is impaired by high temperature	Satisfactory	Maximum error was 1.1% of full scale at 100 psig
Cycle Test	1	0 to 100 to 0 psig; 40,000 cycles	Determine if specimen performance is impaired by cycling	Satisfactory	Maximum error during cycle test was 1% of full scale at 20 psig
Burst Test	1	--	250 psig	Satisfactory	No leakage

SECTION I

INTRODUCTION

1.1 SCOPE

This report presents the results of tests that were performed to determine if pressure gauge 75M04406 PPG-5 meets the operational requirements for John F. Kennedy Space Center Launch Complexes 34 and 37B. A summary of the test results is presented on page viii.

1.2 ITEM DESCRIPTION

1.2.1 One specimen of pressure gauge 75M04406 PPG-5 was tested. The gauge is used in the environmental control system to indicate water/glycol pressure.

1.2.2 Pressure gauge 75M04406 PPG-5 is manufactured by U.S. Gauge Company as vendor part number 5002. The pressure gauge size is 4½ inches, and the scale range is 0 to 100 psig. The gauge is designed to indicate pressure with an accuracy at 1.0 per cent for the middle half of the scale and 1.5 per cent of full scale for the remainder of the scale.

1.3 APPLICABLE DOCUMENTS

1.3.1 The following documents contain the test requirements for pressure gauge 75M04406 PPG-5.

a. KSC-STD-164(D), Standard Environmental Test Methods for Ground Support Equipment Installations at Cape Kennedy

b. NASA Drawing 75M04406 PPG-5

c. Test Plan CCSD-FO-1084-1

SECTION II

RECEIVING INSPECTION

2.1 TEST REQUIREMENTS

The pressure gauge shall be visually and dimensionally inspected for conformance with NASA drawing 75M04406 PPG-45 and applicable specifications to the extent possible without disassembly of the test specimen. The specimen shall also be inspected for poor workmanship and manufacturing defects.

2.2 TEST PROCEDURE

A visual and dimensional inspection of the test specimen was performed to determine compliance with NASA drawing 75M04406 PPG-5 and the applicable vendor drawing to the extent possible without disassembly of the test specimen. At the same time the test specimen was also inspected for poor workmanship and manufacturing defects.

2.3 TEST RESULTS

The specimen complied with NASA drawing 75M04406 PPG-5. No evidence of poor workmanship or manufacturing defects were observed.

2.4 TEST DATA

The data presented in table 2-1 were recorded during the inspection.

Table 2-1. Specimen Nomenclature and Size

Name	Pressure Gage
Manufacturer	U.S. Gauge Co.
Model Number	5002
Pressure Range	0 to 100 psig
Dial Size	4.5 inches
Fitting Size	1/4 inch male NPT

SECTION III

PROOF PRESSURE TEST

3.1 TEST REQUIREMENTS

3.1.1 A proof pressure test shall be performed on the test specimen to check the specimen for leakage.

3.1.2 The gauge shall be subjected to a pressure of 100 psig for 5 minutes with H_2O as the pressure medium.

3.1.3 Any visible leakage shall be noted.

3.2 TEST PROCEDURE

3.1.1 The proof pressure test setup was assembled as shown in figures 3-1 and 3-2 utilizing the equipment listed in table 3-1. It was determined that all connections were tight, all gauges were installed and operating properly, and all valves were closed.

3.2.2 Hand valves 3 and 4 were opened.

3.2.3 Using H_2O pressure from hand pump 5, the system was purged of air.

3.2.4 Hand valve 3 was closed.

3.2.5 Using hand pump 5, the specimen pressure was slowly increased to 100 psig as indicated on gauge 2.

3.2.6 The pressure was monitored for 5 minutes and the specimen was checked for any external leakage.

3.2.7 Hand valve 3 was opened and the system was vented.

3.3 TEST RESULTS

No specimen leakage was determined and there was no evidence of damage.

3.4 TEST DATA

The data presented in table 3-2 were recorded during the test.

Table 3-1. Proof Pressure Test Equipment List

Item No.	Item	Manufacturer	Model/ Part No.	Serial No.	Remarks
1	Test Specimen	U.S. Gauge Co.	5002	N/A	Pressure gauge, 0-to 100-psig
2	Laboratory Gauge	Heise	08-113 014226	N/A	0-to 200-psig 0.5% FS accuracy Cal. date 8-26-66
3	Hand Valve	Robbins Valve Co.	SSTG-250-4T	N/A	1/4-inch
4	Hand Valve	Robbins Valve Co.	SSTG-250-4T	N/A	1/4-inch
5	Hand Pump	Pressure Products Industries	N/A	K750	

Table 3-2. Proof Pressure and Leakage Test Data

Pressure	100 psig for 5 minutes
Leakage	zero
Distortion	none

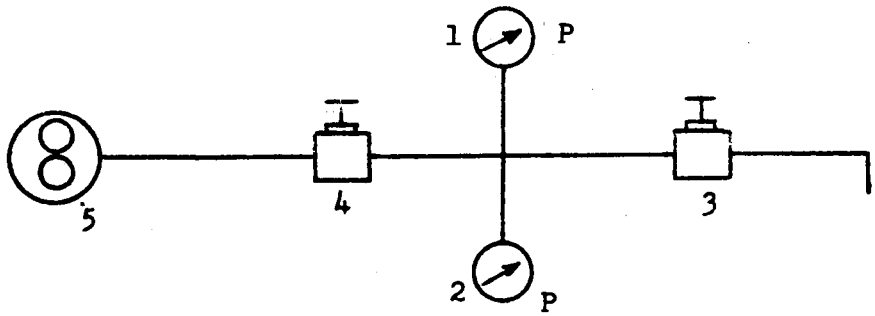

Note: All lines 1/4 inch.
Refer to table 3-1 for item identification.

Figure 3-1. Proof Pressure Test Schematic

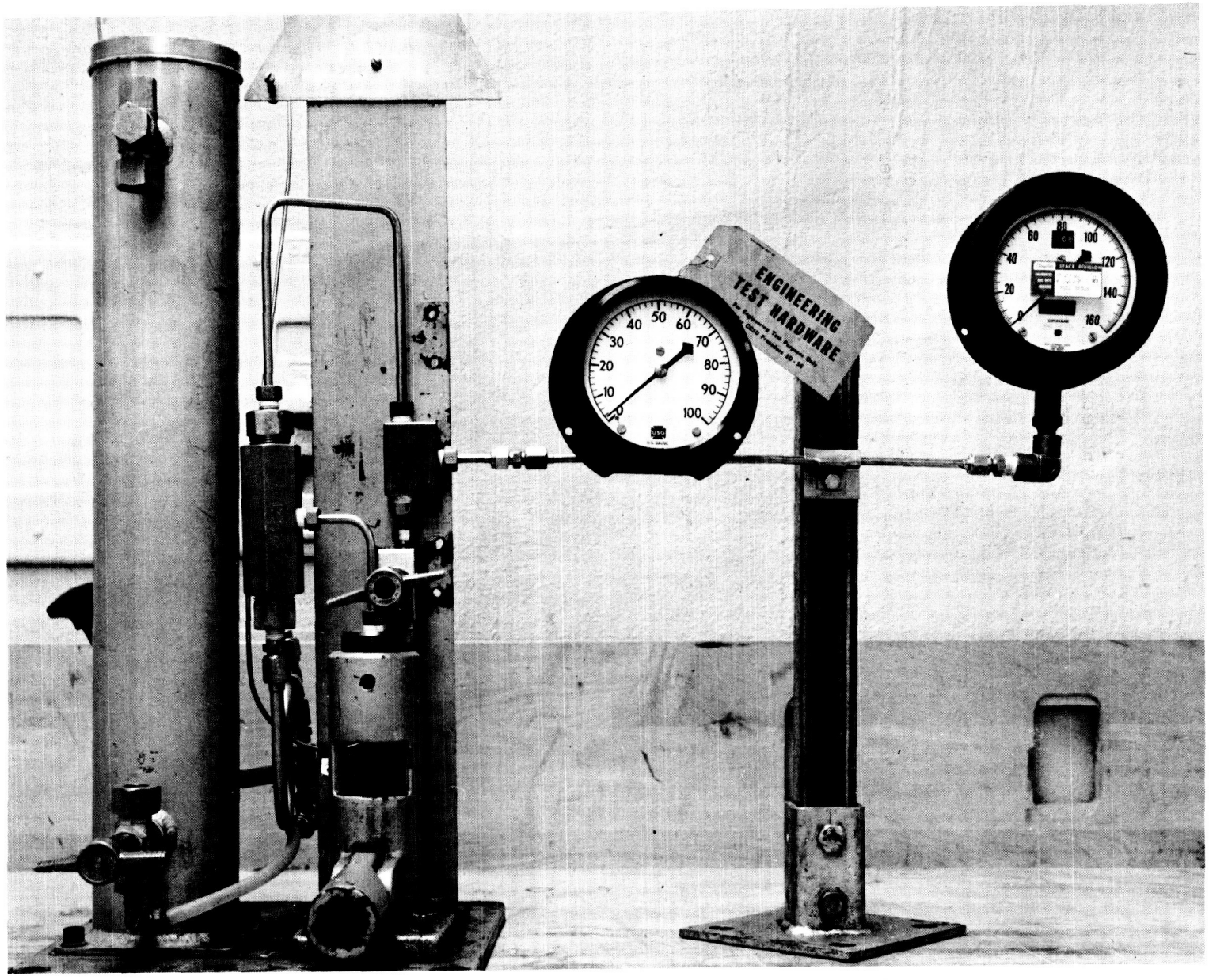

Figure 3-2. Proof Pressure and Functional Test Setup

SECTION IV

FUNCTIONAL TEST

4.1 TEST REQUIREMENTS

4.1.1 The test specimen shall be subjected to an initial functional test consisting of 10 cycles from zero to 100 to zero psig using H_2O as the test medium.

4.1.2 The test specimen shall be subjected to five cycles from zero to 100 to zero psig in all subsequent functional tests.

4.1.3 Pressure readings shall be taken in 10-psig increments and monitored. The accuracy of the readings shall be verified with a laboratory gauge.

4.2 TEST PROCEDURE

4.2.1 The functional test setup was assembled as shown in figures 4-1 and 4-2 utilizing the equipment listed in table 4-1. All connections were tight, gauges were installed and operating properly, and all valves were closed.

4.2.2 Hand valve 3 was opened.

4.2.3 Using H_2O pressure from hand pump 4, the system was purged free of air.

4.2.4 Hand valve 3 was closed.

4.2.5 When gauge 2 indicated zero psig, the reading of the test specimen was recorded.

4.2.6 Using hand pump 4, the pressure was slowly increased in 10-psig increments, as indicated by the test specimen, until 100 psig was reached. The pressure indicated by the laboratory gauge at each 10-psig increment was recorded.

4.2.7 The pressure was decreased in 10-psig increments, as indicated by the test specimen, until zero was reached. The pressure indicated by the laboratory gauge at each 10-psig decrease was recorded.

4.2.8 Hand valve 3 was opened to vent the system.

4.2.9 During the initial functional test, the procedures described in 4.2.2 through 4.2.7 were performed 10 times (10 cycles).

4.3 TEST RESULTS

4.3.1 The test specimen demonstrated satisfactory accuracy, operation, and resolution during the initial functional test. The test specimen indication was exact at zero, and a maximum of 0.4 per cent of full scale from 10 through 100 psig.

4.4 TEST DATA

The data presented in table 4-2 were recorded during the initial functional test.

Table 4-1. Functional and Temperature Test Equipment List

Item No.	Item	Manufacturer	Model/ Part No.	Serial No.	Remarks
1	Test Specimen	U.S. Gauge Co.	5002	N/A	Pressure gauge, 0-to 100-psig
2	Laboratory Gauge	Heise	08-113-014226	N/A	0-to 100-psig 0.1% FS accuracy Cal. date 8-26-66
3	Hand Valve	Robbins Valve Co.	SSTG-250-4T	N/A	1/4-inch
4	Hand Pump	Pressure Products Industries	N/A	K-750	
5	Environmental Chamber	Conrad	08-113. 200922	N/A	Temperature tests only

Table 4-2. Initial Functional Test Data

Specimen Indication (psig)	Laboratory Gauge Indication (psig)									
	Cycle 1	Cycle 2	Cycle 3	Cycle 4	Cycle 5	Cycle 6	Cycle 7	Cycle 8	Cycle 9	Cycle 10
0	0	0	0	0	0	0	0	0	0	0
10	10.2	10.3	10.2	10.2	10.2	10.2	10.3	10.2	10.2	10.3
20	20.1	20.2	20.1	20.2	20.2	20.2	20.1	20.2	20.1	20.2
30	30.1	30.2	30.2	30.1	30.2	30.2	30.2	30.2	30.2	30.1
40	40.2	40.1	40.2	40.2	40.1	40.2	40.1	40.1	40.2	40.1
50	50.1	50.2	50.1	50.1	50.2	50.1	50.2	50.1	50.2	50.2
60	60.3	60.2	60.3	60.3	60.3	60.3	60.3	60.3	60.2	60.3
70	70.2	70.2	70.2	70.3	70.2	70.2	70.2	70.2	70.3	70.2
80	80.2	80.1	80.2	80.2	80.2	80.1	80.2	80.2	80.2	80.2
90	90.2	90.2	90.2	90.3	90.2	90.2	90.3	90.2	90.2	90.3
100	100.2	100.3	100.3	100.2	100.2	100.2	100.2	100.3	100.2	100.3
90	90.1	90.2	90.1	90.1	90.1	90.2	90.2	90.1	90.1	90.1
80	80.1	80.1	80.1	80.2	80.2	80.1	80.1	80.1	80.1	80.1
70	70.0	70.1	70.1	70.1	70.1	70.1	70.0	70.1	70.1	70.1
60	60.3	60.4	60.3	60.4	60.3	60.3	60.4	60.4	60.3	60.4
50	50.1	50.2	50.1	50.2	50.2	50.2	50.1	50.2	50.2	50.2
40	40.0	40.0	40.1	40.1	40.0	40.1	40.1	40.0	40.1	40.1
30	30.1	30.2	30.2	30.3	30.2	30.1	30.2	30.2	30.1	30.1
20	20.1	20.1	20.2	20.2	20.2	20.1	20.2	20.2	20.1	20.1
10	10.2	10.2	10.3	10.2	10.2	10.2	10.2	10.2	10.2	10.2
0	0	0	0	0	0	0	0	0	0	0

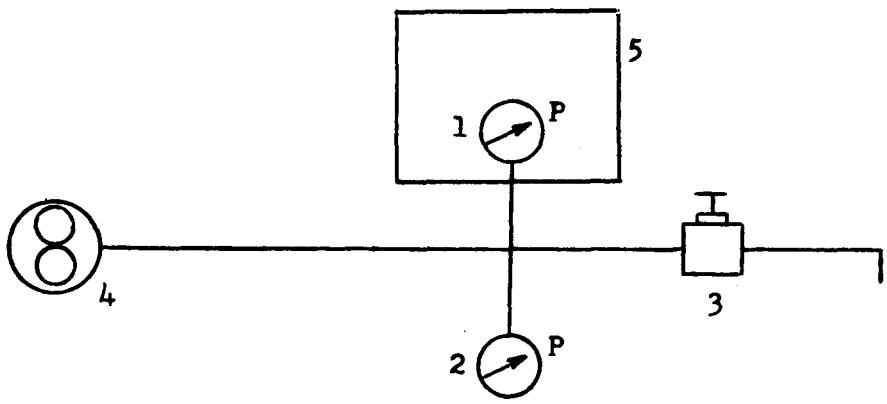

Note: All lines 1/4 inch.
Refer to table 4-1 for item identification.

Figure 4-1. Functional and Temperature Test Schematic

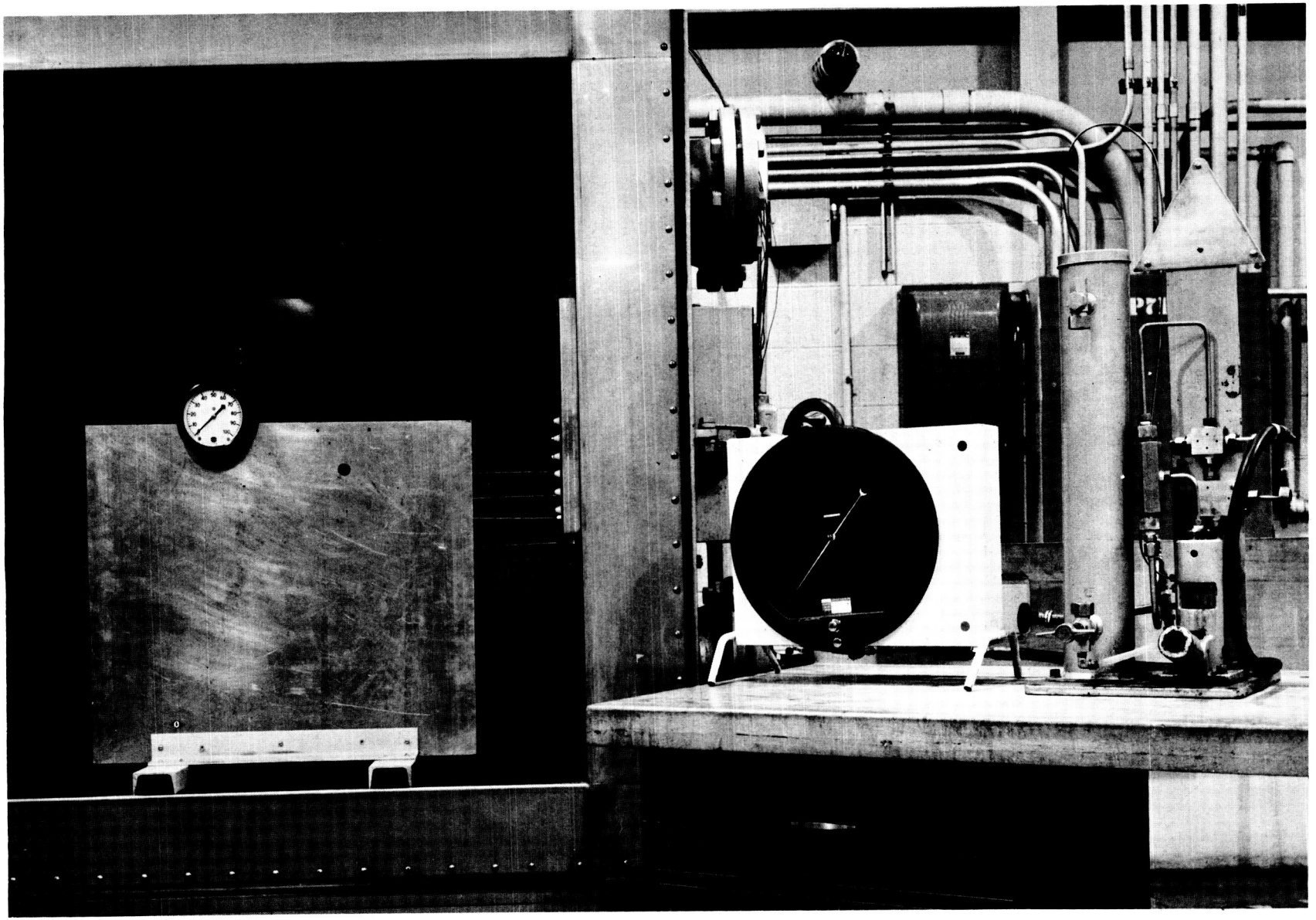

Figure 4-2. Functional and Temperature Test Setup

SECTION V

LOW TEMPERATURE TEST

5.1 TEST REQUIREMENTS

5.1.1 A low temperature test shall be performed on the test specimen to determine whether the environment causes deformation or degradation.

5.1.2 The specified low temperature is +20 (+0, -4)°F. The maximum temperature change rate shall be 1°F per minute.

5.1.3 A functional test shall be performed during and after the low temperature environment.

5.2 TEST PROCEDURE

5.2.1 The test specimen was placed in a low temperature chamber utilizing the test setup shown in figures 4-1 and 4-2 and equipment listed in table 4-1. The test medium was a solution of 25 per cent ethylene glycol and 75 per cent H_2O.

5.2.2 The chamber was controlled to the conditions specified in 5.1.2, and a relative humidity between 60 and 90 per cent was maintained.

5.2.3 A functional test was performed when temperature stabilization was obtained.

5.2.4 The temperature of the chamber was returned to ambient conditions upon completion of the functional test.

5.2.5 A functional test was performed when the specimen was returned to ambient conditions.

5.3 TEST RESULTS

The test specimen demonstrated satisfactory performance during and after the +20°F environment. No degradation or deformation was noted.

5.4 TEST DATA

The data presented in tables 5-1 and 5-2 were recorded during and after the +20°F environment.

Table 5-1. Results of Functional Test During +20°F Environment

Specimen Indications (psig)	Laboratory Gauge Indication (psig)				
	Cycle 1	Cycle 2	Cycle 3	Cycle 4	Cycle 5
0	0	0	0	0	0
10	10.5	10.6	10.5	10.5	10.5
20	20.5	20.5	20.6	20.5	20.5
30	30.5	30.6	30.6	30.6	30.6
40	40.8	40.7	40.7	40.8	40.8
50	50.9	51.0	51.0	50.9	51.0
60	61.1	61.1	61.0	61.0	61.1
70	71.0	71.0	71.1	71.1	71.0
80	81.1	81.0	81.1	81.1	81.0
90	91.4	91.3	91.4	91.4	91.4
100	101.2	101.3	101.2	101.2	101.2
90	91.3	91.4	91.3	91.3	91.4
80	81.1	81.0	81.1	81.1	81.1
70	71.0	71.0	71.1	71.1	71.0
60	61.1	61.1	61.1	61.1	61.0
50	50.9	50.9	50.9	50.9	50.9
40	40.6	40.7	40.7	40.7	40.6
30	30.5	30.6	30.6	30.6	30.6
20	20.5	20.5	20.5	20.5	20.5
10	10.3	10.4	10.4	10.3	10.3
0	0	0	0	0	0

Table 5-2. Results of Functional Test After +20°F Environment

Specimen Indications (psig)	Laboratory Gauge Indication (psig)				
	Cycle 1	Cycle 2	Cycle 3	Cycle 4	Cycle 5
0	0	0	0	0	0
10	10.4	10.4	10.4	10.4	10.4
20	20.2	20.3	20.3	20.2	20.2
30	30.3	30.3	30.4	30.4	30.4
40	40.3	40.4	40.4	40.3	40.4
50	50.3	50.3	50.3	50.3	50.3
60	60.5	60.4	60.5	60.5	60.5
70	70.2	70.3	70.3	70.2	70.3
80	80.2	80.3	80.2	80.2	80.3
90	90.3	90.3	90.3	90.3	90.3
100	100.2	100.3	100.3	100.3	100.2
90	90.3	90.3	90.3	90.2	90.2
80	80.2	80.2	80.2	80.2	80.2
70	70.2	70.3	70.2	70.3	70.2
60	60.4	60.4	60.3	60.4	60.4
50	50.3	50.4	50.4	50.4	50.4
40	40.3	40.4	40.4	40.3	40.4
30	30.3	30.4	30.4	30.4	30.3
20	20.2	20.3	20.3	20.2	20.2
10	10.5	10.4	10.5	10.5	10.5
0	0	0	0	0	0

SECTION VI

HIGH TEMPERATURE TEST

6.1 TEST REQUIREMENTS

6.1.1 A high temperature test will be performed on the test specimen to determine whether the environment causes degradation or deformation.

6.1.2 The specified high temperature is +140 (+4, -0)°F and the maximum temperature change rate shall be 1°F per minute.

6.1.3 A functional test shall be performed during and after the high temperature test.

6.2 TEMPERATURE TEST

6.2.1 The test specimen was placed in a high temperature chamber utilizing the test setup shown in figures 4-1 and 4-2 and the equipment listed in table 4-1. The test medium was a solution of 25 per cent glycol and 75 per cent H_2O.

6.2.3 The chamber was controlled to the conditions specified in 6.1.2 and a relative humidity of 20 per cent was maintained.

6.2.4 Temperature was maintained for 72 hours.

6.2.5 A functional test was performed while the high temperature was maintained.

6.2.6 A functional test was performed after the specimen was returned to ambient conditions.

6.3 TEST RESULTS

The test specimen demonstrated satisfactory performance during and after the +140°F environment. No deformation or degradation was noted.

6.4 TEST DATA

The data presented in tables 6-1 and 6-2 were recorded during and after the +140°F environment.

Table 6-1. Results of Functional Test During +140°F Environment

Specimen Indications (psig)	Laboratory Gauge Indication (psig)				
	Cycle 1	Cycle 2	Cycle 3	Cycle 4	Cycle 5
0	0	0	0	0	0
10	10.4	10.4	10.4	10.4	10.4
20	20.1	20.2	20.2	20.1	20.2
30	30.1	30.1	30.1	30.1	30.1
40	39.9	39.9	39.9	39.9	39.9
50	49.9	49.9	49.9	49.9	49.9
60	59.8	59.8	59.8	59.8	59.8
70	69.4	69.5	69.4	69.5	69.4
80	79.3	79.4	79.3	79.4	79.4
90	89.2	89.3	89.2	89.2	89.3
100	98.9	98.9	99.0	99.0	98.9
90	89.3	89.2	89.2	89.2	89.3
80	79.3	79.3	79.3	79.2	79.2
70	69.4	69.4	69.4	69.4	69.4
60	59.8	59.8	59.8	59.8	59.8
50	49.9	49.9	49.9	49.9	49.9
40	39.8	39.8	39.8	39.8	39.8
30	30.0	30.0	30.0	30.1	30.0
20	20.0	20.1	20.0	20.1	20.1
10	10.3	10.3	10.4	10.4	10.3
0	0	0	0	0	0

Table 6-2. Results of Functional Test After +140°F Environment

Specimen Indications (psig)	Laboratory Gauge Indication (psig)				
	Cycle 1	Cycle 2	Cycle 3	Cycle 4	Cycle 5
0	0	0	0	0	0
10	10.4	10.4	10.4	10.4	10.4
20	20.2	20.2	20.3	20.3	20.2
30	30.3	30.3	30.3	30.3	30.3
40	40.3	40.3	40.3	40.3	40.3
50	50.3	50.3	50.3	50.3	50.3
60	60.5	60.4	60.4	60.4	60.5
70	70.2	70.2	70.3	70.3	70.3
80	80.2	80.3	80.2	80.3	80.2
90	90.2	90.3	90.2	90.2	90.3
100	100.2	100.2	100.2	100.2	100.2
90	90.3	90.2	90.3	90.2	90.3
80	80.2	80.2	80.2	80.2	80.2
70	70.2	70.2	70.2	70.2	70.2
60	60.4	60.3	60.3	60.3	60.3
50	50.2	50.2	50.3	50.2	50.3
40	40.3	40.2	40.3	40.2	40.2
30	30.2	30.3	30.3	30.3	30.2
20	20.2	20.2	20.2	20.2	20.2
10	10.4	10.3	10.3	10.4	10.4
0	0	0	0	0	0

SECTION VII

CYCLE TEST

7.1 TEST REQUIREMENTS

7.1.1 A cycle test shall be performed on the test specimen to determine whether the environment causes degradation or deformation.

7.1.2 The cycle test shall consist of pressurizing the test specimen from zero to 100 psig and back to zero within 6 to 10 seconds.

7.1.3 The specimen shall be functionally cycled to determine fatigue life. Functional tests shall be performed after 500, 1000, and 5000 cycles, and each 5000 cycles thereafter. Do not exceed 40,000 cycles.

7.2 TEST PROCEDURE

7.2.1 The cycle test setup was assembled as shown in figures 7-1 and 7-2 utilizing the equipment listed in table 7-1. All connections were tight, gauges were installed and operating properly, and all valves were closed.

7.2.2 Hand valves 5 and 6 and regulator 7 were opened.

7.2.3 Solenoid valve 9 was actuated to the vent position.

7.2.4 The system on the specimen side of the accumulator 3 piston was filled with H_2O.

7.2.5 Valve 6 and regulator 7 were closed and hand valve 15 and regulator 10 were opened.

7.2.6 Air supply 16 was turned on.

7.2.7 Timer 12 was adjusted to cycle solenoid valve 9 so that air pressure was on the specimen for 3 seconds and off for 3 seconds.

7.2.8 Pressure regulator 10 was adjusted so that a maximum H_2O pressure of 100 psig was exerted on the test specimen when air was allowed to flow into accumulator 3.

7.2.9 Flow regulator 7 was adjusted so that the test specimen was pressurized from zero to 100 psig in 4.9 seconds and depressurized from 100 to zero psig in 3.6 seconds as smoothly as possible.

7.2.10 Hand valve 5 was closed.

7.2.11 After the required cycle pattern was established, the test specimen was subjected to 40,000 cycles as indicated by counter 13.

7.2.12 A functional test was performed after 500, 1000, and 5000 cycles, and each 5000 cycles thereafter through 40.000 cycles.

7.3 TEST RESULTS

The specimen was subjected to 40.000 cycles. Prior to cycling, the maximum deviation was 0.4 per cent. At the termination of the cycle test, maximum deviation was 1%. The allowable allow-tolerance in this range is 1.5 per cent. Therefore, test test results were considered satisfactory.

7.4 TEST DATA

Functional test data recorded during and after the cycling tests are presented in tables 7-2 through 7-12. Figure 7-3 shows a typical pressure cycle recorded during the test.

Table 7-1. Cycle Test Equipment List

Item No.	Item	Manufacturer	Model/ Part No.	Serial No.	Remarks
1	Test Specimen	U.S. Gauge Company	5002	N/A	Pressure gauge, 0-to 100-psig
2	Oscillograph Recorder	CEC	N/A	08-113 -012587	Cal. date 7/29/66
3	Accumulator	CCSD	N/A	N/A	
4	Pressure Transducer	CEC	2443	N/A	0-to 100-psig ±0.5% FS accuracy Cal. date 9/2/66
5	Hand Valve	Robbins Valve Co.	SSTG-250-4T	N/A	1/4-inch
6	Hand Valve	Robbins Valve Co.	SSTG-250-4T	N/A	1/4-inch
7	Flow Regulator	Marsh Instrument Co.	N/A	1936	1/4-inch
8	Pressure Gauge	Marsh Instrument Co.	NASA 08-113	95-1161-B	0-to 100-psig 0.5% FS accuracy Cal. date 7/27/66
9	Solenoid Valve. 3-way	Marotta	N/A	2916	
10	Pressure Regulator	Grove	15-LX	L41512	6000-psig inlet 3000-psig outlet
11	Pressure Gauge	Duragauge	NASA 08-113 200617-F	N/A	0-to 3000-psig 0.5% FS accuracy Cal. date 9/26/66
12	Cycle Timer	Wilson Co.	08-113 200316	N/A	
13	Counter	Durant Co.	616	N/A	
14	Filter	Bendix	2-S-13460 16-B-0	60	2-micron absolute

Table 7-1. Cycle Test Equipment List (Continued)

Item No.	Item	Manufacturer	Model/ Part No.	Serial No.	Remarks
15	Hand Valve	CPV	380-3	N/A	1-1/2-inch
16	Air Supply	Laboratory Source	N/A	N/A	3000-psig

Table 7-2. Results of Functional Test Before Cycle Test

Specimen Indications (psig)	Laboratory Gauge Indication (psig)				
	Cycle 1	Cycle 2	Cycle 3	Cycle 4	Cycle 5
10	9.7	9.7	9.7	9.7	9.8
20	19.7	19.6	19.7	19.7	19.8
30	29.7	29.6	29.7	29.7	29.8
40	39.8	39.7	39.8	39.8	39.9
50	49.9	49.8	49.8	49.9	49.9
60	60.1	59.9	60	60	60.1
70	69.8	69.8	69.8	69.9	69.8
80	79.8	79.7	79.8	79.8	79.8
90	89.9	89.8	89.8	89.9	89.9
100	99.9	99.8	99.9	99.9	99.9
90	89.9	89.8	89.8	89.9	89.8
80	79.8	79.7	79.9	79.8	79.8
70	69.8	69.8	69.9	69.9	69.9
60	60	59.9	60	60	60
50	49.9	49.8	49.9	49.9	49.9
40	39.8	39.7	39.8	39.8	39.8
30	29.7	29.6	29.7	29.8	29.7
20	19.7	19.6	19.7	19.7	19.7
10	9.7	9.7	9.8	9.8	9.8

Table 7-3. Results of Functional Test After 500 Cycles

Specimen Indications (psig)	Laboratory Gauge Indication (psig)				
	Cycle 1	Cycle 2	Cycle 3	Cycle 4	Cycle 5
10	9.9	9.8	9.8	9.9	9.8
20	19.7	19.7	19.7	19.8	19.7
30	29.8	29.8	29.75	29.8	29.8
40	39.7	39.7	39.75	39.8	39.75
50	49.8	49.8	49.8	49.9	49.8
60	59.85	59.9	59.9	59.9	59.9
70	69.9	69.8	69.8	69.9	69.8
80	79.9	79.8	79.8	79.9	79.8
90	89.9	89.9	90	90	90
100	100	100	100	100	100
90	89.9	89.9	90	89.7	90
80	79.9	79.9	79.8	79.9	79.9
70	69.8	69.8	69.8	69.8	69.9
60	59.9	59.9	59.9	59.9	59.9
50	49.8	49.8	49.9	49.9	49.8
40	39.8	39.7	39.8	39.85	39.8
30	29.75	29.75	29.75	29.8	29.8
20	19.7	19.75	19.7	19.8	19.9
10	9.8	9.8	9.8	9.9	9.9

Table 7-4. Results of Functional Test After 1000 Cycles

Specimen Indications (psig)	Laboratory Gauge Indication (psig)				
	Cycle 1	Cycle 2	Cycle 3	Cycle 4	Cycle 5
10	9.8	9.8	9.8	9.8	9.8
20	19.8	19.75	19.75	19.8	19.8
30	29.75	29.8	29.8	29.8	29.8
40	39.75	39.75	39.75	39.8	39.75
50	49.8	49.85	49.8	49.8	49.9
60	59.9	59.9	59.9	59.9	59.9
70	69.8	69.8	69.8	69.8	69.85
80	79.8	79.9	79.8	79.9	79.9
90	90	90	89.9	90	90
100	100	100	100	100	100
90	90	90	89.9	90	90
80	79.9	79.9	79.8	79.9	79.9
70	69.85	69.8	69.8	69.85	69.9
60	59.9	59.9	59.85	59.9	59.9
50	49.9	49.8	49.8	49.9	49.8
40	39.75	39.8	39.8	39.8	39.8
30	29.8	29.8	29.8	29.8	29.8
20	19.75	19.75	19.75	19.8	19.8
10	9.8	9.9	9.85	9.9	9.9

Table 7-5. Results of Functional Test After 5000 Cycles

Specimen Indications (psig)	Laboratory Gauge Indication (psig)				
	Cycle 1	Cycle 2	Cycle 3	Cycle 4	Cycle 5
10	9.9	9.9	9.9	9.9	9.9
20	19.8	19.9	19.9	19.9	19.9
30	29.8	29.9	29.9	29.9	29.9
40	39.9	39.8	39.85	39.9	39.9
50	49.9	50.1	50	50	50
60	60.1	60.1	60.2	60.1	60.1
70	69.9	69.9	70	69.9	70
80	79.9	79.9	80	79.9	80
90	90	90.1	90.1	90.1	90.1
100	100.1	100.1	100.1	100.1	100.1
90	90.1	90.1	90.1	90	90
80	79.9	80	80	80	80
70	69.9	69.9	69.9	69.9	69.9
60	60.2	60.2	60.1	60.1	60.2
50	50	50	49.9	50	50
40	39.8	39.9	39.9	39.9	39.9
30	29.9	29.9	29.9	29.9	29.9
20	19.9	19.9	19.9	19.9	19.9
10	9.9	10	10	9.9	10

Table 7-6. Results of Functional Test After 10,000 Cycles

Specimen Indications (psig)	Laboratory Gauge Indication (psig)				
	Cycle 1	Cycle 2	Cycle 3	Cycle 4	Cycle 5
10	9.9	10	10	10	9.9
20	19.8	19.9	19.9	19.9	19.9
30	29.8	29.8	29.9	29.9	29.9
40	39.8	39.8	39.9	39.9	39.8
50	49.9	50	49.9	49.9	50
60	60.1	60.1	60.1	60.1	60.1
70	70	70	70	70	70
80	80	80	79.9	80	80
90	90.1	90	90	90.1	90.1
100	100.1	100.1	100	100	100.1
90	90	90	90	90	90.1
80	80	79.9	80	80	80
70	70	70	70	70	70
60	60.2	60.1	60.2	60.1	60.1
50	50.1	50.1	50.1	50.1	50
40	39.9	39.9	39.9	39.9	39.9
30	29.8	29.8	29.8	29.9	29.9
20	19.8	19.8	19.8	19.8	19.8
10	10	10	10	10	10

Table 7-7. Results of Functional Test After 15,000 Cycles

Specimen Indications (psig)	Laboratory Gauge Indication (psig)				
	Cycle 1	Cycle 2	Cycle 3	Cycle 4	Cycle 5
10	9.9	9.9	10	9.9	10
20	19.9	19.8	19.9	19.9	19.9
30	29.9	29.9	29.9	29.9	29.9
40	39.9	39.9	39.9	39.9	39.9
50	50	50	50	50	50
60	60.1	60.2	60.2	60.1	60.1
70	70	70.2	70.2	70.1	70.2
80	79.9	80.1	80.1	80.1	80.1
90	90.1	90.1	90.1	90.1	90.1
100	100	100	100	100	100
90	90.1	90.1	90.1	90.1	90.1
80	80	80	80	80	80
70	70	70.1	70.1	70.1	70.1
60	60.2	60.2	60.2	60.2	60.2
50	50.1	50.1	50.1	50.1	50.1
40	39.9	39.9	39.9	39.9	39.9
30	29.9	29.9	29.9	29.9	29.9
20	19.9	19.8	19.9	19.9	19.9
10	9.9	9.9	9.9	9.9	9.9

Table 7-8. Results of Functional Test After 20,000 Cycles

Specimen Indications (psig)	Laboratory Gauge Indication (psig)				
	Cycle 1	Cycle 2	Cycle 3	Cycle 4	Cycle 5
10	10	10	9.9	9.9	9.9
20	19.9	19.8	19.8	19.8	19.8
30	29.9	29.8	29.8	29.8	29.8
40	39.8	39.8	39.8	39.8	39.8
50	50	49.9	49.9	49.9	49.9
60	60	60.1	60.1	60.2	60.1
70	70	69.9	69.9	69.9	70
80	80	79.9	80	80	80
90	90.2	90	90	90.1	90.1
100	100.1	100	100	100	100
90	90.2	90.1	90	90.1	90
80	80.1	80	79.9	80	79.9
70	70	70	70	69.9	70
60	60.1	60.1	60.1	60.1	60.1
50	50	49.9	50	49.9	50
40	39.9	39.8	39.9	39.8	39.9
30	29.9	29.8	29.8	29.8	29.8
20	19.8	19.8	19.8	19.8	19.8
10	10	9.9	9.9	9.9	9.9

Table 7-9. Results of Functional Test After 25,000 Cycles

Specimen Indications (psig)	Laboratory Gauge Indication (psig)				
	Cycle 1	Cycle 2	Cycle 3	Cycle 4	Cycle 5
10	10	10	10	10	10
20	19.9	19.9	19.9	19.8	19.9
30	29.9	29.9	29.9	29.9	29.9
40	39.9	39.9	39.9	39.8	39.9
50	50.1	50	50	50	50.1
60	60.1	60.1	60	60.2	60.1
70	70	70.1	70.1	70	70.1
80	80.2	80.1	80	80	80.1
90	90.2	90.2	90.2	90.1	90.2
100	100.2	100.2	100.2	100.1	100.2
90	90.2	90.2	90.2	90.1	90.2
80	80	80.1	80	80	80
70	69.9	70	69.9	70	70
60	60.2	60.1	60	60.1	60.1
50	49.9	49.9	49.9	49.9	49.9
40	39.9	39.7	39.8	39.9	39.9
30	29.9	29.8	29.8	29.9	29.85
20	19.8	19.8	19.8	19.8	19.8
10	10	10	10	10	10

Table 7-10. Results of Functional Test After 30,000 Cycles

Specimen Indications (psig)	Laboratory Gauge Indication (psig)				
	Cycle 1	Cycle 2	Cycle 3	Cycle 4	Cycle 5
10	10	10	10	10	10
20	19.9	19.9	19.8	19.8	19.8
30	29.8	29.9	29.8	29.9	29.8
40	39.9	39.8	39.8	39.8	39.8
50	50.1	50	49.9	49.9	50
60	60.2	60.1	60.2	60.1	60.1
70	69.9	69.9	69.9	70	69.9
80	79.9	79.9	80	80	80
90	90.1	90.1	90.1	90.1	90.2
100	100.1	100.1	100.1	100.1	100.1
90	90.1	90.1	90.1	90.1	90
80	80	79.9	80	80	80
70	69.9	69.9	70	70	70
60	60	60.1	60.1	60.1	60.1
50	49.9	49.8	49.9	49.9	49.9
40	39.75	39.7	39.8	39.8	39.8
30	29.8	29.8	29.9	29.8	29.8
20	19.8	19.8	19.8	19.8	19.8
10	9.9	10	10	9.9	10

Table 7-11. Results of Functional Test After 35,000 Cycles

Specimen Indications (psig)	Laboratory Gauge Indication (psig)				
	Cycle 1	Cycle 2	Cycle 3	Cycle 4	Cycle 5
10	9.8	9.8	9.8	9.8	9.8
20	19.8	19.6	19.6	19.7	19.7
30	29.8	29.8	29.8	29.7	29.8
40	39.8	39.8	39.8	39.8	39.8
50	50	50	50	50	49.9
60	60.1	60.1	60	60.1	60.1
70	69.9	69.9	70	70	70
80	79.9	79.9	80	80	80
90	90	90.1	90	90	90
100	100	99.9	100	100	100
90	90.1	90	90	90	90
80	79.8	80	79.9	79.9	79.9
70	69.9	69.9	69.9	69.9	69.9
60	60	60	60	60	60
50	49.9	49.9	49.9	49.9	49.9
40	39.6	39.7	39.7	39.7	39.6
30	29.6	29.7	29.7	29.7	29.7
20	19.6	19.7	19.7	19.6	19.6
10	9.7	9.7	9.7	9.8	9.7

Figure 7-12. Results of Functional Test After 40,000 Cycles

Specimen Indications (psig)	Laboratory Gauge Indication (psig)				
	Cycle 1	Cycle 2	Cycle 3	Cycle 4	Cycle 5
10	9.4	9.3	9.3	9.5	9.4
20	19.2	19	19.1	19.2	19.2
30	29.3	29.2	29.2	29.2	29.2
40	39.2	39.2	39.1	39.1	39.2
50	49.5	49.4	49.3	49.4	49.4
60	59.6	59.5	59.6	59.5	59.5
70	69.5	69.4	69.5	69.5	69.4
80	79.5	79.4	79.4	79.4	79.5
90	89.5	89.4	89.5	89.5	89.5
100	99.5	99.5	99.5	99.5	99.5
90	89.4	89.5	89.5	89.5	89.5
80	79.3	79.3	79.5	79.3	79.3
70	69.3	69.3	69.4	69.3	69.4
60	59.4	59.4	59.5	59.4	59.4
50	49.3	49.3	49.4	49.3	49.3
40	39.2	39	39.2	39.1	39.1
30	29.1	29	29.2	29.1	29.2
20	19	19	19	19	19.1
10	9.1	9.2	9.3	9.3	9.2

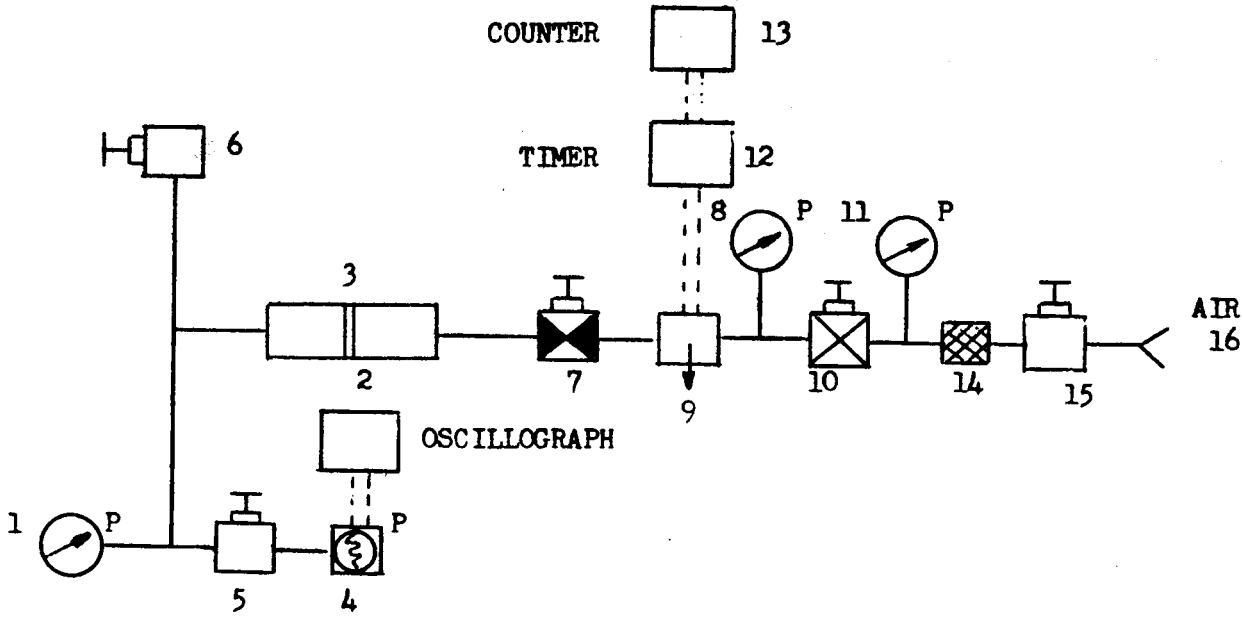

Note: All lines 1/4 inch.
Refer to table 7-1 for item identification.

Figure 7-1. Cycle Test Schematic

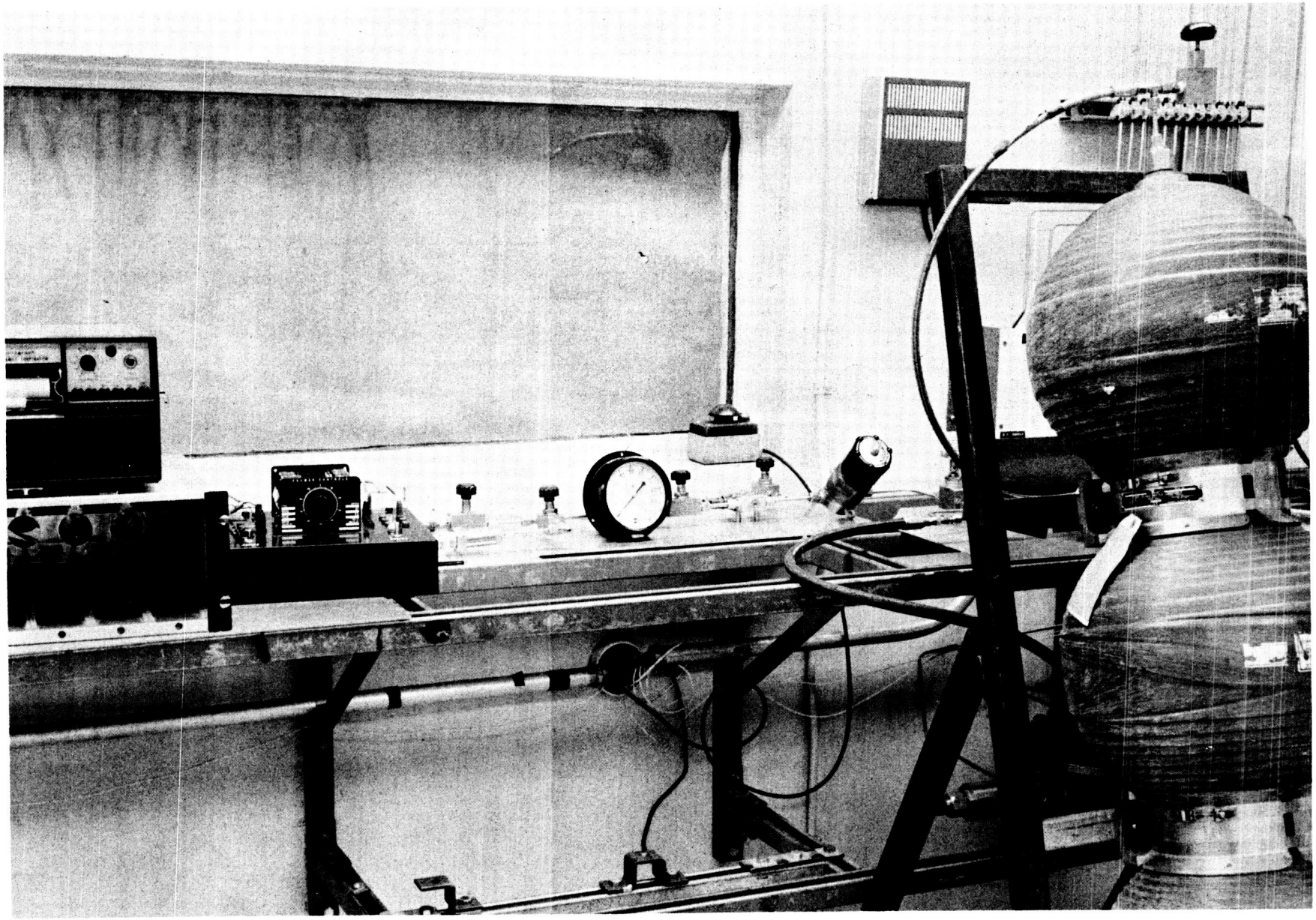

Figure 7-2. Cycle Test Setup

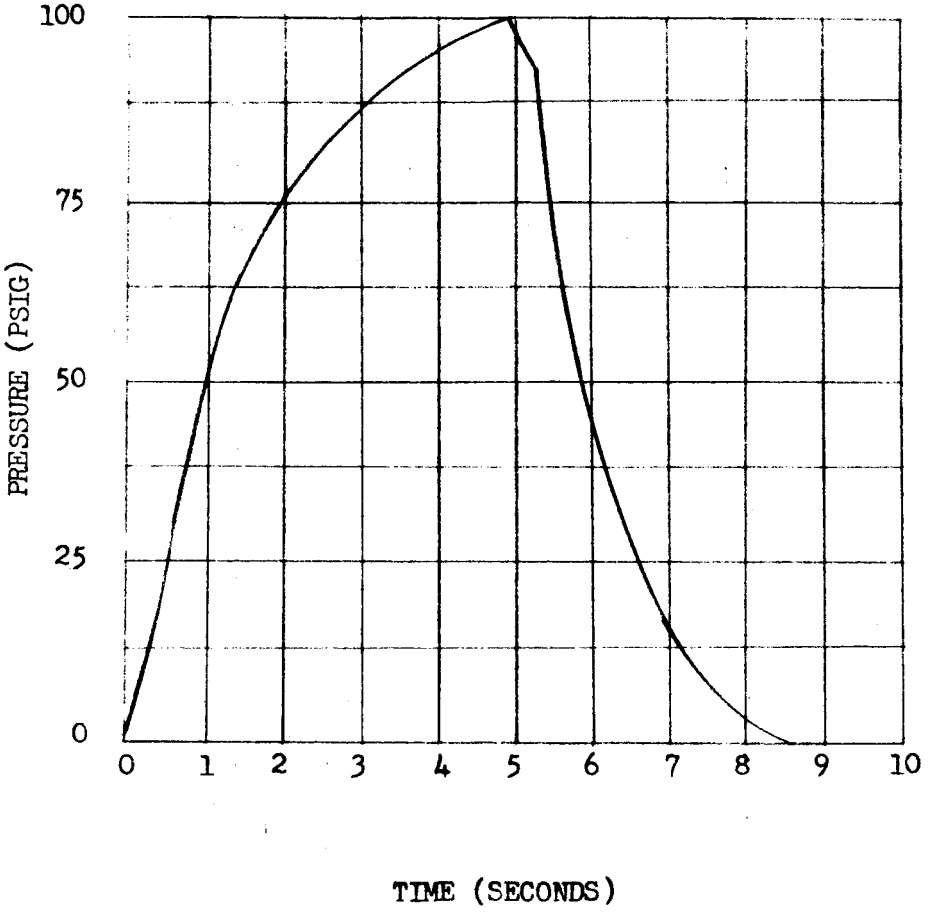

Figure 7-3. Typical Cycle Test Waveform

SECTION VIII

BURST TEST

8.1 TEST REQUIREMENTS

8.1.1 A burst test shall be performed on the test specimen to determine if abnormally high pressure will cause leakage or structural damage to the specimen.

8.1.2 The test specimen shall be subjected to an H_2O pressure at 250 psig for 5 minutes.

8.1.3 Any leakage or structural damage to the test specimen shall be noted.

8.2 TEST PROCEDURE

8.2.1 The burst test setup was assembled as shown in figures 8-1 and 8-2 utilizing the equipment listed in table 8-1.

8.2.2 Hand valves 3 and 4 were opened.

8.2.3 Using H_2O as the test medium. the system was purged of air with hand pump 5.

8.2.4 Hand valve 3 was closed.

8.2.5 Using hand pump 5. the pressure was slowly increased to 250 psig.

8.2.6 Hand valve 4 was closed.

8.2.7 The pressure was monitored for 5 minutes.

8.3 TEST RESULTS

No leakage occurred during the 5-minute pressurization period. When the pressure was vented. the test specimen retained an indication of 3.5 psig.

8.4 TEST DATA

Test data obtained are presented in table 8-2.

Table 8-1. Burst Test Equipment List

Item No.	Item	Manufacturer	Model/ Part No.	Serial No.	Remarks
1	Test Specimen	U.S. Gauge Co.	5002	N/A	Pressure gauge, 0-to 100-psig
2	Laboratory Gauge	Duraguage	95-13728	N/A	0-to 300-psig 0.5% FS accuracy Cal. date 10/9/ 66
3	Hand Valve	Robbins Valve Co.	SSTG-250-4T	N/A	1/4-inch
4	Hand Valve	Robbins Valve Co.	SSTG-250-4T	N/A	1/4-inch
5	Hand Pump	Pressure Products Industries	N/A	K-750	

Table 8-2. Burst Test Data

Pressure	250 psig for 5 minutes
Leakage	none
Distortion	On termination of test, the specimen retained an indication of 3.5 psig.

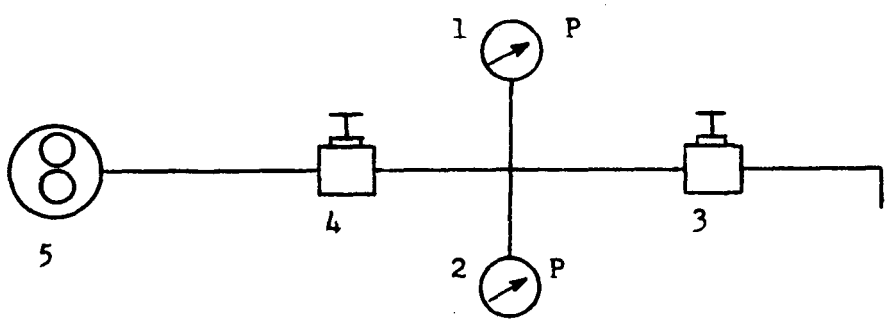

Note: All lines 1/4 inch.
Refer to table 8-1 for item identification.

Figure 8-1. Burst Test Schematic

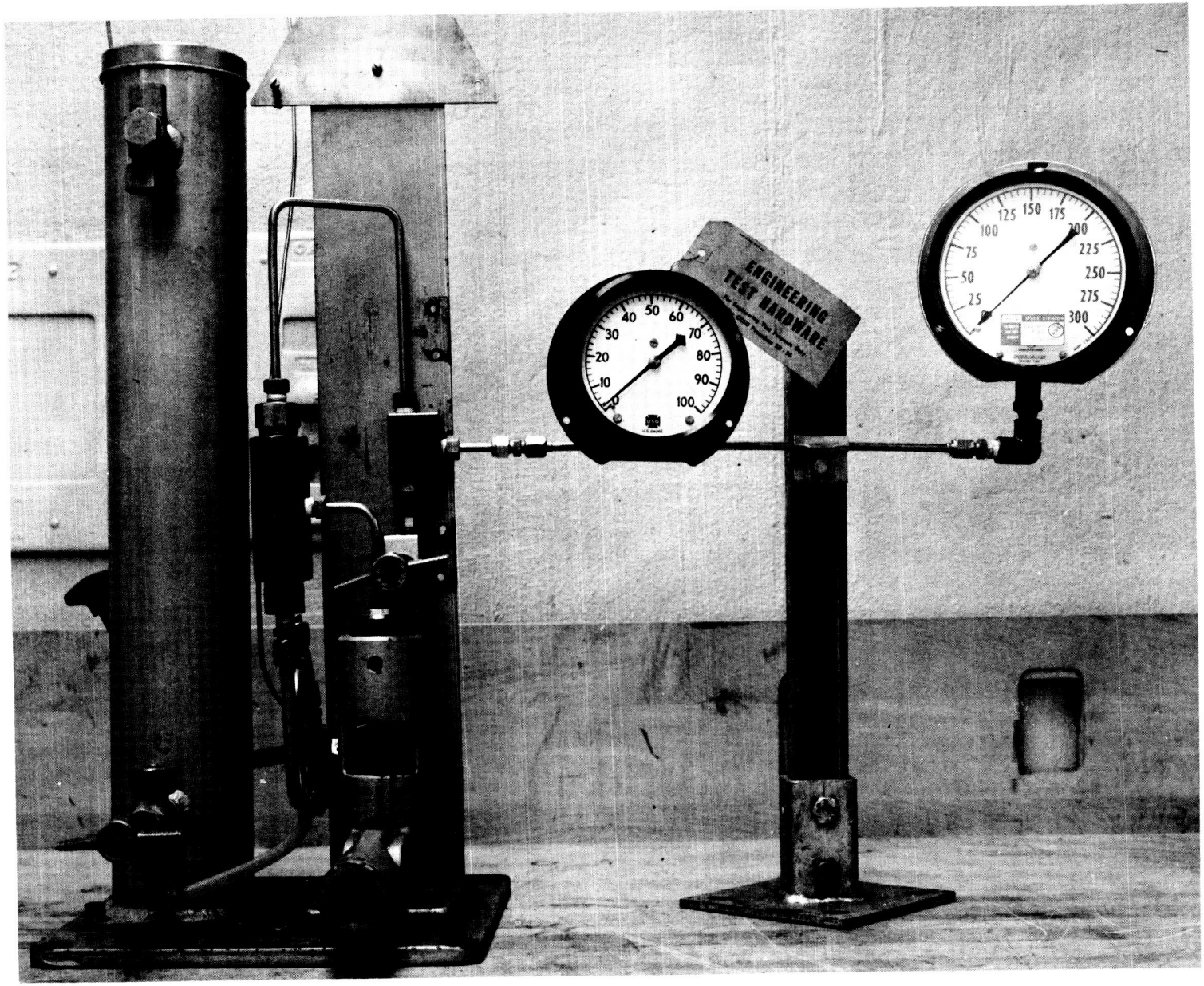

Figure 8-2. Burst Test Setup

APPROVAL

TEST REPORT

FOR

PRESSURE GAUGE, 4-1/2-INCH 0-TO 100-PSIG

U.S. Gauge Company Part Number 5002

NASA Drawing Number 75M04406 PPG-5

SUBMITTED BY

M. R. Watts

M. R. Watts
Test and Evaluation Section

APPROVALS

R. W. Claunch

R. W. Claunch
Program Supervisor

V. J. Vehko

V.J. Vehko, Director
Engineering Department

DISTRIBUTION

Chrysler Corporation Space Division

C. A. Brakebill	Test and Evaluation Section	2
R. W. Claunch	Program Supervisor, CCSD-Michoud	2
W. E. Dempster	Program Manager, CCSD-FO	6
E. J. Dofter	Chief Engineer, Reliability Engineering Branch	1
L. L. Gray	Test and Evaluation Section	5
P. Perani	Manager, Test and Evaluation Section	2
L. T. Scherer, Jr.	Manager, Data Center Section	1
V. J. Vehko	Director, Engineering Department	1

Technical Files	3
Technical Information Centre	1
Technical Writing and Editing Group	1

National Aeronautics and Space Administration

Marshall Space Flight Center	
MS-IP, Bldg. 4200	3
APIC	1
Michoud Assembly Facility	
I-MICH-D	2
John F. Kennedy Space Center	
MD	1
ME (Electrical only)	1
MJ (Electrical only)	1
MG	1
MH	1
ML, Mr. Fedor	1
RC-423	5
Scientific and Technical Information Facility P.O. Box 33 College Park, Maryland 20740	2

GOVERNMENT FIELD PRINTING PLANT
(Under Contract NAS 8-14017)
NASA – MICHOUD ASSEMBLY FACILITY – 1967
NEW ORLEANS, LOUISIANA 70129